SUZUKI

RG413

SERVICE MANUAL
SUPPLEMENTARY SERVICE MANUAL
WIRING DIAGRAM MANUAL

HOW TO FIND APPLICABLE MANUALS

1. Identify the model category which contains the VIN of the vehicle under repair.
   Refer to the “VIN TABLE”
2. Refer to the corresponding service manuals in the Applicable Manual Group column.
   The numbers shown in the column show manual group in the “MANUAL LIST”.
3. Search necessary information in the reverse order of manual group number.

Model Category	Language	Applicable Manual Group (NO. : (1) - (4))	
		Service Manual	Wiring Diagram Manual
Model A IGNIS (RM413) 2003-	**E, F, G, D, B, S**	(1)	(4)
Model B IGNIS (RM415) 2003-	**E, F, G, D, B, S**	(1),(2)	(4)
Model C IGNIS (RM413D) 2003-	**E, F, G, D, B, S**	(1),(2),(3),(5)	(4)

E English **F** French **G** German **D** Dutch **B** Italian **S** Spanish

TOP

MANUAL LIST

Manual Group	Manual Part Name	Language	Manual Part Number
(1)	IGNIS (RM413) Service Manual	E	99500U86G00-01E
		F	99500U86G00-01F
		G	99500U86G00-01G
		D	99500U86G00-01D
		B	99500U86G00-01B
		S	99500U86G00-01S
(2)	IGNIS (RM415/RM413D) Supplementary Service Manual	E	99501U86G10-01E
		F	99501U86G10-01F
		G	99501U86G10-01G
		D	99501U86G10-01D
		B	99501U86G10-01B
		S	99501U86G10-01S
(3)	IGNIS/wagon R+ (RM413D/RB413D) Supplementary Service Manual	E	99501U86G20-01E
		F	99501U86G20-01F
		G	99501U86G20-01G
		D	99501U86G20-01D
		B	99501U86G20-01B
		S	99501U86G20-01S
(4)	IGNIS (RM413/415/413D) Wiring Diagram Manual	E,F,G,D,B,S	99512U86G20-669
(5)	IGNIS/wagon R+ (RM413D/RB413D) Supplementary Service Manual	E	99501U86G30-01E
		F	99501U86G30-01F
		G	99501U86G30-01G
		D	99501U86G30-01D
		B	99501U86G30-01B
		S	99501U86G30-01S

E English **F French** **G German** **D Dutch** **B Italian** **S Spanish**

HOW TO FIND APPLICABLE MANUALS

VIN TABLE

Model A:

The VIN within the range shown in the table are categorized as “Model A”

ⓧ TSMMHY51S00100001 ⓧ ~
ⓧ TSMMHX51S00100001 ⓧ ~

Model B:

The VIN within the range shown in the table are categorized as “Model B”

ⓧ TSMMHY81S00100001 ⓧ ~
ⓧ TSMMHX81S00100001 ⓧ ~

Model C:

The VIN within the range shown in the table are categorized as “Model C”

ⓧ TSMMHX91S00100001 ⓧ ~

SUZUKI RG413

SUZUKI

SUZUKI MOTOR CORPORATION

RG413

SERVICE MANUAL

SERVICE MANUAL 99500-80G00-01E

Ⓓ

SERVICE MANUAL

SUZUKI
Caring for Customers

99500-80G00-01E
（英）

IMPORTANT

WARNING/CAUTION/NOTE

Please read this manual and follow its instructions carefully. To emphasize special information, the words **WARNING, CAUTION** and **NOTE** have special meanings. Pay special attention to the messages highlighted by these signal words.

WARNING:

Indicates a potential hazard that could result in death or injury.

CAUTION:

Indicates a potential hazard that could result in vehicle damage.

NOTE:

Indicates special information to make maintenance easier or instructions clearer.

WARNING:

This service manual is intended for authorized Suzuki dealers and qualified service mechanics only. Inexperienced mechanics or mechanics without the proper tools and equipment may not be able to properly perform the services described in this manual.
Improper repair may result in injury to the mechanic and may render the vehicle unsafe for the driver and passengers.

WARNING:

For vehicles equipped with a Supplemental Restraint (Air Bag) System:

- **Service on and around the air bag system components or wiring must be performed only by an authorized SUZUKI dealer. Refer to "Air Bag System Components and Wiring Location View" under "General Description" in air bag system section in order to confirm whether you are performing service on or near the air bag system components or wiring. Please observe all WARNINGS and "Service Precautions" under "On-Vehicle Service" in air bag system section before performing service on or around the air bag system components or wiring. Failure to follow WARNINGS could result in unintentional activation of the system or could render the system inoperative. Either of these two conditions may result in severe injury.**
- **If the air bag system and another vehicle system both need repair, Suzuki recommends that the air bag system be repaired first, to help avoid unintended air bag system activation.**
- **Do not modify the steering wheel, instrument panel or any other air bag system component (on or around air bag system components or wiring). Modifications can adversely affect air bag system performance and lead to injury.**
- **If the vehicle will be exposed to temperatures over 93°C (200°F) (for example, during a paint baking process), remove the air bag system components (air bag (inflator) modules, SDM and/or seat belt with pretensioner) beforehand to avoid component damage or unintended activation.**

FOREWORD

This manual contains procedures for diagnosis, maintenance, adjustments, minor service operations, replacement of components (Service) and for disassembly and assembly of major components (Unit Repair-Overhaul).

Applicable model: RG413

The contents are classified into sections each of which is given a section number as indicated in the Table of Contents on following page. And on the first page of each individual section is an index of that section.
This manual should be kept in a handy place for ready reference of the service work.
Strict observance of the so specified items will enable one to obtain the full performance of the vehicle.

When replacing parts or servicing by disassembling, it is recommended to use SUZUKI genuine parts, tools and service materials (lubricant, sealants, etc.) as specified in each description.

All information, illustrations and specifications contained in this literature are based on the latest product information available at the time of publication approval. And used as the main subject of description is the vehicle of standard specifications among others.
Therefore, note that illustrations may differ from the vehicle being actually serviced.
The right is reserved to make changes at any time without notice.

Related Manual

Manual Name	Manual No.
RG413 Wiring Diagram Manual	99512-80G00-015

SUZUKI MOTOR CORPORATION
OVERSEAS SERVICE DEPARTMENT

© COPYRIGHT SUZUKI MOTOR CORPORATION 2000

TABLE OF CONTENTS

GENERAL INFORMATION	
General Information	**0A**
Maintenance and Lubrication	**0B**
HEATING AND AIR CONDITIONING	
Heater and Ventilation	**1A**
Air Conditioning	**1B**
STEERING, SUSPENSION, WHEELS AND TIRES	
Steering, Suspension, Wheels and Tires	**3**
Front End Alignment	**3A**
Manual Rack and Pinion	**3B**
Power Steering System	**3B1**
Steering Wheel and Column	**3C**
Front Suspension	**3D**
Rear Suspension	**3E**
Wheels and Tires	**3F**
DRIVE SHAFT AND PROPELLER SHAFT	
Front Drive Shaft	**4A**
Propeller Shaft	**4B**
BRAKE SYSTEM	
Brakes	**5**
Antilock Brake System	**5E**

ENGINE	
General Information and Diagnosis	**6**
Engine Mechanical	**6A1**
Engine Cooling	**6B**
Engine Fuel	**6C**
Engine and Emission Control System	**6E1**
Ignition System	**6F1**
Cranking System	**6G**
Charging System	**6H**
Exhaust System	**6K**
TRANSMISSION, CLUTCH AND DIFFERENTIAL	
Manual Transmission	**7A**
Automatic Transmission	**7B**
Clutch	**7C**
Transfer	**7D**
Differential (Rear)(4WD)	**7F**
ELECTRICAL SYSTEM	
Body Electrical System	**8**
Wiring Diagram	**8A**
Immobilizer Control System (if equipped)	**8G**
BODY SERVICE	**9**
RESTRAINT SYSTEM	
Restraint System	**10**
Air Bag System (if equipped)	**10B**

NOTE:

The screen toned Section 8A is in Wiring Diagram Manual mentioned in FOREWORD of this manual.

SECTION 0A

GENERAL INFORMATION

CONTENTS

HOW TO USE THIS MANUAL 0A-2
PRECAUTIONS 0A-3
PRECAUTION FOR VEHICLES EQUIPPED WITH A SUPPLEMENTAL RESTRAINT (AIR BAG) SYSTEM 0A-3
DIAGNOSIS 0A-3
SERVICING AND HANDLING 0A-4
GENERAL PRECAUTIONS 0A-6
PRECAUTIONS FOR CATALYTIC CONVERTER 0A-9
PRECAUTION FOR INSTALLING MOBILE COMMUNICATION EQUIPMENT 0A-9
PRECAUTION IN SERVICING FULL-TIME 4WD VEHICLE 0A-10
PRECAUTIONS FOR ELECTRICAL CIRCUIT SERVICE 0A-11
ELECTRICAL CIRCUIT INSPECTION PROCEDURE 0A-13
OPEN CIRCUIT CHECK 0A-13
CONTINUITY CHECK 0A-14
VOLTAGE CHECK 0A-15
SHORT CIRCUIT CHECK (WIRE HARNESS TO GROUND) 0A-16
INTERMITTENT AND POOR CONNECTION 0A-16
IDENTIFICATION INFORMATION 0A-18
VEHICLE IDENTIFICATION NUMBER 0A-18
ENGINE IDENTIFICATION NUMBER 0A-18
TRANSMISSION IDENTIFICATION NUMBER 0A-18
WARNING, CAUTION AND INFORMATION LABELS 0A-19
VEHICLE LIFTING POINTS 0A-20
ABBREVIATIONS AND SYMBOLS MAY BE USED IN THIS MANUAL 0A-22
FASTENER INFORMATION 0A-25
METRIC FASTENERS 0A-25
FASTENER STRENGTH IDENTIFICATION 0A-25
STANDARD TIGHTENING TORQUE 0A-25

HOW TO USE THIS MANUAL

1) There is a “TABLE OF CONTENTS” on the third page of this manual, whereby you can easily find the section that offers the information you need. Also, there is a CONTENTS on the first page of each section, where the main items in that section are listed.
2) Each section of this manual has its own pagination. It is indicated at the top of each page along with the Section name.
3) The special tool usage and torque specification are given as shown in the figure.

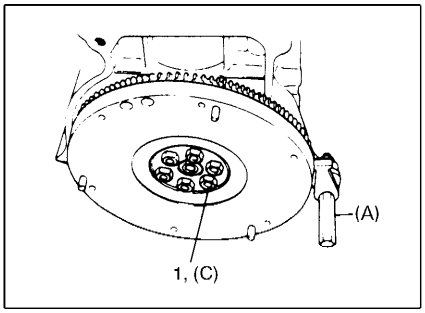

6) Install oil pump. Refer to “Oil pump” in this section.
7) Install flywheel (for M/T vehicle) or drive plate (for A/T vehicle). Using special tool, lock flywheel or drive plate, and tighten flywheel or drive plate bolts (1) to specified torque.

Special Tool
(A) : 09924-17810

Tightening Torque
(c) : 78 N·m (7.8 kg-m, 56.0 lb-ft)

4) A number of abbreviations and symbols are used in the text.For their full explanations, refer to “ABBREVIATIONS AND SYMBOLS MAY BE USED IN THIS MANUAL” in this section.
5) The SI, metric and foot-pound systems are used as units in this manual.
6) “DIAGNOSIS” are included in each section as necessary.
7) At the end of each section, there are descriptions of “SPECIAL TOOL”, “REQUIRED SERVICE MATERIAL” and “TIGHTENING TORQUE SPECIFICATION” that should be used for the servicing work described in that section.

PRECAUTIONS

PRECAUTION FOR VEHICLES EQUIPPED WITH A SUPPLEMENTAL RESTRAINT (AIR BAG) SYSTEM

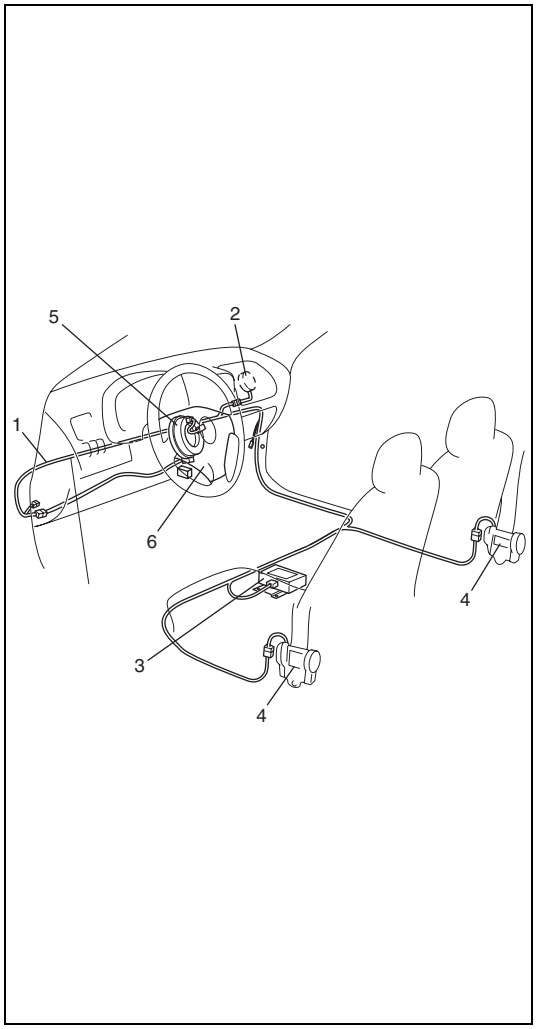

WARNING:

- **The configuration of air bag system parts are as shown in the figure. When it is necessary to service (remove, reinstall and inspect) these parts, be sure to follow procedures described in SECTION 10B. Failure to follow proper procedures could result in possible air bag system activation, personal injury, damage to parts or air bag system being unable to activate when necessary.**
- **If the air bag system and another vehicle system both need repair, SUZUKI recommends that the air bag system be repaired first, to help avoid unintended air bag system activation.**
- **Do not modify the steering wheel, dashboard, or any other air bag system components. Modifications can adversely affect air bag system performance and lead to injury.**
- **If the vehicle will be exposed to temperatures over 93°C (200°F) (for example, during a paint baking process), remove the air bag system components beforehand to avoid component damage or unintended air bag system activation.**

1. Air bag wire harness	4. Seat belt pretensioner
2. Passenger air bag (inflator) module	5. Contact coil
3. SDM	6. Driver air bag (inflator) module

DIAGNOSIS

- When troubleshooting air bag system, be sure to follow “DIAGNOSIS” in SECTION 10B. Bypassing these procedures may result in extended diagnostic time, incorrect diagnosis, and incorrect parts replacement.
- Never use electrical test equipment other than that specified in this manual.

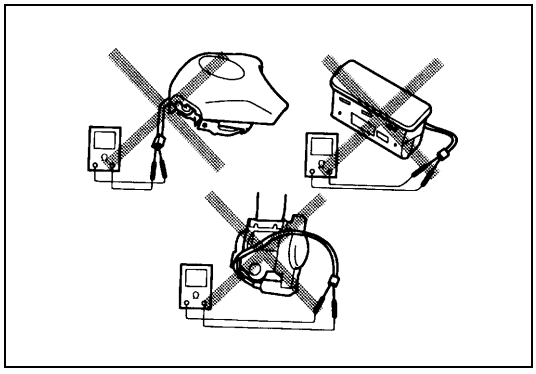

WARNING:

Never attempt to measure the resistance of the air bag (inflator) modules (driver and passenger) and seat belt pretensioners (driver and passenger). It is very dangerous as the electric current from the tester may deploy the air bag or activate the pretensioner.

SERVICING AND HANDLING

[A]

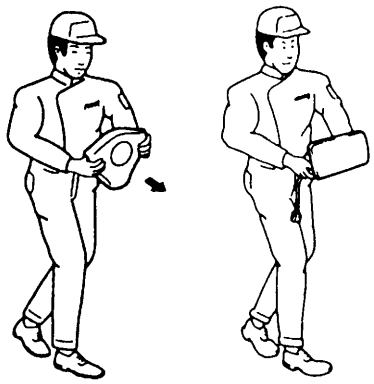

[B]

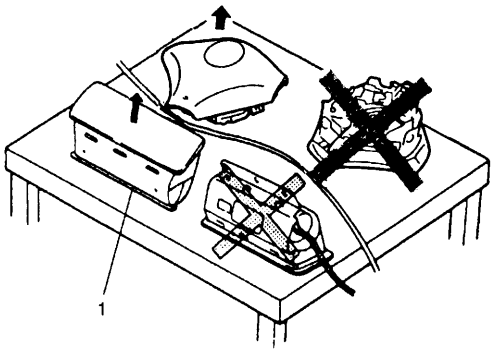

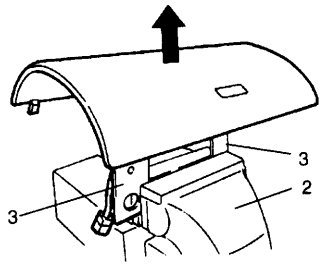

WARNING:

Many of service procedures require disconnection of "AIR BAG" fuse and all air bag (inflator) module(s) from initiator circuit to avoid an accidental deployment.

Driver and Passenger Air Bag (Inflator) Modules

- **For handling and storage of a live air bag (inflator) module, select a place where the ambient temperature below 65°C (150°F), without high humidity and away from electric noise.**
- **When carrying a live air bag (inflator) module, make sure the bag opening is pointed away from you. In case of an accidental deployment, the bag will then deploy with minimal chance of injury. Never carry the air bag (inflator) module by the wires or connector on the underside of the module. When placing a live air bag (inflator) module on a bench or other surface, always face the bag up, away from the surface. As the live passenger air bag (inflator) module must be placed with its bag (trim cover) facing up, place it on the workbench with a slit or use the workbench vise to hold it securely at its lower mounting bracket. This is necessary so that a free space is provided to allow the air bag to expand in the unlikely event of accidental deployment. Otherwise, personal injury may result.**
- **Never dispose of live (undeployed) air bag (inflator) modules (driver and passenger). If disposal is necessary, be sure to deploy them according to deployment procedures described in SECTION 10B before disposal.**
- **The air bag (inflator) module immediately after deployment is very hot. Wait for at least half an hour to cool it off before proceeding the work.**
- **After an air bag (inflator) module has been deployed, the surface of the air bag may contain a powdery residue. This powder consists primarily of cornstarch (used to lubricate the bag as it inflates) and by-products of the chemical reaction. As with many service procedures, gloves and safety glasses should be worn.**

[A] :	ALWAYS CARRY AIR BAG (INFLATOR) MODULE WITH TRIM COVER (AIR BAG OPENING) AWAY FROM BODY.
[B] :	ALWAYS PLACE AIR BAG (INFLATOR) MODULE ON WORKBENCH WITH TRIM COVER (AIR BAG OPENING) UP, AWAY FROM LOOSE OBJECTS.
1.	Slit on workbench
2.	Workbench vise
3.	Lower mounting bracket

WARNING:

SDM

- **For handling and storage of a SDM, select a place where the ambient temperature below 65°C (150°F), without high humidity and away from electric noise.**
- **During service procedures, be very careful when handling a Sensing and Diagnostic Module (SDM). Never strike or jar the SDM.**
- **Never power up the air bag system when the SDM is not rigidly attached to the vehicle. All SDM and mounting bracket fasteners must be carefully torqued and the arrow must be pointing toward the front of the vehicle to ensure proper operation of the air bag system.**
  The SDM could be activated when powered while not rigidly attached to the vehicle which could cause deployment and result in personal injury.

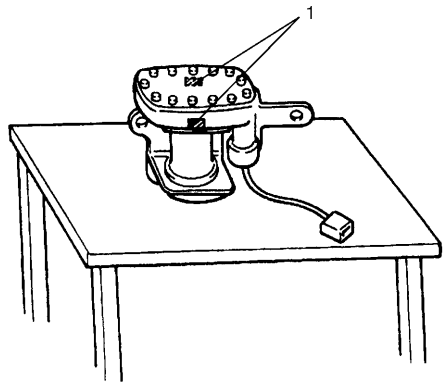

WARNING:

Driver and Passenger Seat Belt Pretensioners
(If equipped)

- **For handling and storage of a live seat belt pretensioner, select a place where the ambient temperature below 65°C (150°F), without high humidity and away from electric noise.**
- **Never carry seat belt pretensioner by wire or connector of pretensioner. When placing a live seat belt pretensioner on the workbench or some place like that, be sure not to lay it with its exhaust hole (1) provided side facing down. It is also prohibited to put something on its face with an exhaust hole or to put a seat belt pretensioner on top of another. Otherwise, personal injury may result.**
- **Never dispose of live (inactivated) seat belt pretensioners (drive and passenger). If disposal is necessary, be sure to activate them according to activation procedures described in SECTION 10B before disposal.**
- **The seat belt pretensioner immediately after activation is very hot. Wait for at least half an hour to cool it off before proceeding the work.**
- **With many service procedures, gloves and safety glasses should be worn to prevent any possible irritation of the skin or eyes.**

- **Even when the accident was light enough not to cause air bags to activate, be sure to inspect system parts and other related parts according to instructions under "REPAIR AND INSPECTION REQUIRED AFTER AN ACCIDENT" in SECTION 10B.**
- **When servicing parts other than air bag system, if shocks may be applied to air bag system component parts, remove those parts beforehand.**
- **When handling the air bag (inflator) modules (driver and passenger), seat belt pretensioners (driver and passenger) or SDM, be careful not to drop it or apply an impact to it. If an excessive impact was applied, never attempt disassembly or repair but replace it with a new one.**
- **When grease, cleaning agent, oil, water, etc. has got onto air bag (inflator) modules (driver and passenger) or seat belt pretensioners (drive and passenger), wipe off immediately with a dry cloth.**

- **Air bag wire harness can be identified easily as it is covered with a yellow protection tube. Be very careful when handling it.**
- **When an open in air bag wire harness, damaged wire harness, connector or terminal is found, replace wire harness, connectors and terminals as an assembly.**
- **Do not apply power to the air bag system unless all components are connected or a diagnostic chart requests it, as this will set a diagnostic trouble code.**
- **Never use air bag system component parts from another vehicle.**
- **When using electric welding, be sure to temporarily disable air bag system referring to "DISABLING AIR BAG SYSTEM" in Section 10B.**
- **Never expose air bag system component parts directly to hot air (drying or baking the vehicle after painting) or flames.**
- **WARNING/CAUTION labels are attached on each part of air bag system components. Be sure to follow the instructions.**
- **After vehicle is completely repaired, perform "AIR BAG DIAGNOSTIC SYSTEM CHECK" in SECTION 10B.**

GENERAL PRECAUTIONS

The WARNING and CAUTION below describe some general precautions that you should observe when servicing a vehicle. These general precautions apply to many of the service procedures described in this manual, and they will not necessarily be repeated with each procedure to which they apply.

WARNING:

- **Whenever raising a vehicle for service, be sure to follow the instructions under "VEHICLE LIFTING POINTS" in this section.**
- **When it is necessary to do service work with the engine running, make sure that the parking brake is set fully and the transmission is in Neutral (for manual transmission vehicles) or Park (for automatic transmission vehicles), Keep hands, hair, clothing, tools, etc. away from the fan and belts when the engine is running.**
- **When it is necessary to run the engine indoors, make sure that the exhaust gas is forced outdoors.**
- **Do not perform service work in areas where combustible materials can come in contact with a hot exhaust system. When working with toxic or flammable materials (such as gasoline and refrigerant), make sure that the area you work in is well-ventilated.**
- **To avoid getting burned, keep away from hot metal parts such as the radiator, exhaust manifold, tail pipe, muffler, etc.**
- **New and used engine oil can be hazardous. Children and pets may be harmed by swallowing new or used oil. Keep new and used oil and used engine oil filters away from children and pets.**
  Continuous contact with used engine oil has been found to cause [skin] cancer in laboratory animals. Brief contact with used oil may irritate skin. To minimize your exposure to used engine oil, wear a long-sleeve shirt and moisture-proof gloves (such as dish washing gloves) when changing engine oil. If engine oil contacts your skin, wash thoroughly with soap and water. Launder any clothing or rags if wet with oil, recycle or properly dispose of used oil and filters.
- **Make sure the bonnet is fully closed and latched before driving. If it is not, it can fly up unexpectedly during driving, obstructing your view and resulting in an accident.**

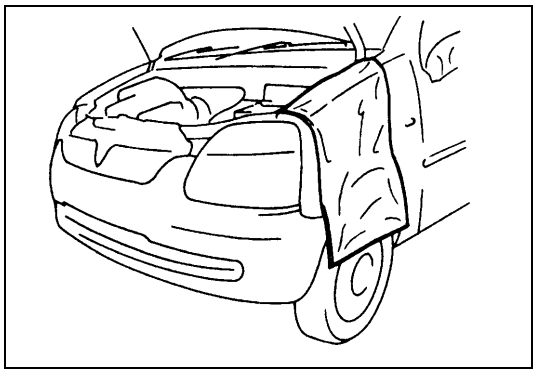

- **Before starting any service work, cover fenders, seats and any other parts that are likely to get scratched or stained during servicing. Also, be aware that what you wear (e.g, buttons) may cause damage to the vehicle's finish.**

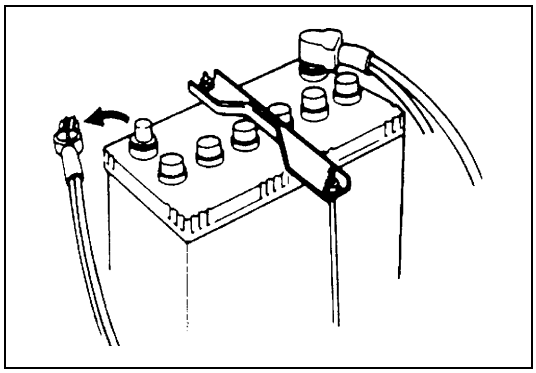

- **When performing service to electrical parts that does not require use of battery power, disconnect the negative cable of the battery.**

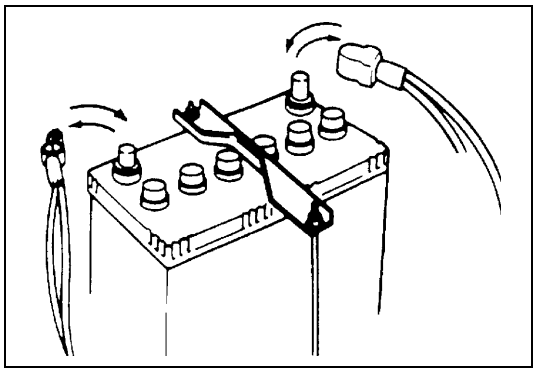

- **When removing the battery, be sure to disconnect the negative cable first and then the positive cable. When reconnecting the battery, connect the positive cable first and then the negative cable, and replace the terminal cover.**

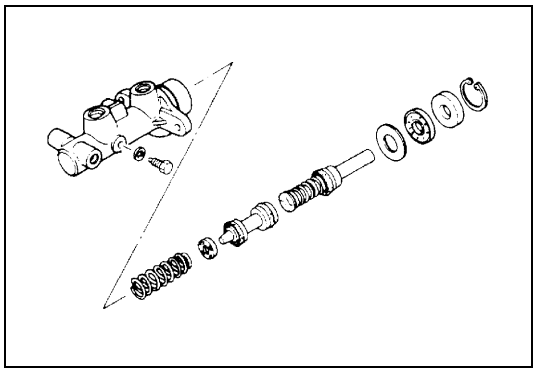

- **When removing parts that are to be reused, be sure to keep them arranged in an orderly manner so that they may be reinstalled in the proper order and position.**

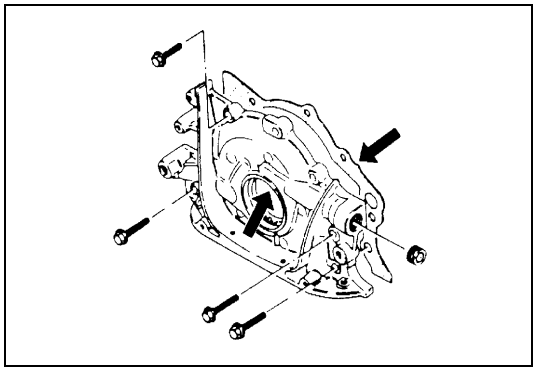

- **Whenever you use oil seals, gaskets, packing, O-rings, locking washers, split pins, self-locking nuts, and certain other parts as specified, be sure to use new ones. Also, before installing new gaskets, packing, etc., be sure to remove any residual material from the mating surfaces.**

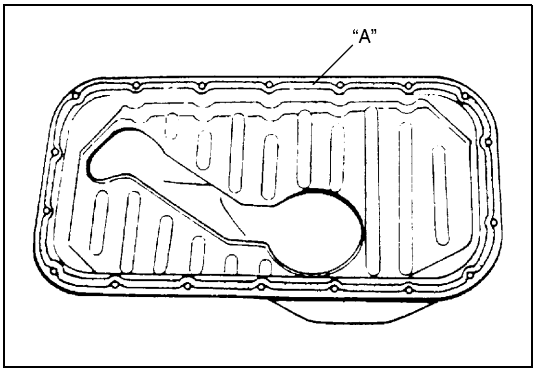

- **Make sure that all parts used in reassembly are perfectly clean.**
  When use of a certain type of lubricant, bond or sealant is specified, be sure to use the specified type.

"A" : Sealant 99000-31150

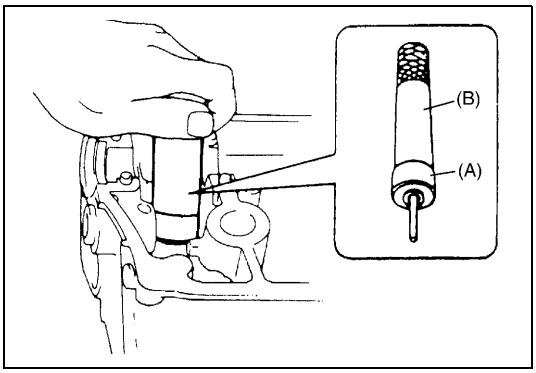

- **Be sure to use special tools when instructed.**

Special Tool
(A) : 09917-98221
(B) : 09916-58210

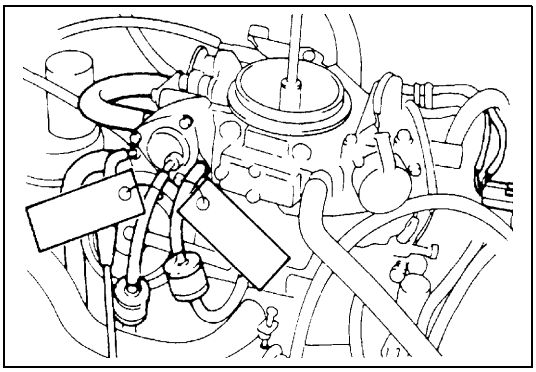

- **When disconnecting vacuum hoses, attach a tag describing the correct installation positions so that the hoses can be reinstalled correctly.**

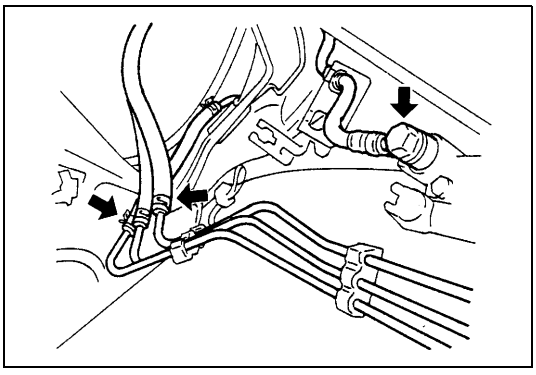

- **After servicing fuel, oil, coolant, vacuum, exhaust or brake systems, check all lines related to the system for leaks.**
- **For vehicles equipped with fuel injection systems, never disconnect the fuel line between the fuel pump and injector without first releasing the fuel pressure, or fuel can be sprayed out under pressure.**

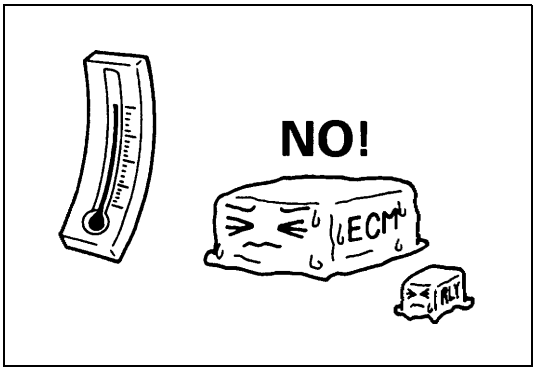

- **When performing a work that produces a heat exceeding 80°C (176°F) in the vicinity of the electrical parts, remove the heat sensitive electrical part(s) beforehand.**

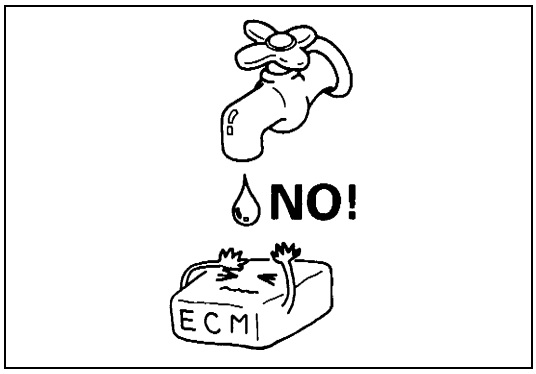

- **Use care not to expose connectors and electrical parts to water which will be a cause of a trouble.**

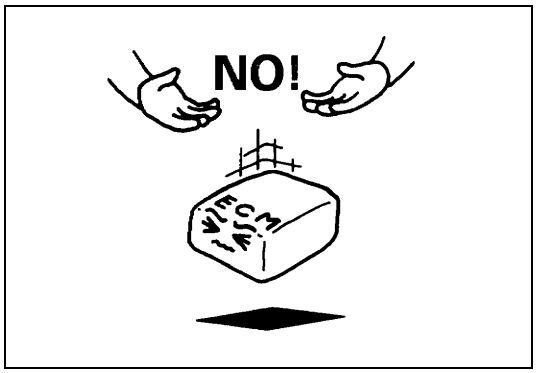

- **Always be careful not to handle electrical parts (computer, relay, etc.) in a rough manner or drop them.**

PRECAUTIONS FOR CATALYTIC CONVERTER

For vehicles equipped with a catalytic converter, use only unleaded gasoline and be careful not to let a large amount of unburned gasoline enter the converter or it can be damaged.

- **Conduct a spark jump test only when necessary, make it as short as possible, and do not open the throttle.**
- **Conduct engine compression checks within the shortest possible time.**
- **Avoid situations which can result in engine misfire (e.g. starting the engine when the fuel tank is nearly empty.)**

PRECAUTION FOR INSTALLING MOBILE COMMUNICATION EQUIPMENT

When installing mobile communication equipment such as CB (Citizens-Band)-radio or cellular-telephone, be sure to observe the following precautions.
Failure to follow cautions may adversely affect electronic control system.

- **Keep the antenna as far away as possible from the vehicle's electronic control unit.**
- **Keep the antenna feeder more than 20 cm (7.9 in) away from electronic control unit and its wire harnesses.**
- **Do not run the antenna feeder parallel with other wire harnesses.**
- **Confirm that the antenna and feeder are correctly adjusted.**

PRECAUTION IN SERVICING FULL-TIME 4WD VEHICLE

This full-time 4WD vehicle can not be converted to 2WD manually.
Observe the following caution in servicing. Otherwise, front wheels drive rear wheels or vise-versa and vehicle accidents, drivetrain damage and personal injury may result.

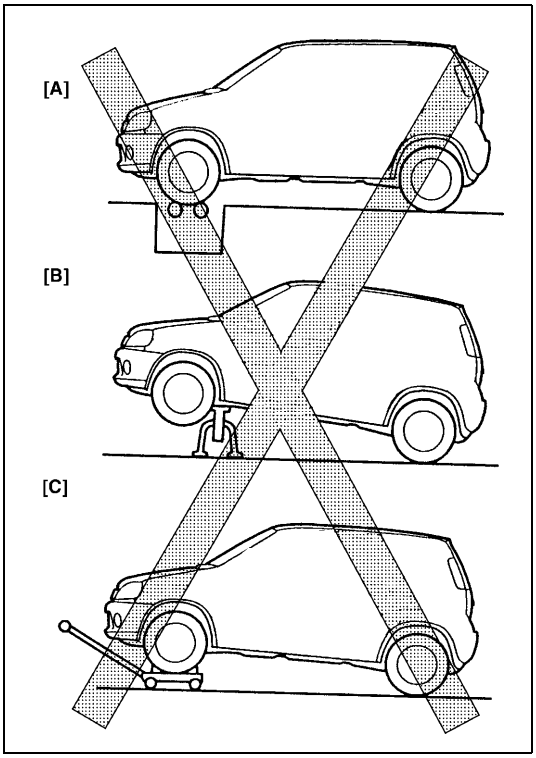

- **Never perform any of the following types of service work.**
  [A] : Testing with 2-wheel chassis dynamometer, speedometer tester or brake tester.
  [B] : Driving front wheels, which are jacked up.
  [C] : Towing under the condition where either front or rear wheels can not rotate.
- **When testing with 2-wheel chassis dynamometer, speedometer tester or brake tester, be sure to make the vehicle as front wheel drive by removing propeller shaft.**

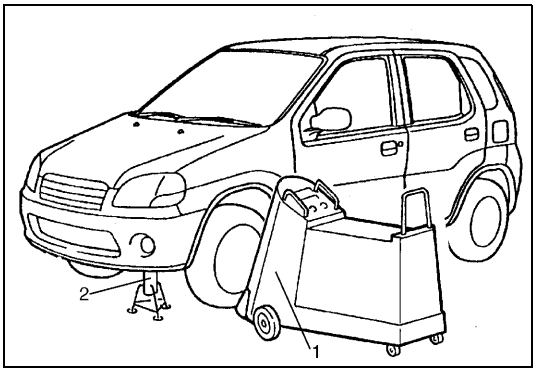

- **When using On-vehicle type wheel balancing equipment (1), be sure to jack up all four wheels, off the ground completely and support vehicle with safety stands (2).**
  Be careful of the other wheels, which will rotate at the same time.

- **This vehicle should be towed under one of the following conditions :**
  - **With all wheels on a flatbed truck.**
  - **With front or rear wheels lifted and a dolly under the other wheels.**

PRECAUTIONS FOR ELECTRICAL CIRCUIT SERVICE

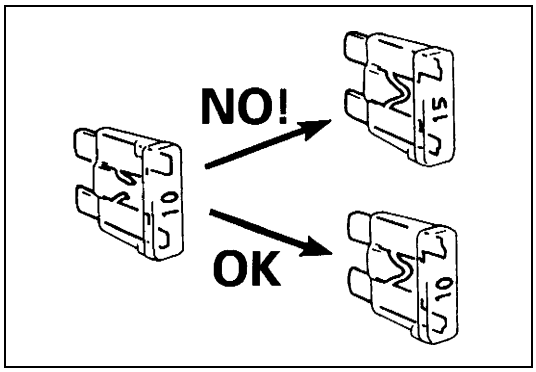

- **When replacing a fuse, make sure to use a fuse of the specified capacity. Use of a fuse with a larger capacity will cause a damage to the electrical parts and a fire.**

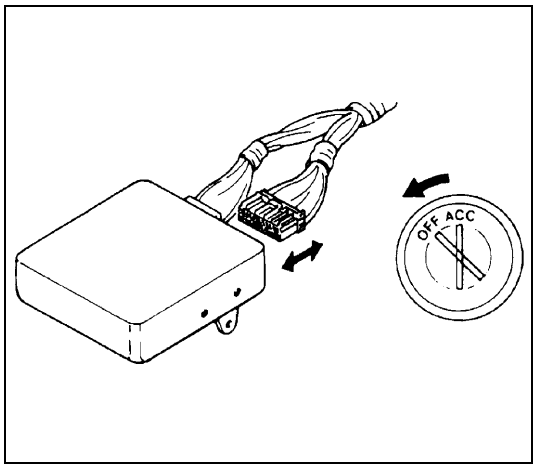

- **When disconnecting and connecting coupler, make sure to turn ignition switch OFF, or electronic parts may get damaged.**

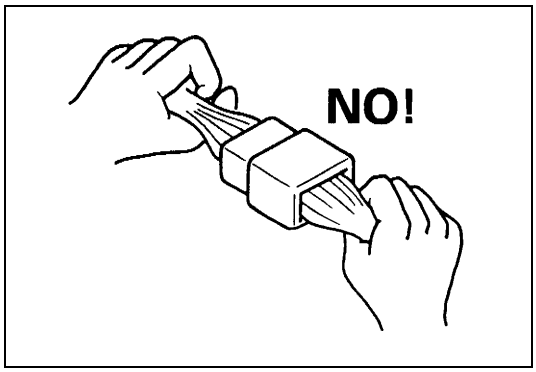

- **When disconnecting connectors, never pull the wiring harness. Unlock the connector lock first and then pull them apart by holding connectors themselves.**

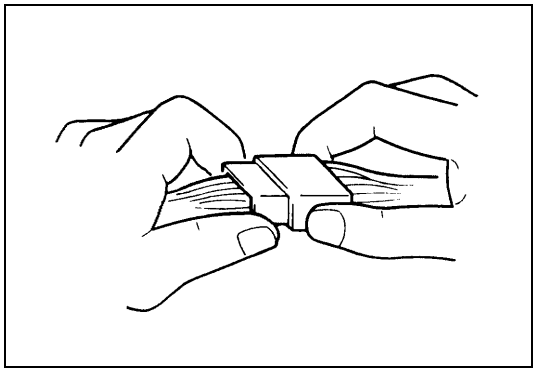

- **When connecting connectors, also hold connectors and put them together until they lock securely (a click is heard).**

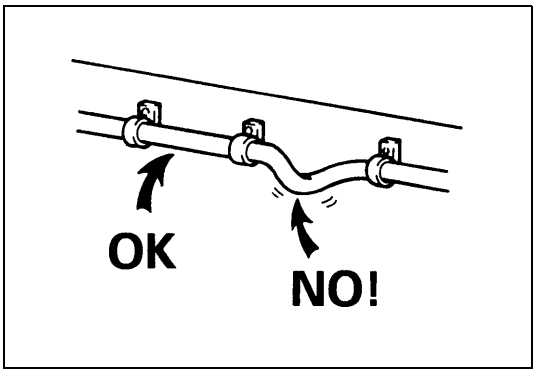

- **When installing the wiring harness, fix it with clamps so that no slack is left.**

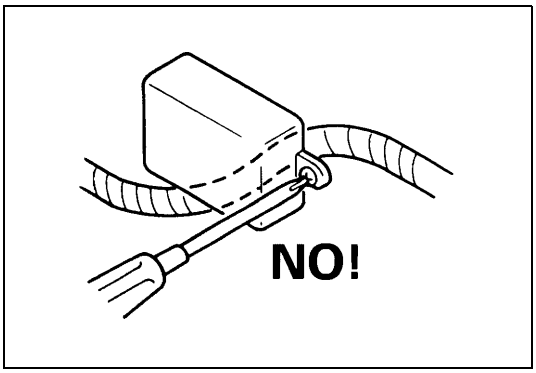

- **When installing vehicle parts, be careful so that the wiring harness is not interfered with or caught by any other part.**

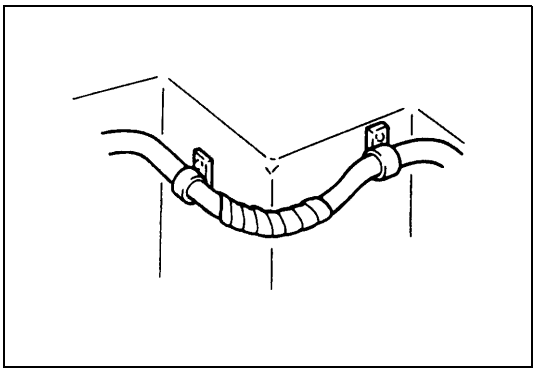

- **To avoid damage to the harness, protect its part which may contact against a part forming a sharp angle by winding tape or the like around it.**

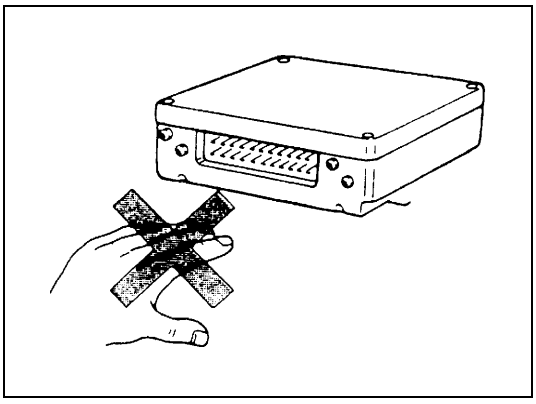

- **Be careful not to touch the electrical terminals of parts which use microcomputers (e.g. electronic control unit like as ECM, PCM, P/S controller, etc). The static electricity from your body can damage these parts.**
- **Never connect any tester (voltmeter, ohmmeter, or whatever) to electronic control unit when its coupler is disconnected. Attempt to do it may cause damage to it.**
- **Never connect an ohmmeter to electronic control unit with its coupler connected to it. Attempt to do it may cause damage to electronic control unit and sensors.**

- **Be sure to use a specified voltmeter/ohmmeter. Otherwise, accurate measurements may not be obtained or personal injury may result. If not specified, use a voltmeter with high impedance (M Ω/V minimum) or a digital type voltmeter.**

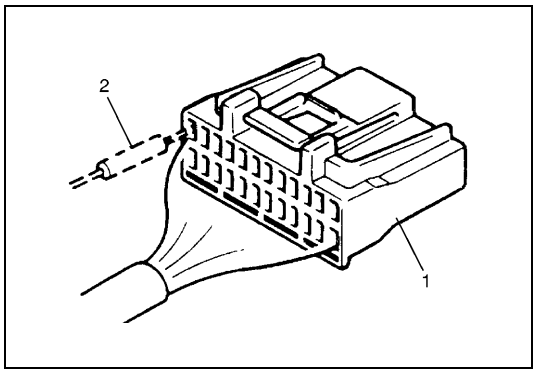

- **When taking measurements at electrical connectors using a tester probe, be sure to insert the probe (2) from the wire harness side (backside) of the connector (1).**

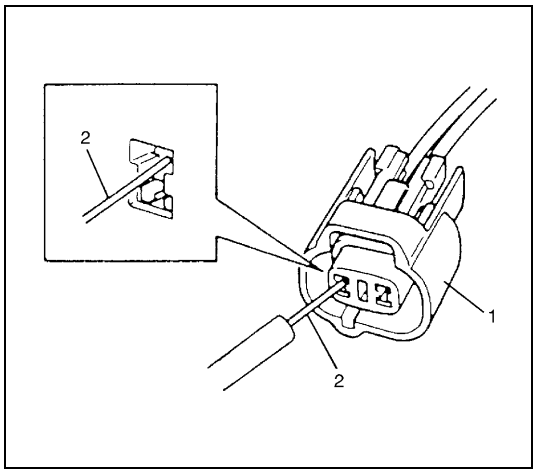

- **When connecting meter probe (2) from terminal side of coupler (1) because it can't be connected from harness side, use extra care not to bend male terminal of coupler of force its female terminal open for connection.**
  In case of such coupler as shown connect probe as shown to avoid opening female terminal.
  Never connect probe where male terminal is supposed to fit.
- **When checking connection of terminals, check its male half for bend and female half for excessive opening and both for locking (looseness), corrosion, dust, etc.**

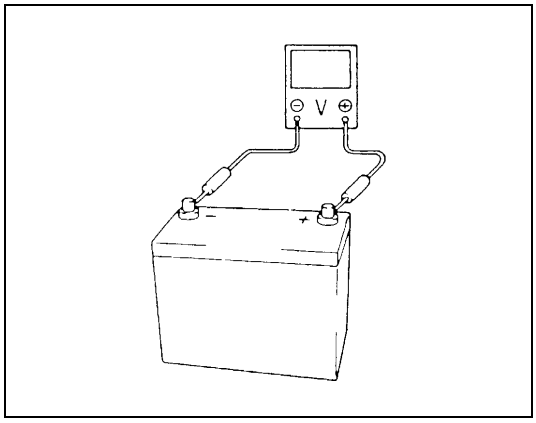

- **Before measuring voltage at each terminal, check to make sure that battery voltage is 11 V or higher. Such terminal voltage check at low battery voltage will lead to erroneous diagnosis.**

ELECTRICAL CIRCUIT INSPECTION PROCEDURE

While there are various electrical circuit inspection methods, described here is a general method to check its open and short circuit by using an ohmmeter and a voltmeter.

OPEN CIRCUIT CHECK

Possible causes for the open circuit are as follows. As the cause is in the connector or terminal in many cases, they need to be checked particularly carefully.

- Loose connection of connector
- Poor contact of terminal (due to dirt, corrosion or rust on it, poor contact tension, entry of foreign object etc.)
- Wire harness being open

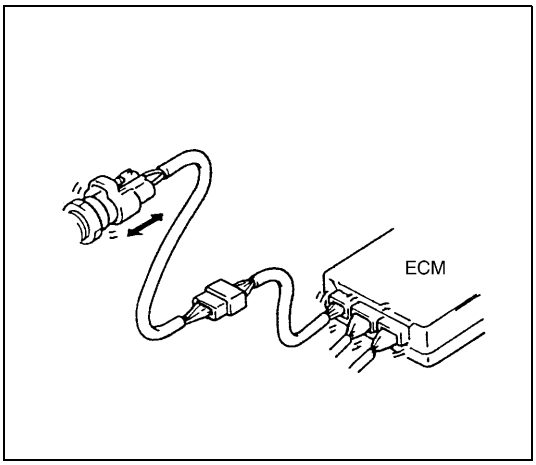

When checking system circuits including an electronic control unit such as ECM, TCM, ABS control module, etc., it is important to perform careful check, starting with items which are easier to check.

1) Disconnect negative (–) cable from battery
2) Check each connector at both ends of the circuit being checked for loose connection. Also check lock condition of connector if equipped with connector lock.

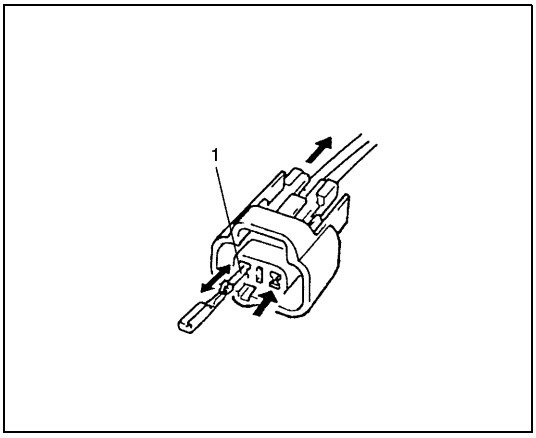

3) Using a test male terminal, check both terminals of the circuit being checked for contact tension of its female terminal.
   Check each terminal visually for poor contact (possibly caused by dirt, corrosion, rust entry of foreign object, etc.).
   At the same time, check to make sure that each terminal is locked in the connector fully.

1. Check contact tension by inserting and removing just for once.

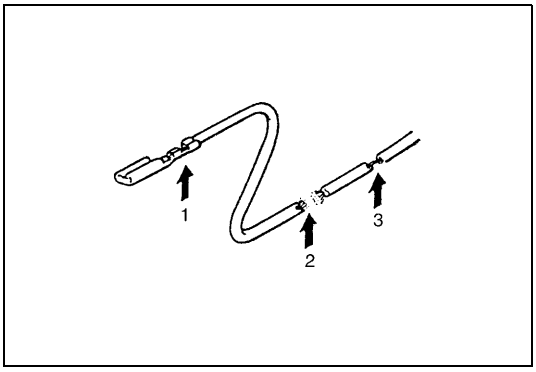

4) Using continuity check or voltage check the following procedure, check the wire harness for open circuit and poor connection with its terminals. Locate abnormality, if any.

1. Looseness of crimping
2. Open
3. Thin wire (single strand of wire)

CONTINUITY CHECK

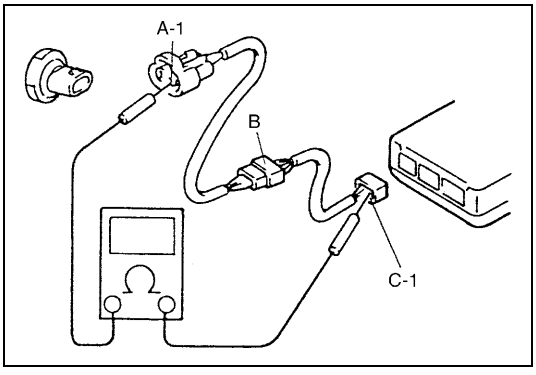

1) Measure resistance between connector terminals at both ends of the circuit being checked (between A-1 and C-1 in the figure). If no continuity is indicated (infinity or over limit), that means that the circuit is open between terminals A-1 and C-1.

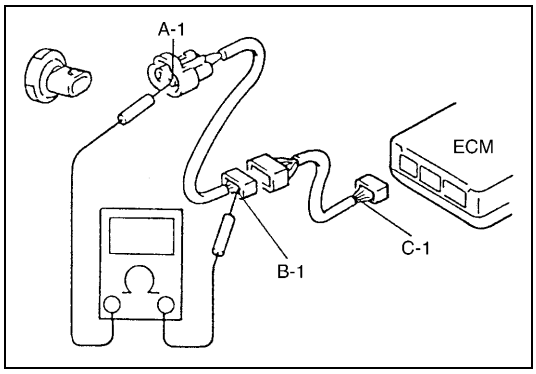

2) Disconnect the connector included in the circuit (connector-B in the figure) and measure resistance between terminals A-1 and B-1.
   If no continuity is indicated, that means that the circuit is open between terminals A-1 and B-1. If continuity is indicated, there is an open circuit between terminals B-1 and C-1 or an abnormality in connector-B.

VOLTAGE CHECK

If voltage is supplied to the circuit being checked, voltage check can be used as circuit check.

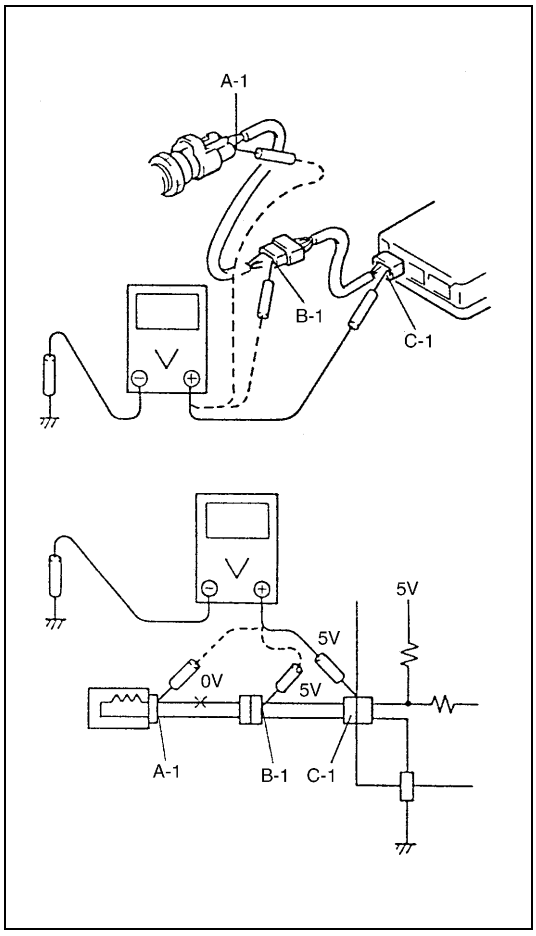

1) With all connectors connected and voltage applied to the circuit being checked, measure voltage between each terminal and body ground.
   a) If measurements were taken as shown in the figure and results were as listed below, it means that the circuit is open between terminals B-1 and A-1.

Voltage between
C-1 and body ground : Approx. 5 V
B-1 and body ground : Approx. 5 V
A-1 and body ground : 0 V

   b) Also, if measured values were as listed below, it means that there is a resistance (abnormality) of such level that corresponds to the voltage drop in the circuit between terminals A-1 and B-1.

Voltage between
C-1 and body ground : Approx. 5 V
B-1 and body ground : Approx. 5 V
A-1 and body ground : Approx. 3 V

SHORT CIRCUIT CHECK (WIRE HARNESS TO GROUND)

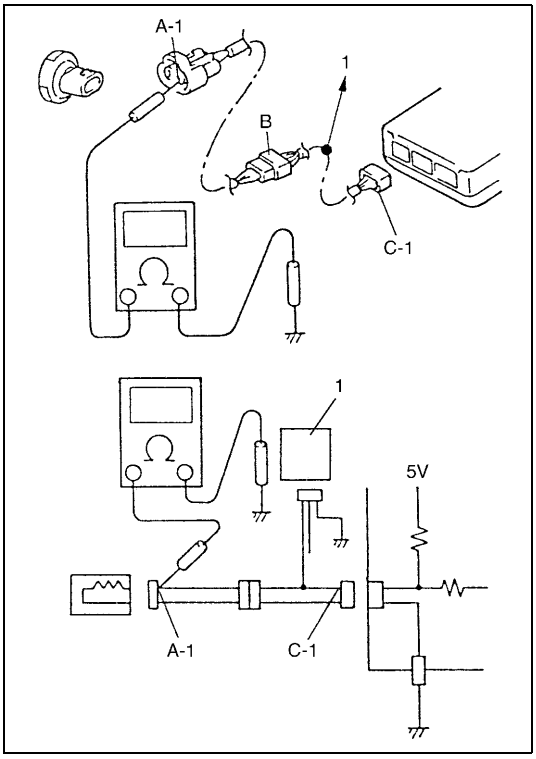

1) Disconnect negative (–) cable at battery.
2) Disconnect connectors at both ends of the circuit to be checked.

NOTE:
If the circuit to be checked is connected to other parts (1), disconnect all connectors of those parts. Otherwise, diagnosis will be misled.

3) Measure resistance between terminal at one end of circuit (A-1 terminal in the figure) and body ground. If continuity is indicated, it means that there is a short to ground between terminals A-1 and C-1 of the circuit.

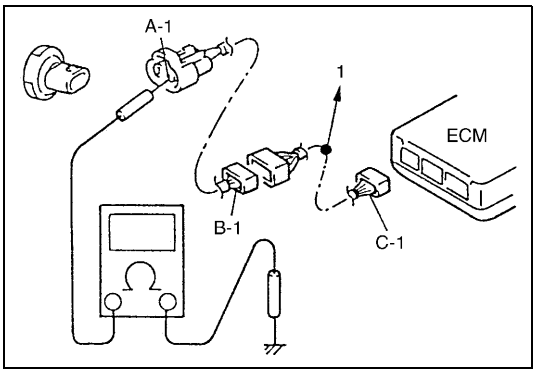

4) Disconnect the connector included in circuit (connector B) and measure resistance between A-1 and body ground.
If continuity is indicated, it means that the circuit is shorted to the ground between terminals A-1 and B-1.

1. To other parts

INTERMITTENT AND POOR CONNECTION

Most intermittent are caused by faulty electrical connections or wiring, although a sticking relay or solenoid can occasionally be at fault. When checking it for proper connection, perform careful check of suspect circuits for :

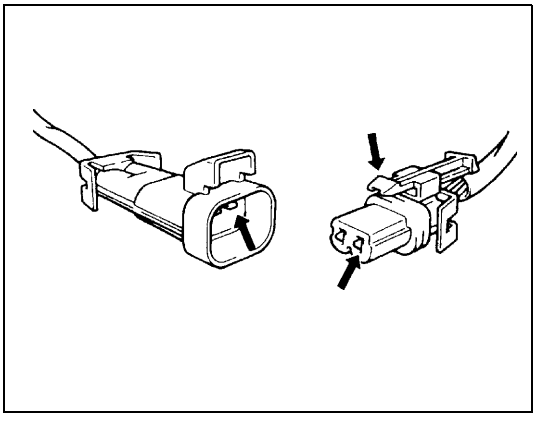

- Poor mating of connector halves, or terminals not fully seated in the connector body (backed out).
- Dirt or corrosion on the terminals. The terminals must be clean and free of any foreign material which could impede proper terminal contact. However, cleaning the terminal with a sand paper or the like is prohibited.
- Damaged connector body, exposing the terminals to moisture and dirt, as well as not maintaining proper terminal orientation with the component or mating connector.

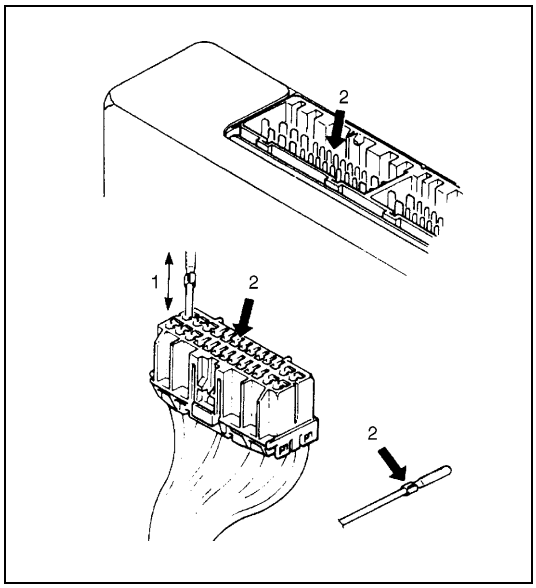

- Improperly formed or damaged terminals.
  Check each connector terminal in problem circuits carefully to ensure good contact tension by using the corresponding mating terminal.
  If contact tension is not enough, reform it to increase contact tension or replace.

1. Check contact tension by inserting and removing just once.
2. Check each terminal for bend and proper alignment.

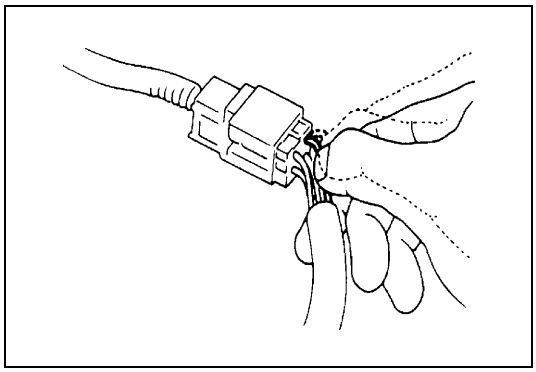

- Poor terminal-to-wire connection.
  Check each wire harness in problem circuits for poor connection by shaking it by hand lightly. If any abnormal condition is found, repair or replace.

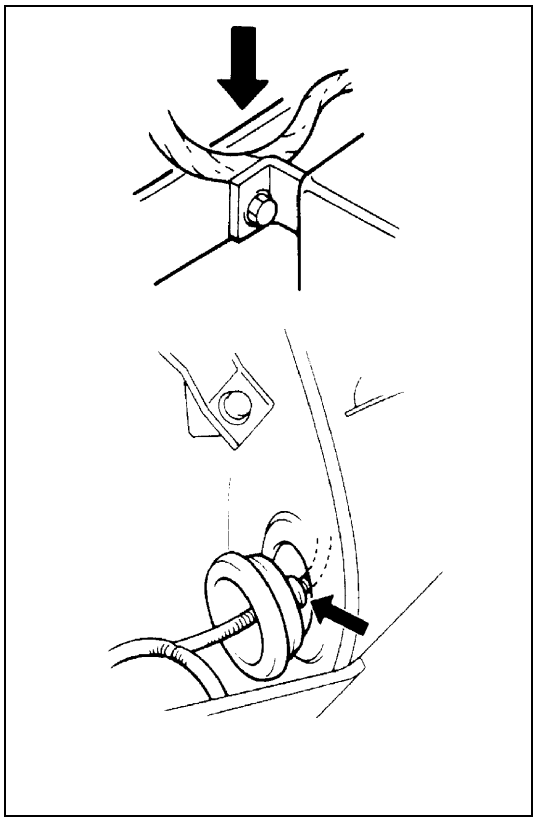

- Wire insulation which is rubbed through, causing an intermittent short as the bare area touches other wiring or parts of the vehicle.
- Wiring broken inside the insulation. This condition could cause continuity check to show a good circuit, but if only 1 or 2 strands of a multi-strand-type wire are intact, resistance could be far too high.
  If any abnormality is found, repair or replace.

IDENTIFICATION INFORMATION

VEHICLE IDENTIFICATION NUMBER

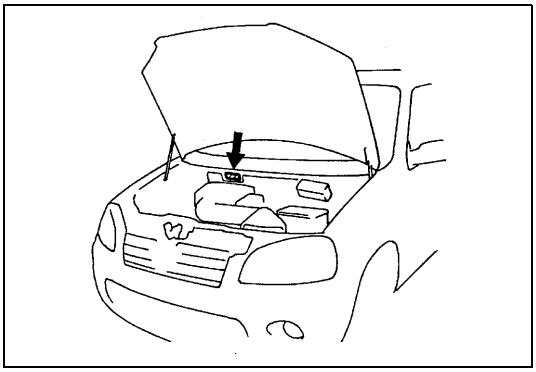

The number is punched on front dash panel in engine room.

ENGINE IDENTIFICATION NUMBER

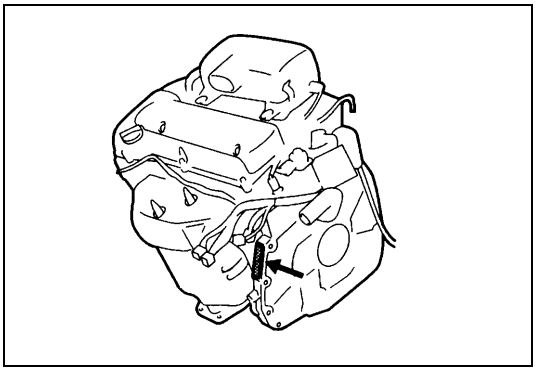

The number is punched on cylinder block.

TRANSMISSION IDENTIFICATION NUMBER

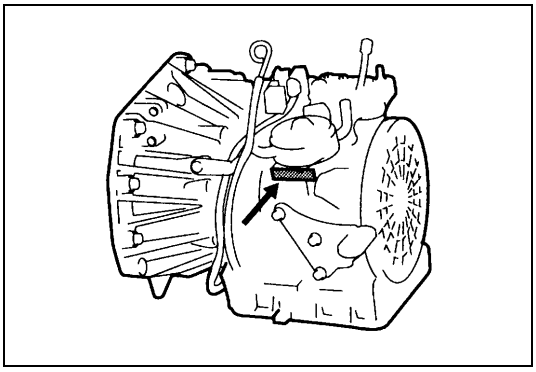

The automatic transmission identification number is located on transmission case.

WARNING, CAUTION AND INFORMATION LABELS

The figure below shows main labels among others that are attached to vehicle component parts.
When servicing and handling parts, refer to WARNING/CAUTION instructions printed on labels.
If any WARNING/CAUTION label is found stained or damaged, clean or replace it as necessary.

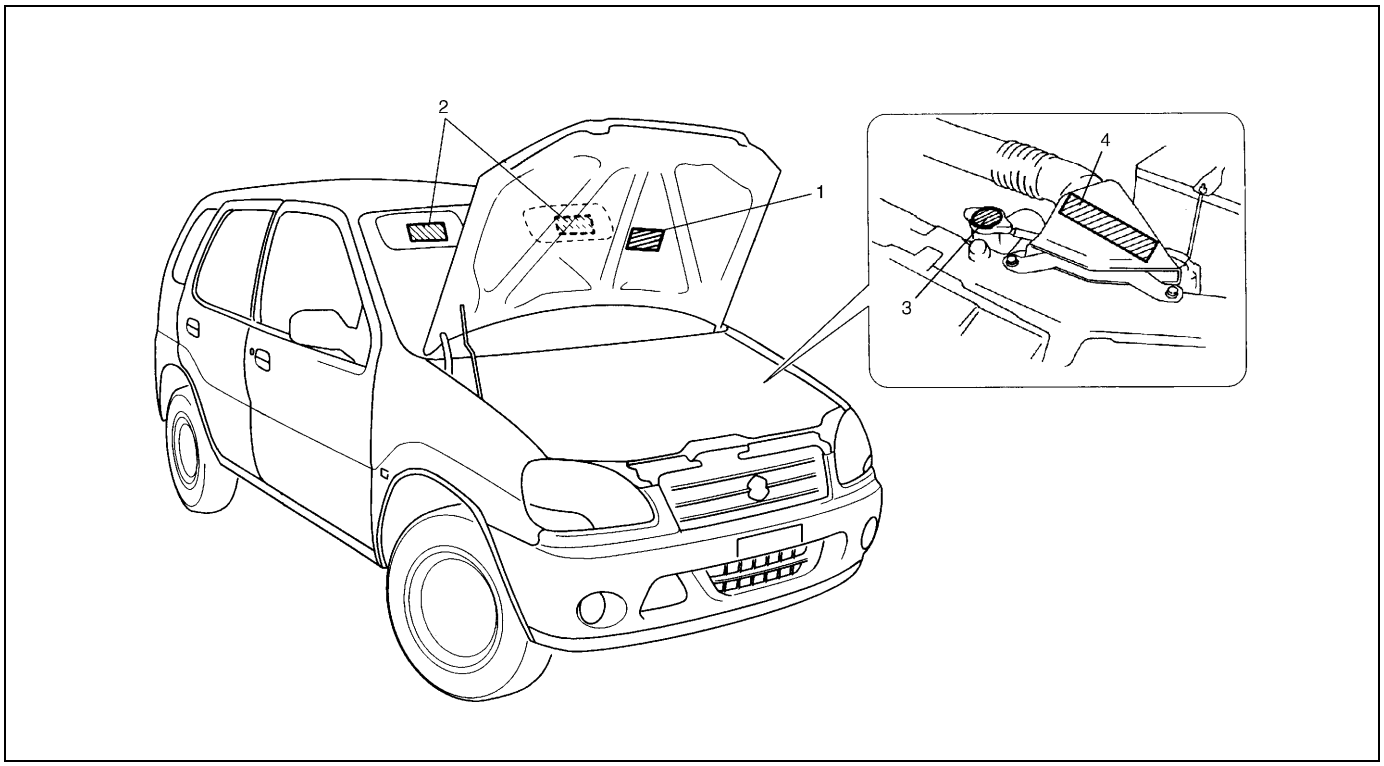

1.	Air bag label on back side of engine hood (if equipped)
2.	Air bag label on sun visor (if equipped)
3.	Radiator cap label
4.	Engine cooling fan label

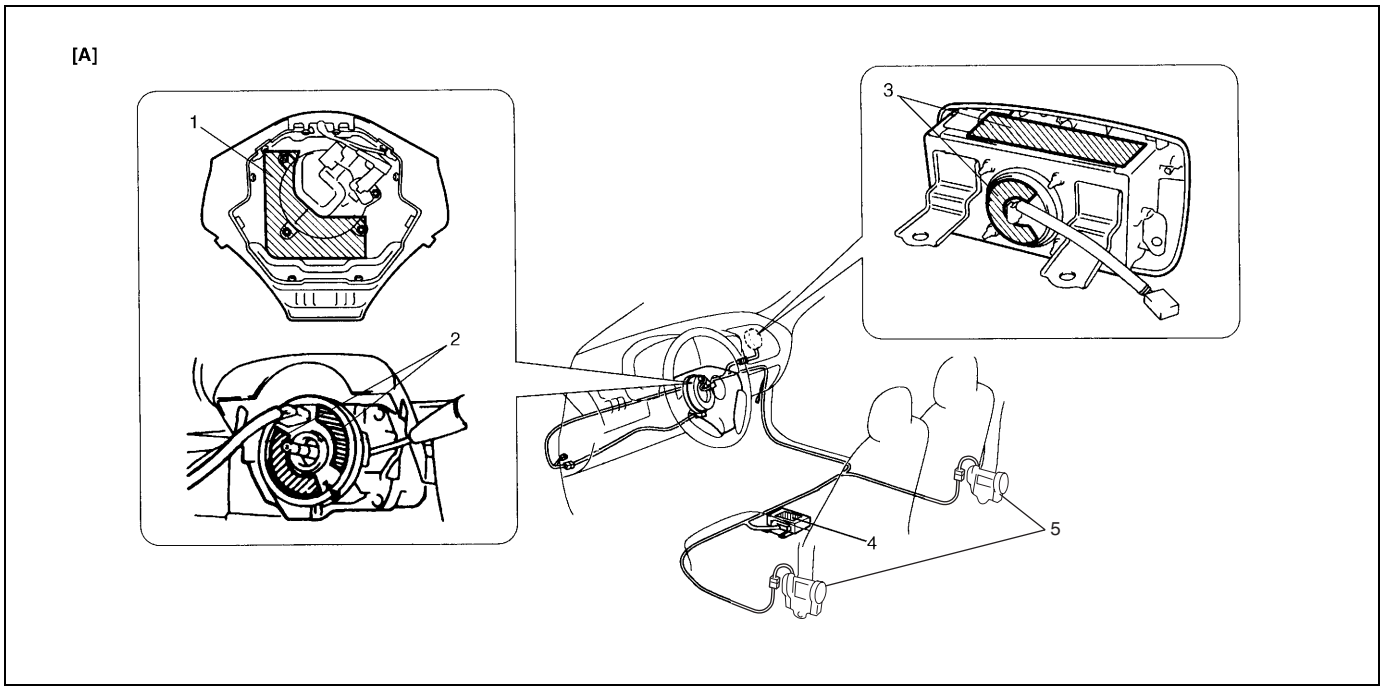

1.	Air bag label on driver air bag (inflator) module	4.	Air bag label on SDM
2.	Air bag label on combination switch and contact coil assembly	5.	Pretensioner label on seat belt retractor
3.	Air bag label on passenger air bag (inflator) module	[A] :	These labels are attached on vehicle equipped with air bag system only.

VEHICLE LIFTING POINTS

WARNING:

- **Before applying hoist to underbody, always take vehicle balance throughout service into consideration. Vehicle balance on hoist may change depending on what part to be removed.**
- **Before lifting up the vehicle, check to be sure that end of hoist arm is not in contact with brake pipe, fuel pipe, bracket or any other part.**
- **When using frame contact hoist, apply hoist as shown (right and left at the same position). Lift up the vehicle till 4 tires are a little off the ground and make sure that the vehicle will not fall off by trying to move vehicle body in both ways. Work can be started only after this confirmation.**
- **Make absolutely sure to lock hoist after vehicle is hoisted up.**

WHEN USING FRAME CONTACT HOIST

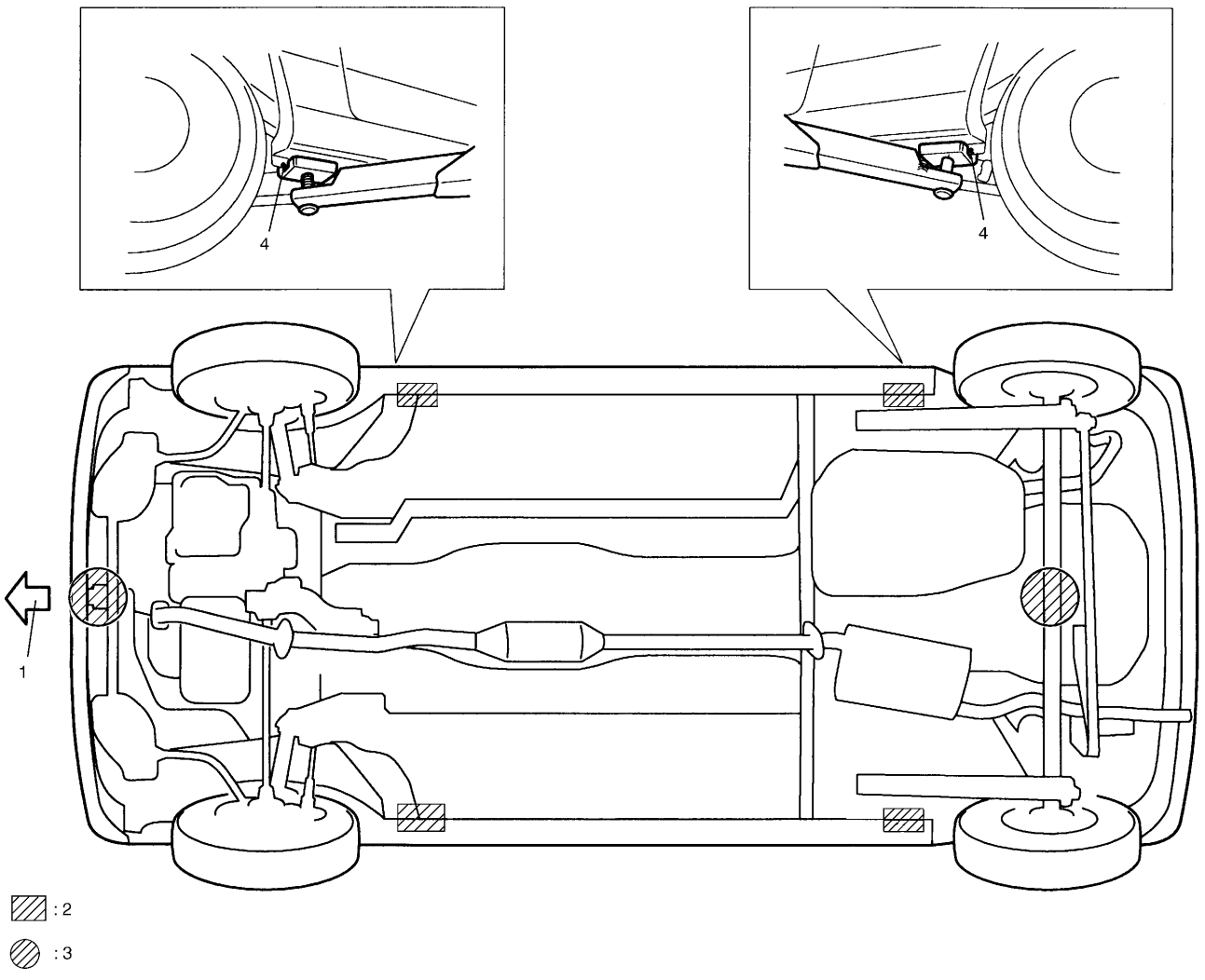

1.	Vehicle front
2.	Support position for frame contact hoist and safety stand
3.	Floor jack position
4.	Embossed-mark

WHEN USING FLOOR JACK

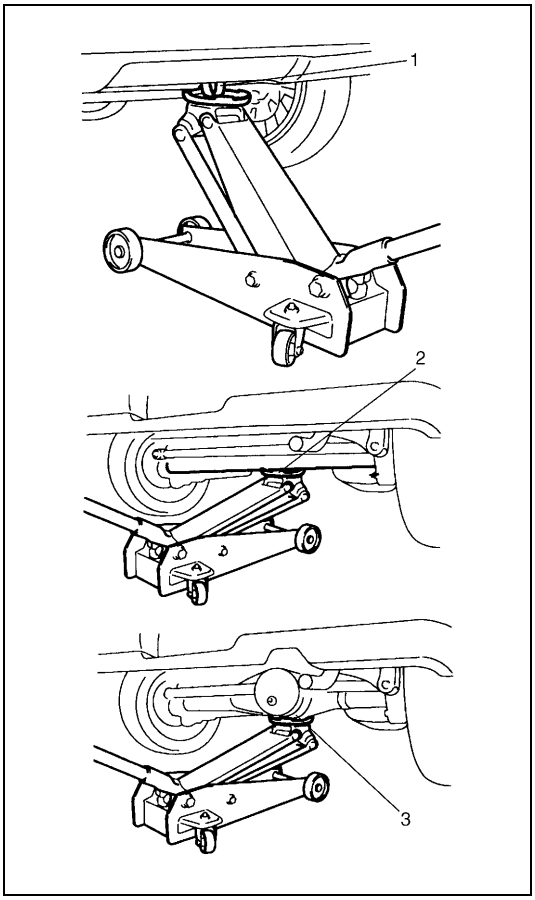

WARNING:

If the vehicle to be jacked up only at the front or rear end, be sure to block the wheels on ground in order to ensure safety.

After the vehicle is jacked up, be sure to support it on stands. It is extremely dangerous to do any work on the vehicle raised on jack alone.

CAUTION:

Never apply jack against suspension parts (i.e., stabilizer, etc) or vehicle floor, or it may get deformed.

In raising front or rear vehicle end off the floor by jacking, be sure to put the jack against the front jacking bracket (1), the center portion of rear axle (2) (2WD vehicle) or rear axle housing (3) (4WD vehicle).

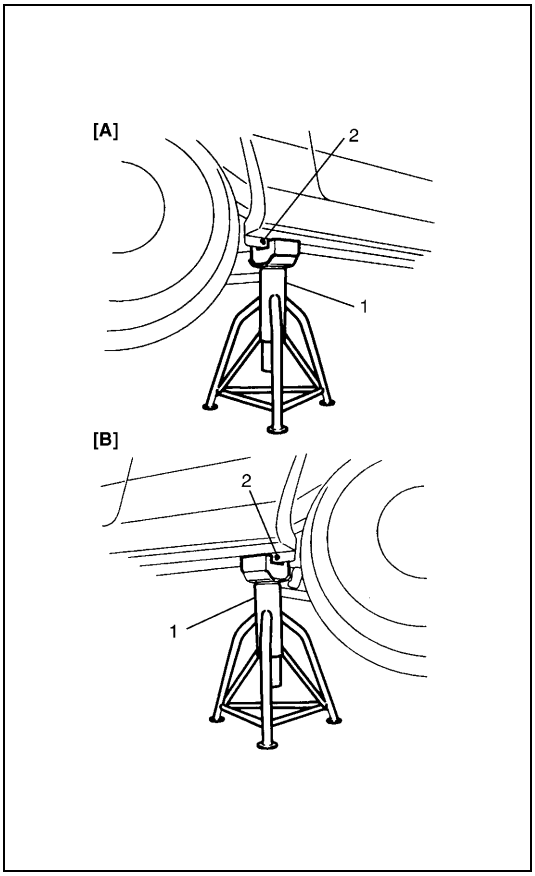

To perform service with either front or rear vehicle end jacked up, be sure to place safety stands (1) under vehicle body so that vehicle body is securely supported. And then check to ensure that vehicle body does not slide on safety stands (1) and the vehicle is held stable for safety's sake.

[A] : Front
[B] : Rear
2. Embossed mark

ABBREVIATIONS AND SYMBOLS MAY BE USED IN THIS MANUAL

ABBREVIATIONS

A	ABS	Anti-lock Brake System
	ATDC	After Top Dead Center
	API	American Petroleum Institute
	ATF	Automatic Transmission Fluid
	ALR	Automatic Locking Retractor
	AC	Alternating Current
	A/T	Automatic Transmission
	A/C	Air Conditioning
	ABDC	After Bottom Dead Center
	A/F	Air Fuel Mixture Ratio
	A-ELR	Automatic-Emergency Locking Retractor
B	B+	Battery Positive Voltage
	BTDC	Before Top Dead Center
	BBDC	Before Bottom Dead Center
C	CKT	Circuit
	CKP sensor	Crankshaft Position Sensor
	CMP sensor	Camshaft Position Sensor
	CO	Carbon Monoxide
	CPP switch	Clutch Pedal Position Switch (Clutch Switch, Clutch Start Switch)
	CPU	Central Processing Unit
	CRS	Child Restraint System
D	DC	Direct Current
	DLC	Data Link Connector (Assembly Line Diag. Link, ALDL, Serial Data Link, SDL)
	DOHC	Double Over Head Camshaft
	DOJ	Double Offset Joint
	DRL	Daytime Running Light
	DTC	Diagnostic Trouble Code (Diagnostic Code)
E	EBCM	Electronic Brake Control Module, ABS Control Module
	EBD	Electronic Brake Force Distribution
	ECM	Engine Control Module
	ECT sensor	Engine Coolant Temperature Sensor (Water Temp. Sensor, WTS)
	EGR	Exhaust Gas Recirculation
	EGRT sensor	EGR Temperature Sensor (Recirculated Exhaust Gas Temp. Sensor, REGTS)
	EFE Heater	Early Fuel Evaporation Heater (Positive Temperature Coefficient, PTC Heater)
	EPS	Electronic Power Steering
	EVAP	Evaporative Emission
	EVAP Canister	Evaporative Emission Canister (Charcoal Canister)
F	4WD	4 Wheel Drive
G	GEN	Generator
	GND	Ground
H	HC	Hydrocarbons
	HO2S	Heated Oxygen Sensor
I	IAC Valve	Idle Air Control Valve (Idle Speed Control Solenoid Valve ISC Solenoid Valve)
	IAT Sensor	Intake Air Temperature Sensor (Air temperature Sensor, ATS)
	ICM	Immobilizer Control Module
	IG	Ignition
	ISC Actuator	Idle Speed Control Actuator
L	LH	Left Hand
	LSPV	Load Sensing Proportioning Valve
M	MAF Sensor	Mass Air Flow Sensor (Air Flow Sensor, AFS, Air Flow Meter, AFM)
	MAP Sensor	Manifold Absolute Pressure Sensor (Pressure Sensor, PS)
	Max	Maximum
	MFI	Multiport Fuel Injection (Multipoint Fuel Injection)
	MIN	Minimum
	MIL	Malfunction Indicator Lamp (“SERVICE ENGINE SOON” Light)
	M/T	Manual Transmission
N	NOx	Nitrogen Oxides
O	OBD	On-Board Diagnostic System (Self-Diagnosis Function)
	O/D	Overdrive
	OHC	Over Head Camshaft
	O2S	Oxygen Sensor
P	PNP	Park/Neutral Position
	P/S	Power Steering

P	PSP Switch	Power Steering Pressure Switch (P/S Pressure Switch)
	PCM	Powertrain Control Module
	PCV	Positive Crankcase Ventilation
R	RH	Right Hand
S	SAE	Society of Automotive Engineers
	SDM	Sensing and Diagnostic Module (Air bag controller, Air bag control module)
	SFI	Sequential Multiport Fuel Injection
	SOHC	Single over Head Camshaft
T	TBI	Throttle Body Fuel Injection (Single-Point Fuel Injection, SPI)
	TCC	Torque Converter Clutch
	TCM	Transmission Control Module (A/T Controller, A/T Control Module)
	TP Sensor	Throttle Position Sensor
	TVV	Thermal Vacuum Valve (Thermal Vacuum Switching Valve, TVSV, Bimetal Vacuum Switching Valve, BVSV)
	TWC	Three Way Catalytic Converter (Three Way Catalyst)
	2WD	2 Wheel Drive
V	VIN	Vehicle Identification Number
	VSS	Vehicle Speed Sensor
W	WU-OC	Warm Up Oxidation Catalytic Converter
	WU-TWC	Warm Up Three Way Catalytic Converter

SYMBOLS

SYMBOL	DEFINITION	SYMBOL	DEFINITION
	Tightening torque	1216	Apply SUZUKI BOND NO. 1216 99000-31160
OIL	Apply oil (engine, transmission, transfer, differential)	Si	Apply SILICONE SEALANT 99000-31120
FLD	Apply fluid (brake, power steering or automatic transmission fluid)	366E	Apply SEALING COMPOUND 366E 99000-31090
A	Apply SUZUKI SUPER GREASE A 99000-25010		
C	Apply SUZUKI SUPER GREASE C 99000-25030	1322	Apply THREAD LOCK 1322 99000-32110
E	Apply SUZUKI SUPER GREASE E 99000-25050	1333B	Apply THREAD LOCK 1333B 99000-32020
H	Apply SUZUKI SUPER GREASE H 99000-25120	1342	Apply THREAD LOCK 1342 99000-32050
I	Apply SUZUKI SUPER GREASE I 99000-25210		
1215	Apply SUZUKI BOND NO. 1215 99000-31110		Do not reuse
1207C	Apply SUZUKI BOND NO. 1207C 99000-31150		Note on reassembly

WIRE COLOR SYMBOLS

Symbol		Wire Color	Symbol		Wire Color
B	BLK	Black	O, Or	ORN	Orange
Bl	BLU	Blue	R	RED	Red
Br	BRN	Brown	W	WHT	White
G	GRN	Green	Y	YEL	Yellow
Gr	GRY	Gray	P	PNK	Pink
Lbl	LT BLU	Light blue	V	PPL	Violet
Lg	LT GRN	Light green			

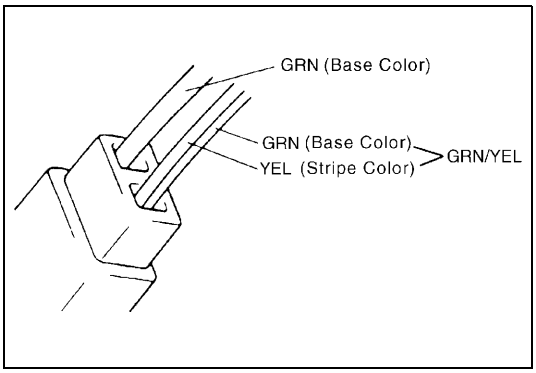

There are two kinds of colored wire used in this vehicle. One is single-colored wire and the other is dual-colored (striped) wire.
The single-colored wire uses only one color symbol (i.e. “GRN”).
The dual-colored wire uses two color symbols (i.e. “GRN/YEL”).
The first symbol represents the base color of the wire (“GRN” in the figure) and the second symbol represents the color of the stripe (“YEL” in the figure).

FASTENER INFORMATION

METRIC FASTENERS

Most of the fasteners used for this vehicle are metric. When replacing any fasteners, it is most important that replacement fasteners be the correct diameter, thread pitch and strength.

FASTENER STRENGTH IDENTIFICATION

Most commonly used metric fastener strength property classes are 4T, 6.8, 7T, 8.8 and radial line with the class identification embossed on the head of each bolt. Some metric nuts will be marked with punch, 6 or 8 mark strength identification on the nut face. Figure shows the different strength markings.
When replacing metric fasteners, be careful to use bolts and nuts of the same strength or greater than the original fasteners (the same number marking or higher). It is likewise important to select replacement fasteners of the correct diameter and thread pitch. Correct replacement bolts and nuts are available through the parts division.

Metric bolts : Identification class numbers or marks correspond to bolt strength (increasing numbers represent increasing strength).

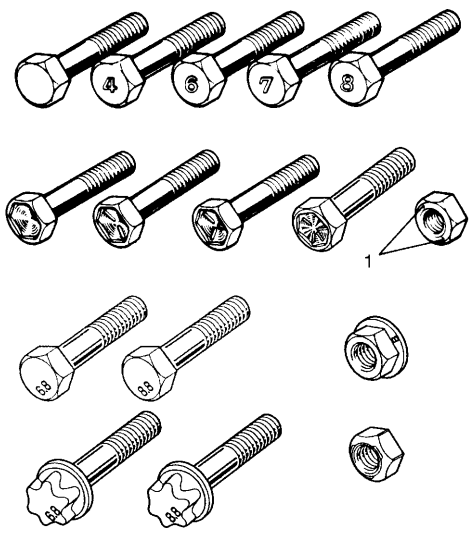

1. Nut strength identification

STANDARD TIGHTENING TORQUE

Each fastener should be tightened to the torque specified in each section of this manual. If no description or specification is provided, refer to the following tightening torque chart for the applicable torque for each fastener. When a fastener of greater strength than the original one is used, however, use the torque specified for the original fastener.

NOTE:

- **For the flanged bolt, flanged nut and self-lock nut of 4T and 7T strength, add 10% to the tightening torque given in the chart below.**
- **The chart below is applicable only where the fastened parts are made of steel light alloy.**

Tightening torque chart :

			Thread Diameter (Nominal Diameter) (mm)								
			4	5	6	8	10	12	14	16	18
Strength	A equivalent of 4T strength fastener 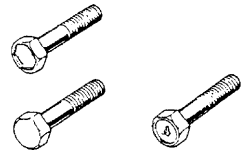	N·m	1.5	3.0	5.5	13	29	45	65	105	160
		kg-m	0.15	0.30	0.55	1.3	2.9	4.5	6.5	10.5	16
		lb-ft	1.0	2.5	4.0	9.5	21.0	32.5	47.0	76.0	116.0
	A equivalent of 6.8 strength fastener without flange	N·m	2.4	4.7	8.4	20	42	80	125	193	280
		kg-m	0.24	0.47	0.84	2.0	4.2	8.0	12.5	19.3	28
		lb-ft	2.0	3.5	6.0	14.5	30.5	58.0	90.5	139.5	202.5
	A equivalent of 6.8 strength fastener with flange 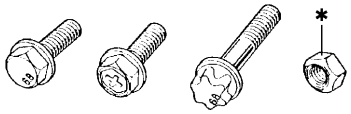	N·m	2.4	4.9	8.8	21	44	84	133	203	298
		kg-m	0.24	0.49	0.88	2.1	4.4	8.4	13.3	20.3	29.8
		lb-ft	2.0	3.5	6.5	15.5	32.0	61.0	96.5	147.0	215.5
	A equivalent of 7T strength fastener	N·m	2.3	4.5	10	23	50	85	135	210	240
		kg-m	0.23	0.45	1.0	2.3	5.0	8.5	13.5	21	24
		lb-ft	2.0	3.5	7.5	17.0	36.5	61.5	98.0	152.0	174.0
	A equivalent of 8.8 strength fastener without flange 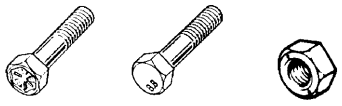	N·m	3.1	6.3	11	27	56	105	168	258	373
		kg-m	0.31	0.63	1.1	2.7	5.6	10.5	16.8	25.8	37.3
		lb-ft	2.5	4.5	8.0	19.5	40.5	76.0	121.5	187.0	270.0
	A equivalent of 8.8 strength fastener with flange 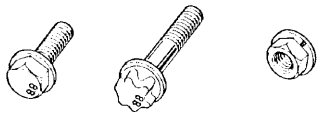	N·m	3.2	6.5	12	29	59	113	175	270	395
		kg-m	0.32	0.65	1.2	2.9	5.9	11.3	17.5	27	39.5
		lb-ft	2.5	5.0	9.0	21.0	43.0	82.0	126.5	195.5	286.0

*: Self-lock nut

SECTION 0B

MAINTENANCE AND LUBRICATION

WARNING:

For vehicles equipped with Supplemental Restraint (Air Bag) System:

- **Service on and around the air bag system components or wiring must be performed only by an authorized SUZUKI dealer. Refer to "Air Bag System Components and Wiring Location View" under "General Description" in air bag system section in order to confirm whether you are performing service on or near the air bag system components or wiring. Please observe all WARNINGS and "Service Precautions" under "On-Vehicle Service" in air bag system section before performing service on or around the air bag system components or wiring. Failure to follow WARNINGS could result in unintentional activation of the system or could render the system inoperative. Either of these two conditions may result in severe injury.**
- **Technical service work must be started at least 90 seconds after the ignition switch is turned to the "LOCK" position and the negative cable is disconnected from the battery. Otherwise, the system may be activated by reserve energy in the Sensing and Diagnostic Module (SDM).**

CONTENTS

MAINTENANCE SCHEDULE 0B-2
MAINTENANCE SCHEDULE UNDER NORMAL DRIVING CONDITIONS 0B-2
MAINTENANCE RECOMMENDED UNDER SEVERE DRIVING CONDITIONS 0B-4
MAINTENANCE SERVICE 0B-5
ENGINE 0B-5
DRIVE BELT 0B-5
VALVE LASH (CLEARANCE) 0B-6
ENGINE OIL AND OIL FILTER 0B-6
ENGINE COOLANT 0B-8
EXHAUST SYSTEM 0B-10
IGNITION SYSTEM 0B-10
SPARK PLUGS 0B-10
FUEL SYSTEM 0B-10
AIR CLEANER FILTER 0B-10
FUEL LINES AND CONNECTIONS 0B-11
FUEL FILTER 0B-11
FUEL TANK 0B-12
EMISSION CONTROL SYSTEM 0B-12
PCV VALVE 0B-12
FUEL EVAPORATIVE EMISSION CONTROL SYSTEM 0B-12
BRAKE 0B-12
BRAKE DISCS AND PADS (FRONT) 0B-12
BRAKE DRUMS AND SHOES (REAR) 0B-13
BRAKE HOSES AND PIPES 0B-13
BRAKE FLUID 0B-13
BRAKE LEVER AND CABLE 0B-13
CHASSIS AND BODY 0B-14
CLUTCH 0B-14
TIRES / WHEELS 0B-14
SUSPENSION SYSTEM 0B-15
STEERING SYSTEM 0B-15
DRIVE SHAFT (AXLE) BOOTS / PROPELLER SHAFTS (4WD) 0B-16
MANUAL TRANSMISSION OIL 0B-17
AUTOMATIC TRANSMISSION FLUID 0B-17
TRANSFER OIL (4WD) AND REAR DIFFERENTIAL OIL (4WD) 0B-18
ALL LATCHES, HINGES AND LOCKS 0B-19
FINAL INSPECTION 0B-19
RECOMMENDED FLUIDS AND LUBRICANTS 0B-21

MAINTENANCE SCHEDULE

MAINTENANCE SCHEDULE UNDER NORMAL DRIVING CONDITIONS

NOTE:

- **This interval should be judged by odometer reading or months, whichever comes first.**
- **This table includes service as scheduled up to 90,000 km (54,000 miles) mileage. Beyond 90,000 km (54,000 miles), carry out the same services at the same intervals respectively.**

Interval				Km (x 1,000)	15	30	45	60	75	90
				Miles (x 1,000)	9	18	27	36	45	54
				Months	12	24	36	48	60	72
ENGINE										
Drive belt					–	–	I	–	–	R
Valve lash (clearance)					–	I	–	I	–	I
Engine oil and oil filter					R	R	R	R	R	R
Engine coolant					–	–	R	–	–	R
Exhaust system					–	I	–	I	–	I
IGNITION SYSTEM										
✱Spark plugs	When unleaded fuel is used	Vehicle without HO2S	Nickel plug		–	R	–	R	–	R
			Iridium plug		–	–	–	R	–	–
		Vehicle with HO2S	Nickel plug		–	–	R	–	–	R
			Iridium plug		Replace every 105,000 km (63,000 miles) or 84 months					
	When leaded fuel is used, refer to “MAINTENANCE RECOMMENDED UNDER SEVERE DRIVING CONDTION” in this section.									
FUEL SYSTEM										
Air cleaner filter			Paved-road		I	I	R	I	I	R
			Dusty conditions		Refer to “MAINTENANCE RECOMMENDED UNDER SEVERE DRIVING CONDITIONS” in this section.					
Fuel lines and connections					–	I	–	I	–	I
Fuel filter					Replace every 105,000 km (63,000 miles)					
Fuel tank					–	–	I	–	–	I
EMISSION CONTROL SYSTEM										
✱PCV valve		Vehicle without HO2S			–	–	I	–	–	I
		Vehicle with HO2S			–	–	–	–	–	I
✱Fuel evaporative emission control system					–	–	–	–	–	I

NOTE:

- **“R” : Replace or change**
- **“I” : Inspect and correct, replace or lubricate if necessary**
- **For Sweden, items with ✱ (asterisk) should be performed by odometer reading only.**
- **For spark plugs, replace every 50,000 km if the local law requires.**
- **Nickel spark plug : BKR6E-11 (NGK) or K20PR-U11 (DENSO)**
- **Iridium spark plug : IFR5E11 (NGK)**

Interval	Km (x 1,000)	15	30	45	60	75	90
	Miles (x 1,000)	9	18	27	36	45	54
	Months	12	24	36	48	60	72
BRAKE							
Brake discs and pads (thickness, wear, damage)		I	I	I	I	I	I
Brake drums and shoes (wear, damage)		–	I	–	I	–	I
Brake hoses and pipes (leakage, damage, clamp)		–	I	–	I	–	I
Brake fluid		–	R	–	R	–	R
Brake lever and cable (damage, stroke, operation)		Inspect at first 15,000 km (9,000 miles only)					
CHASSIS AND BODY							
Clutch (pedal height and travel)		–	I	–	I	–	I
Tires (wear, damage, rotation) /wheels (damage)		I	I	I	I	I	I
Suspension system (tightness, damage, rattle, breakage)		–	I	–	I	–	I
Steering system (tightness, damage, breakage, rattle)		–	I	–	I	–	I
Drive shaft (axle) boots/Propeller shafts (4WD)		–	–	I	–	–	I
Manual transmission oil (leakage, level) (I : 1st 15,000 km only)		I	–	R	–	–	R
Automatic transmission fluid	Fluid level	–	I	–	I	–	I
	Fluid change	Replace every 165,000 km (99,000 miles)					
Transfer oil (4WD) (leakage, level)		I	–	I	–	I	–
Rear differential oil (4WD) (leakage, level) (R : 1st 15,000 km only)		R or I	–	I	–	I	–
All latches, hinges and locks		–	I	–	I	–	I

NOTE:

- **"R" : Replace or change**
- **"I" : Inspect and correct or replace if necessary**

MAINTENANCE RECOMMENDED UNDER SEVERE DRIVING CONDITIONS

If the vehicle is usually used under the conditions corresponding to any severe condition code given below, IT IS RECOMMENDED that applicable maintenance operation be performed at the particular interval as shown in the following table.

Severe condition code :

A : Repeated short trips
B : Driving on rough and/or muddy roads
C : Driving on dusty roads
D : Driving in extremely cold weather and/or salted roads
E : Repeated short trips in extremely cold weather
F : Leaded fuel use
G : – – – – –
H : Towing a trailer (if admitted)

Severe Condition Code	Maintenance		Maintenance Operation	Maintenance Interval
– B C D – – – –	Drive belt		I	Every 15,000 km (9,000 miles) or 12 months
			R	Every 45,000 km (27,000 miles) or 36 months
A – C D E F – H	Engine oil and oil filter		R	Every 5,000 km (3,000 miles) or 4 months
– – C – – – – –	Air cleaner filter ✱1		I	Every 2,500 km (1,500 miles)
			R	Every 30,000 km (18,000 miles) or 24 months
A B C – E F – H	Spark plugs	Nickel spark plug	R	Every 10,000 km (6,000 miles) or 8 months
		Iridium spark plug	R	Every 30,000 km (18,000 miles) or 24 months
– B C D – – – H	Wheel bearings		I	Every 15,000 km (9,000 miles) or 12 months
– B – D E – – H	Drive shafts and propeller shafts (4WD)		I	Every 15,000 km (9,000 miles) or 12 months
– B – – E – – H	Manual transmission, transfer (4WD) and differential oil (4WD)		R	Every 30,000 km (18,000 miles) or 24 months
– B – – E – – H	Automatic transmission fluid		R	Every 30,000 km (18,000 miles) or 24 months

NOTE:

- **"I" : Inspect and correct or replace if necessary**
- **"R" : Replace or change**
- **✱1 : Inspect more frequently if the vehicle is used under dusty conditions.**

MAINTENANCE SERVICE

ENGINE

DRIVE BELT

WARNING:
All inspection and replacement are to be performed with ENGINE NOT RUNNING.

WATER PUMP AND GENERATOR DRIVE BELT INSPECTION

1) Disconnect negative (–) cable at battery.

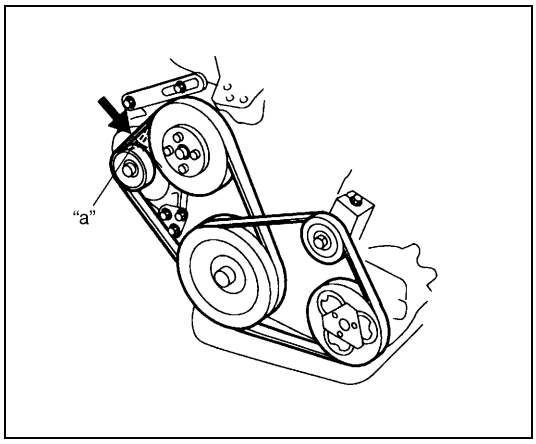

2) Inspect belt for cracks, cuts, deformation, wear and cleanliness. If any defect exists, replace.
   Check belt for tension.

   Water pump and generator belt tension
   "a" : 4.5 - 5.5 mm (0.18 - 0.22 in.) deflection under 100 N (10 kg, 22 lb) pressure

   NOTE:
   When replacing belt with a new one, adjust belt tension to 3 - 4 mm (0.12 - 0.16 in.)

3) If belt is too tight or too loose, adjust it to specification by adjusting alternator position.
4) Tighten alternator adjusting bolts and pivot bolt.
5) Connect negative (–) cable to battery.

WATER PUMP AND GENERATOR DRIVE BELT REPLACEMENT

Replace belt with new one referring to "WATER PUMP BELT" in Section 6B.

A/C COMPRESSOR DRIVE BELT (IF EQUIPPED) INSPECTION

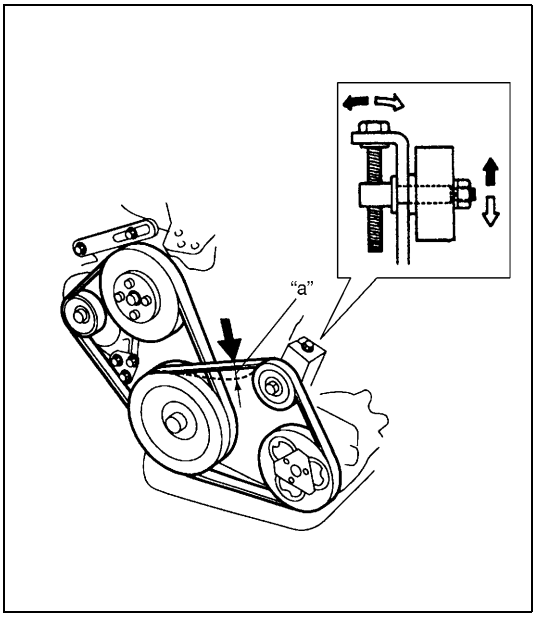

1) Disconnect negative (–) cable at battery.
2) Inspect belt for cracks, cuts, deformation, wear and cleanliness. If any defect exists, replace.
   Check belt for tension.
   If belt tension is out of specification, adjust it referring to "COMPRESSOR DRIVE BELT" in Section 1B.

A/C compressor drive belt tension
"a" : 3 - 5 mm (0.12 - 0.20 in.) deflection under 100 N (10 kg, 22 lb) pressure

3) Connect negative (–) cable to battery.

REPLACEMENT

Replace belt with new one referring to "COMPRESSOR DRIVE BELT" in Section 1B.

VALVE LASH (CLEARANCE)

INSPECTION

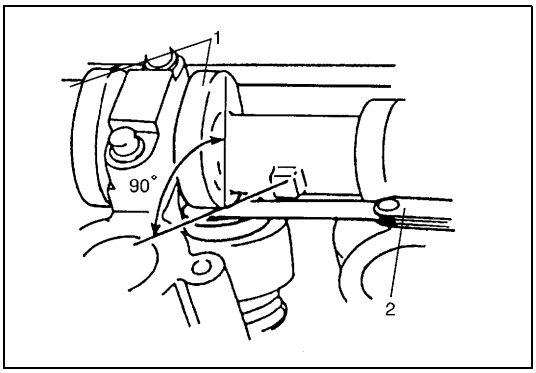

1) Inspect intake and exhaust valve lash and adjust as necessary.
   Refer to "VALVE LASH" in Section 6A1 for valve lash inspection and adjustment procedure.

1.	Camshaft
2.	Thickness gauge

ENGINE OIL AND OIL FILTER

REPLACEMENT

WARNING:
- **New and used engine oil can be hazardous. Be sure to read "WARNING" in General Precaution in Section 0A and observe what in written there.**
- **Step 1) - 7) outlined below must be performed with ENGINE NOT RUNNING. For step 8), be sure to have adequate ventilation while engine is running.**

Before draining engine oil, check engine for oil leakage. If any evidence of leakage is found, make sure to correct defective part before proceeding to the following work.

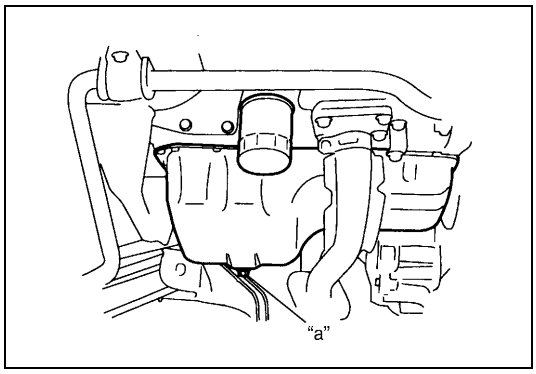

1) Drain engine oil by removing drain plug.
2) After draining oil, wipe drain plug clean. Reinstall drain plug, and tighten it securely as specified below.

Tightening torque
Engine oil drain plug (a) : 50 N·m (5.0 kg-m, 36.5 lb-ft)

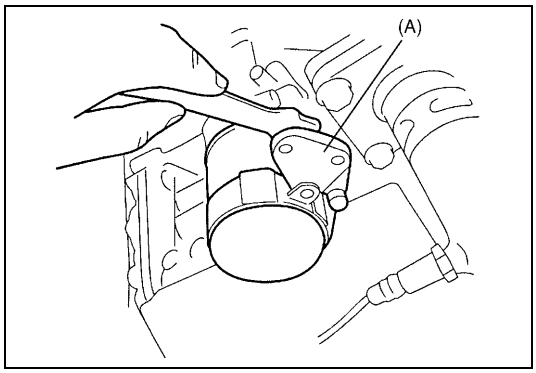

3) Loosen oil filter by using oil filter wrench (special tool).

Special tool
(A) : 09915-47330

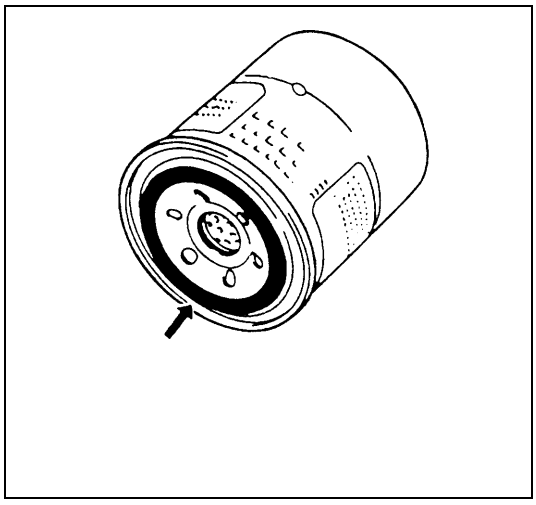

NOTE:

Before fitting new oil filter, be sure to oil its O-ring. Use engine oil for this purpose.

4) Screw new filter on oil filter stand by hand until the filter O-ring contacts the mounting surface.

CAUTION:

To tighten oil filter properly, it is important to accurately identify the position at which filter O-ring first contacts the mounting surface.

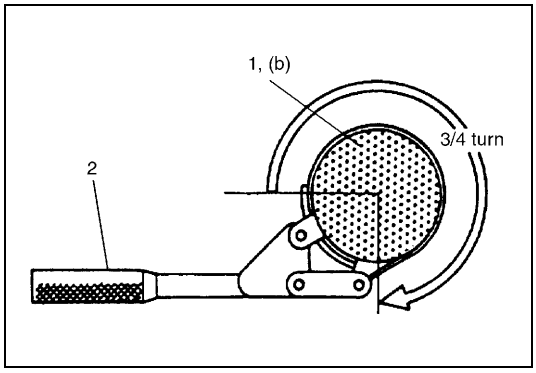

5) Tighten the filter (1) 3/4 turn from the point of contact with the mounting surface using an oil filter wrench (2).

Tightening torque
Oil filter (b) : 14 N·m (1.4 kg-m, 10.5 lb-ft) (for reference)

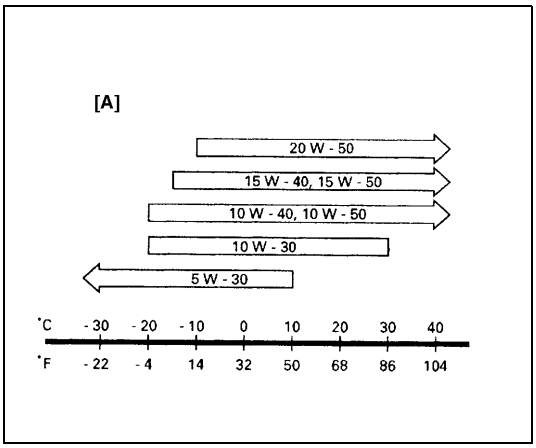

6) Replenish oil until oil level is brought to FULL level mark on dipstick. (oil pan and oil filter capacity). The filler inlet is at the top of the cylinder head cover.
   It is recommended to use engine oil of SE, SF, SG, SH or SJ grade. Select the appropriate oil viscosity according to the proper engine oil viscosity chart [A].

NOTE:

For ambient temperature between –20°C (–4°F) and 30°C (86°F), it is highly recommended to use SAE 10W – 30 oil.

Engine oil specification

Oil pan capacity	About 3.6 liters (7.6/6.3 US/Imp pt.)
Oil filter capacity	About 0.2 liter (0.4/0.3 US/Imp pt.)
Others	About 0.3 liter (0.6/0.5 US/Imp pt.)
Total	About 4.1 liters (8.7/7.2 US/Imp pt.)

NOTE:

Engine oil capacity is specified. However, note that the amount of oil required when actually changing oil may somewhat differ from the data in the table depending on various conditions (temperature, viscosity, etc.)

7) Check oil filter and drain plug for oil leakage.

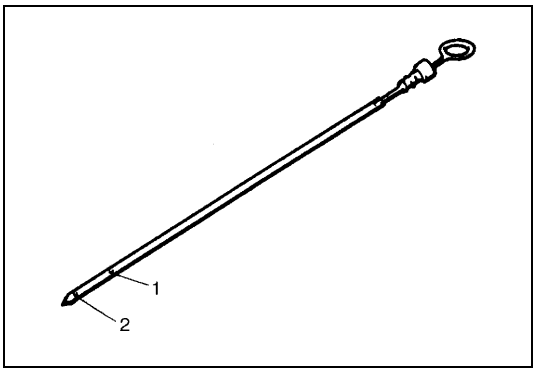

8) Start engine and run it for 3 minutes. Stop it and wait 5 minutes before checking oil level. Add oil, as necessary, to bring oil level to FULL level mark on dipstick.

1. Full level mark (hole)
2. Low level mark (hole)

ENGINE COOLANT

REPLACEMENT

WARNING:

To help avoid danger of being burned, do not remove radiator cap while engine and radiator are still hot. Scalding fluid and steam can be blown out under pressure if cap is taken off too soon.

CAUTION:

When changing engine coolant, use mixture of 50% water and 50% ANTIFREEZE/ANTICORROSION COOLANT for the market where ambient temperature falls lower than –16°C (3°F) in winter, and mixture of 70% water and 30% ANTIFREEZE/ANTICORROSION COOLANT for the market where ambient temperature doesn't fall lower than –16°C (3°F).

Even in a market where no freezing temperature is anticipated, mixture of 70% water and 30% ANTIFREEZE/ANTICORROSION COOLANT should be used for the purpose of corrosion protection and lubrication.

1) Remove radiator cap when engine is cool.

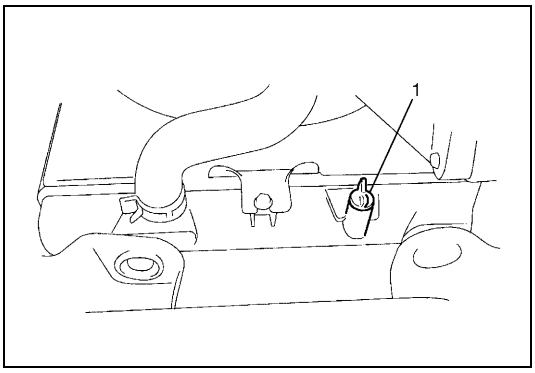

2) Loosen radiator drain plug (1) to drain coolant.
3) Remove reservoir and drain.
4) Tighten plug securely. Also reinstall reservoir.
5) Fill radiator with specified amount of coolant, and run engine for 2 or 3 minutes at idle. This drives out any air which may still be trapped within cooling system. STOP ENGINE.
   Add coolant as necessary until coolant level reaches the filler throat of radiator. Reinstall radiator cap.

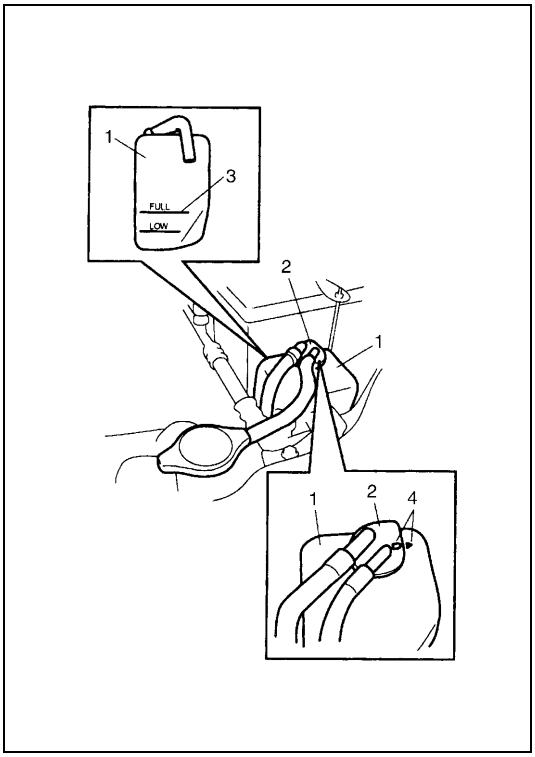

6) Add coolant to reservoir so that its level aligns with Full mark. Then, reinstall cap aligning arrow marks on reservoir and cap.

1. Reservoir
2. Reservoir cap
3. FULL level marks
4. Arrow marks

EXHAUST SYSTEM

INSPECTION

WARNING:
To avoid danger of being burned, do not touch exhaust system when it is still hot. Any service on exhaust system should be performed when it is cool.

When carrying out periodic maintenance, or the vehicle is raised for other service, check exhaust system as follows:

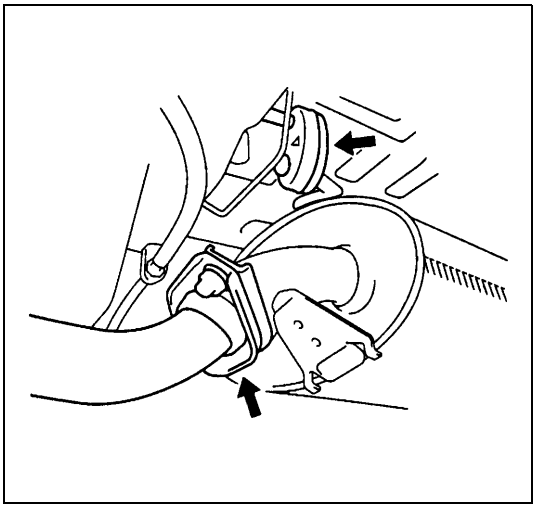

- Check rubber mountings for damage, deterioration, and out of position.
- Check exhaust system for leakage, loose connections, dents and damages.
  If bolts or nuts are loose, tighten them to specification.
- Check nearby body areas for damaged, missing, or mispositioned parts, open seams, holes, loose connections or other defects which could permit exhaust fumes to seep into the vehicle.
- Make sure that exhaust system components have enough clearance from the underbody to avoid overheating and possible damage to the floor carpet.
- Any defects should be fixed at once.

IGNITION SYSTEM

SPARK PLUGS

REPLACEMENT

Replace spark plugs with new ones referring to “SPARK PLUG” in Section 6F1.

FUEL SYSTEM

AIR CLEANER FILTER

INSPECTION

1) Remove air cleaner case clamps.
2) Take air cleaner filter out of case.
3) Check that filter is not excessively dirty, damaged or oily, clean filter with compressed air from air outlet side of filter.

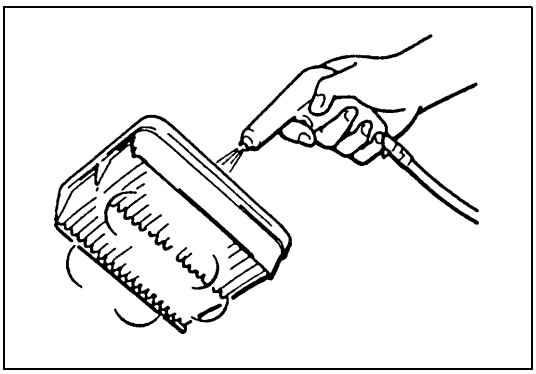

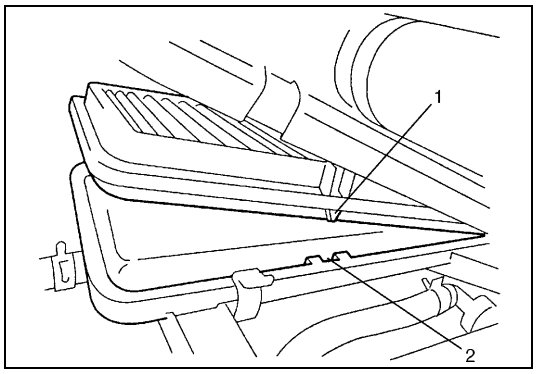

4) Install air cleaner filter fitting protrusion (1) of filter into groove (2) of case and clamp upper case securely.

REPLACEMENT

Replace air cleaner filter with new one according to steps 1), 2) and 4) of inspection procedure.

FUEL LINES AND CONNECTIONS

INSPECTION

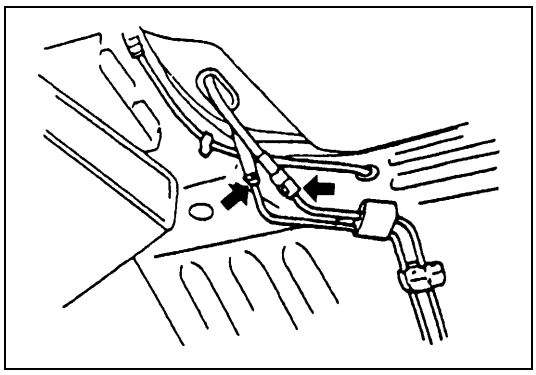

Visually inspect fuel lines and connections for evidence of fuel leakage, hose cracking and damage. Make sure all clamps are secure.
Repair leaky joints, if any.
Replace hoses that are suspected of being cracked.

FUEL FILTER

REPLACEMENT

WARNING:
This work must be performed in a well ventilated area and away from any open flames (such as gas hot water heaters).

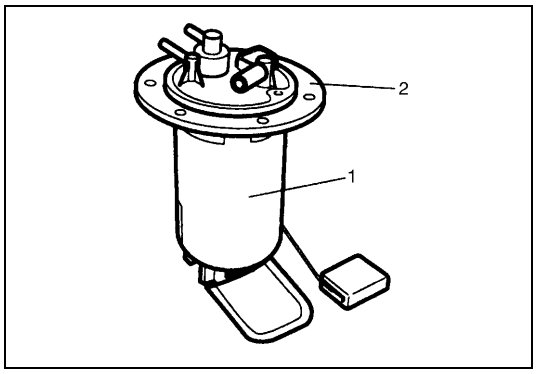

Fuel filter (1) is installed in fuel pump assembly (2) in fuel tank.
Replace fuel filter with new one, referring to “FUEL PUMP ASSEMBLY” in Section 6C for proper procedure.

FUEL TANK

INSPECTION

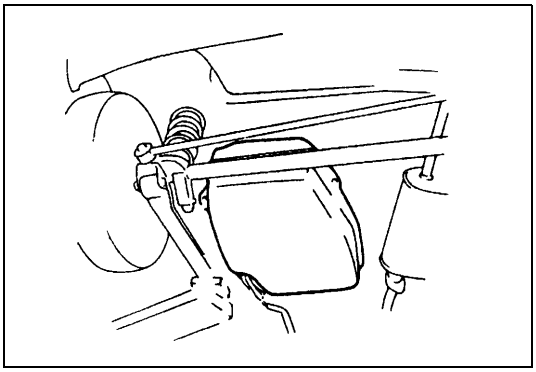

Check fuel tank damage, cracks, fuel leakage, corrosion and tank bolts looseness.
If a problem is found, repair or replace.

EMISSION CONTROL SYSTEM

PCV VALVE

INSPECTION

Check crankcase ventilation hose and PCV hose for leaks, cracks or clog, and PCV valve for stick or clog. Refer to “PCV SYSTEM” of Section 6E1 for PCV valve checking procedure.

FUEL EVAPORATIVE EMISSION CONTROL SYSTEM

INSPECTION

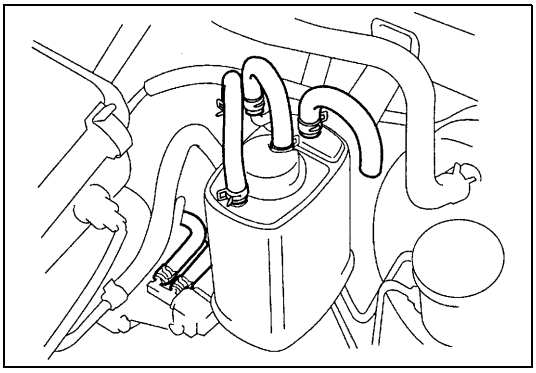

1) Visually inspect hoses for cracks, damage, or excessive bends. Inspect all clamps for damage and proper position.
2) Check EVAP canister for operation and clog, referring to “EVAP CONTROL SYSTEM” in Section 6E1.

If a malfunction is found, repair or replace.

BRAKE

BRAKE DISCS AND PADS (FRONT)

INSPECTION

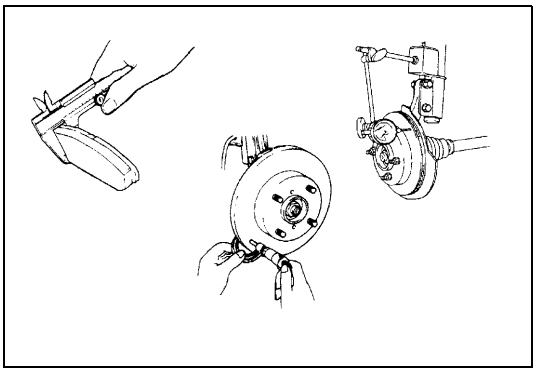

1) Remove wheel and caliper but don’t disconnect brake hose from caliper.
2) Check front disc brake pads and discs for excessive wear, damage and deflection. Replace parts as necessary. For details, refer to “FRONT DISC BRAKE PAD” in Section 5.
   Be sure to torque caliper pin bolts to specification.

BRAKE DRUMS AND SHOES (REAR)

INSPECTION

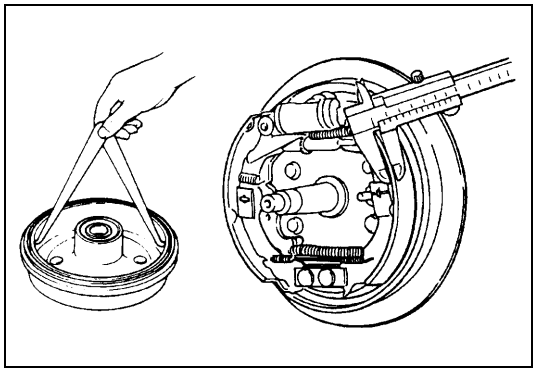

1) Remove wheel and brake drum.
2) Check rear brake drums and brake linings for excessive wear and damage, while wheels and drums are removed. At the same time, check wheel cylinders for leaks. Replace these parts as necessary.
   For details, refer to “BRAKE DRUM” in Section 5.

BRAKE HOSES AND PIPES

INSPECTION

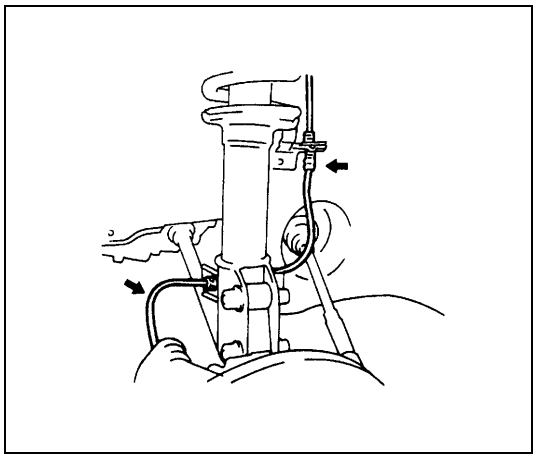

Perform this inspection where these is enough light and use a mirror as necessary.

- Check brake hoses and pipes for proper hookup, leaks, cracks, chafing and other damage.
- Check that hoses and pipes are clear of sharp edges and moving parts.

Repair or replace any of these parts as necessary.

CAUTION:
After replacing any brake pipe or hose, be sure to carry out air purge operation.

BRAKE FLUID

REPLACEMENT

Change brake fluid as follows.
Drain existing fluid from brake system completely, fill system with specified fluid and carry out air purge operation.
For air purging procedure, refer to “BLEEDING BRAKES” in Section 5.

BRAKE LEVER AND CABLE

INSPECTION

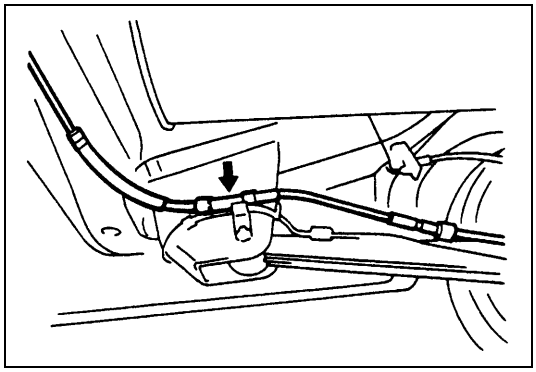

1) Inspect brake cable for damage and smooth movement. Replace cable if it is in deteriorated condition.

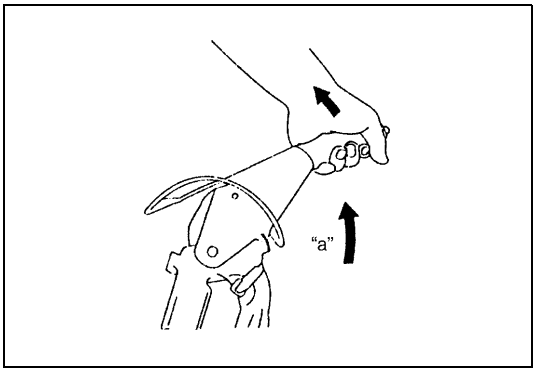

2) Check tooth tip of each notch for damage or wear. If any damage or wear is found, replace parking lever.
3) Check parking brake lever for proper operation and stroke, and adjust it if necessary.
   For checking and adjusting procedures, refer to "PARKING BRAKE INSPECTION AND ADJUSTMENT" in Section 5.

Parking brake lever stroke
"a" :4 - 9 notches (with 20 kg (44 lbs) of pull pressure)

CHASSIS AND BODY

CLUTCH

INSPECTION

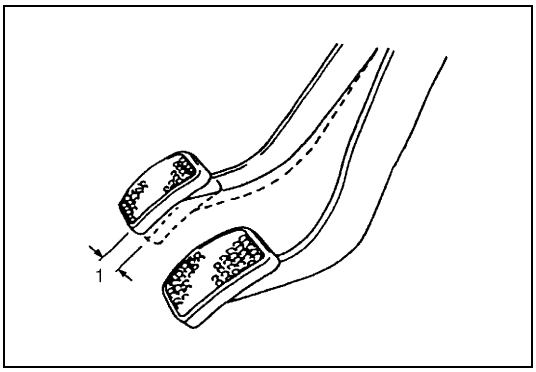

Check clutch pedal for height and free travel (1) referring to "CLUTCH PEDAL HEIGHT CHECK" and "CLUTCH PEDAL FREE TRAVEL CHECK" in Section 7C. Adjust or correct if necessary.

TIRES / WHEELS

TIRES INSPECTION

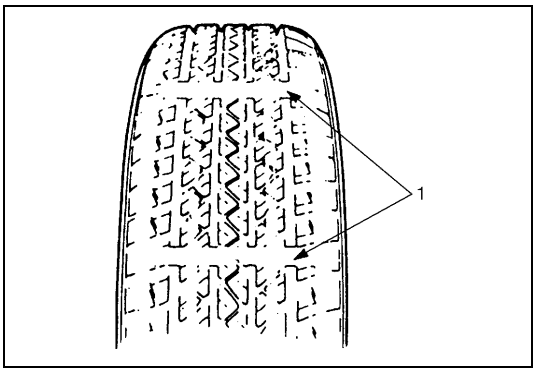

1) Check tires for uneven or excessive wear, or damage.
   If defective, replace.
   Refer to "TIRE DIAGNOSIS" in Section 3 for details.

1. Wear indicator

2) Check inflating pressure of each tire and adjust pressure to specification as necessary.

NOTE:

- **Tire inflation pressure should be checked when tires are cool.**
- **Specified tire inflation pressure should be found on tire placard or in owner's manual which came with the vehicle.**

3) Rotate tires.
   For details, refer to "TIRE ROTATION" in Section 3F.

WHEEL DISCS INSPECTION

Inspect each wheel disc for dents, distortion and cracks. A disc in badly damaged condition must be replaced.

WHEEL BEARING INSPECTION

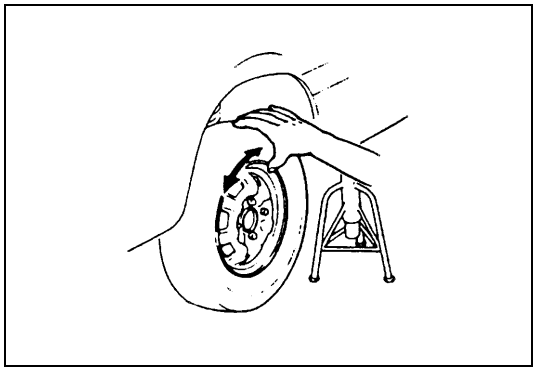

1) Check front wheel bearing for wear, damage, abnormal noise or rattles. For details, refer to “WHEEL DISC, NUT AND BEARING CHECK” in Section 3D.
2) Check rear wheel bearing for wear, damage, abnormal noise or rattles. For details, refer to “WHEEL DISC, NUT AND BEARING CHECK” in Section 3E.

SUSPENSION SYSTEM

INSPECTION

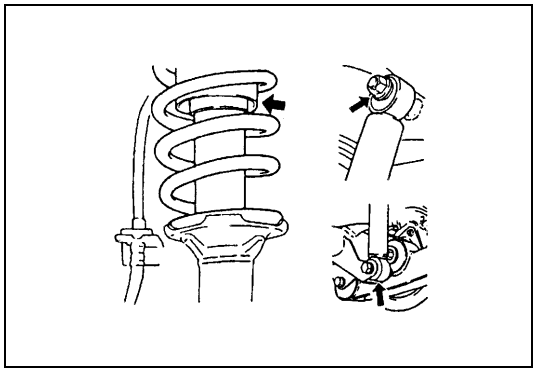

- Inspect front struts & rear shock absorbers for evidence of oil leakage, dents or any other damage on sleeves ; and inspect anchor ends for deterioration.
  Replace defective parts, if any.
- Check front and rear suspension systems for damaged, loose or missing parts ; also for parts showing signs of wear or lack of lubrication.
  Repair or replace defective parts, if any.

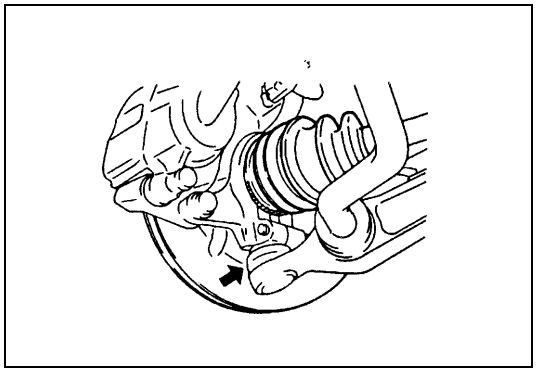

- Check front suspension arm ball joint stud dust seals for leakage, detachment, tear or any other damage.
  Replace defective boot, if any.

STEERING SYSTEM

INSPECTION

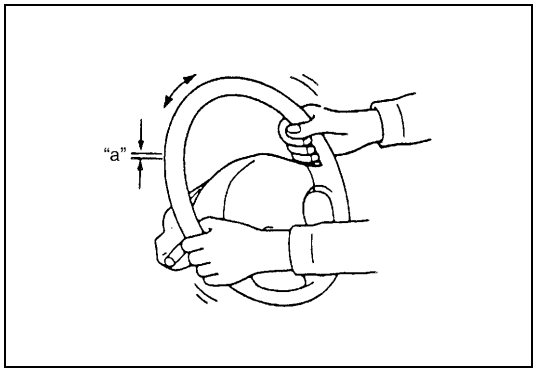

1) Check steering wheel for play and rattle, holding vehicle straight on ground.

   Steering wheel play
   “a” : 0 – 30 mm (0 – 1.1 in.)

2) Check bolts and nuts for tightness and retighten them as necessary. Repair or replace defective parts, if any.

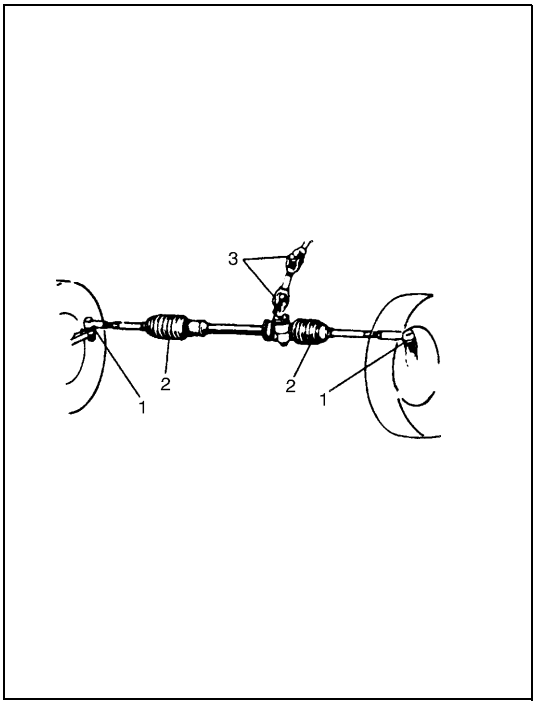

3) Check steering linkage for looseness and damage. Repair or replace defective parts, if any.
4) Check boots (1) and (2) of steering linkage and steering gear case for damage (leak, detachment, tear, etc.). If damage is found, replace defective boot with new one.
   If any dent is found on steering gear case boots, correct it to original shape by turning steering wheel to the right or left as far as it stops and holding it for a few seconds.
5) Check universal joints (3) of steering shaft for rattle and damage. If rattle or damage is found, replace defective part with a new one.
6) Check that steering wheel can be turned fully to the right and left. Repair or replace defective parts, if any.
7) If equipped with power steering system, check also, in addition to above check items, that steering wheel can be turned fully to the right and left more lightly when engine is running at idle speed than when it is stopped. Repair, if found faulty.
8) Check wheel alignment referring to Section 3A.

DRIVE SHAFT (AXLE) BOOTS / PROPELLER SHAFTS (4WD)

DRIVE SHAFT (AXLE) BOOTS INSPECTION

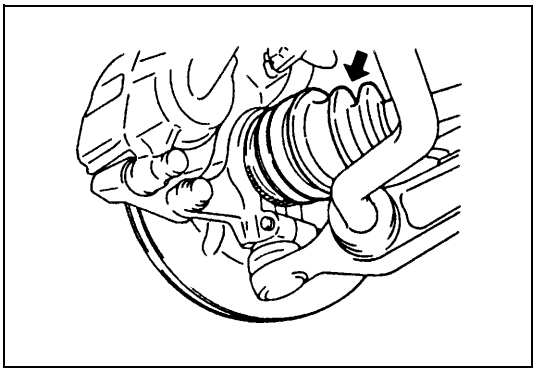

Check drive shaft boots (wheel side and differential side) for leaks, detachment, tear or other damage.
Replace boot as necessary.

PROPELLER SHAFTS (4WD) INSPECTION

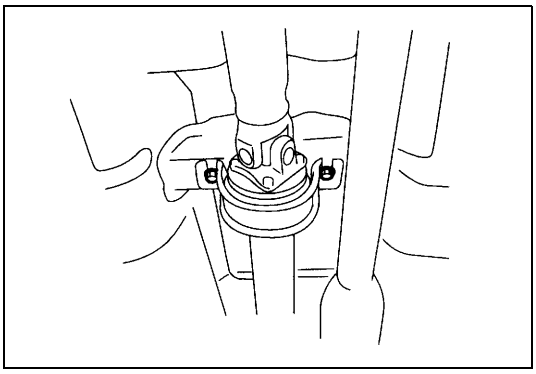

1) Check propeller shaft connecting bolts for looseness. If looseness is found, tighten to specified torque.
2) Check propeller shaft joints for wear, play and damage.
   If any defect is found, replace.
3) Check propeller shaft center support for biting of foreign matter, crack, abnormal noise and damage. If any defect is found, replace.

MANUAL TRANSMISSION OIL

INSPECTION

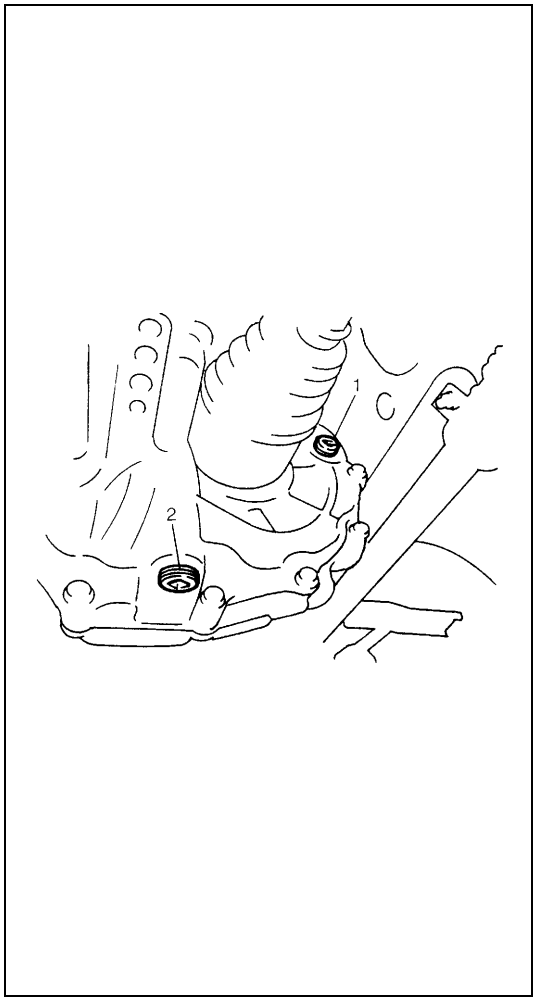

1) Inspect transmission case for evidence of oil leakage. Repair leaky point if any.
2) Make sure that vehicle is placed level for oil level check.
3) Remove oil filler/level plug (1) of transmission.
4) Check oil level.
   Oil level can be checked roughly by means of filler/level plug hole. That is, if oil flows out of level plug hole or if oil level is found up to hole when level plug is removed, oil is properly filled.
   If oil is found insufficient, pour specified oil up to level hole.
   For specified oil, refer to "MANUAL TRANSMISSION OIL CHANGE" in Section 7A.
5) Apply sealant to filler/level plug and tighten it to specified torque.

REPLACEMENT

1) Place the vehicle level and drain oil by removing drain plug (2).
2) Apply sealant to drain plug after cleaning it and tighten drain plug to specified torque.
3) Pour specified oil up to level hole.
4) Tighten filler plug to specified torque.
   For recommended oil, its amount and tightening torque data, refer to "MANUAL TRANSMISSION OIL CHANGE" in Section 7A.

AUTOMATIC TRANSMISSION FLUID

INSPECTION

1) Inspect transmission case for evidence of fluid leakage. Repair leaky point, if any.
2) Make sure that vehicle is placed level for fluid level check.

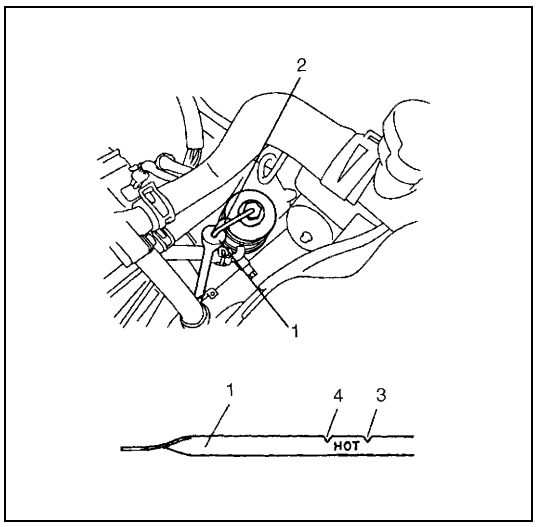

3) Pull out dipstick and check fluid level.
   For fluid level checking procedure, refer to "A/T FLUID LEVEL" in Section 7B and be sure to perform it under specified conditions. If fluid level is low, replenish specified fluid.

1. Dipstick
2. Clamp
3. FULL HOT mark
4. LOW HOT mark

REPLACEMENT

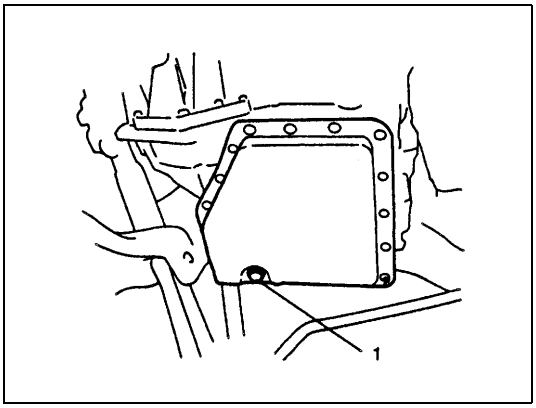

1) Inspect transmission case for evidence of fluid leakage.
   Repair leaky point, if any.
2) Make sure that vehicle is placed level for fluid level check.
3) Change fluid. For its procedure, refer to “CHANGING A/T FLUID” in Section 7B.

1. Drain plug

TRANSFER OIL (4WD) AND REAR DIFFERENTIAL OIL (4WD)

INSPECTION

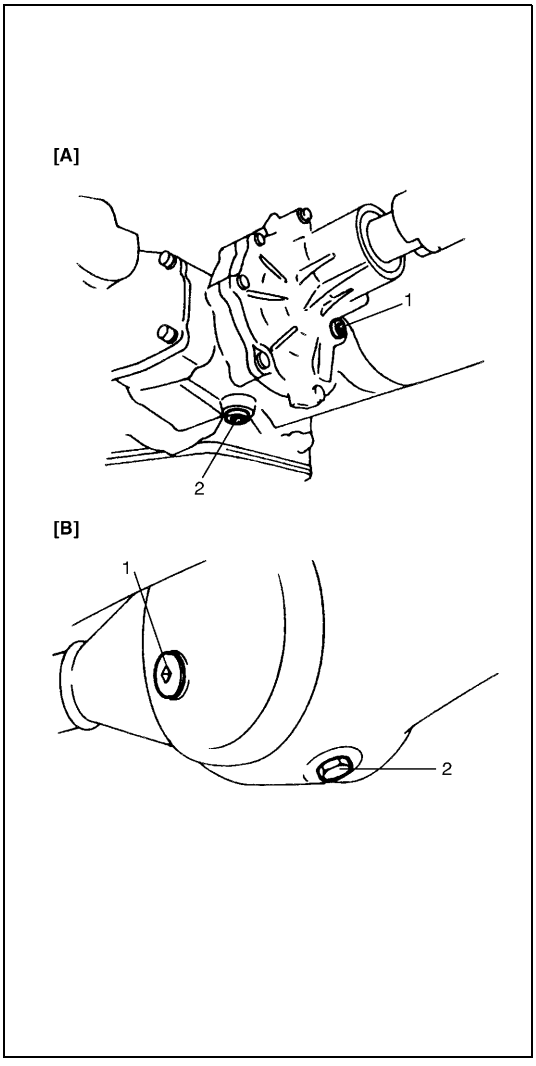

1) Check transfer case or differential for evidence of oil leakage.
   Repair leaky point if any.
2) Make sure that vehicle is placed level for oil level check.
3) Remove level plug of transfer or differential and check oil level.
   Oil level can be checked roughly by means of level plug hole. That is, if oil flows out of level plug hole or if oil level is found up to hole when level plug is removed, oil is properly filled.
   If oil is found insufficient, pour specified amount of specified oil referring to “TRANSFER OIL CHANGE” in Section 7D or “DIFFERENTIAL OIL CHANGE” in Section 7F.

[A] : Transfer
[B] : Rear differential
1. Oil level/filler plug
2. Drain plug

4) Tighten level plug to specified torque referring to “TRANSFER OIL CHANGE” in Section 7D or “CHANGING DIFFERENTIAL OIL” in Section 7F.

REPLACEMENT

Change transfer oil and differential oil with new specified oil referring to “TRANSFER OIL CHANGE” in Section 7D or “DIFFERENTIAL OIL CHANGE” in Section 7F.

ALL LATCHES, HINGES AND LOCKS

INSPECTION

DOORS

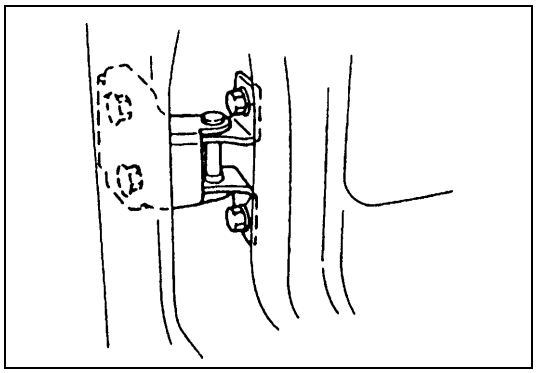

Check that each door of front, rear and back doors opens and closes smoothly and locks securely when closed.
If any malfunction is found, lubricate hinge and latch or repair door lock system.

ENGINE HOOD

Check that secondary latch operates properly (check that secondary latch keeps hood from opening all the way even when pulling hood release handle inside vehicle.) Also check that hood opens and closes smoothly and properly and hood locks securely when closed.
If any malfunction is found, lubricate hinge and latch, or repair hood lock system.

FINAL INSPECTION

WARNING:

When carrying out road tests, select a safe place where no man or no running vehicle is seen so as to prevent any accident.

SEATS

Check that seat slides smoothly and locks securely at any position. Also check that reclining mechanism of front seat back allows it to be locked at any angle.

SEAT BELT

Inspect belt system including webbing, buckles, latch plates, retractors and anchors for damage or wear.
Check that seat belt is securely locked. If “REPLACE BELT” label on front seat belt is visible, replace belt.

BATTERY ELECTROLYTE LEVEL CHECK

Check that the electrolyte level of all battery cells is between the upper and lower level lines on the case. If battery is equipped with built-in indicator, check battery condition by the indicator.

ACCELERATOR PEDAL OPERATION

Check that pedal operates smoothly without getting caught or interfered by any other part.

ENGINE START

Check engine start for readiness.

WARNING:

Before performing the following check, be sure to have enough room around the vehicle. Then, firmly apply both the parking brake and the regular brakes. Do not use the accelerator pedal. If the engine starts, be ready to turn off the ignition promptly. Take these precautions because the vehicle could move without warning and possibly cause personal injury or property damage.

On automatic transmission vehicles, try to start the engine in each select lever position. The starting motor should crank only in “P” (Park) or “N” (Neutral).
On manual transmission vehicles, place the shift lever in “Neutral,” depress clutch pedal fully any try to start.

EXHAUST SYSTEM CHECK

Check for leakage, cracks or loose supports.

CLUTCH (FOR MANUAL TRANSMISSION)

Check for the following.

- Clutch is completely released when depressing clutch pedal,
- No slipping clutch occurs when releasing pedal and accelerating.
- Clutch itself is free from any abnormal condition.

GEARSHIFT OR SELECT LEVER (TRANSMISSION)

Check gear shift or select lever for smooth shifting to all positions and for good performance of transmission in any position.
With automatic transmission equipped vehicle, also check that shift indicator indicates properly according to which position select lever is shifted to.
With automatic transmission equipped vehicle, make sure that vehicle is at complete stop when shifting select lever to “P” range position and release all brakes.

BRAKE

Foot Brake

Check the followings:

- that brake pedal has proper travel,
- that brake works properly,
- that it is free from noise,
- that vehicle does not pull to one side when brake is applied.
- and that brake do not drag.

Parking Brake

Check that lever has proper travel.

WARNING:

With vehicle parked on a fairly steep slope, make sure nothing is in the way downhill to avoid any personal injury or property damage. Be prepared to apply regular brake quickly even if vehicle should start to move.

Check to ensure that parking brake is fully effective when the vehicle is stopped on the safe slope and brake lever is pulled all the way.

STEERING

- Check to ensure that steering wheel is free from instability, or abnormally heavy feeling.
- Check that the vehicle does not wander or pull to one side.

ENGINE

- Check that engine responds readily at all speeds.
- Check that engine is free from abnormal noise and abnormal vibration.

BODY, WHEELS AND POWER TRANSMITTING SYSTEM

Check that body, wheels and power transmitting system are free from abnormal noise and abnormal vibration or any other abnormal condition.

METERS AND GAUGE

Check that speedometer, odometer, fuel meter, temperature gauge, etc. are operating accurately.

LIGHTS

Check that all lights operate properly.

WINDSHIELD DEFROSTER

Periodically check that air comes out from defroster outlet when operating heater or air conditioning.
Set mode control lever to defroster position and fan switch lever to “HI” position for this check.

RECOMMENDED FLUIDS AND LUBRICANTS

Engine oil	SE, SF, SG, SH or SJ grade (Refer to “ENGINE OIL AND OIL FILTER” in this section for engine oil viscosity.)
Engine coolant (Ethylene glycol base coolant)	“Antifreeze/Anticorrosion coolant”
Brake fluid	DOT 3
Manual transmission oil	Refer to “M/T OIL CHANGE” in Section 7A.
Transfer oil (4WD)	Refer to “TRANSFER OIL CHANGE” in Section 7D.
Differential oil (4WD)	Refer to “DIFFERENTIAL OIL CHANGE” in Section 7F.
Automatic transmission fluid	An equivalent of DEXRON®-III
Door hinges	Engine oil or water resistance chassis grease
Hood latch assembly	Engine oil or water resistance chassis grease
Key lock cylinder	Spray lubricant

SECTION 1A

HEATER AND VENTILATION

WARNING:

For vehicles equipped with Supplement Restraint (Air Bag) System

- **Service on and around the air bag system components or wiring must be performed only by an authorized SUZUKI dealer. Refer to "Air Bag System Components and Wiring Location View" under "General Description" in Section 10B in order to confirm whether you are performing service on or near the air bag system components or wiring. Please observe all WARNINGS and "Service Precautions" under "On-Vehicle Service" in Section 10B before performing service on or around the air bag system components or wiring. Failure to follow WARNINGS could result in unintentional activation of the system or could render the system inoperative. Either or these two conditions may result in severe injury.**
- **Technical service work must be started at least 90 seconds after the ignition switch is turned to the "LOCK" position and the negative cable is disconnected from the battery. Otherwise, the system may be activated by reserve energy in the Sensing and Diagnostic Module (SDM).**

NOTE:

The link mechanism of the heater varies depending on the specifications.

CONTENTS

GENERAL DESCRIPTION 1A-2
DIAGNOSIS 1A-3
DIAGNOSIS TABLE 1A-3
WIRING CIRCUIT 1A-4
ON-VEHICLE SERVICE 1A-5
HEATER UNIT 1A-5
BLOWER FAN MOTOR 1A-7
BLOWER FAN MOTOR RESISTOR 1A-8
HEATER CONTROL ASSEMBLY 1A-9
AIR INLET BOX 1A-12
VENTILATION LOUVER 1A-13
REQUIRED SERVICE MATERIALS 1A-14

GENERAL DESCRIPTION

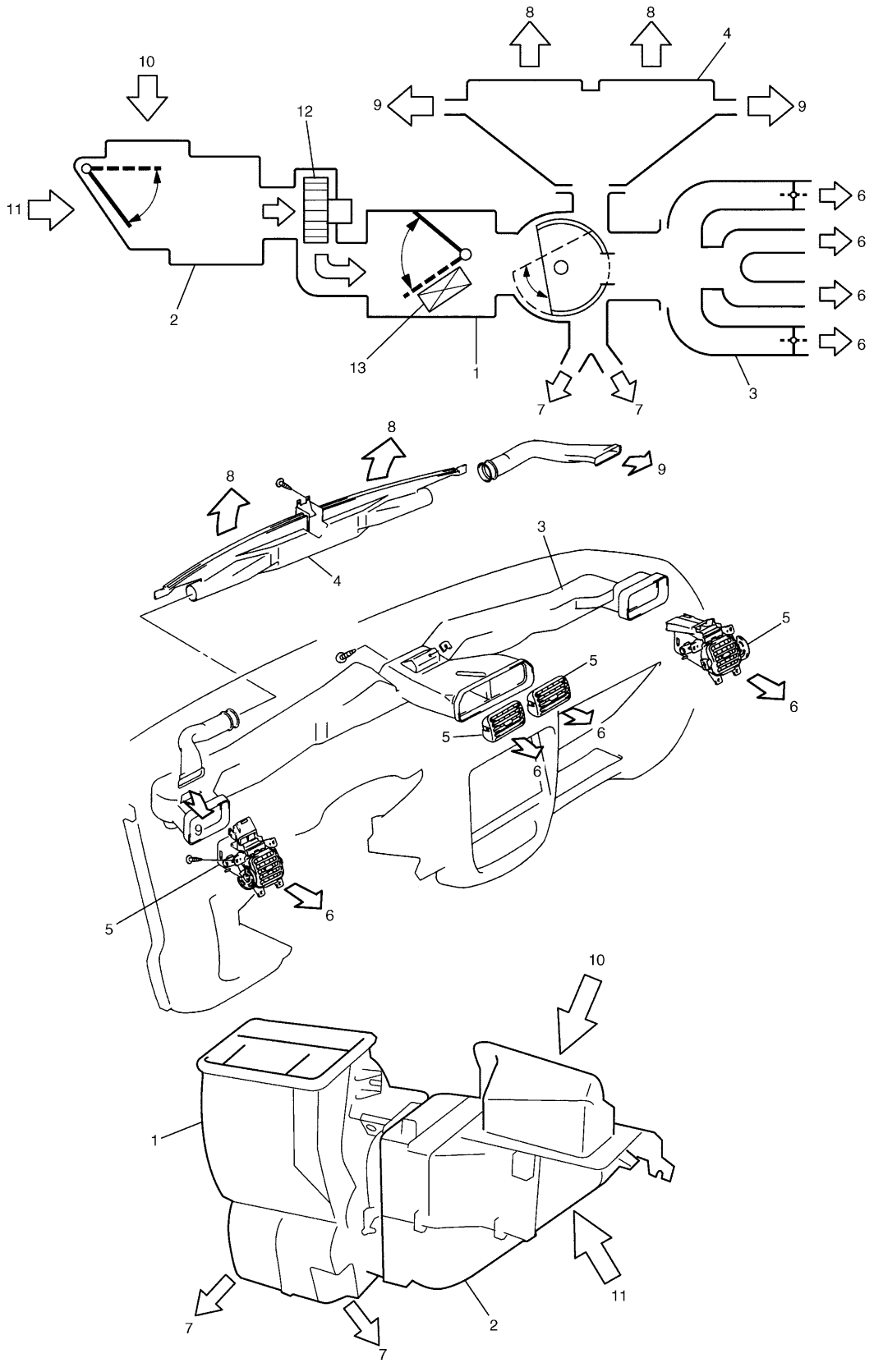

1. Heater unit	5. Ventilation louver	9. Demister air	13. Heater core
2. Air inlet box	6. Ventilation air	10. Fresh air	
3. Ventilator duct	7. Foot air	11. Recirculation air	
4. Defroster nozzle	8. Defroster air	12. Blower fan motor assembly	

DIAGNOSIS

DIAGNOSIS TABLE

Condition	Possible Cause	Correction
Heater blower fan motor won't work even when its switch is operating position.	Fuse blown	Check "HEATER" fuse, main heater fuse and check for short circuit to ground.
	Blower main relay faulty	Check blower main relay.
	Blower fan motor resistor faulty	Check resistor.
	Blower fan motor switch faulty	Check blower fan switch.
	Blower fan motor faulty	Replace motor.
	Wiring or grounding faulty	Repair as necessary.
Heater blower fan won't work when its switch is maximum position.	Blower maximum relay faulty	Check blower maximum relay.
	Blower fan motor switch faulty	Check blower fan switch.
	Wiring or grounding faulty	Check wiring, grounding and repair as necessary.
Incorrect temperature output.	Control cables broken or binding	Check cables.
	Temperature control lever faulty	Check control lever.
	Position of control cable clamp is faulty	Check and adjustment.
	Temperature door assembly broken	Repair temperature door assembly.
	Air ducts clogged	Repair air ducts.
	Heater core leaking or clogged	Replace core.
	Heater hoses leaking or clogged	Replace hoses.
	Thermostat faulty	Check thermostat by referring to Section 6B.
When mode control lever is changed, air outlet port is not changed or lever position disagree with air outlet port.	Control cable broken or binding	Check cable.
	Mode control lever faulty	Check control lever.
	Position of control cable clamp is faulty	Check and adjust clamp position.Check and adjustment.
	Air damper broken	Repair damper.
	Air ducts leaking or clogged	Repair air ducts.

WIRING CIRCUIT

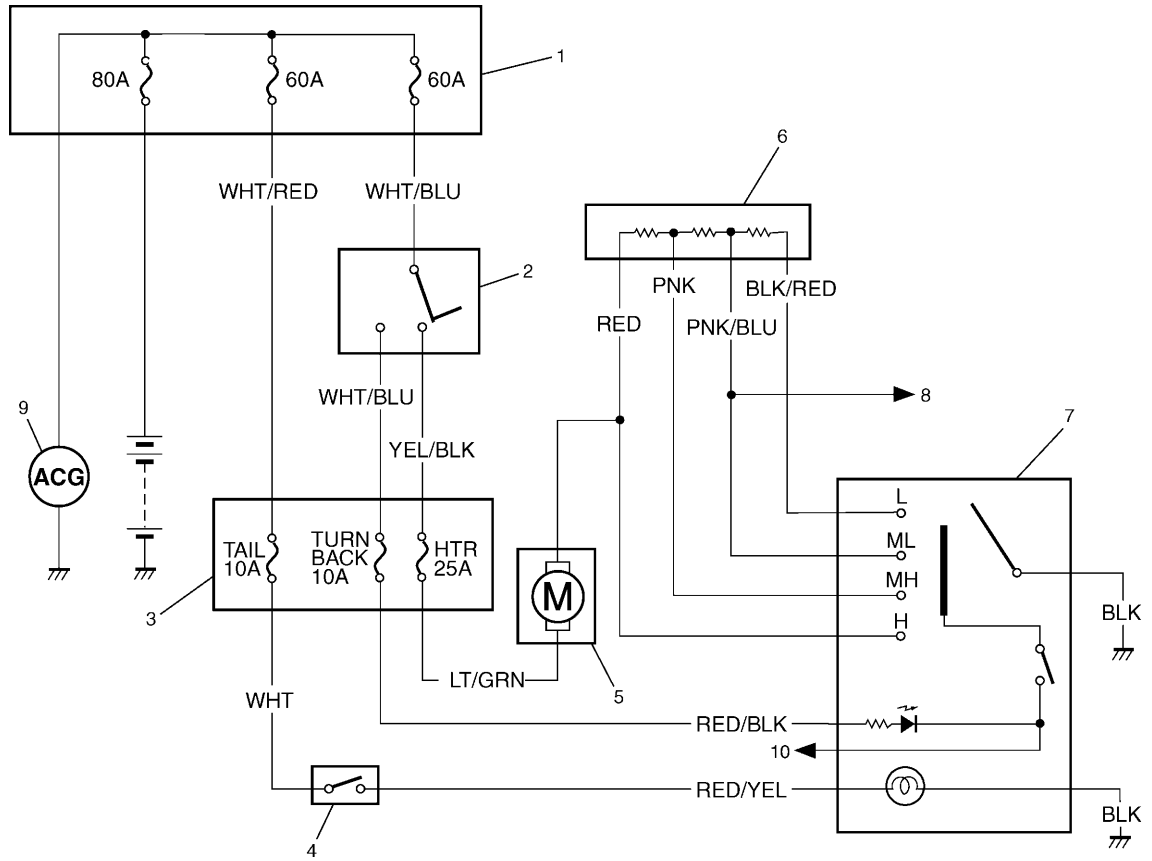

1. Main fuse box	4. Lighting switch	7. Blower fan switch	10. To ECM
2. Ignition switch	5. Blower fan motor	8. To ECM (idle up signal)	
3. Circuit fuse box	6. Blower fan motor resistor	9. Generator	

ON-VEHICLE SERVICE

HEATER UNIT

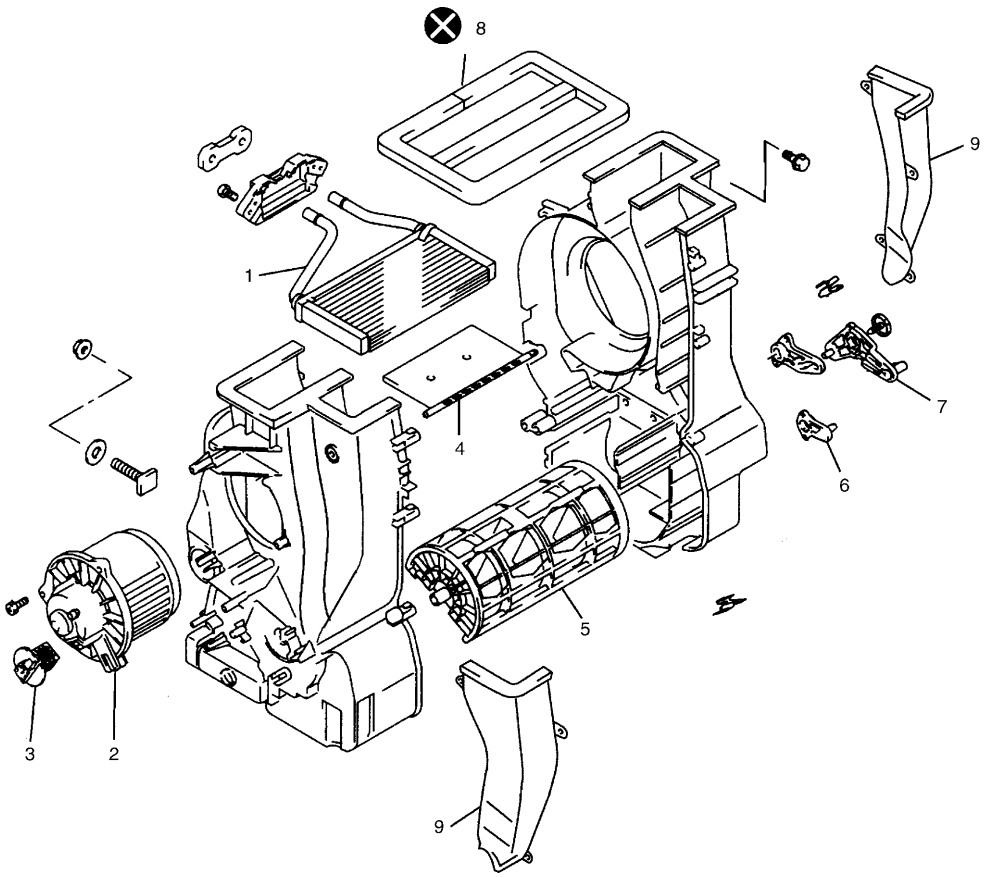

1. Heater core	4. Temperature door assembly	7. Temperature lever assembly	⊗ Do not reuse
2. Blower fan motor assembly	5. Air outlet control door assembly	8. Packing	
3. Blower fan motor resistor	6. Air outlet control lever assembly	9. Demistor air outlet case	

REMOVAL

1) Disconnect negative (–) cable at battery.

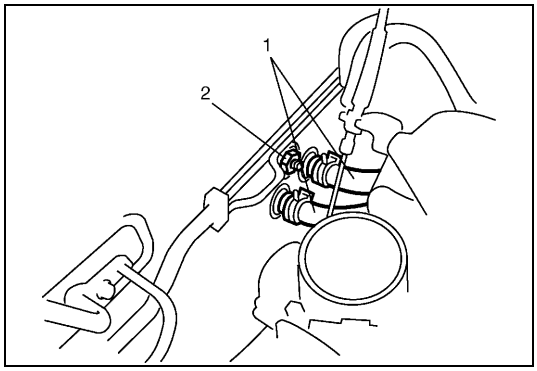

2) Drain engine coolant and disconnect heater hoses (1) from heater unit.
3) Remove heater unit mounting nut (2).
4) Remove instrument panel by referring to “INSTRUMENT PANEL” in Section 9.
5) Disconnect blower motor and resistor couplers from heater unit.

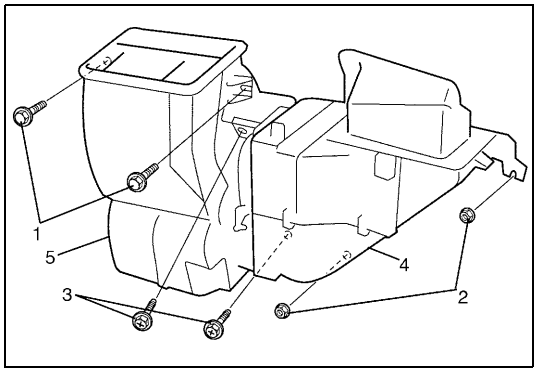

6) Remove bolts (1), nuts (2) and screws (3) as shown.
7) Remove cooling unit (4) and heater unit (5) from vehicle.

INSTALLATION

Reverse removal procedure to install heater unit noting the following instructions.

- When installing each part, be careful not to catch any cable or wiring harness.
- Adjust heater control cable by referring to “HEATER CONTROL LEVER ASSEMBLY” in this section.
- Fill engine coolant to radiator.

BLOWER FAN MOTOR

REMOVAL

1) Disconnect negative (–) cable at battery.
2) Remove steering column hole cover.
3) Remove brake and clutch pedals bracket from vehicle body.

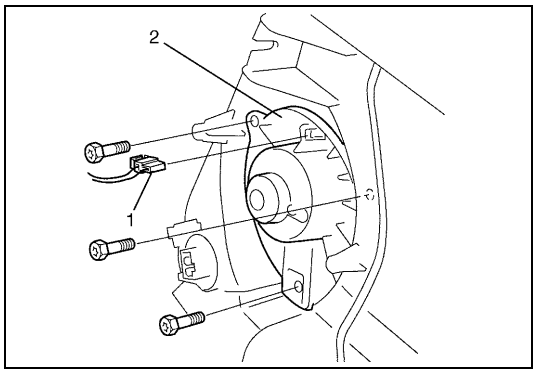

4) Disconnect blower motor coupler (1).
5) Remove blower fan motor (2).

INSPECTION

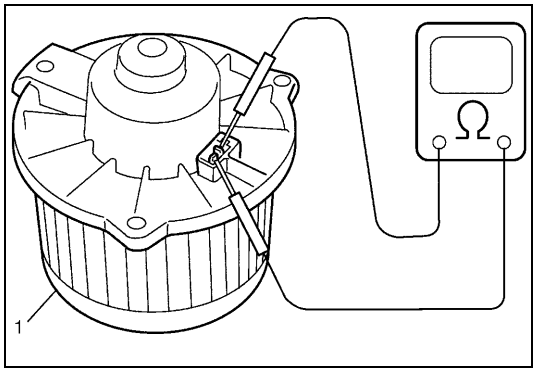

1) Check continuity between two terminal as shown.
   If check results are no continuity, replace blower fan motor assembly (1).

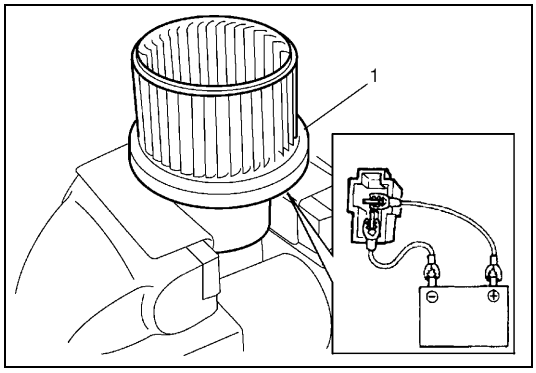

2) Check operate and current.
   a) Fix blower fan motor assembly (1) by using vise.
   b) Connect battery to blower fan motor assembly (1) as shown.
   c) Check that there is smoothly operates and no noise.
   d) Check that ammeter indicates specified current.
      If measure current is incorrect, replace blower fan motor.

Blower fan specified current at 12V
: 18 A maximum

INSTALLATION

Reverse removal procedure for installation.

BLOWER FAN MOTOR RESISTOR

REMOVAL

1) Disconnect negative (–) cable at battery.
2) Disconnect blower fan motor resistor coupler.
3) Remove blower fan motor resistor (1) as shown.

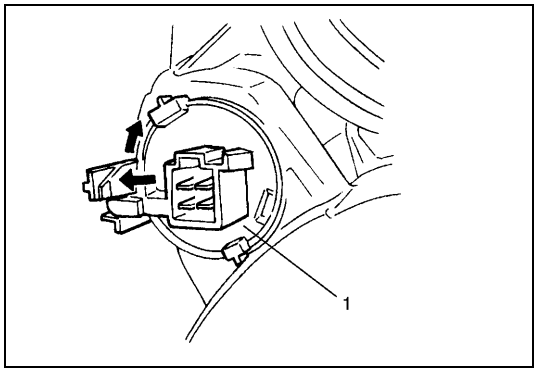

INSPECTION

Measure each terminal-to-terminal resistance on resistor
If measured resistance is incorrect, replace blower motor resistor.

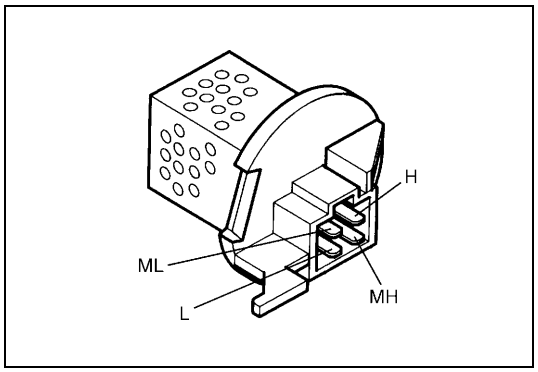

Blower fan motor resistor resistance
H–MH : approximately 0.5 Ω at 25°C (77°F)
H–ML : approximately 1.5 Ω at 25°C (77°F)
H–L : approximately 3.0 Ω at 25°C (77°F)

INSTALLATION

Reverse removal procedure for installation.

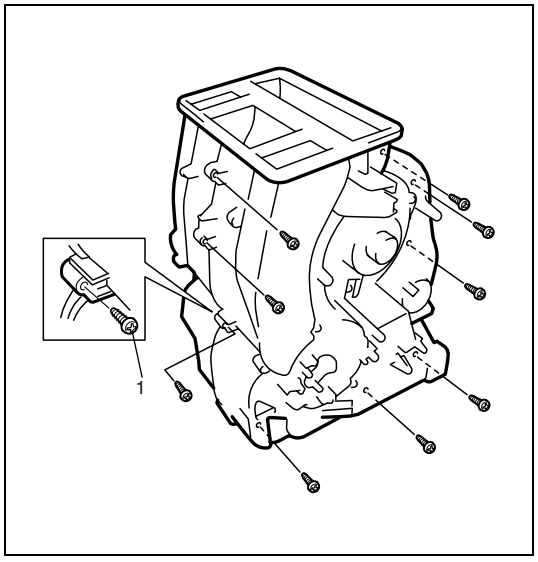

CAUTION:
When the heater unit is disassembled and reassembled, locking force of the heater case lock may reduce. In such a case, tighten the heater case with a tapping screw (1) of M4 x L16 as shown in the figure, or air may leak from its joint section.

HEATER CONTROL ASSEMBLY

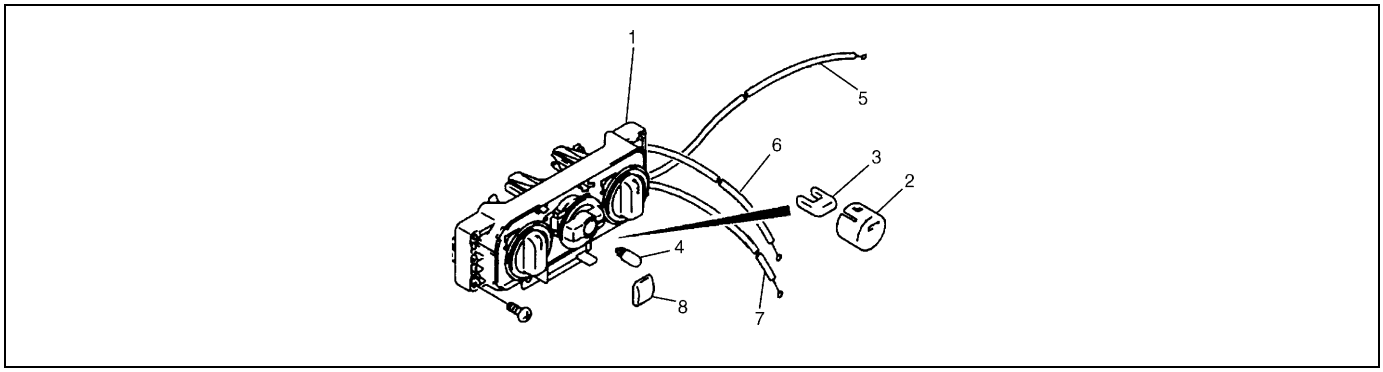

1. Heater control assembly	3. A/C switch LED (if equipped)	5. Fresh air control cable	7. Temperature control cable
2. A/C switch knob (if equipped)	4. Bulb	6. Air outlet control cable	8. Heater control knob

REMOVAL

1) Disconnect negative (–) cable at battery.
2) Remove steering column hole cover.

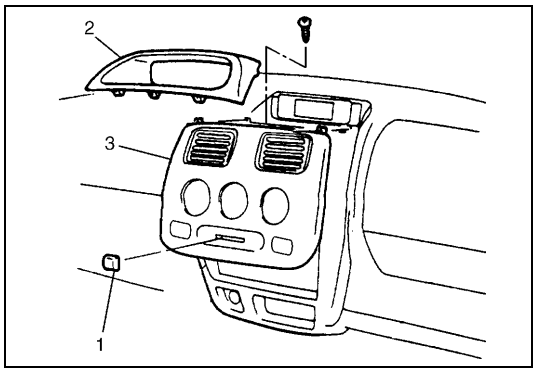

3) Remove heater control knob (1), center upper garnish (2), center lower garnish (3) and glove box.

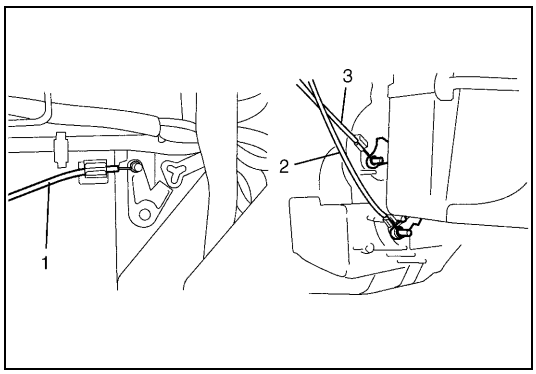

4) Disconnect air outlet control (3), temperature control (2) and fresh air control (1) cables.

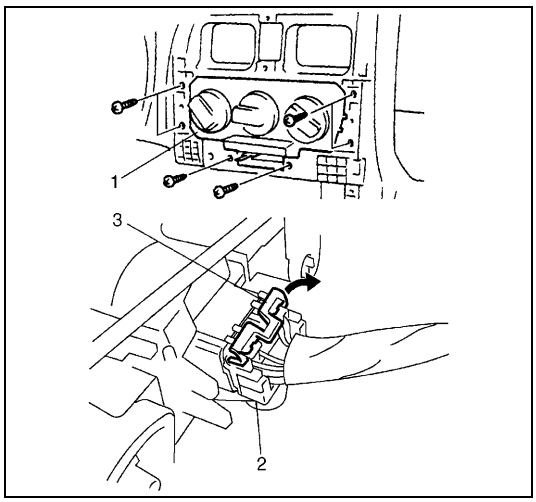

5) Remove heater control assembly (1), and then disconnect blower fan switch connector (2) after unlock locking part (3) as shown.

INSTALLATION

1) Reverse removal procedure for installation.
2) Adjust the following items.

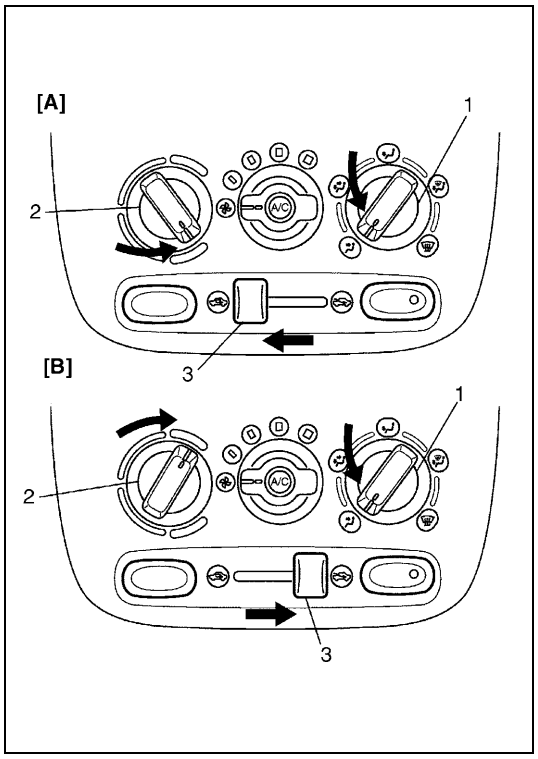

a) Move air outlet control dial (1), temperature control dial (2) and fresh air control lever (3) fully in arrow direction as shown in figure.

[A] : For LH model
[B] : For RH model

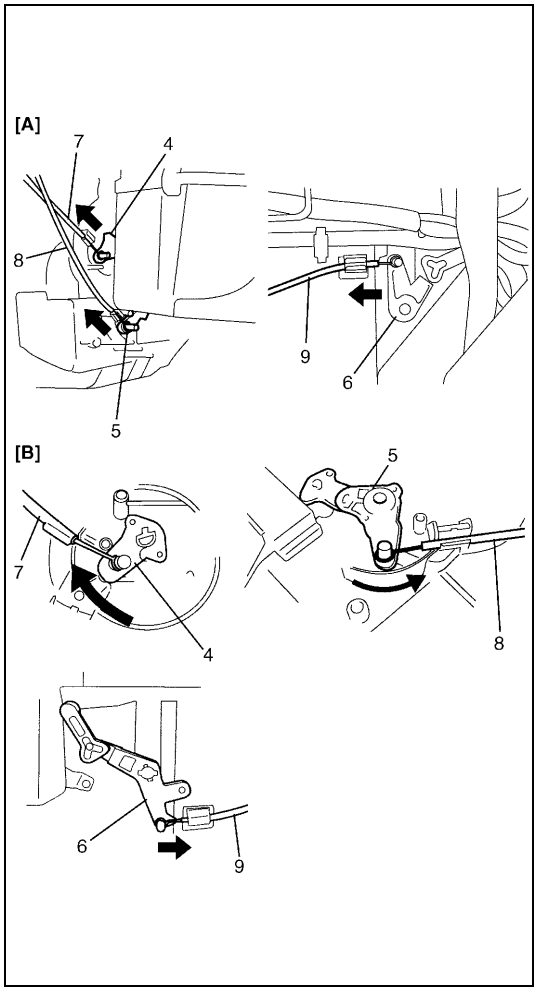

b) Push air outlet lever (4), temperature lever (5) and door link (6) fully in arrow direction and fix air outlet control cable (7), temperature control cable (8) and fresh air control cable (9) with clamp in position as shown in figure.

NOTE:

After installing control cables, be sure that control levers move smoothly and stop at proper position.

[A] : For LH model
[B] : For RH model

INSPECTION

Check blower fan switch for each terminal-to terminal continuity.

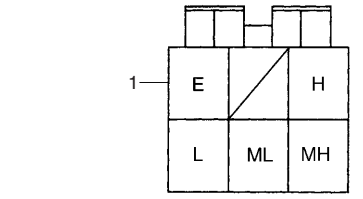

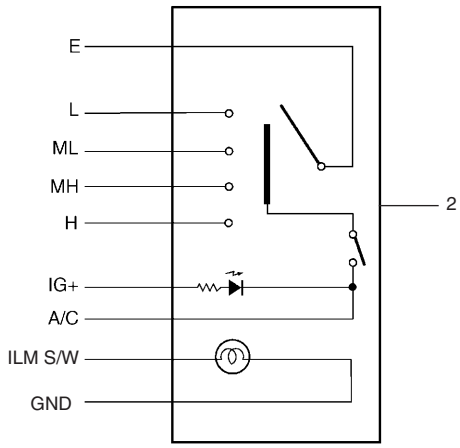

Circuit table of blower fan switch

POSITION \ TERMINAL	E	L	ML	MH	H
OFF	○				
L	○	○			
ML	○		○		
MH	○			○	
H	○				○

1. Terminal arrangement of blower fan switch
2. Blower fan switch

AIR INLET BOX

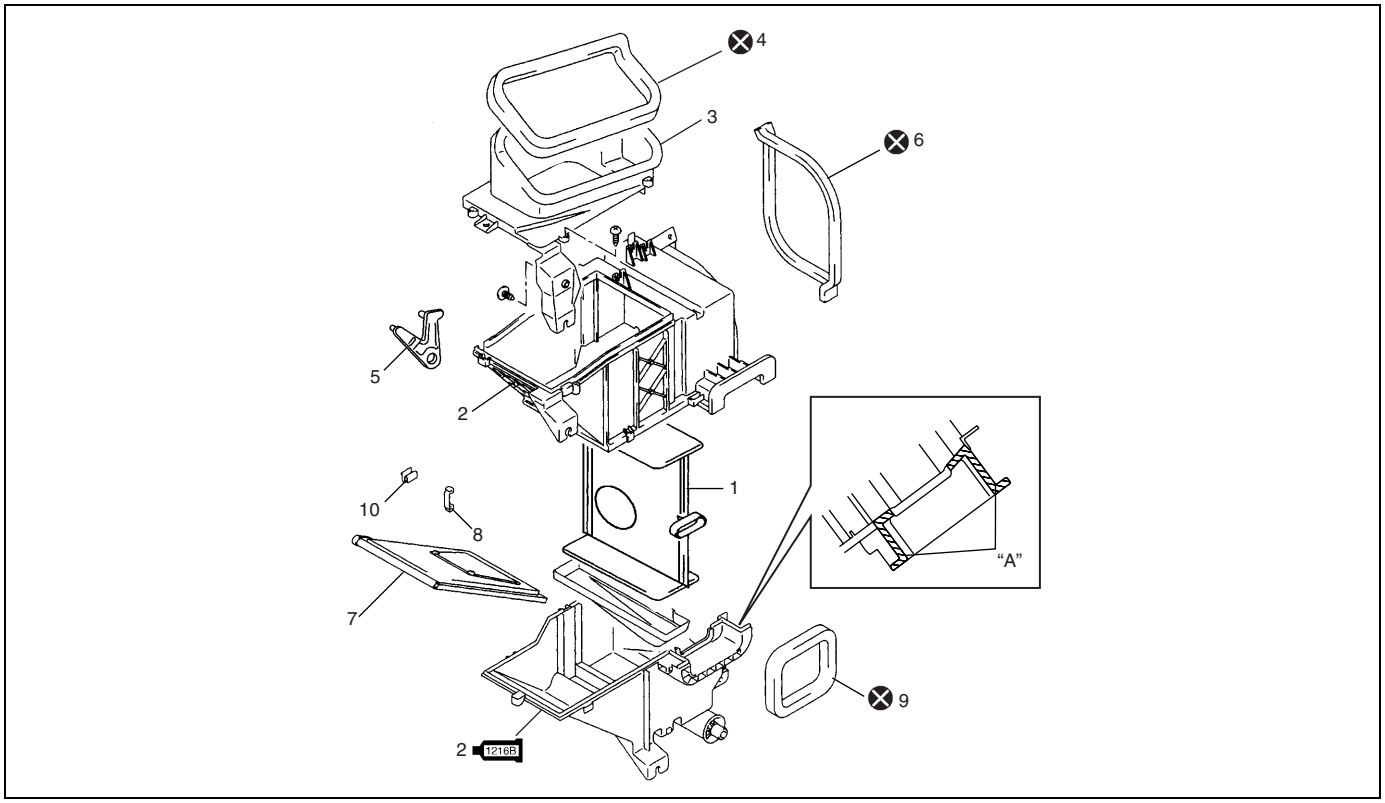

	1. Resistance board	4. Fresh air duct packing	7. Air inlet door	10. Cable clamp
1216B	2. Air inlet case : Apply sealant 99000 - 31160 to hatched part "A"	5. Door link	8. Clip	: Do not reuse
	3. Fresh air duct case	6. Heater unit packing	9. Dash packing	

REMOVAL

NOTE:

If vehicle equipped with A/C, refer to "COOLING UNIT" in Section 1B.

1) Disconnect negative (–) cable at battery.

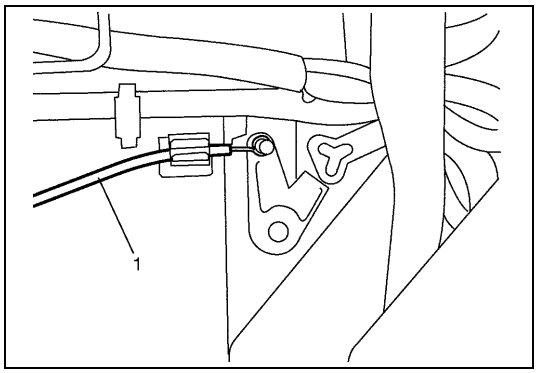

2) Remove glove box.
3) Disable air bag system by referring to "DISABLING AIR BAG SYSTEM" in Section 10B. (if equipped)
4) Disconnect fresh air control cable (1) from air inlet box.

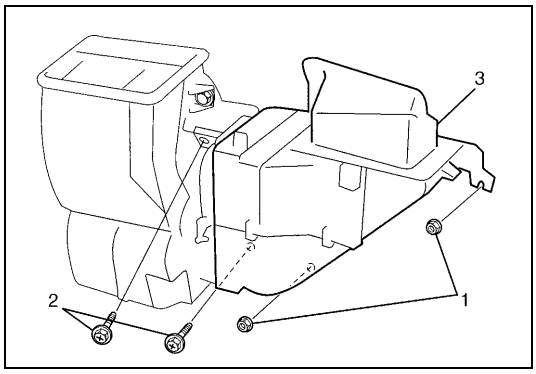

5) Remove air inlet box mounting nuts (1) and screws (2).
6) Remove air inlet box (3).

INSTALLATION

Reverse removal procedure to install air inlet box noting the following instructions.

- Adjust fresh air control cable referring to “INSTALLATION” under “HEATER CONTROL ASSEMBLY” in this section.
- Enable air bag system by referring to “ENABLING AIR BAG SYSTEM” in Section 10B. (if equipped)

VENTILATION LOUVER

REMOVAL

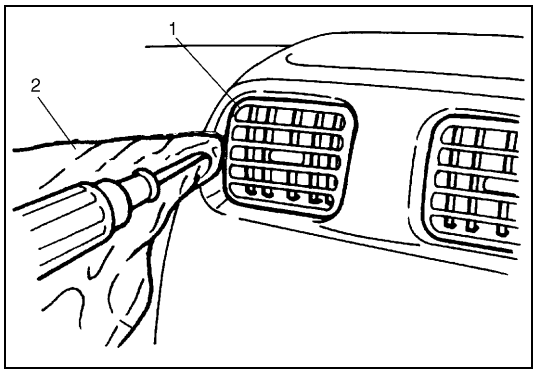

1) Remove ventilation louver (1) as shown in figure.

2: Rag

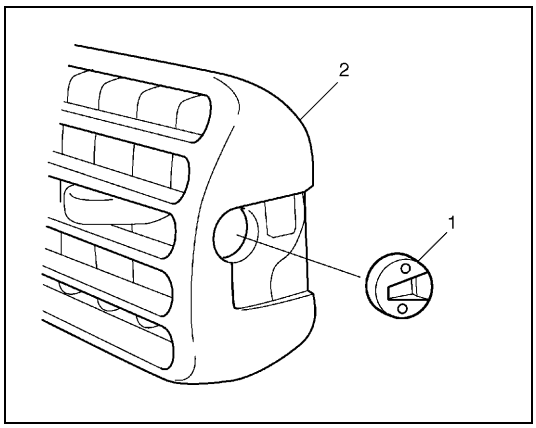

2) Remove ventilation louver holder (1) from ventilation louver (2).

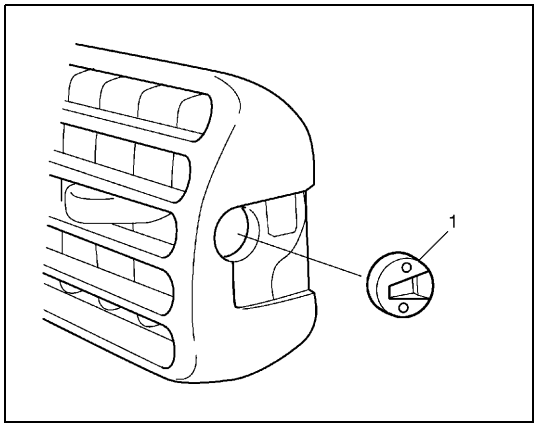

INSTALLATION

Reverse removal procedure to install ventilation louver noting the following instruction.

- Be sure to install ventilation louver holder (1) to proper direction as shown.

REQUIRED SERVICE MATERIALS

Material	Recommended SUZUKI product (Part Number)	Use
Sealant	SUZUKI BOND No. 1216B 99000 – 31160	• Air inlet box

SECTION 1B

AIR CONDITIONING (OPTIONAL)

WARNING:

For vehicles equipped with Supplemental Restraint (Air Bag) System :

- **Service on and around the air bag system components or wiring must be performed only by an authorized SUZUKI dealer. Refer to "Air Bag System Components and Wiring Location View" under "General Description" in air bag system section in order to confirm whether you are performing service on or near the air bag system components or wiring. Please observe all WARNINGS and "Service Precautions" under "On-Vehicle Service" in air bag system section before performing service on or around the air bag system components or wiring. Failure to follow WARNINGS could result in unintentional activation of the system or could render the system inoperative. Either of these two conditions may result in severe injury.**
- **Technical service work must be started at least 90 seconds after the ignition switch is turned to the "LOCK" position and the negative cable is disconnected from the battery. Otherwise, the system may be activated by reserve energy in the Sensing and Diagnostic Module (SDM).**

CAUTION:

The air conditioning system of this vehicle uses refrigerant HFC-134a (R-134a).
None of refrigerant, compressor oil and component parts is interchangeable between two types of A/C : one using refrigerant HFC-134a (R-134a) and the other using refrigerant CFC-12 (R-12).
Be sure to check which refrigerant is used before any service work including inspection and maintenance. For identification between these two types, refer to "REFRIGERANT TYPE" in this section.
When replenishing or changing refrigerant and compressor oil and when replacing parts, make sure that the material or the part to be used is appropriate to the A/C installed in the vehicle being serviced. Use of incorrect one will result in leakage of refrigerant, damage in parts or other faulty condition.

NOTE:

For basic servicing method of the air conditioning system that is not described in this section, refer to "AIR CONDITIONING BASIC MANUAL (Part number : 99520-02130)".

CONTENTS

GENERAL DESCRIPTION 1B-3
REFRIGERANT CIRCULATION 1B-3
REFRIGERANT TYPE 1B-3
MAJOR COMPONENTS AND LOCATION 1B-4
DIAGNOSIS 1B-5
GENERAL DIAGNOSIS TABLE 1B-5
ABNORMAL NOISE DIAGNOSIS 1B-7
QUICKLY CHECKING OF REFRIGERANT CHARGE 1B-9
PERFORMANCE DIAGNOSIS 1B-10
PERFORMANCE DIAGNOSIS TABLE .. 1B-12
DETAIL DIAGNOSIS TABLE (AMBIENT TEMPERATURE AT 30°C (86°F)) 1B-13
COMPRESSOR DRIVE BELT 1B-15
ELECTRICAL DIAGNOSIS 1B-16
WIRING DIAGRAM 1B-16
A/C SYSTEM INSPECTION OF ECM AND ITS CIRCUITS 1B-17
REFRIGERANT RECOVERY, EVACUATING AND CHARGING 1B-20
OPERATION PROCEDURE FOR REFRIGERANT CHARGING 1B-20
RECOVERY 1B-21
REPLENISHING COMPRESSOR OIL 1B-21
EVACUATING 1B-22
EVACUATING PROCEDURE 1B-22
CHECKING SYSTEM FOR PRESSURE LEAKS 1B-23
CHARGING 1B-24
CHARGING PROCEDURE 1B-24

REMOVING MANIFOLD GAUGE SET 1B-26
LEAK TEST 1B-26
LIQUID LEAK DETECTORS 1B-26
ON-VEHICLE SERVICE 1B-27
SERVICE PRECAUTION 1B-27
REFRIGERANT LINE 1B-27
HANDLING REFRIGERANT HFC-134a (R-134a) 1B-28
REFRIGERANT RECOVERY 1B-28
REFRIGERANT CHARGE 1B-28
CONDENSER ASSEMBLY 1B-28
RECEIVER/DRYER 1B-30
RADIATOR/CONDENSER COOLING FAN MOTOR 1B-31
COOLING UNIT (EVAPORATOR) 1B-32
A/C EVAPORATOR TEMPERATURE SENSOR 1B-34
EXPANSION VALVE 1B-34
A/C REFRIGERANT PRESSURE SWITCH 1B-35
A/C SWITCH 1B-36
RADIATOR/CONDENSER COOLING FAN MOTOR RELAY No.1, No.2 and No.3 ..... 1B-36
COMPRESSOR 1B-36
MAGNET CLUTCH 1B-38
LIP TYPE SEAL 1B-41
REQUIRED SERVICE MATERIAL 1B-43
SPECIAL TOOL 1B-44

GENERAL DESCRIPTION

REFRIGERANT CIRCULATION

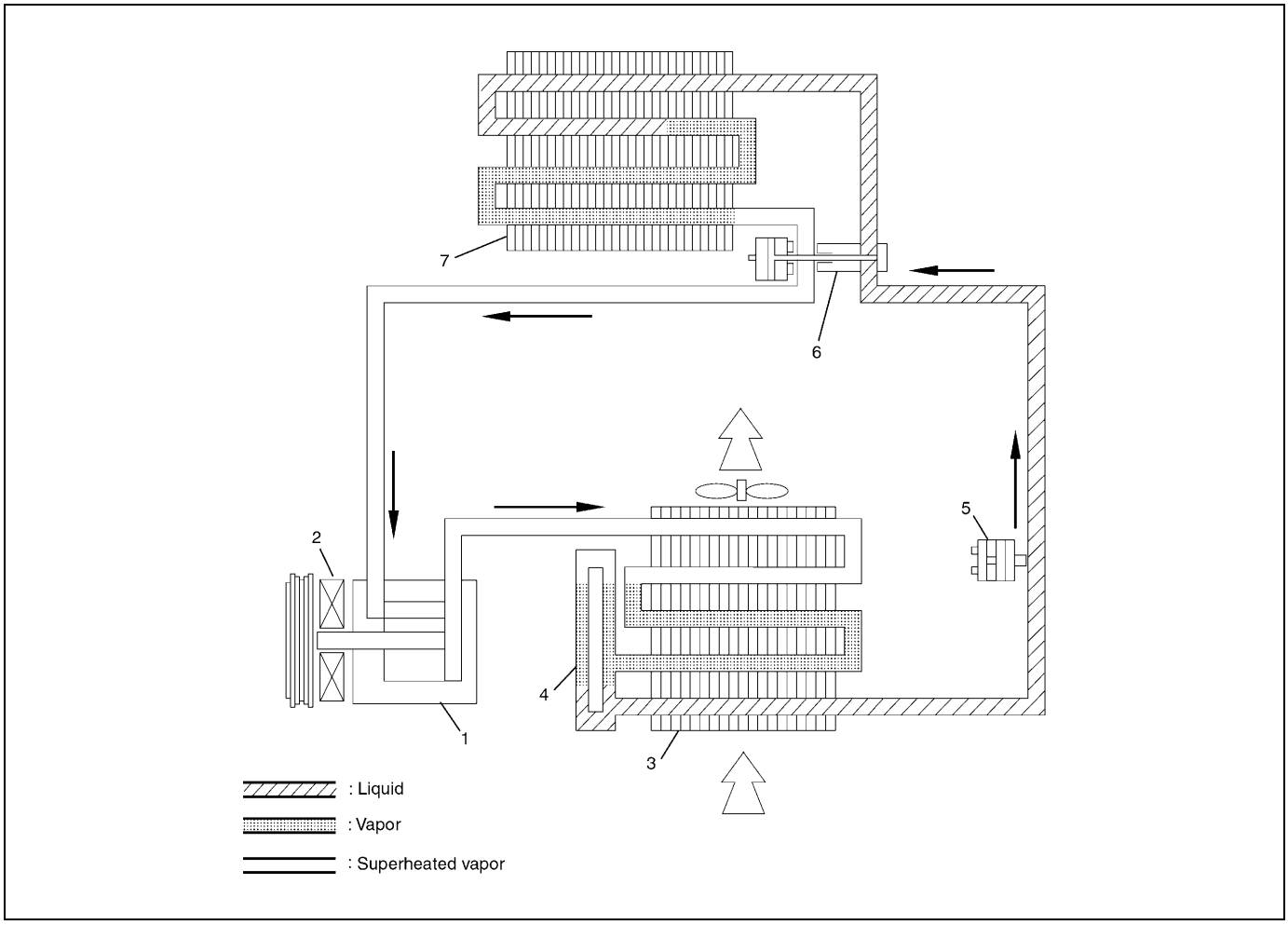

1. Compressor	4. Receiver/dryer	7. Evaporator
2. Magnet clutch	5. A/C refrigerant pressure switch	
3. Condenser assembly	6. Expansion valve	

REFRIGERANT TYPE

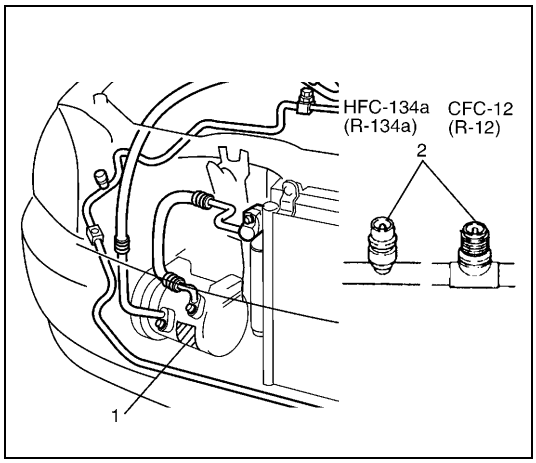

Whether the A/C in the vehicle being serviced uses HFC-134a (R-134a) or CFC-12 (R-12) is indicated on compressor label (1). Also, it can be checked by the shape of the service (charge) valve (2).

MAJOR COMPONENTS AND LOCATION

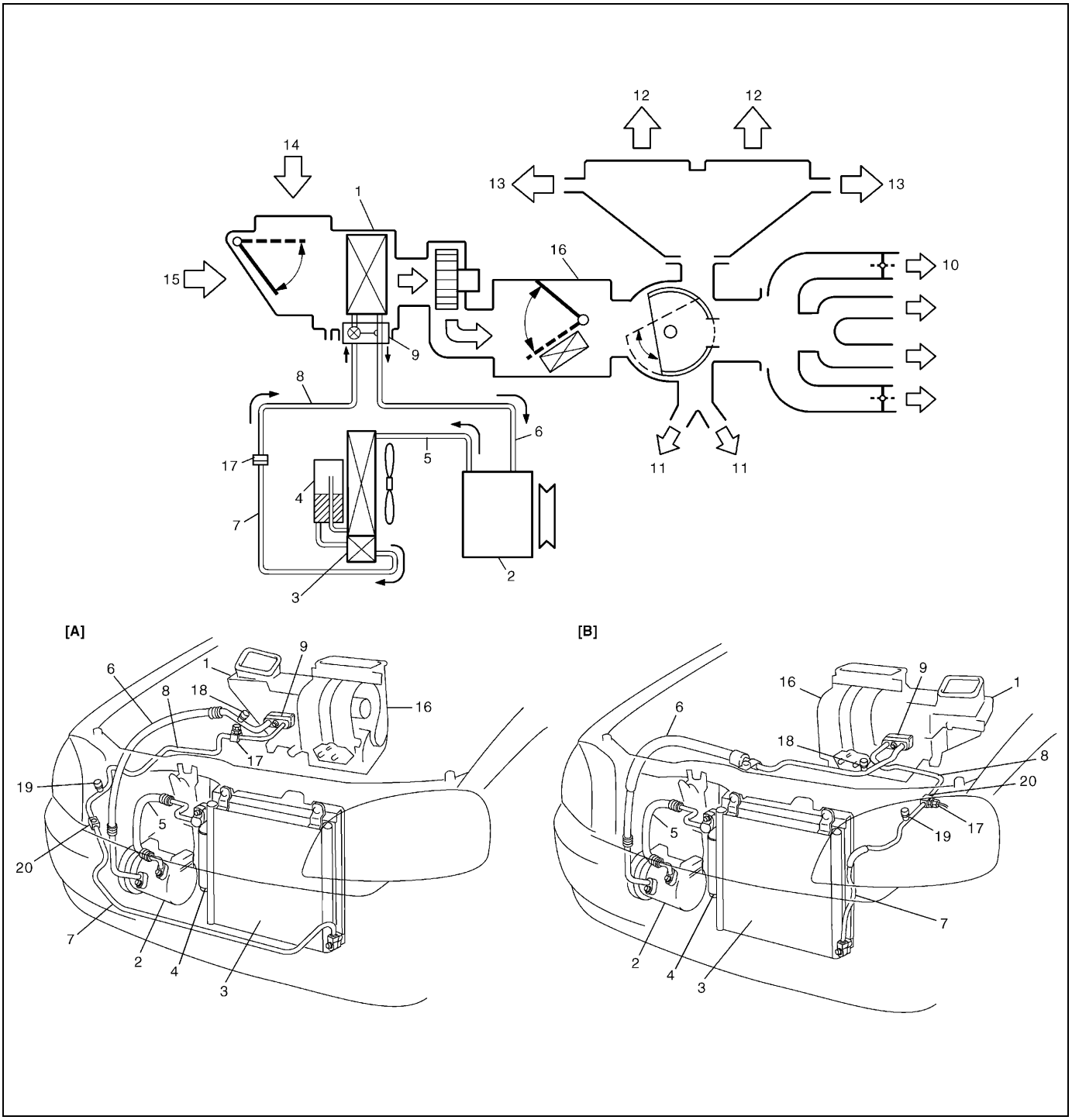

1. Cooling unit	7. Condenser outlet pipe	13. Demister air	19. High pressure charge valve
2. Compressor	8. Liquid pipe	14. Fresh air	20. Sight glass
3. Condenser assembly	9. Expansion valve	15. Recirculation air	[A] : LH model
4. Receiver/dryer	10. Ventilation air	16. Heater unit	[B] : RH model
5. Discharge hose	11. Foot air	17. A/C refrigerant pressure switch	
6. Suction pipe	12. Defroster air	18. Low pressure charge valve	

DIAGNOSIS

GENERAL DIAGNOSIS TABLE

Condition	Possible Cause	Correction
Cool air won't come out (A/C system won't operative)	No refrigerant	Perform recover, evacuation and charging.
	Fuse blown	Check fuses in circuit fuse and main fuse boxes, and check short circuit to ground.
	A/C switch faulty	Check A/C switch.
	Blower fan switch faulty	Check blower fan switch referring to Section 1A.
	A/C evaporator temperature sensor faulty	Check A/C evaporator temperature sensor.
	A/C refrigerant pressure switch faulty	Check A/C refrigerant pressure switch.
	Wiring or grounding faulty	Repair as necessary.
	ECT sensor faulty	Check ECT sensor referring to Section 6E1.
	ECM and its circuit faulty	Check ECM and its circuit referring to Section 6E1.
Cool air won't come out (A/C compressor won't operative)	ECM faulty	Check ECM and its circuit referring to Section 6E1.
	Magnet clutch faulty	Check magnet clutch.
	Compressor drive belt loosen or broken	Adjust or replace drive belt.
	Compressor faulty	Check compressor.
	Compressor thermal switch faulty	Check compressor thermal switch
Cool air won't come out (A/C condenser cooling fan motor won't operative)	Fuse blown	Check fuses in circuit fuse and main fuse boxes, and check short circuit to ground.
	Wiring or grounding faulty	Repair as necessary.
	Radiator/condenser cooling fan motor relay faulty	Check radiator/condenser cooling fan motor relay No.1, No.2 and No.3.
	Radiator/condenser cooling fan motor faulty	Check radiator/condenser cooling fan motor.
	ECM faulty	Check ECM and its circuit referring to Section 6E1.
Cool air won't come out (Blower fan motor won't operative)	Fuse blown	Check "HTR" fuse in circuit fuse box and main fuses, and check short circuit to ground.
	Blower fan motor resistor faulty	Check blower fan motor resistor to Section 1A.
	Blower fan switch faulty	Check blower fan switch referring to Section 1A.
	Wiring or grounding faulty	Repair as necessary.
	Blower fan motor faulty	Check blower fan motor referring to Section 1A.

Condition	Possible Cause	Correction
Cool air won't come out or insufficient cooling (A/C system normal operative)	Insufficient or excessive charge of refrigerant	Check charge of refrigerant and system for leaks.
	Condenser clogged	Check condenser.
	A/C evaporator clogged or frosted	Check A/C evaporator and A/C evaporator temperature sensor.
	A/C evaporator temperature sensor faulty	Check A/C evaporator temperature sensor.
	Expansion valve faulty	Check expansion valve.
	Receiver/dryer clogged	Check receiver/dryer.
	Compressor drive belt loosen or broken	Adjust or replace drive belt.
	Magnetic clutch faulty	Check magnetic clutch.
	Compressor faulty	Check compressor.
	Air in A/C system	Replace dryer, and perform evacuation and charging.
	Air leaking from cooling unit or air duct	Repair as necessary.
	Heater and ventilation system faulty	Check air inlet box (cooling unit), heater control assembly and heater unit referring to Section 1A.
	Blower fan motor faulty	Check blower fan motor referring to Section 1A.
	Excessive compressor oil existing in A/C system	Pull out compressor oil in A/C system circuit, and check compressor.
Cool air won't come out only intermittently	Wiring connection faulty	Repair as necessary.
	Expansion valve faulty	Check expansion valve.
	Excessive moisture in A/C system	Replace dryer, and perform evacuation and charging.
	Magnetic clutch faulty	Check magnetic clutch.
	Excessive charge of refrigerant	Check charge of refrigerant.
Cool air comes out only at high speed	Condenser clogged	Check condenser.
	Insufficient charge of refrigerant	Check charge of refrigerant.
	Air in A/C system	Replace dryer, and perform evacuation and charging.
	Compressor drive belt loosen or broken	Adjust or replace drive belt.
	Compressor faulty	Check compressor.
Cool air won't come out only at high speed	Excessive charge of refrigerant	Check charge of refrigerant.
	A/C evaporator frosted	Check A/C evaporator and A/C evaporator temperature sensor.
Insufficient velocity of cooled air	A/C evaporator clogged or frosted	Check A/C evaporator and A/C evaporator temperature sensor.
	Air leaking from cooling unit or air duct	Repair as necessary.
	Blower fan motor faulty	Check blower fan motor referring to Section 1A.
	Wiring or grounding faulty	Repair as necessary.

ABNORMAL NOISE DIAGNOSIS

There are various types of noise, ranging from those produced in the engine compartment to those from the passenger compartment, also from rumbling noises to whistling noises.

ABNORMAL NOISE FROM COMPRESSOR

Condition	Possible Cause	Correction
During compressor operation, a rumbling noise is heard proportional to engine revolutions.	Inadequate clearance in piston area (piston or swash-plate)	Repair or replace compressor as necessary.
A loud noise is heard at a certain rpm, disproportionately to engine revolution.	Loose or faulty compressor drive belt	Adjust drive belt tension, or replace drive belt.
	Loose compressor mounting bolts	Retighten mounting bolts.
A loud rattle is heard at low engine rpm.	Loose compressor clutch plate bolt	Retighten clutch plate bolt.
		Replace compressor if it was operated in this condition for a long time.

ABNORMAL NOISE FROM MAGNETIC CLUTCH

Condition	Possible Cause	Correction
A rumbling noise is heard when compressor is not operating.	Worn or damaged bearings	Replace magnet clutch assembly.
A chattering noise is heard when compressor is engaged.	Faulty clutch clearance (excessive)	Adjust clutch clearance.
	Worn clutch friction surface	Replace magnet clutch assembly.
	Compressor oil leaked from lip type seal, contaminating the friction surface	Replace compressor body assembly.

ABNORMAL NOISE FROM TUBING

Condition	Possible Cause	Correction
A droning noise is heard inside vehicle, but not particularly noticeable in engine compartment.	Faulty tubing clamps	Reposition clamps or increase the number of clamps.
	Resonance caused by pulsation from variations in refrigerant pressure	Attach a silencer to tubing, or modify its position and length.

ABNORMAL NOISE FROM CONDENSER

Condition	Possible Cause	Correction
Considerable vibration in condenser.	Resonance from condenser bracket and body	Firmly insert a silencer between condenser bracket and body.

ABNORMAL NOISE FROM CRANKSHAFT PULLEY

Condition	Possible Cause	Correction
A large rattling noise is heard at idle or sudden acceleration.	Loosen crankshaft pulley bolt	Retighten bolt.

ABNORMAL NOISE FROM TENSION PULLEY

Condition	Possible Cause	Correction
Clattering noise is heard from pulley.	Worn or damaged bearing	Replace tension pulley.
Pulley cranks upon contact.	Cracked or loose bracket	Replace or retighten bracket.

ABNORMAL NOISE FROM A/C EVAPORATOR

Condition	Possible Cause	Correction
Whistling sound is heard from A/C evaporator.	Depending on the combination of the interior/exterior temperatures, engine rpm and refrigerant pressure, the refrigerant flowing out of the expansion valve may, under certain conditions, make a whistling sound	At times, slightly decreasing refrigerant volume may stop this noise.
		Inspect expansion valve and replace if faulty.

ABNORMAL NOISE FROM BLOWER FAN MOTOR

Condition	Possible Cause	Correction
Blower fan motor emits a chirping sound in proportion to its speed of rotation.	Worn or damaged motor brushes or commutator	Repair or replace blower fan motor.
Fluttering noise or large droning noise is heard from blower fan motor.	Leaves or other debris introduced from fresh air inlet to blower fan motor	Remove debris and make sure that the screen at fresh air inlet is intact.

QUICKLY CHECKING OF REFRIGERANT CHARGE

The following procedure can be used for quickly checking whether the A/C system has a proper charge of refrigerant or not. Run engine at fast idle, and operate A/C at its maximum cooling capacity for a few minutes.

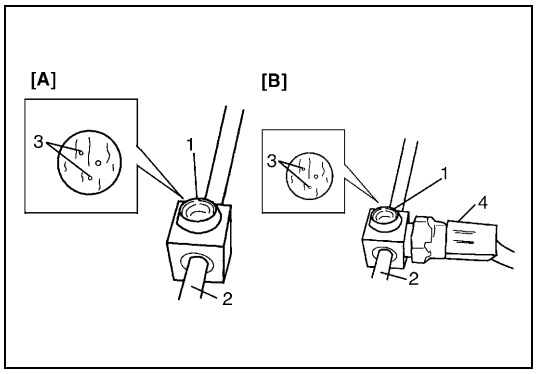

Then, look at the sight glass (1) on condenser outlet pipe (2) and compare what is observed with the symptoms listed in below.

[A] : LH model	3. Bubbles
[B] : RH model	4. A/C refrigerant pressure switch

CHECKING REFRIGERANT CHARGE

Item No.	Symptom	Charge of refrigerant condition	Correction
1	Bubbles observed in sight glass	Insufficient charge of refrigerant in system	Check system for leaks with a leak tester.
2	No bubbles observed in sight glass	No or insufficient charge of refrigerant in system	Refer to the items 3 and 4.
3	No temperature difference between compressor inlet and outlet	Empty or nearly empty system	Evacuate and charge system and then check it for leaks with a leak tester.
4	Noticeable temperature difference between compressor inlet and outlet	Proper or too much charge of refrigerant in system	Refer to the items 5 and 6.
5	When A/C is turned OFF, refrigerant in sight glass clears immediately and remains clear	Too much charge of refrigerant in system	Recharge with specified amount of refrigerant.
6	When A/C is turned OFF, refrigerant in sight glass once produces bubbles and then clears	Proper charge of refrigerant in system	No correction needed because charge of refrigerant is normal.

NOTE:

For specified amount of refrigerant, refer to "OPERATION PROCEDURE FOR A/C WITH REFRIGERANT" in this section.

PERFORMANCE DIAGNOSIS

1) Confirm that vehicle and environmental conditions are as follows.
   - Vehicle is not exposed to direct sun.
   - Ambient temperature is within 15 – 35°C (59 – 95°F).

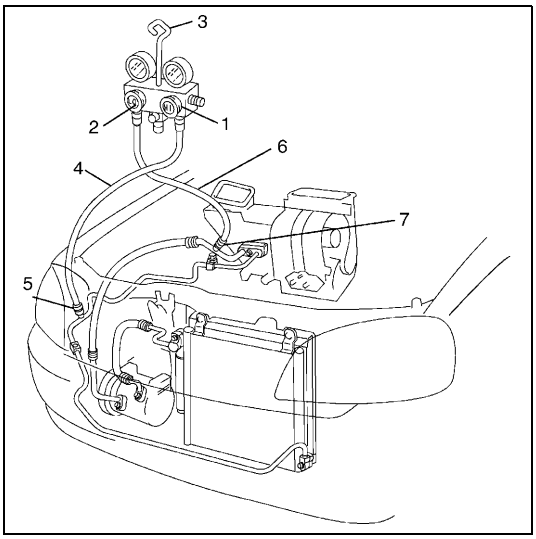

2) Make sure that high pressure valve (1) and low pressure valve (2) of manifold gauge set (3) are firmly closed.
3) Connect high pressure charging hose (4) to high pressure service valve (5), and connect low pressure charging hose (6) to low pressure service valve (7).
4) Bleed the air in charging hoses (4), (6) by loosening their respective nuts on manifold gauge set (3), utilizing the refrigerant pressure. When a hissing sound is heard, immediately tighten nut.

CAUTION:

Do not interchange high and low pressure charging hoses by mistake.

5) Warm up engine to normal operating temperature (engine coolant temperature at 80 – 90°C (176 – 194°F)) and keep it at specified idle speed. (Radiator cooling fan should not be working when checking pressure and temperature.)
6) Turn A/C switch to ON position, and set blower fan switch at "H" (4th position), temperature dial at "COOL", air outlet control dial at "FACE" and fresh/recirculation control dial at "RECIRCULATION". (Confirm that A/C compressor and radiator/condenser cooling fan are working.)
   Keep all windows, doors and engine food open.

Performance diagnosis condition

Ambient temperature	15 – 35°C (59 – 95°F)
Engine rpm	Keep to 1,500 rpm.
Blower fan switch	"H" (4th position)
Temperature control	"Cool"
Air outlet control	"Face"
Vehicle Doors	All open
Air inlet door position	Recirculation

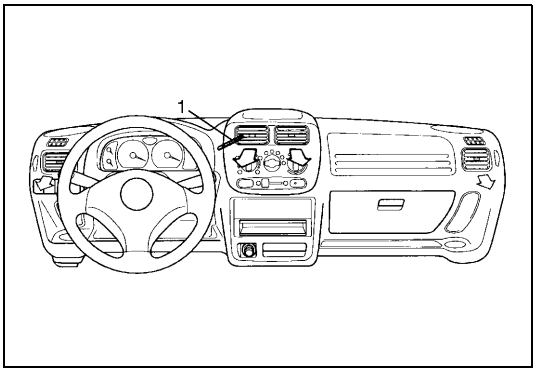

7) With dry bulb thermometer (1) inserted into center duct air outlet and another one set near evaporator air inlet, read temperature indicated on each thermometer.

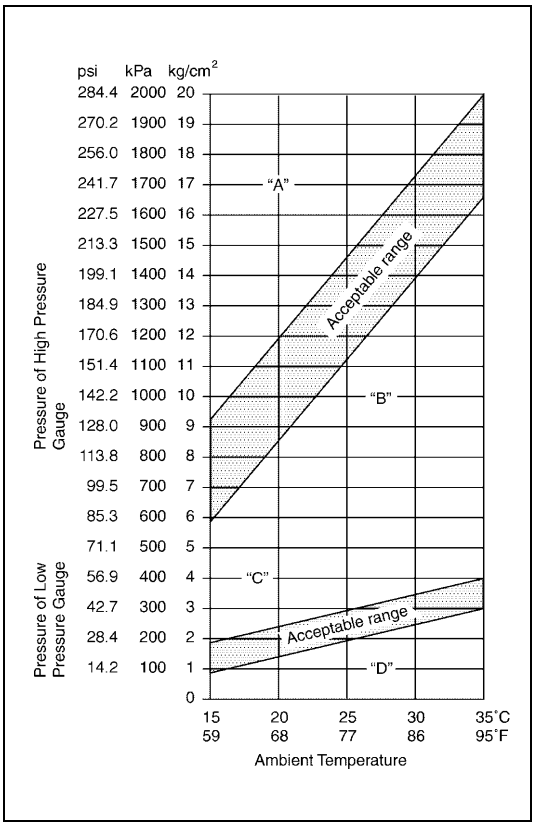

8) Check for each pressure of low side and high side if it is within shaded range of graph.
   If each gauge reading is out of specified pressure, correct defective part referring to "PERFORMANCE DIAGNOSIS TABLE".

NOTE:

Pressure registered on gauge varies with ambient temperature. Therefore, use the graphs when determining if pressures are normal or not.

Low side and high side pressure example :

Gauges should read as follows when ambient temperature is 30°C (86°F).	
Pressure on high pressure gauge	**1400 – 1750 kPa** **14.0 – 17.5 kg/cm^2** **199.1 – 248.9 psi**
Pressure on low pressure gauge	**230 – 350 kPa** **2.3 – 3.5 kg/cm^2** **32.7 – 49.8 psi**

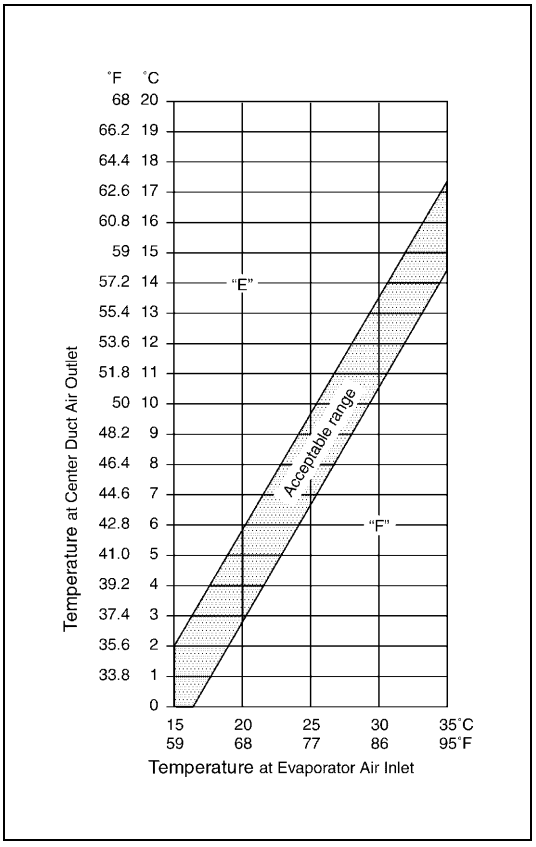

9) Check inlet port temperature-to-outlet port temperature relationship using graph.
   For example, if evaporator inlet port temperature is 25°C (75°F) and center duct air outlet temperature is 8°C (46°F), their crossing point is within acceptable range as shown in graph.
   If crossing point is out of acceptable range, diagnose trouble referring to "PERFORMANCE DIAGNOSIS TABLE".

PERFORMANCE DIAGNOSIS TABLE

NOTE:

If ambient temperature is approximately 30°C (86°F), it is possible to diagnose A/C system in detail referring to "DETAIL DIAGNOSIS TABLE (AMBIENT TEMPERATURE AT 30 °C (86°F))" under "PERFORMANCE DIAGNOSIS" in this section.

HIGH PRESSURE GAUGE

Condition	Possible Cause	Correction
Pressure high ("A" area of high side graph)	Refrigerant overcharged	Recharge.
	Expansion valve frozen or clogged	Check expansion valve.
	Clogged refrigerant passage of high side	Clean or replace.
	Radiator/condenser cooling fan malfunction (Insufficient cooling of condenser)	Check radiator/condenser cooling fan.
	Dirty or bent condenser fins (Insufficient cooling of condenser)	Clean or repair.
	Compressor malfunction (Insufficient oil etc.)	Check compressor.
	Engine overheat	Check engine cooling system referring to Section 6B.
Pressure low ("B" area of high side graph)	Insufficient refrigerant (Insufficient charge or leakage)	Check for leakage, repair if necessary and recharge.
	Expansion valve malfunction (valve opens too wide)	Check expansion valve.
	Compressor malfunction (Insufficient compression)	Check compressor.

LOW PRESSURE GAUGE

Condition	Possible Cause	Correction
Pressure high ("C" area of low side graph)	Expansion valve malfunction (valve opens too wide)	Check expansion valve.
	Compressor malfunction (Insufficient compression)	Check compressor.
Pressure low ("D" area of low side graph)	Insufficient refrigerant (Insufficient charge or leakage)	Check for leakage, repair if necessary and recharge.
	Expansion valve malfunction (valve opens too narrow)	Check expansion valve.
	Clogged refrigerant passage (crashed pipe)	Repair or replace.

THERMOMETER AT CENTER DUCT

Condition	Possible Cause	Correction
Outlet air temperature at center duct is high (Crossing point is in area "E")	Insufficient or excessive charge of refrigerant	Check refrigerant pressure.
	Dirty or bent A/C evaporator fins	Clean or repair.
	Air leakage from cooling (heater) unit or air duct	Repair or replace.
	Malfunctioning, switch over function of door in cooling (heater) unit	Repair or replace.
	Compressor malfunction	Check compressor.
Outlet air temperature at center duct is low (Crossing point is in area "F")	Insufficient air volume from center duct (Heater blower malfunction)	Check blower motor and fan.
	Compressor malfunction	Check compressor.

DETAIL DIAGNOSIS TABLE (AMBIENT TEMPERATURE AT 30°C (86°F))

Condition			Possible Cause	Correction
MANIFOLD GAUGE	MPa (kg/cm^2) (psi)	Detail		
Lo	Hi			
0.23 – 0.35 (2.3 – 3.5) (33 – 50)	**1.4 – 1.75 (14 – 17.5) (200 – 249)**	**Normal condition**	–	–
Negative pressure	**0.5 – 0.6 (5 – 6) (71.2 – 85.3)**	**The low pressure side reads a negative pressure, and the high pressure side reads an extremely low pressure. Presence of frost around tubing to and from receiver/ dryer and expansion valve.**	Dust particles or water droplets are either stuck or frozen inside expansion valve, preventing the refrigerant from flowing	Clean expansion valve. Replace it if it cannot be cleaned. Replace receiver/dryer. Evacuate the A/C system and recharge with fresh refrigerant.
Normal : 0.23 – 0.35 (2.3 – 3.5) (33 – 50) ↑↓ Abnormal : Negative pressure	**Normal : 1.4 – 1.75 (14 – 17.5) (200 – 249) ↑↓ Abnormal : 0.7 – 1.0 (7 – 10) (100 – 142)**	**During A/C operation, the low pressure side sometimes indicates negative pressure, and sometimes normal pressure. Also high pressure side reading fluctuates between the abnormal and normal pressure.**	Expansion valve is frozen due to moisture in the system, and temporarily shuts off the refrigeration cycle	Replace expansion valve. Replace receiver/dryer. Evacuate A/C system and recharge with fresh refrigerant.
0.05 – 0.15 (0.5 – 1.5) (4.2 – 21.3)	**0.7 – 1.0 (7 – 10) (100 – 142)**	**Both low and high pressure sides indicate low readings. Continuous air bubbles are visible through sight glass. Output air is slightly cold.**	Insufficient refrigerant in system (Refrigerant leaking)	Using leak detector, check for leaks and repair as necessary. Recharge refrigerant to a specified amount. If the pressure reading is almost 0 when the manifold gauges are attached, check for any leaks, repair them, and evacuate the system.
0.4 – 0.6 (4 – 6) (56.9 – 85.3)		**Pressure on low pressure side is high. Pressure on high pressure side is low. Both pressure becoming equal right after A/C is turned OFF.**	Internal leak in compressor	Inspect compressor and repair or replace as necessary.

Condition			Possible Cause	Correction
MANIFOLD GAUGE	MPa (kg/cm^2) (psi)	Detail		
Lo	Hi			
0.35 – 0.45 (3.5 – 4.5) (50 – 64)	**2.0 – 2.5 (20 – 25) (285 – 355)**	**High pressure reading on both low and high pressure sides. Air bubbles are not visible even when engine rpm is lowered.**	Overcharged A/C system Faulty condenser cooling operation Faulty radiator/condenser cooling fan operation	Adjust refrigerant to specified amount. Clean condenser. Inspect and repair radiator/ condenser cooling fan.
		High pressure reading on both low and high pressure sides. Low pressure side tubing is not cold when touched. Air bubbles are visible through sight glass.	Presence of air in A/C system (Improperly evacuated)	Replace receiver/dryer. Inspect quantity of compressor oil and presence of contaminants in oil. Evacuate system and recharge with fresh refrigerant.
0.45 – 0.55 (4.5 – 5.5) (64 – 78)		**High pressure reading on both low and high pressure sides. Large amount of frost or dew on the low pressure side tubing.**	Faulty expansion valve Refrigerant flow is not regulated properly	Replace expansion valve.

COMPRESSOR DRIVE BELT

INSPECTION

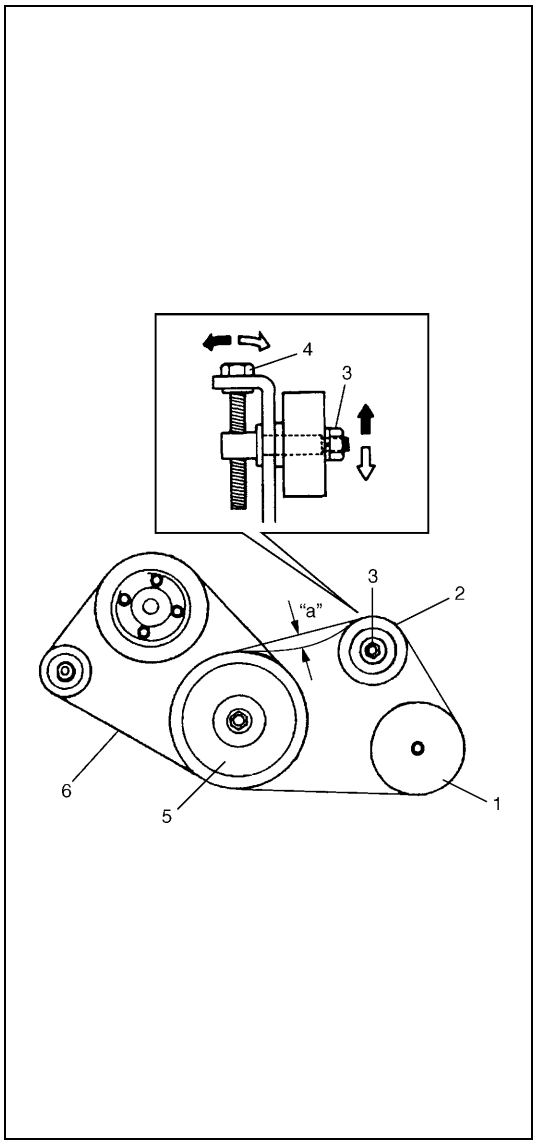

- Check compressor drive belt (6) for wear and cracks, and replace as required.
- Check compressor drive belt (6) tension by measuring how much it deflects when pushed at intermediate point between compressor pulley (1) and tension pulley (2) with about 100 N (10 kg) force after crankshaft pulley 1 rotating.
  If belt tension is without specification, adjust belt tension referring to below procedures.

Compressor drive belt tension
"a" : 3 – 5 mm (0.12 – 0.20 in.)
New compressor drive belt tension
"a" : 2 – 4 mm (0.08 – 0.16 in.)

ADJUSTMENT

1) Loosen tension pulley nut (3).
2) Adjust belt tension by tighten or loosen tension pulley adjusting bolt (4).
3) Tighten tension pulley nut (3).
4) Turn the crank pulley (5) 1 revolution, then check belt tension.

REPLACEMENT

1) Loosen tension pulley nut (3).
2) Loosen belt tension by loosen tension pulley adjusting bolt (4).
3) Remove compressor drive belt (6).
4) Install new compressor drive belt.
5) Adjust belt tension referring to above procedure.

ELECTRICAL DIAGNOSIS

WIRING DIAGRAM

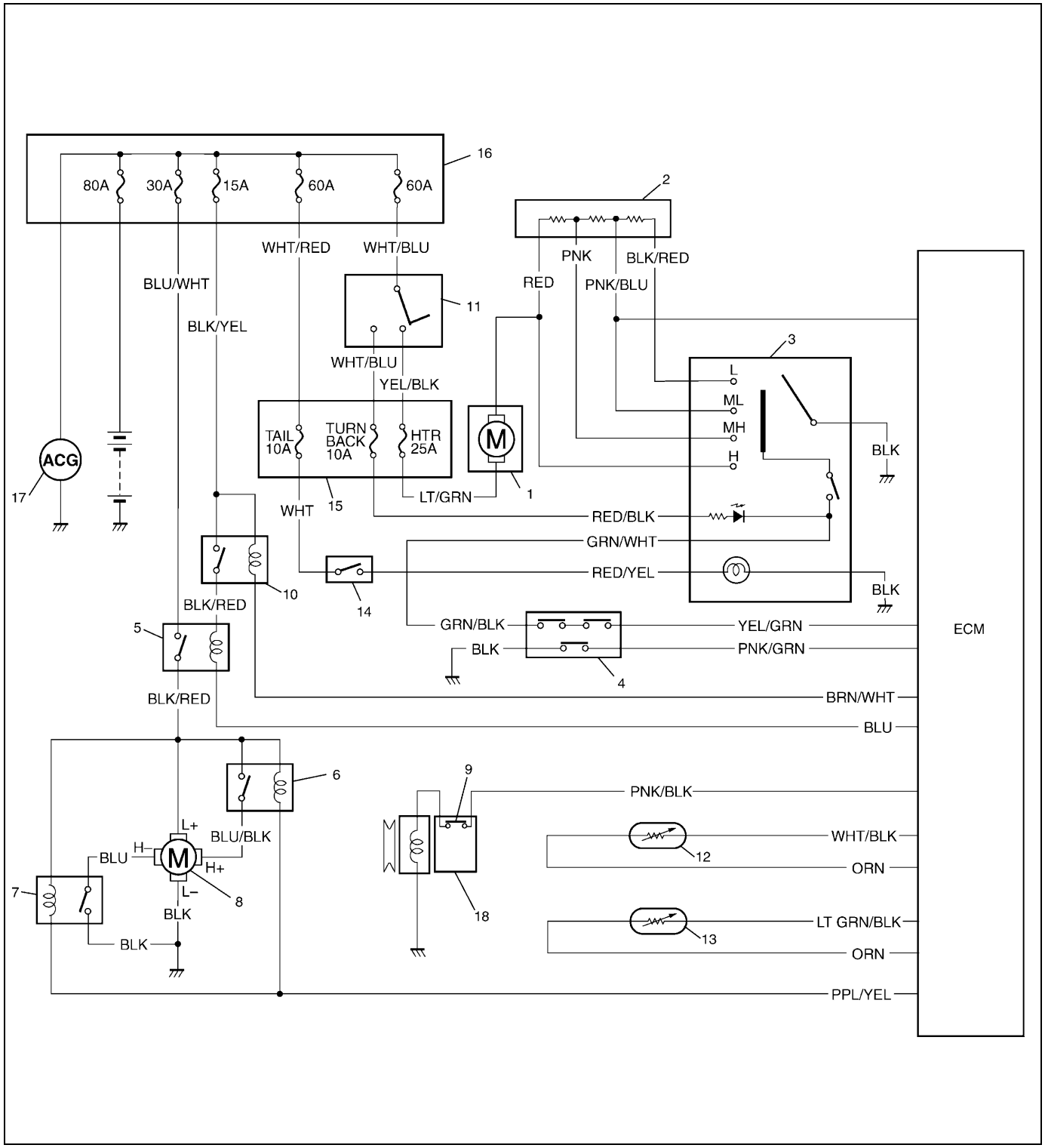

1. Blower fan motor	6. Radiator/condenser cooling fan relay No.2	11. Ignition switch	16. Main fuse box
2. Blower fan motor resistor	7. Radiator/condenser cooling fan relay No.3	12. A/C evaporator temperature sensor	17. Generator
3. Blower fan switch and A/C switch	8. Radiator/condenser cooling fan motor	13. ECT sensor	18. Compressor
4. A/C refrigerant pressure switch	9. Compressor thermal switch	14. Lighting switch	
5. Radiator/condenser cooling fan relay No.1	10. Main relay	15. Circuit fuse box	

A/C SYSTEM INSPECTION OF ECM AND ITS CIRCUITS

ECM and its circuits can be checked at ECM wiring couplers by measuring voltage.

CAUTION:

ECM cannot be checked by itself. It is strictly prohibited to connect voltmeter or ohmmeter to ECM with couplers disconnected from it.

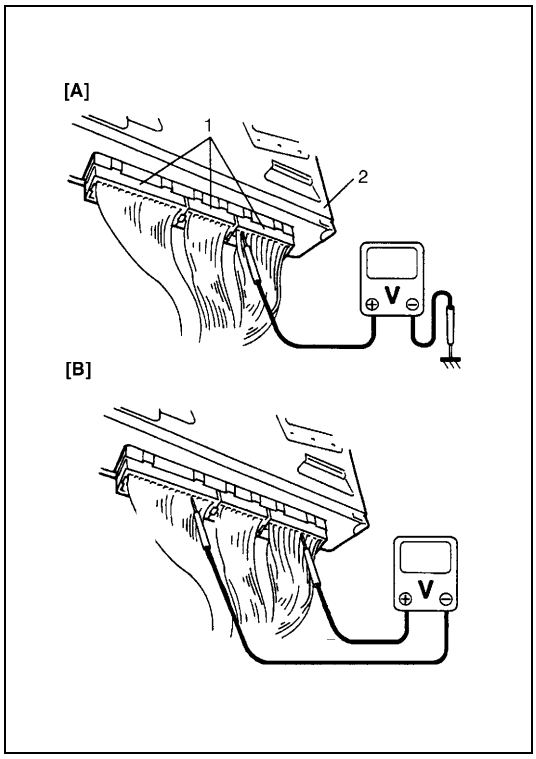

VOLTAGE CHECK

1) Remove ECM from vehicle by referring to “ECM (PCM) REMOVAL AND INSTALLATION” in Section 6E1.
2) Connect ECM couplers (1) to ECM (2).
3) Check voltage at each terminal of couplers connected.

NOTE:

As each terminal voltage is affected by the battery voltage, confirm that it is 11 V or more when ignition switch is ON position.

[A] :	Fig. A
[B] :	Fig. B

System Circuit

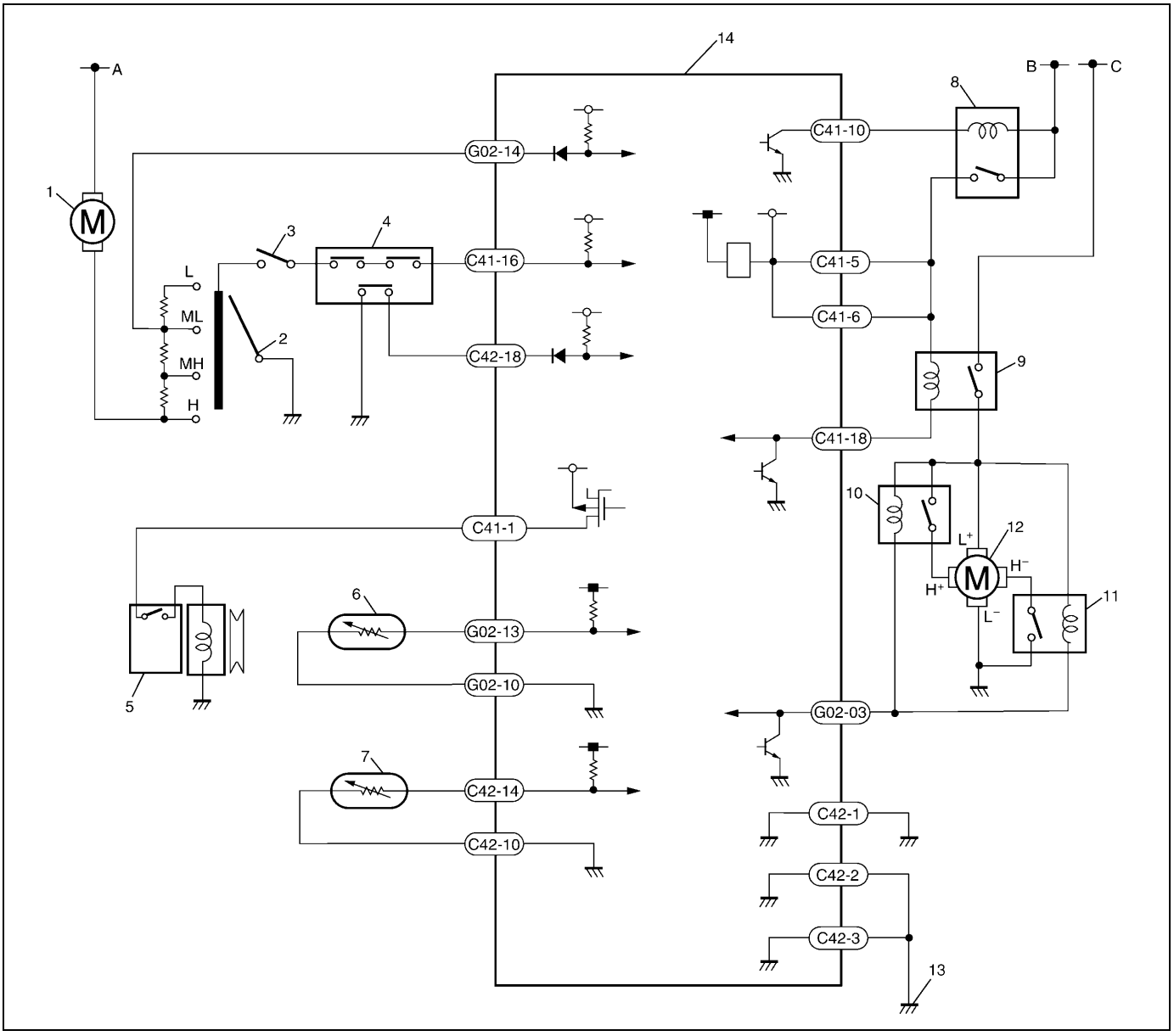

1. Blower fan motor	8. Main relay	A. To “HTR” fuse (25 A) in circuit fuse box
2. Blower fan switch	9. Radiator/condenser cooling fan motor relay No.1	B. To main fuse (15 A)
3. A/C switch	10. Radiator/condenser cooling fan motor relay No.2	C. To main fuse (30 A)
4. A/C refrigerant pressure switch	11. Radiator/condenser cooling fan motor relay No.3	
5. Compressor	12. Radiator/condenser cooling fan motor	
6. A/C evaporator temperature sensor	13. Engine earth	
7. ECT sensor	14. ECM	

Terminal arrangement of ECM coupler (Viewed from harness side)

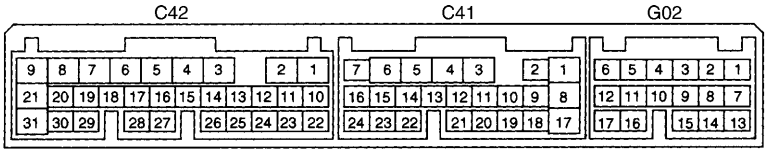

ECM Voltage Values Table for Relation of A/C Control

Terminal	Wire	Circuit	Measurement ground	Normal value	Condition
C41-1	PNK/BLK	Compressor magnet clutch output	Ground to engine (Fig B)	12 – 15 V	Except the above-mentioned condition with engine running
				0 – 1 V	Blower fan switch and A/C switch ON with engine running
C41-5	BLK/RED	Main power supply for ECM	Ground to engine (Fig B)	10 – 14 V	Ignition switch ON with engine stopped
C41-6	BLK/RED	Main power supply for ECM	Ground to engine (Fig B)	10 – 14 V	Ignition switch ON with engine stopped
C41-10	BRN/ WHT	Main relay drive	Ground to engine (Fig B)	0.5 – 1.2 V	Ignition switch ON with engine stopped
				10 – 14 V	Ignition switch OFF
C41-16	YEL/GRN	A/C switch input	Ground to engine (Fig B)	12 – 15 V	Blower fan switch or A/C switch OFF with engine running
				0 – 1 V	Blower fan switch and A/C switch ON with engine running
C41-18	BLU	Radiator/condenser cooling fan relay output 1	Ground to engine (Fig B)	0 – 1 V	Blower fan switch and A/C switch ON
					Engine coolant temperature at more than 97.5°C (207.5°F) with engine running
				12 – 15 V	Blower fan motor switch or A/C switch OFF
					Engine coolant temperature at less than 97.5°C (207.5°F) with engine running
C42-1	BLK/ORN	Main ground for ECM	Ground to body (Fig A)	–0.5 – 1 V	Engine running
C42-2	BLK	ECM ground for power circuit	Ground to body (Fig A)	–0.5 – 1 V	Engine running
C42-3	BLK/ORN	ECM ground for power circuit	Ground to body (Fig A)	–0.5 – 1 V	Engine running
C42-10	ORN	Sensor ground for ECT sensor	Ground to body (Fig A)	–0.5 – 1 V	Engine running
C42-14	LT GRN/ BLK	ECT sensor input	Ground to engine (Fig B)	0.71 – 0.75 V (298 – 320 Ω)	Engine coolant temperature at approximately 80°C (176°F) with engine running
				0.35 – 0.37 V (135 – 144 Ω)	Engine coolant temperature at Approximately 110°C (230°F) with engine running If the temperature is more than 114°C (232°F), compressor and condenser cooling fan should be stop (come back at less than 112°C (230°F))
C42-18	PNK/GRN	Medium pressure switch input	Ground to engine (Fig B)	–0.5 – 1 V	Medium pressure switch of A/C refrigerant pressure switch ON
				12 – 15 V	Medium pressure switch of A/C refrigerant pressure switch OFF
G02-3	PPL/YEL	Radiator/Condenser cooling fan relay output 2	Ground to engine (Fig B)	0 – 1 V	Blower fan motor switch ON, A/C switch ON and medium pressure switch OFF
					Engine coolant temperature at more than 102.5°C (216.5°F) with engine running
				12 – 15 V	Blower fan motor switch OFF, A/C switch OFF or medium pressure switch ON
					Engine coolant temperature at less than 102.5°C (216.5°F) with engine running
G02-10	ORN	Sensor ground for A/C evaporator temperature sensor	Ground to engine (Fig A)	–0.5 – 1 V	Engine running
G02-13	PNK/BLU	Blower fan speed input	Ground to engine (Fig B)	0 – 1 V	Blower fan motor switch “ML”, “MH”, or “H” with engine running
				4 – 7 V	Blower fan motor switch “L” position with engine running
				12 – 15 V	Blower fan motor switch OFF with engine running
G02-14	WHT/BLK	A/C evaporator temperature sensor input	Ground to engine (Fig B)	2.09 – 2.17 V (1940 – 2060 Ω)	A/C evaporator temperature at approximately 25°C (77°F) with engine running
				3.52 – 3.59 V (6450 – 6850 Ω)	A/C evaporator temperature at approximately 0°C (32°F) with engine running If the temperature is less than approximately 2.5°C (36.5°F), compressor and condenser cooling fan should be stop (come back at more than approximately 4°C (39.2°F)

REFRIGERANT RECOVERY, EVACUATING AND CHARGING

WARNING:

- **Your eyes should not be exposed to refrigerant (liquid).**
  Any liquid HFC-134a (R-134a) escaping by accident shows a temperature as low as approximately –6°C (32°F) below freezing point. Should liquid HFC-134a (R-134a) get into your eyes, it may cause a serious injury. To protect your eyes against such accident, it is necessary to always wear goggles. Should it occur that HFC-134a (R-134a) strikes your eyes, consult a doctor immediately.
  - **Do not use your hand to rub the affected eye(s). Instead, use quantities of fresh cold water to splash it over the affected area to gradually raise temperature of such area above freezing point.**
  - **Obtain proper treatment as soon as possible from a doctor or eye specialist.**
- **Should the HFC-134a (R-134a) liquid come into contact with your skin, the affected area should be treated in the same manner as when skin is frostbitten or frozen.**
- **Refrigerant must not be handled near where welding or steam cleaning is performed.**
- **Refrigerant should be kept at a cold and dark place. It should never be stored where a high temperature is anticipated, e.g. where exposed to direct sun light, close to fire or inside vehicle (including trunk room).**
- **Avoid breathing fumes produced when HFC-134a (R-134a) is burned. Such fumes may be hazardous to health.**

OPERATION PROCEDURE FOR REFRIGERANT CHARGING

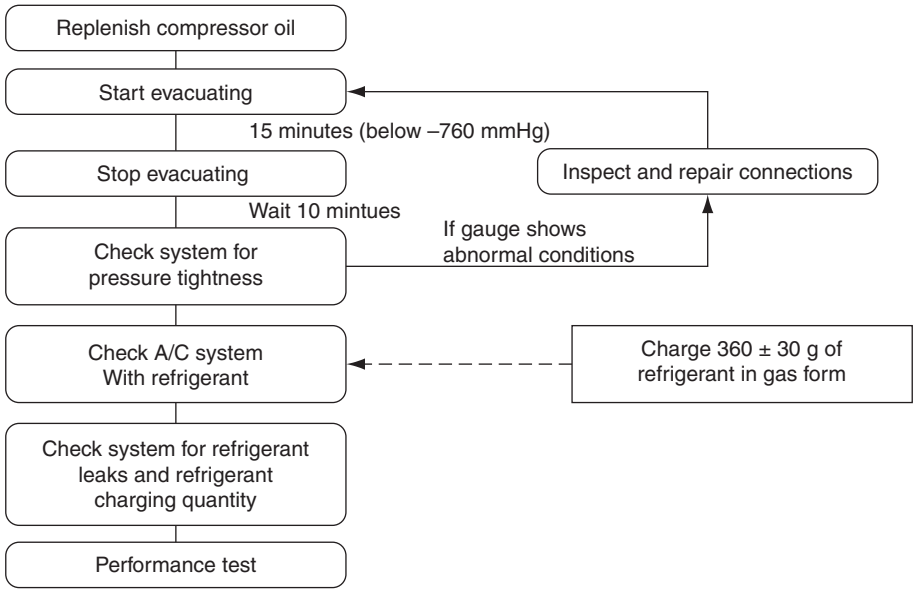
Replenish compressor oil
Start evacuating
15 minutes (below –760 mmHg)
Stop evacuating
Inspect and repair connections
Wait 10 mintues
If gauge shows abnormal conditions
Check system for pressure tightness
Check A/C system With refrigerant
Charge 360 ± 30 g of refrigerant in gas form
Check system for refrigerant leaks and refrigerant charging quantity
Performance test

RECOVERY

REFRIGERANT RECOVERY

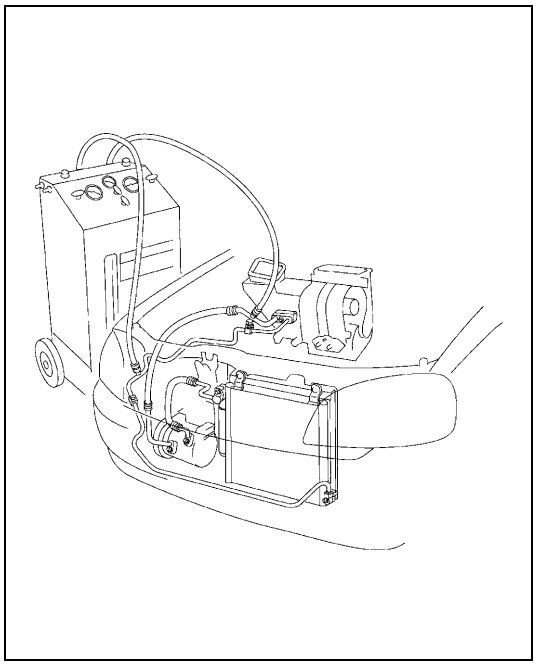

When discharging refrigerant out of A/C system, always recover it by using refrigerant recovery and recycling equipment. Discharging refrigerant HFC-134a (R-134a) into atmosphere would cause adverse effect to environments.

NOTE:

- **After recovery refrigerant from system, the amount of removed compressor oil must be measured for replenishing compressor oil.**
- **When handling recovery and recycling equipment, be sure to follow the instruction manual for the equipment.**

REPLENISHING COMPRESSOR OIL

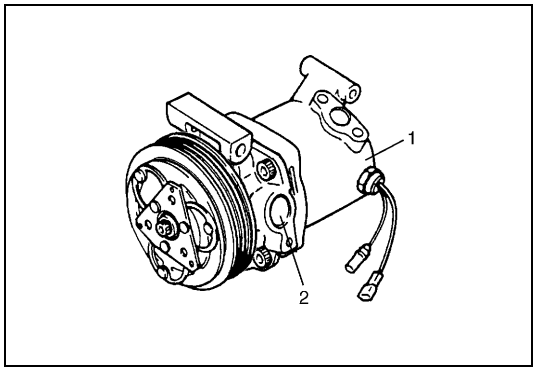

It is necessary to replenishing specified amount of compressor oil to compressor (1) from compressor suction side hole (2) before evacuating and charging refrigerant.

WHEN CHARGING REFRIGERANT ONLY

When charging refrigerant without replacing any component part, replenish the same amount of measured oil when recover refrigerant (if not measure, replenish 30 cc oil).

WHEN REPLACING COMPRESSOR

CAUTION:
Be sure to use HFC-134a (R-134a) compressor oil.

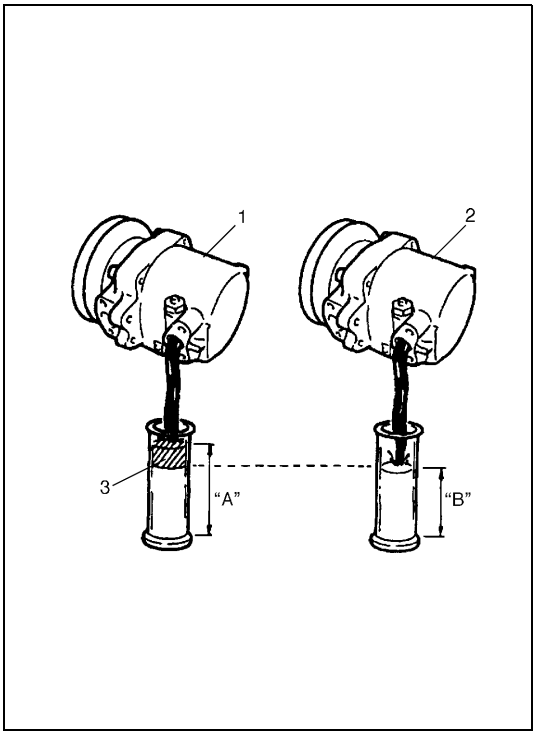

Compressor oil is sealed in each new compressor by the amount required for A/C system. Therefore, when using a new compressor for replacement, drain oil from it by the amount calculated as follows.

"C" = "A" – "B"
"C" : Amount of oil to be drained
"A" : Amount of oil sealed in a new compressor
"B" : Amount of oil remaining in removed compressor

NOTE:
Compressor assembly supplied from factory is filled up with the following amount of oil.

Oil amount in compressor
: 120 cm^3 (120 cc, 7.32 cu-in)

1. New compressor
2. Removed compressor
3. Excess oil ("A" – "B")

WHEN REPLACING OTHER PART

Replenish the following amount of oil to compressor.

Amount of compressor oil to be replenished

Replaced part	Amount of compressor oil
Evaporator	25 cm^3 (25 cc, 1.53 cu-in)
Condenser	15 cm^3 (15 cc, 0.92 cu-in)
Dryer	20 cm^3 (20 cc, 1.22 cu-in)
Hoses	10 cm^3 (10 cc, 0.61 cu-in) each
Pipes	10 cm^3 (10 cc, 0.61 cu-in) each

EVACUATING

EVACUATING PROCEDURE

CAUTION:
Do not evacuate before recovering refrigerant in system.

NOTE:
Whenever opened (exposed to atmospheric air), air conditioning system must be evacuated by using a vacuum pump. The A/C system should be attached with a manifold gauge set, and should be evacuated for approximately 15 minutes.

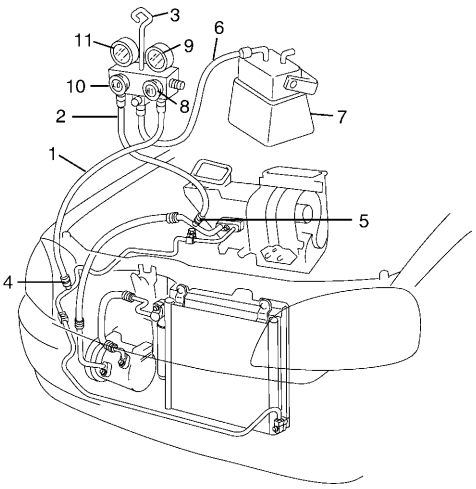

1) Connect high charging hose (1) and low charging hose (2) of manifold gauge set (3) respectively as follows :
   High charging hose (1) → High pressure charging valve (4) on condenser outlet pipe
   Low charging hose (2) → Low pressure charging valve (5) on suction pipe
2) Attach center charging hose (6) of manifold gauge set (3) to vacuum pump (7).
3) Operate vacuum pump (7), and then open discharge side valve (Hi) (8) of manifold gauge set (3).
   If there is no blockage in the system, there will be an indication on high pressure gauge (9).
   In this case, open the other side valve (Lo) (10) of the set and repair the system.
4) Approximately 10 minutes later, low pressure gauge (11) should show a vacuum lower than –760 mmHg providing no leakage exists.

NOTE:

- **If the system does not show a vacuum below –760 mmHg, close both valves, stop vacuum pump and watch movement of low pressure gauge.**
- **Increase in the gauge reading suggests existence of leakage. In this case, repair the system before continuing its evacuation.**
- **If the gauge shows a stable reading (suggesting no leakage), continue evacuation.**

5) Evacuation should be carried out for a total of at least 15 minutes.
6) Continue evacuation until low pressure gauge (9) indicates a vacuum less than –760 mmHg, and then close both valves (8), (10).
7) Stop vacuum pump (7). Disconnect center charging hose (6) from pump inlet. Now, the system is ready for charging refrigerant.

CHECKING SYSTEM FOR PRESSURE LEAKS

After completing the evacuation, close manifold gauge high pressure valve and low pressure valve and wait 10 minutes. Verify that low pressure gauge reading has not changed.

CAUTION:

If the gauge reading moves closer to "0", there is a leak somewhere. Inspect the tubing connections, make necessary corrections, and evacuate system once again, making sure that there are no leaks.

CHARGING

CAUTION:

- **Always charge through low pressure side of A/C system at after the initial charging is performed from the high pressure side with the engine stopped.**
- **Never charge to high pressure side of A/C system with engine running.**
- **Do not charge while compressor is hot.**
- **When installing tap valve to refrigerant container to make a hole there through, carefully follow directions given by manufacturer.**
- **A pressure gauge should always be used before and during charging.**
- **The refrigerant container should be emptied of refrigerant when discarding it.**
- **The refrigerant container should not be heated up to 40°C (104°F) or over.**
- **Refrigerant container should not be reversed in direction during charging. Reversing in direction causes liquid refrigerant to enter compressor, causing troubles, such as compression of liquid refrigerant and the like.**

NOTE:

The air conditioning system contains HFC-134a (R-134a).
Described here is a method to charge the air conditioning system with refrigerant from the refrigerant service container.
When charging refrigerant recovered by using the refrigerant and recycling equipment (when recycling refrigerant), follow the procedure described in the equipment manufacturer's instruction manual.

CHARGING PROCEDURE

The initial charging of the A/C system is performed from the high pressure side with the engine stopped.
And next, this method must be followed by charging from the low pressure side with the engine running.

1) Check to make sure that hoses are routed properly after evacuating the system.

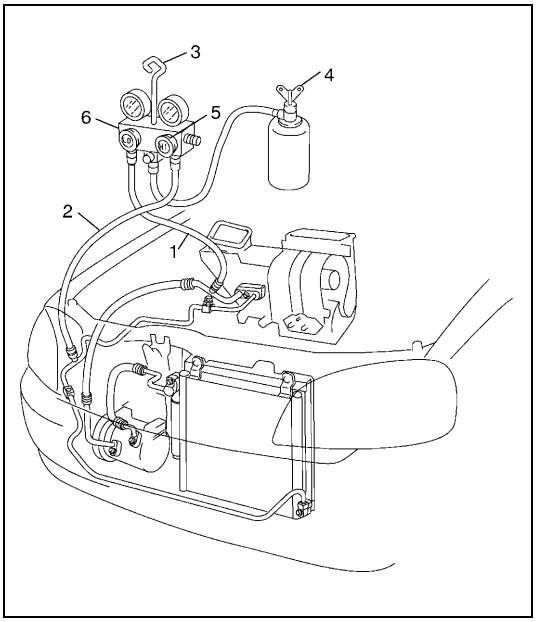

2) Connect Low charging hose (1) and High charging hose (2) of the manifold gauge set (3) in position. Thus open refrigerant container valve (4) to purge the charging line.
3) Open the high pressure side valve (5) and charge refrigerant to system.
4) After a while, open the low pressure side valve (6) and close the high pressure side valve (5).

WARNING:

Make sure that high pressure side valve is closed securely.

5) Start engine and keep engine speed at 1500 r/min. Then, operate air conditioning.
6) Charge A/C system with refrigerant in vapor state. At this time, refrigerant container (4) should be held upright.

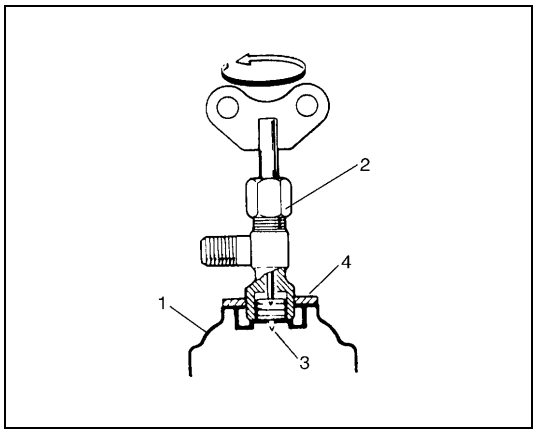

7) When refrigerant container (1) is emptied, use the following procedure to replace it with a new refrigerant container (1).
   a) Close low pressure valve.
   b) Replace empty container (1) with a refrigerant container which has been charged with refrigerant. When using refrigerant container tap valve (2), use the following procedure for replacement.
      i) Retract needle (3) and remove refrigerant container tap valve (2) by loosening its plate nut (4).
      ii) Install previously-removed refrigerant container tap valve (2) to a new refrigerant container (1).

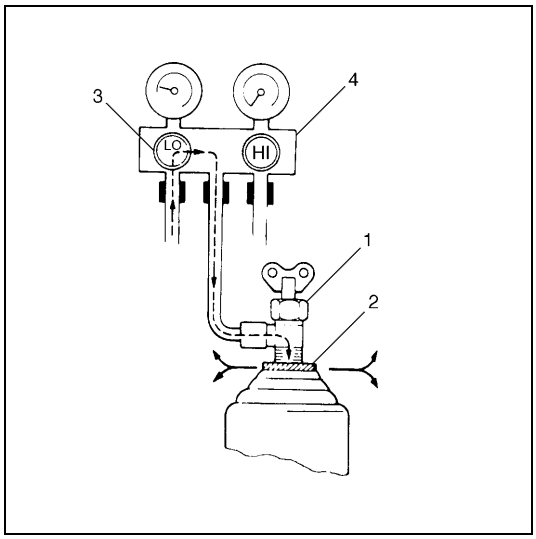

   c) Purge any air existing in center charging hose
      When using refrigerant container tap valve, use the following procedure to purge air.
      i) Once fully tighten refrigerant container tap valve (1), and then loosen (open) plate nut (2) slightly.
      ii) Open low pressure side valve (3) of manifold gauge set (4) a little.
      iii) As soon as refrigerant comes out with a “hiss” through a clearance between refrigerant container and tap valve, tighten plate nut (2) as well as low pressure side valve (3).
      iv) Turn handle of tap valve (1) clockwise so that its needle is screwed into the new container to make a hole for refrigerant flow.

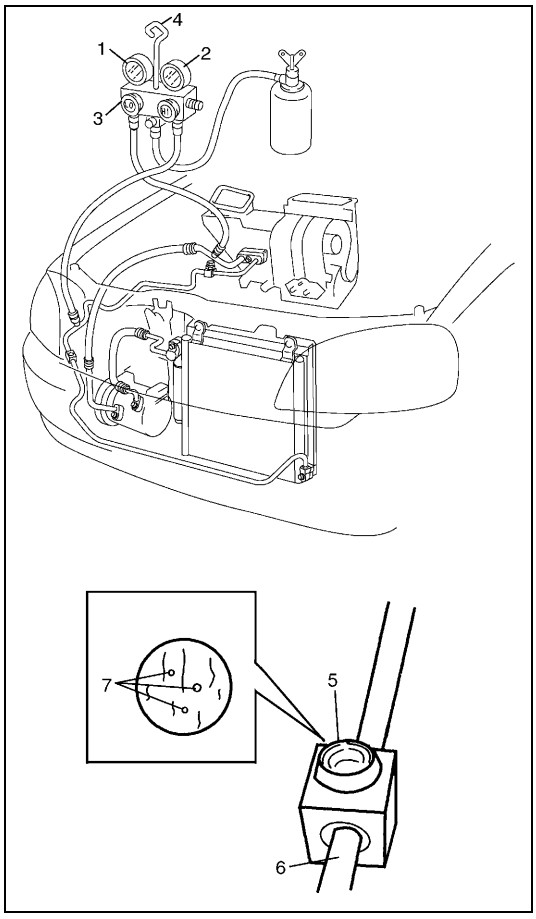

8) After the system has been charged with specified amount (330 – 390 g) of refrigerant or when low pressure gauge (1) and high pressure gauge (2) have indicated the following specified amount, close low pressure side valve (3) on manifold gauge set (4). At this time, look into the sight glass (5) of condenser outlet pipe (6) and check that there are no bubbles (7) in it, which means that the system is fully charged.

Low side and high side pressure example

Gauges should read as follows when ambient temperature is 30°C (86 °F).	
Pressure on high pressure gauge	**1400 – 1750 kPa** **14.0 – 17.5 kg/cm^2** **199.1 – 248.9 psi**
Pressure on low pressure gauge	**230 – 350 kPa** **2.3 – 3.5 kg/cm^2** **32.7 – 49.8 psi**

REMOVING MANIFOLD GAUGE SET

WARNING:
High pressure side is naturally under high pressure. So, care must be used to protect your eyes and skin.

When A/C system has been charged with a specified amount of refrigerant, remove manifold gauge set as follows :

1) Close low pressure side valve of manifold gauge set. (The high pressure side valve is closed continuously during the process of charging.)
2) Close refrigerant container valve.
3) Stop engine.
4) Using shop rag, remove charging hoses from service valves. This operation must be performed rapidly.
5) Put caps on service valves.

LEAK TEST

Whenever a refrigerant leak is suspected in the system or any service operation has been performed which may result in disturbing lines or connections, it is advisable to test for leaks.
Common sense should be used in performing any refrigerant leak test, since the need and extent of any such test will, in general, depend upon the nature of a complaint and the type of a service performed on the system.

LIQUID LEAK DETECTORS

WARNING:
- **To prevent explosions or fires, make sure that there are no flammables in the vicinity.**
- **When exposed to fire, the refrigerant turns into a poisonous gas (phosgene). Do not inhale this gas.**

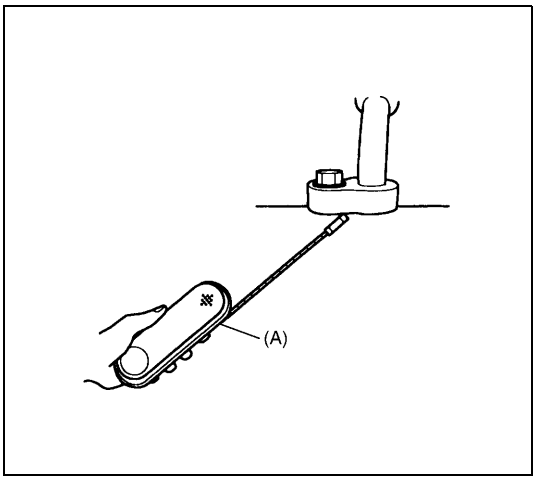

There are a number of fittings and places throughout the air conditioning system where a liquid leak detector solution may be used to pinpoint refrigerant leaks.
By merely applying the solution to the area in question with a swab, such as attached to the cap of a vial, bubbles will form within seconds if there is a leak.
For confined areas, such as sections of the evaporator and condenser, an electronic (refrigerant) leak detector is more practical for determining leaks.

Special tool
(A) : 09990 - 86011

ON-VEHICLE SERVICE

WARNING:

Should refrigerant HFC-134a (R-134a) strike your eye(s), consult a doctor immediately.

- **Do not use your hand to rub affected eye(s). Instead, use quantities of fresh cold water to splash it over affected area to thus gradually raise its temperature above the freezing point.**
- **Obtain proper treatment as soon as possible from a doctor or eye specialist. Should liquid refrigerant HFC-134a (R-134a) get on your skin, such affected part should be treated in the same manner as when skin is frostbitten or frozen.**

SERVICE PRECAUTION

When servicing air conditioning system, note the following instructions.

REFRIGERANT LINE

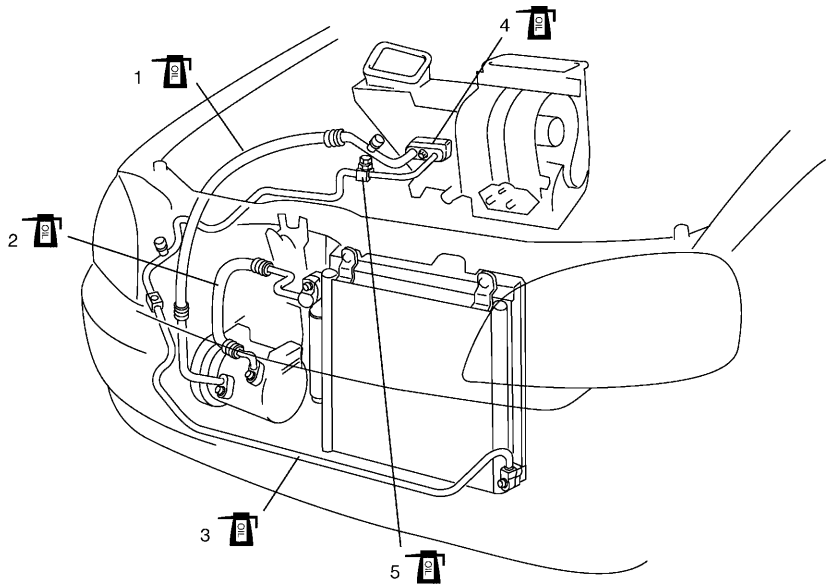

1. Suction hose: Apply compressor oil (refrigerant oil) to O-ring.	4. Expansion valve: Apply compressor oil (refrigerant oil) to O-ring.
2. Discharge hose: Apply compressor oil (refrigerant oil) to O-ring.	5. A/C refrigerant pressure switch: Apply compressor oil (refrigerant oil) to O-ring.
3. Condenser outlet pipe: Apply compressor oil (refrigerant oil) to O-ring.	

- Never use heat for bending pipes. When bending a pipe, try to make its bending radius as slight as possible.
- Keep internal parts of air conditioning free from moisture and dirt. When disconnecting any line from system, install a blind plug or cap to the fitting immediately.
- When connecting hoses and pipes, apply a few drops of compressor oil (refrigerant oil) to seats of coupling nuts and O-ring.
- When tightening or loosening a fitting, use two wrenches, one for turning and the other for support.
- Tighten flared nuts by the following specified torque.

Tightening torque
8 mm pipe : 13 N·m (1.3 kg-m, 9.5 lb-ft)
12 mm pipe : 23 N·m (2.3 kg-m, 16.6 lb-ft)
14.5 mm pipe : 33 N·m (3.3 kg-m, 23.8 lb-ft)

- Route drain hose so that drained water does not make any contact to vehicle components.
- If pipes or hoses are replaced, replenish specified amount of compressor oil to compressor suction side by referring to “REPLENISHING COMPRESSOR OIL” in this section.

HANDLING REFRIGERANT HFC-134a (R-134a)

- Always wear goggles to protect your eyes.
- Avoid you direct contact to liquid refrigerant.
- Do not heat refrigerant container higher than 40°C (104°F).
- Do not discharge refrigerant into atmosphere.
- Do not allow liquid refrigerant to touch bright metals. Refrigerant combined with moisture is corrosive and will tarnish surfaces of bright metals including chrome.

REFRIGERANT RECOVERY

When discharging refrigerant out of A/C system, always recover it by using refrigerant recovery and recycling equipment. Discharging refrigerant HFC-134a (R-134a) into atmosphere would cause adverse effect to environments.

REFRIGERANT CHARGE

After perform replenishing compressor oil and evacuating, charge a proper amount of refrigerant to A/C system referring to “CHARGING” in this section.

CAUTION:
Do not perform an additional refrigerant charging to A/C system. This cause it to overcharge.

CONDENSER ASSEMBLY

CAUTION:
Be careful not to damage condenser fins. If condenser fin is bent, straighten it by using flat head screwdriver or pair of pliers.

INSPECTION

Check the following.

- Clog of condenser fins.
  If, any clogs are found, condenser fins should be washed with water, and should be dried with compressed air.
- Condenser fins for leakage and breakage.
  If any defects are found, repair or replace condenser.
- Condenser fittings for leakage.
  If any defects are found, repair or replace condenser.

REMOVAL

1) Disconnect negative (–) cable at battery.
2) Recover refrigerant from A/C system by referring to "RECOVERY" in this section.

NOTE:

The amount of removed compressor oil must be measured for replenishing compressor oil.

3) Remove front bumper referring to "FRONT BUMPER" in Section 8.

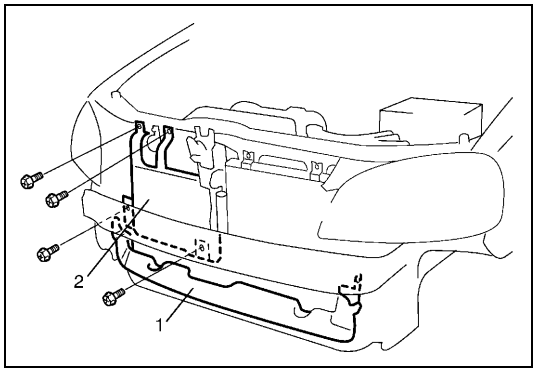

4) Remove front cross member cover (1) and engine food cover (2) from vehicle body.

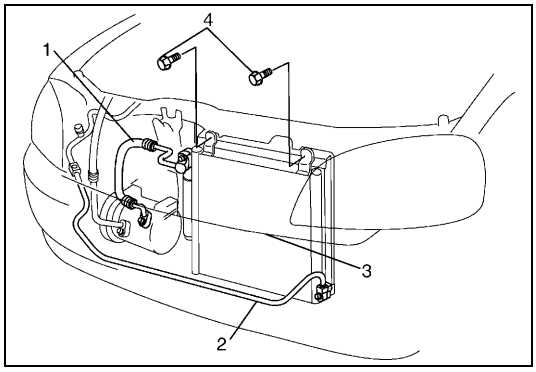

5) Disconnect discharge hose (1) and condenser outlet pipe (2) from condenser (3).
6) Remove condenser mounting bolts (4).
7) Remove condenser (3).

INSTALLATION

Reverse removal procedure to install condenser noting the following instructions.

- Replenish specified amount of compressor oil to compressor suction side by referring to "REPLENISHING COMPRESSOR OIL" in this section.
- Evacuate and charge refrigerant by referring to "EVACUATING" and "CHARGING" in this section.

RECEIVER/DRYER

REMOVAL

1) Remove condenser assembly referring to “CONDENSER ASSEMBLY” in this section.

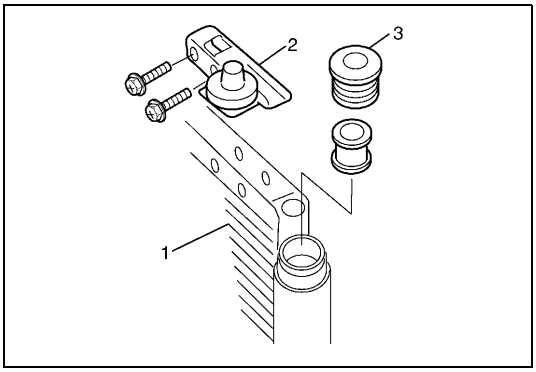

2) Remove condenser mounting bracket (1) from condenser (2) as shown.
3) Remove receiver/dryer cap (3) using a hexagon wrench.

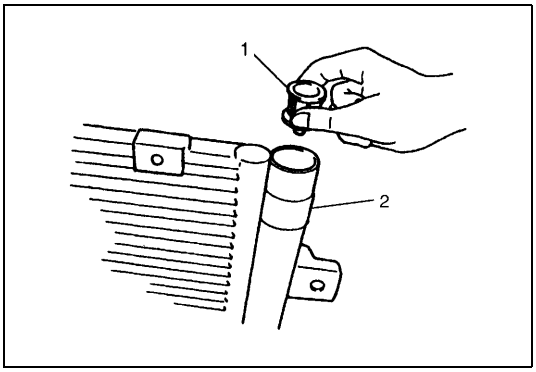

4) Remove filter (1) from the receiver/dryer (2).

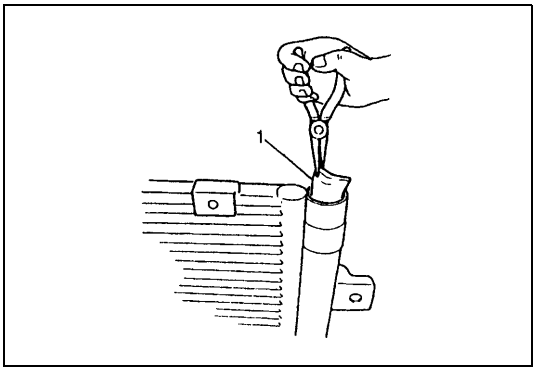

5) Remove dryer (1) using a plier.

INSTALLATION

Reverse removal procedure to install receiver/dryer noting the following instructions.

- Do not remove dryer from the plastic bag until just before inserting it into the receiver.

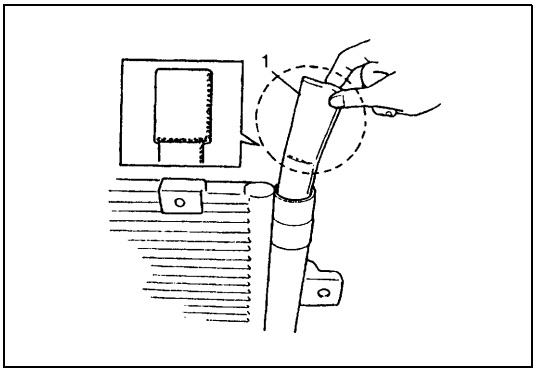

- Install dryer (1) with its double-layer portion facing the bottom of the receiver.

- Tighten receiver/dryer cap to specified torque

Tightening torque
Receiver / dryer cap : 13 N·m (1.3 kg-m, 9.5 lb-ft)

- Replenish specified amount of compressor oil to compressor suction side by referring to “REPLENISHING COMPRESSOR OIL” in this section.

RADIATOR/CONDENSER COOLING FAN MOTOR

REMOVAL AND INSTALLATION

For details, refer to “RADIATOR” in Section 6B.

INSPECTION

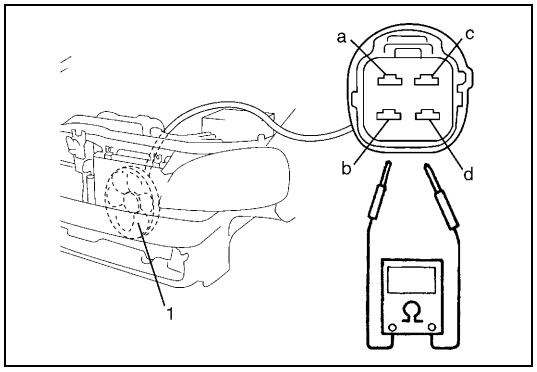

1) Check continuity terminal “a” – “b” and “c” – “d” about the radiator/condenser cooling fan motor (1).
   If check results are no continuity, replace radiator/condenser cooling fan motor.
2) Check no continuity “a” – “c” and “b” – “d” about the radiator/condenser cooling fan motor (1).
   If check result are continuity, replace radiator/condenser cooling fan motor.

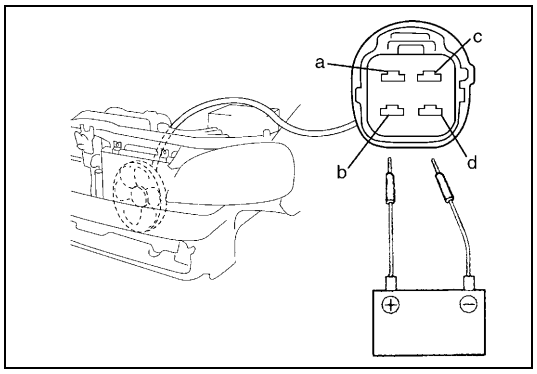

3) Connect battery to radiator/condenser cooling fan motor terminal “a” – “b” and “c” – “d” as shown in figure, then check that the radiator/condenser cooling fan motor operates smoothly.

Reference current of radiator/condenser cooling fan motor at 12 V
“a” – “b” : 7.8 – 11.8 A
“c” – “d” : 4.8 – 8.8 A

COOLING UNIT (EVAPORATOR)

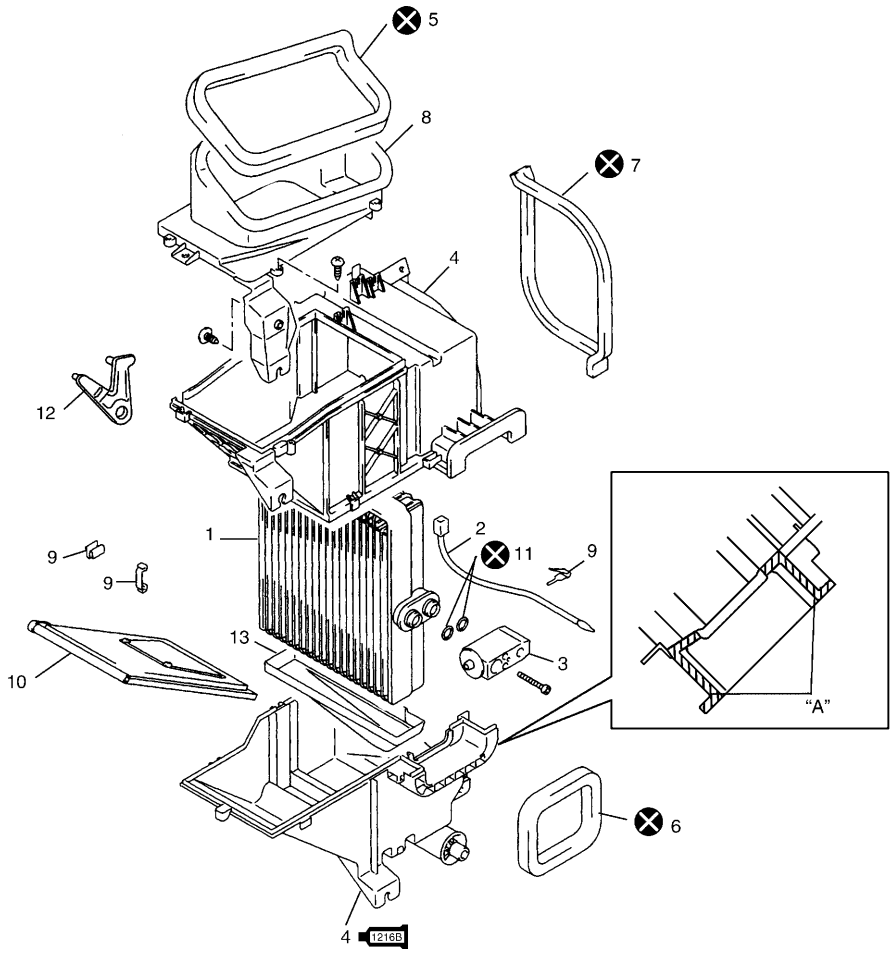

	1. A/C evaporator	6. Dash packing	11. O-ring
	2. A/C evaporator temperature sensor	7. Packing	12. Door link
	3. Expansion valve	8. Fresh air duct case	13. Lower packing
1216B	4. Evaporator case : Apply sealant 99000-31160 to hatched part "A".	9. Clamp	⊗ Do not reuse.
	5. Cooling unit packing	10. Air inlet door	

CAUTION:

Be careful not to damage A/C evaporator fins. If A/C evaporator fin is bent, straighten it by using flat head screwdriver or pair of pliers.

REMOVAL

1) Disconnect negative (–) cable at battery.
2) Recover refrigerant from A/C system by referring to "RECOVERY" in this section.

NOTE:

The amount of removed compressor oil must be measured for replenishing compressor oil.

3) Remove glove box.

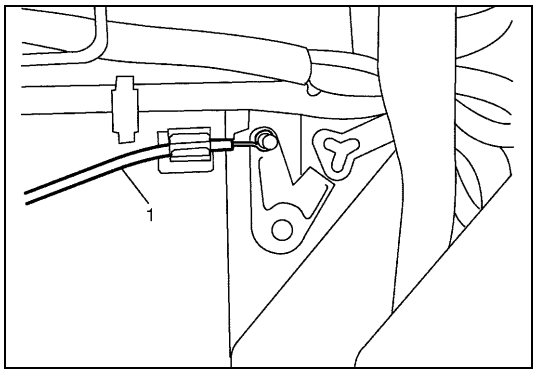

4) Remove fresh air control cable (1) and A/C evaporator temperature sensor coupler.

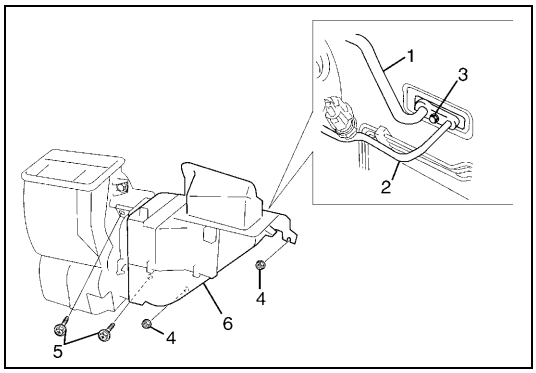

5) Disconnect suction hose (1) and condenser outlet hose (2) by removing attaching bolt (3).
6) Remove cooling unit mounting nuts (4) and screws (5).
7) Remove cooling unit (6).

INSPECTION

Check the following.

- Clog of A/C evaporator fins.
  If any clogs are found, A/C evaporator fins should be washed with water, and should be dried with compressed air.
- A/C evaporator fins for leakage and breakage.
  If any defects are found, repair or replace A/C evaporator.
- A/C evaporator fittings for leakage.
  If any defects are found, repair or replace A/C evaporator.

INSTALLATION

Reverse removal procedure to install cooling unit noting the following instructions.

- If A/C evaporator temperature sensor removed, its should be reinstalled in original position.
- Replenish specified amount of compressor oil to compressor suction side by referring to “REPLENISHING COMPRESSOR OIL” in this section.

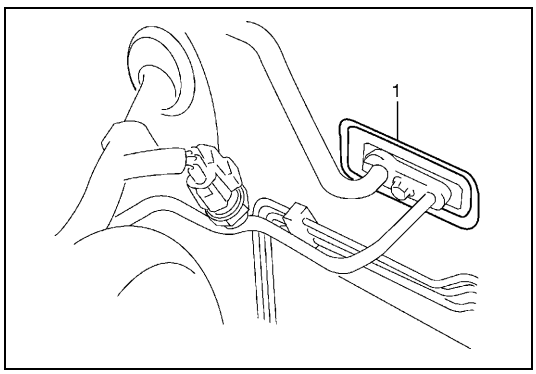

- Install uniformly the packing (1) to installation hole.
- Evacuate and charge refrigerant by referring to “EVACUATING” and “CHARGING” in this section.
- Adjust fresh air control cable, refer to “HEATER LEVER ASSEMBLY” in Section 1A.

A/C EVAPORATOR TEMPERATURE SENSOR

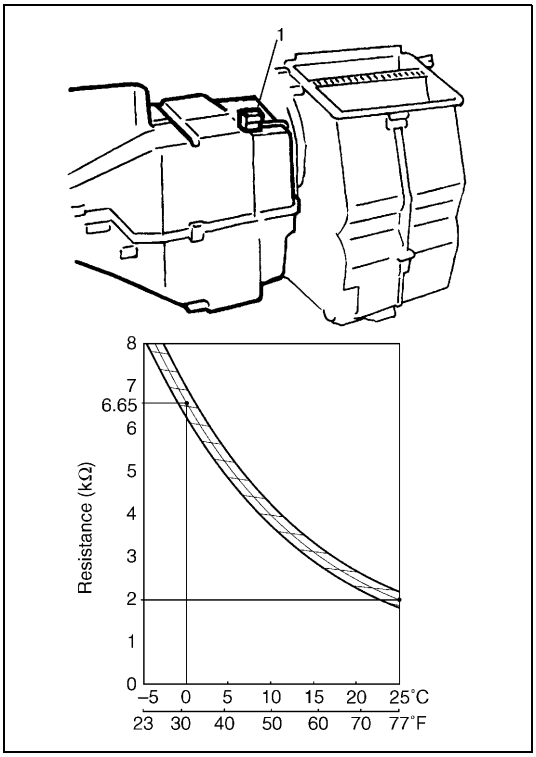

Check resistance between terminals for A/C evaporator temperature sensor (1).
If check results are as not specified, replace A/C evaporator temperature sensor.

A/C evaporator temperature sensor resistance

Sensor Temperature	Resistance
0°C (32°F)	6.4 – 6.9 kΩ
25°C (77°F)	1.8 – 2.2 kΩ

NOTE:

When A/C evaporator temperature sensor removed, its should be reinstalled in original position.

EXPANSION VALVE

REMOVAL

1) Disconnect negative (–) cable at battery.
2) Recover refrigerant from A/C system by referring to "RECOVERY" in this section.

NOTE:

The amount of removed compressor oil must be measured for replenishing compressor oil.

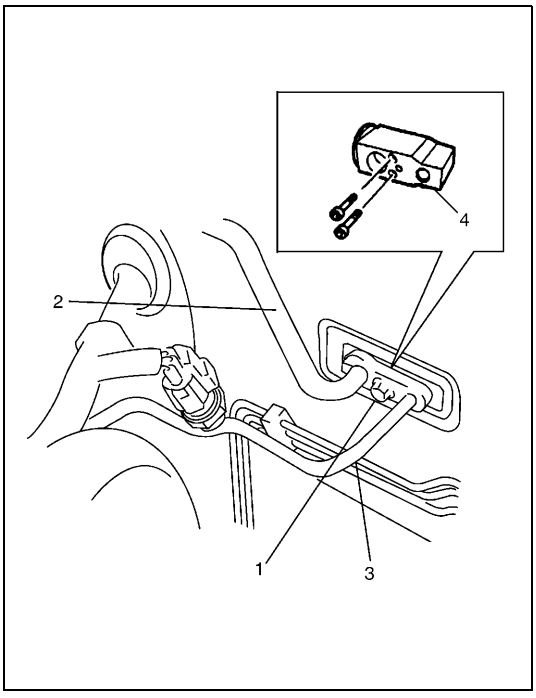

3) Remove attaching bolt (1).
4) Remove suction hose (2) and receiver/dryer outlet pipe (3) from expansion valve (4).
5) Remove expansion valve (4).

INSTALLATION

Reverse removal procedure to install expansion valve noting the following instructions.

- Replenish specified amount of compressor oil to compressor suction side by referring to "REPLENISHING COMPRESSOR OIL" in this section.
- Evacuate and charge refrigerant by referring to "EVACUATING" and "CHARGING" in this section.

INSPECTION

Refer to "PERFORMANCE DIAGNOSIS" in this section.

A/C REFRIGERANT PRESSURE SWITCH

INSPECTION

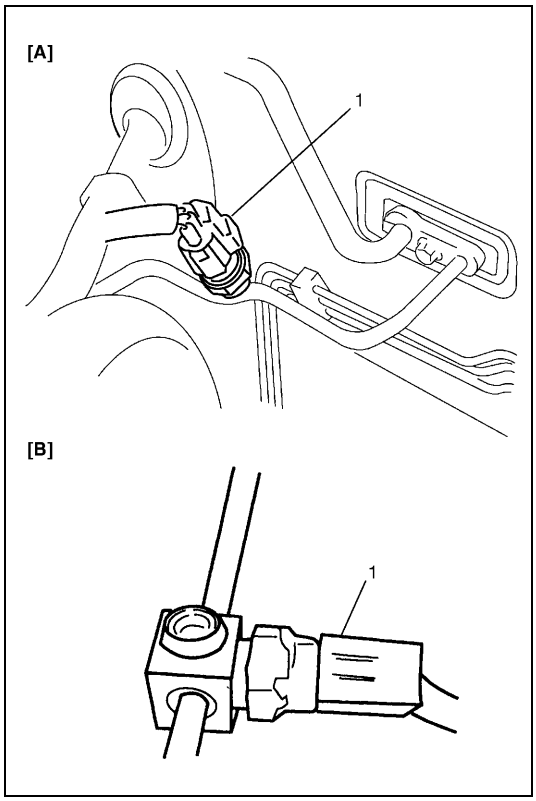

1) Check A/C refrigerant pressure switch (1) for continuity at normal temperature (approximately 25°C (77°F)) when A/C system has a proper charge of refrigerant and A/C system (compressor) is under operation. In each of these cases, switch should show proper continuity.

[A] : LH model
[B] : RH model

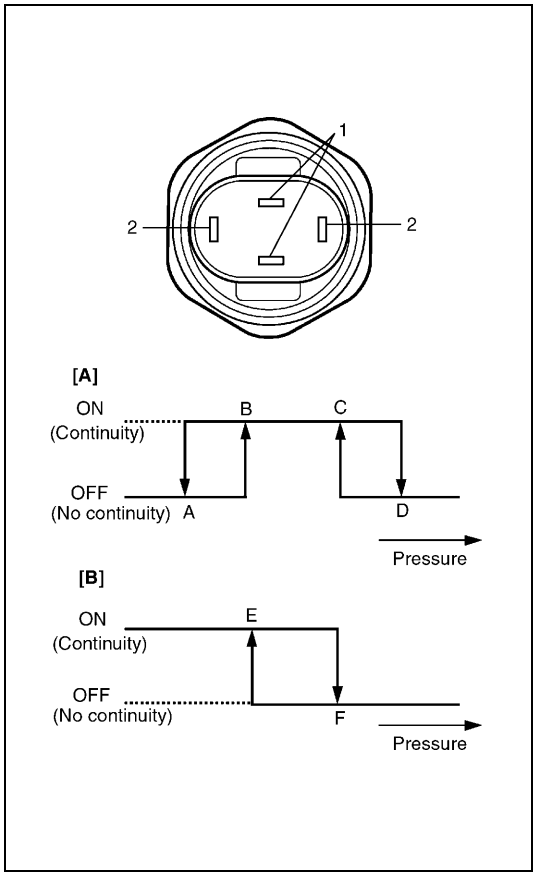

2) Check continuity between high and low pressure switch terminals (1) at specified pressure as shown.

High and low pressure switch specification

A : Approximately 200 kPa (2.0 kg/cm^2, 28.5 psi)

B : Approximately 230 kPa (2.3 kg/cm^2, 32.5 psi)

C : Approximately 2600 kPa (26 kg/cm^2, 370 psi)

D : Approximately 3200 kPa (32 kg/cm^2, 455 psi)

3) Check continuity between medium pressure switch terminals (2) at specified pressure as shown as shown.

Medium pressure switch specification

E : Approximately 1100 kPa (11 kg/cm^2, 156 psi)

F : Approximately 1500 kPa (15 kg/cm^2, 213 psi)

Tightening torque

A/C refrigerant pressure switch :

11 N·m (1.1 kg-m, 8.0 lb-ft)

[A] : High and low pressure
[B] : Middle pressure

A/C SWITCH

REMOVAL AND INSTALLATION

Refer to “HEATER CONTROL ASSEMBLY” in Section 1A.

INSPECTION

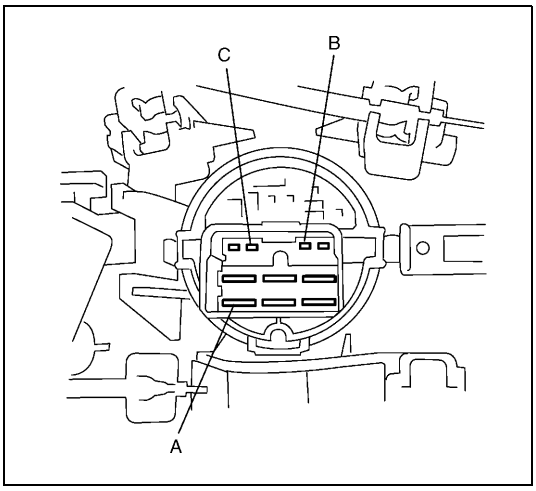

- Press A/C switch button and check if there is continuity between terminals “A” and “B”.
- Connect battery voltage (+) to terminal “C” and (–) to terminal “A”, and then press A/C Switch button and check if indicator lamp lights.

RADIATOR/CONDENSER COOLING FAN MOTOR RELAY No.1, No.2 and No.3

INSPECTION

Refer to “RADIATOR FAN RELAY” in Section 6B.

COMPRESSOR

REMOVAL

1) Run engine at idle speed with air conditioning ON for 10 minutes. After that stop the engine.
2) Disconnect negative (–) cable at battery.
3) Recover refrigerant from refrigeration system by referring to “RECOVERY” in this section.

NOTE:

The amount of removed compressor oil must be measured for replenishing compressor oil.

4) Remove front bumper by referring to “FRONT BUMPER” in Section 8.
5) Remove engine food cover (1) from vehicle body.

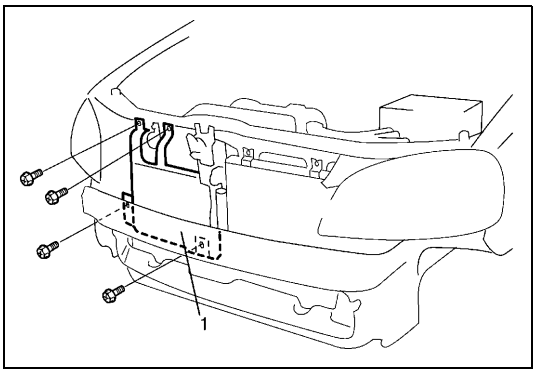

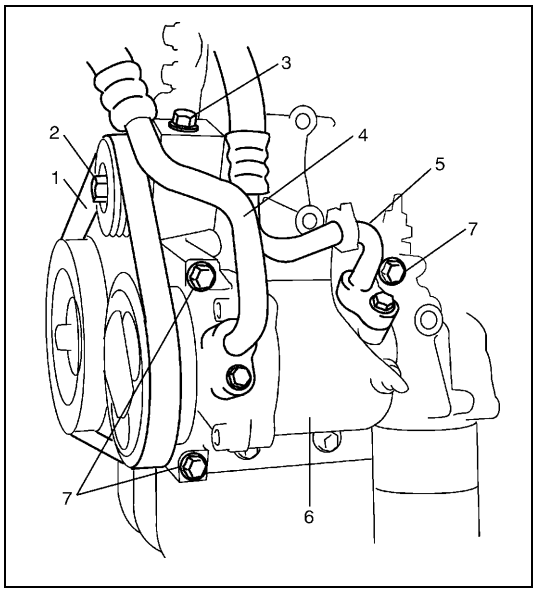

6) Remove compressor drive belt (1) by loosening tension pulley nut (2) and adjusting bolt (3).
7) Disconnect magnet clutch lead wire coupler.
8) Disconnect suction pipe (4) and discharge hose (5) from compressor (6).

NOTE:

Cap open fittings immediately to keep moisture out of system.

9) Remove compressor mounting bolts (7), and then remove compressor (6) from its bracket.

INSTALLATION

Reverse removal procedure to install compressor noting the following instructions.

- If compressor is replaced, pour new compressor oil by referring to “REPLENISHING COMPRESSOR OIL” in this section.
- Evacuate and charge system by referring to “RECOVERY” in this section.
- Adjust drive belt tension by referring to “COMPRESSOR DRIVE BELT” in this section.

MAGNET CLUTCH

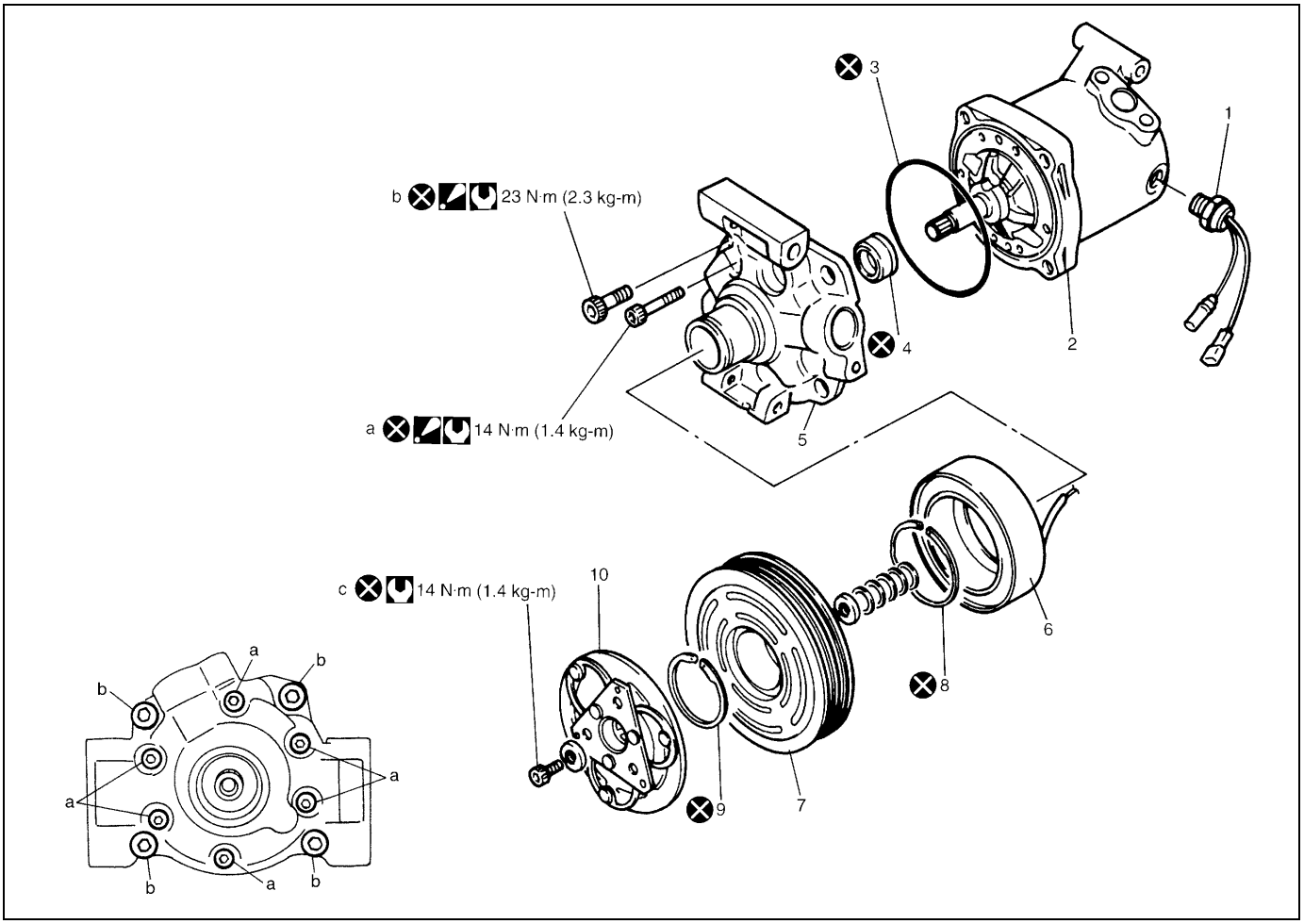

1. Compressor thermal switch	6. Clutch coil	a. Front head bolt : Tighten bolt (a) first, and next (b)
2. Compressor body	7. Clutch pulley	b. Front head bolt : Tighten bolt (a) first, and next (b)
3. O-ring	8. Circlip	c. Clutch plate bolt
4. Lip type seal	9. Circlip	Tightening torque
5. Front head	10. Clutch plate	Do not reuse.

INSPECTION

- Check clutch plate and clutch pulley for wear and oil soaked conditions respectively.
- Check clutch pulley bearing for noise, wear and grease leakage.

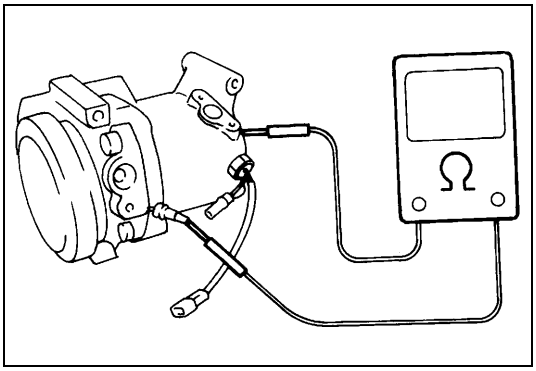

- Measure clutch coil for resistance at 20°C (68°F).
  If the measured resistance does not remain within tolerance, replace magnet clutch assembly.

Clutch coil resistance
: 3.4 – 4.1 Ω

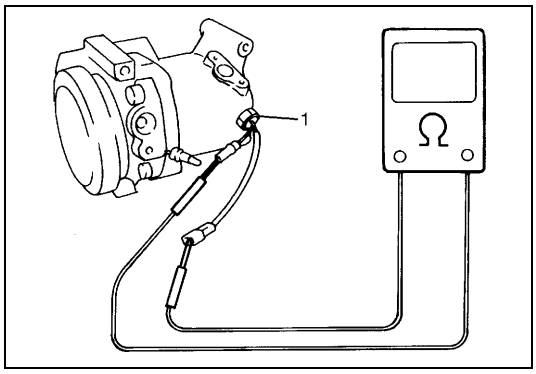

- Use an ohmmeter to check thermal switch (1) for continuity. If it is no continuity, replace it.

REMOVAL

1) Remove compressor from vehicle. Refer to "COMPRESSOR" in this section.

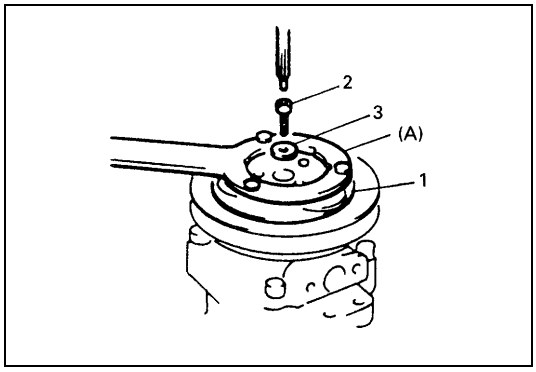

2) Fix clutch plate (1) with special tool and remove clutch plate bolt (2) and washer (3).

Special tool
(A) : 09991-06020

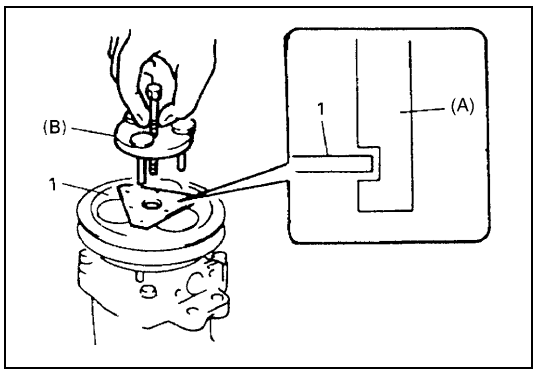

3) Using special tool, remove clutch plate (1).

Special tool
(A) : 09991-06030

4) Remove shims from shaft.

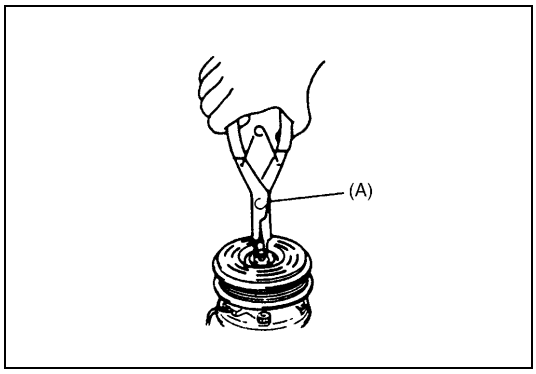

5) Using special tool, remove circlip.

Special tool
(A) : 09900-06107

6) Remove clutch coil lead wire clamp by loosening its screw and disconnect clutch coil lead wire from thermal switch lead wire.

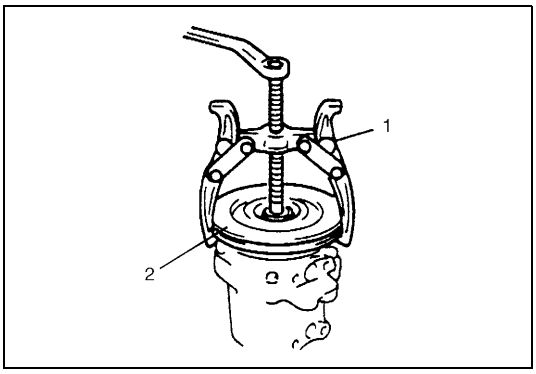

7) Remove clutch pulley (2) with puller (1).

NOTE:

- **Be careful not to damage pulley when tapping clutch pulley.**
- **Be careful not to scratch bearing.**

8) Remove clutch coil.

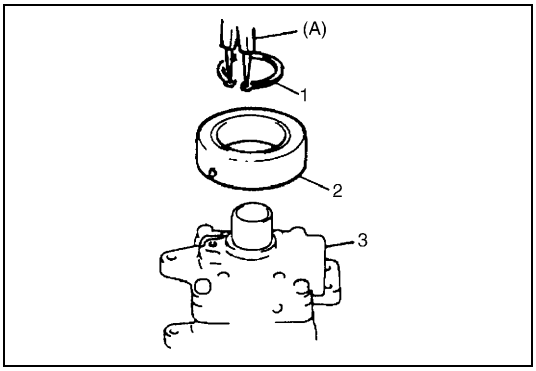

9) Remove circlip (1) by using special tool.

Special tool
(A) : 09900-06107

10) Remove clutch coil (2) from compressor (3).

INSTALLATION

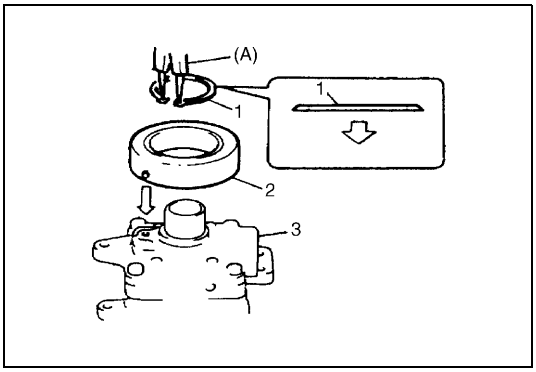

1) Install clutch coil (2).
   Protrusion on under side of clutch coil must match hole in compressor (3) to prevent movement ant correctly locate lead wire.
2) Using special tool, install new circlip (1) as shown.

Special tool
(A) : 09900-06107

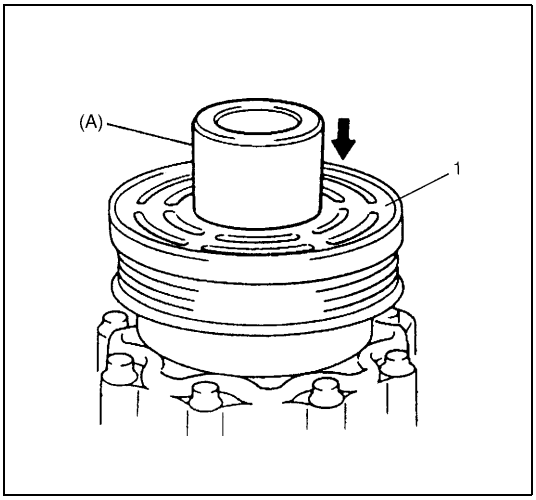

3) Install clutch pulley (1).
   a) Set clutch pulley (1) squarely over clutch pulley installation boss.
   b) Place special tool onto clutch coil bearing.
      Ensure that edge rests only on inner race of bearing.

Special tool
(A) : 09991-06010

   c) Install circlip.

CAUTION:
Be careful not to scratch bearing seal.

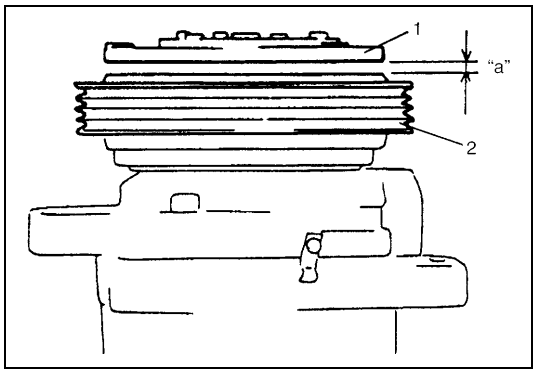

4) Adjust clearance, between clutch plate (1) and clutch pulley (2) by putting shim on compressor shaft.

Clearance between clutch plate and clutch pulley
"a" : 0.3 – 0.6 mm (0.012 - 0.024 in.)

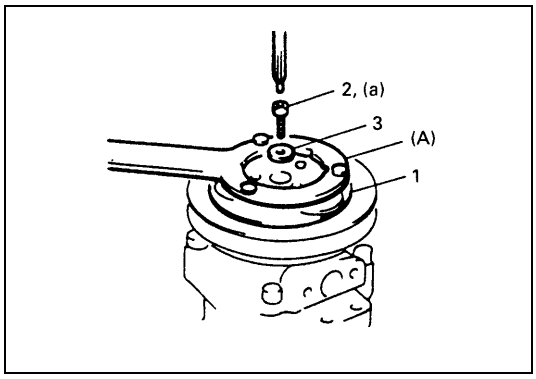

5) Tighten new clutch plate bolt (2) to specified torque as shown.

Tightening torque
Clutch plate bolt (a) : 14 N·m (1.4 kg-m, 10.5 lb-ft)

Special tool
(A) : 09991-06020

1.	Clutch plate
3.	Washer

LIP TYPE SEAL

REMOVAL

1) Remove magnet clutch referring to "MAGNET CLUTCH" in this section.

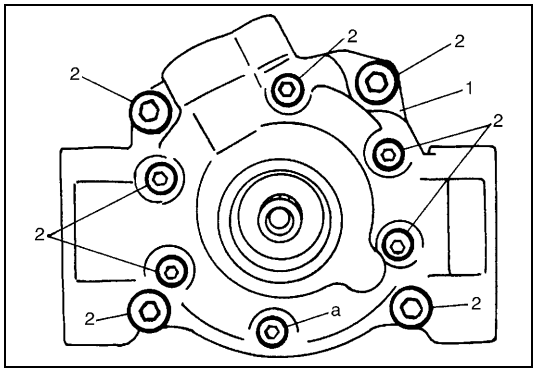

2) Remove front head (1) mounting bolts (2).

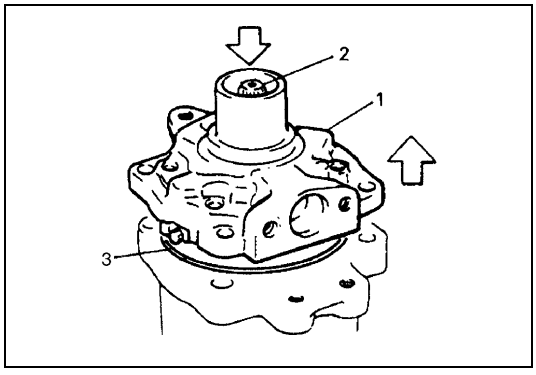

3) Remove front head (1) by pushing cylinder shaft (2).

NOTE:
Be careful not to remove cylinder from front head.

4) Remove O-ring (3).

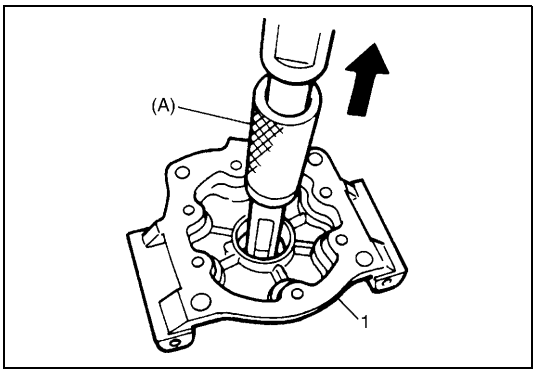

5) Remove lip type seal from front head (1) using special tool.

Special tool
(A) : 09923-73210

INSTALLATION

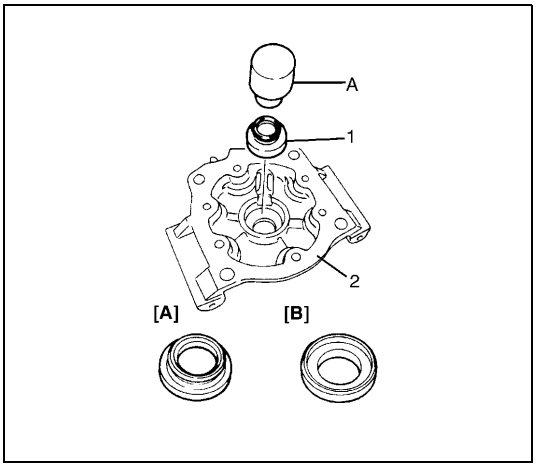

1) Press-fit new lip type seal (1) into front head (2) using special tool.

Special tool
(A) : 09991-06050

CAUTION:
Do not reuse lip type seal (1) once removed from compressor.

[A] :	Obverse side
[B] :	Back side

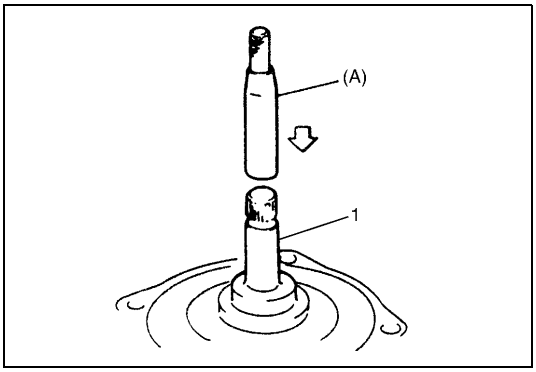

2) Coat special tool surface with oil and place it on cylinder shaft (1).

Special tool
(A) : 09991-06040

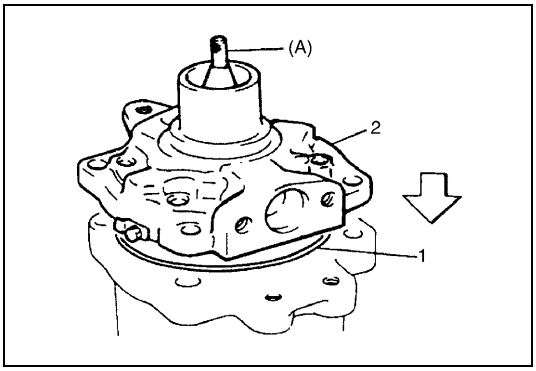

3) Install new O-ring (1) to case.
4) Apply compressor oil to lip type seal and O-ring (1).
5) Install front head (2).

Special tool
(A) : 09991-06040

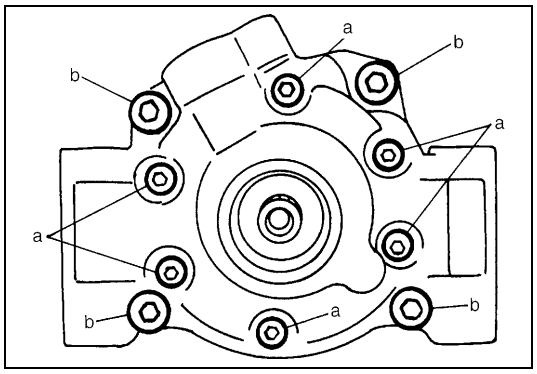

6) Tighten new front head mounting bolts (a), (b).

Tightening torque
Front head bolt (a) : 9 N·m (0.9 kg-m, 6.5 lb-ft)
Front head bolt (b) : 22 N·m (2.2 kg-m, 16.0 lb-ft)

NOTE:

- **Be sure to use new front head mounting bolts.**
- **Tighten bolt (a) first, and next (b).**

REQUIRED SERVICE MATERIAL

Material	Recommended SUZUKI product (Part Number)	Use
Compressor oil (Refrigerant oil)	COMPRESSOR OIL RS20 (150 cc) 99000-99088	• O-ring • Each component
Refrigerant	REFRIGERANT DRUM (200 g) 95794-50G00	• Refrigerant charge
Sealant	SUZUKI BOND No.1216B 99000-31160	• Cooling unit

SPECIAL TOOL

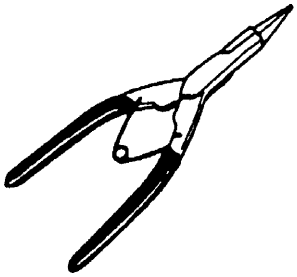 09900-06107 Snap ring pliers (Opening type)	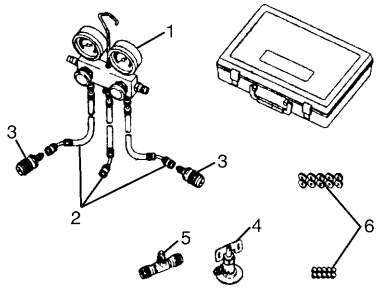 09990-06010 Manifold gauge set See NOTE below.		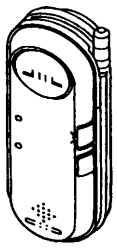 09990 -86011 Gas leak detector
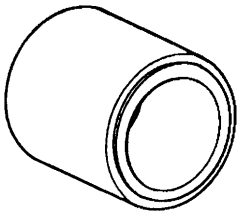 09991-06010 Magnet clutch pulley installer	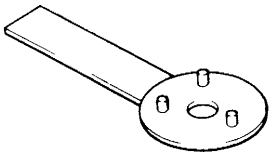 09991-06020 Armature plate spanner	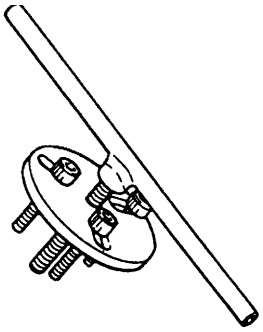 09991-06030 Armature plate remover	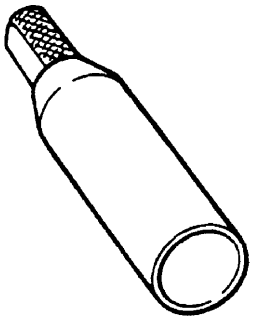 09991-06040 Lip type seal protector
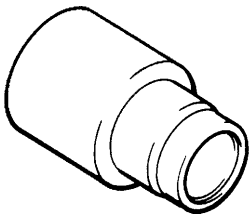 09991-06050 Lip type seal installer	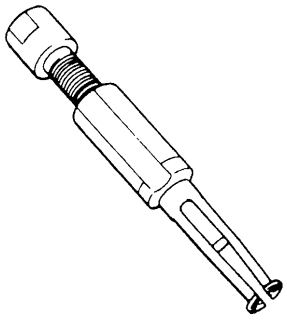 09923-73210 Bearing remover		

NOTE:

This kit includes the following items.

1. Manifold gauge, 2. Changing hose, 3. Quick connector, 4. Refrigerant container tap valve, 5. Refrigerant container T joint, 6. Packing set

SECTION 3

STEERING, SUSPENSION, WHEELS AND TIRES

DIAGNOSIS **3-2**
FRONT END ALIGNMENT . . . . . **Section 3A**
MANUAL RACK AND PINION . . . . . **Section 3B**
ELECTRICAL POWER STEERING (P/S) SYSTEM . . . . . **Section 3B1**
STEERING WHEEL AND COLUMN . . . . . **Section 3C**
FRONT SUSPENSION . . . . . **Section 3D**
REAR SUSPENSION . . . . . **Section 3E**
WHEELS AND TIRES . . . . . **Section 3F**

CONTENTS

DIAGNOSIS 3-2
GENERAL DIAGNOSIS 3-2
DIAGNOSIS TABLE 3-2
TIRE DIAGNOSIS 3-5
IRREGULAR AND/OR PREMATURE WEAR 3-5
WEAR INDICATORS 3-5
RADIAL TIRE WADDLE 3-6
RADIAL TIRE LEAD 3-7
VIBRATION DIAGNOSIS 3-7

DIAGNOSIS

GENERAL DIAGNOSIS

Since the problems in steering, suspension, wheels and tires involve several systems, they must all be considered when diagnosing a complaint. To avoid using the wrong symptom, always road test the vehicle first. Proceed with the following preliminary inspection and correct any defects which are found.

1) Inspect tires for proper pressure and uneven wear.
2) Raise vehicle on a hoist and inspect front and rear suspension and steering system for loose or damaged parts.
3) Spin front wheels. Inspect for out-of-round tires, out-of-balance tires, bent rims, loosen and/or rough wheel bearings.

DIAGNOSIS TABLE

Condition	Possible Cause	Correction
Vehicle Pulls (Leads)	Mismatched or uneven tires	Replace tire.
	Tires not adequately inflated	Adjust tire pressure.
	Broken or sagging springs	Replace spring.
	Radial tire lateral force	Replace tire.
	Disturbed front end alignment	Check and adjust front end alignment.
	Brake dragging in one road wheel	Repair brake.
	Loose, bent or broken front or rear suspension parts	Tighten or replace suspension parts.
Abnormal or Excessive Tire Wear	Sagging or broken spring	Replace spring.
	Tire out of balance	Adjust balance or replace tire.
	Disturbed front end alignment	Check and adjust front end alignment.
	Faulty strut (shock absorber)	Replace strut.
	Hard driving	Replace tire.
	Overloaded vehicle	Replace tire.
	Not rotating tire	Replace or rotate tire.
	Worn or loose wheel bearing	Replace wheel bearing.
	Wobbly wheel or tire	Replace wheel or tire.
	Tires not adequately inflated	Adjust tire pressure.
Wheel Tramp	Blister or bump on tire	Replace tire.
	Improper strut (shock absorber) action	Replace strut.
Shimmy, Shake or Vibration	Tire or wheel out of balance	Balance wheels or replace tire and/or wheel.
	Loosen wheel bearings	Replace wheel bearing.
	Worn tie rod ends	Replace tie rod end.
	Worn lower ball joints	Replace front suspension arm.
	Excessive wheel runout	Repair or replace wheel and/or tire.
	Blister or bump on tire	Replace tire.
	Excessively loaded radial runout of tire/wheel assembly	Replace tire or wheel.
	Disturbed front end alignment	Check and adjust front end alignment.
	Loose or worn steering linkage	Tighten or replace steering linkage.
	Loose steering gear case bolts	Tighten case bolts.

Condition	Possible Cause	Correction
Hard Steering	Tire not adequately inflated	Inflate tires to proper pressure.
	Malfunction of power steering system	Check and correct.
	Bind in tie rod end ball studs or lower ball joints	Replace tie rod end or front suspension arm.
	Disturbed front end alignment	Check and adjust front end alignment.
	Rack and pinion adjustment	Check and adjust rack and pinion torque.
	Bind in steering column	Repair or replace.
Too Much Play in Steering	Wheel bearings worn	Replace.
	Loose steering gear case bolts	Tighten.
	Rack and pinion adjustments	Check and adjust rack and pinion torque.
	Worn steering shaft joints	Replace joint.
	Worn tie rod ends or tie rod inside ball joints	Replace tie rod end or tie rod.
	Worn lower ball joints	Replace front suspension control arm.
Poor Returnability	Bind in tie rod end ball studs	Replace tie rod end.
	Bind in ball joints	Replace.
	Bind in steering column	Repair or replace.
	Poorly lubricated rack and pinion	Check, repair or lubricate rack and pinion.
	Disturbed front end alignment	Check and adjust front end alignment.
	Rack and pinion adjustment	Check and adjust rack and pinion torque.
	Tires not adequately inflated	Adjust tire pressure.
Rack and Pinion Noise (Rattle or Chuckle)	Loose steering gear case bolts	Tighten.
	Worn rack bush	Replace.
	Rack and pinion adjustment	Check and adjust rack and pinion torque.
Abnormal Noise, Front End	Worn, sticky or loose tie rod ends, lower ball joints, tie rod inside ball joints or drive shaft joints	Replace tie rod end, suspension arm, tie rod or drive shaft joint.
	Damaged struts or mountings	Repair or replace.
	Worn suspension arm bushings	Replace.
	Loose stabilizer bar	Tighten bolts or nuts, replace bushes.
	Loose wheel nuts	Tighten wheel nuts.
	Loose suspension bolts or nuts	Tighten suspension bolts or nuts.
	Broken or otherwise damaged wheel bearings	Replace.
	Broken suspension springs	Replace.
	Poorly lubricated or worn strut bearings	Replace strut bearing.

Condition	Possible Cause	Correction
Wander or Poor Steering Stability	Mismatched or uneven tires	Replace or inflate tires to proper pressure.
	Loosen ball joints and tie rod ends	Replace suspension arm or tie rod end.
	Faulty struts or mountings	Replace strut or repair mounting.
	Loose stabilizer bar	Tighten or replace stabilizer bar or bush.
	Broken or sagging springs	Replace spring.
	Rack and pinion adjustment	Check and adjust rack and pinion torque.
	Disturbed front end alignment	Check and adjust front end alignment.
Erratic Steering When Braking	Worn wheel bearings	Replace.
	Broken or sagging springs	Replace coil spring.
	Wheel tires are inflated unequally	Inflate tires to proper pressure.
	Disturbed front end alignment	Check and adjust front end alignment.
	Brakes not working in unison	Check and adjustment brake system.
	Leaking wheel cylinder or caliper	Repair or replace wheel cylinder or caliper.
	Warped discs	Replace brake disc.
	Badly worn brake linings	Replace brake shoe lining.
	Drum is out of round in some brakes	Replace brake drum.
	Defective wheel cylinders	Replace or repair wheel cylinder.
Low or Uneven Trim Height **NOTE:** **See NOTE *1.**	Broken or sagging springs	Replace.
	Over loaded	Check loading.
	Incorrect springs	Replace.
Ride Too Soft	Faulty struts (shock absorber)	Replace strut.
Suspension Bottoms	Overloaded	Check loading.
	Faulty struts (shock absorber)	Replace strut.
	Incorrect, broken or sagging springs	Replace.
Body Leans or Sways in Corners	Loose stabilizer bar	Tighten stabilizer bar bolts or nuts, or replace bushes.
	Faulty struts (shock absorbers) or mountings	Replace strut or tighten mounting.
	Broken or sagging springs	Replace.
	Overloaded	Check loading.
Cupped Tires	Front struts defective	Replace.
	Worn wheel bearings	Replace.
	Excessive tire or wheel run-out	Replace tire or wheel disc.
	Worn ball joints	Replace front suspension arm.
	Tire out of balance	Adjust tire balance.

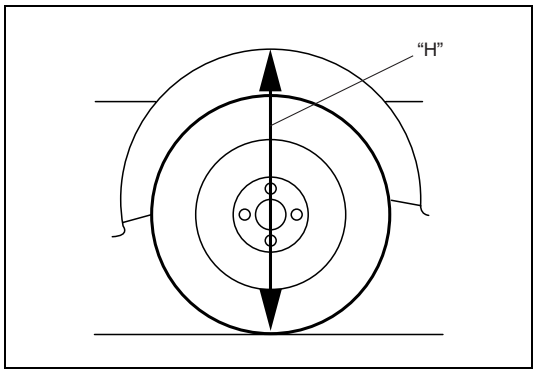

NOTE:

***1: Right-to-left trim height ("H") difference should be within 15 mm (0.6 in.) with curb weight. (same with rear side.)**

TIRE DIAGNOSIS

IRREGULAR AND/OR PREMATURE WEAR

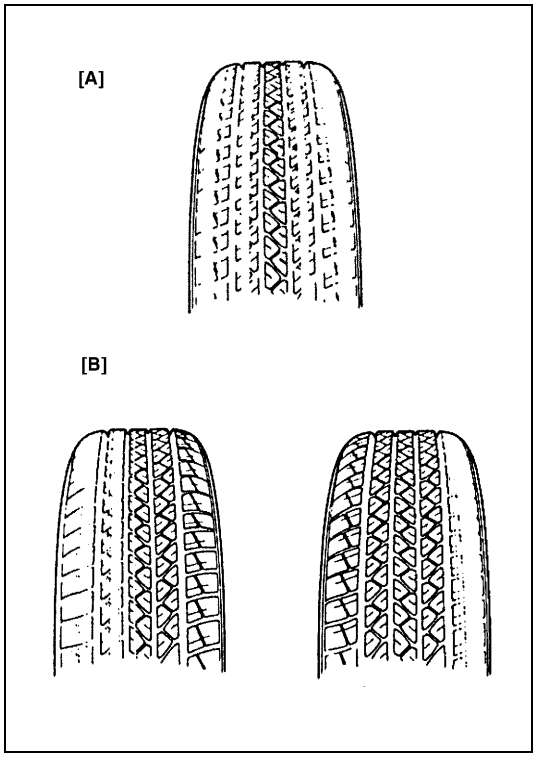

Irregular and premature wear has many causes. Some of them are: incorrect inflation pressures, lack of tire rotation, driving habits, improper alignment.

If the following conditions are noted, rotation is necessary:

- Front tire wear is different from rear.
- Uneven wear exists across the tread of any tire.
- Front tire wear is unequal between the right and left.
- Rear tire wear is unequal between the right and left.
- There is cupping, flat spotting, etc.

A wheel alignment check is necessary if following conditions are noted:

- Front tire wear is unequal between the right and left.
- Wear is uneven across the tread of any front tire.
- Front tire treads have scuffed appearance with "feather" edges on one side of tread ribs or blocks.

[A] :	Hard Cornering, under inflation or lack of tire rotation
[B] :	Incorrect wheel alignment, tire construction not uniform or wheel heavy acceleration

WEAR INDICATORS

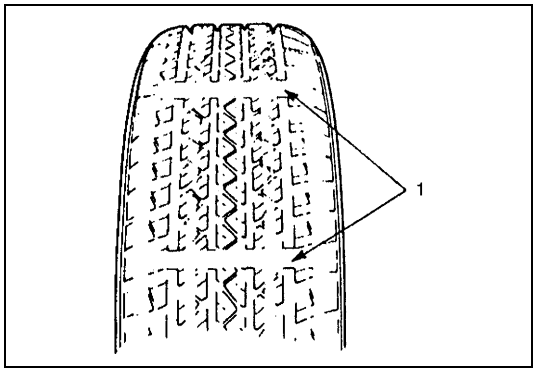

Original equipment tires have built-in tread wear indicators (1) to show when they need replacement.

These indicators (1) will appear as 12 mm (0.47 in) wide bands when the tire tread depth becomes 1.6 mm (0.063 in).

When the indicators (1) appear in 3 or more grooves at 6 locations, tire replacement is recommended.

RADIAL TIRE WADDLE

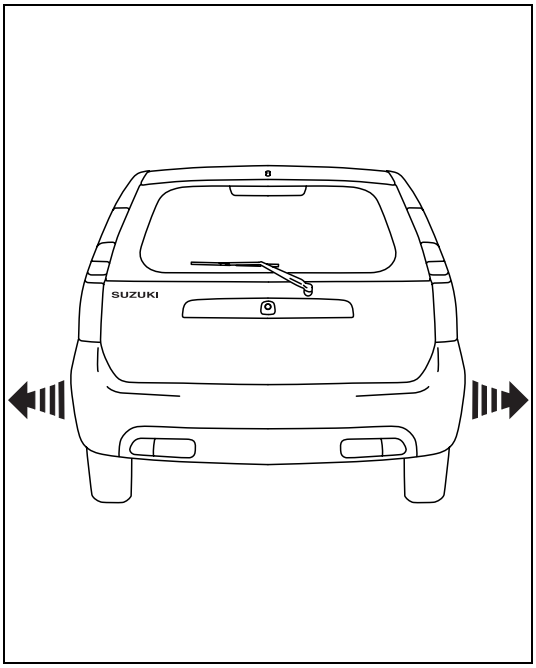

Waddle is side to side movement at the front and/or rear of the vehicle. It is caused by the steel belt not being straight within the tire. It is most noticeable at a low speed, 8 to 48 kph (5 to 30 mph).

It is possible to locate the faulty tire by road testing the vehicle. If it is on the rear, the rear end of the vehicle shakes from side to side or “waddles”. To the driver in the seat, it feels as though someone is pushing on the side of vehicle.

If the faulty tire is on the front, waddling is more visual. The front sheet metal appears to be moving back and forth and the driver feels as though he is at the pivot point in vehicle.

Waddle can be quickly diagnosed by using Tire Problem Detector (TPD) and following the equipment manufacture’s recommendations.

If TPD is not available, an alternative method of substituting known-good tire/wheel assemblies can be used as follows, although it takes a longer time.

1) Ride vehicle to determine whether the front or rear waddles.
2) Install tires and wheels that are known to be good (on similar vehicle) in place of those on waddling end of vehicle. If waddling end cannot be identified, substitute rear ones.
3) Road test again. If improvement is noted, reinstall originals one at a time till waddle causal tire is found. If no improvement is noted, install known-good tires in place of all four. Then reinstall originals in the same manner as above.

EQUIPMENT MANUFACTURE’S RECOMMENDATIONS

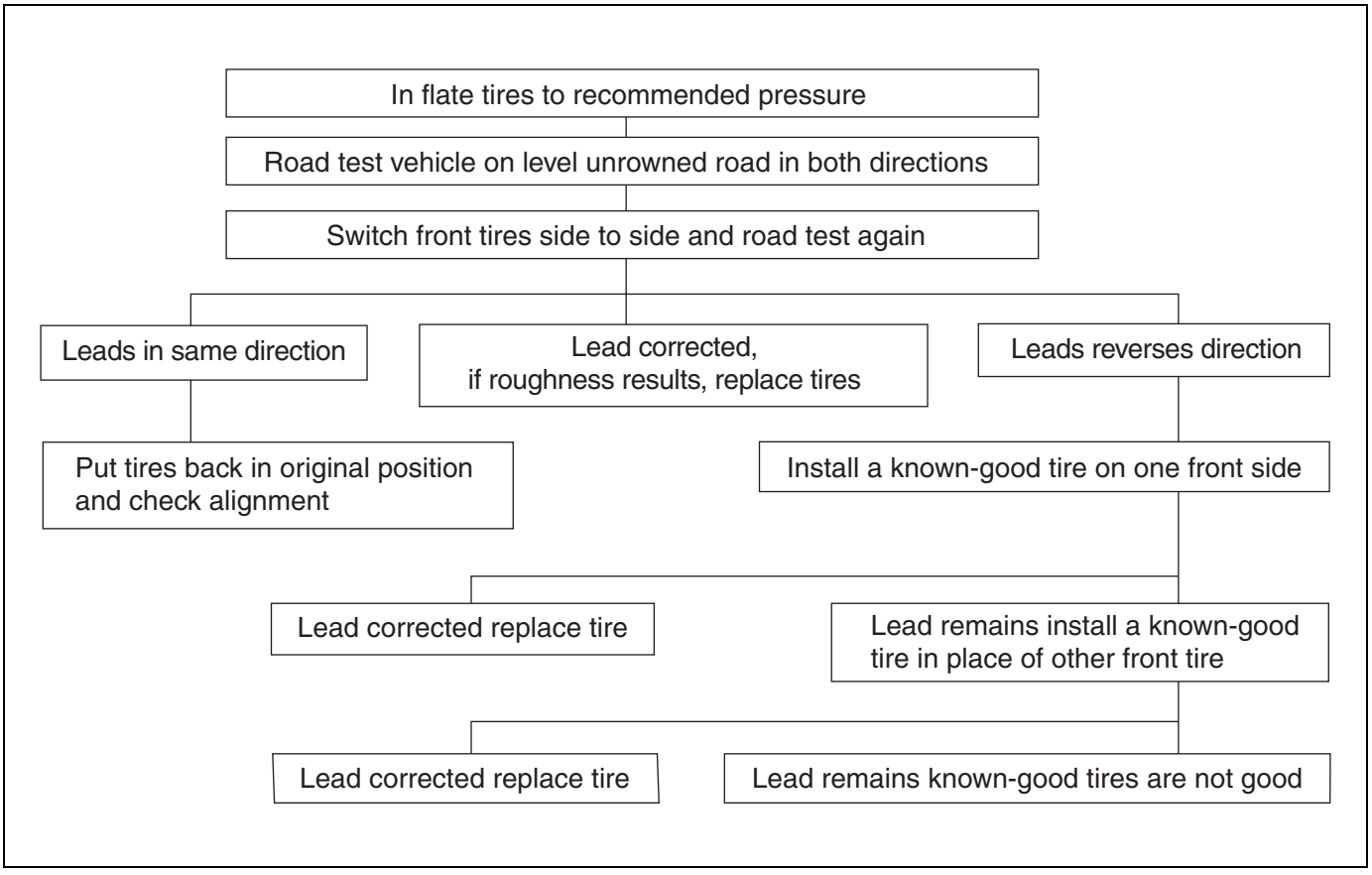
In flate tires to recommended pressure
Road test vehicle on level unrowned road in both directions
Switch front tires side to side and road test again
Leads in same direction
Lead corrected,
if roughness results, replace tires
Leads reverses direction
Put tires back in original position
and check alignment
Install a known-good tire on one front side
Lead corrected replace tire
Lead remains install a known-good
tire in place of other front tire
Lead corrected replace tire
Lead remains known-good tires are not good

RADIAL TIRE LEAD

"Lead" is the deviation of the vehicle from a straight path on a level rod even with no pressure on the steering wheel.

Lead is usually caused by:

- Incorrect alignment.
- Uneven brake adjustment.
- Tire construction.

The way in which a tire is built can produce lead in a vehicle. An example of this is placement of the belt. Off center belts on radial tires can cause the tire to develop a side force while rolling straight down the road. If one side of the tire has a little larger diameter than the other, the tire will tend to roll to one side. This will develop a side force which can produce vehicle lead.

The procedure in above figure (Lead Diagnosis) should be used to make sure that front alignment is not mistaken for tire lead.

- Part of the lead diagnosis procedure is different from the proper tire rotation pattern currently in the owner and service manuals. If a medium to high mileage tire is moved to the other side of the vehicle, be sure to check that ride roughness has not developed
- Rear tires will not cause lead.

VIBRATION DIAGNOSIS

Wheel unbalance causes most of the highway speed vibration problems. If a vibration remains after dynamic balancing, its possible causes are as follows.

- Tire runout.
- Wheel runout.
- Tire stiffness variation.

Measuring tire and/or wheel free runout will uncover only part of the problem. All three causes, known as loaded radial runout, must be checked by using a Tire Problem Detector (TPD). If TPD is not available, alternative method of substituting known-good tire and wheel assemblies on the problem vehicle can be used, although it takes a longer time.

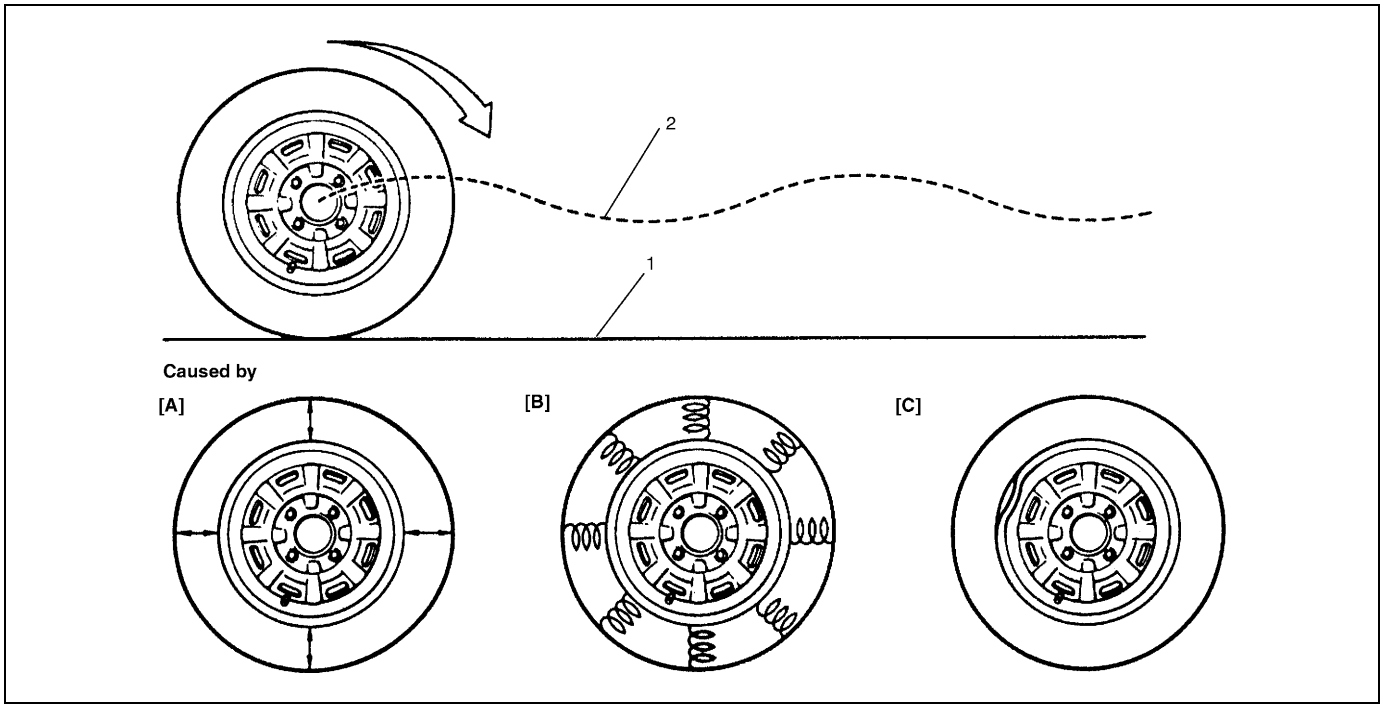

[A] : Tire out of round	1. Smooth road
[B] : Tire stiffness variation	2. Suspension movement (loaded runout)
[C] : Rim bent or out of round	

SECTION 3A

FRONT END ALIGNMENT

CONTENTS

GENERAL DESCRIPTION 3A-2
TOE SETTING 3A-2
CAMBER 3A-2
ALIGNMENT SERVICE DATA (REFERENCE) 3A-2
DIAGNOSIS 3A-3
DIAGNOSIS TABLE 3A-3
PRELIMINARY CHECKS PRIOR TO ADJUSTING FRONT ALIGNMENT 3A-3
TOE ADJUSTMENT 3A-3
CAMBER AND CASTER CHECK AND ADJUSTMENT 3A-4
STEERING ANGLE CHECK AND ADJUSTMENT 3A-4
SIDE SLIP (REFERENCE) 3A-4

GENERAL DESCRIPTION

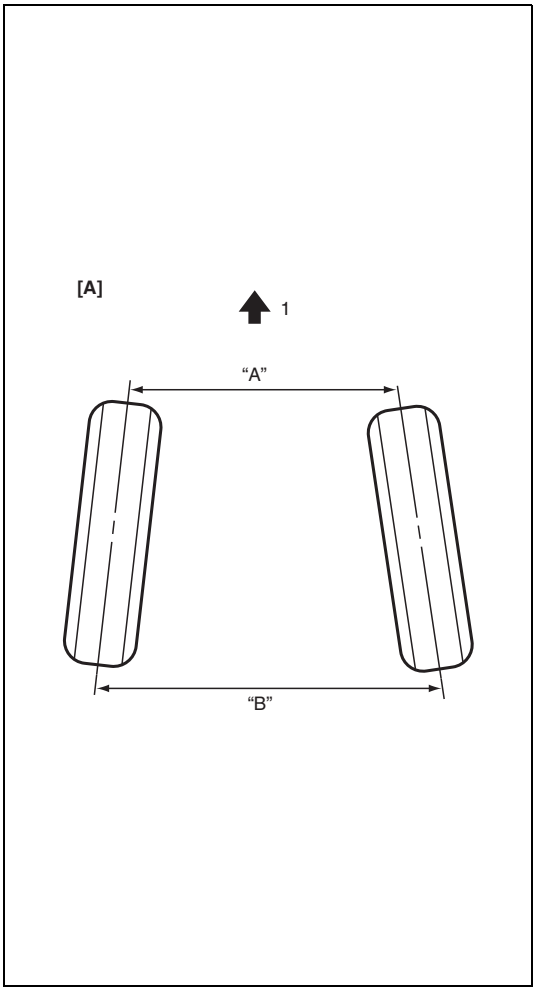

Front alignment refers to the angular relationship between the front wheels, the front suspension attaching parts and the ground. Generally, the only adjustment required for front alignment is toe setting.
Camber and caster can't be adjusted. Therefore, should camber or caster be out of specification due to the damage caused by hazardous road conditions or collision, whether the damage is in body or in suspension should be determined. If the body is damaged, it should be repaired and if suspension is damaged, it should be replaced.

TOE SETTING

Toe is the turning in or out of the front wheels. The purpose of a toe specification is to ensure parallel rolling of the front wheels (Excessive toe-in or toe-out may increase tire wear).

Toe-in
"B"-"A" : 0 ± 1 mm (0 ± 0.039 in.)

NOTE:
Toe-in value was measured by using a toe-in gauge.

For adjusting toe setting, refer to "TOE ADJUSTMENT" in this section.

[A]: Wheel top view
1. Forward

CAMBER

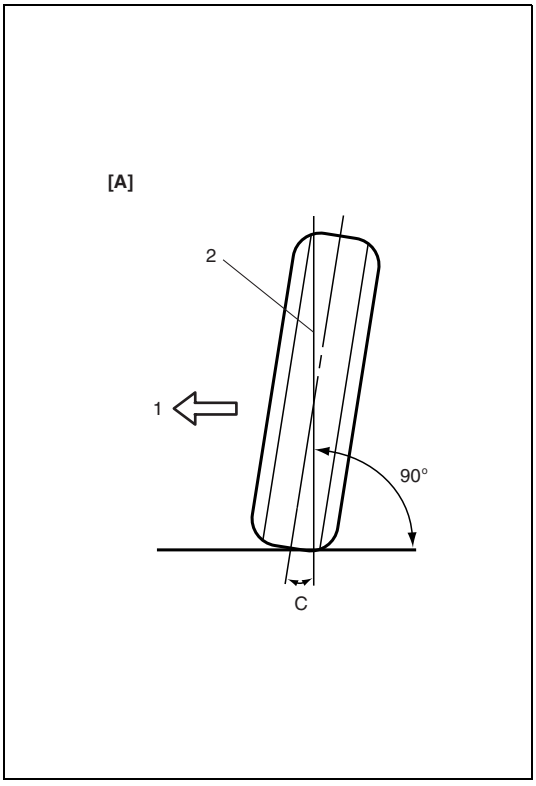

Camber is the tilting of the front wheels from the vertical, as viewed from the front of the vehicle. When the wheels tilt outward at the top, the camber is positive. When the wheels tilt inward at the top, the camber is negative. The amount of tilt is measured in degrees.

Camber "C"
2WD vehicle : –0° 20' ± 1°
4WD vehicle : 0° ± 1°

ALIGNMENT SERVICE DATA (REFERENCE)

Caster
2WD vehicle : 3° 25' ± 2°
4WD vehicle : 3° 35' ± 2°

Kingpin inclination
2WD vehicle : 12° 40' ± 2°
4WD vehicle : 12° 15' ± 2°

1. Body center	[A]: Front view
2. Center line of wheel	

DIAGNOSIS

DIAGNOSIS TABLE

For the details, refer to Section 3.

PRELIMINARY CHECKS PRIOR TO ADJUSTING FRONT ALIGNMENT

Steering and vibration complaints are not always the result of improper alignment. An additional item to be checked is the possibility of tire lead due to worn or improperly manufactured tires. “Lead” is the deviation of the vehicle from a straight path on a level road without hand pressure on the steering wheel. Procedure for determining the presence of a tire lead problem contains in SECTION 3. Before making any adjustment affecting toe setting, the following checks and inspections should be made to ensure correctness of alignment readings and alignment adjustments:

1) Check all tires for proper inflation pressures and approximately the same tread wear.
2) Check for loose of ball joints. Check tie rod ends; if excessive looseness is noted, it must be corrected before adjusting.
3) Check for run-out of wheels and tires.
4) Check vehicle trim heights; if out of limits and a correction is to be made, it must be made before adjusting toe.
5) Check for loose of suspension arms.
6) Check for loose or missing stabilizer bar attachments.
7) Consideration must be given to excess loads, such as tool boxes. If this excess load is normally carried in vehicle, it should remain in vehicle during alignment checks.
8) Consider condition of equipment being used to check alignment and follow manufacturer's instructions.
9) Regardless of equipment used to check alignment, vehicle must be on a level surface both fore and aft and transversely.

TOE ADJUSTMENT

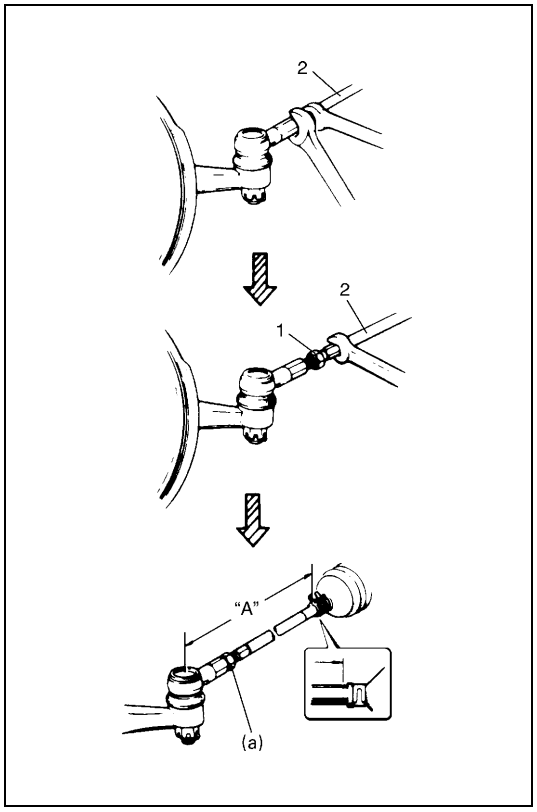

1) Loosen right and left tie rod end lock nuts (1) first.
2) Rotate right and left tie rods (2) by the same amount to align toe-in to specification. In this adjustment, right and left tie rods (2) should become equal in length “A”.

NOTE:

Before rotating tie rods (2), apply grease between tie rods and rack boots so that boots won't be twisted.

3) After adjustment, tighten lock nuts (1) to specified torque.

Tightening torque
Tie rod end lock nuts (a) : 45 N·m (4.5 kg-m, 32.5 lb-ft)

NOTE:

Make sure that rack boots are not twisted.

CAMBER AND CASTER CHECK AND ADJUSTMENT

Should camber or caster be found out of specifications upon inspection, locate its cause first.
If it is in damaged, loose, bent, dented or worn suspension parts, they should be replaced.
If it is in vehicle body, repair it so as to attain specifications.

NOTE:

To prevent possible incorrect reading of camber or caster, vehicle front end must be moved up and down a few times before inspection.

STEERING ANGLE CHECK AND ADJUSTMENT

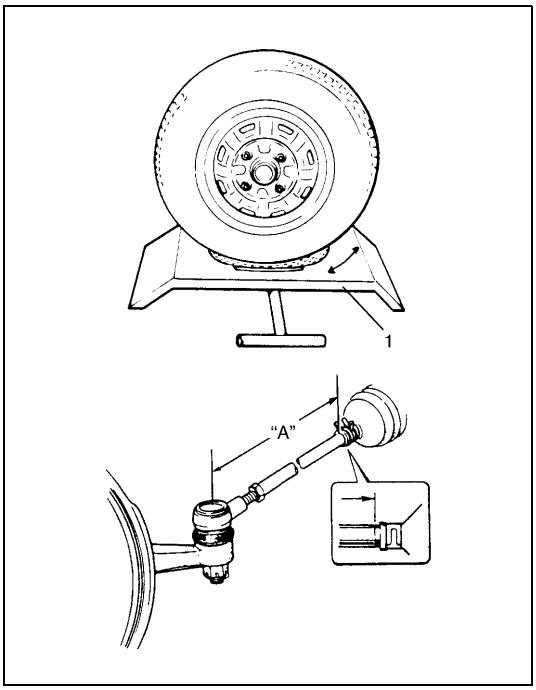

When tie rod or tie rod end was replaced, check toe and then also steering angle with turning radius gauge (1).
If steering angle is not correct, check if right and left tie rods are equal in length "A".

NOTE:

If tie rod lengths were changed to adjust steering angle, reinspect toe-in.

Steering angle
Inside : 35° ± 3°
Outside : 31° ± 3°

SIDE SLIP (REFERENCE)

For inspecting front wheel side slip with side slip tester:

Side slip limit
IN : 2 mm/m (0.079 in/3.3 ft)
OUT : 1 mm/m (0.039 in/3.3 ft)

If side slip exceeds above limit, toe-in or front wheel alignment may not be correct.

SECTION 3B

MANUAL RACK AND PINION

WARNING:

For vehicles equipped with a Air Bag System

- **Service on or around air bag system components or wiring must be performed only by an authorized suzuki dealer. Please observe all WARNINGS and CAUTIONS in SECTION 10B and Precautions, Air Bag System Components and Wiring Location view in Section 10B before performing service on or around air bag system components or wiring. Failure to follow WARNINGS could result in unintended activation of the system or could render the system inoperative. Either of these two conditions may result in severe injury.**
- **Technical service work must be started at least 90 seconds after the ignition switch is turned to the "LOCK" position and the negative cable is disconnected from the battery. Otherwise, the system may be deployed by reserve energy in the Sensing and Diagnostic Module (SDM).**

NOTE:

All steering gear fasteners are important attaching parts in that they could affect the performance of vital parts and systems, and/or could result in major repair expense. They must be replaced with one of the same part number or with an equivalent part if replacement becomes necessary. Do not use a replacement part of lesser quality or substitute design. Torque values must be used as specified during reassembly to assure proper retention of these parts.

CONTENTS

GENERAL DESCRIPTION 3B-2
DIAGNOSIS 3B-3
ON-VEHICLE SERVICE 3B-4
LUBRICATION 3B-4
TIE ROD END 3B-6
MANUAL RACK AND PINION ASSEMBLY (STEERING GEAR CASE) 3B-7
RACK BOOT/TIE ROD 3B-10
STEERING RACK PLUNGER 3B-12
STEERING PINION 3B-14
STEERING RACK 3B-15
PINION BEARING 3B-17
RACK BUSHING 3B-18
REQUIRED SERVICE MATERIAL 3B-19
SPECIAL TOOL 3B-20

GENERAL DESCRIPTION

The rack and pinion steering system consists of two components, the rack (2) and the pinion (1). When the steering wheel (3) is turned, the motion is transmitted to the steering shaft joint (4) and then to the pinion.
Since the pinion teeth mesh with teeth on rack, the motion is further transferred to the rack and changed to linear motion. The force is then transmitted through the tie rods (5) to the steering knuckles (6) which turn wheels.

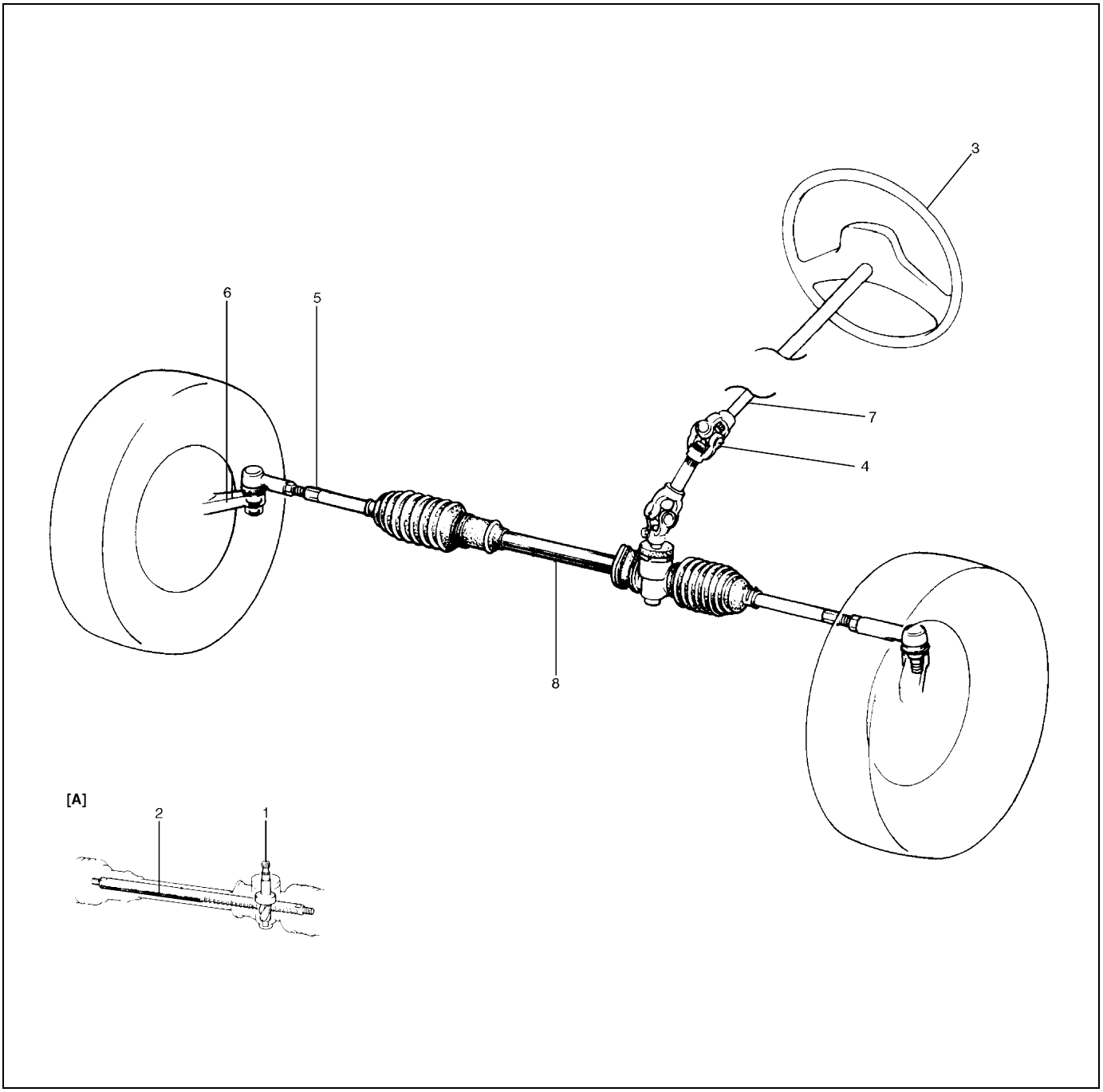

7.	Steering shaft
8.	Steering gear case
[A]:	Rack and Pinion

DIAGNOSIS

DIAGNOSIS TABLE

Refer to Section 3.

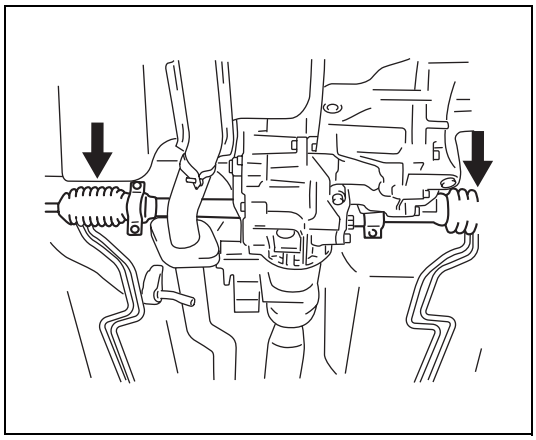

STEERING RACK BOOT CHECK

Hoist vehicle.
Inspect each boot for tear. A torn boot allows entry of dust and water which can cause wear to steering rack and pinion to produce noise as well as rust to result in malfunction of steering system.
If even a small tear is noted, replace with new one.

Boots should be visually inspected for any damage and tear during every periodical inspection at specified intervals and whenever vehicle is hoisted for any other purpose.

TIE ROD END BOOTS CHECK

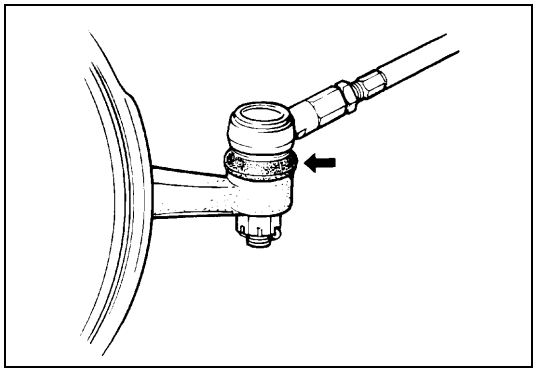

Inspect each boot for tear. If even a small tear is noted, replace with new one.

STEERING SHAFT JOINT CHECK

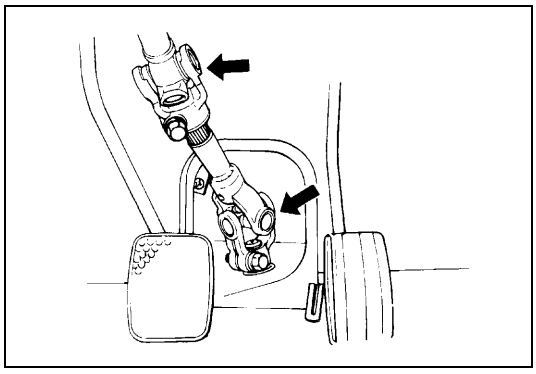

Check shaft joint for wear, breakage and other damage and replace if any defect exists.

THE ROD END CHECK

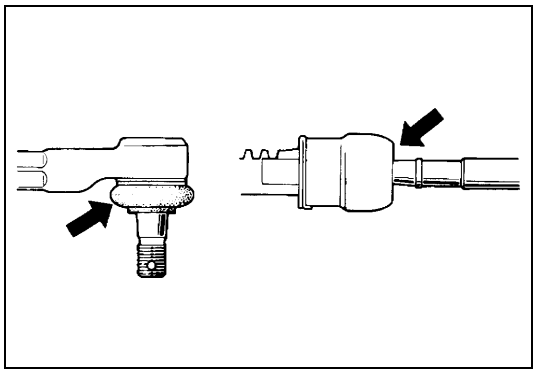

1) Inspect for play in ball joint.
2) Inspect for play in rack end ball joint.
   In either case, if found defective, replace.

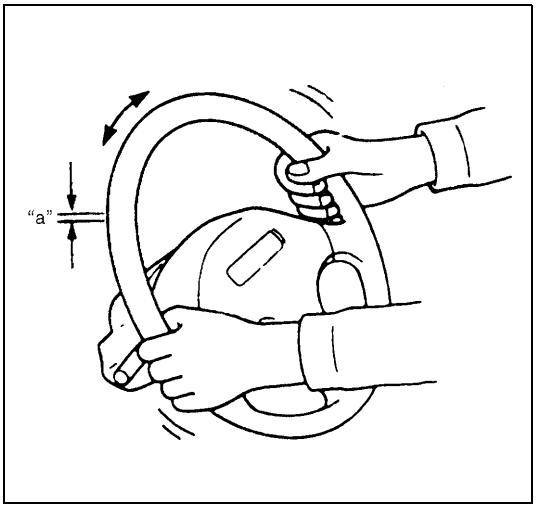

STEERING WHEEL CHECK

Check steering wheel for play and rattle, holding vehicle in straight forward condition on the ground.

Steering wheel play
"a" : 0 – 30 mm (0 – 1.1 in.)

If steering wheel play is not within specification, inspect as follows and replace if found defective.

- Tie-rod end ball stud for wear (ball stud should move when more than 2 kg-cm torque is applied.)
- Lower ball joint for wear
- Steering shaft joint for wear
- Steering pinion or rack gear for wear or breakage
- Each part for looseness

ON-VEHICLE SERVICE

LUBRICATION

When inner parts of the steering gear case were disassembled, they should be washed clean before reassembly. It is recommended to use the grease as given below where grease application is indicated in the text.

✱ SUZUKI SUPER GREASE (E) 99000-25050, or Lithium grease (applicable for –40°C ~ 130°C or 104°F ~ 266°F)

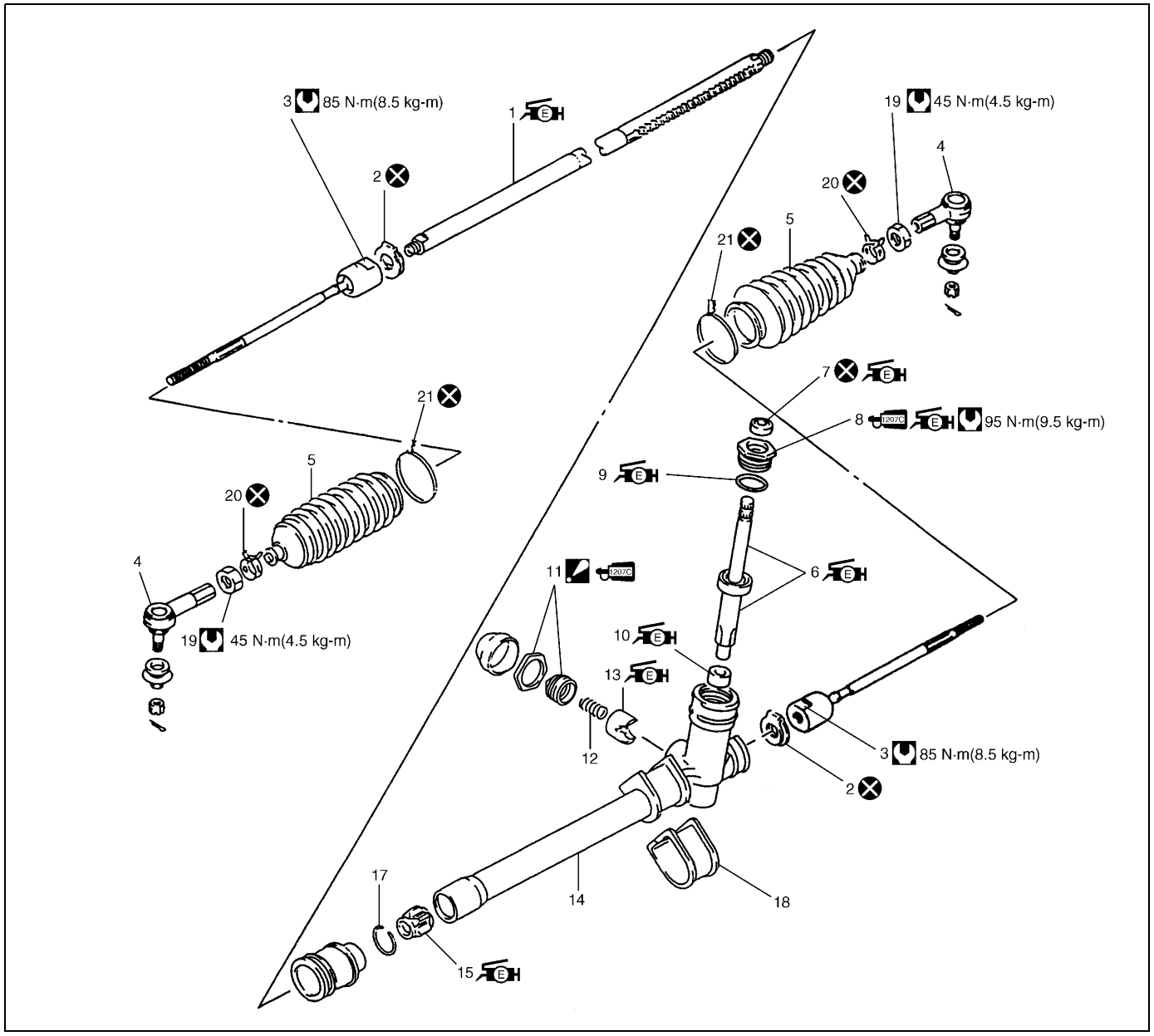

EH	1. Steering rack : Apply grease 9900-25050 to teeth surface of rack.		12. Rack plunger spring
	2. Tie rod lock washer	EH	13. Steering rack plunger : Apply grease 99000-25050 to sliding part of plunger.
	3. Steering tie rod		14. Steering rack housing and gear case
	4. Tie rod end	EH	15. Steering rack bushing : Apply grease 99000-25050 to lightly to entire surface of bushing.
	5. Boot		17. Snap ring
EH	6. Steering pinion : Apply grease 99000-25050 to pinion shaft.		18. Steering pinion side mount
EH	7. Steering gear case oil seal : Apply grease 99000-25050 to oil seal lip.		19. Tie rod end lock nut
1207C EH	8. Pinion bearing plug : Apply grease 99000-25050 to inside of pinion bearing plug. : Apply sealant No. 1207C 99000-31150 to plug thread.		20. Rack boot clip
EH	9. O-ring : Apply grease 99000-25050 to O-ring		21. Wire
EH	10. Steering pinion needle bearing : Apply grease 99000-25050 to rollers of bearing.		Tightening torque
1207C	11. Rack damper screw : Tighten rack damper screw so that rotation torque becomes as specified. : Apply sealant No. 1207C 99000-31150 to all around thread part of rack damper screw.		Do not reuse.

TIE ROD END

REMOVAL

1) Hoist vehicle and remove wheel.

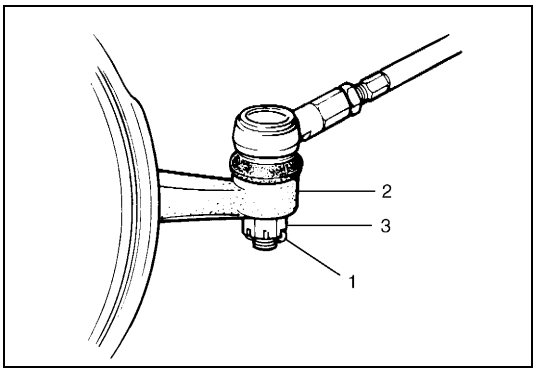

2) Remove split pin (1) and tie rod end castle nut (3) from steering knuckle (2).

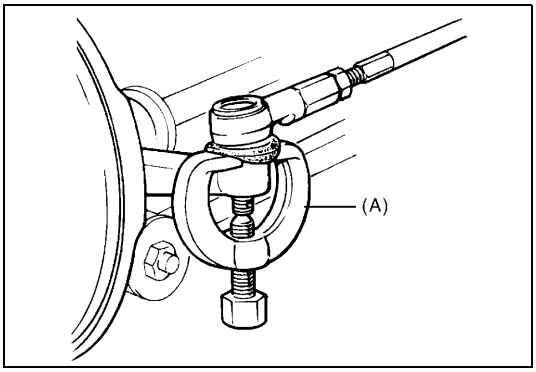

3) Disconnect tie rod end from knuckle, using special tool.

Special tool
(A) : 09913-65210

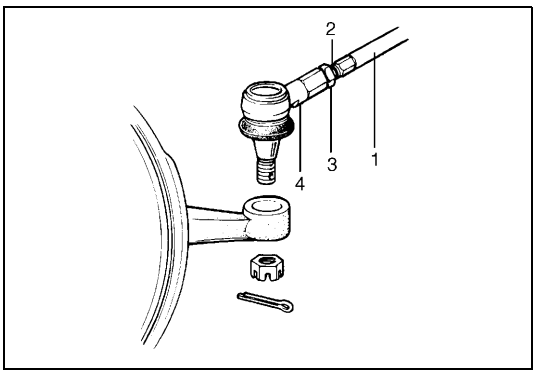

4) For ease of adjustment after installation, make marking (2) of tie rod end lock nut (3) position on tie rod end thread. Then loosen lock nut and remove tie rod end (4) from tie rod (1).

INSTALLATION

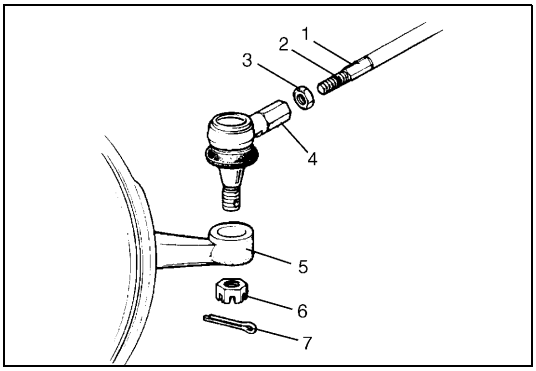

1) Install tie rod end lock nut (3) and tie rod end (4) to tie rod (1). Align lock nut with mar (2) on tie rod thread.

5.	Knuckle
6.	Castle nut
7.	Split pin

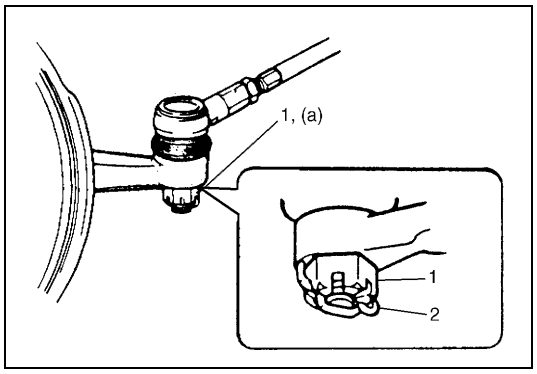

2) Connect tie rod end to knuckle. Tighten castle nut (1) until holes for split pin (2) are aligned, but only within specified torque.

Tightening torque
Castle nut (a) : 43 N·m (4.3 kg-m, 31.5 lb-ft)

3) Bend new split pin as shown.

4) Tighten wheel nuts to specified torque and lower hoist.

Tightening torque
Wheel nut : 85 N·m (8.5 kg-m, 61.5 lb-ft)

5) Inspect for proper toe (Refer to Section 3A).

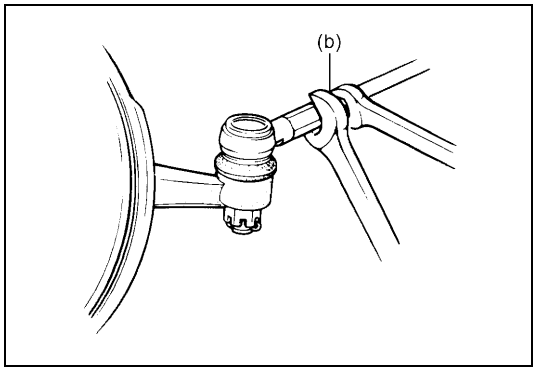

6) After confirming proper toe, tighten tie rod end lock nut to specified torque.

Tightening torque
Tie rod end lock nut (b) : 45 N·m (4.5 kg-m, 32.5 lb-ft)

MANUAL RACK AND PINION ASSEMBLY (STEERING GEAR CASE)

REMOVAL

CAUTION:
Be sure to set front wheels in straight direction and remove ignition key from key cylinder before these steps, otherwise contact coil of air bag system may get damaged.

1) Slide driver's seat as far back as possible.
2) Pull off front part of floor mat on driver's side and remove steering shaft joint cover.

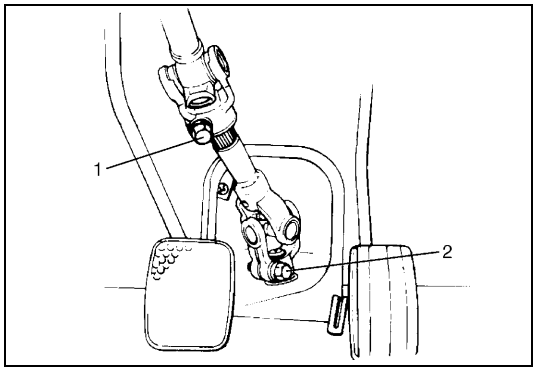

3) For ease of installation, loosen steering shaft upper joint bolt (1) but don't remove.
4) Remove steering shaft lower joint bolt (2) and disconnect lower joint from pinion.

5) Hoist vehicle and remove both wheels.

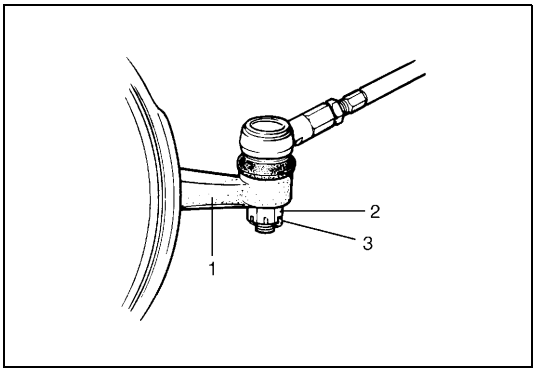

6) Remove split pins (3) and tie rod castle nuts (2) from both knuckles (1).

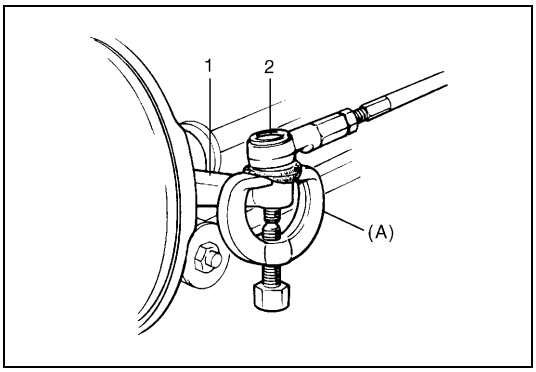

7) Disconnect both tie rod ends (2) from knuckles (1), using special tool.

Special tool
(A) : 09913-65210

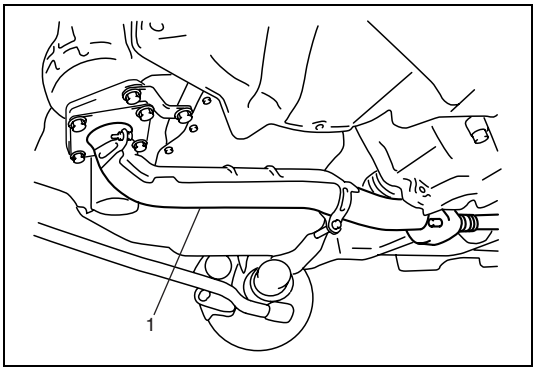

8) Remove exhaust No.1 pipe (1).
9) For ease of adjustment after installation, make marking of tie rod end lock nut position on tie rod end thread. Then loosen lock nut and remove tie rod end.

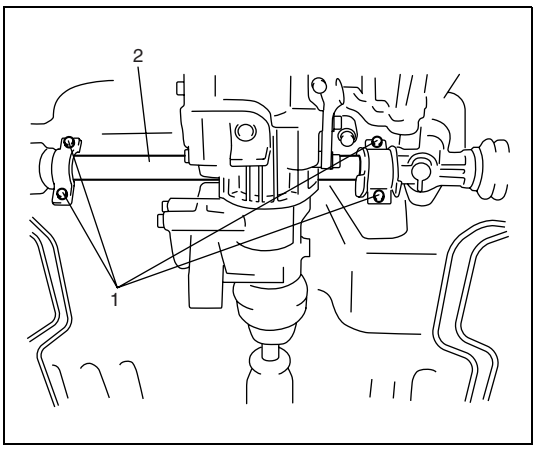

10) Remove steering gear case mount bolts (1) and gear case brackets, then remove gear case (2).

NOTE:

For right-hand steering 4WD vehicle, before removing steering gear case, remove transfer assembly referring to Section 7D if necessary.

INSTALLATION

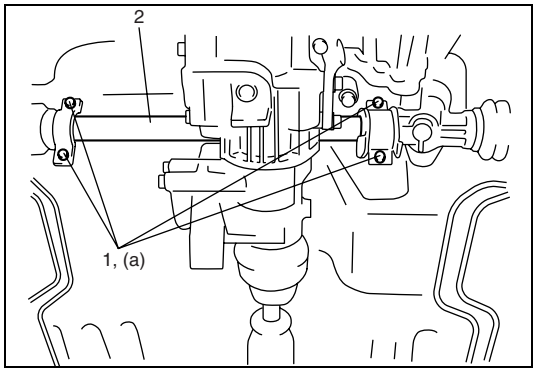

1) Mount steering gear case (2) to body and tighten gear case mount bolts (1) to specified torque.

Tightening torque
Gear case mount bolt (a) : 25 N·m (2.5 kg-m, 18.0 lb-ft)

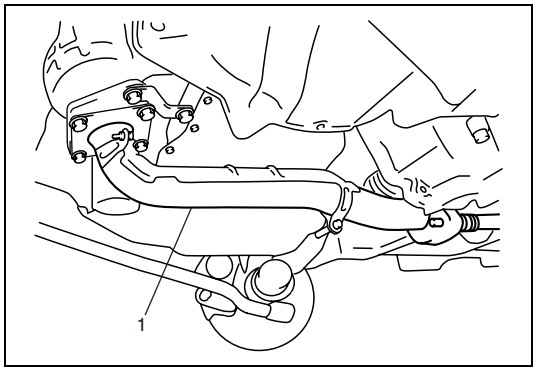

2) Install exhaust No.1 pipe (3).

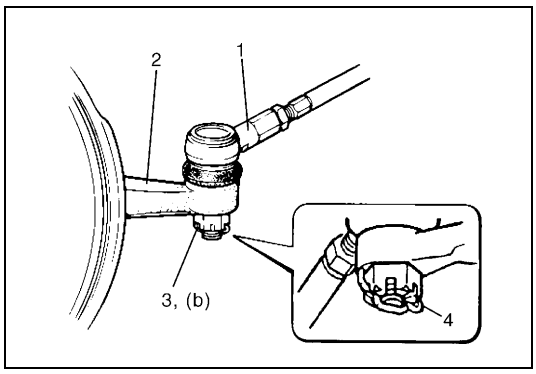

3) Install both tie rod ends (1) to knuckles (2). Tighten each castle nut (3) until holes for split pin (4) align but within specified torque and then bend new split pin as shown.

Tightening torque
Castle nut (b) : 43 N·m (4.3 kg-m, 31.5 lb-ft)

4) Be sure that steering wheel and both brake discs are all straight ahead driving state and then insert steering lower joint into steering pinion shaft.

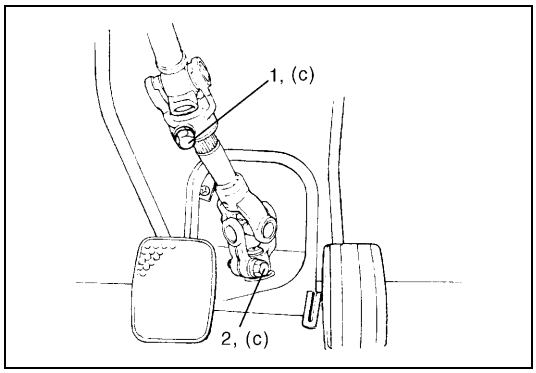

5) Tighten steering shaft joint bolts to specified torque (Lower side (2) first and then upper side (1)).

Tightening torque
Steering shaft joint bolt (c) : 25 N·m (2.5 kg-m, 18.0 lb-ft)

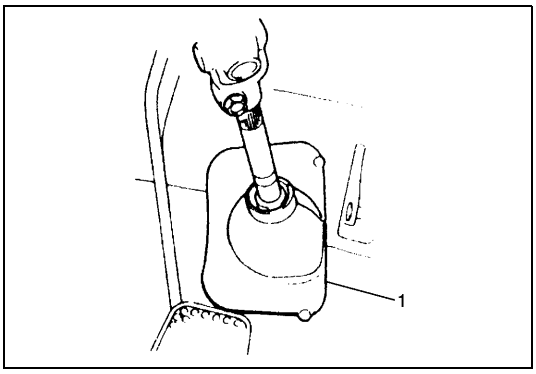

6) Reinstall cover (1) removed previously to steering shaft joint.
7) Put back floor mat as it was.
8) Install both wheels and tighten wheel nuts to specified torque.

Tightening torque
Wheel nut : 85 N·m (8.5 kg-m, 61.5 lb-ft)

9) Lower hoist.
10) Check toe setting. Adjust as required (refer to Section 3A).

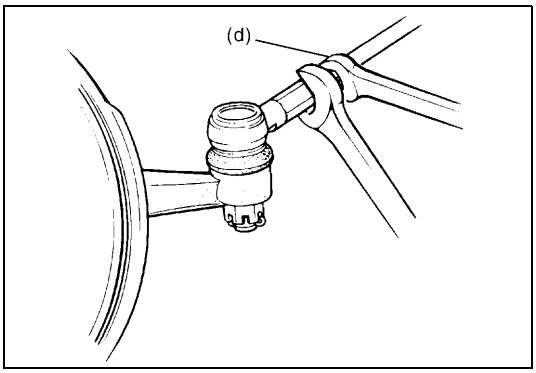

11) Tighten both tie rod end lock nuts to specified torque.

Tightening torque
Tie rod end lock nut (d) : 45 N·m (4.5 kg-m, 32.5 lb-ft)

RACK BOOT/TIE ROD

REMOVAL

1) Remove steering gear case by performing “MANUAL RACK AND PINION ASSEMBLY REMOVAL” of this section.

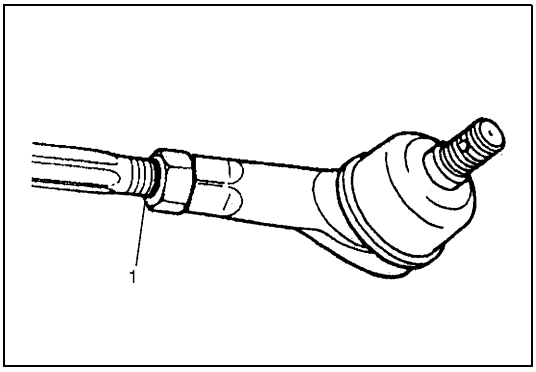

2) For ease of adjustment after installation, make marking (1) of tie rod end lock nut position of tie rod end thread.
3) Loosen tie rod end lock nut and remove tie rod end.

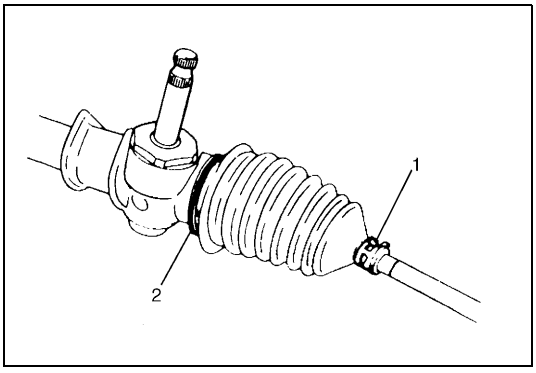

4) Remove boot wire (2) and clip (1).
5) Remove boot from tie rod.

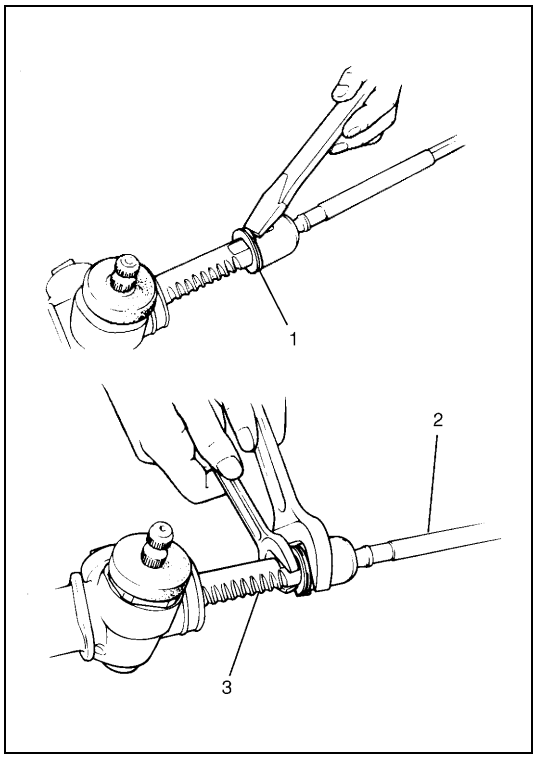

6) Unbend bent part of tie rod lock washer (1) and remove tie rod (2) from rack (3).

INSTALLATION

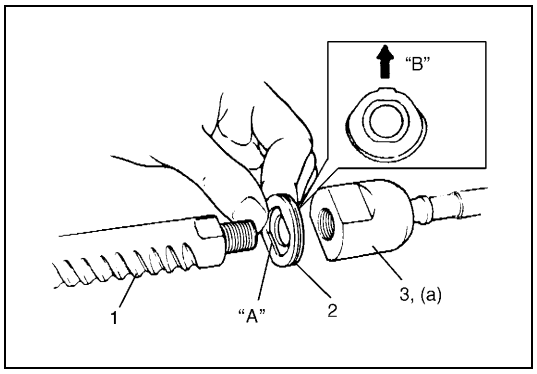

1) Install new tie rod lock washer (2) and tie rod (3) to rack (1). Align straight part "A" of washer with flat part "B" of rack.

NOTE:

For correct installation of tie rod lock washer, referring to the figure.

"B": Upper

2) Tighten tie rod inside ball nut to specified torque.

Tightening torque
Tie rod inside ball nut (a) : 85 N·m (8.5 kg-m, 61.5 lb-ft)

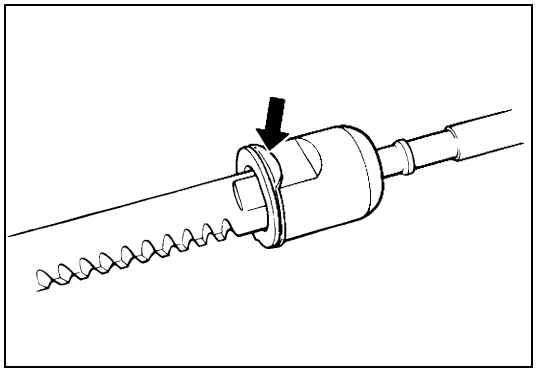

3) Bend new lock washer to tie rod side as shown.

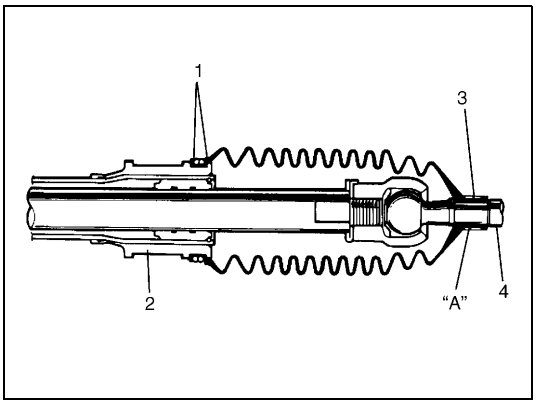

4) Position boot properly in grooves of gear case and tie rod (4) and clamp it with wire (1) and clip (3).
   Wire should be new and should go around twice and be tightened with its both ends twisted together. The twisted ends should be bent in the circumferential direction.
   After this, check to ensure that boot is free from twist and dent.

2. Rack side mount
"A": Apply grease here.

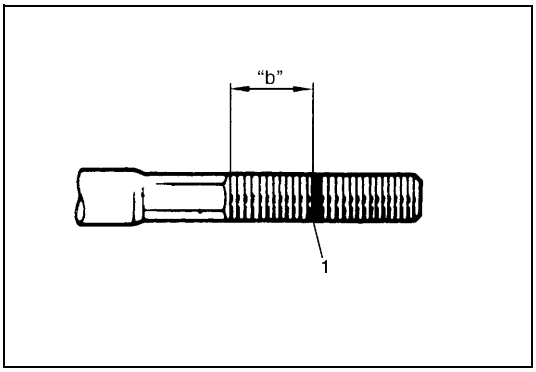

5) Install tie rod end lock nut and tie rod end to tie rod.
   Position lock nut to marking (1) made in removal.

NOTE:

When tie rod end was replaced, measure length "b" on removed tie rod end and use it on new replacement tie rod end so as to position lock nut properly.

6) Install steering gear case referring to "MANUAL RACK AND PINION ASSEMBLY INSTALLATION" of this section.

STEERING RACK PLUNGER

REMOVAL

1) Remove steering gear case by performing "MANUAL RACK AND PINION ASSEMBLY REMOVAL" of this section.
2) Remove rack boots and tie rods by performing "RACK BOOT/TIE ROD REMOVAL" of this section.

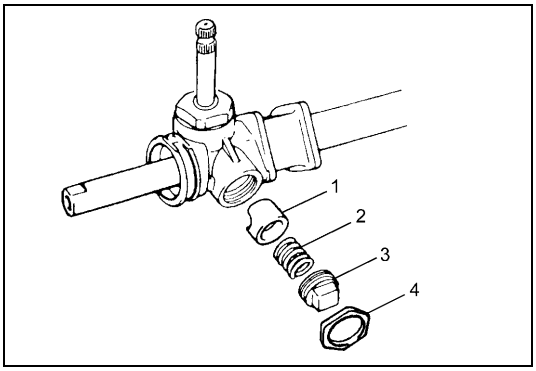

3) Remove rack damper screw lock nut (4), rack damper screw (3), rack damper spring (2) and rack plunger (1).

INSPECTION

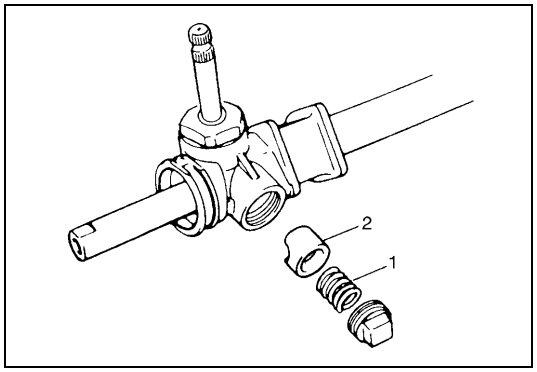

- Inspect rack plunger (2) for wear or damage.
- Inspect rack plunger spring (1) for deterioration.
  In either case, if found defective, replace.

INSTALLATION

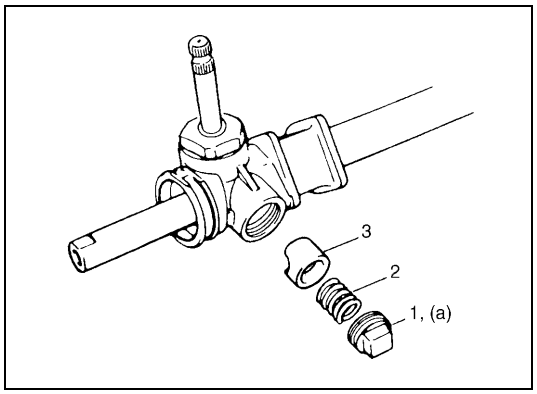

1) Apply grease lightly to sliding part of plunger against rack.

   Grease : 99000-25050

2) Install rack plunger (3), rack plunger spring (2), rack damper screw (1) to steering case in direction shown. Tighten rack damper screw to specified torque.

   Tightening torque
   Rack damper screw (a) : 12N·m (1.2 kg-m, 8.5 lb-ft)

   "A" : Sealant 99000-31150

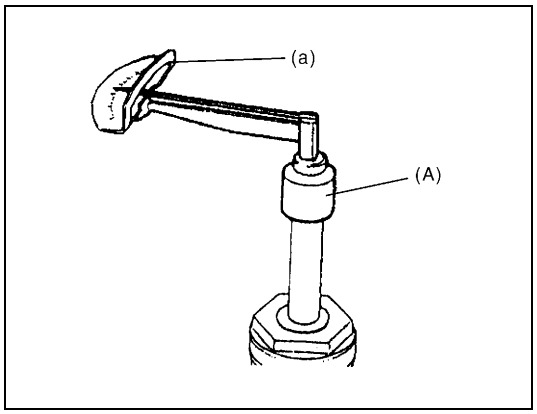

3) After tightening rack damper screw to specified torque, turn it back by 30° ~ 50° and check for rotation torque of pinion. If it is not as specified below, adjust so that it will be within specified torque range.

   Special tool
   (A) : 09944-18211

   Rotation Torquer of pinion
   (a) : 0.4 – 1.1 N·m (0.04 – 0.11 kg-m, 0.29 – 0.79 lb-ft)

Also, check if rack as a whole moves smoothly.

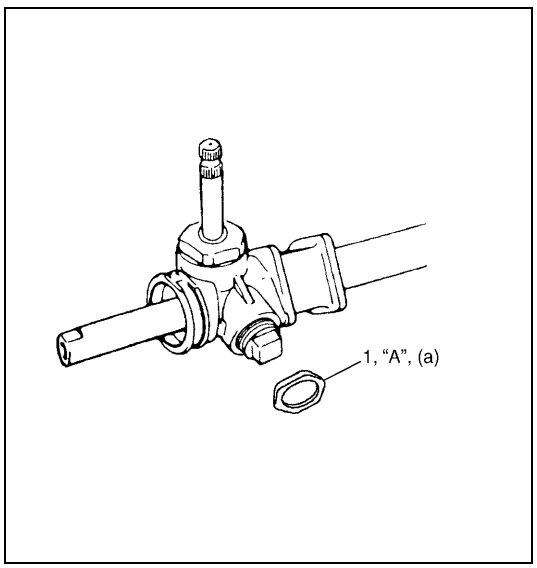

4) Apply sealant to thread part of rack damper screw lock nut (1) and tighten it to specified torque by not turning damper screw position adjusted in step 4).

   "A" : Sealant 99000-31150

   Tightening torque
   Rack damper screw lock nut
   (a) : 40 N·m (4.0 kg-m, 29.0 lb-ft)

5) After adjustment, put rack damper screw cap as deeply as possible.
6) Install rack boots and tie rods refer to "RACK BOOT/TIE ROD INSTALLATION" of this section.
7) Install steering gear case refer to "MANUAL RACK AND PINION ASSEMBLY" of this section.

STEERING PINION

REMOVAL

1) Remove rack plunger as shown in STEERING RACK PLUNGER.

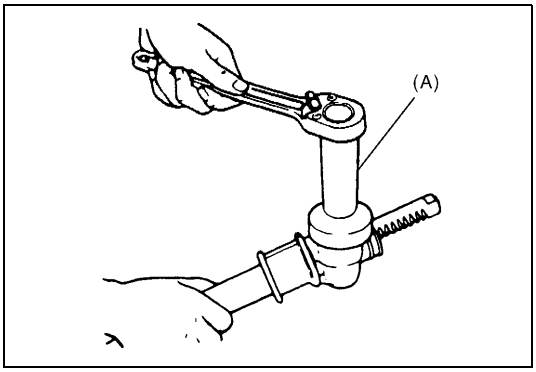

2) Remove bearing plug with special tool.

Special tool
(A) : 09944-26011

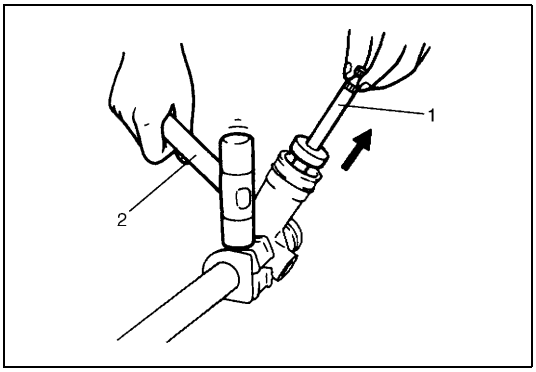

3) Tap on position as shown with plastic hammer (2) to separate pinion assembly (1) from housing, and remove pinion assembly.

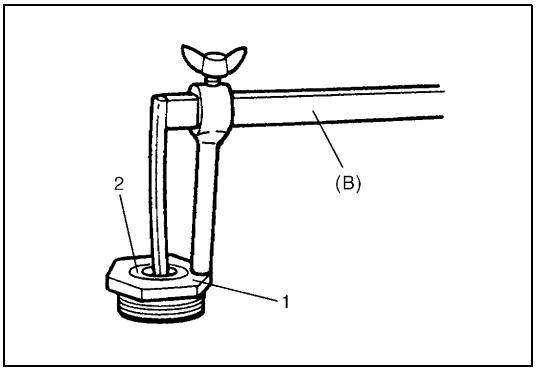

4) Remove oil seal (2) with special tool from pinion bearing plug (1).

Special tool
(B) : 09913-50121

INSPECTION

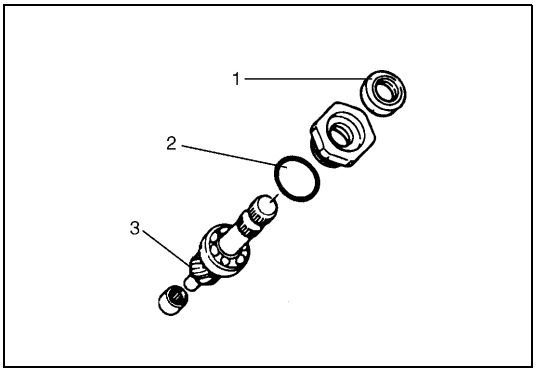

- Inspect pinion teeth surface (3) for wear or damage.
- Inspect oil seal (1) for damage.
- Replace any part found defective.
- Check rotation condition of bearing and inspect for wear. If found defective, replace.

2. Case seal

INSTALLATION

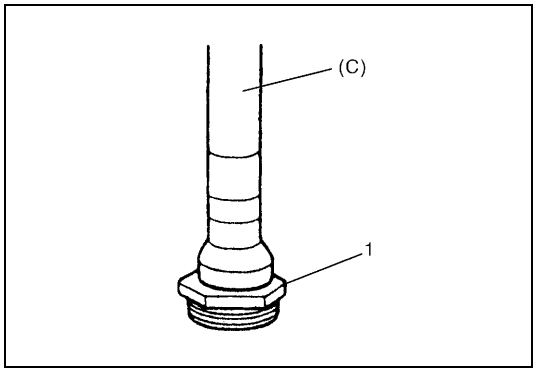

1) Install new oil seal with special tool to pinion bearing plug (1).

Special tool
(C) : 09925-98210

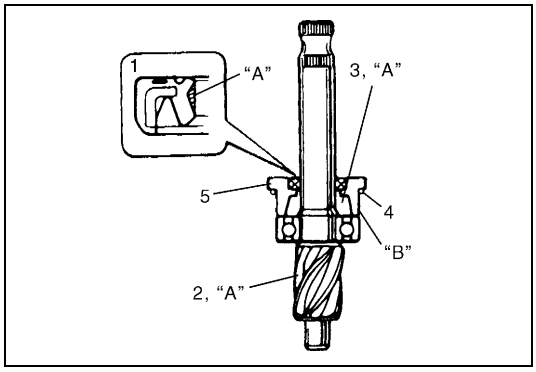

2) Apply grease to all around pinion teeth (2), pinion needle bearing, gear case O-ring (4) and gear case oil seal lip (1). Fill inside of pinion bearing plug (3) with grease.

"A" : Grease 99000-25050

3) Install pinion assembly and after applying sealant to pinion bearing plug (5) thread as shown.

"B" : Sealant 99000-31150

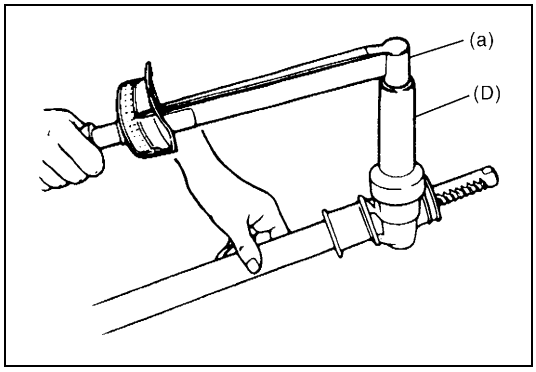

4) Tighten pinion bearing plug to specified torque.

Tightening torque
Pinion bearing plug (a) : 95 N·m (9.5 kg-m, 69.0 lb-ft)

Special tool
(D) : 09944-26011

5) Install rack plunger in STEERING RACK PLUNGER.

STEERING RACK

REMOVAL

1) Remove steering gear case.

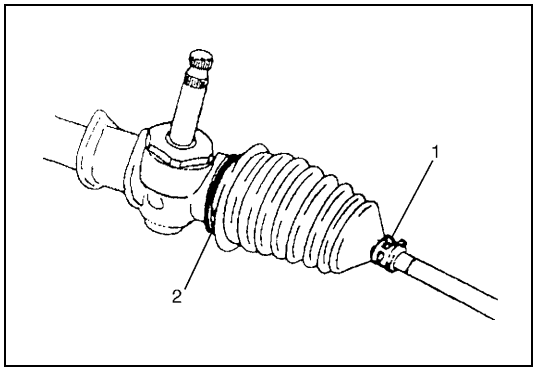

2) Remove boot wires (2) and clips (1).
3) Move both boots toward tie rod end.

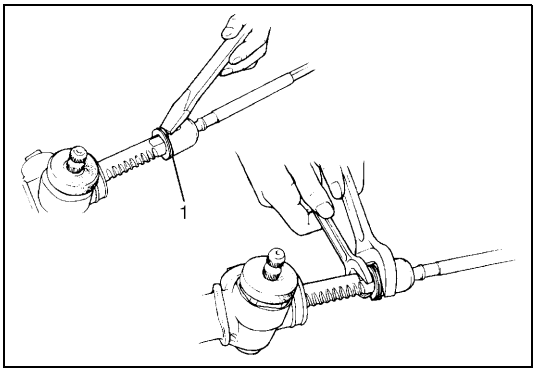

4) Unbend bend part of tie rod lock washers (1) and remove tie rods from right and left sides of steering rack.
5) Mark left and right tie rods accordingly.
6) Remove rack plunger and pinion assembly from gear case by performing Steps 1) – 3) in STEERING PINION REMOVAL of this section.

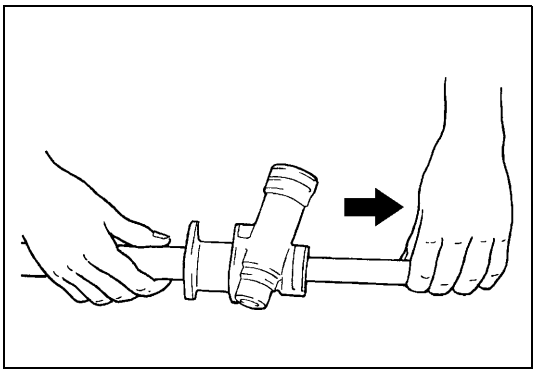

7) Remove rack from gear case. Direction for rack removal is as shown.

CAUTION:
Inside of steering rack bushing is coated with special coating. As it is damageable, be very careful not to cause damage to it when removing rack from steering gear case.

INSPECTION

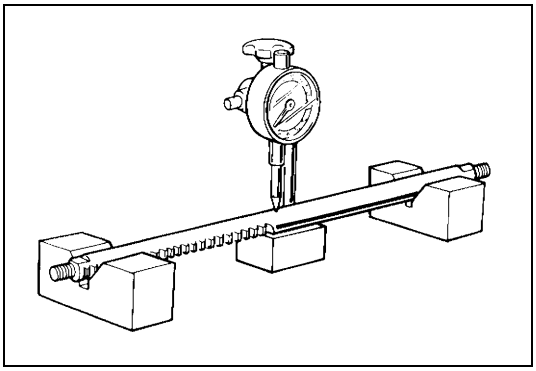

Inspect for deflection, teeth wear, or damage, back surface wear or damage.
If deflection exceeds limit, replace rack.

Limit of rack deflection
: 0.4 mm (0.016 in.)

INSTALLATION

1) Apply grease to entire teeth surface of rack and its periphery.

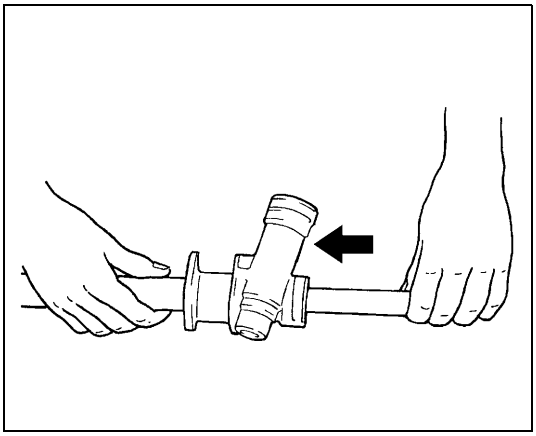

2) Slide rack into steering gear case in the direction as shown.

CAUTION:
Inside of steering rack bushing is coated with special coating. As it is damageable, be very careful not to cause damage to it when inserting rack into steering gear case.

3) Install pinion assembly to gear case by performing Steps 2) – 4) in STEERING PINION INSTALLATION of this section.4)
4) Perform Step 1) – 4) in STEERING RACK PLUNGER INSTALLATION of this section.

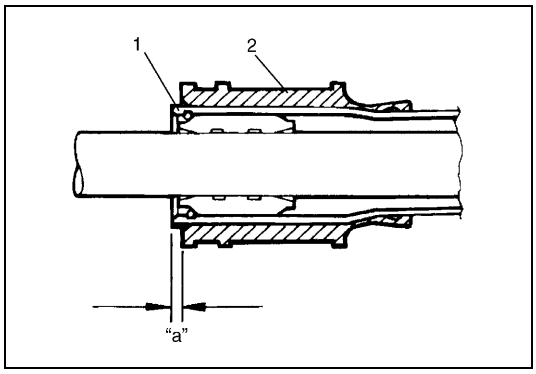

5) Before installing boot to steering rack housing (1), make sure that rack side mount (2) is positioned as shown. Install tie rods to rack by performing Steps 1) – 6) in RACK BOOT/TIE ROD INSTALLATION of this section.

Rack side mount installing position
"a" : 5.1 mm (0.2 in.)

PINION BEARING

REMOVAL

1) Remove rack from steering gear case, referring to STEERING RACK REMOVAL of this section.

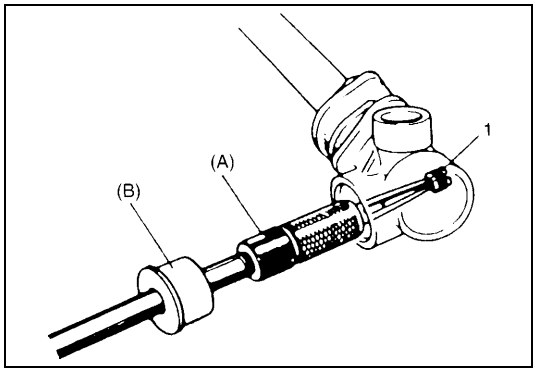

2) Remove pinion bearing (1) from gear case with special tools as shown.

Special tool
(A) : 09921-20200
(B) : 09930-30102

INSTALLATION

1) Apply grease to rollers of pinion bearing.

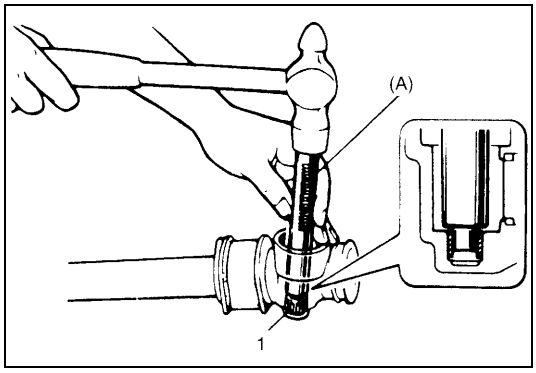

2) Press-fit pinion bearing (1) into gear case with special tool as shown.
After press-fitting, make sure that bearing rollers are installed properly.

Special tool
(A) : 09943-88211

3) Follow Steps 1) – 5) in STEERING RACK INSTALLATION of this section to complete installation.

RACK BUSHING

REMOVAL

NOTE:

When removing rack bushing, be careful not to pull out bushing by holding gear case in a vise. Or housing (pipe) may come off gear case. For this work, be sure to use the below specified special tool.

1) Remove rack from steering gear case, referring to STEERING RACK REMOVAL of this section.

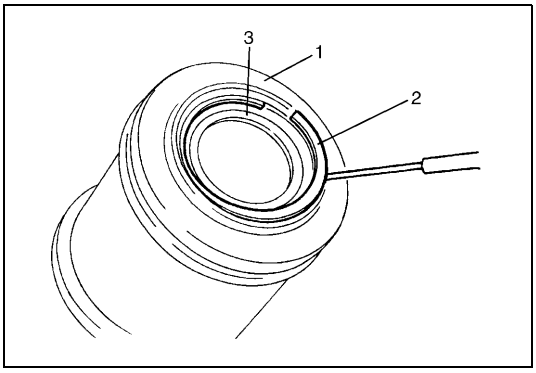

2) Remove snap ring (2).

1.	Rack housing
3.	Bushing

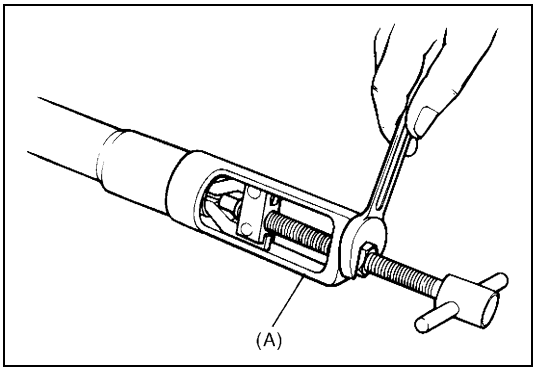

3) Pull out bushing from rack housing with special tool as shown.

Special tool
(A) : 09944-48210

INSPECTION

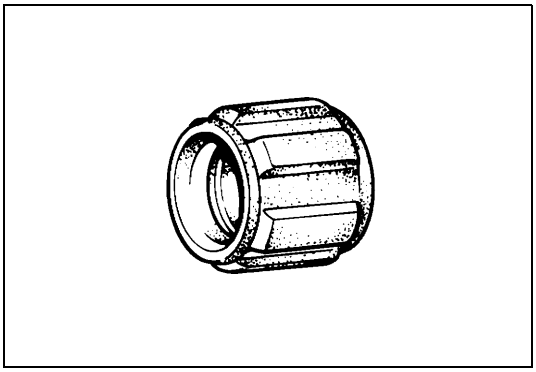

Inspect rack bushing for wear or damage.
If found defective, replace.

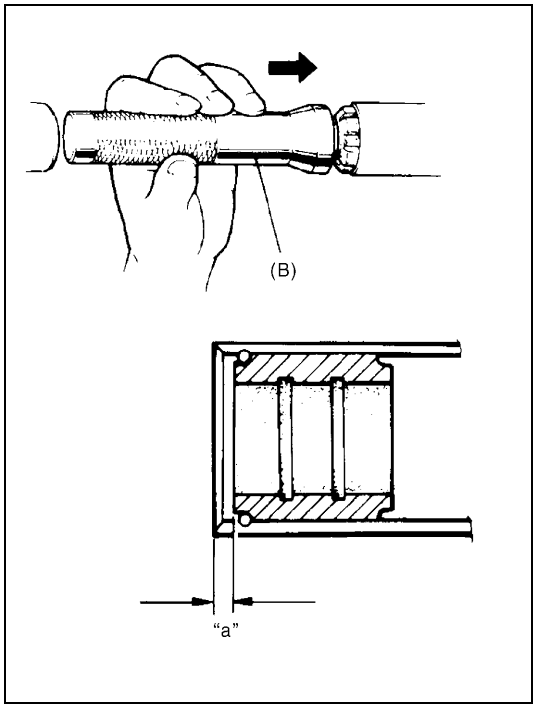

INSTALLATION

1) Apply grease lightly to entire inner surface of bushing.
2) Press-fit bushing as far into rack housing as shown by using special tool.

CAUTION:
Inside of bushing is coated with special coating. As it is damageable, be sure to use special tool and special care not to cause damage to inside of bushing when press-fitting it.

Special tool
(B) : 09943-78210

Bush installing position
"a" : 4.5 – 5.5 mm (0.18 – 0.22 in.)

3) Install snap ring.
4) Follow Steps 1) – 5) in STEERING RACK INSTALLATION of this section to complete installation.

REQUIRED SERVICE MATERIAL

Material	Recommended SUZUKI product (Part Number)	Use
Lithium Grease (Should be applicable for –40C° ~ 130°C)	SUZUKI SUPER GREASE (E) (99000-25050)	• Sliding part of rack against steering housing (All around rack plunger, rack bushing and rack) • Sliding part against steering pinion (Oil seal lip, needle bearing) • Steering rack and pinion gear teeth • Filled into pinion bearing cap • Contacting parts of tie-rod and rack side boots • Rack end ball joint
Sealant	SUZUKI BOND NO. 1207C (99000-31150)	• Rack damper screw nut • Pinion bearing plug thread

SPECIAL TOOL

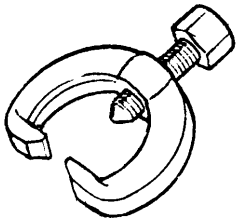 09913-65210 Tie-rod end remover	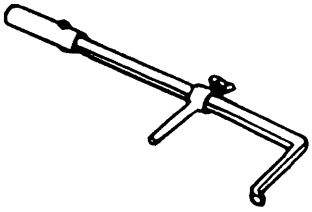 09913-50121 Oil seal remover	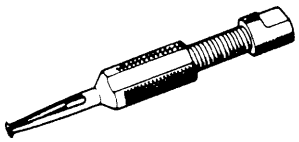 09921-20200 Pinion bearing remover	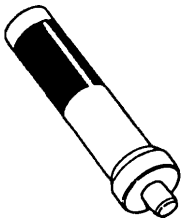 09925-98210 Bearing installer
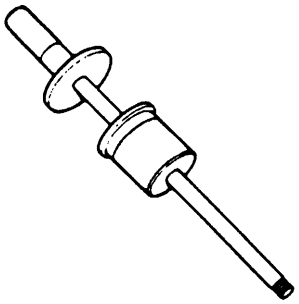 09930-30102 Sliding shaft	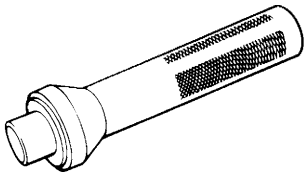 09943-78210 Rack bush installer	 09944-18211 Pinion torque checking socket	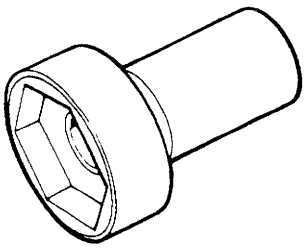 09944-26011 43 mm Socket (Pinion bearing plug remover)
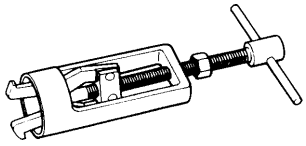 09944-48210 Rack bush remover			

SECTION 3B1

ELECTRICAL POWER STEERING (P/S) SYSTEM

WARNING:

For vehicles equipped with Supplemental Restraint (Air Bag) System :

- **Service on and around the air bag system components or wiring must be performed only by an authorized SUZUKI dealer. Refer to "Air Bag System Components and Wiring Location View" under "General Description" in air bag system section in order to confirm whether you are performing service on or near the air bag system components or wiring. Please observe all WARNINGS and "Service Precautions" under "On-Vehicle Service" in air bag system section before performing service on or around the air bag system components or wiring. Failure to follow WARNINGS could result in unintentional activation of the system or could render the system inoperative. Either of these two conditions may result in severe injury.**
- **Technical service work must be started at least 90 seconds after the ignition switch is turned to the "LOCK" position and the negative cable is disconnected from the battery. Otherwise, the system may be activated by reserve energy in the Sensing and Diagnostic Module (SDM).**

CONTENTS

GENERAL DESCRIPTION 3B1-2
- SYSTEM COMPONENTS 3B1-2
- WIRING DIAGRAM 3B1-3

DIAGNOSIS 3B1-4
- ON-BOARD DIAGNOSTIC SYSTEM 3B1-4
- PRECAUTIONS IN DIAGNOSING TROUBLES 3B1-4
- SYSTEM CHECK FLOW TABLE 3B1-5
- MALFUNCTION INDICATOR LAMP ("EPS" WARNING LAMP) CHECK 3B1-7
- DTC CHECK 3B1-8
- DTC CLEARANCE 3B1-9
- SERIAL DATA LINK CIRCUIT CHECK 3B1-10
- DTC TABLE 3B1-11
- TABLE A - MALFUNCTION INDICATOR LAMP DOES NOT COME ON AT IGNITION SWITCH ON BUT LEAVING ENGINE OFF 3B1-13
- TABLE B - MALFUNCTION INDICATOR LAMP FLASHES AT IGNITION SWITCH ON 3B1-15
- TABLE C - MALFUNCTION INDICATOR LAMP DOES NOT FLASH, JUST REMAINS ON OR JUST REMAINS OFF EVEN WITH DIAGNOSIS SWITCH TERMINAL GROUNDED 3B1-15
- DTC C1111 (DTC No.11) TORQUE SENSOR MAIN CIRCUIT FAILURE 3B1-16
- DTC C1113 (DTC No.13) TORQUE SENSOR MAIN AND SUB CIRCUIT FAILURE 3B1-16
- DTC C1115 (DTC No.15) TORQUE SENSOR SUB CIRCUIT FAILURE 3B1-16
- DTC C1114 (DTC No.14) TORQUE SENSOR 5V POWER SUPPLY CIRCUIT FAILURE 3B1-17
- DTC C1116 (DTC No.16) TORQUE SENSOR 8V POWER SUPPLY CIRCUIT FAILURE 3B1-18
- DTC C1121/C1123/C1124 (DTC No.21/23/24) VSS CIRCUIT FAILURE 3B1-19
- DTC C1122 (DTC No.22) ENGINE SPEED SIGNAL CIRCUIT FAILURE 3B1-20
- DTC C1141/C1142/C1143/C1144/C1145 (DTC No.41/42/43/44/45) MOTOR CIRCUIT FAILURE 3B1-21
- DTC C1151 (DTC No.51) CLUTCH CIRCUIT FAILURE 3B1-22
- DTC C1153(DTC No.53) P/S CONTROL MODULE POWER SUPPLY CIRCUIT FAILURE 3B1-24
- DTC C1152/C1154/C1155 (DTC No.52/54/55) P/S CONTROL MODULE FAILURE 3B1-24
- TROUBLE DIAGNOSIS (FOR TROUBLE NOT INDICATED BY ON BOARD DIAGNOSTIC SYSTEM) 3B1-25
- INSPECTION OF P/S CONTROL MODULE AND ITS CIRCUITS 3B1-26
- STEERING WHEEL PLAY INSPECTION 3B1-28

STEERING FORCE INSPECTION 3B1-28
ON-VEHICLE SERVICE 3B1-29
P/S CONTROL MODULE 3B1-29
TORQUE SENSOR 3B1-29
MOTOR AND CLUTCH 3B1-30
STEERING COLUMN ASSEMBLY 3B1-31
SPECIAL TOOL 3B1-31

GENERAL DESCRIPTION

SYSTEM COMPONENTS

This power steering (P/S) system consists of a P/S control module, a torque sensor, a motor and clutch installed to the steering column.
In this system, the P/S control module determines the level and direction of the assist force for the steering wheel according to the signals from the torque sensor and the vehicle speed, runs the motor so as to assist operation of the steering wheel.

P/S control module diagnoses troubles which may occur in the area including the following components when the ignition switch is ON and the engine is running. When P/S control module detects malfunction, it stops the motor and clutch control.

- Torque sensor
- Vehicle speed sensor (VSS) circuit
- Engine speed signal circuit
- Motor
- Clutch
- P/S control module

NOTE:

The location of steering wheel/column and ECM to RH steering vehicle are opposite to those location to LH steering vehicle.

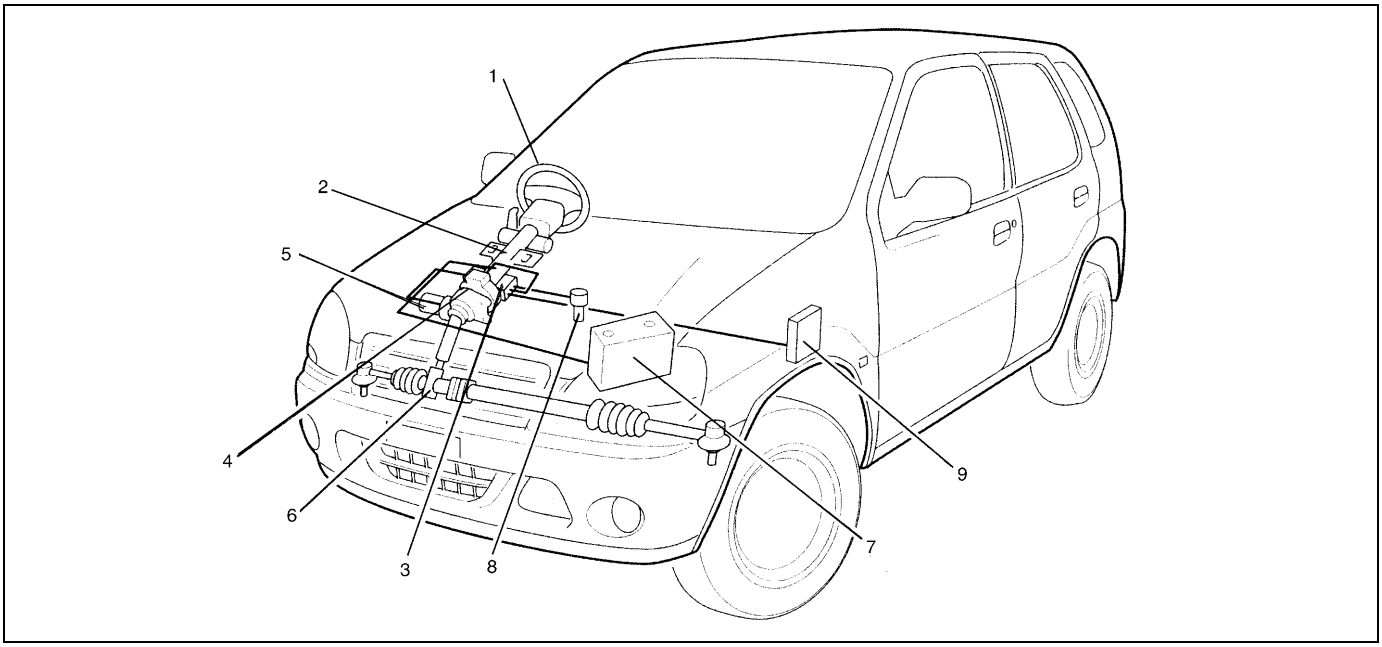

1. Steering wheel	4. Torque sensor	7. Battery
2. Steering column assembly	5. Motor and clutch	8. VSS
3. P/S control module	6. Steering gear box	9. ECM

WIRING DIAGRAM

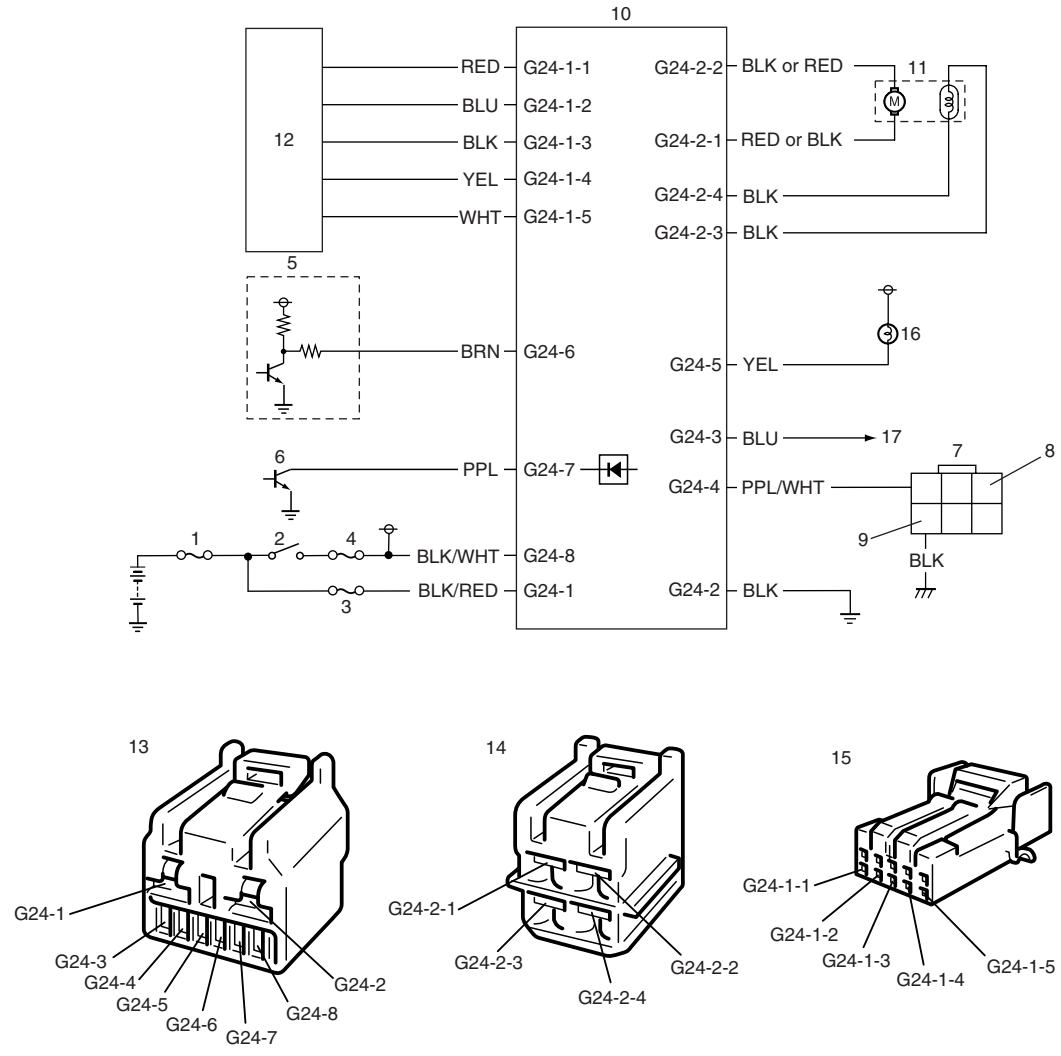

1. Main fuse	7. Monitor coupler (for A/T, ABS, P/S system)	13. Connector “G24”
2. Ignition switch	8. Diagnosis switch terminal (for P/S system)	14. Connector “G24-2”
3. “P/S” fuse (30A) in fuse box	9. Ground terminal	15. Connector “G24-1”
4. “IG METER” fuse (15A) in fuse box	10. P/S control module	16. “EPS” warning lamp
5. ECM	11. Motor and clutch	17. DLC
6. VSS	12. Torque sensor	

DIAGNOSIS

The P/S system in this vehicle is controlled by P/S control module. P/S control module has an on-board diagnostic system which detects a malfunction in this system.
When diagnosing troubles, be sure to have full understanding of the outline of “ON-BOARD DIAGNOSTIC SYSTEM” and each item in “PRECAUTION IN DIAGNOSING TROUBLE” and execute diagnosis according to “SYSTEM CHECK FLOW TABLE”.

ON-BOARD DIAGNOSTIC SYSTEM

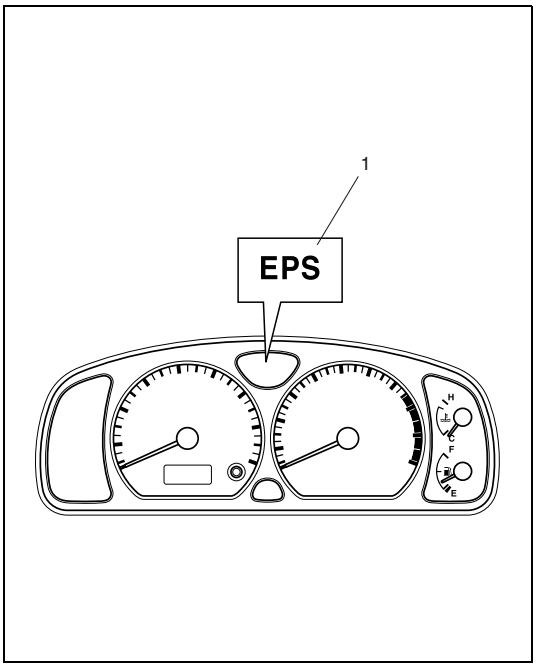

P/S control module performs on-board diagnosis (self-diagnosis) on the system and operates “EPS” warning lamp (1) (malfunction indicator lamp) as follows.

- Malfunction indicator lamp (“EPS” warning lamp) lights when the ignition switch is turned to ON position (but the engine at stop) regardless of the condition of P/S control system. This is only to check the malfunction indicator lamp (“EPS” warning lamp) bulb and its circuit.
- If the areas monitored by P/S control module is free from any trouble after the engine start (while engine is running), malfunction indicator lamp (“EPS” warning lamp) turns OFF.
- When P/S control module detects a trouble which has occurred in the areas it monitors, malfunction indicator lamp (“EPS” warning lamp) turns ON while the engine is running to warn the driver of such occurrence of trouble and at the same time it stores the exact trouble area in memory inside of P/S control module.

PRECAUTIONS IN DIAGNOSING TROUBLES

- Take a note of DTC indicated first.
- Be sure to read “PRECAUTIONS FOR ELECTRONIC CIRCUIT SERVICE” in Section 0A before inspection and observe what is written there.
- When two or more troubles have occurred, their DTCs are indicated 3 times each starting with the smallest code number and up.
- DTC C1122 (DTC No.22) (engine speed signal failure) is indicated when ignition switch is ON position and engine is not running but if indication changes to a normal one when engine is started, it means nothing abnormal.
- As DTC is stored in memory of P/S control module, be sure to clear memory after repair by performing the procedure described in “DTC CLEARANCE”.

SYSTEM CHECK FLOW TABLE

Step	Action	Yes	No
1	1) Record details of the problem (failure, complaint) and how it occurred as described by the customer. For this purpose, use of such a questionnaire from as shown below will facilitate collecting information to the point required for proper analysis and diagnosis. 2) Check if what the customer claimed in “CUSTOMER QUESTIONNAIRE” is actually found in the vehicle and if that symptom is found, whether it is identified as a failure. (This step should be shared with the customer if possible.) 3) Check malfunction indicator lamp (“EPS” warning lamp) operation referring to “MALFUNCTION INDICATOR LAMP (“EPS” LIGHT) CHECK”. 4) Check DTC referring to “DTC CHECK” in this section and record the DTC(s). 5) Clear DTC if any malfunction DTC exists referring to “DTC CLEARANCE” in this section, then recheck DTC. Is any malfunction DTC detected?	Go to Step 2.	Go to Step 3.
2	1) Inspect and repair referring to applicable “DTC TABLE” in this section. 2) Clear DTC referring to “DTC CLEARANCE” in this section. Does the trouble recur?	Go to Step 5.	Go to Step 4.
3	1) Test drive the vehicle and turn steering wheel fully to the right and left during test driving. See WARNING. Check if any trouble exists. 2) Inspect and repair basic parts referring to “DIAGNOSIS CHART” in SECTION 3. 3) If the trouble cannot be repaired in Step 3-2), inspect and repair referring to “TROUBLE DIAGNOSIS (FOR TROUBLE NOT INDICATED BY ON-BOARD DIAGNOSTIC SYSTEM)” in this section. Does the trouble recur?	Go to Step 5.	Go to Step 4.
4	1) Confirm that the problem symptom has gone and P/S system is free from any abnormal conditions. If what has been repaired is related to the malfunction DTC, clear the DTC once and perform test driving as in Step 3-1) and confirm that no DTC is indicated. Is any malfunction DTC detected?	Go to Step 5.	END
5	1) Check DTC referring to “DTC CHECK” in this section. Is any malfunction DTC detected?	Go to Step 2.	Go to Step 3.

WARNING:
Carry out test in very little traffic area to prevent an accident.

NOTE:

- **As execution of "DTC CLEARANCE" will clear all malfunction DTCs, be sure to record all DTCs before servicing.**
- **When 2 or more codes are indicated, the lowest numbered code will appear first.**
- **If a code not listed on "DTC TABLE" is displayed, then the P/S control module is faulty.**
- **DTC C1122 or DTC No.22 (flashing pattern : 22) is indicated when ignition switch is ON and engine is not running but if DTC No.12 (flashing pattern : 12) is indicated when engine is started, it means nothing abnormal.**
- **Current DTC and history DTC can be identified by lighting and flashing of "EPS" warning lamp. "EPS" warning lamp operates as follow depending on the trouble condition.**

	Current DTC is set. (Abnormality exists at present.)	History DTC is set only. (Faulty condition occurred once in the past but normal condition is restored at present.)	Current DTC and history DTC exist.
"EPS" warning lamp after engine started	Remains ON.	Turn OFF.	Remains ON.
"EPS" warning lamp when shorting diagnosis switch terminal and ground terminal	Displays current DTC.	Displays history DTC.	Displays current DTC and history DTC.

For identify current DTC, clear history DTC referring to "DTC CLEARANCE" in this section.

CUSTOMER QUESTIONNAIRE (EXAMPLE)

Customer's name:	Model:	VIN:	
Date of issue:	Date Reg.	Date of problem:	Mileage:

Problem Symptoms	• Steering wheel feels heavy • Vehicle pulls to one side during straight driving • Poor recovery from turns • Too much play in steering • Abnormal noise while vehicle is running: from motor, from rack and pinon, other_____ • Other_____
Frequency of Occurrence	• Continuous/Intermittent (times a day, a month)/ other_____
Conditions for Occurrence of Problem	• Vehicle at stop & ignition switch ON: • When starting: at initial start only/at every start/Other_____ • Vehicle speed: while: while accelerating/while decelerating/at stop/ while turning/while running at constant speed/ other_____ • Road surface condition: Paved road/rough road/snow-covered road/other_____ • Chain equipment:
Environmental Condition	• Weather: fair/cloudy/rain/snow/other_____ • Temperature: °F (°C)
DTC	• First check: Normal code/malfunction code ( ) • Second check after driving test: Normal code/malfunction code ( )

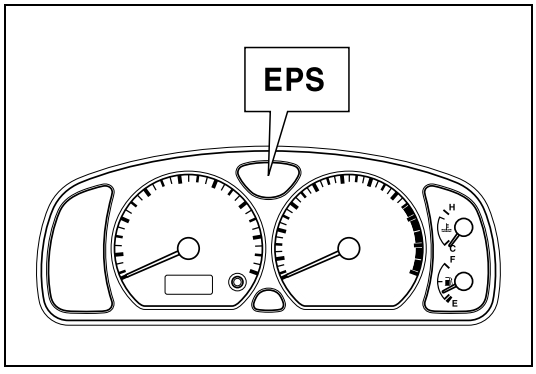

MALFUNCTION INDICATOR LAMP ("EPS" WARNING LAMP) CHECK

1) Turn ignition switch to ON position (but without running engine), check that malfunction indicator lamp ("EPS" warning lamp) lights up. If lamp does not light up, go to "TABLE A". If lamp flashes, go to "TABLE B".
2) Start engine and check that malfunction indictor lamp ("CHECK ENGIE" light) turns OFF.
   If lamp comes OFF, P/S system is in good condition.

DTC CHECK

USING SUZUKI SCAN TOOL

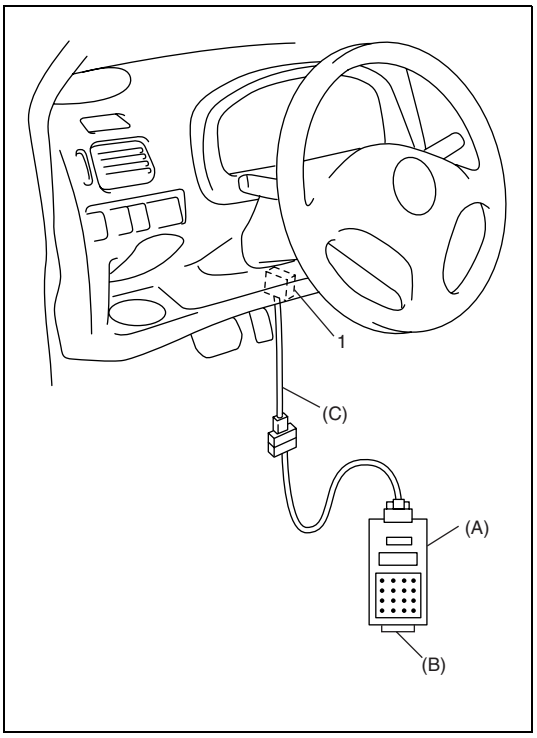

1) Turn ignition switch to OFF position.
2) After setting cartridge connect SUZUKI scan tool to data link connector (DLC) (1) located on underside of instrument panel at driver's seat side.

Special tool
(A) : 09931-76011
(B) : Master storage cartridge
(C) : 09931-76030

3) Turn ignition switch to ON position.
4) Read DTC according to instructions displayed on SUZUKI scan tool and print it or write it down referring to SUZUKI SCAN TOOL OPERATOR'S MANUAL for further details.

NOTE:

If Suzuki scan tool cannot display DTC, perform "SERIAL DATA LINK CIRCUIT CHECK" described in this section.

5) After completing the check, turn ignition switch to OFF position and disconnect SUZUKI scan tool from DLC.

NOT USING SUZUKI SCAN TOOL

1) Remove glove box.
2) Apply chocks to wheels, set shift lever to neutral position and pull parking brake fully.
3) Start engine.

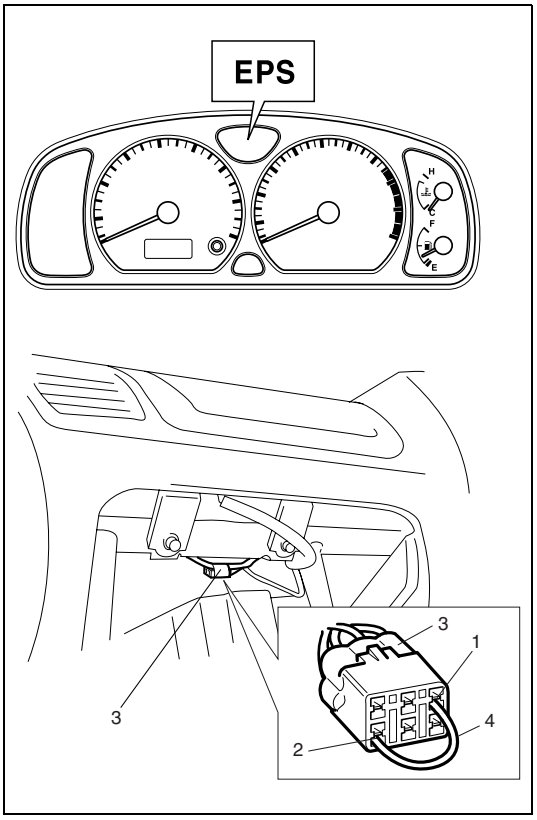

4) Using jumper wire (4), short diagnosis switch terminal (1) to ground terminal (2) of monitor coupler (3).
5) Read flashing of "EPS" warning lamp which represents DTC and write it down. When more than 2 DTCs are stored in memory, each DTC is repeated 3 times starting with the smallest DTC number in increasing order.
   For details and example of DTC, refer to "DTC TABLE".

NOTE:

DTC No.22 is indicated when ignition switch is ON and engine is not running but if DTC No.12 is indicated when engine is started, it means nothing abnormal.

6) After completing the check, turn ignition switch to OFF position and disconnect jumper wire (4) from monitor coupler.

DTC CLEARANCE

USING SUZUKI SCAN TOOL

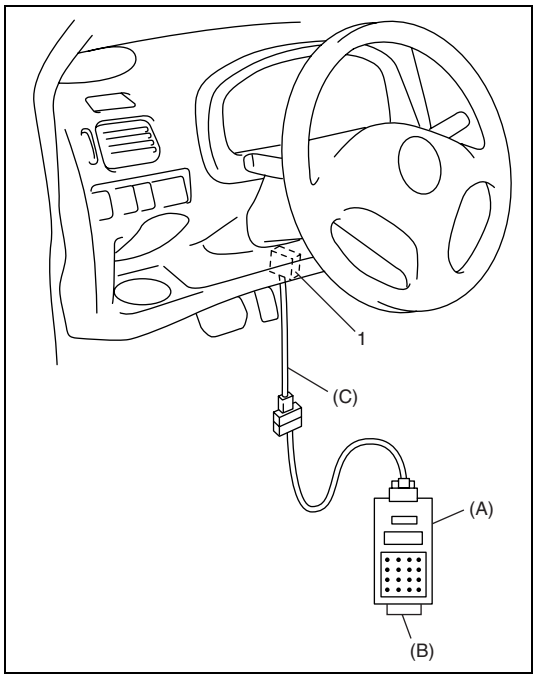

1) Turn ignition switch to OFF position.
2) After setting cartridge connect SUZUKI scan tool, connect scan tool to data link connector (DLC) (1) located on underside of instrument panel at driver's seat side.

Special tool
(A) : 09931-76011
(B) : Master storage cartridge
(C) : 09931-76030

3) Turn ignition switch to ON position.
4) Erase DTC according to instructions displayed on SUZUKI scan tool referring to "SUZUKI SCAN TOOL OPERATOR'S MANUAL" for further details.
5) After completing the check, turn ignition switch to OFF position and disconnect SUZUKI scan tool from DLC.

NOT USING SUZUKI SCAN TOOL

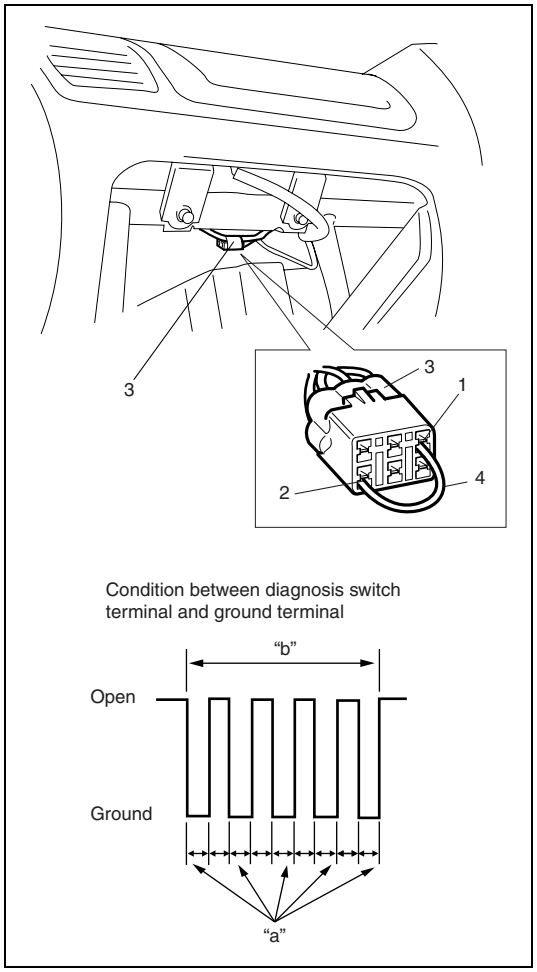

1) Remove glove box.
2) Turn ignition switch to ON position.
3) Using jumper wire, short diagnosis switch terminal (1) to ground terminal (2) of monitor coupler (3).
4) Make the disconnected end of jumper wire (4) contact where disconnected (short) and repeat these actions (open and short) at least 5 times within 10 seconds.

DTC clearance procedure specification
"a" : about 1 second
"b" : within 10 seconds

5) Perform "DTC CHECK" and confirm that normal DTC (DTC No.12) is displayed and not malfunction DTC.

SERIAL DATA LINK CIRCUIT CHECK

CAUTION:
Be sure to perform "SYSTEM CHECK FLOW TABLE" before starting diagnosis according to flow table.

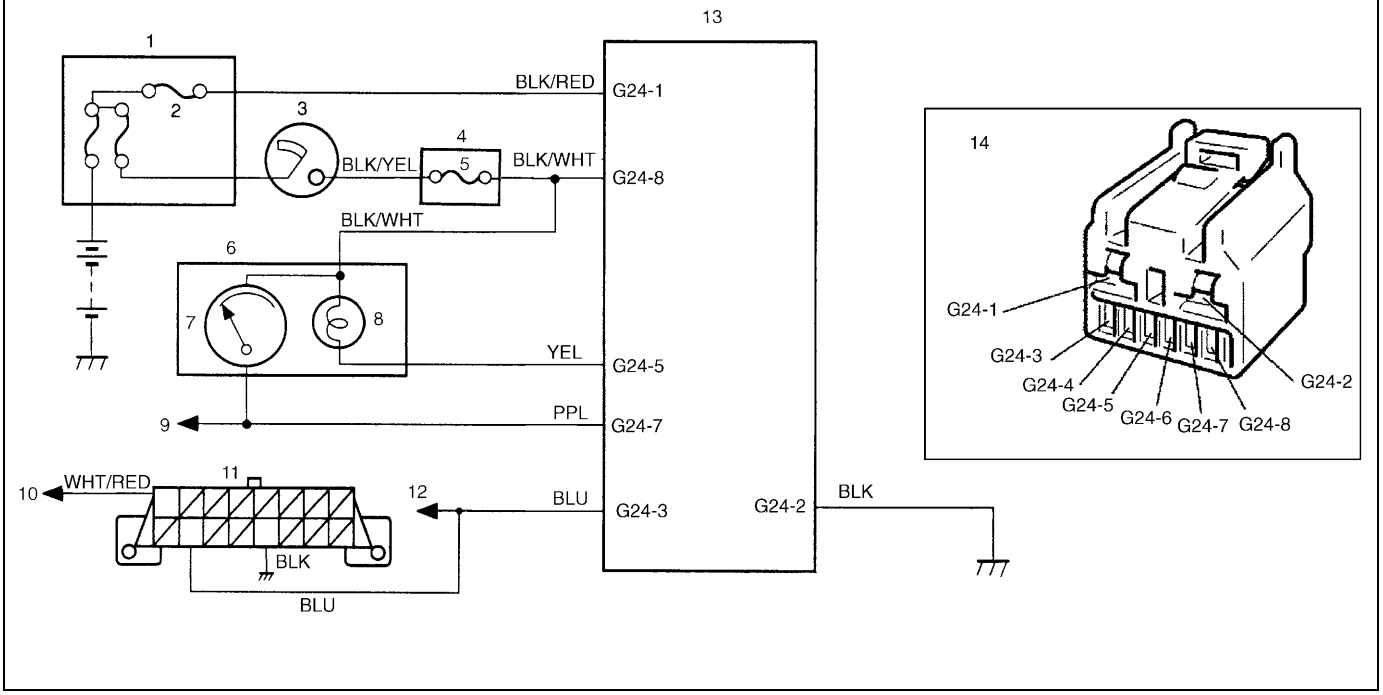

1. Main fuse box	6. Combination meter	11. Data link connector (DLC)
2. "EPS" fuse (30 A)	7. Speedometer	12. To ECM, SDM and ABS hydraulic unit/control module assembly (if equipped)
3. Ignition switch	8. "EPS" warning lamp	13. P/S control module
4. Circuit fuse box	9. To vehicle speed sensor (VSS)	14. Connector "G24"
5. "IG coil" fuse (15 A)	10. To main fuse box	

DIAGNOSTIC FLOW TABLE

Step	Action	Yes	No
1	Was "SYSTEM CHECK FLOW TABLE" performed?	Go to Step 2.	Go to "SYSTEM CHECK FLOW TABLE" in this section.
2	1) Make sure that SUZUKI scan tool free from malfunction and correct cartridge for P/S system is used. 2) Turn ignition switch to OFF position. 3) Check proper connection of SUZUKI scan tool to DLC. Is connection in good condition?	Go to Step 3.	Properly connect SUZUKI scan tool to DLC.

Step	Action	Yes	No
3	1) Check if communication is possible by trying communication with other controller (ECM, ABS hydraulic unit/control module assembly (if equipped) or SDM). Is it possible to communicate with other controller?	Go to Step 4.	Repair open in common section of serial data circuit (“BLU” wire circuit) used by all controllers or short to ground or power circuit which has occurred somewhere in serial data circuit (“BLU” wire circuit).
4	1) With ignition switch is OFF position, disconnect 8-pin (“G24”) connector from P/S control module. 2) Check proper connection at “G24-3” (“BLU” wire) terminal for serial data circuit. 3) If OK, then check resistance between “G24-3” (“BLU” wire) terminal and “BLU” wire terminal for serial data circuit in DLC. Is resistance 1 Ω or less?	Substitute a known-good P/S control module and recheck.	Repair high resistance or open in “BLU” wire circuit for P/S system.

Fig. for Step 4

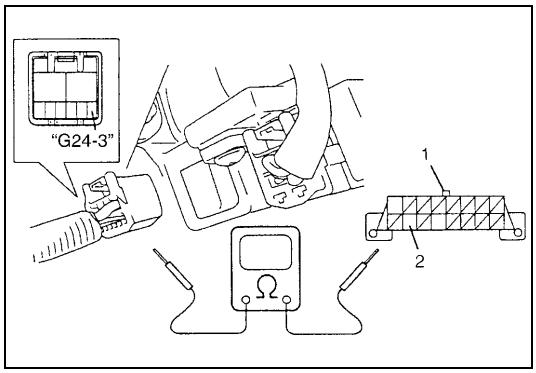

1. DLC
2. “BLU” wire terminal

DTC TABLE

CAUTION:

Be sure to perform “SYSTEM CHECK FLOW TABLE” before starting diagnosis according to flow table of each DTC.

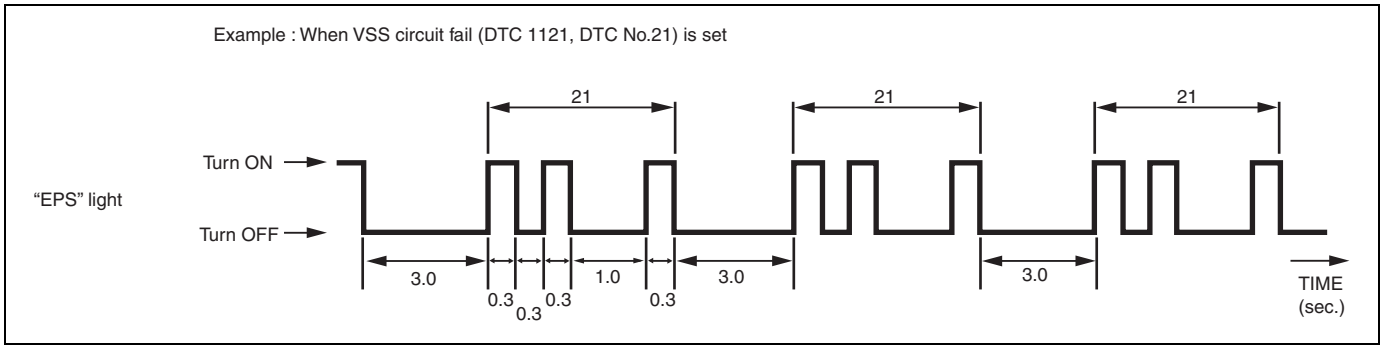

DTC (displayed on SUZUKI scan tool)	"EPS" light flashing pattern		DIAGNOSTIC ITEM	DIAGNOSIS
	DTC (indicated by "EPS" light flashing pattern)	Model		
NO DTC	12		Normal	This code appears when none of the other codes are identified.
C1111	11		Torque sensor	Diagnose trouble according to "DIAGNOSTIC FLOW TABLE" corresponding to each code No.
C1113	13			
C1114	14			
C1115	15			
C1116	16			
C1121	21		VSS signal	
C1123	23			
C1124	24			
C1122	22		Engine speed signal	
C1141	41		Motor	
C1142	42			
C1143	43			
C1144	44			
C1145	45			
C1151	51		Clutch	
C1152	52		P/S control module	
C1154	54			
C1155	55			
C1153	53		P/S control module power supply	

TABLE A - MALFUNCTION INDICATOR LAMP DOES NOT COME ON AT IGNITION SWITCH ON BUT LEAVING ENGINE OFF

CIRCUIT

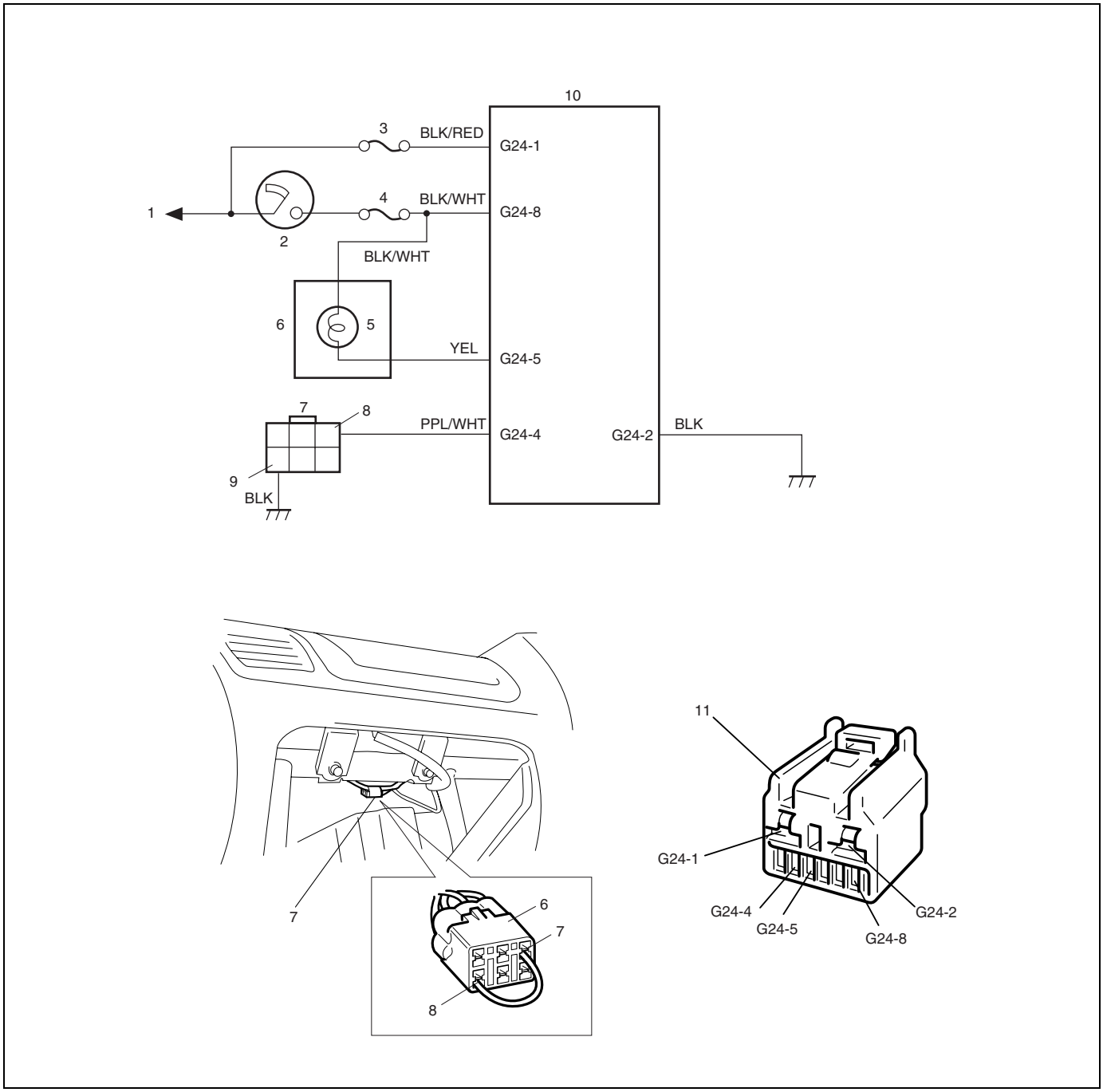

1. To main fuse	5. "EPS" warning lamp	9. Ground terminal
2. Ignition switch	6. Combination meter	10. P/S control module
3. "P/S" fuse (30A) in fuse box	7. Monitor coupler	11. Connector "G24"
4. "IG METER" fuse (15A) in fuse box	8. Diagnosis switch terminal	

INSPECTION

Step	Action	Yes	No
1	1) Set parking brake. 2) Note combination meter when ignition switch is turned to ON position. Does the “BRAKE” indicator (warning lamp) come ON?	Go to Step 2.	“BLK/YEL”, “BLK/WHT” wire circuit or “IG METER” fuse open or short to ground.
2	1) Ignition switch OFF. 2) Remove and inspect “P/S” fuse. Is fuse in good condition?	Go to Step 3.	Check “BLK/RED” wire circuit for short to ground. If OK, replace “P/S” fuse.
3	1) With ignition switch OFF, reinstall fuse and disconnect P/S control module connector (“G24”). 2) Check proper connection to P/S control module at “G24-1” terminal. 3) If OK, check voltage between “G24-1” (“BLK/RED” wire) terminal and body ground with ignition switch ON. Is it 10 – 14 V?	Go to Step 4.	“BLK/RED” wire circuit open or short to ground.
4	1) Check proper connection to P/S control module at “G24-8” terminal. 2) If OK, check voltage between “G24-8” (“BLK/WHT” wire) terminal and body ground with ignition switch ON. Is it 10 – 14 V?	Go to Step 5.	“BLK/WHT” wire circuit open or short to ground.
5	1) Check proper connection to P/S control module at “G24-5” terminal. 2) If OK, check voltage between “G24-5” (“YEL” wire) terminal and body ground with ignition switch ON. Is it 10 – 14 V?	Substitute a known-good P/S control module and recheck.	Go to Step 6.
6	1) Remove combination meter. Refer to “COMBINATION METER” in Section 8. 2) Remove and inspect “EPS” light bulb. Is bulb in good condition?	“YEL”, “BLK/WHT” wire circuit or inside of combination meter open or short to other circuit.	Check “YEL” wire circuit for short to ground. If OK, replace “EPS” light bulb.

TABLE B - MALFUNCTION INDICATOR LAMP FLASHES AT IGNITION SWITCH ON

CIRCUIT

Refer to TABLE-A for System Circuit Diagram.

Step	Action	Yes	No
1	1) Check monitor coupler. Is it connected diagnosis switch terminal (“8”) and ground terminal (“9”) in monitor connector by jumper wire?	Disconnect jumper wire from monitor coupler.	Go to Step 2.
2	1) Check voltage between diagnosis switch terminal of monitor coupler and body ground with ignition switch ON. Is it 10 – 14 V?	Substitute a known-good P/S control module and recheck.	“PPL/WHT” wire circuit short to ground.

TABLE C - MALFUNCTION INDICATOR LAMP DOES NOT FLASH, JUST REMAINS ON OR JUST REMAINS OFF EVEN WITH DIAGNOSIS SWITCH TERMINAL GROUNDED

CIRCUIT

Refer to TABLE-A for System Circuit Diagram.

Step	Action	Yes	No
1	1) Inspect connection between diagnosis switch and ground terminals on monitor coupler by jumper wire. Is it securely connected between them by jumper wire?	Go to Step 2.	Properly connection diagnosis switch and ground terminals on monitor coupler by jumper wire.
2	1) With ignition switch OFF, disconnect P/S control module connector (“G24”). 2) Check proper connection to P/S control module at “G24-4” terminal. 3) If OK, check resistance between “G24-4” (“PPL/WHT” wire) terminal and diagnosis switch terminal of monitor coupler. Is there continuity?	Go to Step 3.	“PPL/WHT” wire circuit open.
3	1) Check proper connection to P/S control module at “G24-2” terminal. 2) If OK, check resistance between “G24-2” (“BLK” wire) terminal and body ground. Is there continuity?	Go to Step 4.	“BLK” wire circuit open.
4	1) Check proper connection to P/S control module at “G24-5” terminal. 2) If OK, check voltage between “G24-5” (“YEL” wire) terminal and body ground with ignition switch ON. Is it 10 – 14 V?	Substitute a known-good P/S control module and recheck.	“YEL” wire circuit or inside of combination meter short to other circuit or ground.

DTC C1111 (DTC No.11) TORQUE SENSOR MAIN CIRCUIT FAILURE
DTC C1113 (DTC No.13) TORQUE SENSOR MAIN AND SUB CIRCUIT FAILURE
DTC C1115 (DTC No.15) TORQUE SENSOR SUB CIRCUIT FAILURE

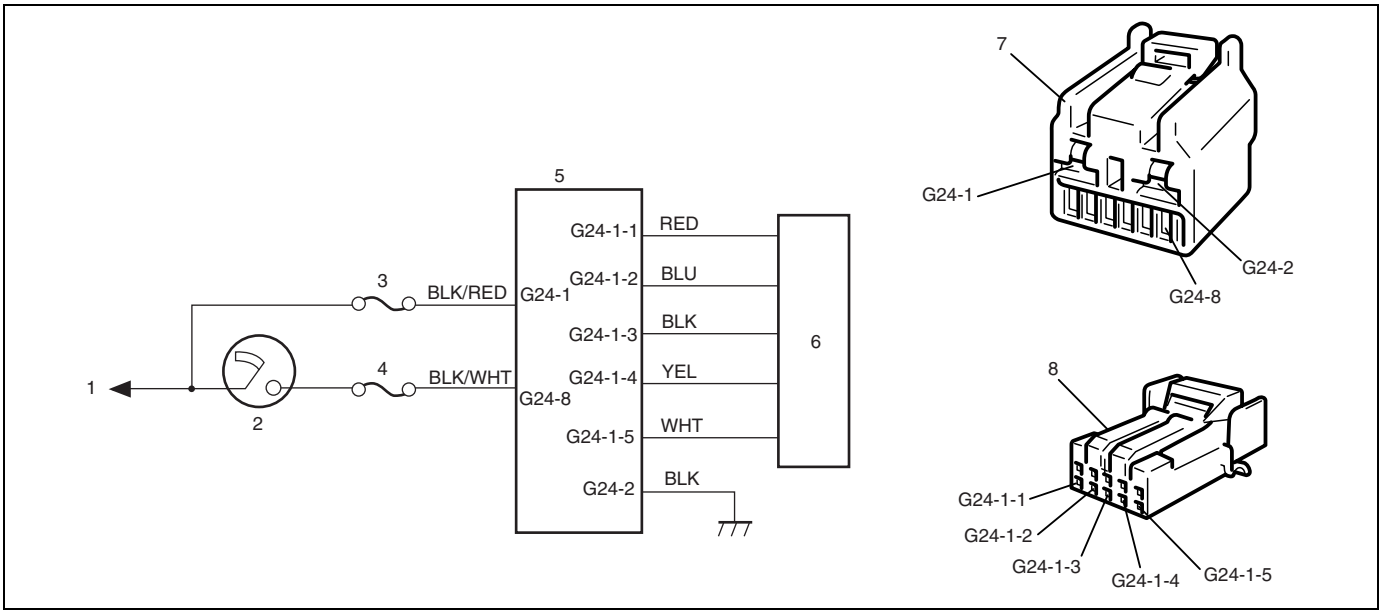

1. To main fuse	4. "IG METER" fuse (15A) in fuse box	7. Connector "G24"
2. Ignition switch	5. P/S control module	8. Connector "G24-1"
3. "P/S" fuse (30A) in fuse box	6. Torque sensor	

Step	Action	Yes	No
1	1) Was "SYSTEM CHECK FLOW TABLE" performed?	Go to STEP 2.	Go to "SYSTEM CHECK FLOW TABLE".
2	1) Is DTC C1114 (DTC No.14) or C1116 (DTC No.16) indicated, too?	Go to flow table corresponding to each DTC No.	Go to STEP 3.
3	1) Check proper connection for 5-terminals connector ("G24-1") to P/S control module. 2) If OK, check torque sensor and its circuit. Refer to "TORQUE SENSOR". Is torque sensor in good condition?	Substitute a known-good P/S control module and recheck.	Replace steering column assembly and recheck.

DTC C1114 (DTC No.14) TORQUE SENSOR 5V POWER SUPPLY CIRCUIT FAILURE

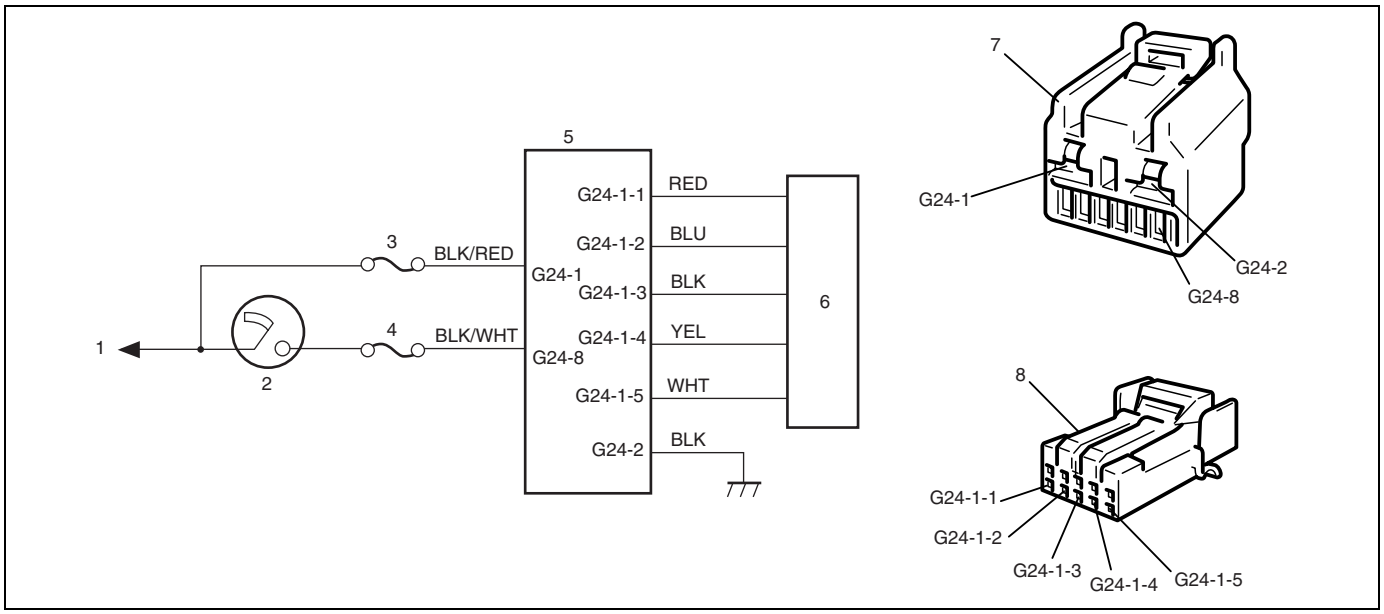

1. To main fuse	4. "IG METER" fuse (15A) in fuse box	7. Connector "G24"
2. Ignition switch	5. P/S control module	8. Connector "G24-1"
3. "P/S" fuse (30A) in fuse box	6. Torque sensor	

Step	Action	Yes	No
1	Was "SYSTEM CHECK FLOW TABLE" performed?	Go to STEP 2.	Go to "SYSTEM CHECK FLOW TABLE".
2	1) Remove steering column hole cover. 2) Check proper connection for 5-terminals connector ("G24-1") to P/S control module. 3) If OK, turn ignition switch ON. 4) Check voltage between "G24-1-2" ("BLU" wire) terminal of 5-terminals connector ("G24-1") and body ground with connector ("G24-1") connected to P/S control module. Is it about 5 V?	Go to STEP 3.	Repair high resistance, open or short to power circuit or ground in 5V power supply ("BLU" wire) circuit.
3	1) Check torque sensor and its circuit. Refer to "TORQUE SENSOR". Is torque sensor in good condition?	Substitute a known-good P/S control module and recheck.	Replace steering column assembly and recheck.

Fig. for Step 2

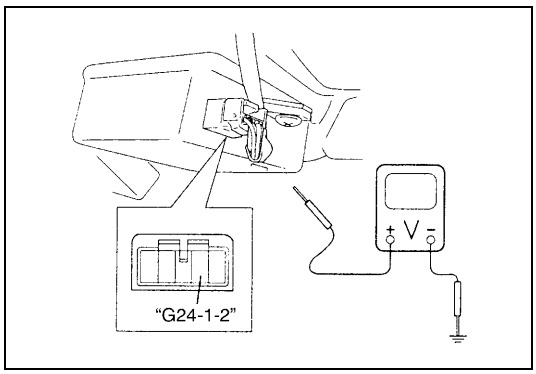

DTC C1116 (DTC No.16) TORQUE SENSOR 8V POWER SUPPLY CIRCUIT FAILURE

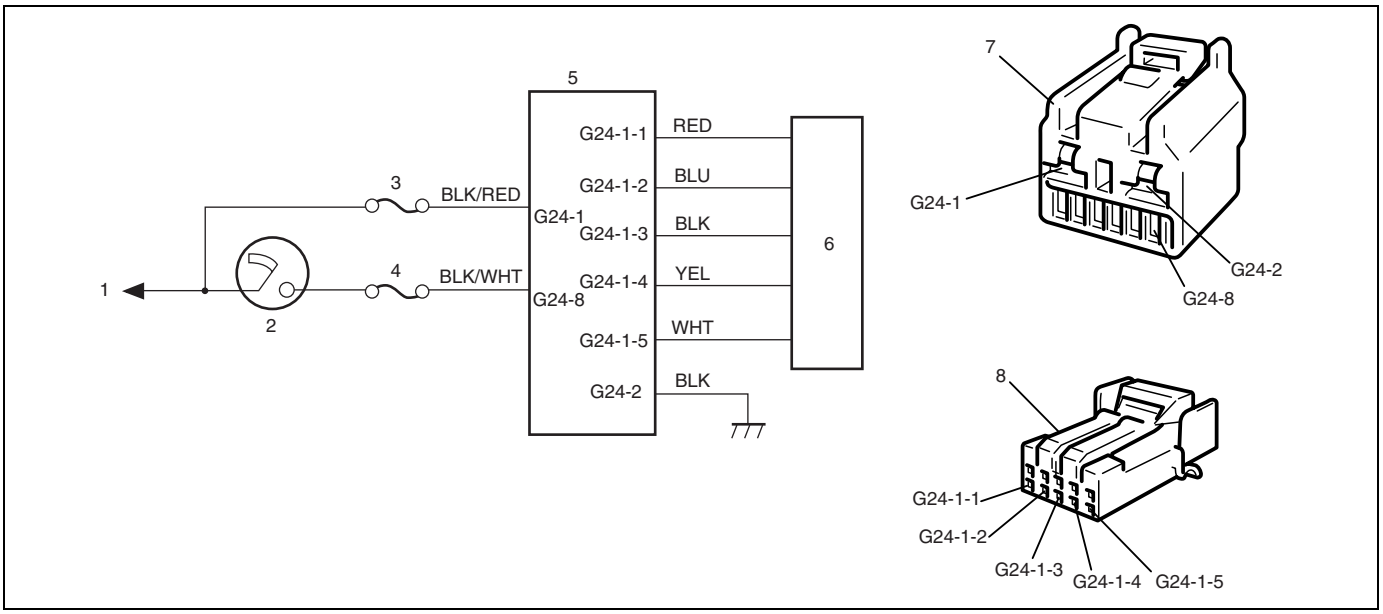

1. To main fuse	4. "IG METER" fuse (15A) in fuse box	7. Connector "G24"
2. Ignition switch	5. P/S control module	8. Connector "G24-1"
3. "P/S" fuse (30A) in fuse box	6. Torque sensor	

Step	Action	Yes	No
1	Was "SYSTEM CHECK FLOW TABLE" performed?	Go to STEP 2.	Go to "SYSTEM CHECK FLOW TABLE".
2	1) Remove steering column hole cover. 2) Check proper connection for 5-terminals connector ("G24-1") to P/S control module. 3) If OK, turn ignition switch ON. 4) Measure voltage between "G24-1-1" ("RED" wire) terminal of 5-terminals connector ("G24-1") and body ground with connector ("G24-1") connected to P/S control module. Is it about 8 V?	Go to STEP 3.	Repair high resistance, open or short to power circuit or ground in 8V power supply ("RED" wire) circuit.
3	1) Check torque sensor and its circuit. Refer to "TORQUE SENSOR". Is torque sensor in good condition?	Substitute a known-good P/S control module and recheck.	Replace steering column assembly and recheck.

Fig. for Step 2

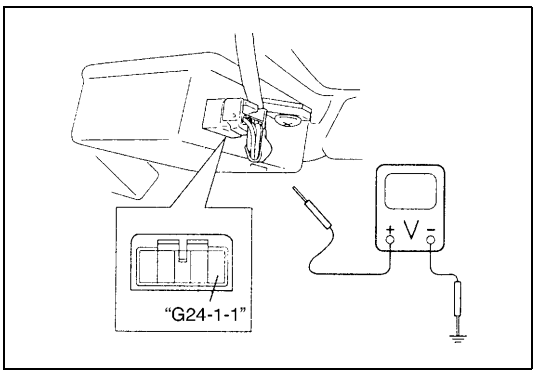

DTC C1121/C1123/C1124 (DTC No.21/23/24) VSS CIRCUIT FAILURE

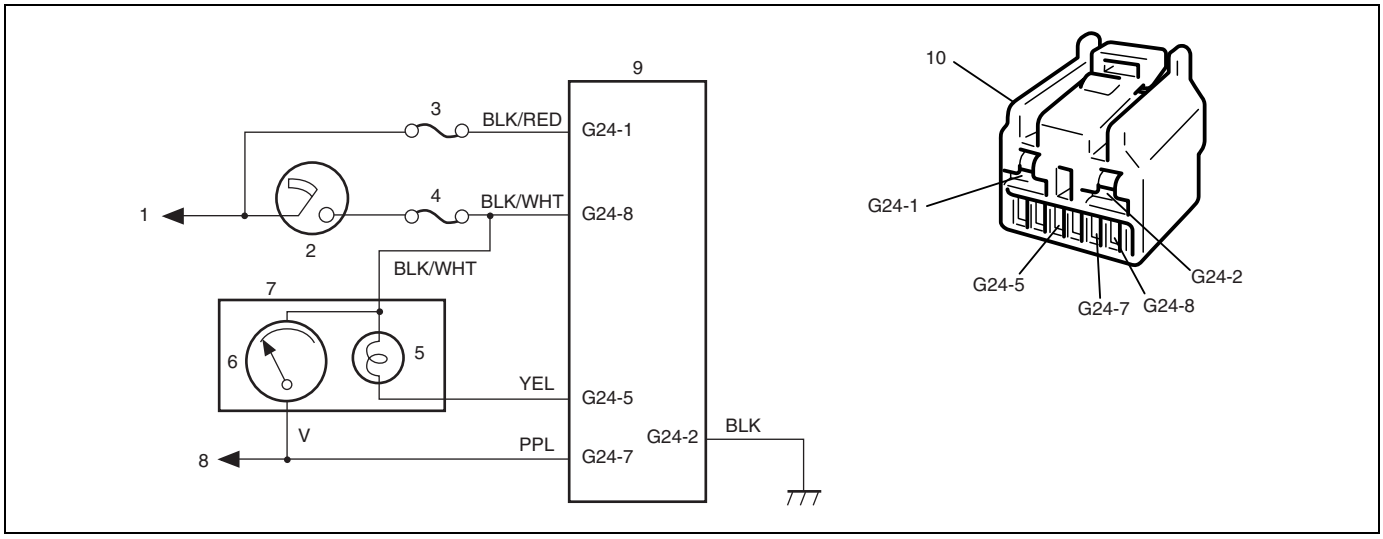

1. To main fuse	5. "EPS" warning lamp	9. P/S control module
2. Ignition switch	6. Speedometer	10. Connector "G24"
3. "P/S" fuse (30A) in fuse box	7. Combination meter	
4. "IG METER" fuse (15A) in fuse box	8. To VSS	

Step	Action	Yes	No
1	Was "SYSTEM CHECK FLOW TABLE" performed?	Go to STEP 2.	Go to "SYSTEM CHECK FLOW TABLE".
2	1) Ignition switch OFF. 2) Remove steering column lower cover. 3) Disconnect 8-terminals connector ("G24") from P/S control module. 4) Check proper connection to P/S control module at "G24-7" ("PPL" wire) terminal. 5) If OK, connect voltmeter between "G24-7" ("PPL" wire) terminal and body ground with connector ("G24") connected. 6) Hoist rear end of vehicle and lock rear right tire. 7) Turn rear left tire quickly with ignition switch ON. Does voltmeter indicate deflection between 0 – 1 V and 9 – 11 V a few times while tire is turned one revolution?	Check intermittent trouble. Refer to "INTERMITTENT TROUBLE" in SECTION 0A. If OK, substitute a known-good P/S control module and recheck.	Repair VSS or its ("PPL" wire) circuit.

Fig. for Step 2

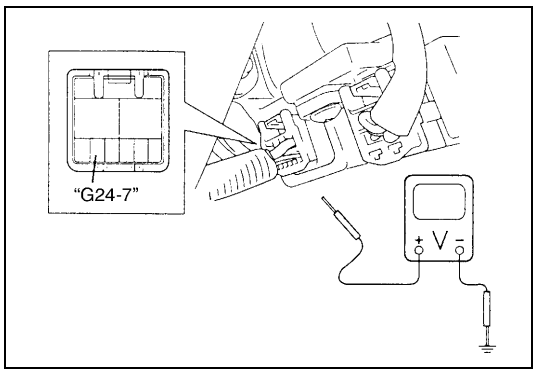

DTC C1122 (DTC No.22) ENGINE SPEED SIGNAL CIRCUIT FAILURE

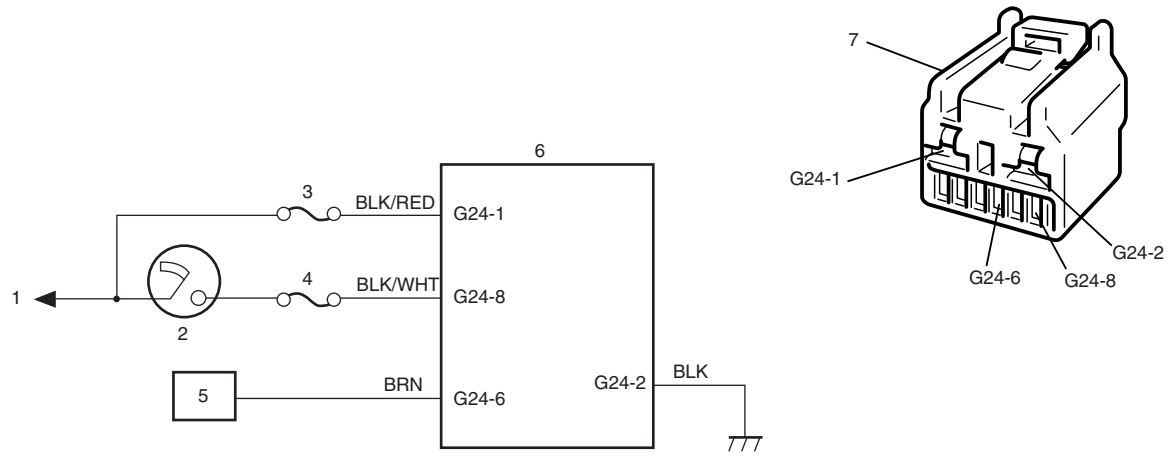

1. To main fuse	4. "IG METER" fuse (15A) in fuse box	7. Connector "G24"
2. Ignition switch	5. ECM	
3. "P/S" fuse (30A) in fuse box	6. P/S control module	

Step	Action	Yes	No
1	Was "SYSTEM CHECK FLOW TABLE" performed?	Go to STEP 2.	Go to "SYSTEM CHECK FLOW TABLE".
2	1) Recheck DTC with engine running. Is DTC C1122 (DTC No.22) indicated?	Go to STEP 3.	It is nothing abnormal for DTC C1122 (DTC No.22). P/S system is in normal condition.
3	1) Check proper connection to P/S control module and ECM at each "BRN" wire terminal (P/S control module side: "G24-6" terminal, ECM side : Refer to in SECTION 6E), then check intermittent trouble. Refer to "INTERMITTENT TROUBLE" in SECTION 0A. 2) If they are OK, check high resistance, open or short to power circuit or ground in "BRN" wire circuit. Is check result in good condition?	Substitute a known-good P/S control module and recheck.	Repair.

DTC C1141/C1142/C1143/C1144/C1145 (DTC No.41/42/43/44/45) MOTOR CIRCUIT FAILURE

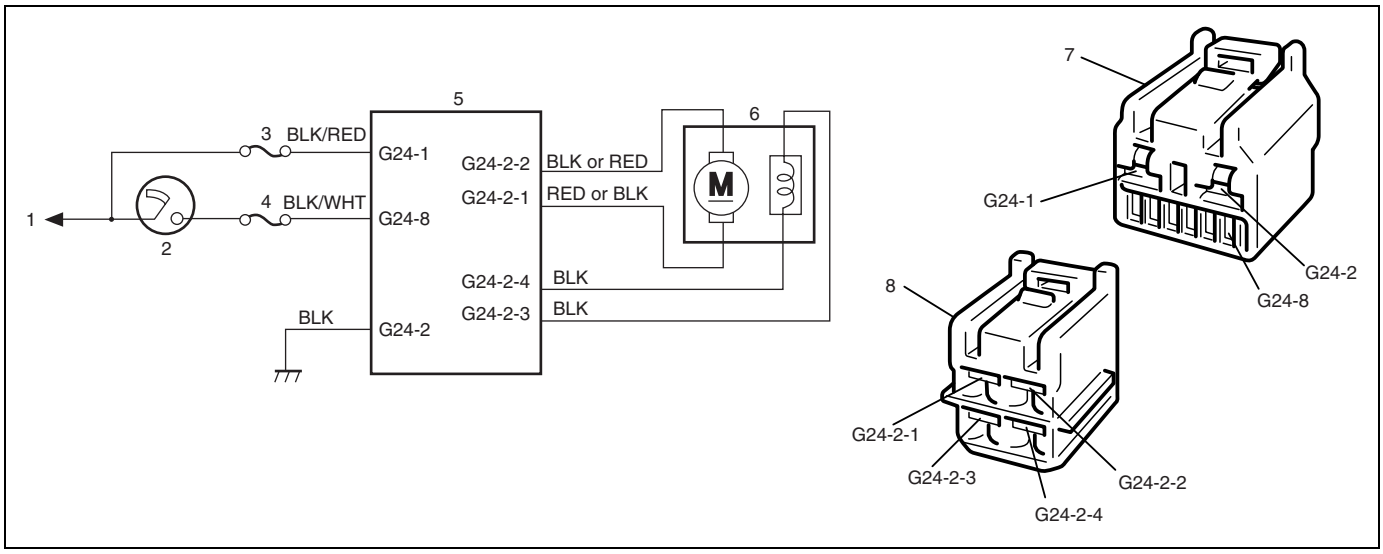

1. To main fuse	4. "IG METER" fuse (15A) in fuse box	7. Connector "G24"
2. Ignition switch	5. P/S control module	8. Connector "G24-1"
3. "P/S" fuse (30A) in fuse box	6. Motor and clutch	

Step	Action	Yes	No
1	Was "SYSTEM CHECK FLOW TABLE" performed?	Go to STEP 2.	Go to "SYSTEM CHECK FLOW TABLE".
2	1) Remove steering column hole cover. 2) Check proper connection for 4-terminals connector ("G24-2") to P/S control module. 3) If OK, start engine. 4) Check voltage between "G24-2-2" ("BLK" wire or "RED wire) terminal and body ground and "G24-2-1" ("RED" wire or "BLK" wire) terminal and body ground with connector ("G24-2") connected to P/S control module. Are they 5 – 7 V with steering wheel held at position for vehicle to run straight?	Go to STEP 3.	Repair poor connection, high resistance, open or short to power circuit or ground in "G24-2" ("BLK" wire or "RED" wire) or "G24-2-1" ("RED" wire or "BLK" wire) circuit.
3	1) Check motor and its circuit. Refer to "MOTOR AND CLUTCH". Is motor and clutch in good condition?	Substitute a known-good P/S control module and recheck.	Replace steering column assembly and recheck.

Fig. for Step 2

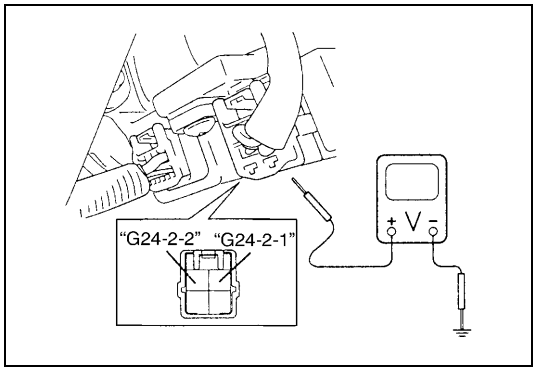

DTC C1151 (DTC No.51) CLUTCH CIRCUIT FAILURE

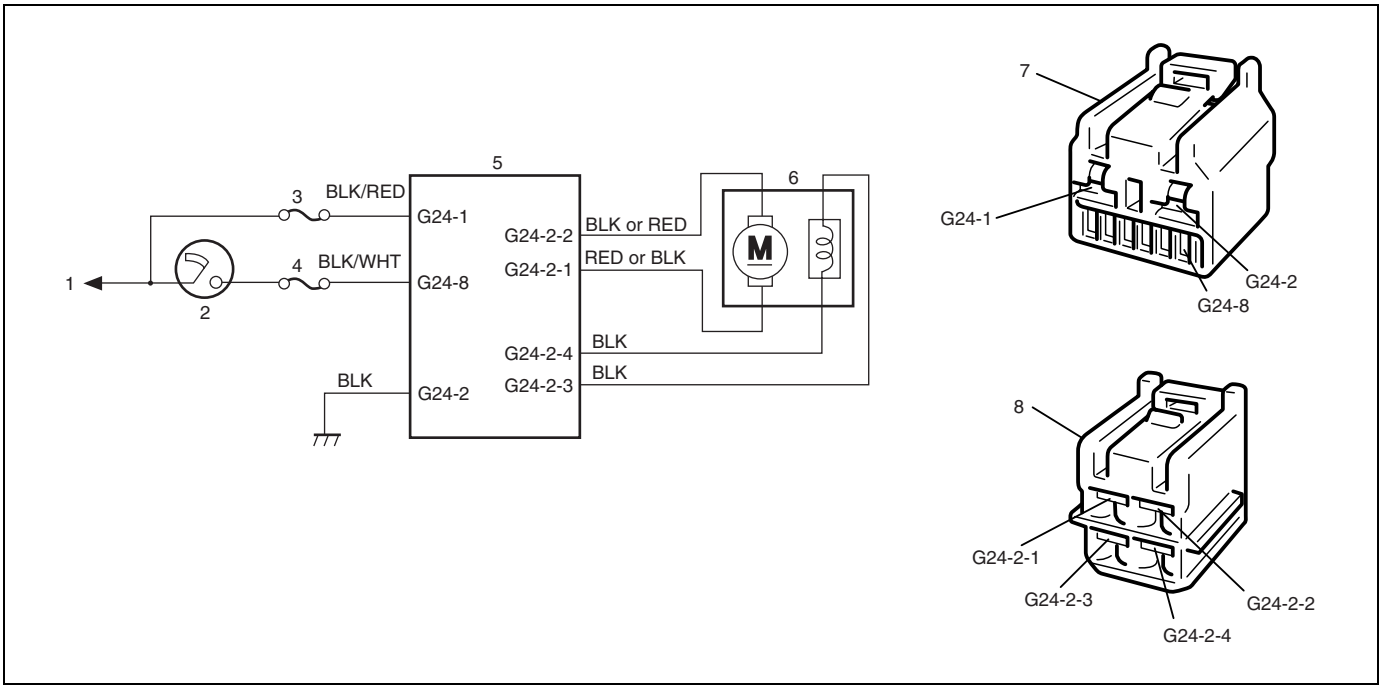

1. To main fuse	4. "IG METER" fuse (15A) in fuse box	7. Connector "G24"
2. Ignition switch	5. P/S control module	8. Connector "G24-2"
3. "P/S" fuse (30A) in fuse box	6. Motor and clutch	

Step	Action	Yes	No
1	Was "SYSTEM CHECK FLOW TABLE" performed?	Go to STEP 2.	Go to "SYSTEM CHECK FLOW TABLE".
2	1) Remove steering column lower cover. 2) Check proper connection for 4-terminals connector ("G24-2") to P/S control module. 3) If OK, start engine. 4) Check voltage between "G24-2-4" ("BLK" wire) terminal and body ground with connector ("G24-2") connected to P/S control module. Is it 0 V?	Go to STEP 3.	Repair poor connection, high resistance, open or short to power circuit or ground in "G24-2-4" ("BLK" wire) circuit.
3	1) Check voltage between "G24-2-3" ("BLK" wire) terminal and body ground with connector ("G24-2") connected to P/S control module. Is it 10 – 14 V with steering wheel held at position for vehicle to run straight?	Go to STEP 4.	Repair poor connection, high resistance, open or short to power circuit or ground in "G24-2-3" ("BLK" wire) circuit.
4	1) Check motor and its circuit. Refer to "MOTOR AND CLUTCH". Is motor and clutch in good condition?	Substitute a known-good P/S control module and recheck.	Replace steering column assembly and recheck.

Fig. for Step 2

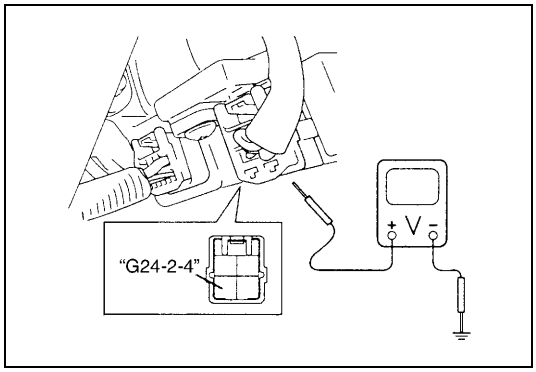

Fig. for Step 3

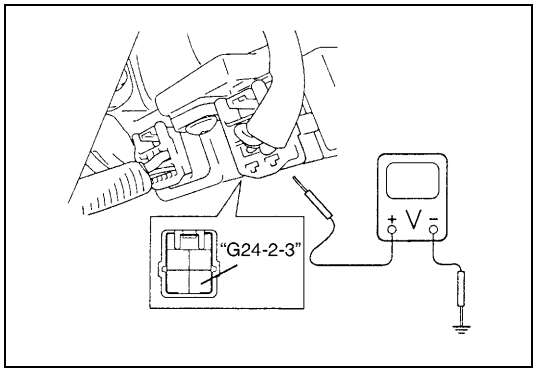

DTC C1153(DTC No.53) P/S CONTROL MODULE POWER SUPPLY CIRCUIT FAILURE

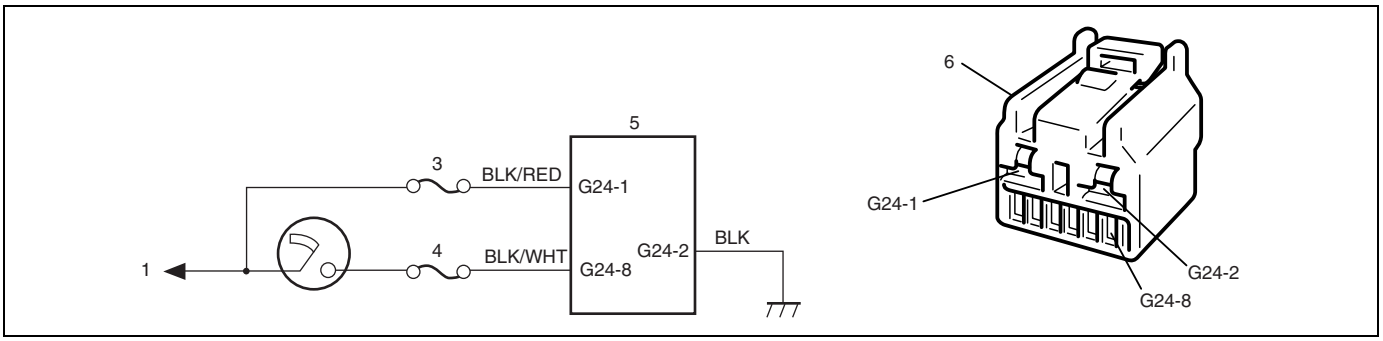

1. To main fuse	3. "P/S" fuse (30A) in fuse box	5. P/S control module
2. Ignition switch	4. "IG METER" fuse (15A) in fuse box	6. Connector "G24"

Step	Action	Yes	No
1	Was "SYSTEM CHECK FLOW TABLE" performed?	Go to STEP 2.	Go to "SYSTEM CHECK FLOW TABLE".
2	1) Remove steering column lower cover. 2) Check "P/S" fuse and proper connection to P/S control module at "G24-1" ("BLK/WHT" wire) terminal. 3) If OK, check voltage between "G24-1" terminal and body ground with connector ("G24") connected to P/S control module. Is it 10 – 14 V?	Check intermittent trouble. Refer to "INTERMITTENT TROUBLE" in SECTION 0A. If OK, substitute a known-good P/S control module and recheck.	Repair poor connection or high resistance in "G24-1" ("BLK/RED" wire) circuit.

Fig. for Step 2

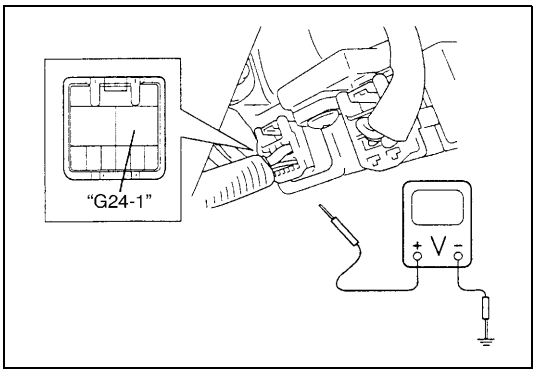

DTC C1152/C1154/C1155 (DTC No.52/54/55) P/S CONTROL MODULE FAILURE

Substitute a known-good P/S control module and recheck.

TROUBLE DIAGNOSIS (FOR TROUBLE NOT INDICATED BY ON BOARD DIAGNOSTIC SYSTEM)

This section describes trouble diagnosis of P/S system parts whose trouble is not indicated by the on-board diagnostic system (self-diagnostic function).
When DTC No.12 is indicated by the on-board diagnostic system (self-diagnosis function) and assuredly those steering basic parts as described in “DIAGNOSIS TABLE” in Section 3 are all in good condition, check the following power steering system parts which may be a possible cause for each symptom of the steering.

Condition	Possible Cause	Correction
Steering wheel feels heavy (Perform STEERING FORCE INSPECTION before diagnosis.)	Steering wheel installed improperly (twisted)	Install steering wheel correctly.
	Poor performance of torque sensor	Check torque sensor. Refer to “TORQUE SENSOR”.
	Poor performance of motor and clutch	Check motor and clutch. Refer to “MOTOR AND CLUTCH”.
	Faulty steering column	Replace.
	Poor performance of VSS	Check VSS. Refer to Section 6E.
Vehicle pulls to one side during straight driving	Poor performance of torque sensor	Check torque sensor. Refer to “TORQUE SENSOR”.
Poor recovery from turns	Poor performance of torque sensor	Check torque sensor. Refer to “TORQUE SENSOR”.
	Faulty steering column	Replace.

INSPECTION OF P/S CONTROL MODULE AND ITS CIRCUITS

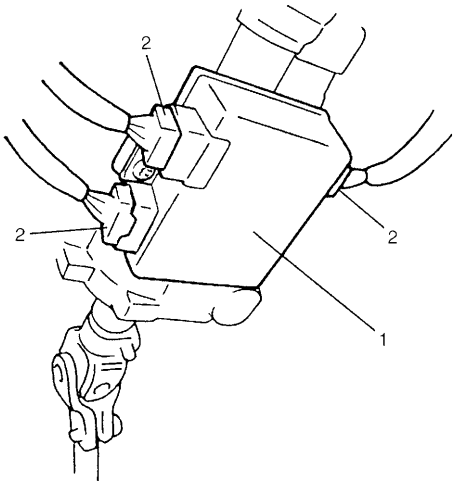

P/S control module (1) and its circuits can be checked at P/S control module wiring couplers (2) by measuring voltage and resistance.

CAUTION:
P/S control module cannot be checked by itself. It is strictly prohibited to connect voltmeter or ohmmeter to P/S control module with connector disconnected from it.

Voltage Check

1) Remove steering column lower cover with ignition switch OFF position.
2) Check voltage at each terminal with connectors (2) connected P/S control module.

NOTE:
As each terminal voltage is affected by the battery voltage, confirm that it is 11V or more when ignition switch is ON.

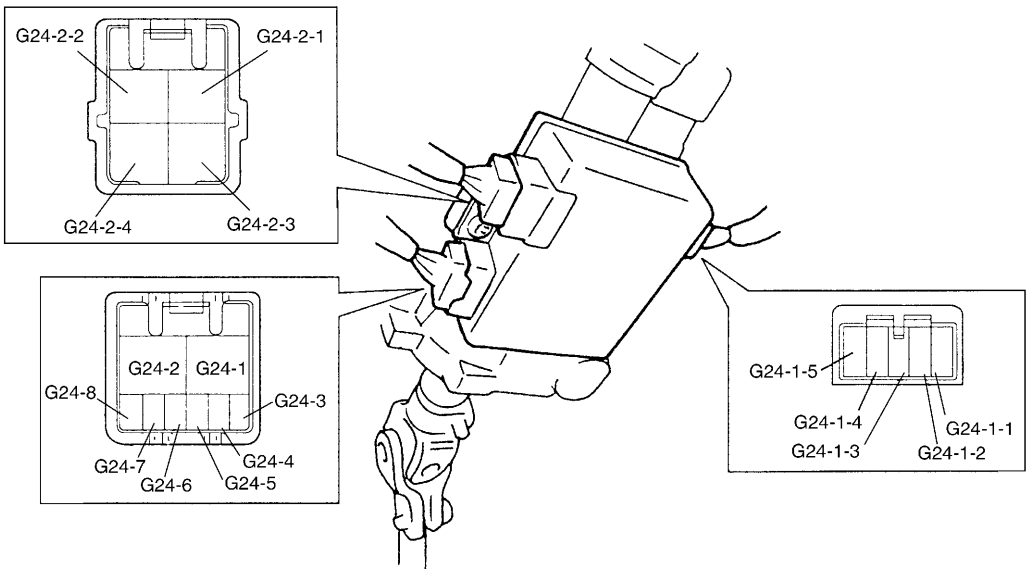

TERMINAL NO.	CIRCUIT	NORMAL VOLTAGE	CONDITION
G24-2	Ground	–	–
G24-1	P/S control module power supply from battery	10 – 14V	–
G24-8	P/S control module power supply from ignition switch	10 – 14V	Ignition switch ON
G24-7	VSS	✱ Indicator deflection repeated 0 – 1V and 9 – 11V	Ignition switch ON Front left tire turned quickly with right tire locked
G24-6	Engine speed signal	✱ Indicator deflection repeated 0 – 1V and 10 – 14V	Engine idling
G24-5	"EPS" light	0V	"EPS" warning lamp ON
G24-4	Diagnosis switch terminal	0 – 14V	Ignition switch ON
G24-3	Data link connector	–	–
G24-2-2	Motor output 2	5 – 7V	Engine idling and steering wheel held at position for vehicle to run straight
G24-2-1	Motor output 1	5 – 7V	Engine idling and steering wheel held at position for vehicle to run straight
G24-2-4	Clutch output 2	0V	–
G24-2-3	Clutch output 1	10 – 14V	Engine idling
G24-1-5	Torque sensor (Main)	About 2.5V	Ignition switch ON and steering wheel held at position for vehicle to run straight Check voltage between "G24-1-5" and "G24-1-3" terminals
G24-1-4	Torque sensor (Sub)	About 2.5V	Ignition switch ON and steering wheel held at position for vehicle to run straight Check voltage between "G24-1-4" and "G24-1-3" terminals
G24-1-3	Torque sensor (GND)	0V	–
G24-1-2	5V power supply for torque sensor	About 5V	Ignition switch ON Check voltage between "G24-1-2" and "G24-1-3" terminals
G24-1-1	8V power supply for torque sensor	About 8V	Ignition switch ON Check voltage between "G24-1-1" and "G24-1-3" terminals

NOTE:

✱ : The voltage of this circuit may fail to check by voltmeter.
If so, use oscilloscope.

STEERING WHEEL PLAY INSPECTION

Check steering wheel for looseness or rattle by trying to move it in its shaft direction and lateral direction.
If found defective, repair or replace.

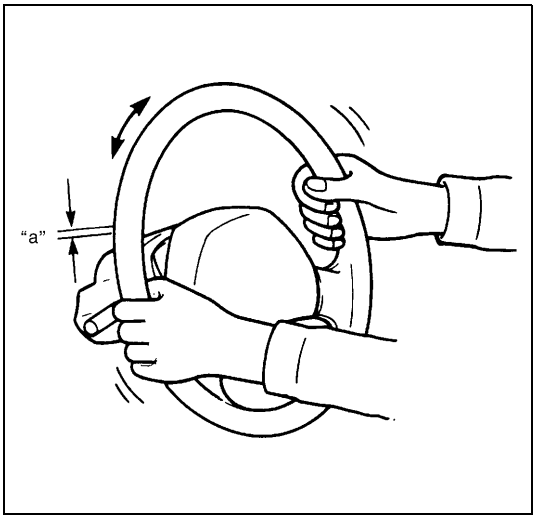

Check steering wheel play, holding vehicle in straight forward condition on the ground and with engine stopped.
If steering wheel play is not within specification, inspect as follows and replace if found defective.

- Tie rod end ball stud for wear
- Lower ball joint for wear
- Steering shaft joint for wear
- Steering pinion or rack gear for wear or breakage
- Each part for looseness

Steering wheel play
"a": 0 - 30 mm (0 - 1.2 in.)

STEERING FORCE INSPECTION

1) Place vehicle on level road and set steering wheel at straight-ahead position.
2) Check that tire inflation pressure is as specified. (Refer to "TIRE PLACARD" on vehicle.)
3) Remove driver air bag (inflator) module referring to DRIVER AIR BAG (INFLATOR) MODULE in Section 3C.
4) Start engine.
5) With engine idling, measure steering force by turning torque wrench.

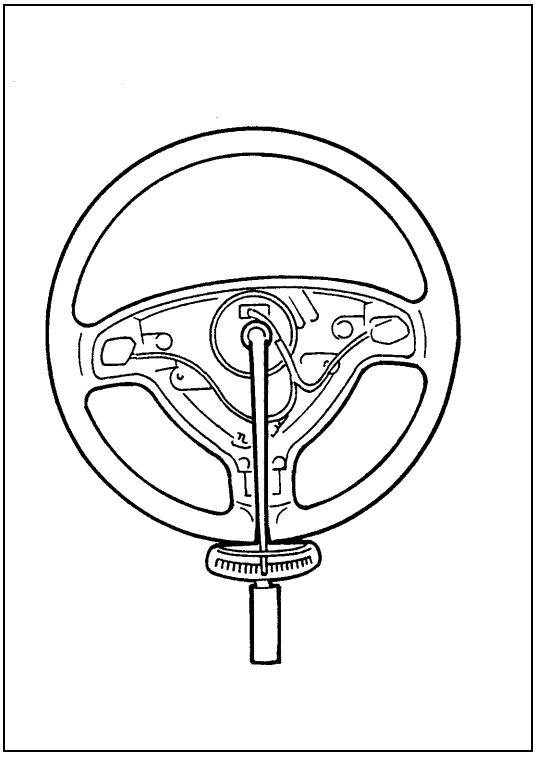

Steering force
: Less than 6.4 N·m (0.64 kg·m, 4.6 lb-ft)

6) Install drive air bag (inflator) module referring to DRIVER AIR BAG (INFLATOR) MODULE in Section 3C.

ON-VEHICLE SERVICE

P/S CONTROL MODULE

REMOVAL

1) Disconnect negative cable at battery.
2) Remove steering column hole cover.

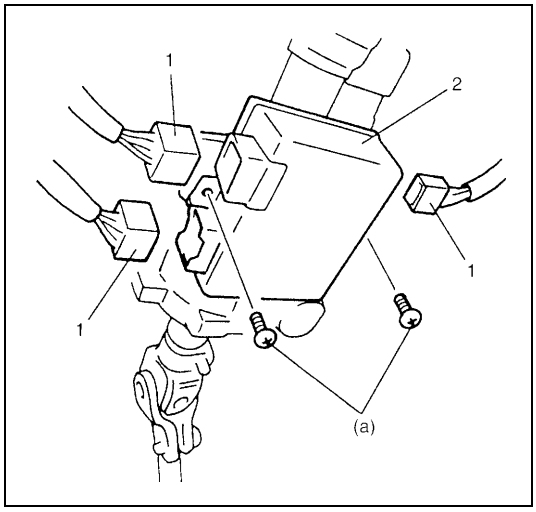

3) Disconnect connectors (1) from P/S control module.
4) Remove P/S control module (2) from steering column assembly.

INSTALLATION

Reverse removal procedure for installation, noting the following.

- Tighten P/S control module screw to specified torque.

Tightening torque
P/S control module screw
(a) : 3 N·m (0.3 kg-m, 2.0 lb-ft)

TORQUE SENSOR

ON-VEHICLE INSPECTION

1) Remove steering column hole cover.
2) Turn ignition switch to ON position.

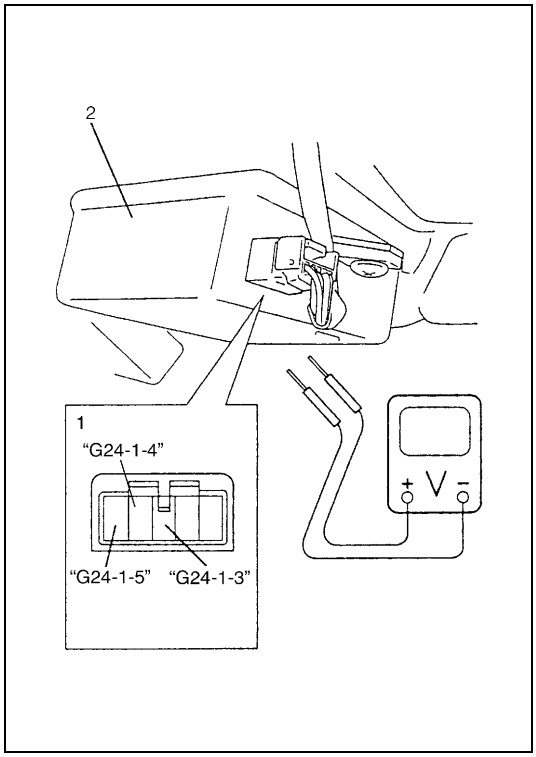

3) Check voltage between terminals of torque sensor connector with connecting it to P/S control module and not running engine.
   If check result is not satisfactory, replace steering column assembly.

Torque sensor specification

	Steering wheel turned fully left	Steering wheel held at position for vehicles torque straight	Steering wheel turned fully right
Main sensor ("G24-1-4" – "G24-1-3")	**1.5 V below**	**About 2.5 V**	**Above 3.5 V**
Sub sensor ("G24-1-5" – "G24-1-3")	**1.5 V below**	**About 2.5 V**	**Above 3.5 V**

MOTOR AND CLUTCH

ON-VEHICLE INSPECTION

1) Remove steering column hole cover.

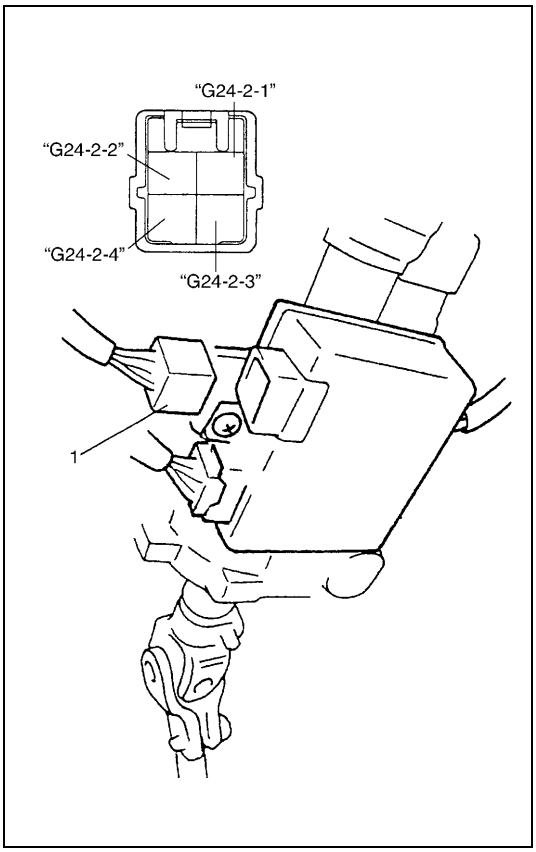

2) Disconnect motor and clutch connector (1) from P/S control module with ignition switch OFF.
3) Check resistance between terminals of motor and clutch connector (1)
   If check result is not as specified above, replace steering column assembly.

Motor and clutch circuit resistance

"G24-2-2" and "G24-2-1" (For motor)	**About 1 Ω**
"G24-2-4" and "G24-2-3" (For clutch)	**About 12 Ω (at 20°C (68°F))**

4) Check continuity between terminal of motor and clutch connector (1) and body ground.
   If check result is not as specified above, replace steering column assembly.

Motor and clutch circuit resistance (to body ground)

"G24-2-4" and body ground	**No continuity**
"G24-2-2" and body ground	**No continuity**

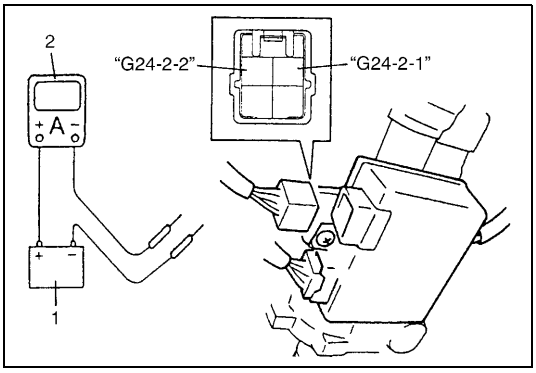

5) Connect battery (1) between "G24-2-2" and "G24-2-1". Check that motor rotates smoothly, then measure current between "G24-2-1" and "G24-2-2" using ammeter (2) as shown in figure.
   If check result is not satisfactory, replace steering column assembly.

Motor and clutch circuit current (reference value)
Standard : About 0.65 A

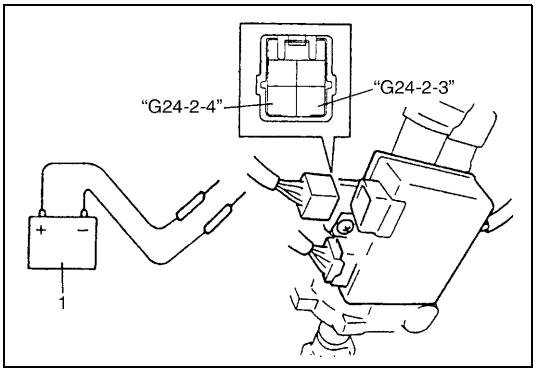

6) Connect battery (1) between "G24-2-4" and "G24-2-3", then check that clutch operation sound is heard.
   If check result is not satisfactory, replace steering column assembly.

STEERING COLUMN ASSEMBLY

Refer to Section 3C for removal and installation of steering column assembly but perform the following step beforehand.

- Disconnect all connectors from P/S control module.

SPECIAL TOOL

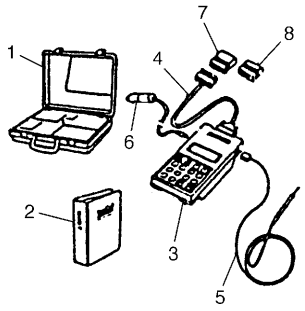	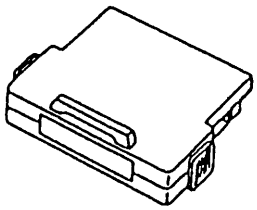	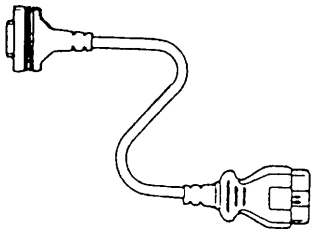
09931-76011 Tech 1A kit See NOTE below.	Mass storage cartridge	09931-76030 16/14 pin DLC cable

NOTE:

This kit includes the following items.

1. Storage case, 2. Operator's manual, 3. Tech 1A, 4. DLC cable, 5. Test lead/probe, 6. Power source cable, 7. DLC cable adapter, 8. Self-test adapter

SECTION 3C

STEERING WHEEL AND COLUMN

WARNING:

For vehicles equipped with Supplemental Restraint (Air Bag) System:

- **Service on and around the air bag system components or wiring must be performed only by an authorized SUZUKI dealer. Please observe all WARNINGS and "Service Precautions" under "On-Vehicle Service" in air bag system section before performing service on or around the air bag system components or wiring. Failure to follow WARNINGS could result in unintentional activation of the system or could render the system inoperative. Either of these two conditions may result in severe injury.**
- **The procedures in this section must be followed in the order listed to temporarily disable the air bag system and prevent false diagnostic codes from setting. Failure to follow procedures could result in possible air bag system activation, personal injury or otherwise unneeded air bag system repairs.**

CAUTION:

When fasteners are removed, always reinstall them at the same location from which they were removed. If a fastener needs to be replaced, use the correct part number fastener for that application. If the correct part number fastener is not available, a fastener of equal size and strength (or stronger) may be used. Fasteners that are not reused, and those requiring thread-locking compound, will be called out. The correct torque value must be used when installing fasteners that require it. If the above procedures are not followed, parts or system damage could result.

CONTENTS

GENERAL DESCRIPTION 3C-2
STEERING COLUMN 3C-2
STEERING WHEEL AND DRIVER AIR BAG (INFLATOR) MODULE 3C-2
DIAGNOSIS 3C-2
INSPECTION AND REPAIR REQUIRED AFTER ACCIDENT 3C-2
ON-VEHICLE SERVICE 3C-3
SERVICE PRECAUTIONS 3C-3
SERVICE AND DIAGNOSIS 3C-3
DISABLING AIR BAG SYSTEM 3C-3
ENABLING AIR BAG SYSTEM 3C-3
HANDLING AND STORAGE 3C-4
DISPOSAL 3C-4
DRIVER AIR BAG (INFLATOR) MODULE .. 3C-4
STEERING WHEEL 3C-6
CENTERING CONTACT COIL 3C-7
CONTACT COIL AND COMBINATION SWITCH ASSEMBLY 3C-8
STEERING COLUMN ASSEMBLY 3C-10
STEERING LOCK ASSEMBLY (IGNITION SWITCH) 3C-16
STEERING LOWER SHAFT 3C-17
CHECKING STEERING COLUMN ASSEMBLY AND LOWER SHAFT FOR ACCIDENT DAMAGE 3C-18
SPECIAL TOOL 3C-19

GENERAL DESCRIPTION

STEERING COLUMN

This double tube type steering column has following three important features in addition to the steering function :

- The column is energy absorbing, designed to compress in a front-end collision.
- The ignition switch and lock are mounted conveniently on this column.
- With the column mounted lock, the ignition and steering operations can be locked to inhibit theft of the vehicle.

To insure the energy absorbing action, it is important that only the specified screws, bolts, and nuts be used as designated and that they are tightened to the specified torque.
When the column assembly is removed from the vehicle, special care must be taken in handling it. Use of a steering wheel puller other than the one recommended in this manual or a sharp blow on the end of the steering shaft, leaning on the assembly, or dropping the assembly could shear the plastic shear pins which maintain column length and position.

STEERING WHEEL AND DRIVER AIR BAG (INFLATOR) MODULE

The driver air bag (inflator) module is one of the supplemental restraint (air bag) system components and is mounted to the center of the steering wheel. During certain frontal crashes, the air bag system supplements the restraint of the driver's and passenger's seat belts by deploying the air bags.
The air bag (inflator) module should be handled with care to prevent accidental deployment. When servicing, be sure to observe all WARNINGS and CAUTIONS and "SERVICE PRECAUTIONS" under "ON-VEHICLE SERVICE" in Section 10B.

DIAGNOSIS

For maintenance service of the steering wheel and column, refer to Section 0B.
For diagnosis of the steering wheel and column, refer to Section 3.
For diagnosis of the air bag system, refer to Section 10B.

INSPECTION AND REPAIR REQUIRED AFTER ACCIDENT

After an accident, whether the air bag has been deployed or not, be sure to perform checks, inspections and repairs described under "CHECKING STEERING COLUMN ASSEMBLY AND LOWER SHAFT FOR ACCIDENT DAMAGE" as well as "REPAIRS AND INSPECTIONS REQUIRED AFTER ACCIDENT" under "DIAGNOSIS" in Section 10B.

ON-VEHICLE SERVICE

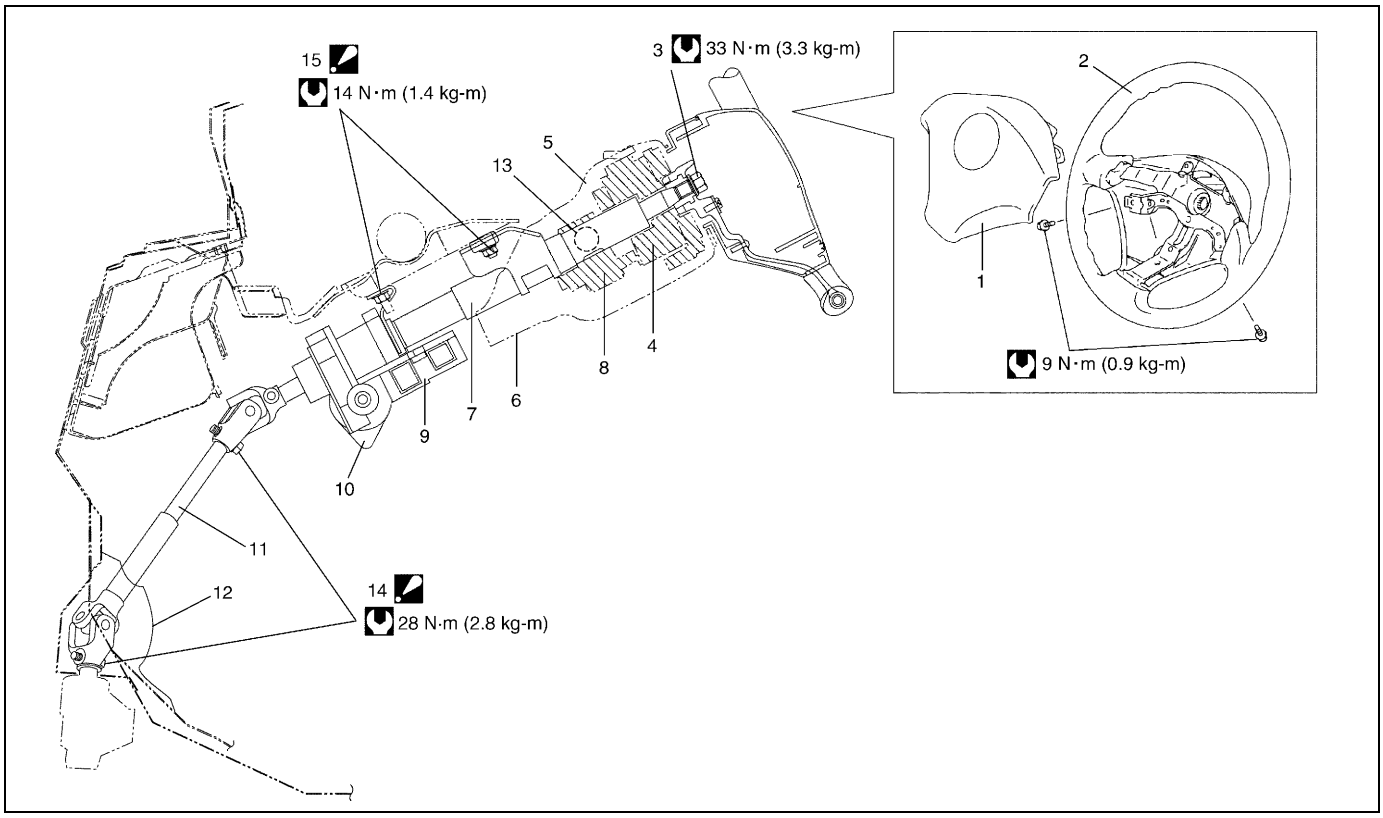

1. Driver air bag (inflator) module	7. Steering column assembly		13. Immobilizer control module (if equipped)
2. Steering wheel	8. Steering lock assembly (ignition switch)		14. Upper and lower joint bolt : After tightening lower joint bolt, tighten upper joint bolt.
3. Steering wheel nut	9. P/S control module (if equipped)		15. Steering column mounting nut : After tightening lower nut, tightening upper nut.
4. Contact coil and combination switch assembly	10. Motor for P/S system (if equipped)		Tightening torque
5. Steering column upper cover	11. Steering lower shaft		
6. Steering column lower cover	12. Steering joint cover		

SERVICE PRECAUTIONS

For service precautions, refer to “SERVICE PRECAUTIONS” under “ON-VEHICLE SERVICE” in Section 10B.

SERVICE AND DIAGNOSIS

For diagnosis and servicing, refer to “SERVICE AND DIAGNOSIS” under “SERVICE PRECAUTIONS” in Section 10B.

DISABLING AIR BAG SYSTEM

For disabling air bag system, refer to “DISABLING AIR BAG SYSTEM” under “SERVICE PRECAUTIONS” in Section 10B.

ENABLING AIR BAG SYSTEM

For enabling air bag system, refer to “ENABLING AIR BAG SYSTEM” under “SERVICE PRECAUTIONS” in Section 10B.

HANDLING AND STORAGE

For handling and storage, refer to “HANDLING AND STORAGE” under “SERVICE PRECAUTIONS” in Section 10B.

DISPOSAL

For disposal, refer to “DISPOSAL” under “SERVICE PRECAUTIONS” in Section 10B.

DRIVER AIR BAG (INFLATOR) MODULE

WARNING:

When handling an air bag (inflator) module, be sure to read “SERVICE PRECAUTIONS” in Section 10B and observe each instruction. Failure to follow them could cause a damage to the air bag (inflator) module or result in personal injury.

REMOVAL

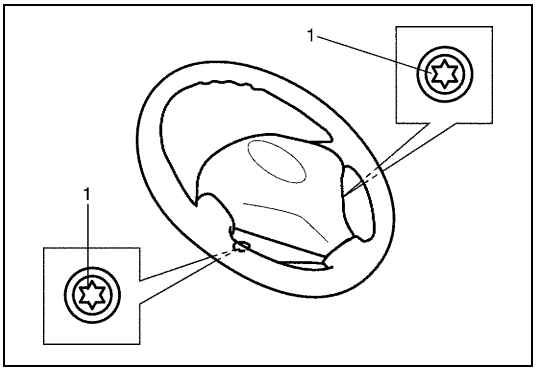

1) Disconnect negative cable at battery.
2) Disable air bag system. Refer to “DISABLING AIR BAG SYSTEM” under “SERVICE PRECAUTIONS” in Section 10B.
3) Loosen 2 bolts (1) mounting driver air bag (inflator) module on its both side.

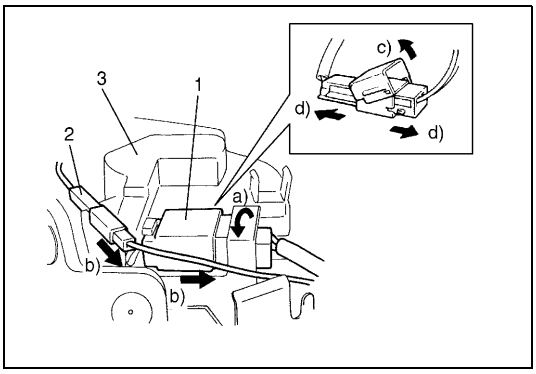

4) Remove driver air bag (inflator) module (3) from steering wheel.
5) Disconnect yellow connector (1) of driver air bag (inflator) module and horn connector (2) in order a) – d) shown in figure.

INSPECTION

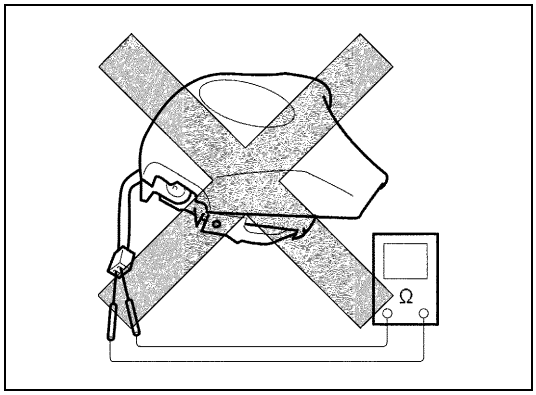

WARNING:
Never disassemble driver air bag (inflator) module or measure its resistance. Otherwise, personal injury may result.

CAUTION:
If air bag (inflator) module was dropped from a height of 90 cm (3 ft) or more, it should be replaced.

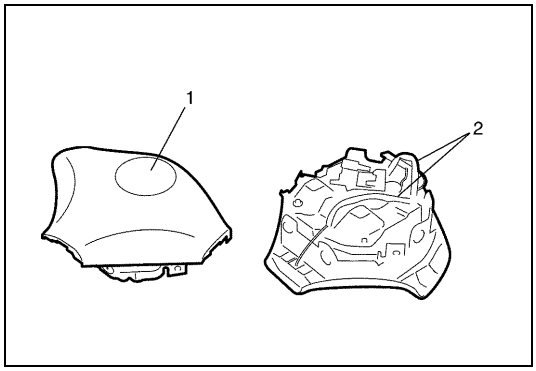

Check air bag (inflator) module visually and if any of the following is found, replace it with a new one.

- Air bag being deployed
- Trim cover (pad surface) (1) being cracked
- Wire harness or connector (2) being damaged
- Air bag (inflator) module being damaged or having been exposed to strong impact (dropped)

INSTALLATION

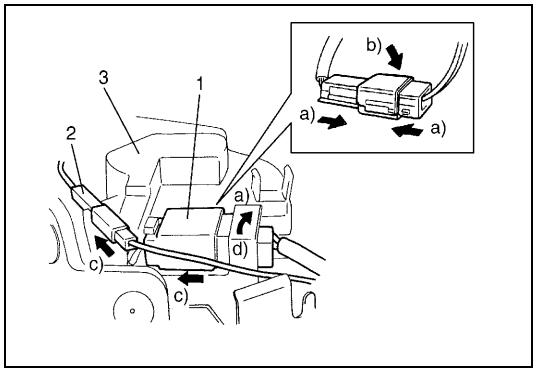

1) Check that horn wire is connected to horn connector (2) securely.
2) Connect yellow connector (1) of driver air bag (inflator) module (3) and horn connector in order a) – d) shown in figure securely.

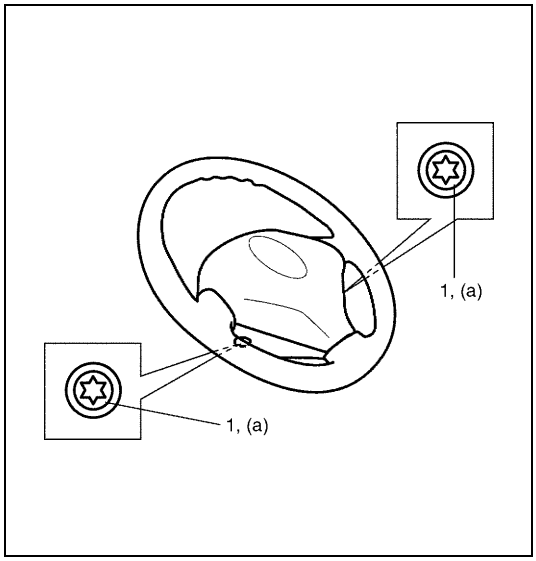

3) Install driver air bag (inflator) module to steering wheel, taking care so that no part of wire harness is caught between them.
4) Make sure that clearance between module and steering wheel is uniform all the way.
5) Tighten driver air bag (inflator) module mounting bolts (1) to specified torque.

Tightening torque
Driver air bag (inflator) module mounting bolt
(a) : 9 N·m (0.9 kg-m, 6.5 lb-ft)

6) Connect negative cable at battery.
7) Enable air bag system. Refer to “ENABLING AIR BAG SYSTEM” under “SERVICE PRECAUTIONS” in Section 10B.

STEERING WHEEL

CAUTION:
Removal of the steering wheel allows the contact coil to turn freely but do not turn the contact coil (on the combination switch) more than allowable number of turns (about two and a half turns from the center position clockwise or counterclockwise respectively), or coil will break.

REMOVAL

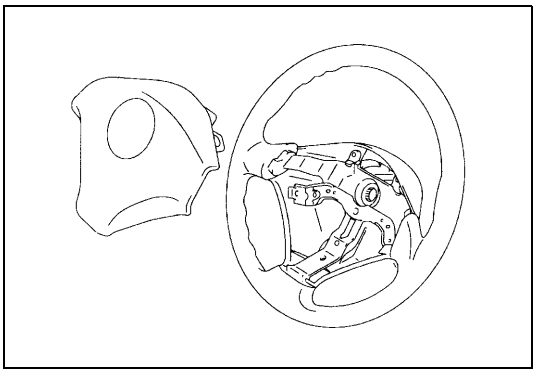

1) Remove driver air bag (inflator) module from steering wheel. Refer to “DRIVER AIR BAG (INFLATOR) MODULE”.

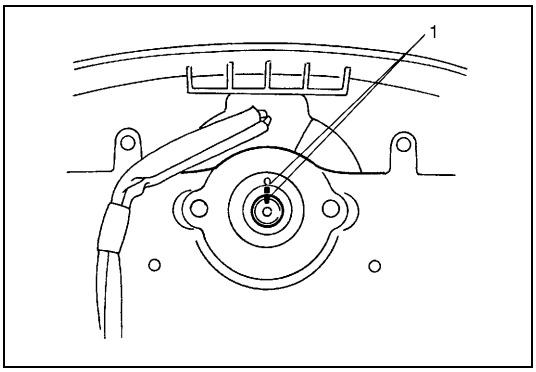

2) Remove steering shaft nut.
3) Make alignment marks (1) on steering wheel and shaft for a guide during reinstallation.

CAUTION:
Do not hammer the end of the shaft. Hammering it will loosen the plastic shear pins which maintain the column length and impair the collapsible design of the column.

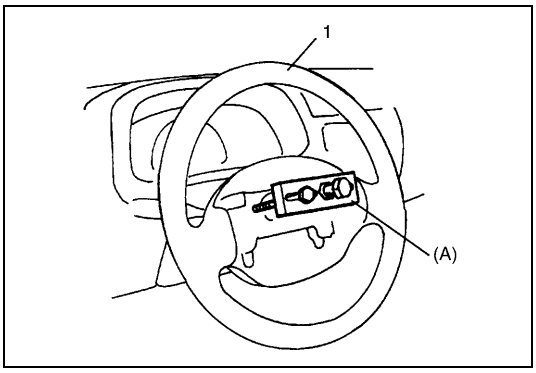

4) Remove steering wheel (1) with special tool.

Special tool
(A) : 09944-36011

INSTALLATION

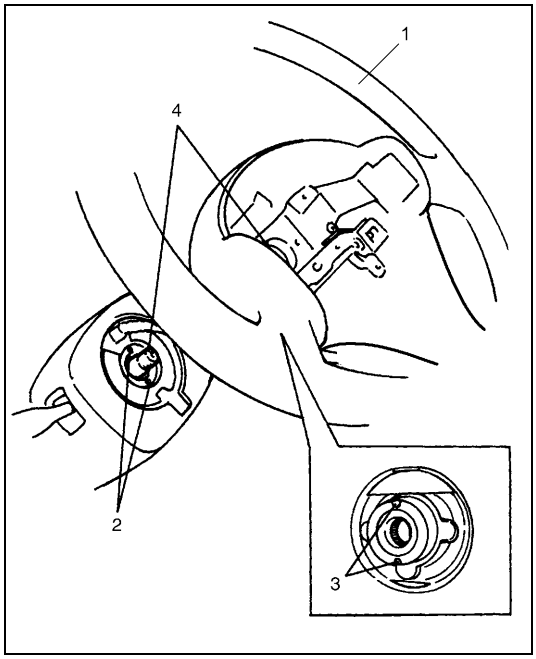

1) Check that vehicle's front tires are at straight-ahead position and contact coil is centered. Refer to "CENTERING CONTACT COIL".

CAUTION:
These two conditions are prerequisite for installation of steering wheel. If steering wheel has been installed without these conditions, contact coil will break when steering wheel is turned.

2) Install steering wheel (1) to steering shaft with 2 lugs (2) on contact coil fitted in two grooves (3) in the back of steering wheel and also aligning marks (4) on steering wheel and steering shaft.

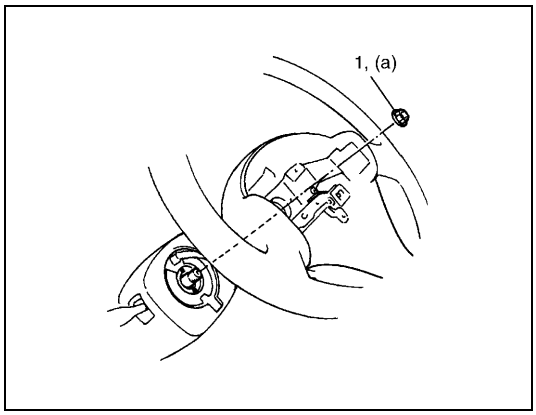

3) Tighten steering shaft nut (1) to specified torque.

Tightening torque
Steering shaft nut (a) : 33 N·m (3.3 kg-m, 24.0 lb-ft)

NOTE:
After installing the steering wheel, turn the steering wheel about 1 full rotation so that the cancel cam pin fits into the pin hole in the steering wheel and then check the turn signal lever for proper function.

4) Install driver air bag (inflator) module to steering wheel. Refer to "DRIVER AIR BAG (INFLATOR) MODULE".

CENTERING CONTACT COIL

1) Check that vehicle's wheels (front tires) are set at straight-ahead position.
2) Check that ignition switch is at "LOCK" position.

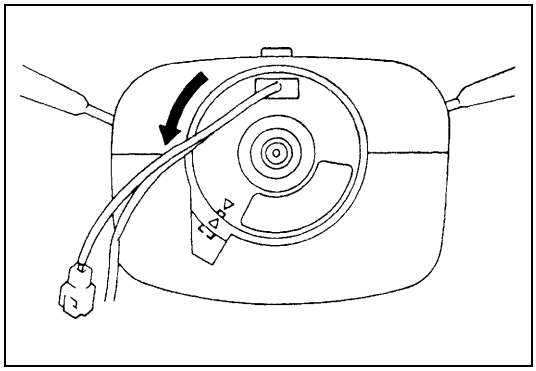

3) Turn contact coil counterclockwise slowly with a light force till contact coil will not turn any further.

NOTE:
Contact coil can turn about 5 turns at maximum, that is, if it is at the center position, can turn about two and a half turns both clockwise and counterclockwise.

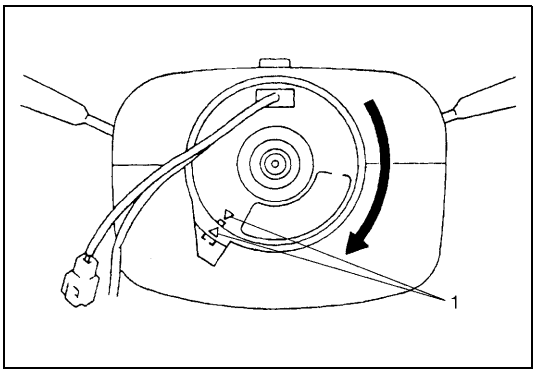

4) From the position where contact coil became unable to turn any further (it stopped), turn it back clockwise about two and a half rotations and align center mark (1) with alignment mark.

CONTACT COIL AND COMBINATION SWITCH ASSEMBLY

CAUTION:
Do not turn contact coil (on combination switch) more than allowable number of turns (about two and a half turns from the center position clockwise or counter-clockwise respectively), or coil will break.

REMOVAL

1) Remove steering wheel from steering column referring to "STEERING WHEEL" in this section.

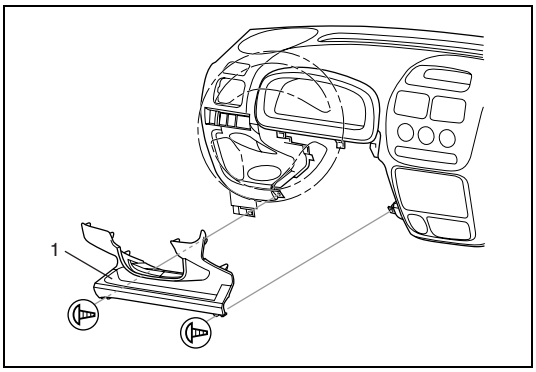

2) Remove steering column hole cover (1).

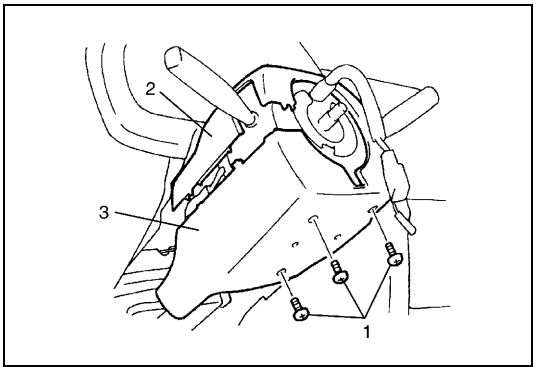

3) Remove steering column cover screws (1).
4) Separate upper cover (2) and lower cover (3), then remove them.

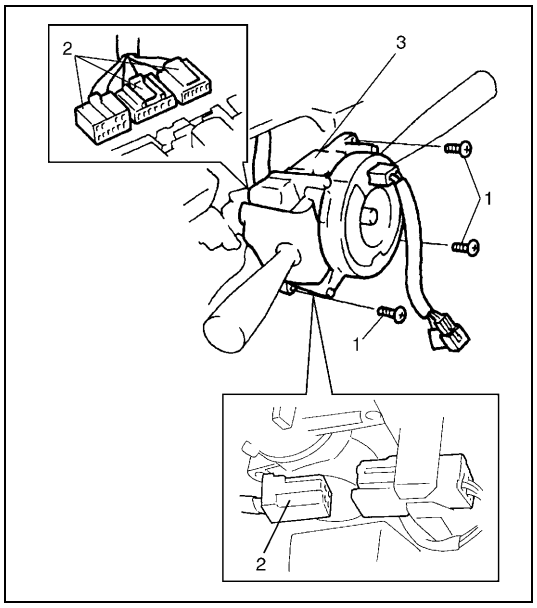

5) Remove contact coil and combination switch assembly screws (1) and disconnect connectors (2) from combination switch (3).

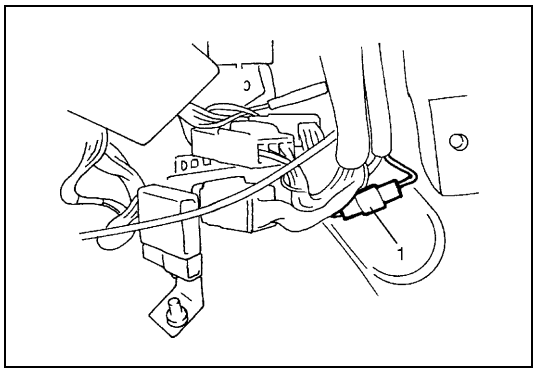

6) Disconnect horn connector (1) from instrument panel harness.

7) Remove contact coil and combination switch assembly from steering column.

INSPECTION

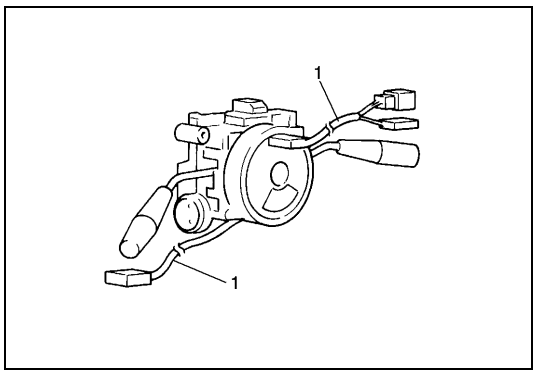

Check contact coil harness (1) for any signs of scorching, melting or other damage.
If it is damaged, replace.

INSTALLATION

1) Check to make sure that vehicle's front tires are set at straight-ahead position and then ignition switch is at "LOCK" position.
2) Connect all connectors disconnected in REMOVAL.

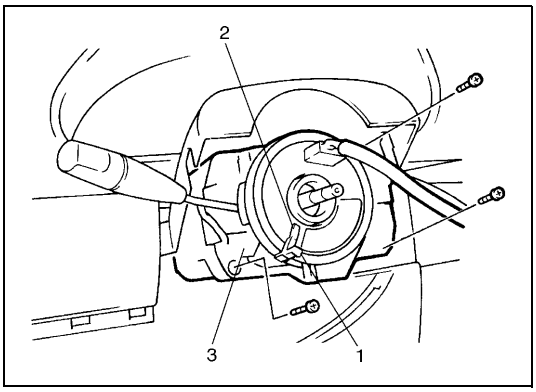

3) Install contact coil and combination switch assembly (3) to steering column.

NOTE:

New contact coil and combination switch assembly is supplied with contact coil set and held at its center position with a lock pin (1) and seal (2). Remove this lock pin after installing contact coil and combination switch assembly to steering column.

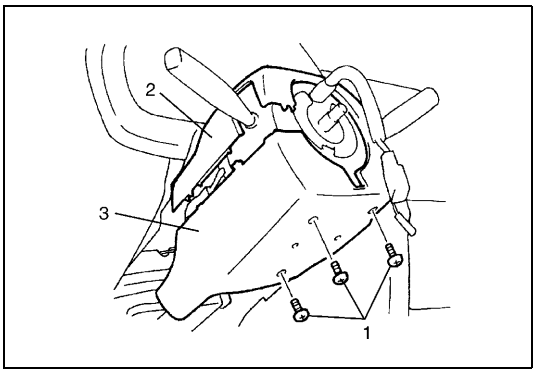

4) Install steering column upper cover (2) and lower cover (3), and then tighten steering column cover screws (1).

CAUTION:

When installing lower cover (3) and upper cover (2), be careful so that contact coil and combination switch lead wire is not caught between covers.

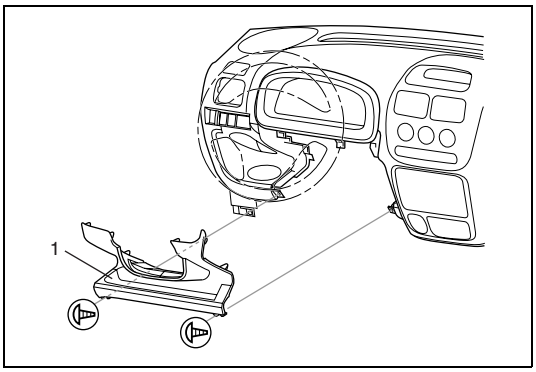

5) Install steering column hole cover (1).
6) Install steering wheel to steering column. Refer to “STEERING WHEEL”.

STEERING COLUMN ASSEMBLY

CAUTION:

Once the steering column is removed from the vehicle, the column is extremely susceptible to damage.

- **Dropping the column assembly on its end could collapse the steering shaft or loosen the plastic shear pins which maintain column length.**
- **Leaning on the column assembly could cause it to bend or deform.**

Any of the above damage could impair the column’s collapsible design.

NOTE:

When servicing steering column or any column-mounted component, remove steering wheel. But when removing steering column simply to gain access to instrument panel components, leave steering wheel installed on steering column.

REMOVAL

WARNING:
Never rest a steering column assembly on the steering wheel with the air bag (inflator) module face down and column vertical. Otherwise, personal injury may result.

1) Disconnect negative cable at battery.
2) Disable air bag system. Refer to “DISABLING AIR BAG SYSTEM” under “SERVICE PRECAUTIONS” in Section 10B.
3) If it is necessary to remove steering wheel and contact coil and combination switch assembly, remove them, referring to “STEERING WHEEL” and “CONTACT COIL AND COMBINATION SWITCH ASSEMBLY”.
   If it is not necessary to remove steering wheel and contact coil and combination switch assembly, perform the following procedure.
   a) Turn steering wheel so that vehicle’s front tires are at straight-ahead position.
   b) Turn ignition switch to “LOCK” position and remove key.

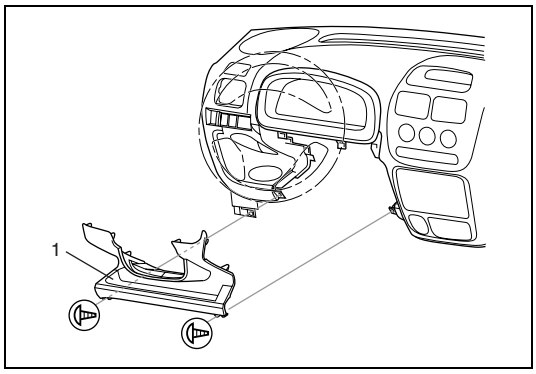

4) Remove steering column hole cover (1).

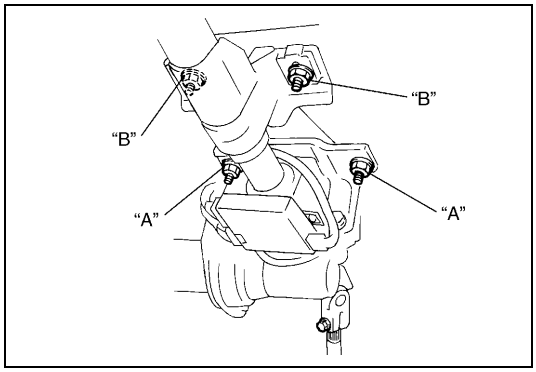

5) Loosen steering column mounting nuts (“A”, “B”).

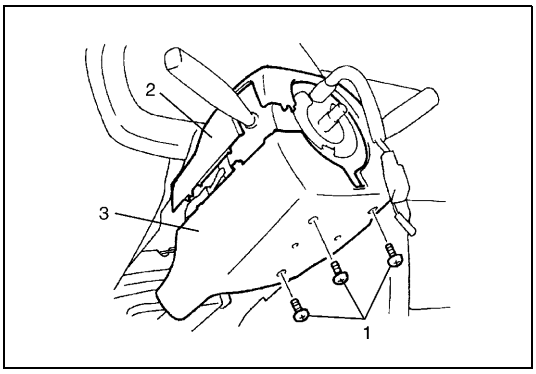

6) Remove steering column cover screws (1).
7) Separate upper column cover (2) and lower column cover (3), then remove them.

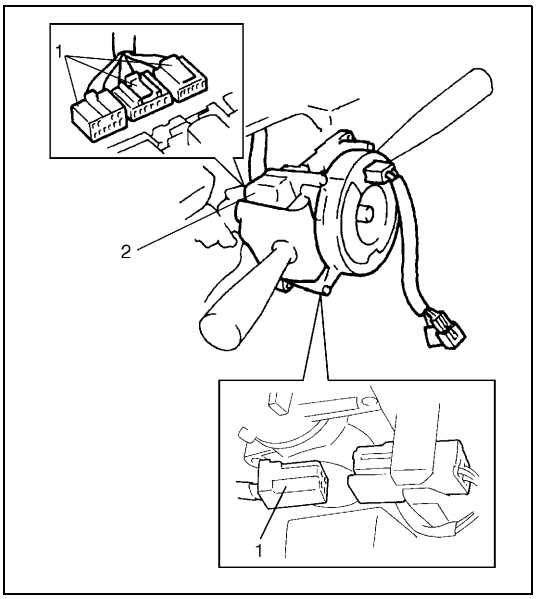

8) Disconnect connectors (1) from combination switch assembly (2).

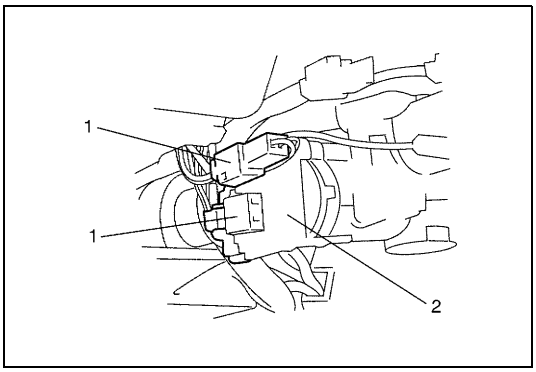

9) Disconnect ignition switch connectors (1) from ignition switch (2).

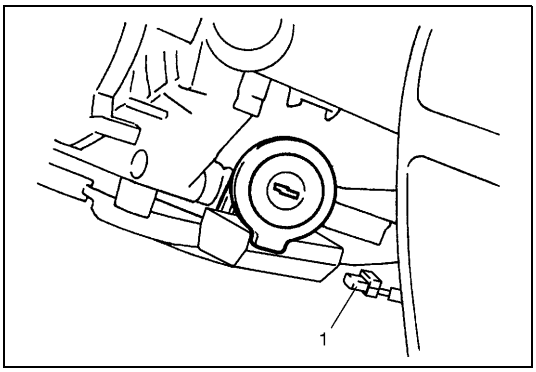

10) Disconnect immobilizer controller connector (1) (if equipped).

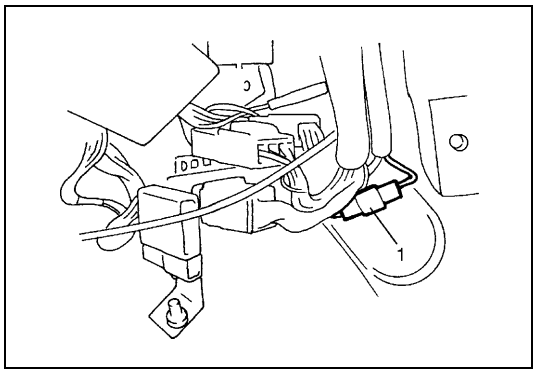

11) Disconnect horn connector (1) from instrument panel harness.

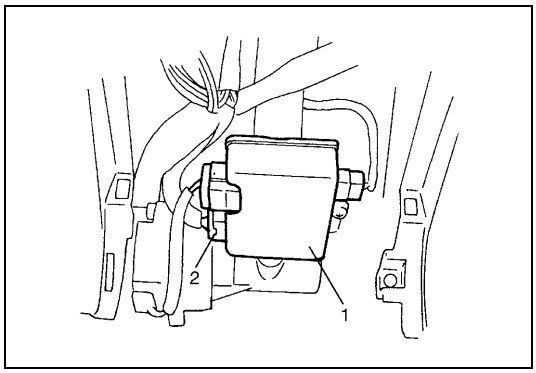

12) If equipped with power steering (P/S) system, disconnect connector (2) from P/S control module (1).

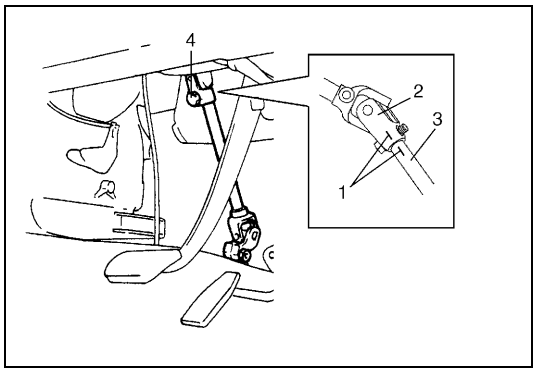

13) Remove steering joint cover.
14) Make alignment marks (1) on joint (2) of steering column and steering lower shaft (3) for a guide during reinstallation.
15) Remove joint bolt (steering column side) (4).

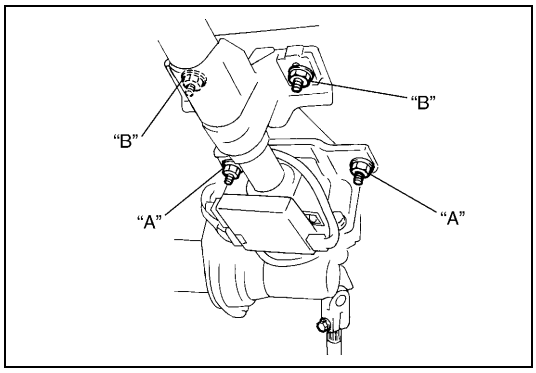

16) Remove steering column mounting nuts ("A", "B").
17) Remove steering column assembly from vehicle.

CAUTION:

Don't separate steering column assembly into steering column and shaft. If column or shaft is defective, replace as an assembly.

18) If it is necessary to remove steering lock assembly (ignition switch), remove it, referring to "STEERING LOCK ASSEMBLY (IGNITION SWITCH)" in this section.

INSPECTION

NOTE:

Vehicles involved in accidents resulting in body damage, where steering column has been impacted (or air bag deployed), may have a damaged or misaligned steering column. For checking procedure of steering column assembly, refer to "CHECKING STEERING COLUMN ASSEMBLY AND LOWER SHAFT FOR ACCIDENT DAMAGE".

INSTALLATION

CAUTION:

After tightening steering column mounting nuts, shaft joint bolts should be tightened. Wrong tightening order above could cause a damage to shaft joint.

1) Be sure that front wheels and steering wheel are in straight forward state.
   If steering lock assembly (ignition switch) is removed, install it, referring to "STEERING LOCK ASSEMBLY (IGNITION SWITCH)" in this section.

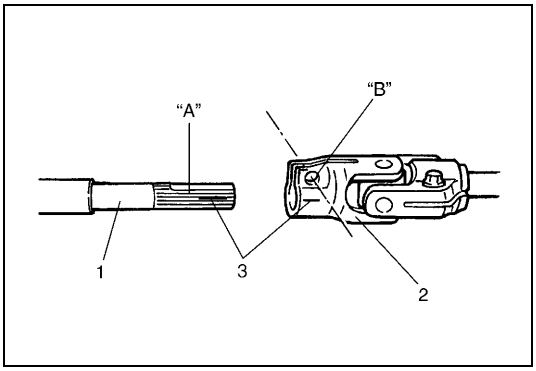

2) Align flat part "A" of steering lower shaft (1) with bolt hole "B" of joint (2) of steering column as shown. Then insert steering lower shaft (1) into shaft joint (2) of steering column with matching marks (3) made before removal.

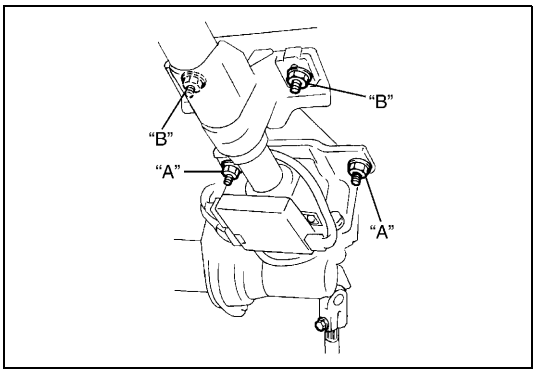

3) Install steering column and tighten steering column mounting nuts ("A", "B") by hand.

4) Connect all connectors disconnected in REMOVAL.
   - Ignition switch
   - Combination switch
   - P/S control module (if equipped)
   - Horn
   - Immobilizer control module (if equipped)

5) If contact coil and combination switch assembly is removed, install it.
   Refer to “CONTACT COIL AND COMBINATION SWITCH ASSEMBLY”.

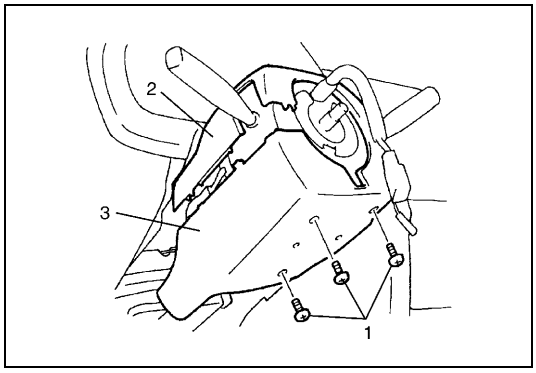

6) Install upper and lower column covers (2 and 3) to steering column assembly by screws (1).

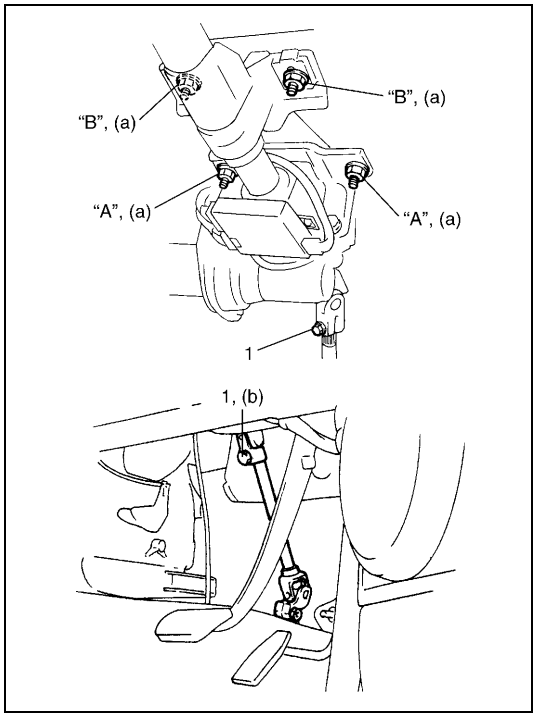

7) Tighten mounting nuts to specified torque in the order “A” – “B” indicated in figure.

   Tightening torque
   Steering column mounting nut
   (a) : 14 N·m (1.4 kg-m, 10.5 lb-ft)

8) Tighten joint bolt (1) (steering column side) to specified torque.

   Tightening torque
   Steering shaft joint bolt (steering column side)
   (b) : 28 N·m (2.8 kg-m, 20.0 lb-ft)

9) Install steering joint cover.

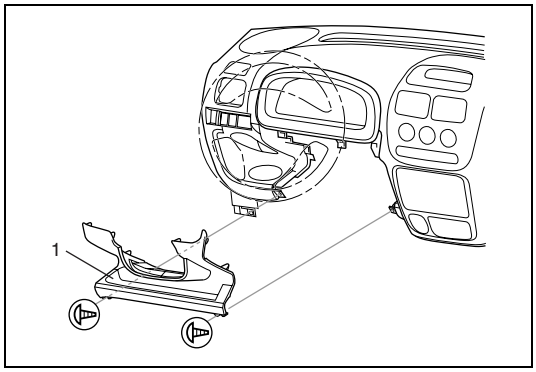

10) Install steering column hole cover (1).

11) If steering wheel is removed, install steering wheel. Refer to “STEERING WHEEL”.
12) Enable air bag system. Refer to “ENABLING AIR BAG SYSTEM” under “SERVICE PRECAUTIONS” in Section 10B.
13) Connect negative cable at battery.

STEERING LOCK ASSEMBLY (IGNITION SWITCH)

REMOVAL

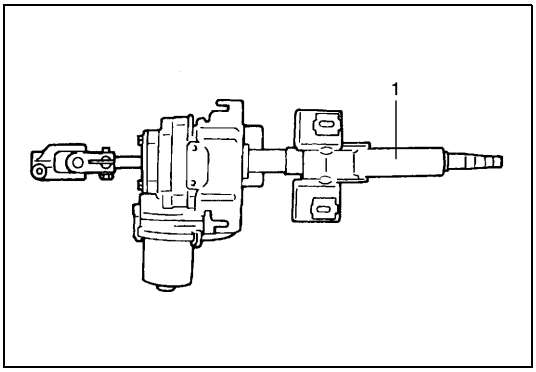

1) Remove steering column (1). Refer to “STEERING COLUMN”.

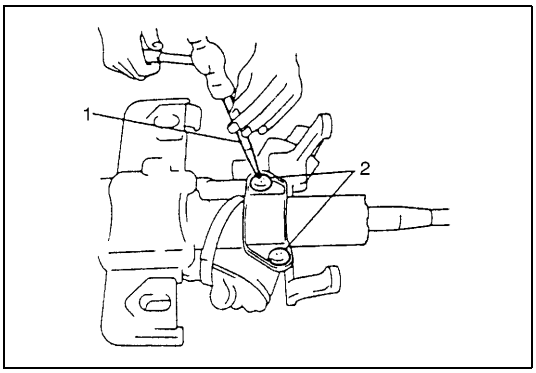

2) Using center punch (1), loosen and remove steering lock mounting bolts (2).

NOTE:

Use care not to damage aluminum part of steering lock body with center punch.

3) Turn ignition key to “ACC” or “ON” position and remove steering lock assembly from steering column.

INSTALLATION

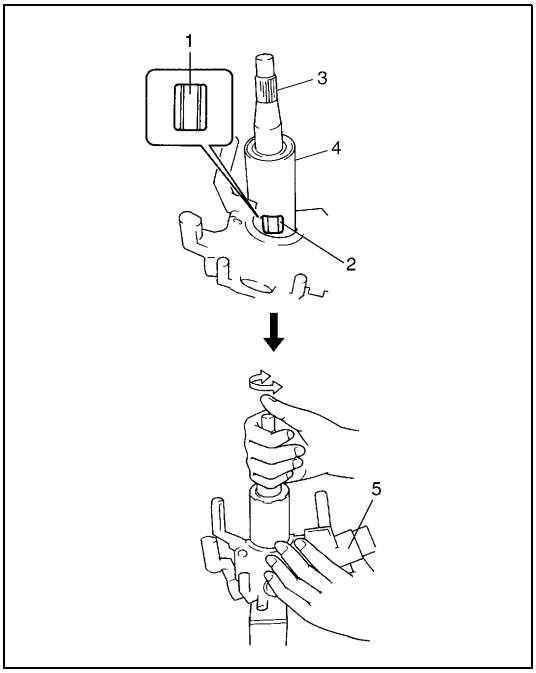

1) Position oblong hole (1) of steering shaft (2) in the center of hole (3) in column (4).
2) Turn ignition key to “ACC” or “ON” position and install steering lock assembly (5) onto column (4).
3) Now turn ignition key to “LOCK” position and pull it out.
4) Align hub on lock with oblong hole (1) of steering shaft (2) and rotate shaft to assure that steering shaft (4) is locked.

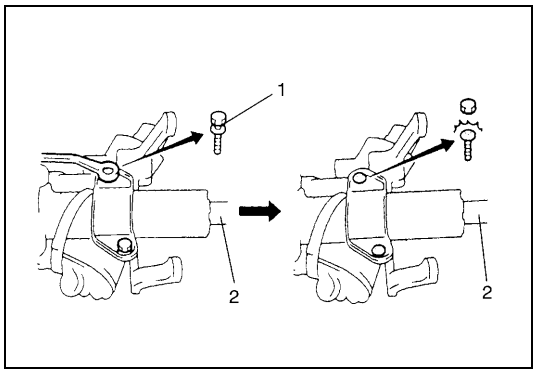

5) Tighten new bolts (1) until head of each bolt is broken off.
6) Turn ignition key to “ACC” or “ON” position and check to be sure that steering shaft (2) rotates smoothly. Also check for lock operation.

7) Install steering column. Refer to “STEERING COLUMN”.

STEERING LOWER SHAFT

CAUTION:
Never turn steering wheel while steering lower shaft is removed.
Should it have been turned and contact coil (on combination switch) have got out of its centered position, it needs to be centered again. Also, turning steering wheel more than about two and a half turns will break contact coil.

REMOVAL

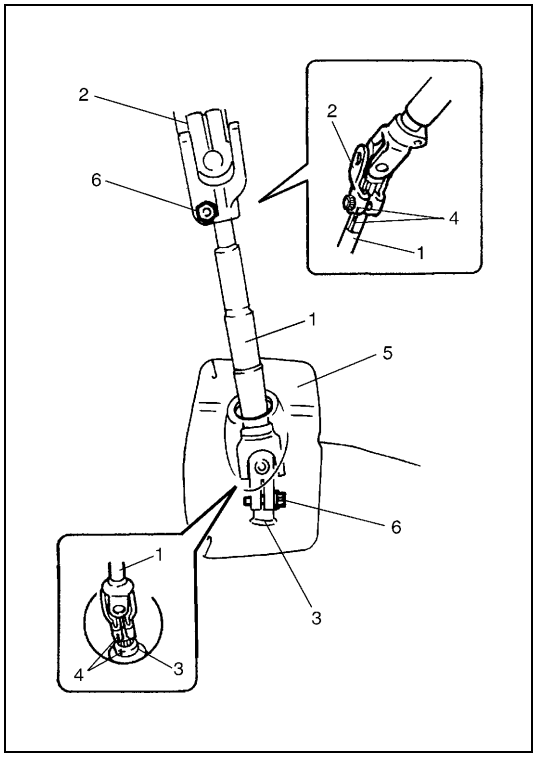

1) Turn steering wheel so that vehicle’s front tires are at straight-ahead position.
2) Turn ignition switch to “LOCK” position and remove key.
3) Remove steering joint cover (5).
4) Make alignment marks (4) on lower shaft (1) and shaft joint of steering column (2) and lower shaft (1) and pinion shaft (3) for a guide during reinstallation.
5) Remove lower shaft joint bolts (6).
6) Remove steering lower shaft (1).

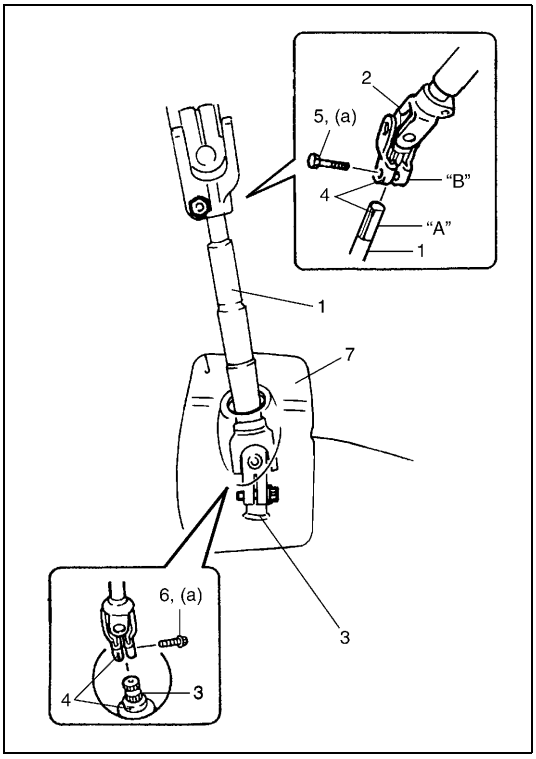

INSTALLATION

1) Be sure that front wheels and steering wheel are in straight forward state.
2) Align flat part "A" of steering lower shaft (1) with bolt hole "B" of shaft joint (2) of column as shown. Then insert lower shaft into shaft joint of steering column with matching marks (4).
3) Insert lower shaft (1) into pinion shaft (3) with matching marks (4).
4) Tighten joint bolt (pinion shaft side) (6) to specified torque first and then joint bolt (steering column side) (5) to specified torque.

   Tightening torque
   Steering shaft joint bolt (a) : 28 N·m (2.8 kg-m, 20.0 lb-ft)

5) Install steering joint cover (7).

CHECKING STEERING COLUMN ASSEMBLY AND LOWER SHAFT FOR ACCIDENT DAMAGE

NOTE:

Vehicles involved in accidents resulting in body damage, where steering column has been impacted (or air bag deployed) may have a damaged or misaligned steering column.

CHECKING PROCEDURE

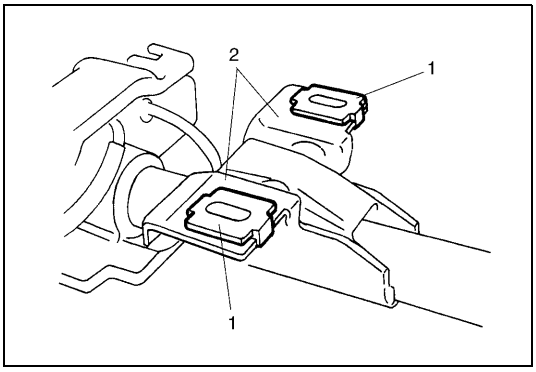

1) Check that each capsule (1) is attached to steering column bracket (2) securely.
   If capsules are loosen, replace steering column assembly.
2) Check two capsules for any damages such as crack or breakage.
   If anything is found faulty, replace as steering column assembly.

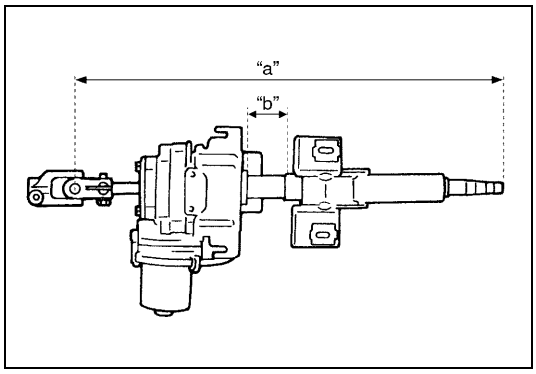

3) Take measurement "a", "b" as shown.
   If it is shorter than specified length, replace column assembly with new one.

Steering shaft and column length
"a" : 518 - 521 mm (20.4 - 20.5 in.)
"b" : 50 mm (1.97 in.)

4) Check steering shaft joints and shaft for any damages such as crack, breakage, malfunction or excessive play.
   If anything is found faulty, replace as lower shaft assembly or column assembly.
5) Check steering shaft for smooth rotation.
   If found defective, replace as column assembly.
6) Check steering shaft and column for bend, cracks or deformation.
   If found defective, replace.

SPECIAL TOOL

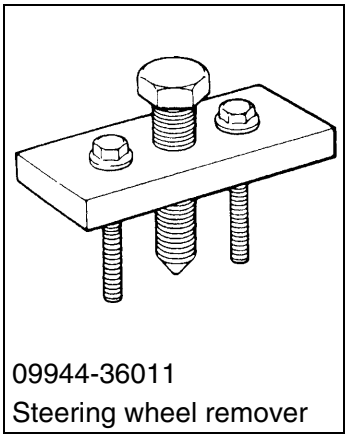

09944-36011
Steering wheel remover

SECTION 3D

FRONT SUSPENSION

NOTE:

- **All front suspension fasteners are an important attaching part in that it could affect the performance of vital parts and systems, and/or could result in major repair expense. They must be replaced with one of the same part number or with an equivalent part if replacement becomes necessary. Do not use a replacement part of lesser quality or substitute design. Torque values must be used as specified during reassembly to assure proper retention of this part.**
- **Never attempt to heat, quench or straighten any front suspension part. Replace it with a new part or damage to the part may result.**

CONTENTS

GENERAL DESCRIPTION 3D-1
DIAGNOSIS 3D-3
STABILIZER BAR AND/OR BUSHING CHECK 3D-3
STRUT ASSEMBLY CHECK 3D-3
SUSPENSION CONTROL ARM / STEERING KNUCKLE CHECK 3D-4
SUSPENSION CONTROL ARM BUSHING CHECK 3D-4
SUSPENSION CONTROL ARM JOINT CHECK 3D-4
FRONT SUSPENSION FASTENERS CHECK 3D-5
WHEEL DISC, NUT AND BEARING CHECK 3D-5
ON-VEHICLE SERVICE 3D-6
STRUT ASSEMBLY 3D-6
STABILIZER BAR AND/OR BUSHINGS 3D-9
WHEEL HUB AND STEERING KNUCKLE 3D-11
SUSPENSION CONTROL ARM / BUSHING 3D-16
REQUIRED SERVICE MATERIAL 3D-19
SPECIAL TOOL 3D-19

GENERAL DESCRIPTION

The front suspension is the strut type independent suspension. The upper end of a strut is anchored to the vehicle body by a strut support. The strut and strut support are isolated by a rubber mount. A strut bearing is also installed a little lower to the rubber mount.

The lower end of the strut is connected to the upper end of a steering knuckle and lower end of knuckle is attached to the stud of a ball joint which is incorporated in a unit with a suspension control arm. And connected to this steering knuckle is the tie rod end.

Thus, movement of the steering wheel is transmitted to the tie rod end and then to the knuckle, eventually causing the wheel-and-tire to move. In this operation, with the movement of the knuckle, the strut also rotates by means of the strut bearing and lower ball joint.

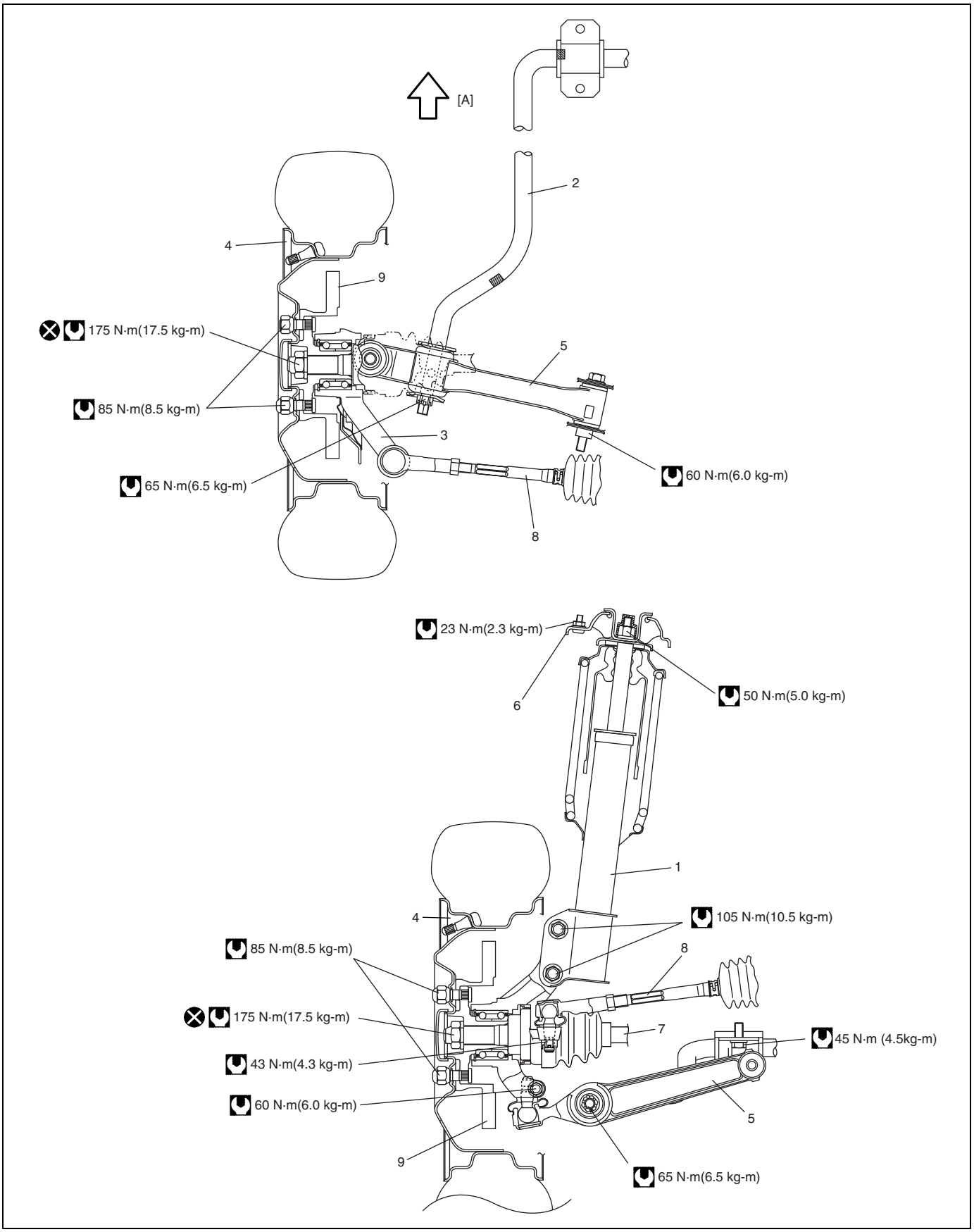

1. Strut assembly	4. Wheel	7. Drive shaft	[A] : FORWARD
2. Stabilizer bar	5. Suspension control arm	8. Tie rod	Tightening torque
3. Steering knuckle	6. Vehicle body	9. Brake disc	Do not reuse.

DIAGNOSIS

STABILIZER BAR AND/OR BUSHING CHECK

Bar

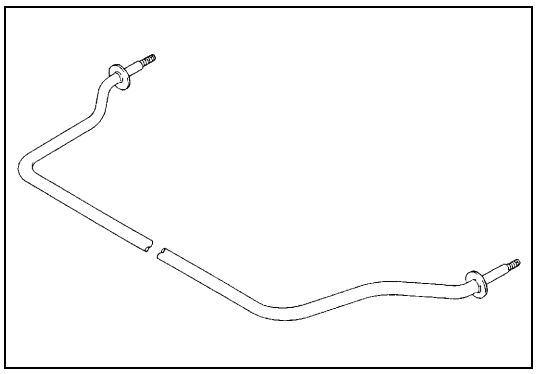

Inspect for damage or deformation.
If defective, replace.

Bushing

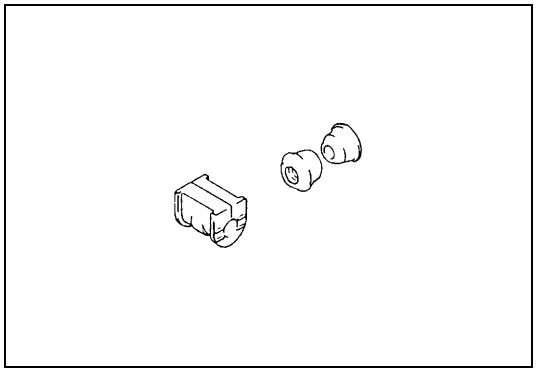

Inspect for damage, wear or deterioration.
If defective, replace.

STRUT ASSEMBLY CHECK

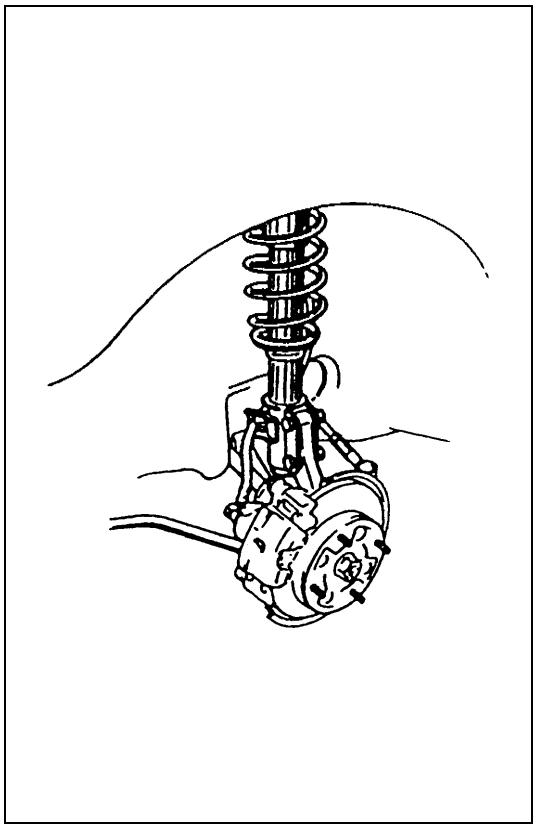

- Inspect strut for oil leakage, damage or deformation.
- If strut is found faulty, replace it as an assembly unit, because it can not be disassembled.
- Inspect strut function refer to the following procedures.

1) Check and adjust tire pressures as specified.
2) Bounce vehicle body 3 or 4 times continuously by pushing front end on the side with strut to be checked.
3) Apply the same amount of force at each push and note strut resistance both when pushed and rebounding.
4) Also, note how many times vehicle body rebounds before coming to stop after hands are off. Do the same for strut on the other side.
5) Compare strut resistance and number of rebalance on the right with those on the left. And they must be equal in both. With proper strut, vehicle body should come to stop the moments hands are off or after only one or two small rebalances.

If conditions of struts are in doubt, compare them with known-good vehicle or strut.

- Inspect bearing for wear, abnormal noise or gripping.
  If defective, replace.

- Inspect spring seat for cracks or deformation.
  If defective, replace.
- Inspect bump stopper for deterioration.
  If defective, replace.
- Inspect rebound stopper and strut mount for wear, cracks or deformation.
  If defective, replace.

SUSPENSION CONTROL ARM / STEERING KNUCKLE CHECK

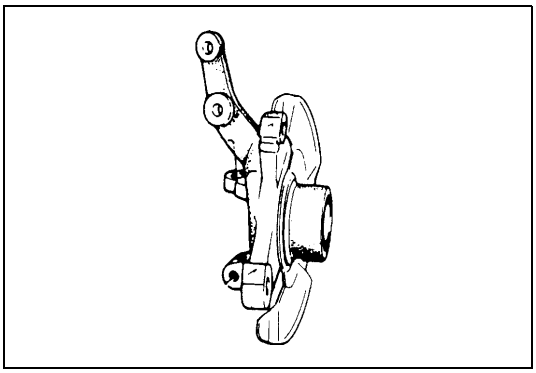

Inspect for cracks, deformation or damage.
If defective, replace.

SUSPENSION CONTROL ARM BUSHING CHECK

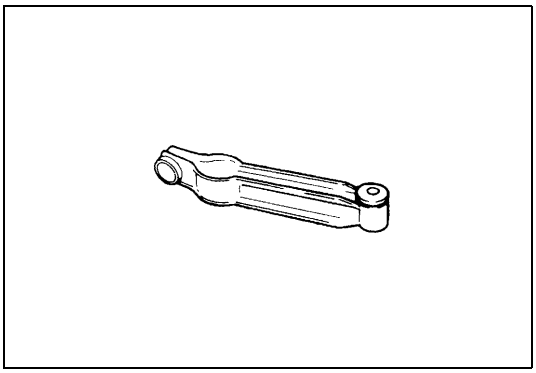

Inspect for damage, wear or deterioration.
If defective, replace.

SUSPENSION CONTROL ARM JOINT CHECK

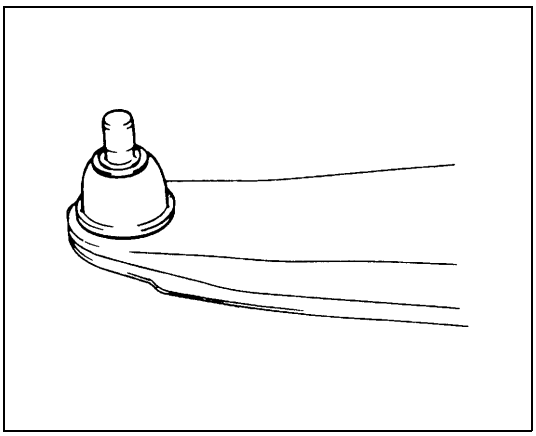

- Check for smooth rotation.
- Inspect ball stud for damage.
- Inspect dust cover for damage.

NOTE:

Suspension control arm and arm joint cannot be separated.

If there is any damage to either, control arm assembly must be replaced as a complete unit.

FRONT SUSPENSION FASTENERS CHECK

Check each bolt and nut fastening suspension parts for tightness. Tighten loose one, if any, to specified torque, referring to “GENERAL DESCRIPTION” in this section.

WHEEL DISC, NUT AND BEARING CHECK

- Inspect each wheel disc for dents, distortion and cracks. A disc in badly damaged condition must be replaced.
- Check wheel nuts for tightness and, as necessary, retighten them to specification.

Tightening torque
Wheel nut (a) : 85 N·m (8.5 kg-m, 61.5 lb-ft)

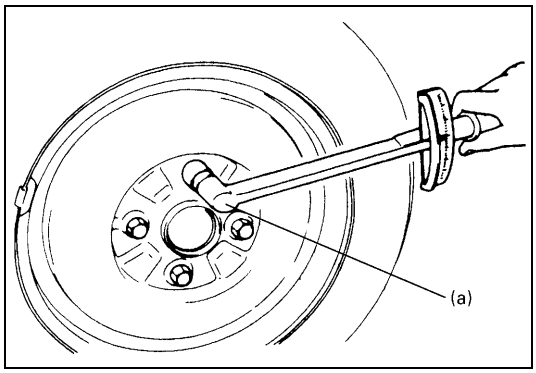

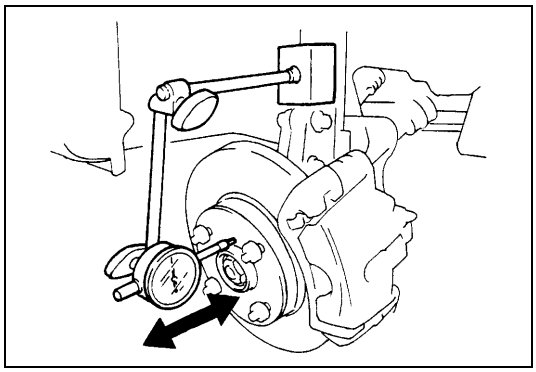

- Check wheel bearing for wear. When measuring thrust play, apply a dial gauge to wheel hub.

Thrust play limit
: 0.1 mm (0.004 in.)

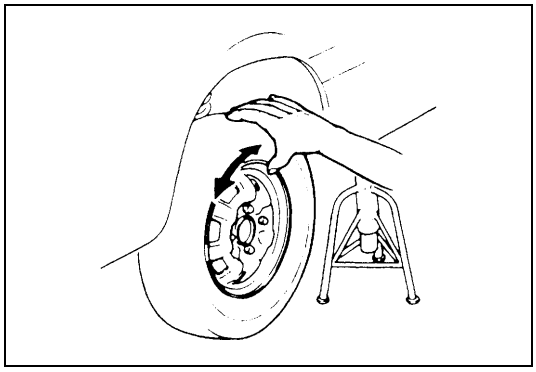

- By rotating wheel actually, check wheel bearing for noise and smooth rotation.
  If defective, replace bearing.

ON-VEHICLE SERVICE

STRUT ASSEMBLY

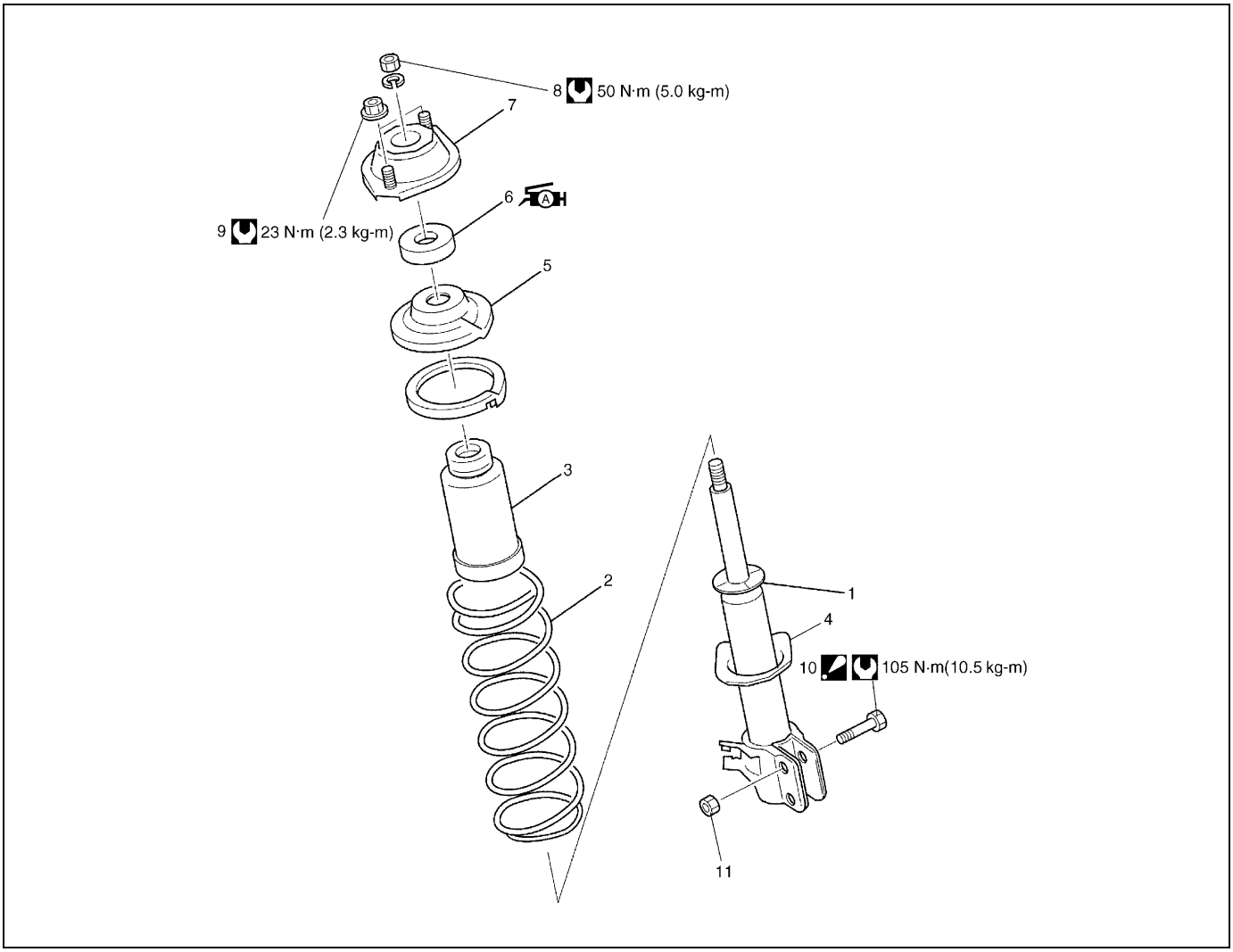

1.	Strut assembly	5.	Coil spring upper seat	9.	Strut support nut
2.	Coil spring	6.	Strut bearing : Apply grease (99000-25010) to all around bearing.	10.	Strut bracket bolt : Insert from vehicle rear side.
3.	Bump stopper	7.	Strut support	11.	Strut bracket nut
4.	Coil spring lower seat	8.	Strut nut		Tightening torque

REMOVAL

1) Hoist vehicle, allowing front suspension to hang free.
2) Remove wheel.

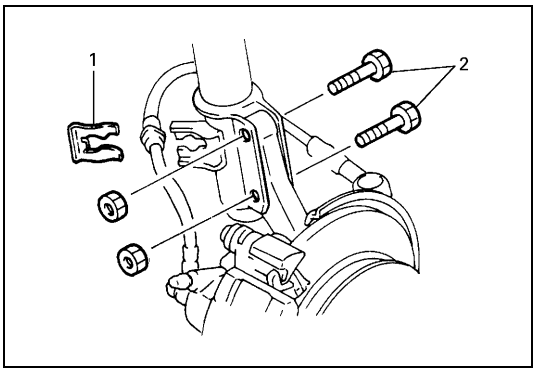

3) Remove E-ring (1) securing brake hose and take brake hose off strut bracket as shown.
4) Remove strut bracket bolts (2).

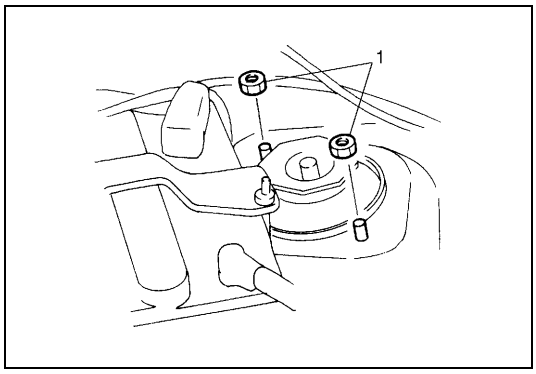

5) Remove strut support nuts (1).

NOTE:
Hold strut by hand so that it will not fall off.

6) Remove strut assembly.

DISASSEMBLY

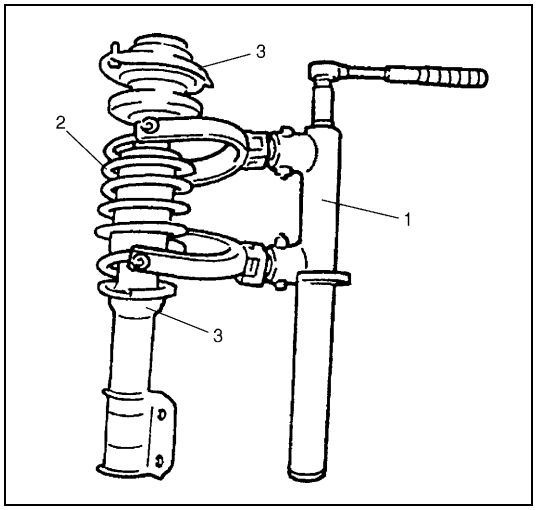

1) Using a spring compressor (1), compress the strut spring (2) till its force pressing the spring seat (3) is released.

WARNING:
Use a commercially available spring compressor (1) and follow the operation procedure described in the Instruction Manual supplied with that spring compressor (1).

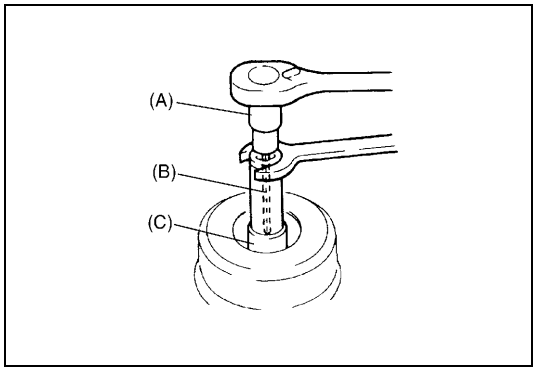

2) Remove strut nut with special tools while coil spring is compressed.

Special tool
(A) : 09900-00411
(B) : 09900-00414
(C) : 09945-26010

3) Disassemble strut assembly.

ASSEMBLY

For assembly, reverse disassembly procedure, noting the following instructions.

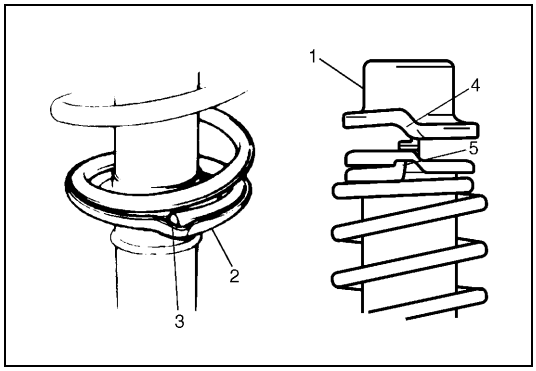

- Mate spring end with stepped part (3) of spring lower seat (2) as shown.
- Install spring upper seat (1), mating stepped part (4) of seat with spring upper end (5) as shown.

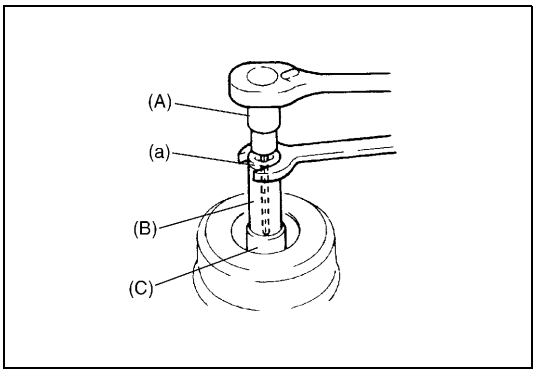

- Tighten strut nut to specified torque by using special tools.

Tightening torque
Strut nut (a) : 50 N·m (5.0 kg-m, 36.5 lb-ft)

Special tool
(A) : 09900-00411
(B) : 09900-00414
(C) : 09945-26010

INSTALLATION

Install strut assembly by reversing removal procedure, noting the following instructions.

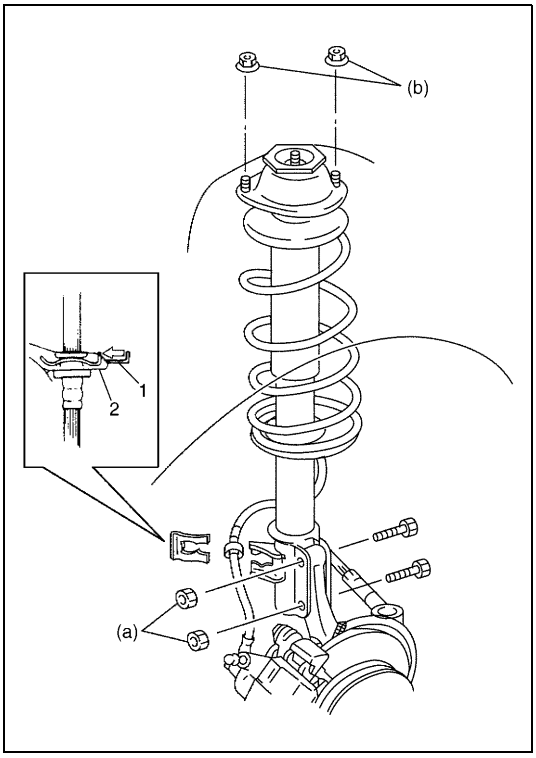

- Insert bolts in such direction as shown in figure.
- Tighten all fasteners to specified torque.

Tightening torque
Strut bracket nut (a) : 105 N·m (10.5 kg-m, 76.0 lb-ft)
Strut support nut (b) : 23 N·m (2.3 kg-m, 17.0 lb-ft)

NOTE:

- **Don't twist brake hose when installing it.**
- **Install E-ring (1) as far as it fits to bracket (2) as shown in figure.**

- Tighten wheel nut to specified torque.

Tightening torque
Wheel nut : 85 N·m (8.5 kg-m, 61.5 lb-ft)

- After installation, confirm front end (wheel) alignment referring to Section 3A.

STABILIZER BAR AND/OR BUSHINGS

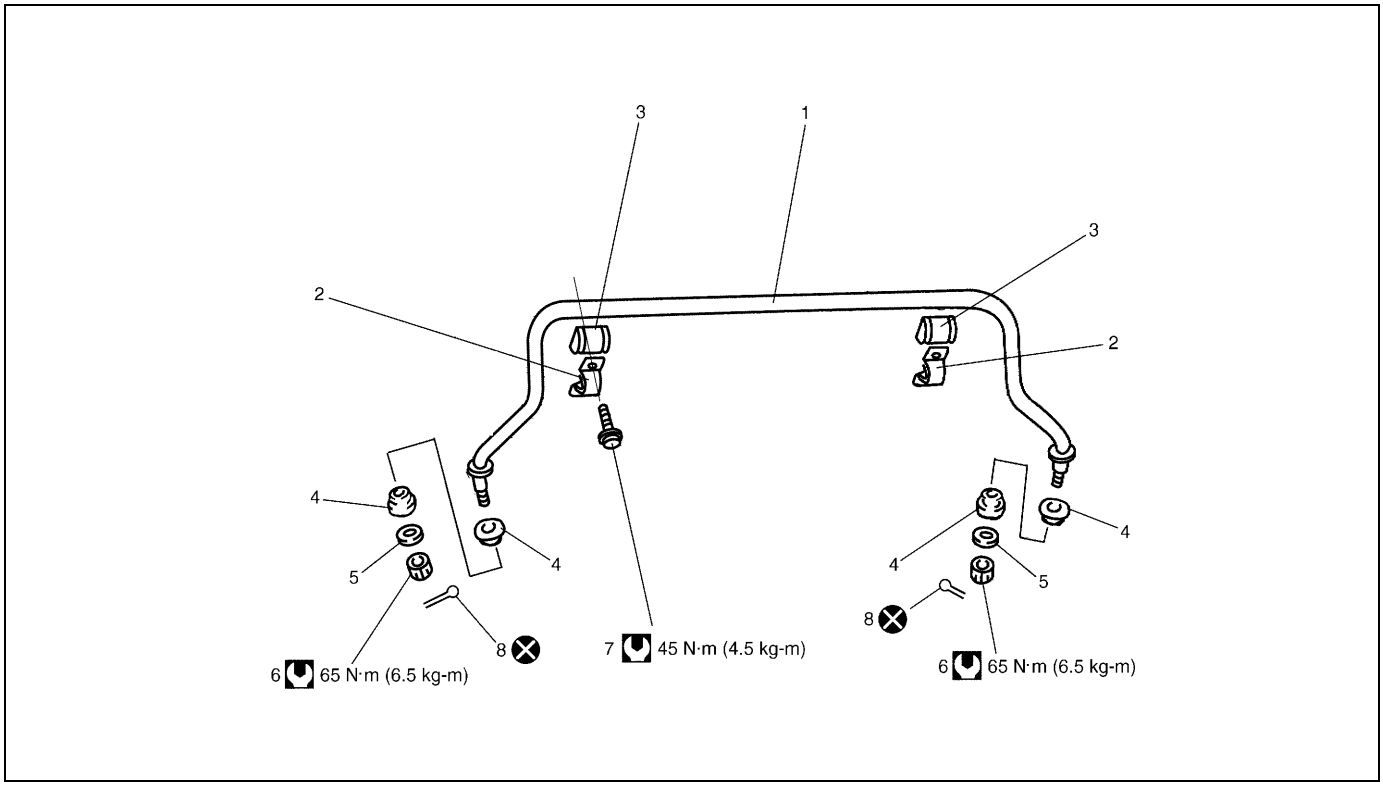

1. Stabilizer bar	4. Bushing	7. Stabilizer bar mounting bracket bolt	Tightening torque
2. Mount bracket	5. Washer	8. Sprit pin	Do not reuse.
3. Mount bushing	6. Stabilizer bar nut		

REMOVAL

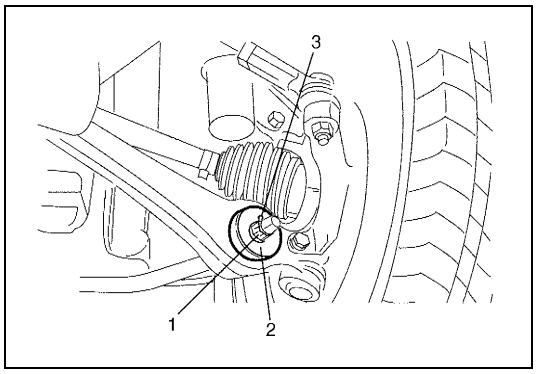

1) Hoist vehicle and allow front suspension control arms to hang free.
2) Remove front wheels.
3) Remove, stabilizer bar sprit pin (3) and nut (1) and washer (2).

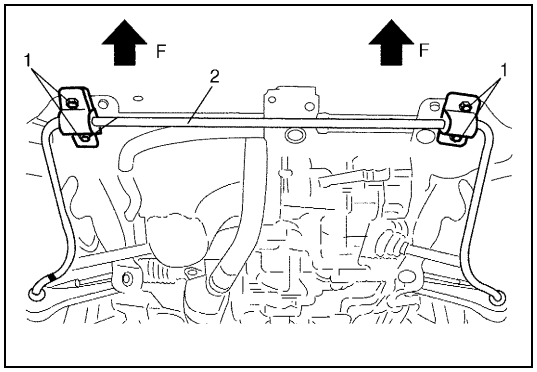

4) Remove stabilizer bar mounting bracket bolts (1).
5) Remove stabilizer bar (2).

NOTE:

If it is hard to remove stabilizer bar, set tires in contact with ground (with suspension compressed).

F. FORWARD

INSTALLATION

For installation, reverse removal procedure, noting the following instructions.

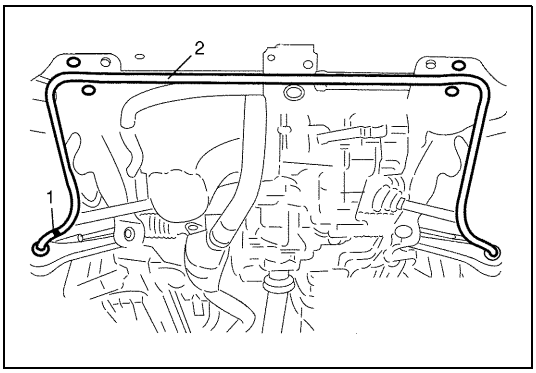

- Install stabilizer bar (2) so that paint mark (1) on it comes to the right side of vehicle.

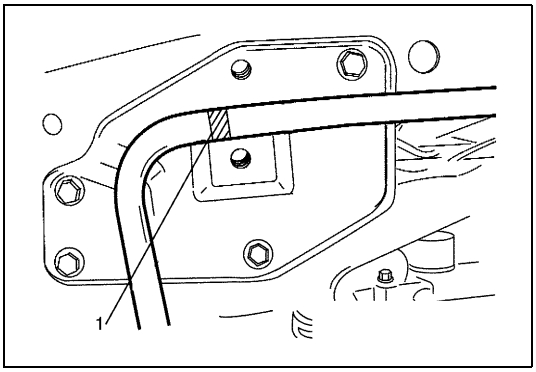

- There is a paint mark (1) of stabilizer bar. Install stabilizer bar mount bracket to inside of stabilizer bar at that mark.

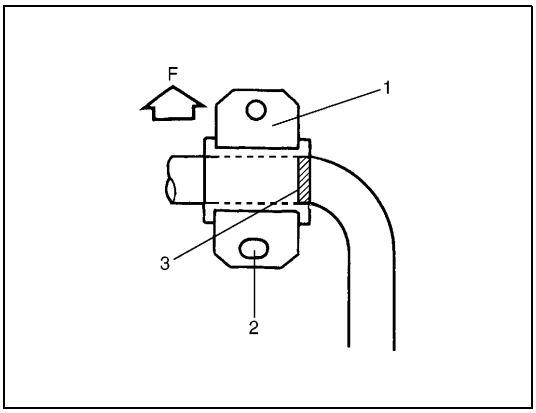

- Install mount bracket (1) so that its oblong hole side (2) comes to the rear.

3. Mark
F: Forward

- Tighten stabilizer bar mounting bracket bolts to specified torque.

Tightening torque
Stabilizer bar mounting bracket bolt
: 45 N·m (4.5 kg-m, 32.5 lb-ft)

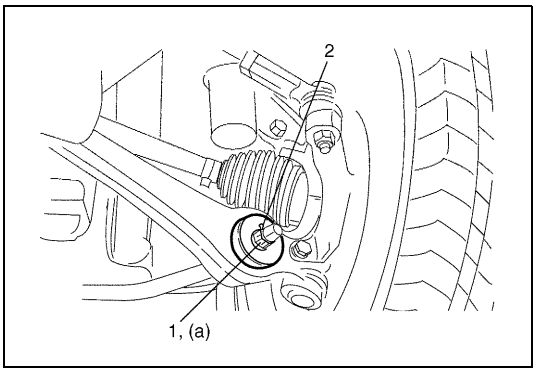

- Tighten stabilizer bar nut (1) to specified torque.

Tightening torque
Stabilizer bar nut (a) : 65 N·m (6.5 kg-m, 47.0 lb-ft)

- Install new sprit pin (2).
- Tighten wheel nut to specified torque.

Tightening torque
Wheel nut : 85 N·m (8.5 kg-m, 61.5 lb-ft)

WHEEL HUB AND STEERING KNUCKLE

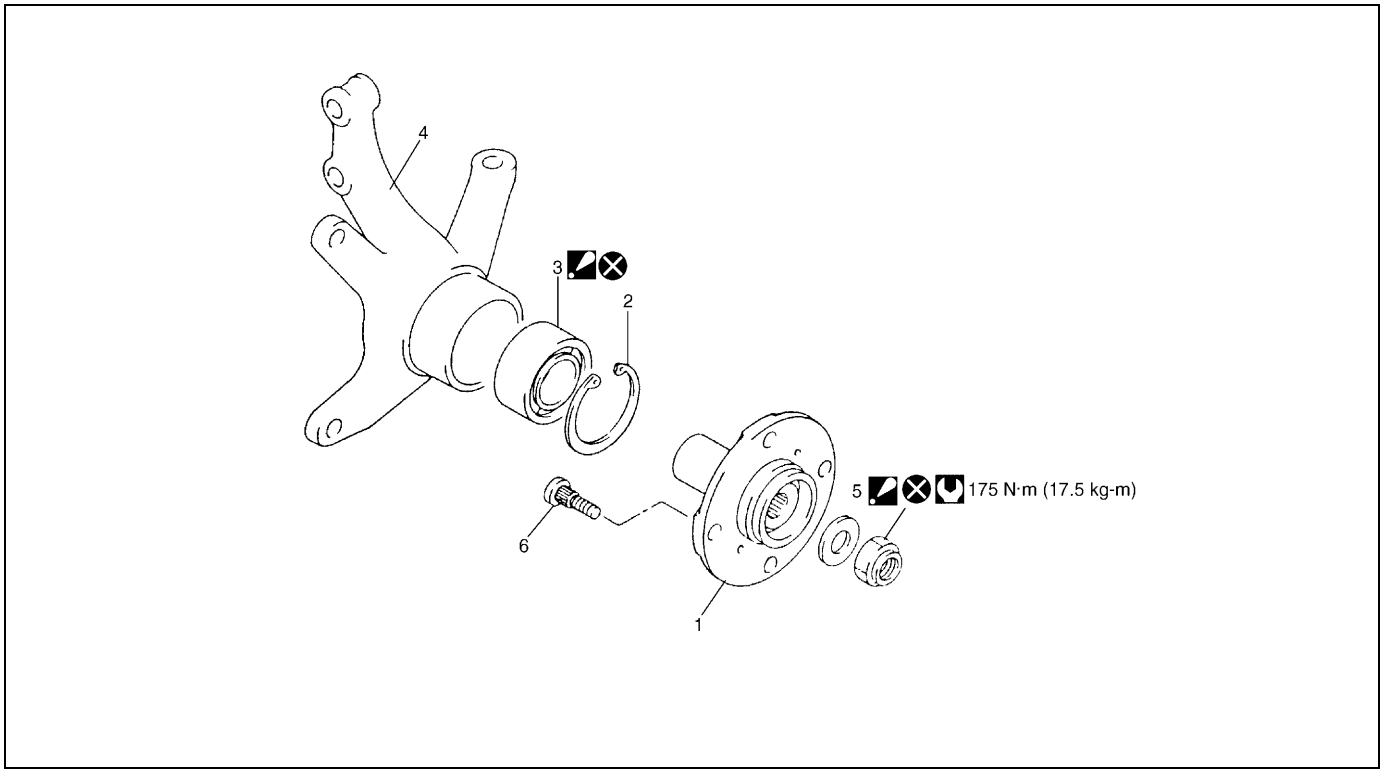

	1. Front wheel hub		4. Steering knuckle		Tightening torque
	2. Circlip		5. Drive shaft nut : Calk, after tightening.		Do not reuse.
	3. Wheel bearing : Face grooved rubber seal side to wheel hub.		6. Hub bolt		

REMOVAL

1) Hoist vehicle and remove wheel.

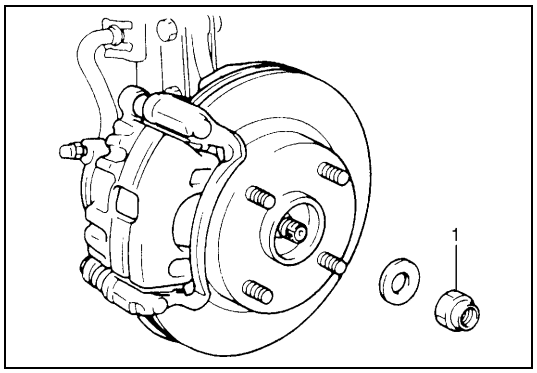

2) Uncaulk drive shaft nut (1).
3) Depress foot brake pedal and hold it there. Remove drive shaft nut (1).
4) Remove caliper carrier bolts.

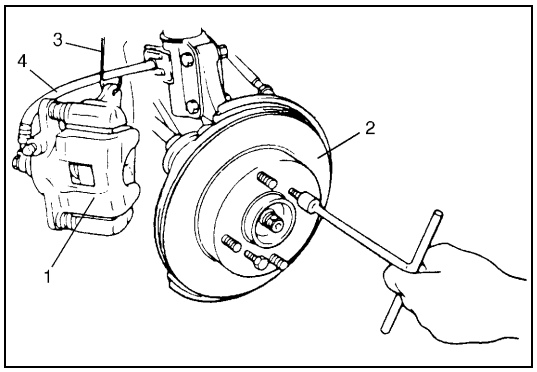

5) Remove caliper (1) with carrier.

NOTE:

Hang removed caliper with a wire hook or the like (3) so as to prevent brake hose (4) from bending and twisting excessively or being pulled.
Don't operate brake pedal with pads removed.

6) Pull brake disc (2) off by using two 8 mm bolts.

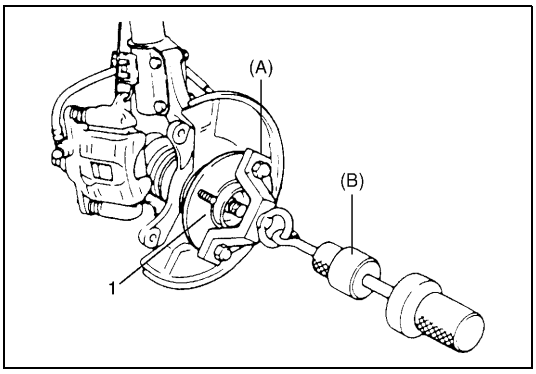

7) Pull out wheel hub (1) with special tools.

Special tool
(A) : 09943-17912
(B) : 09942-15510

CAUTION:
When wheel hub is removed, replace wheel bearing as a set.

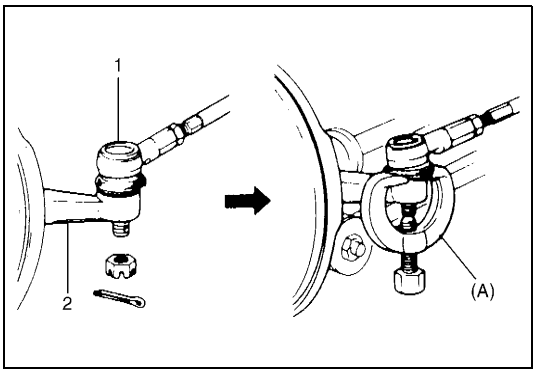

8) Disconnect tie rod end (1) from steering knuckle (2) with special tool.

Special tool
(A) : 09913-65210

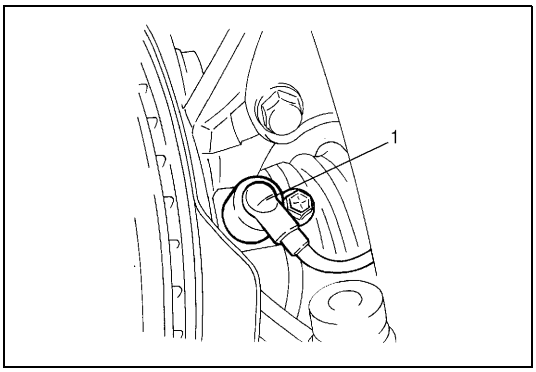

9) Remove wheel speed sensor (1) from knuckle (if equipped with ABS).

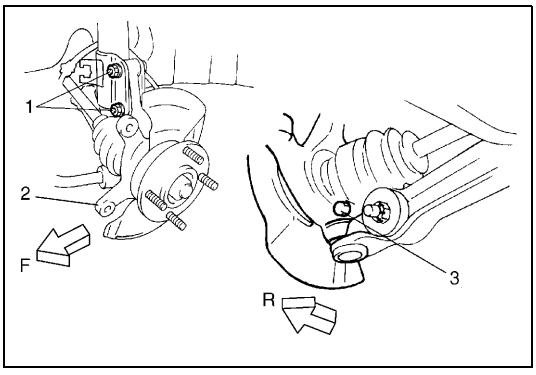

10) Loosen strut bracket nuts (1).

F:	Forward
R:	Rearward

11) Remove ball joint bolt (3).
12) Remove strut bracket bolts from strut bracket and then steering knuckle (2).

DISASSEMBLY

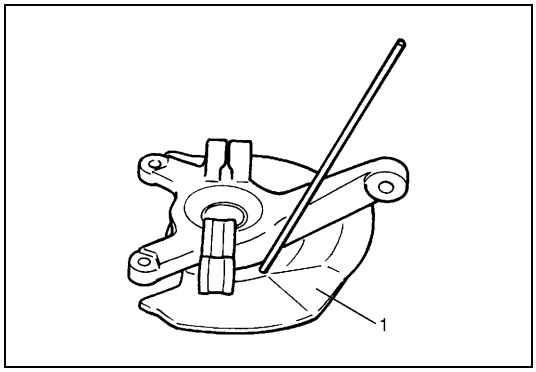

1) Uncaulk and remove dust cover (1).
2) Remove circlip.

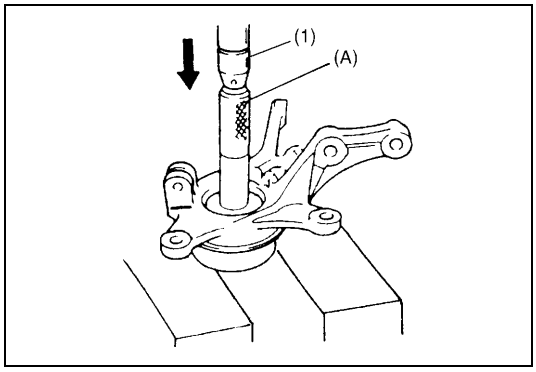

3) Using hydraulic press (1) and special tool, remove wheel bearing.

Special tool
(A) : 09913-75810

CAUTION:
When installing wheel bearing, replace it with new one.

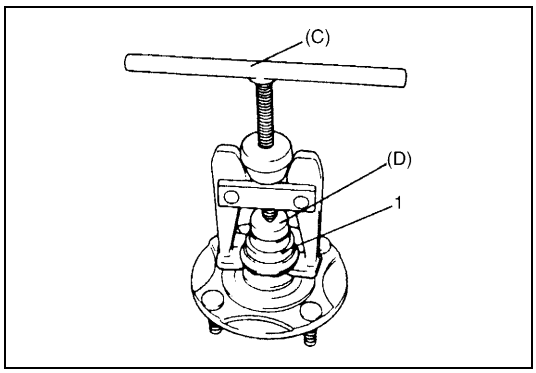

4) Remove wheel bearing outside inner race (1).

Special tool
(C) : 09913-61110
(D) : 09925-88210

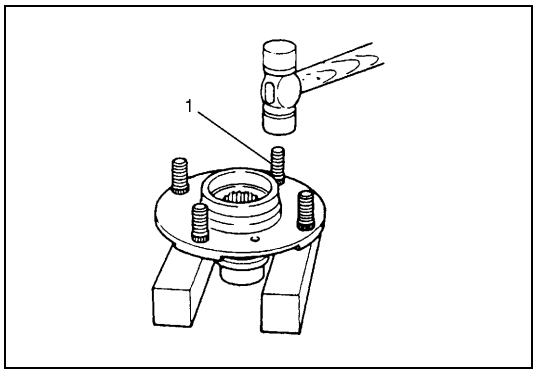

5) Remove hub bolts (1).

CAUTION:
Never remove bolt unless replacement is necessary.
Be sure to use a new bolt for replacement.

ASSEMBLY

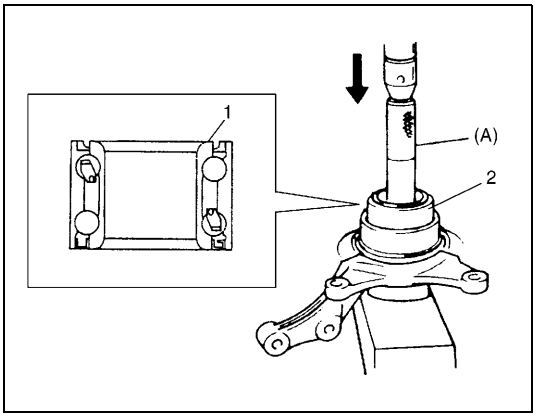

1) Face grooved rubber seal side (1) of new wheel bearing (2) upward as shown in figure and press-fit it into knuckle using special tool.

Special tool
(A) : 09913-75520

CAUTION:
When replacing bearing, inner races or outer race, be sure to replace them with new ones as a set.

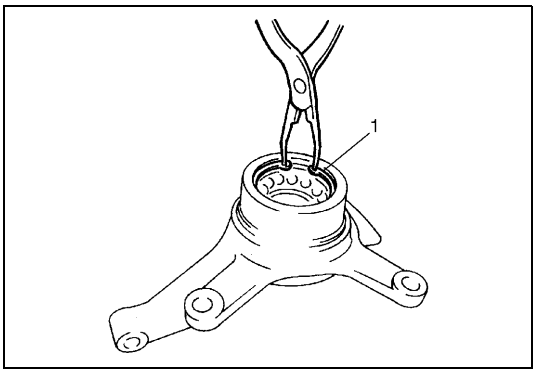

2) Install circlip (1).

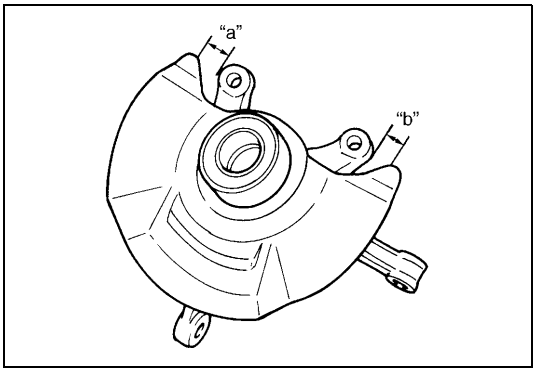

3) Drive in dust cover so that dimensions "a" and "b" become equal as shown in figure.

CAUTION:
When drive in dust cover, be careful not to deform it.

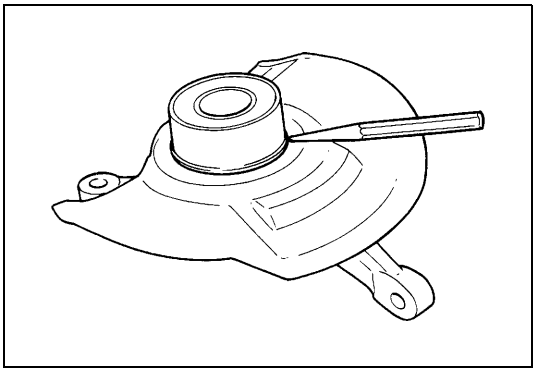

4) Caulk with a punch.

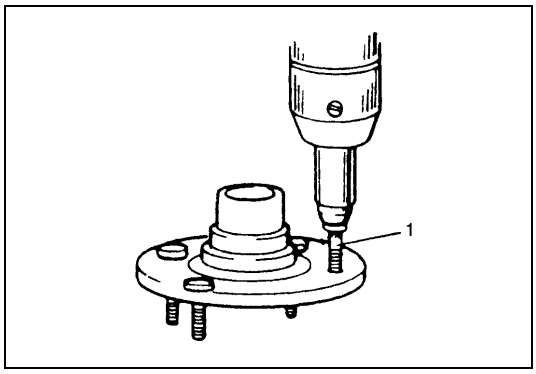

5) Insert new stud bolt (1) in hub hole. Rotate stud bolt slowly to assure that serrations are aligned with those made by original bolt.

INSTALLATION

For installation, reverse removal procedure, noting the following instructions.

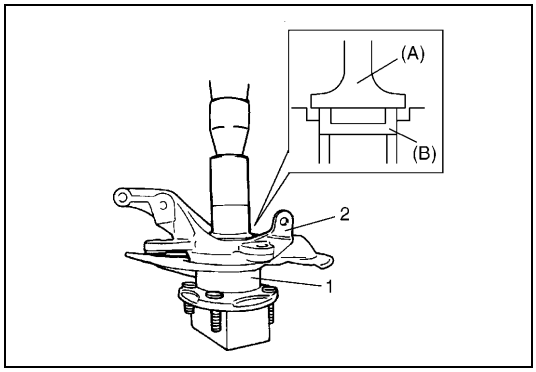

- Using special tool, drive wheel hub (1) into steering knuckle (2) and then install steering knuckle (2).

Special tool
(A) : 09913-75520
(B) : 09944-66020

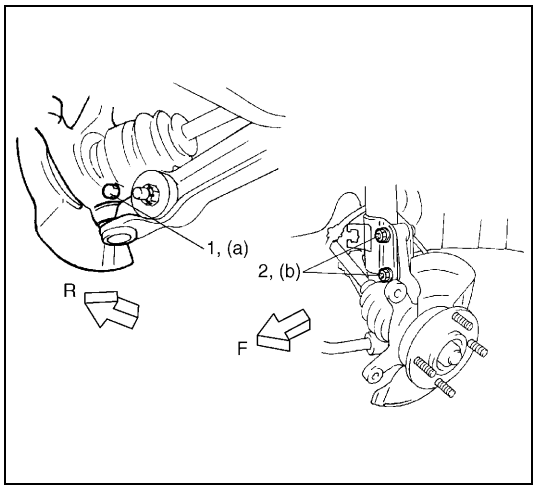

- Install ball joint bolt (1) from the direction as shown.
- Tighten suspension arm ball joint bolt (1) to specified torque.

Tightening torque
Suspension arm ball joint bolt
(a) : 60 N·m (6.0 kg-m, 43.5 lb-ft)

- Tighten strut bracket nuts (2) to specified torque.

Tightening torque
Strut bracket bolt (b) : 105 N·m (10.5 kg-m, 76.0 lb-ft)

F: Forward
R: Rearward

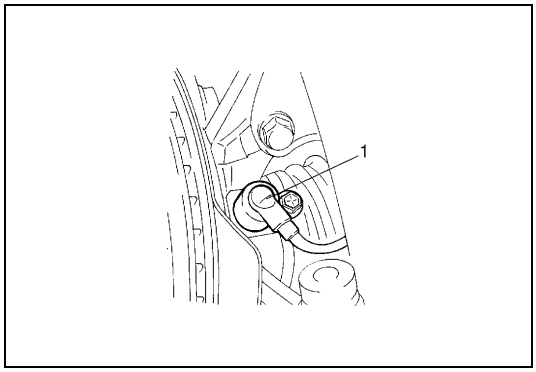

- Install wheel speed sensor (1) (if equipped with ABS).

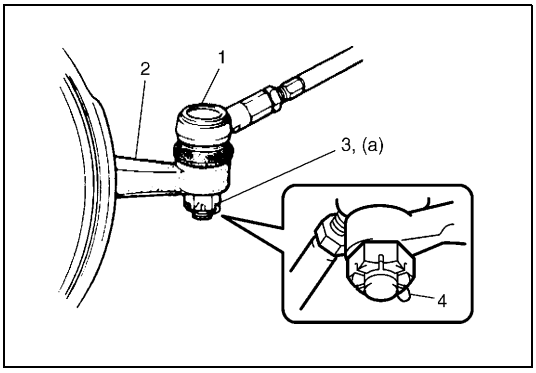

- Connect tie rod end (1) to steering knuckle (2) and tighten tie rod end castle nut (3) to specified torque.

Tightening torque
The rod end castle nut (a) : 43 N·m (4.3 kg-m, 31.5 lb-ft)

- Install new split pin (4).

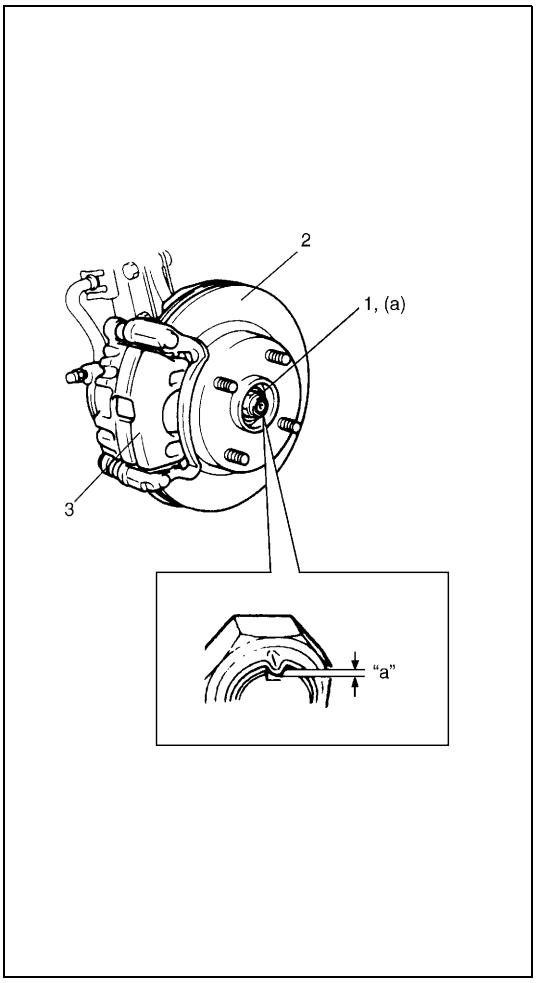

- Install brake disc (2) and brake caliper (3).
- Tighten brake caliper bolt to specified torque.

Tightening torque
Brake caliper bolt : 85 N·m (8.5 kg-m, 61.5 lb-ft)

- Depress foot brake pedal and hold it there.
  Tighten new drive shaft nut (1) to specified torque.

Tightening torque
Drive shaft nut (a) : 175 N·m (17.5 kg-m, 127.0 lb-ft)

CAUTION:
Never reuse drive shaft nut (1).

- Caulk drive shaft nut (1) as shown.

Caulking specification
"a" : 0.5 mm (0.02 in.) or more

CAUTION:
Be careful while caulking nut so that no crack will occur in caulked part of nut. Cracked nut must be replaced with new one.

- Tightening wheel nut to specified torque.

Tightening torque
Wheel nut : 85 N·m (8.5 kg-m, 61.5 lb-ft)

SUSPENSION CONTROL ARM / BUSHING

REMOVAL

1) Remove stabilizer bar. Refer to "STABILIZER BAR AND/OR BUSHINGS" in this section.
2) Remove suspension control arm ball joint bolt (1).

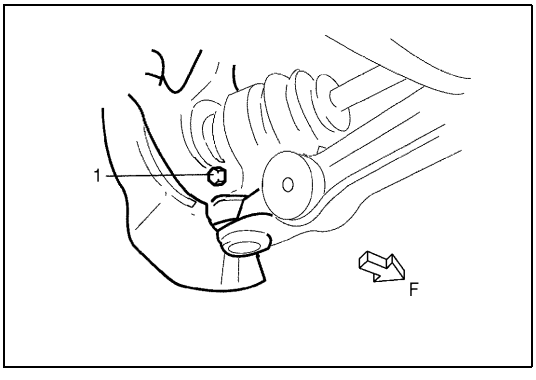

F: Forward

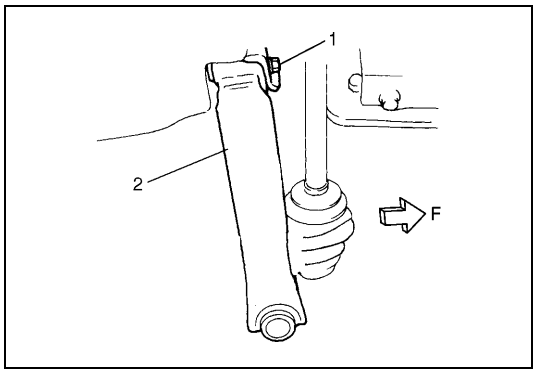

3) Remove suspension control arm bolt (1).
4) Remove suspension control arm (2).

F: Forward

DISASSEMBLY

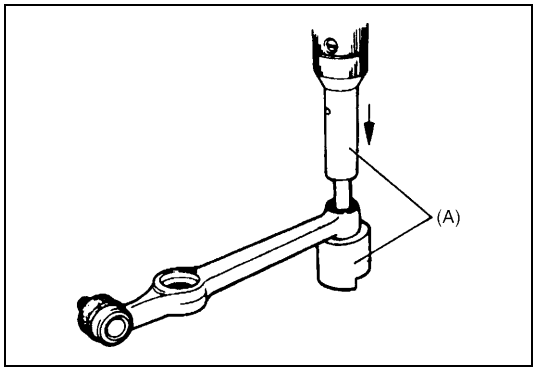

1) Remove bushing.
   Place suspension control arm onto flat surface side of special tool and push out bushing with special tool and oil hydraulic press as shown.

Special tool
(A) : 09943-77910

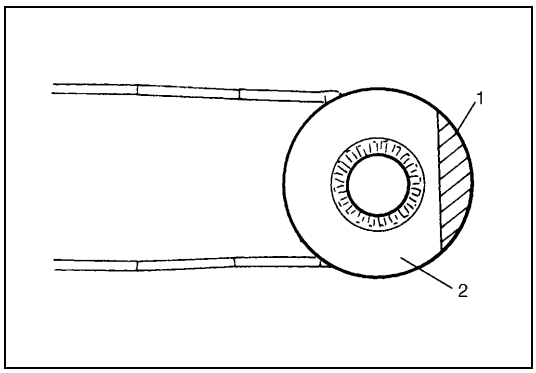

NOTE:

If it is impossible to remove bushing as shown above procedure, cut portion (1) of bushing (2) as shown in figure.

ASSEMBLY

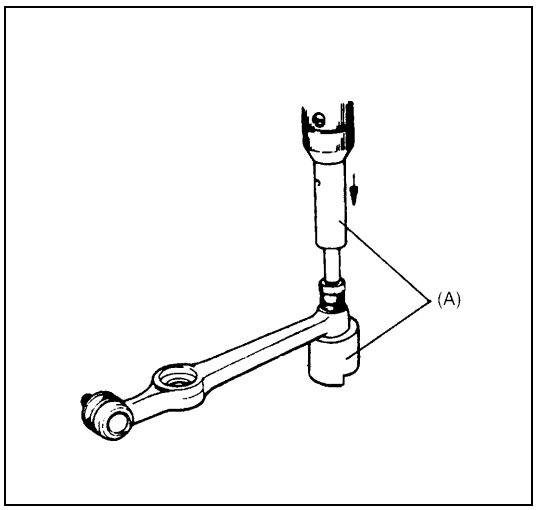

1) Press-fit bushing by using special tool and press.

Special tool
(A) : 09943-77910

CAUTION:
Be sure to use new bushing.

NOTE:

- **Before installing bushing, apply soap water on its circumference to facilitate installation.**
- **When installed, bush should be equal on the right and left of arm as shown.**

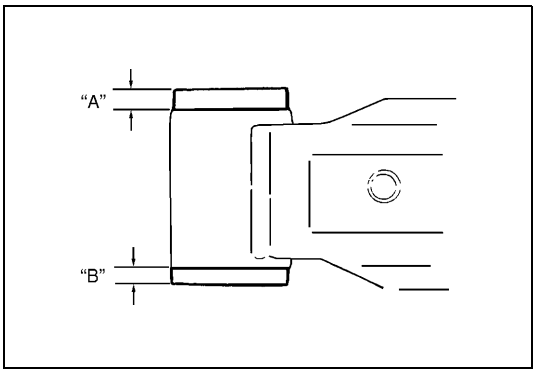

2) Press-fit bushing so that dimensions "A" and "B" in figure become equal.

INSTALLATION

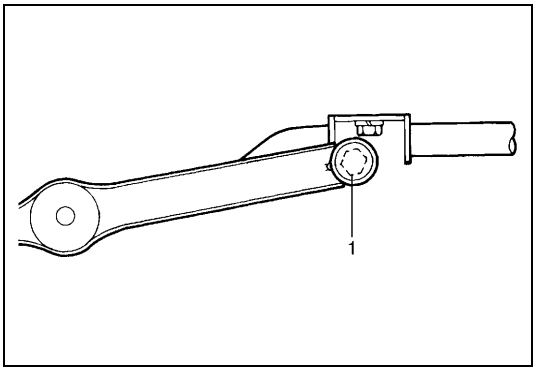

1) Install body side of suspension control arm but tighten suspension control arm bolt (1) only temporarily.

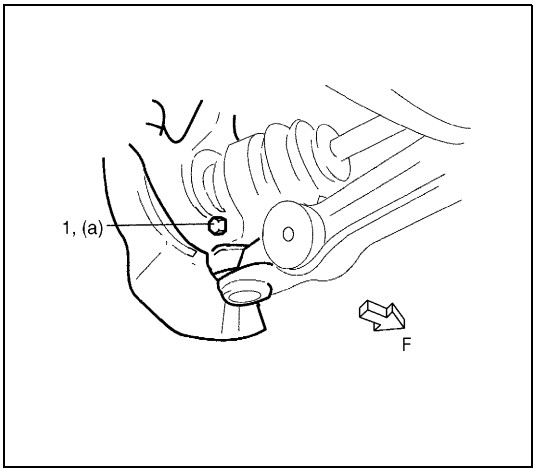

2) Install suspension control arm ball joint to steering knuckle. Align ball stud groove with steering knuckle bolt hole. Then install ball joint bolt (1) from the direction as shown in figure. Tighten suspension arm ball joint bolt (1) to specified torque.

Tightening torque
Suspension arm ball joint bolt
(a) : 60 N·m (6.0 kg-m, 43.5 lb-ft)

3) Install stabilizer bar, referring to "STABILIZER BAR AND/OR BUSHINGS" in this section.

F: Forward

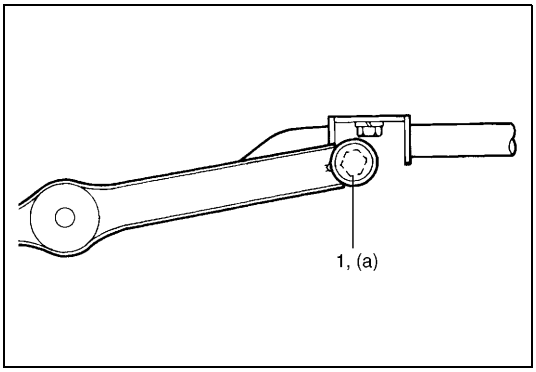

4) Lower hoist and vehicle in non-loaded condition, tighten control arm bolt (1) to specified torque.

Tightening torque
Control arm bolt (a) : 60 N·m (6.0 kg-m, 43.5 lb-ft)

5) Confirm front end (wheel) alignment referring to Section 3A.

REQUIRED SERVICE MATERIAL

Material	Recommended SUZUKI product (Part Number)	Use
Lithium grease	SUZUKI SUPER GREASE A (99000-25010)	• Strut bearing

SPECIAL TOOL

09900-00411 Hexagon wrench socket	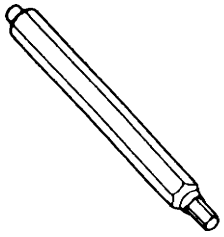 09900-00414 Hexagon wrench bit 6 mm	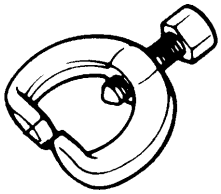 09913-65210 Tie rod end remover	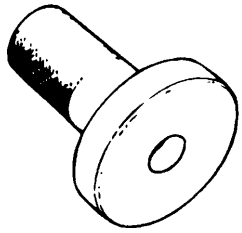 09913-75520 Bearing installer
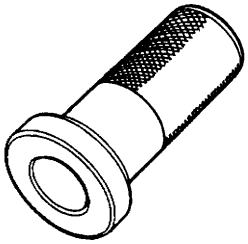 09913-75810 Bearing installer	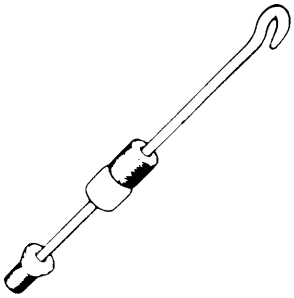 09942-15510 Sliding hammer	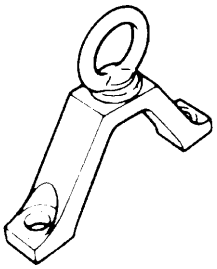 09943-17912 Front wheel hub remover	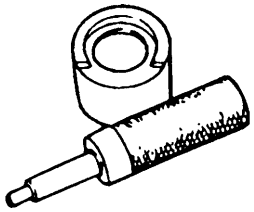 09943-77910 Bushing remover
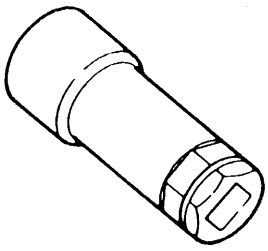 09945-26010 Socket wrench 17 mm	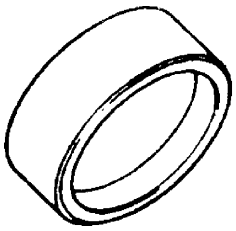 09944-66020 Bearing installer		

SECTION 3E

REAR SUSPENSION

NOTE:

- **All suspension fasteners are an important attaching part in that it could affect the performance of vital parts and systems, and/or could result in major repair expense. They must be replaced with one of the same part number or with an equivalent part if replacement becomes necessary. Do not use a replacement part of lesser quality or substitute design. Torque values must be used as specified during reassembly to assure proper retention of this part.**
- **Never attempt to heat, quench or straighten any front suspension part. Replace it with a new part, or damage to the part may result.**

CONTENTS

GENERAL DESCRIPTION 3E-2
DIAGNOSIS 3E-4
REAR SHOCK ABSORBER CHECK 3E-4
TRAILING ARM, LATERAL ROD, REAR AXLE, PEAR AXLE HOUSING AND COIL SPRING CHECK 3E-4
BUMP STOPPER/SPRING UPPER SEAT CHECK 3E-5
REAR SUSPENSION FASTENERS 3E-5
WHEEL DISC, NUT AND BEARING CHECK 3E-5
ON-VEHICLE SERVICE 3E-6
LATERAL ROD 3E-6
REAR SHOCK ABSORBER 3E-7
COIL SPRING 3E-7
BUMP STOPPER 3E-10
SPRING UPPER SEAT 3E-11
TRAILING ARM 3E-11
REAR AXLE (2WD VEHICLE) 3E-14
WHEEL BEARING AND WHEEL STUD (2WD VEHICLE) 3E-19
REAR AXLE SHAFT AND WHEEL BEARING (4WD VEHICLE) 3E-21
REAR AXLE SHAFT OIL SEAL (4WD VEHICLE) 3E-25
REAR AXLE HOUSING (4WD VEHICLE) 3E-26
REQUIRED SERVICE MATERIAL 3E-32
SPECIAL TOOL 3E-32

GENERAL DESCRIPTION

Rear suspension is Isolated Trailing Link (I.T.L.) type which consists of coil springs, rear axle, rear axle housing, shock absorbers, lateral rod and trailing arms.

2WD vehicle

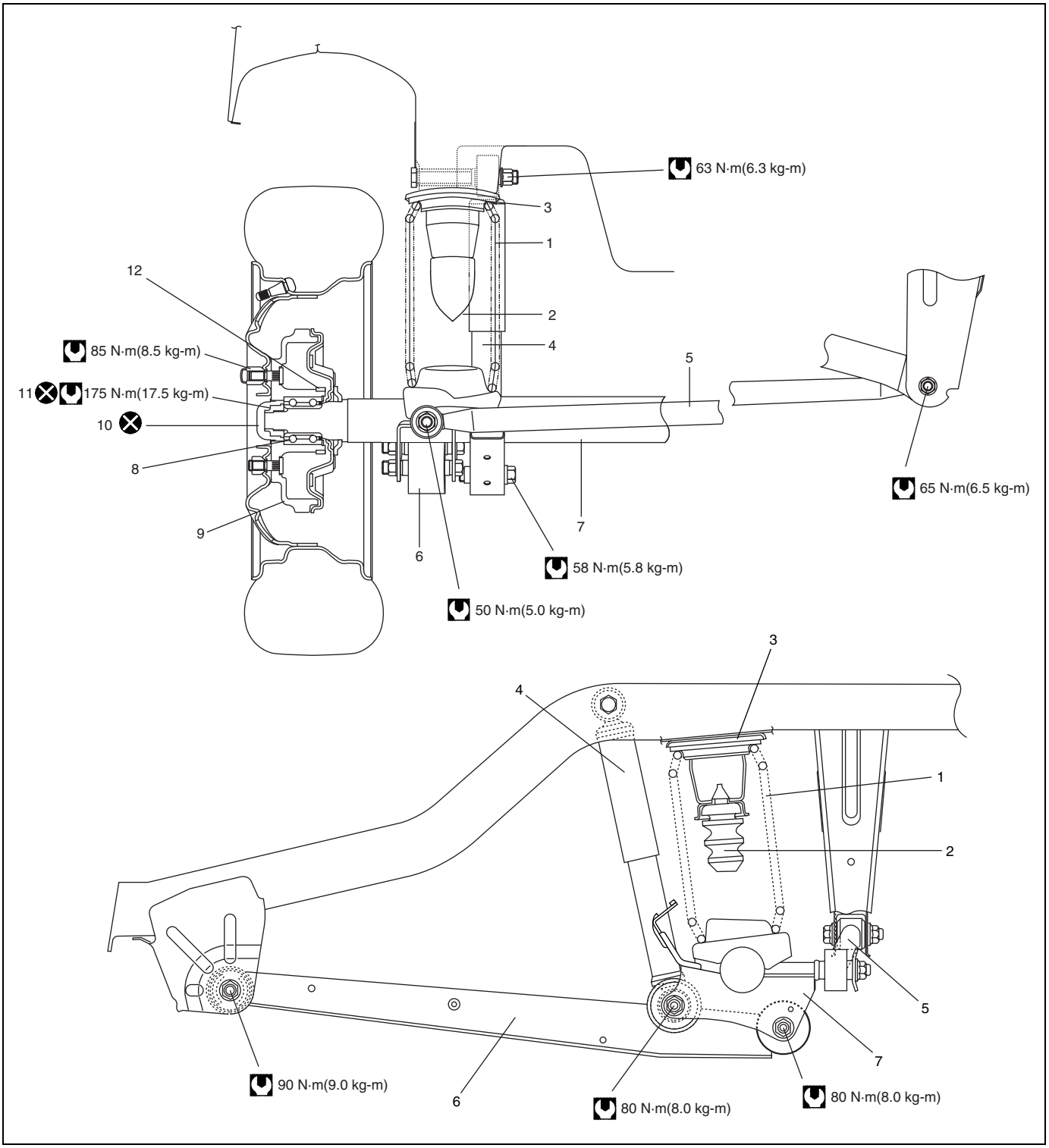

1. Rear coil spring	5. Lateral rod	9. Brake drum	Tightening torque
2. Rear bump stopper	6. Trailing arm	10. Spindle cap	Do not reuse.
3. Rear spring upper seat	7. Rear axle	11. Spindle nut	
4. Rear shock absorber	8. Wheel Bearing	12. Rear wheel sensor ring (if equipped with ABS)	

4WD vehicle

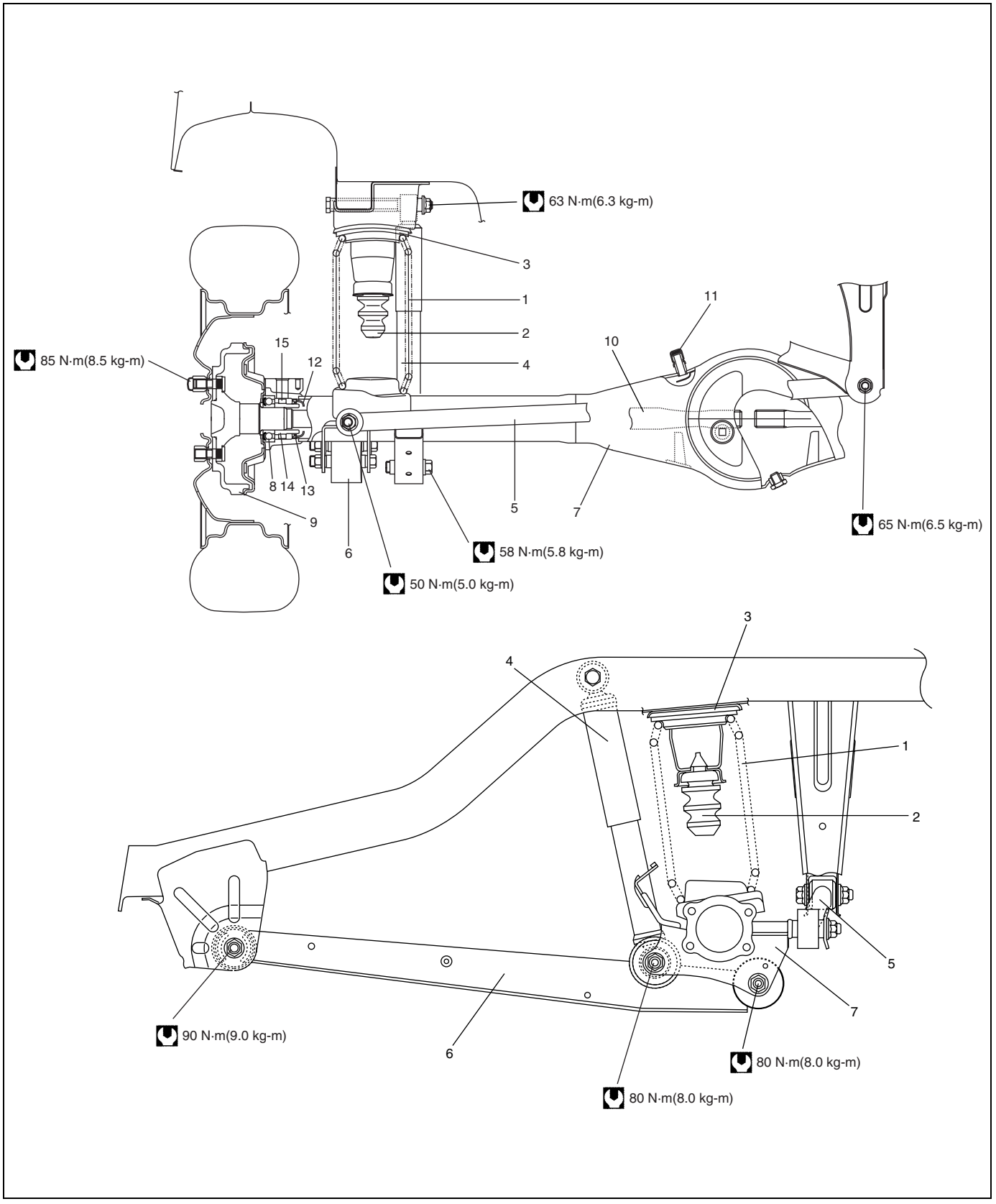

1. Rear coil spring	5. Lateral rod	9. Brake drum	13. Oil seal
2. Rear bump stopper	6. Trailing arm	10. Rear axle shaft	14. Wheel bearing retainer ring
3. Rear spring upper seat	7. Rear axle housing	11. Breather cap	15. Rear wheel sensor ring (if equipped with ABS)
4. Rear shock absorber	8. Wheel bearing	12. Oil seal protector	Tightening torque

DIAGNOSIS

REAR SHOCK ABSORBER CHECK

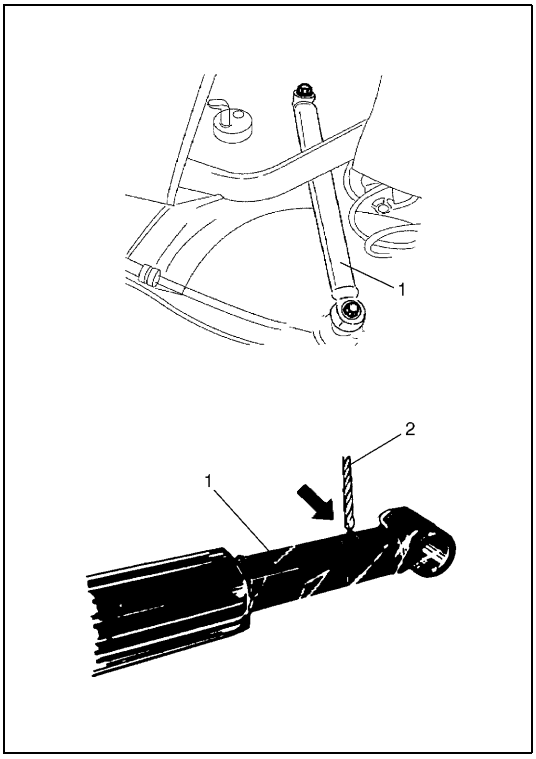

- Inspect for deformation or damage.
- Inspect bushings for wear or damage.
- Inspect for evidence of oil leakage.

Replace any defective part.

WARNING:

When handling rear shock absorber (1) in which high-pressure gas is sealed, make sure to observe the following precautions.

- **Don't disassemble it.**
- **Don't put it into the fire.**
- **Don't store it where it gets hot.**
- **Before disposing it, be sure to drill a hole (approximately 3 mm (0.12 in.) diameter) (2) in it where shown by an arrow in figure and let gas and oil out.**
  Lay it down sideways for this work. The gas itself is harmless but it may issue out of the hole together with chips generated by the drill. Therefore, be sure to wear goggle.

TRAILING ARM, LATERAL ROD, REAR AXLE, PEAR AXLE HOUSING AND COIL SPRING CHECK

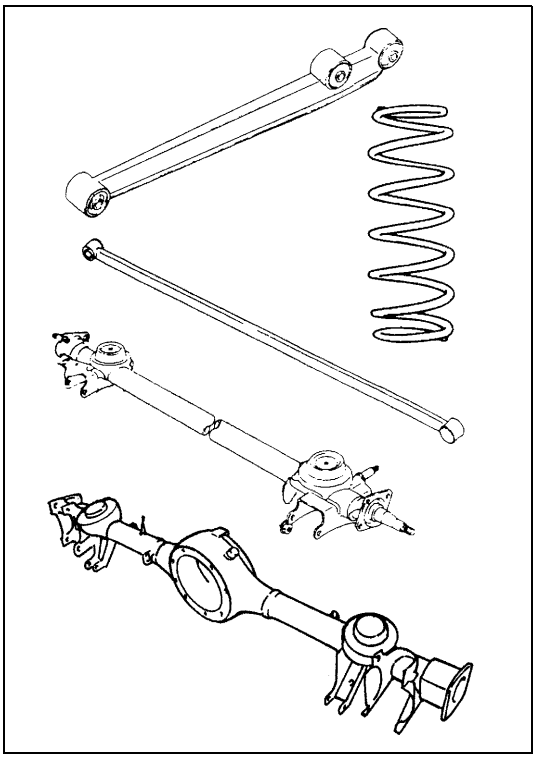

- Inspect for cracks, deformation or damage.
- Inspect bushing for damage, wear or breakage.

Replace any defective part.

BUMP STOPPER/SPRING UPPER SEAT CHECK

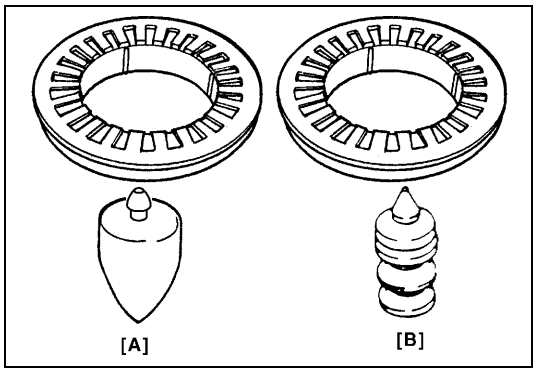

- Inspect for cracks, deformation or damage.

Replace any defective part.

[A] : 2WD VEHICLE
[B] : 4WD VEHICLE

REAR SUSPENSION FASTENERS

Check each bolt and nut fastening suspension parts for tightness. Tighten loose one, if any, to specified torque referring to the figure in “GENERAL DESCRIPTION” in this section.

WHEEL DISC, NUT AND BEARING CHECK

- Inspect each wheel disc for dents, distortion and cracks. A disc in badly damaged condition must be replaced.
- Check wheel nuts for tightness and, as necessary, retighten to specification.

Tightening torque
Wheel nuts (a) : 85 N·m (8.5 kg-m, 61.5 lb-ft)

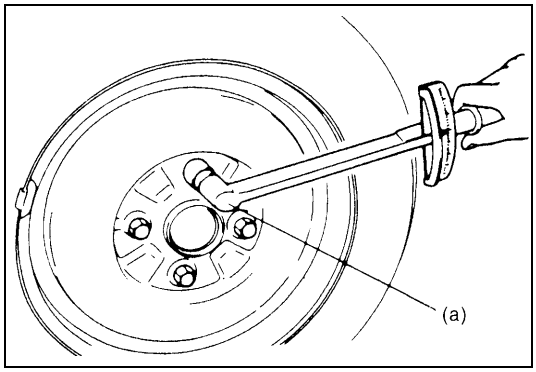

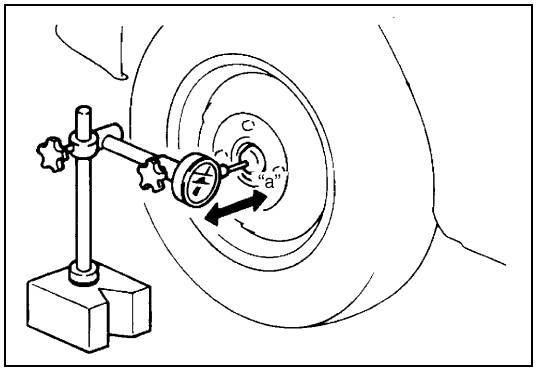

- Check wheel bearings for wear. When measuring thrust play, apply a dial gauge to spindle cap center (2WD) or axle shaft center (4WD).

Thrust play limit
“a” : 0.1 mm (0.004 in.)

When measurement exceeds limit, replace bearing.

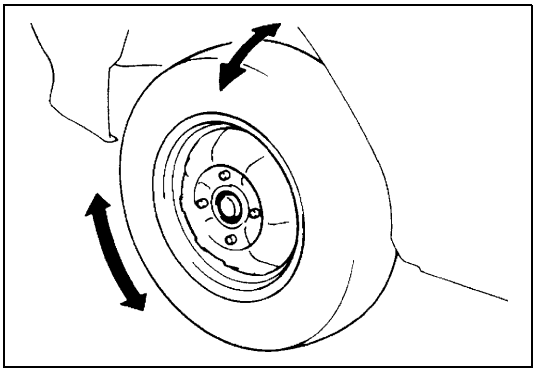

- By rotating wheel actually, check wheel bearing for noise and smooth rotation. If it is defective, replace bearing.

ON-VEHICLE SERVICE

LATERAL ROD

REMOVAL

1) Hoist vehicle.

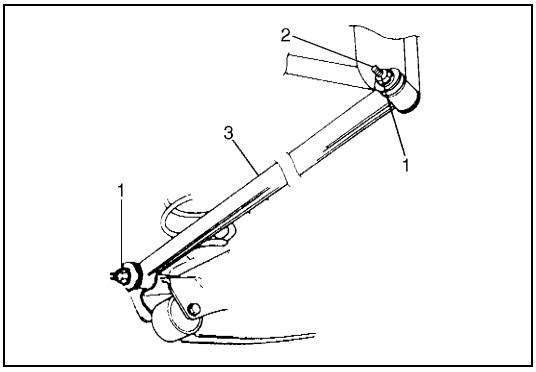

2) Remove lateral rod nuts (1) and bolt (2).
3) Remove lateral rod (3).

INSTALLATION

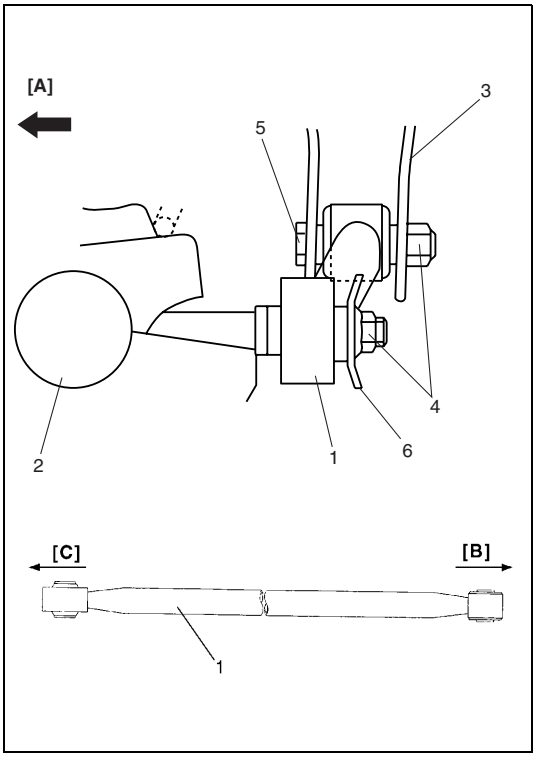

1) Install lateral rod (1) to rear axle (2) (2WD vehicle) or rear axle housing (4WD vehicle) and vehicle body (3) referring to figure for proper installing direction of nuts (4), bolt (5) and washer (6).
   Tighten nuts temporarily at this step.

[A] :	Forward
[B] :	Body side
[C] :	Rear axle (2WD vehicle) or rear axle housing (4WD vehicle) side

2) Lower hoist.

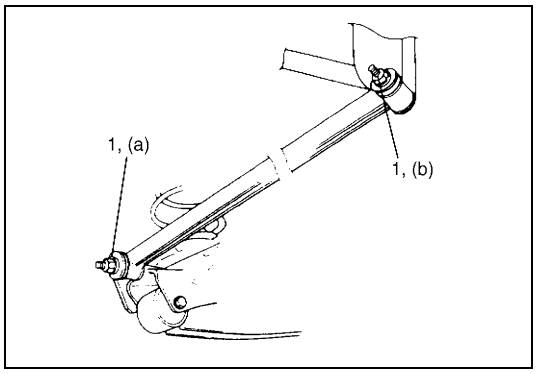

3) Tighten lateral rod nuts (1) to specified torque. It is the most desirable to have vehicle off hoist and in no-loaded condition when tightening them.

Tightening torque
Lateral rod left side nut (a) : 50 N·m (5.0 kg-m, 36.5 lb-ft)
Lateral rod right side nut (b) : 65 N·m (6.5 kg-m, 47.0 lb-ft)

REAR SHOCK ABSORBER

REMOVAL

1) Hoist vehicle.
2) Support rear axle (1) (2WD vehicle) or rear axle housing (4WD vehicle) using floor jack to prevent it from lowering.

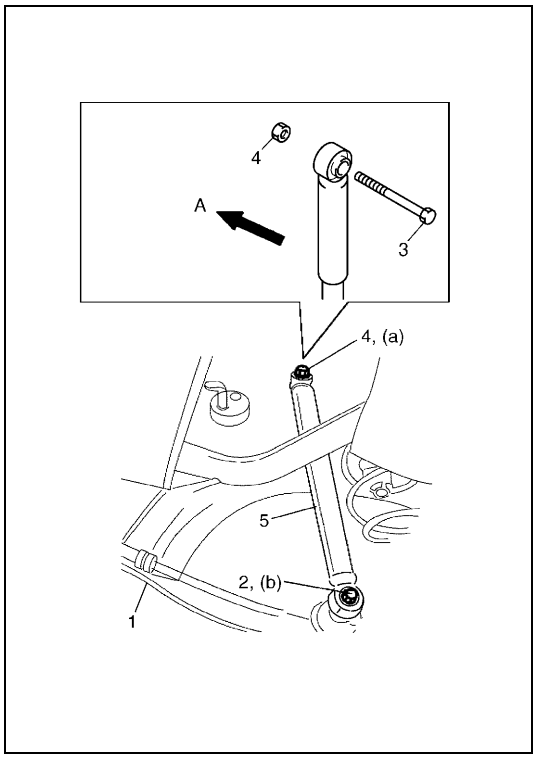

3) Remove lower bolt (2).
4) Remove upper bolt (3) and nut (4). Then remove shock absorber (5).

INSTALLATION

1) Install shock absorber (5) referring to the figure.
   Tighten bolt and nut temporarily at this step.
2) Remove floor jack from rear axle (2WD vehicle) or rear axle housing (4WD vehicle) (1) and lower hoist.
3) Tighten bolt and nut to specified torque.

Tightening torque
Rear shock absorber upper nut
(a) : 63 N·m (6.3 kg-m, 46.0 lb-ft)
Rear shock absorber lower nut
(b) : 58 N·m (5.8 kg-m, 42.0 lb-ft)

A : Vehicle inside

COIL SPRING

REMOVAL

1) Hoist vehicle and remove rear wheel (s).

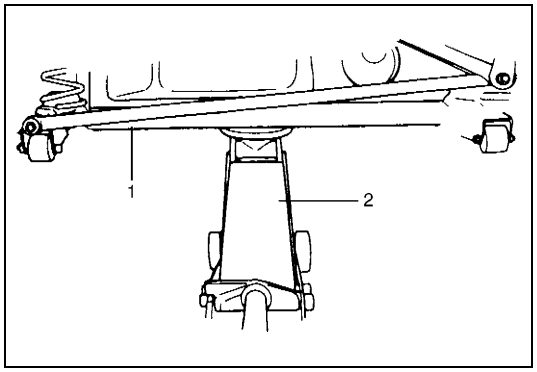

2) Support rear axle (1) (2WD vehicle) or rear axle housing (4WD vehicle) using floor jack (2) to prevent it from lowering.

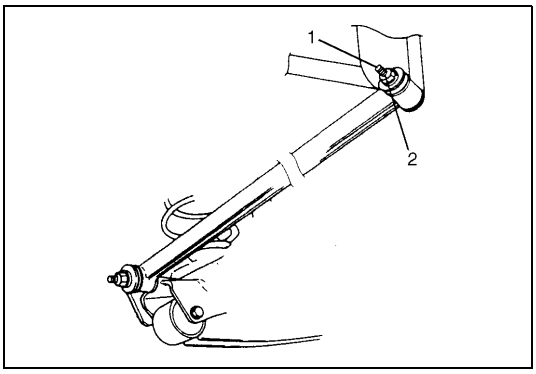

3) Remove lateral rod right side bolt (1) and nut (2).
4) Detach lateral rod right side from vehicle body.

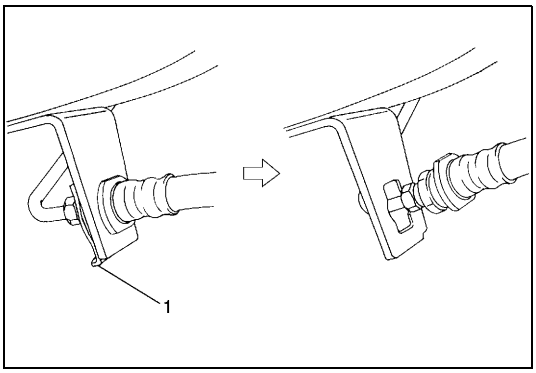

5) Remove brake flexible hose E-ring (1).
6) Remove LSPV adjust nut and detach spring end from rear axle (2WD vehicle) or axle housing (4WD vehicle) (if equipped with LSPV).

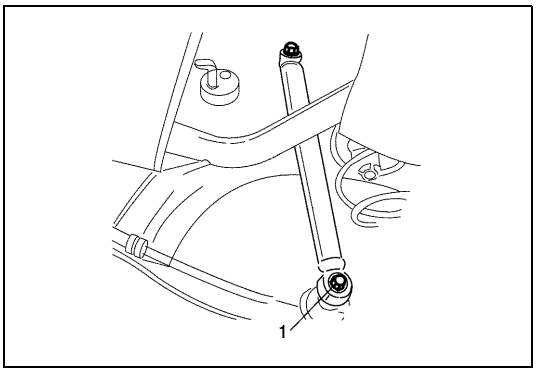

7) Remove shock absorber lower bolt (1).
8) Detach shock absorber lower side from rear axle (2WD vehicle) or rear axle housing (4WD vehicle).

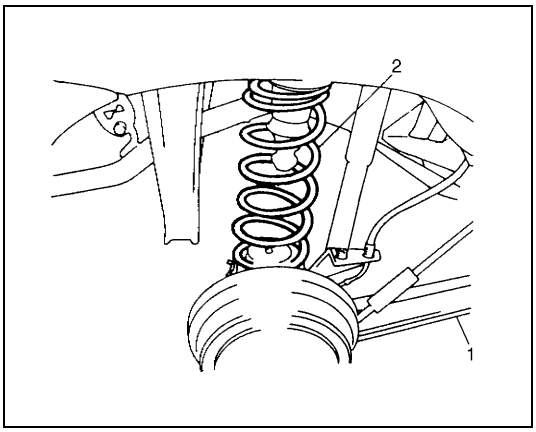

9) Lower rear axle (1) (2WD vehicle) or rear axle housing (4WD vehicle) gradually as far down as where coil springs (2) can be removed.

CAUTION:
Be careful not to let rear axle (2WD vehicle) or rear axle housing (4WD vehicle) down too much.
It may cause damage to brake flexible hose.

10) Remove coil spring.

INSTALLATION

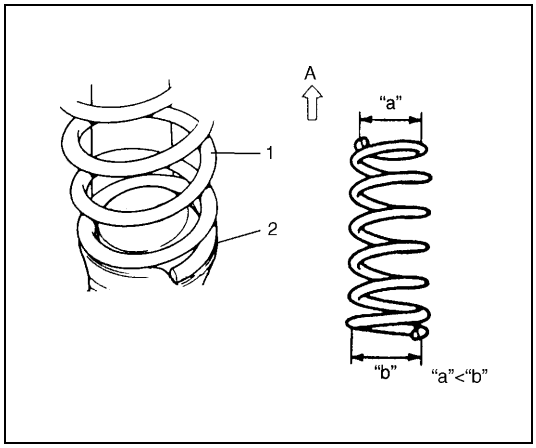

1) Install coil springs (1) (right & left) on spring seat (2) of rear axle (2WD vehicle) or rear axle housing (4WD vehicle) and raise rear axle (2WD vehicle) or rear axle housing (4WD vehicle).

NOTE:

Upper and lower diameters of coil spring are different. Bring larger diameter end at bottom and set its open end in place on spring seat.

A : Upper side

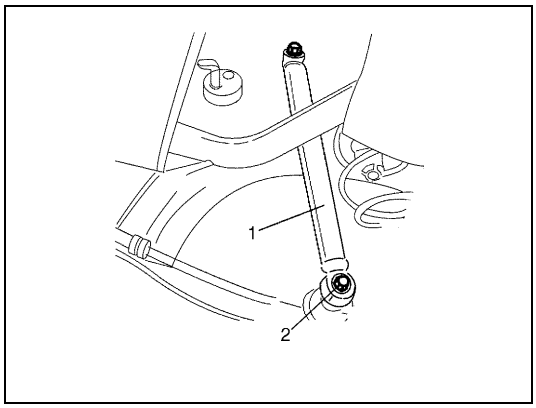

2) Install shock absorber (1) lower side to rear axle (2WD vehicle) or rear axle housing (4WD vehicle).
   Tighten shock absorber lower bolt (2) temporarily at this step.
3) Remove floor jack from rear axle (2WD vehicle) or axle housing (4WD vehicle).
4) Install brake flexible hose E-ring.
5) Install LSPV spring to rear axle (2WD vehicle) or axle housing (4WD vehicle). Tighten LSPV adjust nut temporarily at this step (if equipped with LSPV).

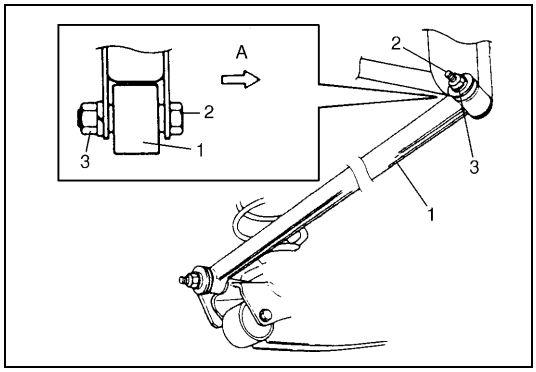

6) Install lateral rod (1) right side to vehicle body, refer to the figure for proper installing direction of bolt (2).
   Tighten nut (3) temporarily at this step.
7) Remove floor jack from rear axle (2WD vehicle) or rear axle housing (4WD vehicle).

A : Forward

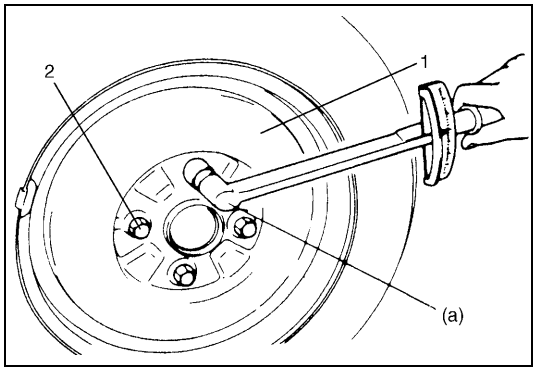

8) Install wheel (1) and tighten wheel nuts (2) to specified torque.

Tightening torque
Wheel nuts (a) : 85 N·m (8.5 kg-m, 61.5 lb-ft)

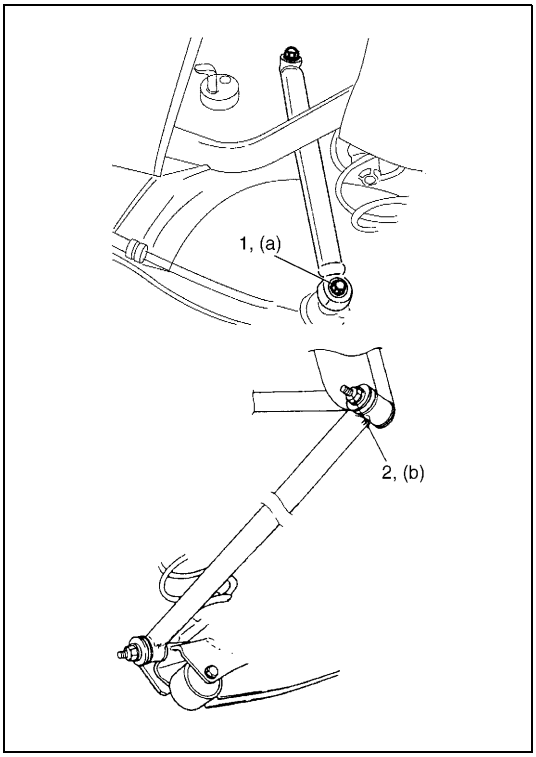

9) Lower hoist and vehicle in non-loaded condition, tighten absorber lower bolt (1) and lateral rod right side nut (2) to specified torque.

Tightening torque
Rear shock absorber lower bolt
(a) : 58 N·m (5.8 kg-m, 42.0 lb-ft)
Lateral rod right side nut
(b) : 65 N·m (6.5 kg-m, 47.0 lb-ft)

10) If equipped with LSPV, check and adjust LSPV spring referring to “LSPV INSPECTION AND ADJUSTMENT” and perform “FLUID PRESSURE TEST” in Section 5.

BUMP STOPPER

REMOVAL

1) Hoist vehicle and remove rear wheel.

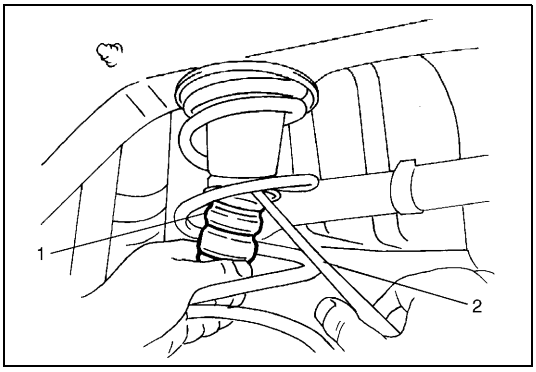

2) Remove bump stopper (1) using flat tip rod or the like (2).

INSTALLATION

1) Install bumper stopper.

NOTE:
Before installing bushing, apply soap water on it.

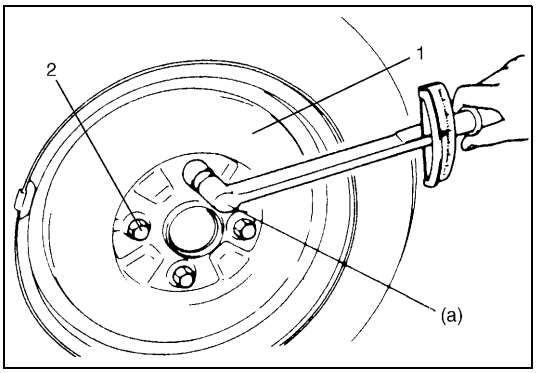

2) Install wheel (1) and tighten wheel nuts (2) to specified torque.

Tightening torque
Wheel nuts (a) : 85 N·m (8.5 kg-m, 61.5 lb-ft)

SPRING UPPER SEAT

REMOVAL

1) Removal coil spring. Refer to “COIL SPRING” in this section.

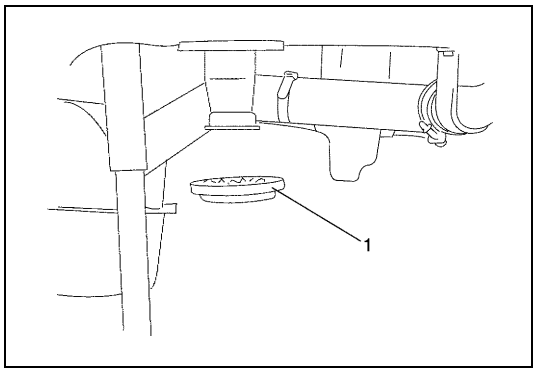

2) Remove spring upper seat (1).

INSTALLATION

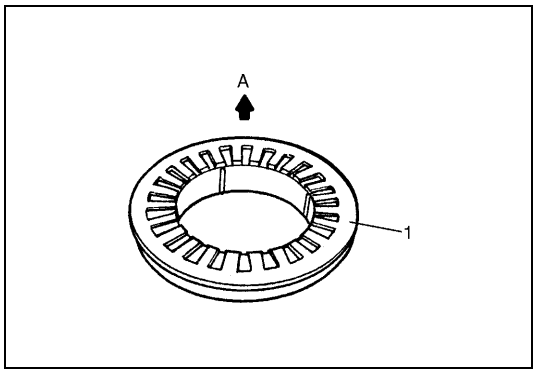

1) Install spring upper seat (1).

NOTE:

For proper installing direction of spring upper seat (1), refer to the figure.

A : Vehicle body side (Upper side)

2) Install coil spring. Refer to “COIL SPRING” in this section.

TRAILING ARM

REMOVAL

1) Hoist vehicle and remove rear wheel.

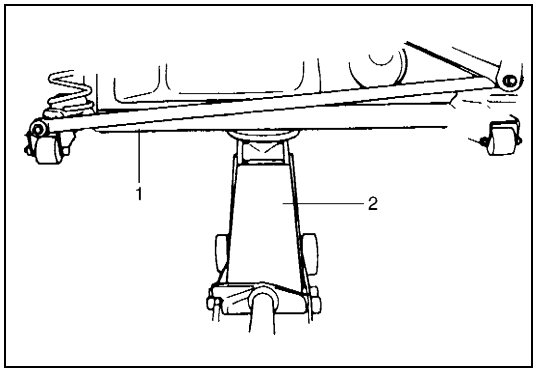

2) Support rear axle (1) (2WD vehicle) or rear axle housing (4WD vehicle) using floor jack (2).

CAUTION:

Never apply floor jack against lateral rod as it may get deformed.

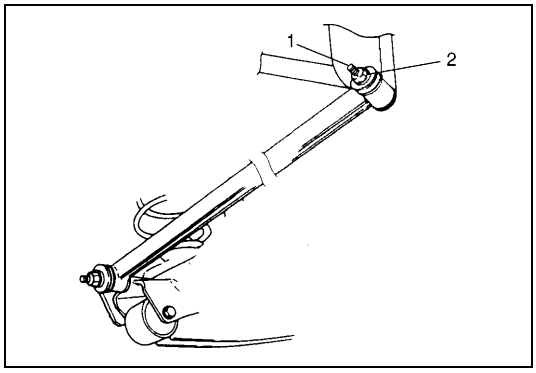

3) Remove lateral rod right side bolt (1) and nut (2).

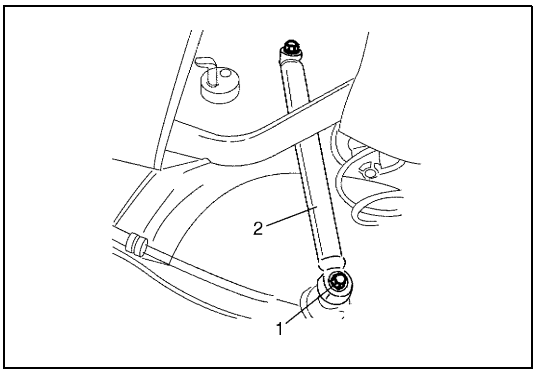

4) Remove shock absorber lower bolt (1).
5) Detach shock absorber (2) lower side from rear axle (2WD vehicle) or rear axle housing (4WD vehicle).

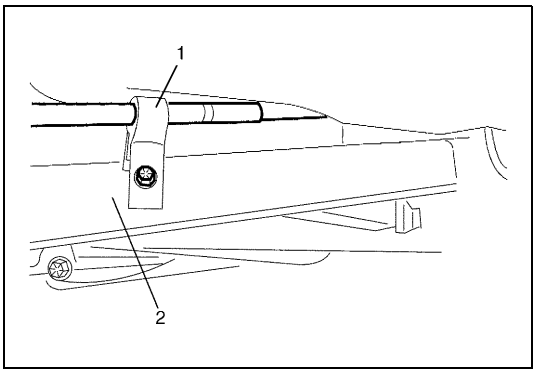

6) Remove parking brake cable clamp (1) from trailing arm (2).
7) Release wheel speed sensor lead wire clamps (right & left) from trailing arm (if equipped with ABS).

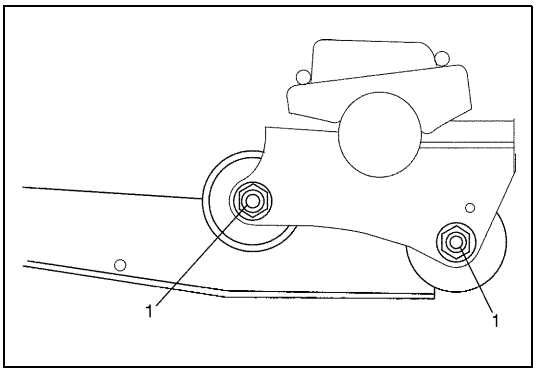

8) Remove trailing arm rear bolts (1).

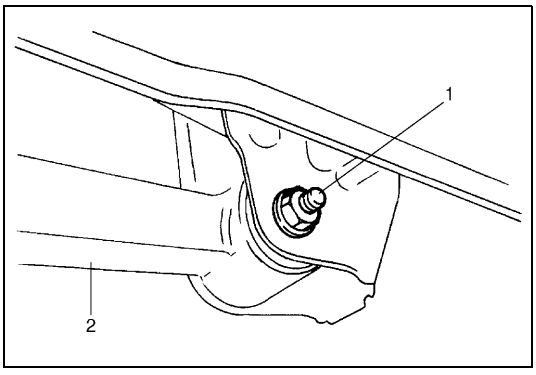

9) Remove trailing arm front bolt (1) and then remove trailing arm (2).

INSTALLATION

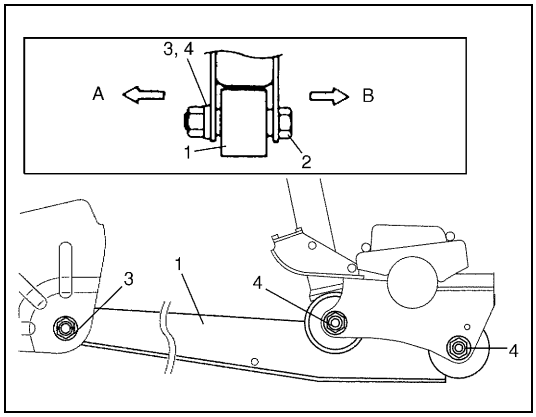

1) Install trailing arm (1) to vehicle body and rear axle (2WD vehicle) or rear axle housing (4WD vehicle), referring to figure for proper installing direction of bolts (2).
   Tighten front nut (3) and rear nuts (4) temporarily at this step.

A :	Vehicle out side
B :	Vehicle center side

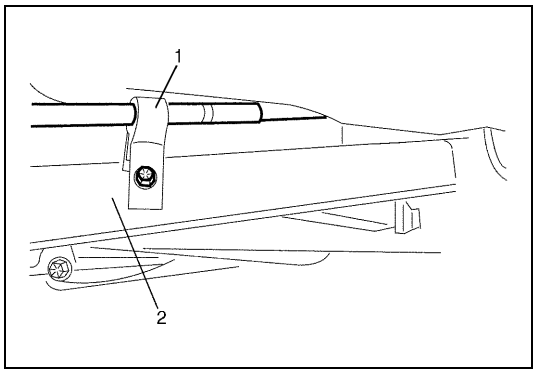

2) Install parking brake cable clamp (1) to trailing arm (2).
3) Clamp wheel speed sensor lead wire (right & left) to trailing arm securely (if equipped with ABS).

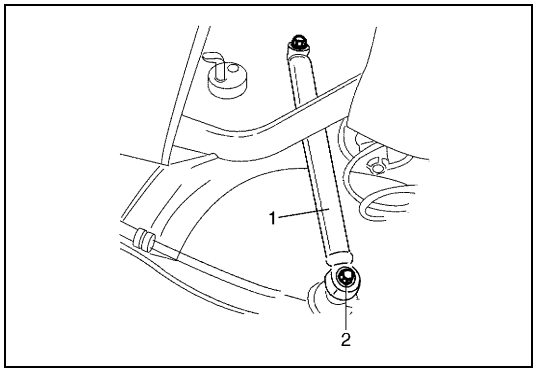

4) Install shock absorber (1) lower side to rear axle (2WD vehicle) or rear axle housing (4WD vehicle).
   Tighten shock absorber lower bolt (2) temporarily at this step.

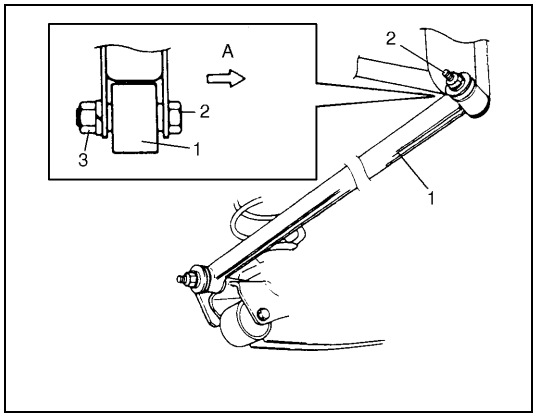

5) Install lateral rod (1) to vehicle body, refer to the figure for proper installing direction of bolt (2).
   Tighten nut (3) temporarily at this step.
6) Remove floor jack from rear axle.
7) Install wheel and tighten wheel nuts to specified torque.

Tightening torque
Wheel nuts : 85 N·m (8.5 kg-m, 61.5 lb-ft)

A :	Forward

8) Lower hoist.

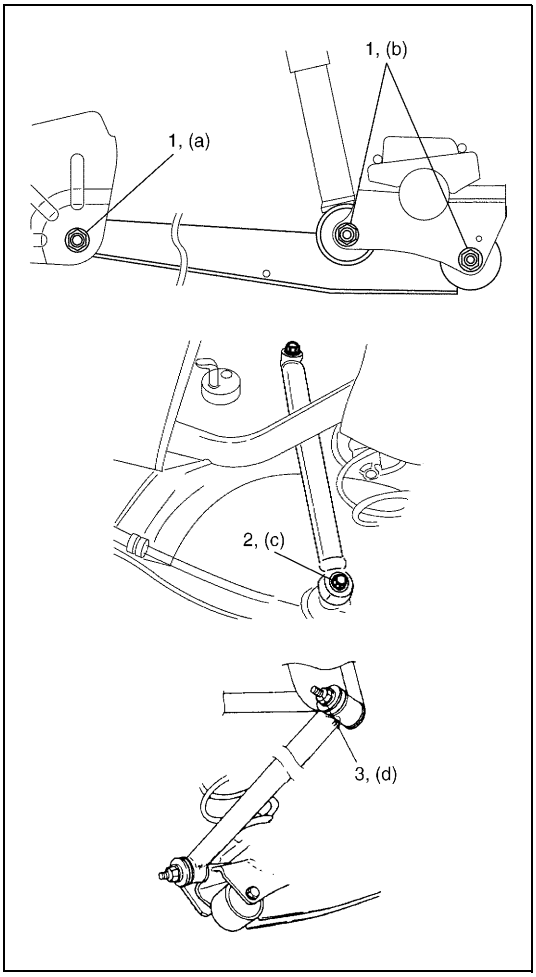

9) Tighten front and rear trailing arm nuts (1), shock absorber lower bolts (2) and lateral rod right nut (3) to specified torque (right and left).

NOTE:

When tightening these nuts, be sure that vehicle is off hoist and in no-loaded condition.

Tightening torque
Front trailing arm nut (a) : 90 N·m (9.0 kg-m, 65.0 lb-ft)
Rear trailing arm nuts (b) : 80 N·m (8.0 kg-m, 58.0 lb-ft)
Rear shock absorber lower bolts
(c) : 58 N·m (5.8 kg-m, 42.0 lb-ft)
Lateral rod right nut (d) : 65 N·m (6.5 kg-m, 47.0 lb-ft)

REAR AXLE (2WD VEHICLE)

REMOVAL

1) Hoist vehicle and remove rear wheels (right & left).

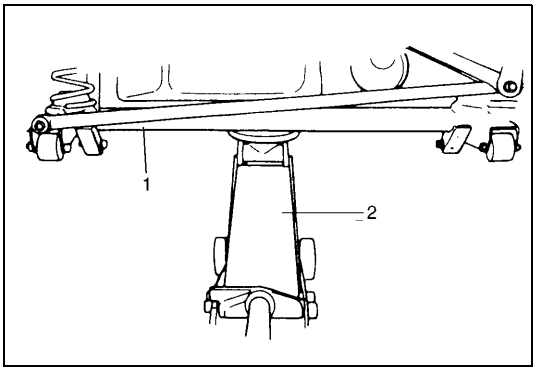

2) Support rear axle (1) using floor jack (2).
3) Remove rear brake drums (right & left). Refer to “BRAKE DRUM” in Section 5.

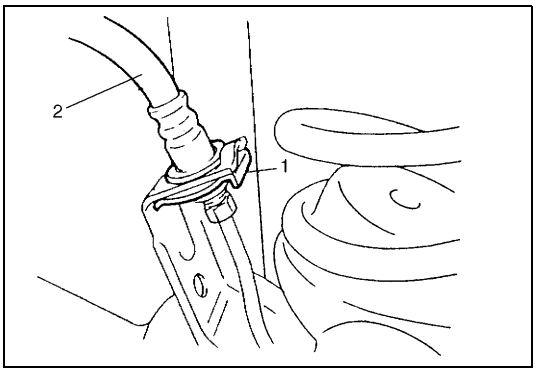

4) Remove E-ring (1) (right & left) securing brake hose (2).

CAUTION:
Do not allow brake fluid to get on painted surfaces.

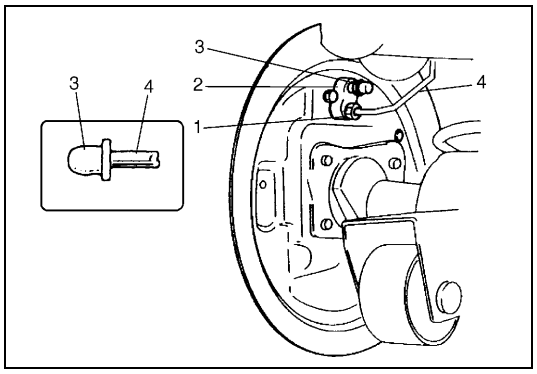

5) Disconnect brake pipe flare nuts (1) from wheel cylinders (2) (right & left) and put bleeder plug cap (3) onto brake pipe (4) to prevent fluid from spilling.

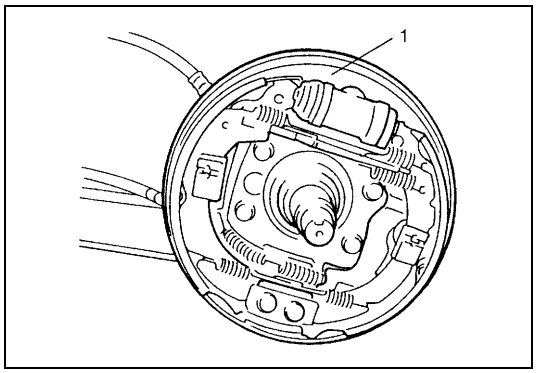

6) Remove brake back plates (1) (right & left) from rear axle and hang removed back plate with a wire hook.

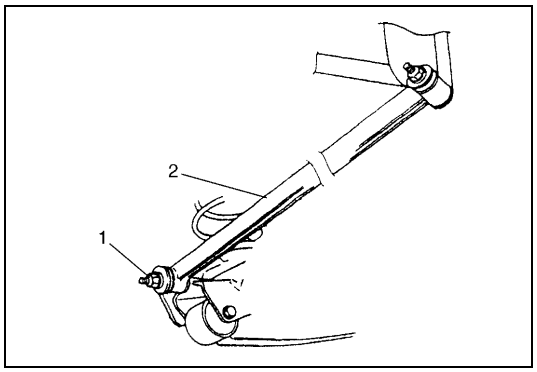

7) Remove lateral rod left side nut (1).
8) Detach lateral rod (2) left side from rear axle.

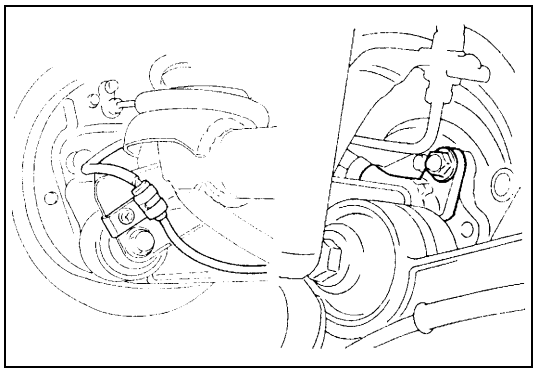

9) Remove wheel speed sensor and release clamps (right & left) (if equipped with ABS).

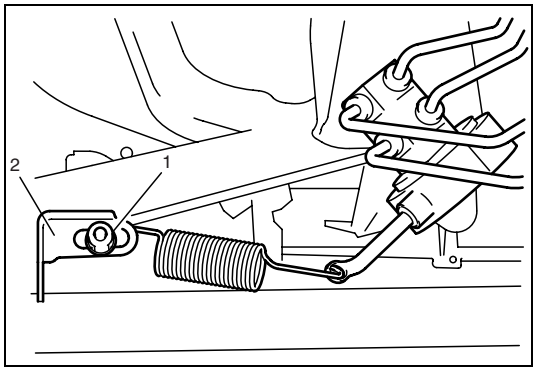

10) Remove nut (1) and detach spring end from rear axle (2) (if equipped with LSPV).

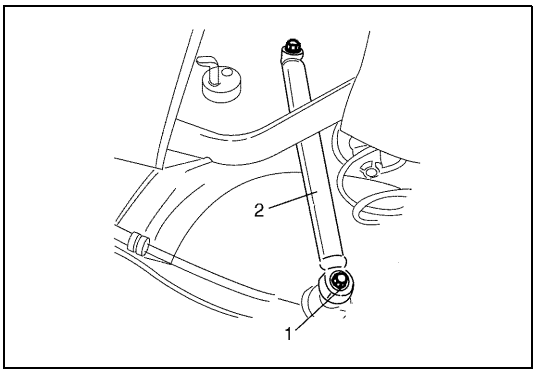

11) Remove shock absorber lower bolts (1) (right & left).
12) Detach shock absorber (2) lower sides (right & left) from rear axle.
13) Lower rear axle gradually as far down as where coil springs (1) (right & left) can be removed.

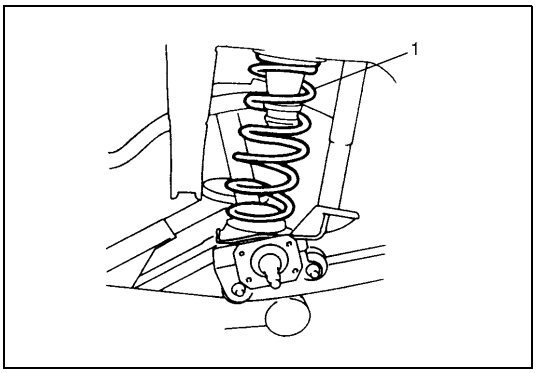

14) Remove coil springs (right & left).

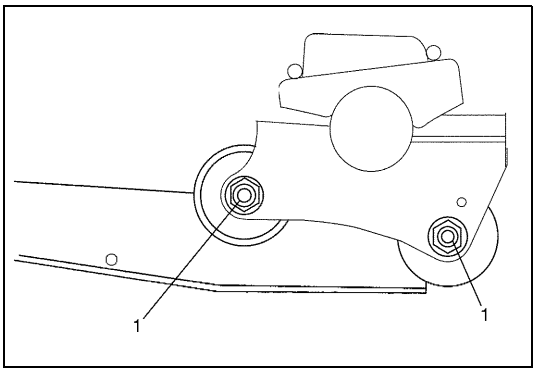

15) Loosen rear trailing arm nuts (1) from trailing arm but don't remove bolts (right & left).

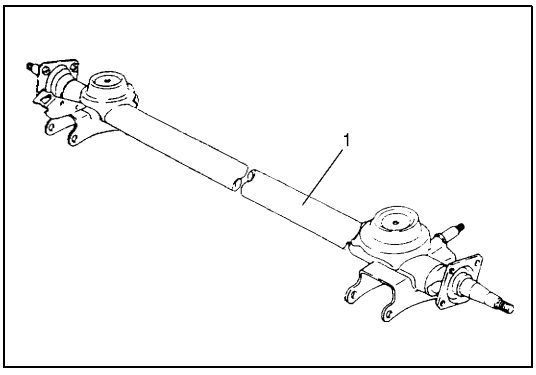

16) While supporting rear axle (1) at both ends (right & left), remove rear trailing arm bolts (right & left) and then remove rear axle (1) from chassis by lowering floor jack gradually.

INSTALLATION

Install removed parts in reverse order of removal, noting the following points.

1) Place rear axle on floor jack.
   Then install lateral rod to rear axle and tighten nut temporarily at this step.

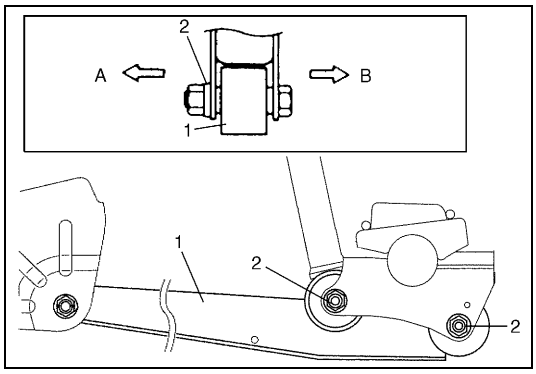

2) Install trailing arms (1) (right & left) to rear axle in proper direction as shown in figure.
   Tighten rear trailing arm nuts (2) temporarily at this step.

A : Vehicle outside
B : Vehicle center side

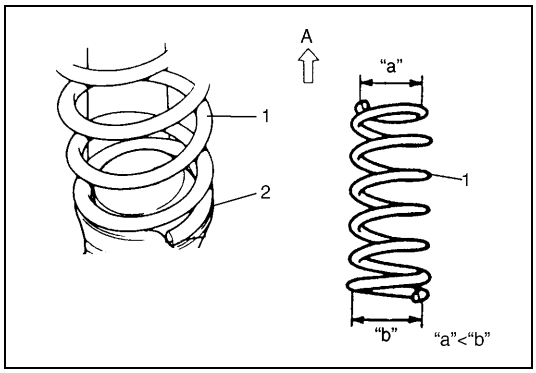

3) Install coil springs (1) (right & left) on spring seat (2) of rear axle and raise rear axle.

NOTE:

Upper and lower diameters of coil spring are different. Bring larger diameter end at bottom and set its open end in place on spring seat.

A : Upper side

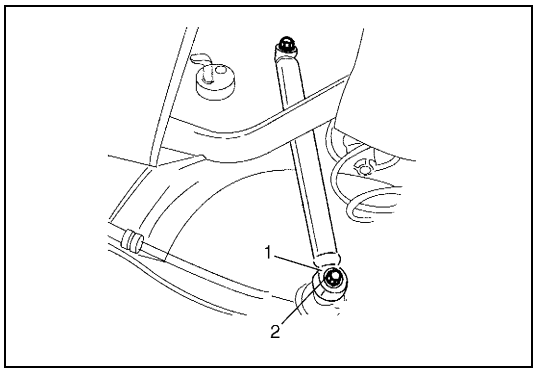

4) Install shock absorber (1) lower sides (right & left) to rear axle.
   Tighten shock absorber lower bolts (2) temporarily at this step.
5) Remove floor jack from rear axle.

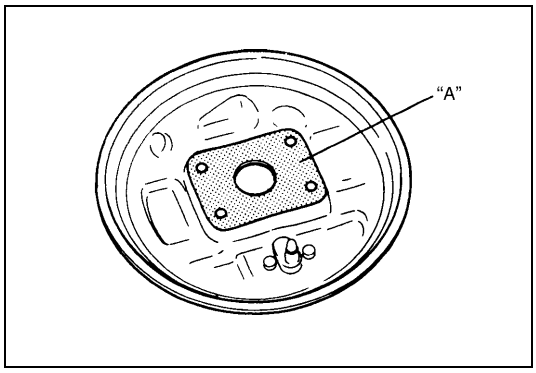

6) Clean mating surfaces (right and left) of rear axle with brake back plate and apply water tight sealant as shown in figure.

"A" : Sealant 99000-31090

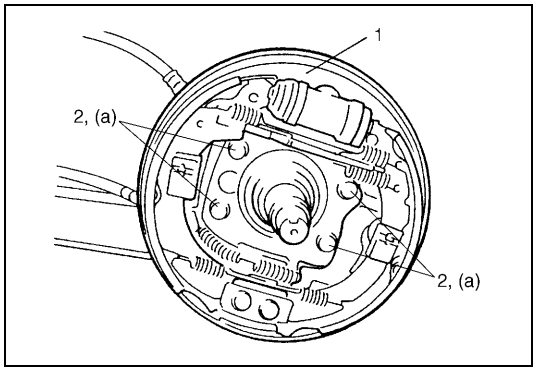

7) Install brake back plates (1) (right and left) and tighten back plate bolts (2) to specified torque.

Tightening torque
Brake back plate bolts (a) : 23 N·m (2.3 kg-m, 17.0 lb-ft)

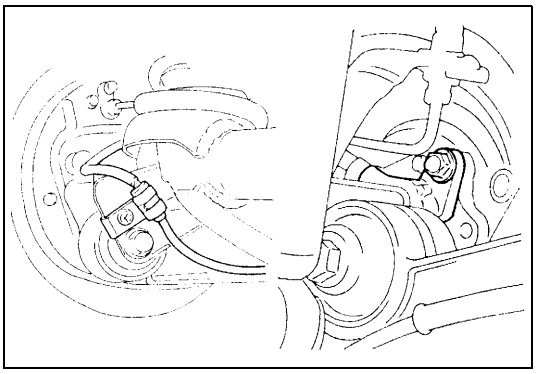

8) Install wheel speed sensor and clamp wire securely (right & left) (if equipped with ABS).

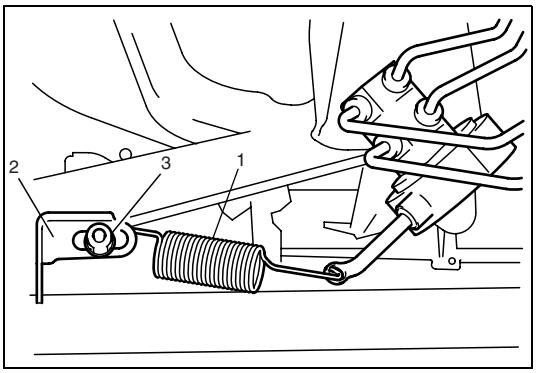

9) Install LSPV spring (1) to rear axle (2).
Tighten nut (3) temporarily at this step (if equipped with LSPV).

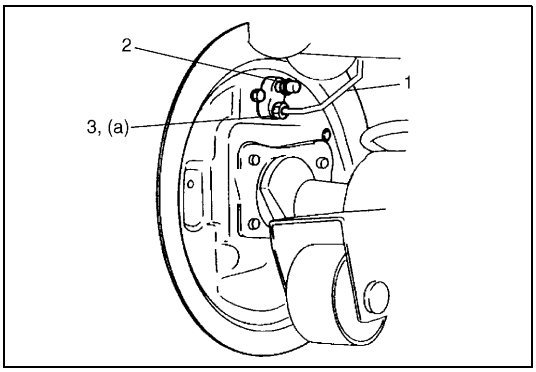

10) Connect brake pipes (1) (right & left) to wheel cylinders (2) and tighten brake pipe flare nuts (3) to specified torque.

Tightening torque
Brake pipe flare nuts (a) : 16 N·m (1.6 kg-m, 11.5 lb-ft)

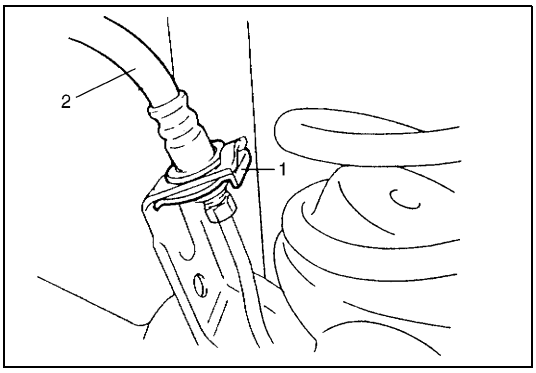

11) Connect brake flexible hoses (1) to bracket on rear axle and secure it with E-rings (2).
12) Install brake drums (right & left). Refer to “BRAKE DRUM” in Section 5.
13) Fill reservoir with brake fluid and bleed brake system (For bleeding operation, refer to Section 5.)

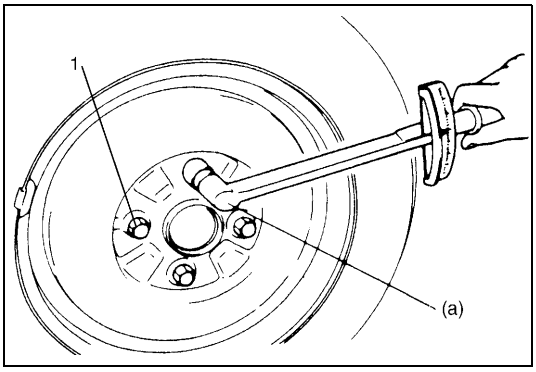

14) Install wheel and tighten wheel nuts (1) to specified torque.

Tightening torque
Wheel nuts (a) : 85 N·m (8.5 kg-m, 61.5 lb-ft)

15) Upon completion of all jobs, depress brake pedal with about 30 kg (66 lbs) load three to five times so as to obtain proper drum-to-shoe clearance.
    Adjust parking brake cable. Refer to Section 5.
16) Install console box.
17) Lower hoist and bounce vehicle up and down several times to stabilize suspension.
    Be sure that vehicle is off hoist and in non loaded condition.

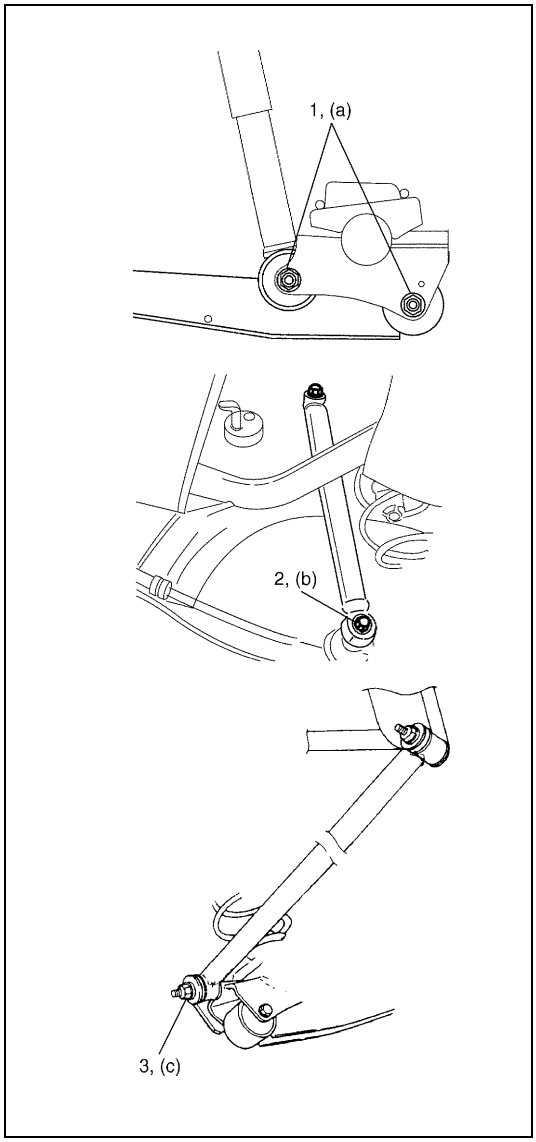

18) Tighten rear trailing arm nuts (1), shock absorber lower bolts (2) and lateral rod left side nut (3) to specified torque (right and left).

Tightening torque
Rear trailing arm nuts (a) : 80 N·m (8.0 kg-m, 58.0 lb-ft)
Rear shock absorber lower bolts
(b) : 58 N·m (5.8 kg-m, 42.0 lb-ft)
Lateral rod left side nut (c) : 50 N·m (5.0 kg-m, 36.5 lb-ft)

19) Check to ensure that brake drum is free from dragging and proper braking is obtained.
20) If equipped with LSPV, check and adjust LSPV spring referring to “LSPV INSPECTION AND ADJUSTMENT” and perform “FLUID PRESSURE TEST” in Section 5.
21) Perform brake operation test (foot brake and parking brake).

WHEEL BEARING AND WHEEL STUD (2WD VEHICLE)

REMOVAL

1) Remove rear brake drum. Refer to “REAR BRAKE DRUM” in Section 5.
2) Remove wheel sensor ring (if equipped with ABS). Refer to “REAR WHEEL SENSOR RING” of Section 5E.

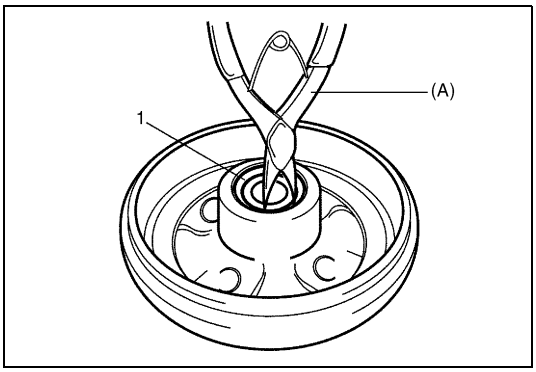

3) Remove bearing circlip (1) using special tool.

Special tool
(A) : 09900-06108

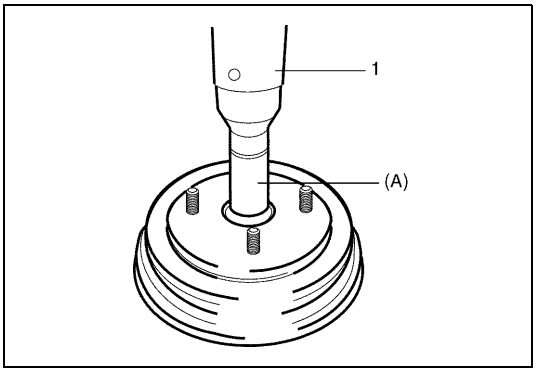

4) Remove wheel bearing using special tool and hydraulic press (1).

Special tool
(A) : 09913-76010

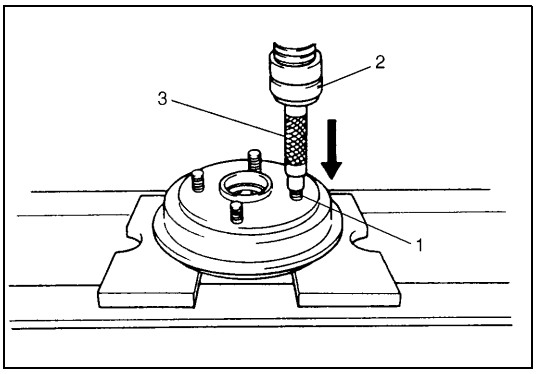

5) Remove wheel stud bolts (1) using hydraulic press (2) and general rod (3).

INSTALLATION

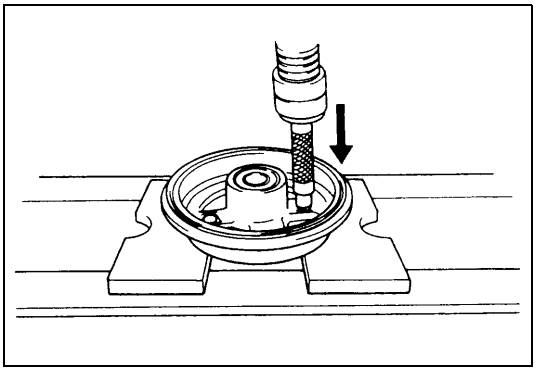

1) Insert new stud in drum hole and rotate it slowly to assure serrations are aligned with those made by replaced bolt.

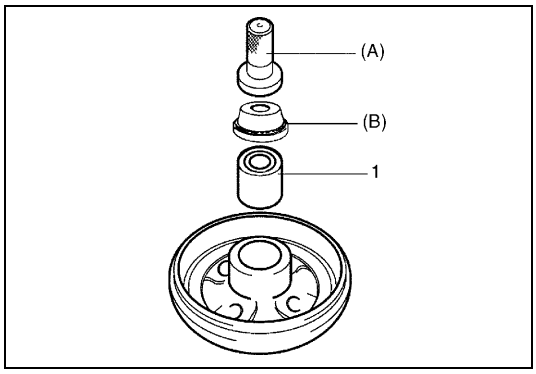

2) Press-fit wheel bearing (1) with it's seal side facing back plate side using special tools and hydraulic press.

Special tool
(A) : 09913-76010
(B) : 09924-84510-004

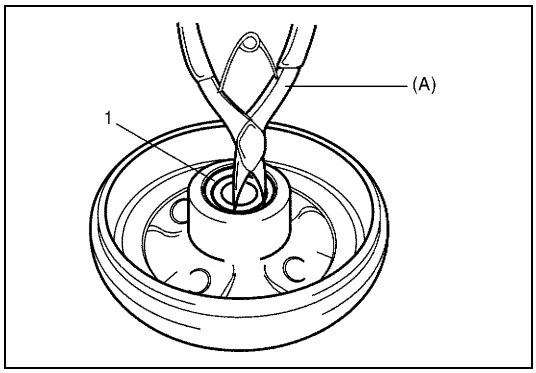

3) Install bearing circlip (1) using special tool.

Special tool
(A) : 09900-06108

4) Install wheel sensor ring (if equipped with ABS).
Refer to "REAR WHEEL SENSOR RING" of Section 5E.
5) Install brake drum and wheel. For details, refer to "REAR BRAKE DRUM" in Section 5.

REAR AXLE SHAFT AND WHEEL BEARING (4WD VEHICLE)

REMOVAL

1) Hoist vehicle and remove rear wheels.

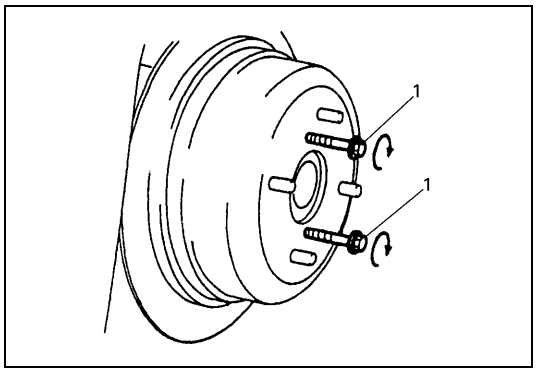

2) Remove rear brake drum. For details referring to Section 5.

1. 8mm bolt

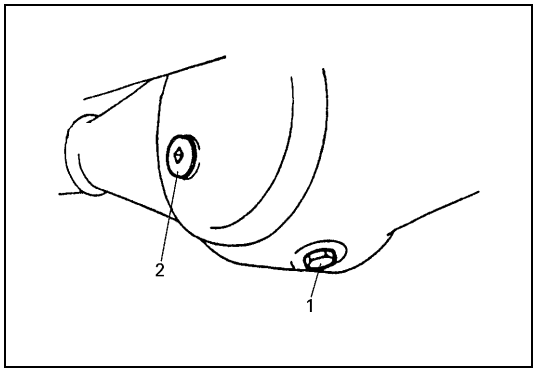

3) Drain gear oil from rear axle housing by loosening drain plug (1).

2. Level plug

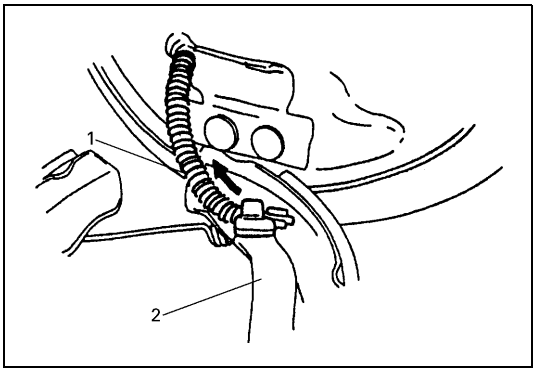

4) Disconnect parking brake cable from parking brake shoe lever (2) and remove parking brake cable (1) from brake back plate.
5) Remove brake back plate bolts from axle housing.

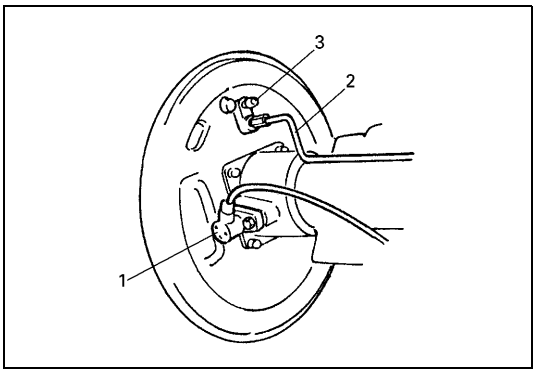

6) Disconnect brake pipe(s) (2) from wheel cylinder and put wheel cylinder bleeder plug (3) cap onto pipe to prevent fluid from spilling.
7) Remove wheel speed sensor (1) from axle housing (if equipped with ABS).

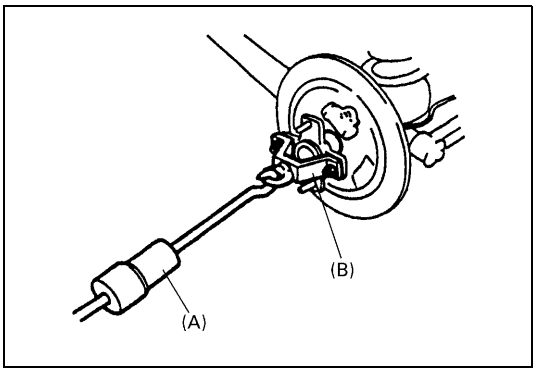

8) Using special tools indicated, draw out axle shaft with brake back plate.

Special tool
(A) : 09942-15510
(B) : 09943-17912

9) Remove wheel sensor ring (if equipped with ABS). Refer to "REAR WHEEL SENSOR RING" of Section 5E.

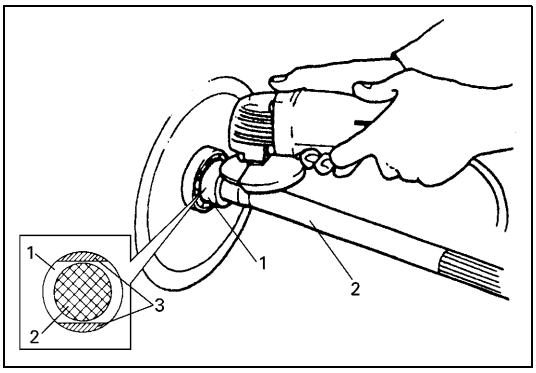

10) In order to remove the retainer ring (1) from the axle shaft (2), grind (3) with a grinder two parts of the bearing retainer ring as illustrated till it becomes thin.

CAUTION:
Be careful not to go so far as to grind the shaft.

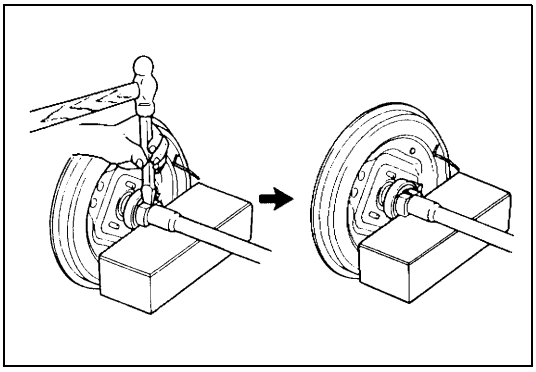

11) Break with a chisel the thin ground retainer ring, and it can be removed.

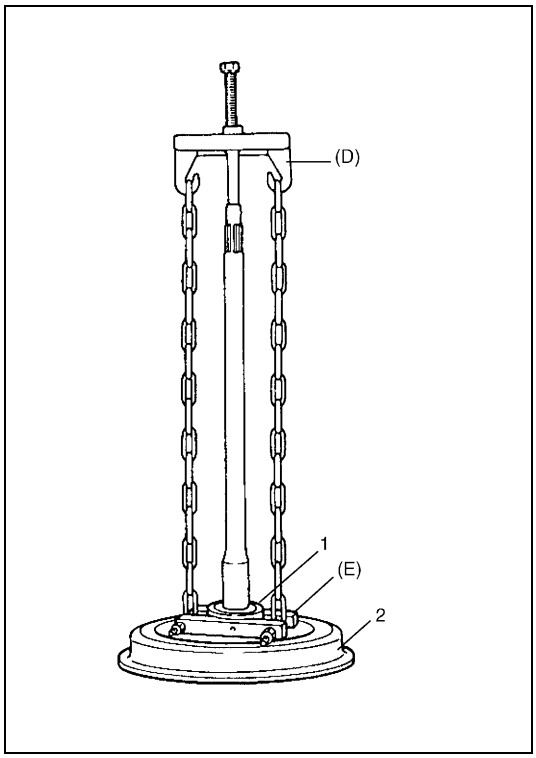

12) Using special tools, remove bearing (1) from shaft and then remove brake back plate (2).

Special tool
(D) : 09927-18411
(E) : 09921-57810

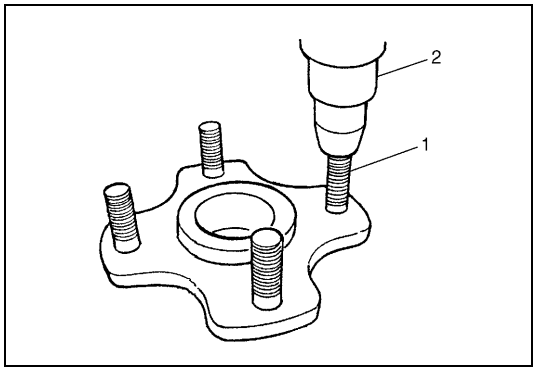

13) Remove stud bolts (1) by using hydraulic press (2).

INSTALLATION

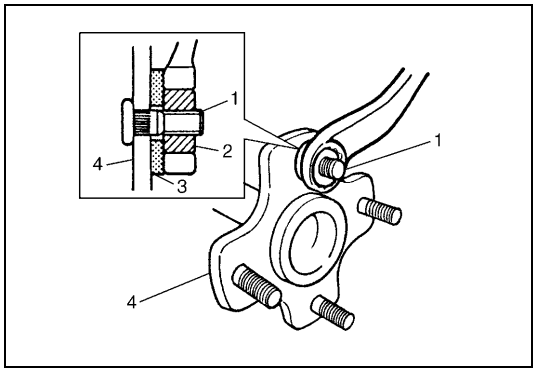

1) Aligning serrations between new stud bolts (1) and flange (4), install new stud bolts by tightening nut as shown.

2.	Nut
3.	Washer

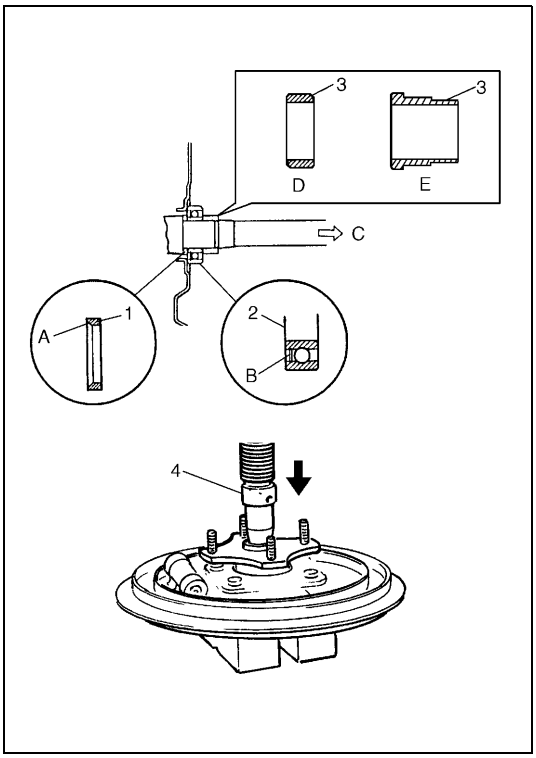

2) Press in a new bearing (2) and retainer ring (3) in order by using an hydraulic press (4).

NOTE:

- **Install wheel bearing spacer (1) with the tapered side of its inner diameter directed toward outside, or brake drum side.**
- **Install wheel bearing with its sealed side directed toward brake drum side.**
- **Use care not to cause any damage to outside of retainer ring.**

3) Install wheel sensor ring (if equipped with ABS).
Refer to "REAR WHEEL SENSOR RING" of Section 5E.

A :	Tapered side
B :	Sealed side
C :	Differential side
D :	Without ABS
E :	With ABS

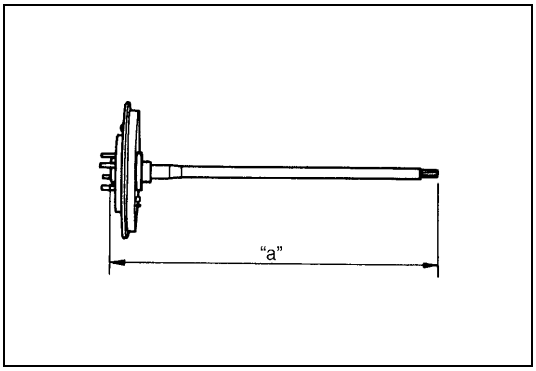

4) Inspect axle shaft length.

Rear axle shaft length "a"
Left side : 657.5 mm (25.9 in.)
Right side : 785.5 mm (30.9 in.)

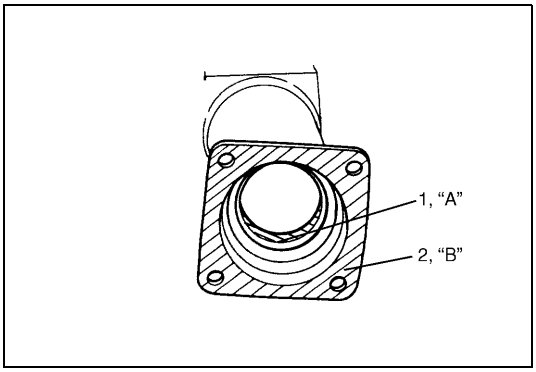

5) Apply grease to axle shaft oil seal (1) lip as shown.

"A" : Grease 99000-25010

6) Apply sealant to mating surface of axle housing (2) with brake back plate.

NOTE:

Make sure to remove old sealant before applying it anew.

"B" : Sealant 99000-31090

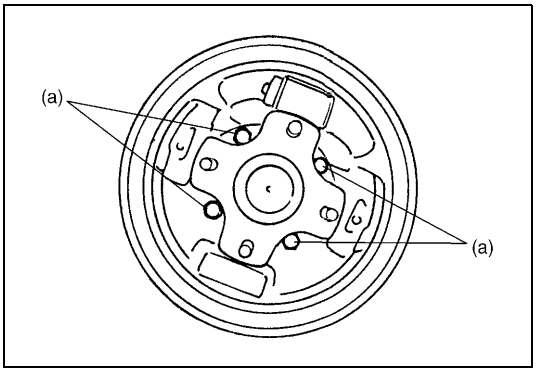

7) Install rear axle shaft to rear axle housing and tighten brake back plate bolts to specified torque.

NOTE:

When installing rear axle shaft, be careful not to cause damage to oil seal lip in axle housing.

Tightening torque
Brake back plate bolts (a) : 23 N·m (2.3 kg-m, 17.0 lb-ft)

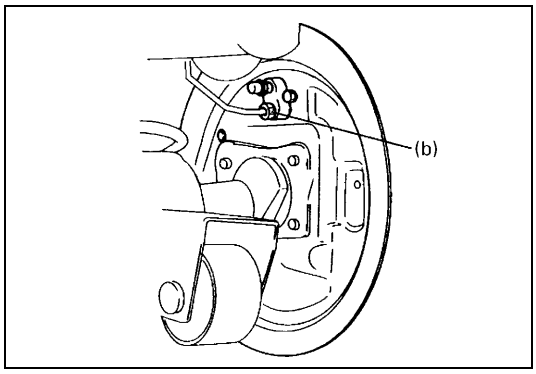

8) Connect brake pipe to wheel cylinder and tighten brake pipe flare nut to specified torque.

Tightening torque
Brake pipe flare nut (b) : 16 N·m (1.6 kg-m, 11.5 lb-ft)

9) Refill rear axle (differential) housing with new specified gear oil. Refer to Section 7F for refill.
10) Install brake drum. For details, refer to “BRAKE DRUM” of Section 5.

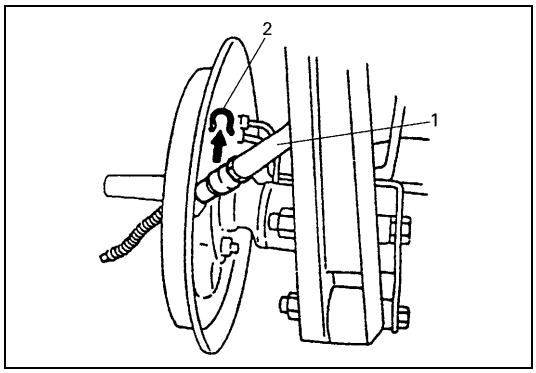

11) Connect parking brake cable (1) to parking brake shoe lever. Secure parking brake cable to brake back plate with clip (2). Install wheel speed sensor (if equipped with ABS).

CAUTION:
Check to ensure that clip is in good condition before installing it. If deformed or broken, replace.

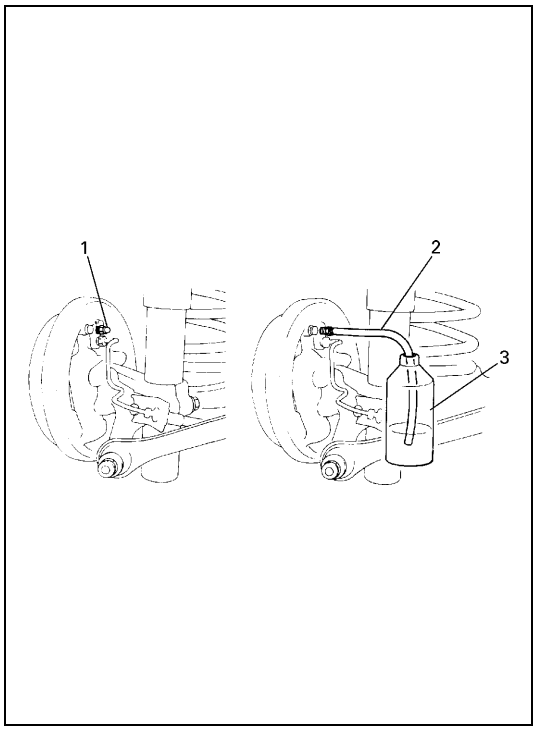

12) Fill reservoir with brake fluid and bleed brake system. (For bleeding operation, refer to “BLEEDING BRAKES” in Section 5.)
13) Install wheel and tighten wheel nuts to specified torque.
14) Upon completion of all jobs, pull parking brake lever with about 20 kg, (44 lbs) load three to five times so as to obtain proper drum-to-shoe clearance.
    Adjust parking brake cable (for adjustment, refer to “PARKING BRAKE INSPECTION AND ADJUSTMENT” in Section 5).
15) Check to ensure that brake drum is free from dragging and proper braking is obtained.
16) Perform brake test (foot brake and parking brake).
    (For brake test, see Section 5.)
17) Check each installed part for oil leakage.

1. Plug cap
2. Vinyl tube (See-through tube)
3. Container

REAR AXLE SHAFT OIL SEAL (4WD VEHICLE)

REMOVAL

1) Remove rear axle shaft. For details, refer to steps 1) to 8) of “REAR AXLE SHAFT AND WHEEL BEARING” in this section.

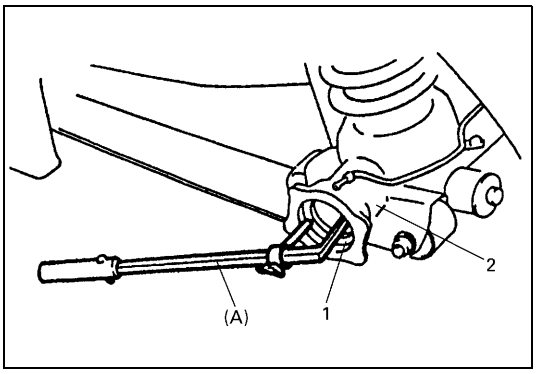

2) Remove rear axle shaft oil seal (1) by using special tool.

Special tool
(A) : 09913-50121

2. Axle housing

INSTALLATION

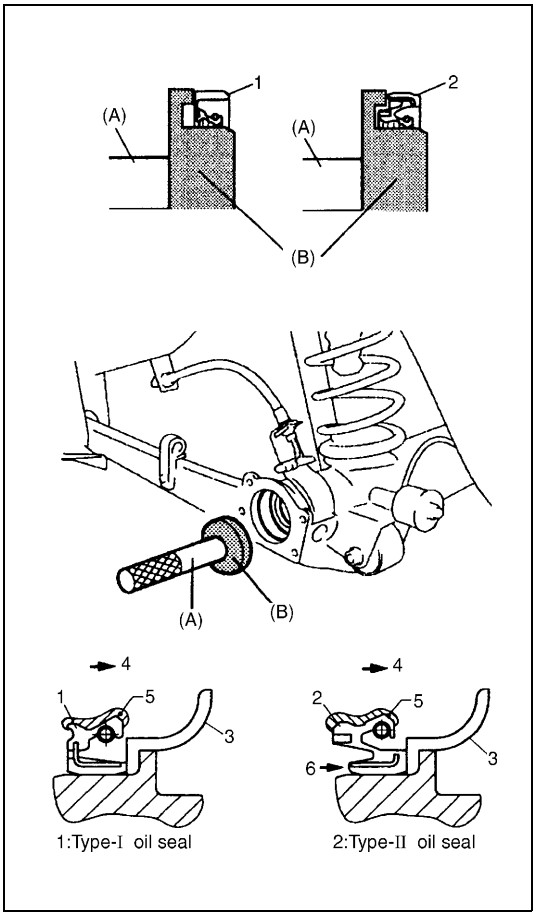

1) Using special tools, drive in oil seal (1) or (2) until it contacts oil seal protector (3) in axle housing.

NOTE:

- **There are 2 types of oil seal ((1) & (2)). Their shapes are different as shown in the figure but they are both usable.**
- **Special Tool (B) can be used for both oil seals (1) and (2).**
- **Make sure that oil seal is free from inclination as it is installed.**
- **Refer to the figure to check that oil seal is installed in proper direction.**

CAUTION:
When installing oil seal (2), never hit any part other than the position indicated as (6) in the figure. Make sure to use special tools indicated below. Failure to observe this caution will cause oil seal to be deformed and oil leakage to occur.

Special tools
(A) : 09924-74510
(B) : 09944-67010
"A" : Grease 99000-25010

4. Differential side
5. Apply grease here
6. Press-fitting point

2) For procedure hereafter, refer to steps 5) to 7) of "REAR AXLE SHAFT AND WHEEL BEARING" in this section.

REAR AXLE HOUSING (4WD VEHICLE)

REMOVAL

1) Hoist vehicle.
2) Remove rear axle shaft referring to item 2) to 8) of "REAR AXLE SHAFT AND WHEEL BEARING" in this section.
3) Disconnect brake pipe from flexible hose and remove E-ring.
4) Remove brake pipe clamps and pipes from axle housing.
5) Remove parking brake cable clamps and disconnect parking brake cable from axle housing.
6) Remove wheel speed sensor and release clamps from axle housing (if equipped with ABS).
7) Remove LSPV adjust nut and detach spring end from rear axle housing (if equipped with LSPV).

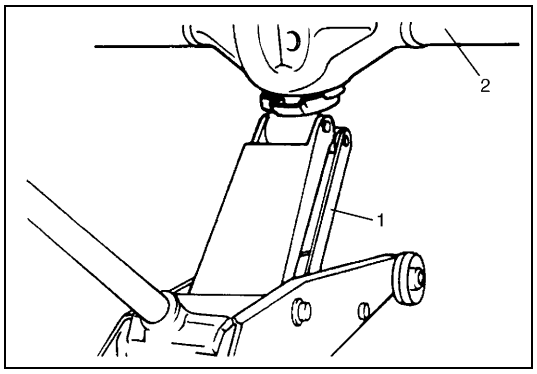

8) For jobs hereafter, support rear axle housing by using floor jack (1) under axle housing (2).

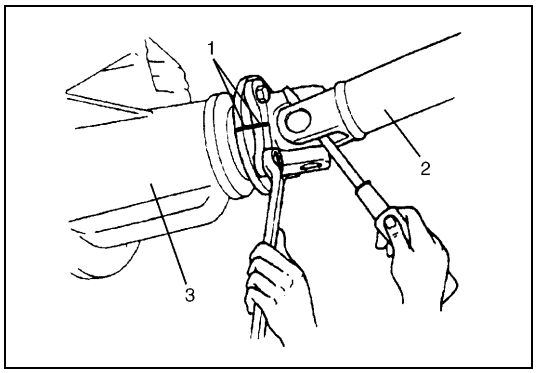

9) Before removing propeller shaft, give match marks (1) on joint flange and propeller shaft (2) as shown.
   Remove propeller shaft.
10) Remove differential carrier assembly (3).

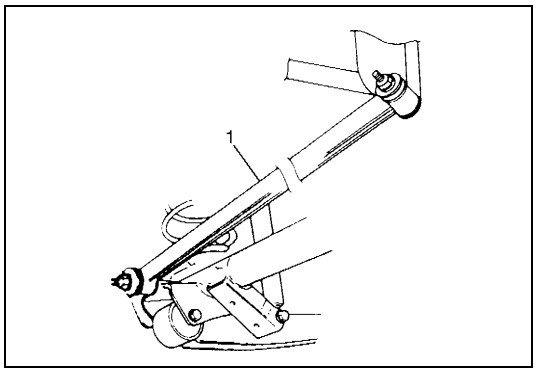

11) Remove lateral rod (1).

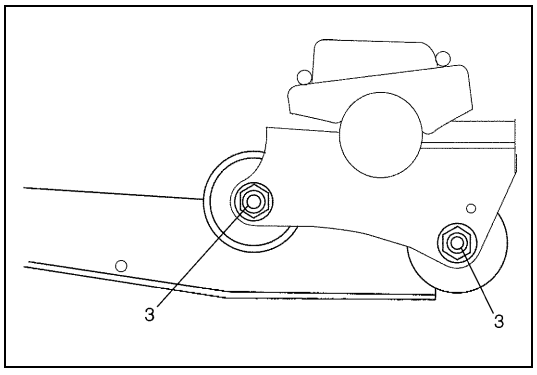

12) Loosen front and rear mounting nuts (3) of trailing arm but don't remove bolts.

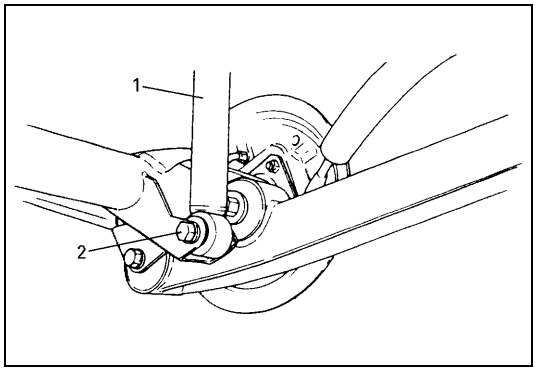

13) Remove shock absorber (1) lower mounting bolt (2).
14) Lower floor jack until tension of suspension coil spring becomes a little loose and remove rear mount bolts of trailing arm.
15) Lower rear axle housing gradually and remove coil spring.

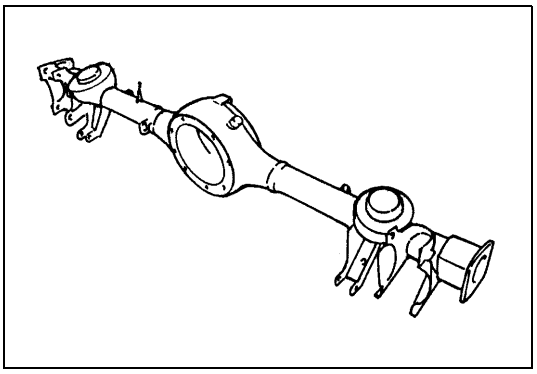

16) Remove axle housing.

INSTALLATION

Install removed parts in reverse order of removal, noting the following.

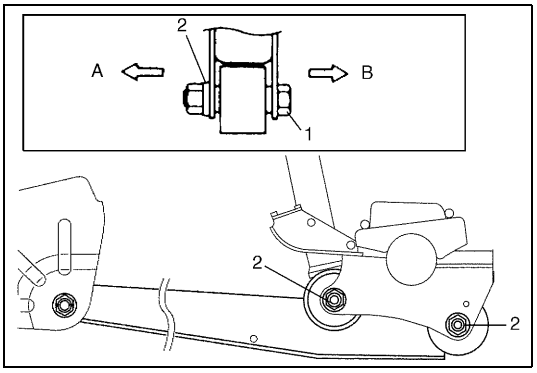

1) Place rear axle housing on floor jack. Then install rear trailing arm bolts (1) (right & left) in proper direction as shown. At this time, mount nuts (2) but don't tighten them.

A : Vehicle out side
B : Vehicle center side

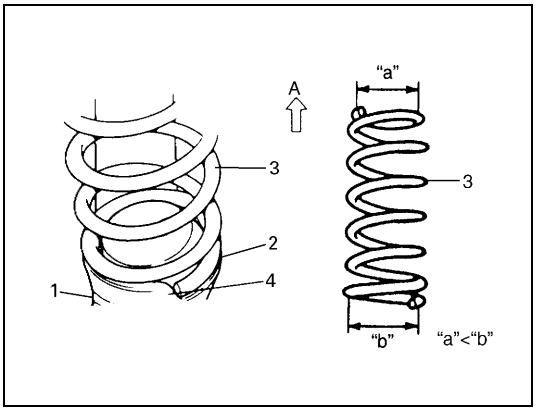

2) Install coil springs (3) (right & left) on spring seat (2) of axle housing (1) and raise axle housing.

NOTE:

Upper and lower diameters of coil spring are different. Bring lager diameter end at bottom and set its open end in place on spring seat.

4. Stopped part
A : Upper side

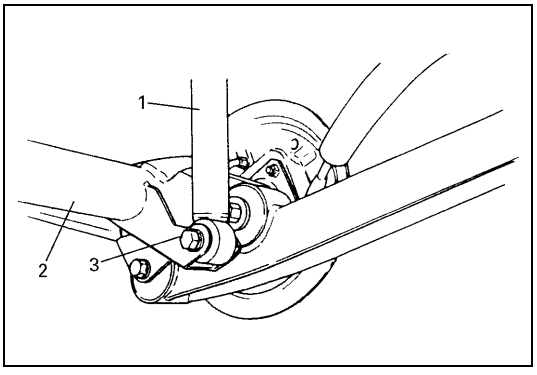

3) Install lower part of shock absorber (1) to right and left sides of axle housing and install bolts in proper direction as shown. At this time, mount bolts (3) (right & left) but don't tighten them.

2. Rear axle housing

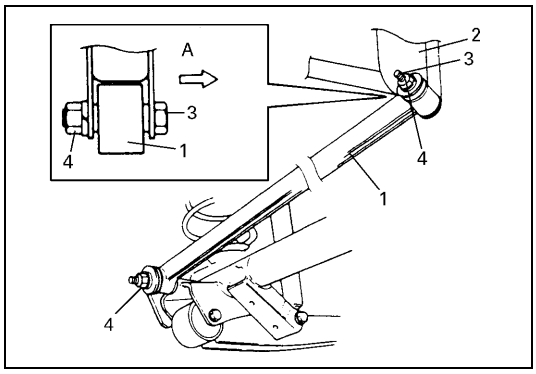

4) Install lateral rod (1) and install bolt (3) in proper direction as shown. At this time, mount bolt and nut (4) but don't tighten them.

2. Vehicle body
A : Forward

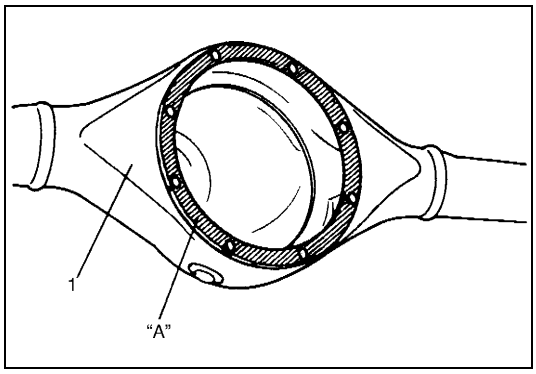

5) Clean mating surfaces of axle housing (1) and differential carrier and apply sealant to housing side.

"A" : Sealant 99000-31110

6) Install differential carrier assembly to axle housing and tighten carrier nuts to specified torque.

Tightening torque
Rear differential carrier nuts : 23 N·m (2.3 kg-m, 17.0 lb-ft)

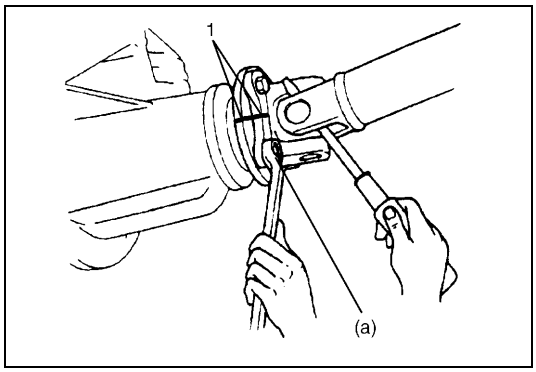

7) Install propeller shaft to joint flange aligning match marks (1) and tighten flange bolts to specified torque.

Tightening torque
Companion flange bolts (a) : 23 N·m (2.3 kg-m, 17.0 lb-ft)

8) Install LSPV spring to rear axle.
   Tighten LSPV adjust nut temporarily at this step. (if equipped with LSPV).
9) Install wheel speed sensor and clamp wire securely (right & left) (if equipped with ABS).
10) Remove floor jack from axle housing.
11) Connect brake pipes and parking brake cable and clamp them securely.
    For clamping positions, refer to Section 5.
12) Connect brake flexible hose to bracket and secure it with E-ring.

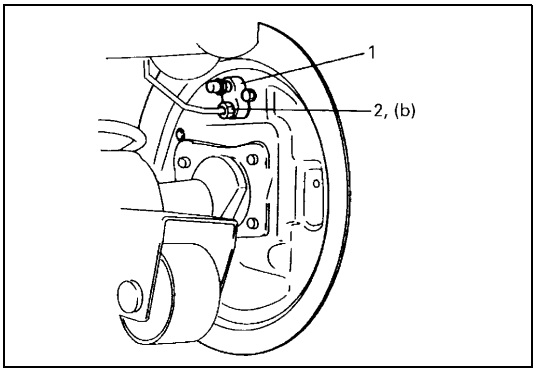

13) Connect brake pipe to wheel cylinder (1) and tighten brake pipe flare nut (2) to specified torque.

Tightening torque
Brake pipe flare nut (b) : 16 N·m (1.6 kg-m, 11.5 lb-ft)

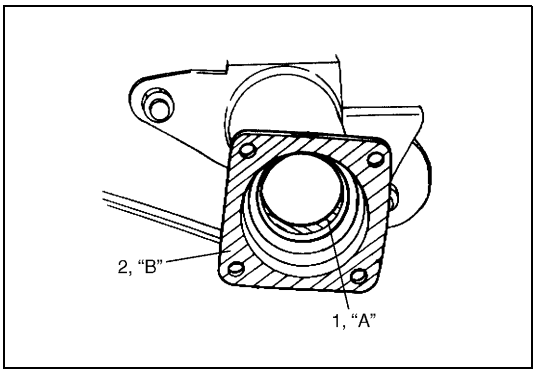

14) Clean mating surface of axle housing (2) (right & left) with brake back plate and apply sealant as shown.

"B" : Sealant 99000-31090

15) Apply grease to axle shaft oil seals (1) lip (right & left) as shown.

"A" : Grease 99000-25010

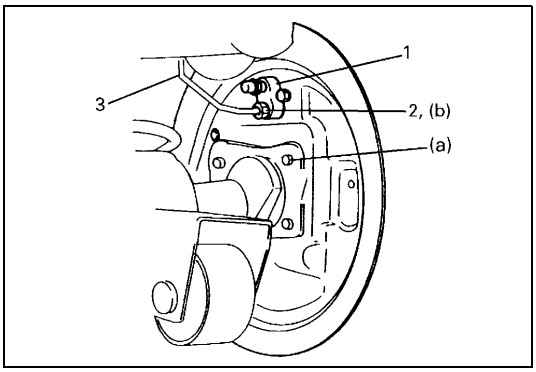

16) Install rear axle shaft (right & left) to rear axle housing and tighten brake back plate bolts to specified torque.

Tightening torque
Brake back plate bolts (a) : 23 N·m (2.3 kg-m, 17.0 lb-ft)

17) Connect brake pipes (3) to wheel cylinders (1) (right & left) and tighten brake pipe flare nuts (2) to specified torque.

Tightening torque
Brake pipe flare nuts (b) : 16 N·m (1.6 kg-m, 11.5 lb-ft)

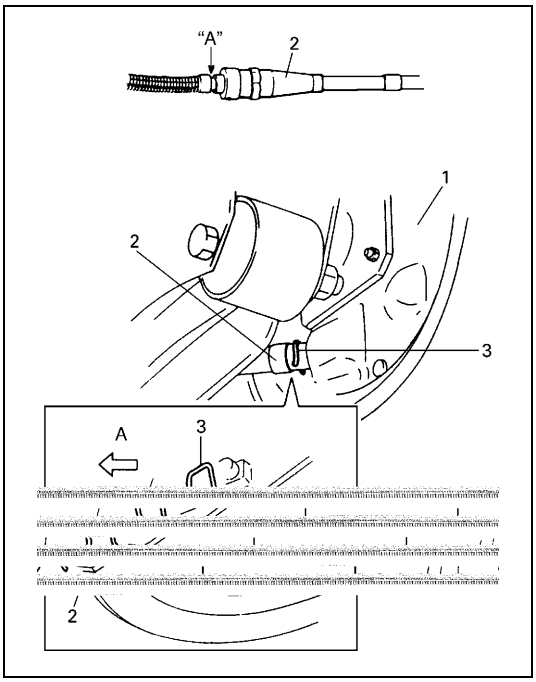

18) Connect parking brake cable (2) to parking brake shoe lever (right & left) and secure it with clip (3).
Apply water tight sealant where brake back plate (1) and parking brake cable contact.

"A" : Sealant 99000-31090

NOTE:

Check to ensure that clip is in good condition before installing it. If deformed or broken, replace.

19) Fill reservoir with brake fluid and bleed brake system. (For bleeding operation, see Section 5.)
20) Refill differential gear housing with new specified gear oil. Refer to Section 7F.

A : Forward

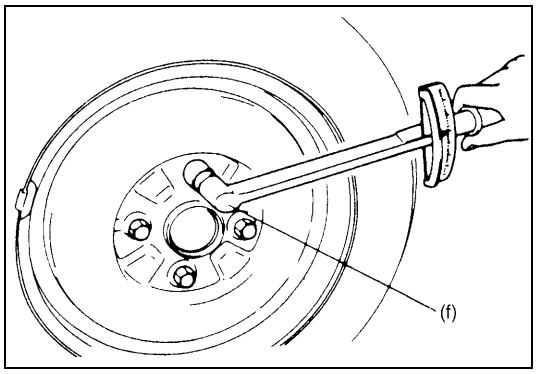

21) Install wheel and tighten wheel nuts to specified torque.

Tightening torque
Wheel nuts (f) : 85 N·m (8.5 kg-m, 61.5 lb-ft)

22) Upon completion of all jobs, pull parking brake lever with about 20 kg, (44 lbs) load three to five times so as to obtain proper drum-to-shoe clearance.
Adjust parking brake cable (for adjustment, see Section 5.)
23) Lower hoist.

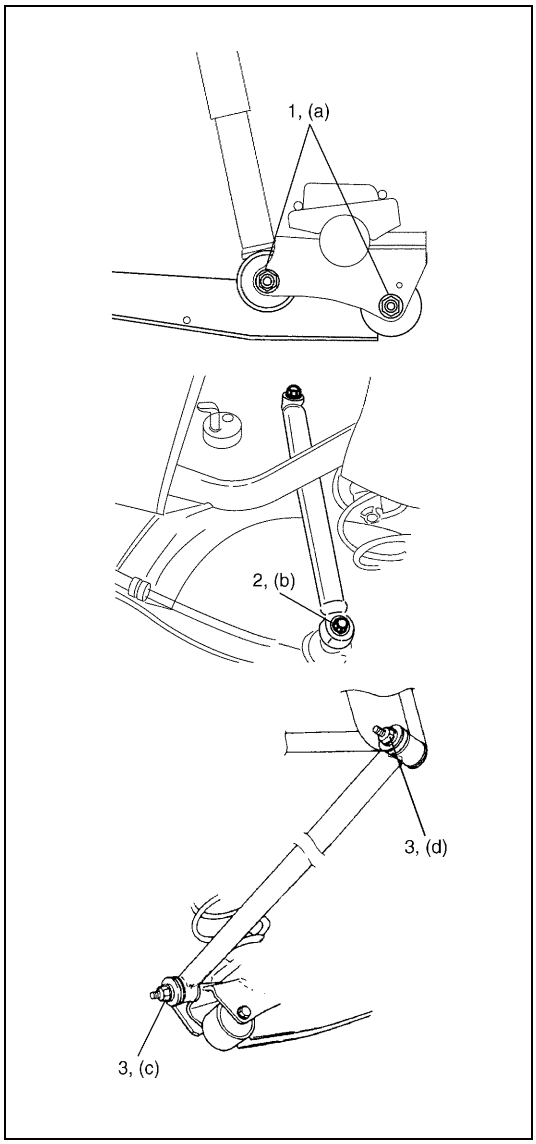

24) Tighten right and left trailing arm bolts and nuts (1) and shock absorber lower bolts (2) to specified torque.
Tighten lateral rod bolt and nut (3) to specified torque.

NOTE:

When tightening these bolts and nuts, be sure that vehicle is off hoist and in non loaded condition.

Tightening torque
Rear trailing arm bolts (a) : 80 N·m (8.0 kg-m, 58.0 lb-ft)
Rear shock absorber lower bolts
(b) : 58 N·m (5.8 kg-m, 42.0 lb-ft)
Lateral rod axle housing side nut
(c) : 50 N·m (5.0 kg-m, 36.5 lb-ft)
Lateral rod body side nut (d) : 65 N·m (6.5 kg-m, 47.0 lb-ft)

25) Check to ensure that brake drum is free from dragging and proper braking is obtained.
26) Perform brake test (foot brake and parking brake).
(For brake test, see Section 5.)
27) If equipped with LSPV, check and adjust LSPV spring referring to “LSPV INSPECTION AND ADJUSTMENT” and perform “FLUID PRESSURE TEST” in Section 5.
28) Check each installed part for oil leakage.

REQUIRED SERVICE MATERIAL

Material	Recommended SUZUKI product (Part Number)	Use
Lithium grease	SUZUKI SUPER GREASE (A) (99000-25010)	• Axle shaft oil seal • Wheel bearing
Sealant	SUZUKI BOND NO. 1215 (99000-31110)	• Joint seam of differential carrier and axle housing
Gear oil	For gear oil information, refer to Section 7F.	• Differential gear (Rear axle housing)
Water tight sealant	SUZUKI SEALING COMPOUND 366E (99000-31090)	• Joint seam of axle housing (4WD) or rear axle (2WD) and brake back plate

SPECIAL TOOL

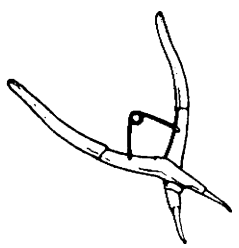 09900-06108 Snap ring pliers	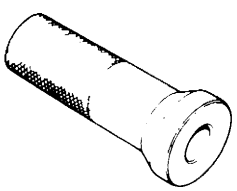 09913-76010 Rear wheel bearing installer	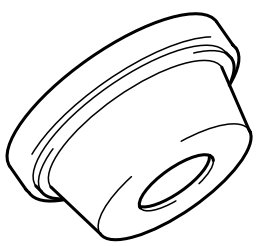 09924-84510-004 Bearing installer attachment	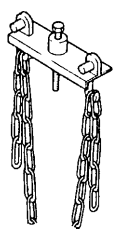 09927-18411 Universal puller
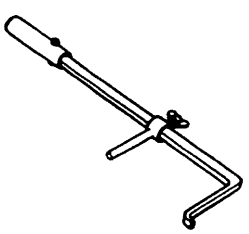 09913-50121 Oil seal remover	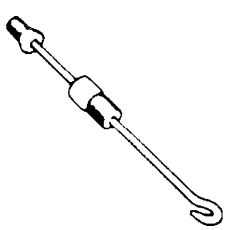 09942-15510 Sliding hammer	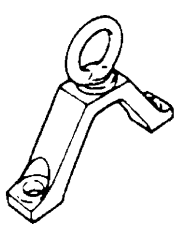 09943-17912 Brake drum remover	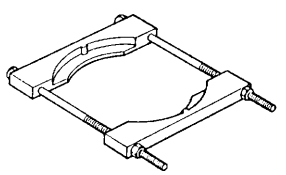 09921-57810 Bearing remover
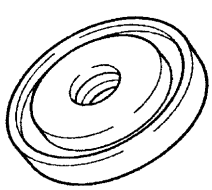 09944-67010 Oil seal installer	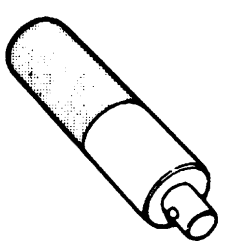 09924-74510 Bearing installer handle		

SECTION 3F

WHEELS AND TIRES

NOTE:

All wheel fasteners are important attaching parts in that they could affect the performance of vital parts and systems, and/or could result in major repair expense. They must be replaced with one of the same part number or with an equivalent part if replacement becomes necessary. Do not use a replacement part of lesser quality or substitute design. Torque values must be used as specified during reassembly to assure proper retention of all parts.

There is to be no welding as it may result in extensive damage and weakening of the metal.

CONTENTS

GENERAL DESCRIPTION 3F-2
- TIRES 3F-2
- WHEELS 3F-2
- REPLACEMENT TIRES 3F-2
- REPLACEMENT WHEELS 3F-2
  - HOW TO MEASURE WHEEL RUNOUT ... 3F-3
  - METRIC LUG NUTS AND WHEEL STUDS 3F-3

DIAGNOSIS 3F-3
- DIAGNOSIS TABLE 3F-3
- BALANCING WHEELS 3F-3
- GENERAL BALANCE PROCEDURES 3F-4
  - OFF-VEHICLE BALANCING 3F-4
  - ON-VEHICLE BALANCING 3F-4

MAINTENANCE AND MINOR ADJUSTMENTS 3F-5
- WHEEL MAINTENANCE 3F-5
  - WHEEL ATTACHING STUDS 3F-5
  - MATCHED TIRES AND WHEELS 3F-5
- TIRE MAINTENANCE 3F-5
  - TIRE PLACARD 3F-5
  - INFLATION OF TIRES 3F-6
  - TIRE ROTATION 3F-6

ON-VEHICLE SERVICE 3F-7
- WHEEL 3F-7
- TIRE 3F-8
  - MOUNTING AND DISMOUNTING 3F-8
  - REPAIR 3F-8

GENERAL DESCRIPTION

TIRES

This vehicle is equipped with the following tire.

Tire size
: 165/70R14

The tire is of tubeless type. The tire is designed to operate satisfactorily with loads up to the full rated load capacity when inflated to the recommended inflation pressures.
Correct tire pressures and driving habits have an important influence on tire life. Heavy cornering, excessively rapid acceleration, and unnecessary sharp braking increase tire wear.

WHEELS

Standard equipment wheels are the following steel wheel.

Wheel size
: 14 x 4 1/2 J

REPLACEMENT TIRES

When replacement is necessary, the original equipment type tire should be used. Refer to the “Tire Placard”. Replacement tires should be of the same size, load range and construction as those originally on the vehicle. Use of any other size or type tire may affect ride, handling, speedometer/odometer calibration, vehicle ground clearance and tire or snow chain clearance to the body and chassis.
It is recommended that new tires be installed in pairs on the same axle. If necessary to replace only one tire, it should be paired with the tire having the most tread, to equalize braking traction.

WARNING:
Do not mix different types of tires on the same vehicle such as radial, bias and bias-belted tires except in emergencies, because handling may be seriously affected and may result in loss of control.

kPa	kgf/cm²	pis
160	1.6	23
180	1.8	26
200	2.0	29
220	2.2	32
240	2.4	35
260	2.6	38
280	2.8	41
300	3.0	44

The metric term for tire inflation pressure is the kilo pascal (kPa). Tire pressures is usually printed in both kPa and psi on the “Tire Placard”.
Metric tire gauges are available from tool suppliers.
The chart, shown the table, converts commonly used inflation pressures from kPa to psi.

REPLACEMENT WHEELS

Wheels must be replaced if they are bent, dented, have excessive lateral or radial runout, air leak through welds, have elongated bolt holes, if lug nuts won’t stay tight, or if they are heavily rusted. Wheels with greater runout than shown in figure below may cause objectional vibrations.
Replacement wheels must be equivalent to the original equipment wheels in load capacity, diameter, rim with offset and mounting configuration. A wheel of improper size or type may affect wheel and bearing life, brake cooling, speedometer/odometer calibration, vehicle ground clearance and tire clearance to body and chassis.

HOW TO MEASURE WHEEL RUNOUT

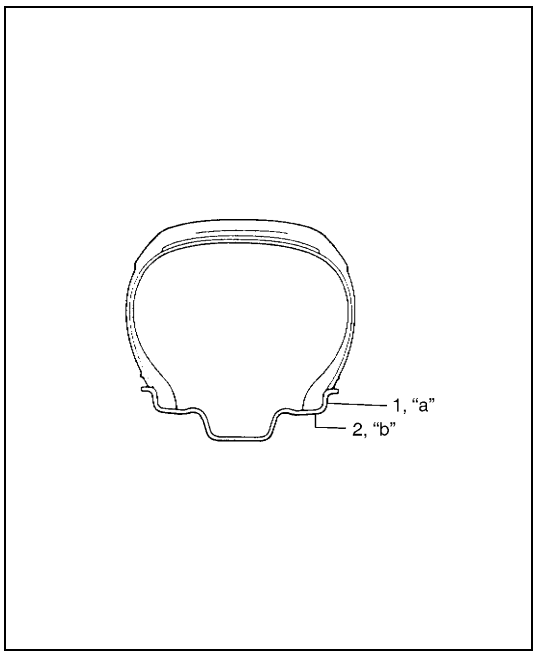

To measure the wheel runout, it is necessary to use an accurate dial indicator. The tire may be on or off the wheel. The wheel should be installed to the wheel balancer of the like for proper measurement.
Take measurements of both lateral runout (1) and radial runout (2) at both inside and outside of the rim flange. With the dial indicator set in place securely, turn the wheel one full revolution slowly and record every reading of the indicator.
When the measured runout exceeds the specification and correction by the balancer adjustment is impossible, replace the wheel. If the reading is affected by welding, paint or scratch, it should be ignored.

Lateral runout limit
“a” : 0.90 mm (0.035 in.)
Radial runout limit
“b” : 0.70 mm (0.028 in.)

METRIC LUG NUTS AND WHEEL STUDS

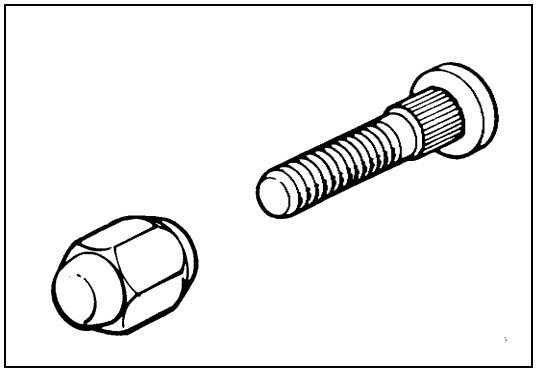

All models use metric lug nuts and wheel studs.

Metric lug nuts and wheel studs size
: M12 x 1.25

DIAGNOSIS

DIAGNOSIS TABLE

Refer to Section 3.

BALANCING WHEELS

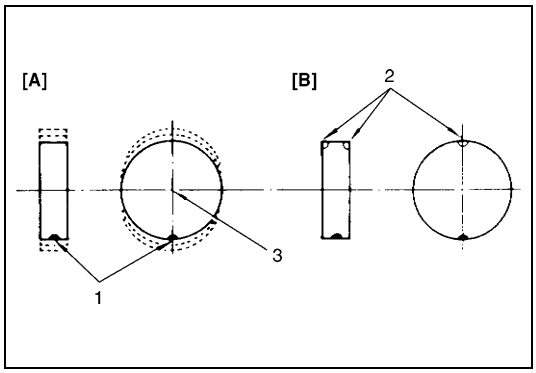

There are two types of wheel and tire balance : static and dynamic. Static balance, as shown in left figure, is the equal distribution of weight around the wheel. Wheels that are statically unbalanced cause a bouncing action called tramp. This condition will eventually cause uneven tire wear.

1. Heavy spot wheel tramp	[A] : Before correction
2. Balance weights addition point	[B] : Corrective weights
3. C/L of spindle	

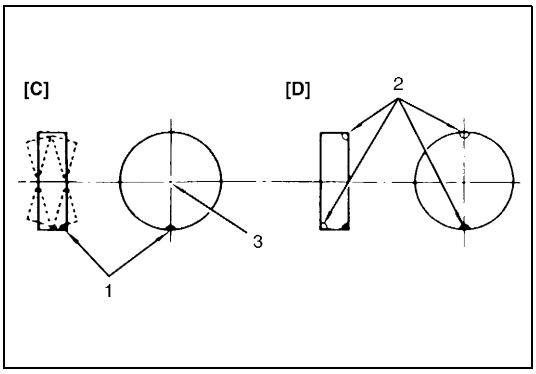

Dynamic balance, as shown in left figure, is the equal distribution of weight on each side of the wheel centerline so that when the tire spins there is no tendency for the assembly to move from side to side. Wheels that are dynamically unbalanced may cause shimmy.

1. Heavy spot wheel shimmy	[C] : Before correction
2. Balance weights addition point	[D] : Corrective weights
3. C/L of spindle	

GENERAL BALANCE PROCEDURES

Deposits of mud, etc. must be cleaned from inside of rim.

WARNING:

Stones should be removed from the tread in order to avoid operator injury during spin balancing and to obtain good balance.

Each tire should be inspected for any damage, then balanced according to equipment manufacturer's recommendation.

OFF-VEHICLE BALANCING

Most electronic off-vehicle balancers are more accurate than the on-vehicle spin balancers. They are easy to use and give a dynamic (two plane) balance. Although they do not correct for drum or disc unbalance as does on-vehicle spin balancing, this is overcome by their accuracy, usually to within 1/8 ounce.

ON-VEHICLE BALANCING

On-vehicle balancing methods vary with equipment and tool manufacturers. Be sure to follow each manufacturer's instructions during balancing operation.

WARNING:

Wheel spin should be limited to 35 mph (55 km/h) as indicated on speedometer.
This limit is necessary because speedometer only indicates one-half of actual wheel speed when one drive wheel is spinning and the other drive wheel is stopped.
Unless care is taken in limiting drive wheel spin, spinning wheel can reach excessive speeds. This can result in possible tire disintegration or differential failure, which could cause serious personal injury or extensive vehicle damage.

CAUTION:

For vehicle equipped with ABS, using on-vehicle balancing method with ignition switch ON may set malfunction diagnostic trouble code (DTC) of ABS even when system is in good condition.
Never turn ignition switch ON while spinning wheel.

MAINTENANCE AND MINOR ADJUSTMENTS

WHEEL MAINTENANCE

Wheel repairs that use welding, heating, or peening are not approved. All damaged wheels should be replaced.

WHEEL ATTACHING STUDS

If a broken stud is found, see Section 3E (rear) or Section 3D (front) for Note and Replacement procedure.

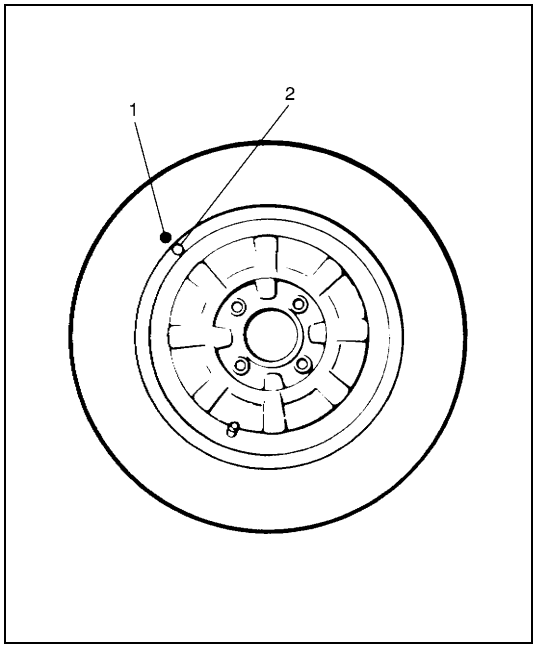

MATCHED TIRES AND WHEELS

Tires and wheels are match mounted at the assembly plant.
This means that the radially stiffest part of the tire, or “high spot”, is matched to the smallest radius or “low spot” of the wheel.
This is done to provide the smoothest possible ride.
The “high spot” of the tire is originally marked by paint dot (1) on the outboard sidewall. This paint dot will eventually wash off the tire.
The “ow spot” of the wheel is originally marked by paint dot (2) on the wheel rim-flange. Properly assembled, the wheel rims’ paint dot should be aligned with the tires’ paint dot as shown in left figure.
Whenever a tire is dismounted from its wheel, it should be remounted so that the tire and wheel are matched. If the tire’s paint dot cannot be located, a line should be scribed on the tire and wheel before dismounting to assure that it is remounted in the same position.

TIRE MAINTENANCE

TIRE PLACARD

The “Tire Placard” is located on the left door (right door for right-hand side steering vehicle) lock pillar and should be referred to tire information.
The placard lists the maximum load, tire size and cold tire pressure where applicable.

NOTE:

Whether rim size and/or maximum load are listed or not depends on regulations of each country.

INFLATION OF TIRES

The pressure recommended for any model is carefully calculated to give a satisfactory ride, stability, steering, tread wear, tire life and resistance to bruises.
Tire pressure, with tires cold, (after vehicle has set for 3 hours or more, or driven less than one mile) should be checked monthly or before any extended trip. Set to the specifications on the “Tire Placard” located on the left door (right door for right-hand side steering vehicle) lock pillar.
It is normal for tire pressure to increase when the tires become hot during driving.
Do not bleed or reduce tire pressure after driving. Bleeding reduces the “Cold Inflation Pressure”.

Higher than recommended pressure can cause :

- Hard ride
- Tire bruising or carcass damage
- Rapid tread wear at center of tire

Unequal pressure on same axle can cause :

- Uneven braking
- Steering lead
- Reduced handling
- Swerve on acceleration

Lower than recommended pressure can cause :

- Tire squeal on turns
- Hard Steering
- Rapid and uneven wear on the edges of the tread
- Tire rim bruises and rupture
- Tire cord breakage
- High tire temperature
- Reduced handling
- High fuel consumption

TIRE ROTATION

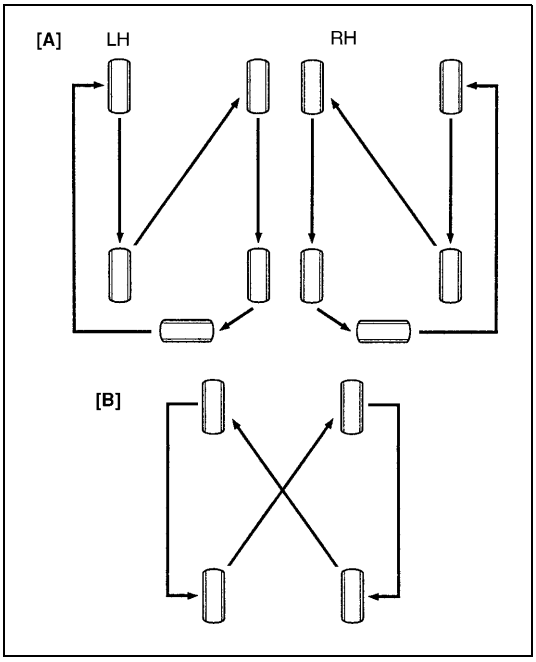

To equalize wear, rotate tires according to left figure. Radial tires should be rotated periodically. Set tire pressure.

NOTE:

Due to their design, radial tires tend to wear faster in the shoulder area, particularly in front positions. This makes regular rotation especially necessary.

[A] : 5-tire rotation
[B] : 4-tire rotation
LH : Left-hand drive
RH : Right-hand drive

ON-VEHICLE SERVICE

WHEEL

REMOVAL

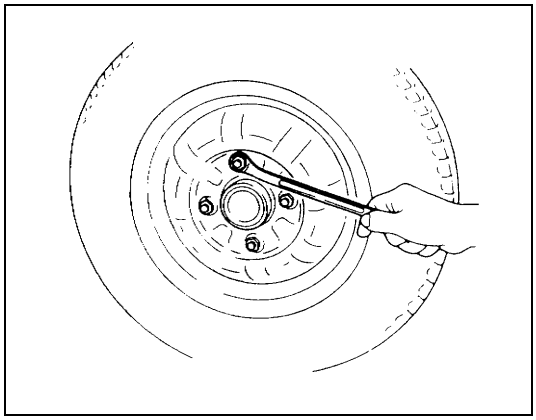

1) Loosen wheel nuts by approximately 180° (half a rotation).
2) Hoist vehicle.
3) Remove wheel.

CAUTION:
Never use heat to loosen tight wheel because application of heat to wheel can shorten life of wheel and damage wheel bearings.

INSTALLATION

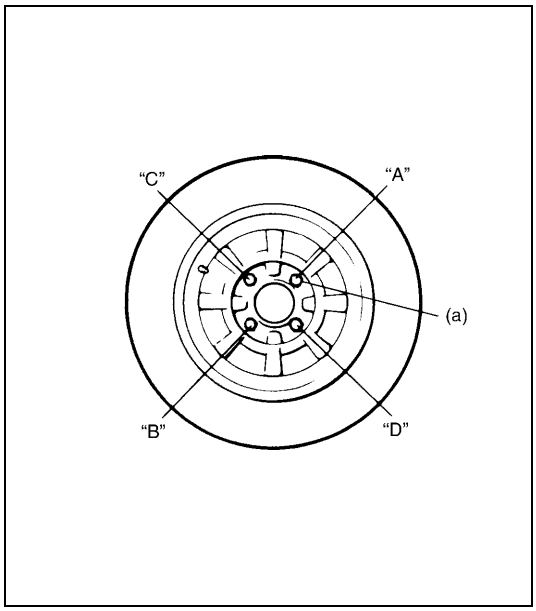

For installation, reverse removal procedure, noting the followings.

- Wheel nuts must be tightened in sequence and to proper torque to avoid bending wheel or brake disc.

NOTE:
Before installing wheels, remove any build-up of corrosion on wheel mounting surface and brake disc mounting surface by scraping and wire brushing. Installing wheels without good metal-to-metal contact at mounting surfaces can cause wheel nuts to loosen, which can later allow a wheel to come off while vehicle is moving.

Tightening order
: "A"-"B"-"C"-"D"

Tightening torque
Wheel nut (a) : 85 N·m (8.5 kg-m, 61.5 lb-ft)

TIRE

MOUNTING AND DISMOUNTING

Use a tire changing machine to mount or dismount tires. Follow equipment manufacturer's instructions. Do not use hand tools or tire irons alone to change tires as they may damage tire beads or wheel rim.
Rim bead seats should be cleaned with a wire brush or coarse steel wool to remove lubricants, old rubber and light rust. Before mounting or dismounting a tire, bead area should be well lubricated with approved tire lubricant.
After mounting, inflate to specified pressure shown on tire placard so that beads are completely seated.

WARNING:
Do not stand over tire when inflating. Bead may break when bead snaps over rim's safety hump and cause serious personal injury.
Do not exceed specified pressure when inflating. If specified pressure will not seat beads, deflate, relubricate and reinflate.
Over inflation may cause bead to break and cause serious personal injury.

Install valve core and inflate to proper pressure.

REPAIR

There are many different materials and techniques on the market to repair tires. As not all of these work on all types of tires, tire manufacturers have published detailed instructions on how and when to repair tires. These instructions can be obtained from each tire manufacturer.

SECTION 4A

FRONT DRIVE SHAFT

CONTENTS

GENERAL DESCRIPTION 4A-2
COMPONENT 4A-2
DIAGNOSIS 4A-2
DIAGNOSIS TABLE 4A-2
DRIVE SHAFT BOOT CHECK 4A-2
ON-VEHICLE SERVICE 4A-3
DRIVE SHAFT ASSEMBLY 4A-4
TIGHTENING TORQUE SPECIFICATION 4A-16
REQUIRED SERVICE MATERIAL 4A-16
SPECIAL TOOL 4A-16

GENERAL DESCRIPTION

COMPONENT

A constant velocity ball joint is used on the wheel side of front drive shaft. For right side drive shaft of 2WD vehicle, a constant velocity tripod joint on the differential side. For left side drive shaft of every type vehicles and right side drive shaft of 4WD vehicle, a constant velocity double offset joint is used on the differential or transfer side. The drive shaft can slide through the tripod joint or the double offset joint in the extension/contraction direction.

DIAGNOSIS

DIAGNOSIS TABLE

Condition	Possible Cause	Correction
Abnormal Noise	• Worn or breakage drive shaft joint	Replace.
	• Worn or breakage center bearing	Replace.

DRIVE SHAFT BOOT CHECK

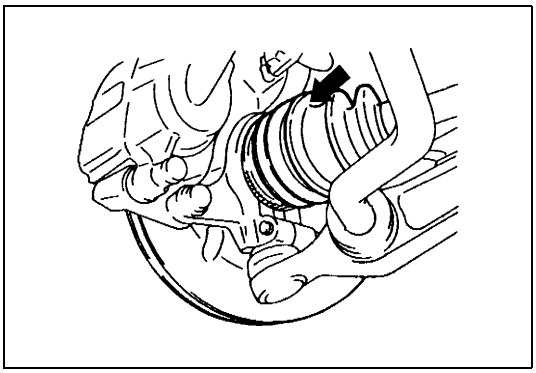

Inspect drive shaft boot for tear.
If even a small tear is noted, replace with new one.

ON-VEHICLE SERVICE

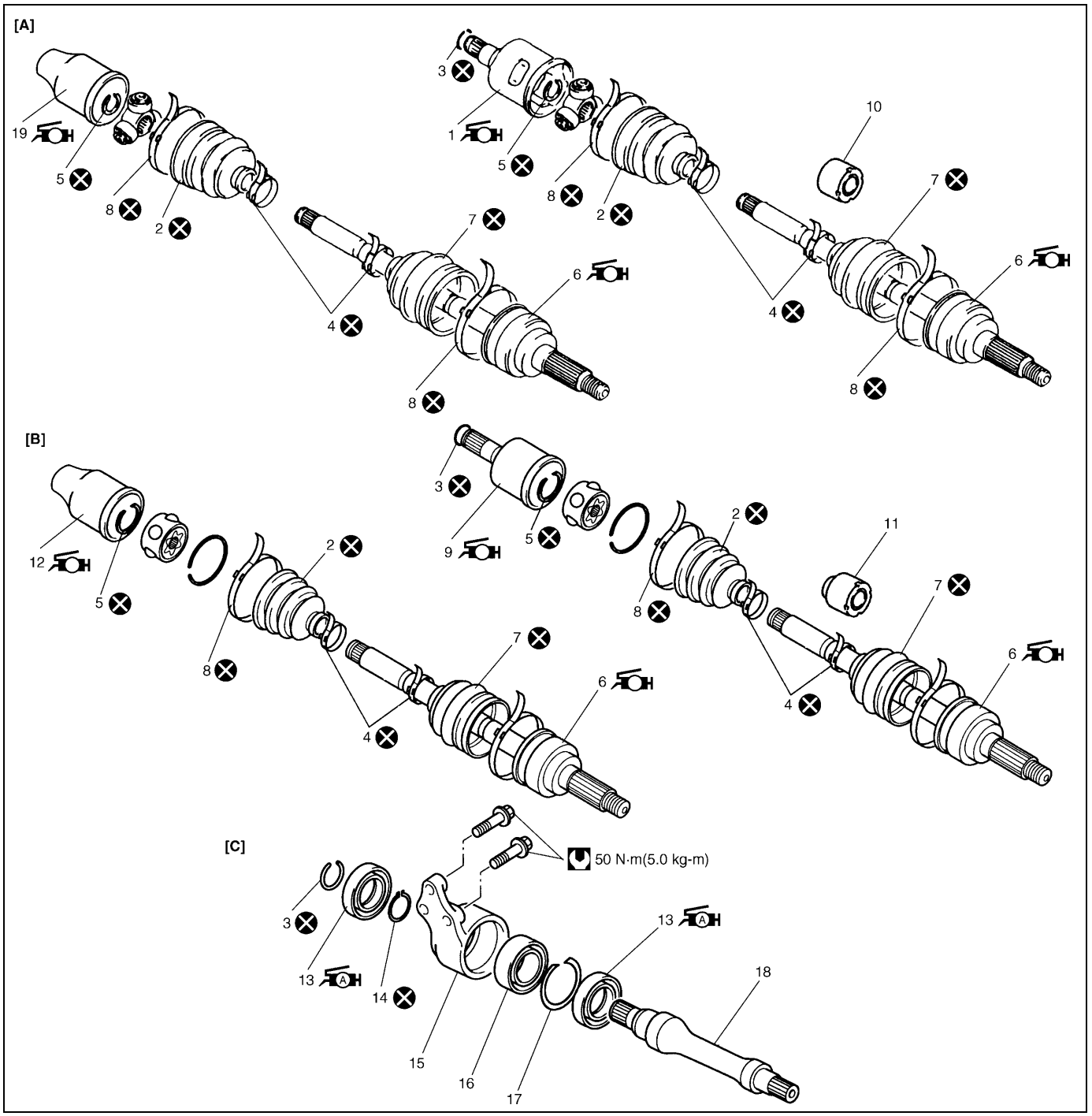

1. Differential side joint (RH of 2WD M/T vehicle) : Apply orange grease included in spare part to joint.	9. Differential (or transfer) side joint (LH of every type vehicles) : Apply black grease included in spare part to joint.	17. Circlip
2. Boot (Differential, transfer or center shaft side)	10. Dynamic damper (RH of 2WD M/T vehicle)	18. Center shaft
3. Circlip	11. Dynamic damper (LH of 2WD A/T vehicle)	19. Center shaft side joint (RH of 2WD A/T vehicle)
4. Boot band (Small)	12. Transfer side joint (RH of 4WD vehicle) : Apply black grease included in spare part to joint.	[A] : Constant velocity tripod joint type
5. Snap ring	13. Oil seal : Apply grease 99000-25010 to oil seal lip.	[B] : Constant velocity double offset joint type
6. Wheel side joint (Constant velocity joint) : Apply black grease included in spare part to joint.	14. Circlip	[C] : Center shaft for 2WD A/T vehicle
7. Boot (Wheel side)	15. Center bearing support	Tightening torque
8. Boot band (Large)	16. Center bearing	Do not reuse.

DRIVE SHAFT ASSEMBLY

REMOVAL

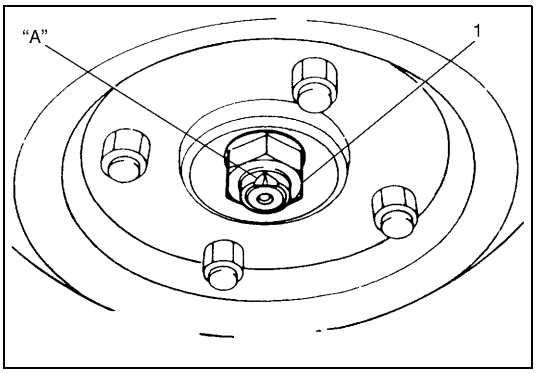

1) Undo caulking ("A") and remove drive shaft nut (1) and washer.

2) Hoist vehicle.
3) Remove wheel.
4) Drain transmission oil or transfer oil.

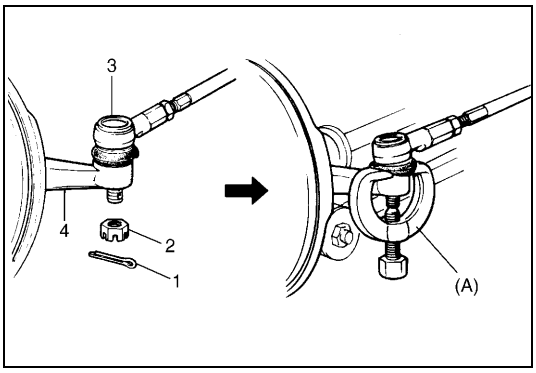

5) Remove tie rod end split pin (1) and castle nut (2).
6) Disconnect tie rod end (3) from steering knuckle (4) by using special tool.

Special tool
(A) : 09913-65210

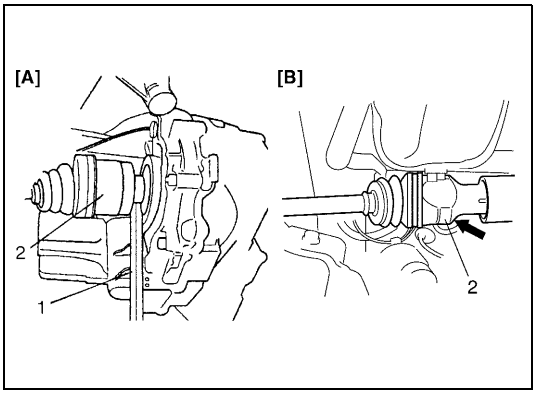

7) (For vehicle without center shaft or 4WD model)
Using tire lever (1), pull out drive shaft joint (2) so as to release snap ring fitting of joint spline at differential side.
(For vehicle with center shaft or 4WD model)
Using plastic hammer, drive out drive shaft joint (2) so as to release snap ring fitting of joint spline at center shaft or intermediate shaft of transfer.

[A] : Vehicle without center shaft or 4WD model
[B] : Vehicle with center shaft or 4WD model

8) Remove two stabilizer mount brackets from vehicle body.

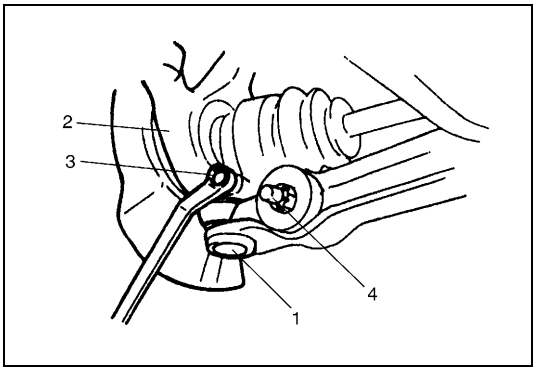

9) Disconnect front suspension control arm ball stud (1) from steering knuckle (2) by pushing down stabilizer bar (4) after removing ball stud bolt (3).

10) Remove drive shaft assembly.

CAUTION:
To prevent breakage of boots, be careful not to bring them into contact with other parts, when removing drive shaft assembly.

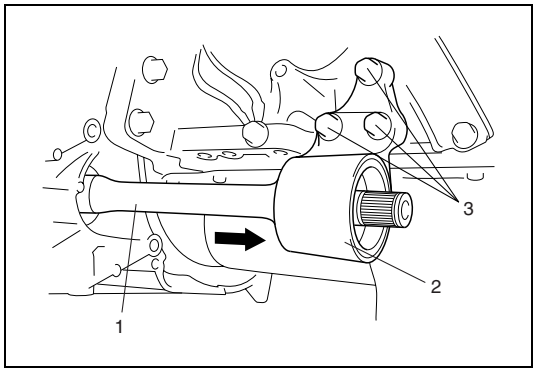

11) For vehicle with center shaft
Remove center bearing support bolts (3) and remove center bearing support (2) with center shaft (1) from differential side gear.

DISASSEMBLY

For Tripod Joint Type Drive Shaft

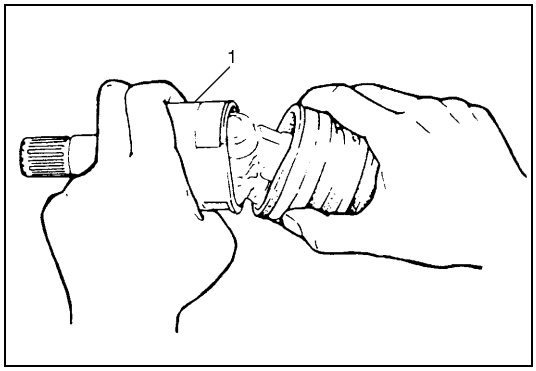

1) Remove differential side boot band, then take out tripod joint housing (1).

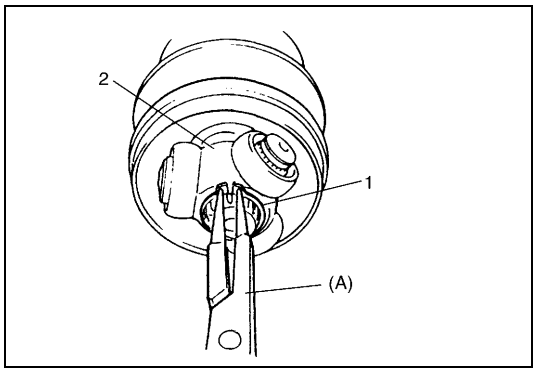

2) Remove grease from shaft and take off snap ring (1) by using special tool, then pull out spider (2) from shaft.

Special tool
(A) : 09900-06107

CAUTION:
To prevent needle bearing of joint from being degreased, do not wash it if it is to be reused.

3) Remove boot band, then pull out differential side boot from shaft.
4) Pull out damper through shaft. (if equipped)
5) Undo boot bands of wheel side joint boot, then pull out boot through shaft.

CAUTION:
- **Disassembly of wheel side joint is not allowed. If noise or damage exists in it, replace it as assembly.**
- **Do not disassemble tripod joint spider. If any malcondition is found in it, replace it as differential side joint assembly.**

For DOJ Type Drive Shaft

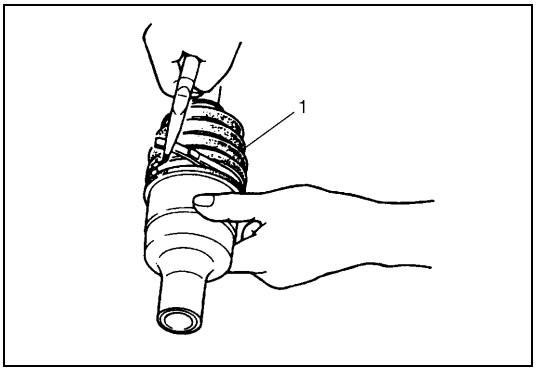

1) Remove boot band (1) of differential side joint.

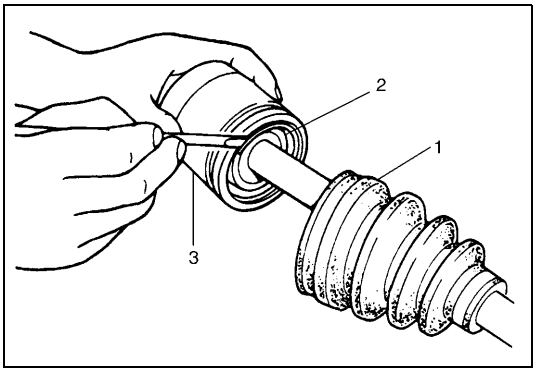

2) Slide boot (1) toward the center of shaft and remove snap ring (2) from outer race, then take shaft out of outer race (3).

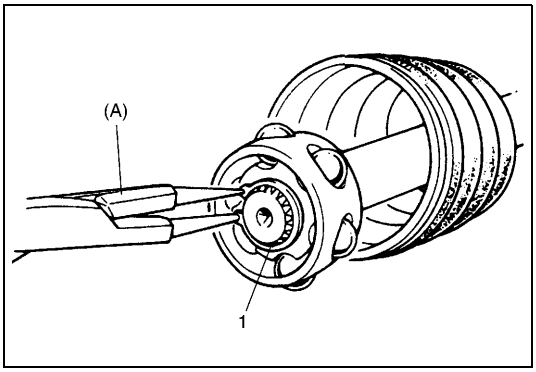

3) Wipe off grease and remove circlip (1) used to fix cage by using special tool (A).

Special tool
(A) : 09900-06107

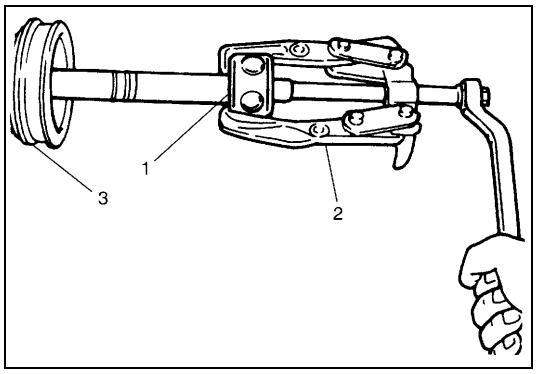

4) Draw away cage (1) by using bearing puller (2), and remove boot (3) from shaft.

5) Remove boot band, then pull out differential side boot from shaft.
6) Pull out damper through shaft. (if equipped)
7) Undo boot bands of wheel side joint boot, then pull out boot through shaft.

CAUTION:
Do not disassemble wheel side joint. If any malcondition is found in any joint, replace it as assembly.

For Center Shaft and Center Bearing Support

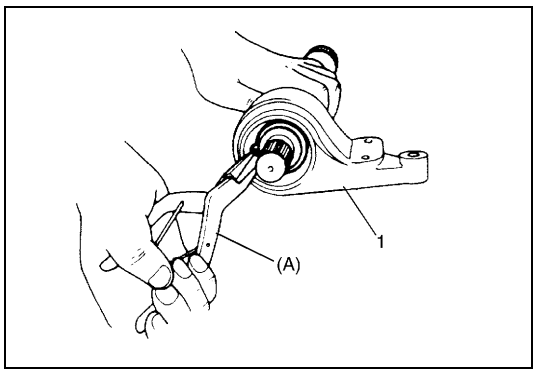

1) Remove right side oil seal from center bearing support (1).
2) Remove circlip by using special tool.

Special tool
(A) : 09900-06108

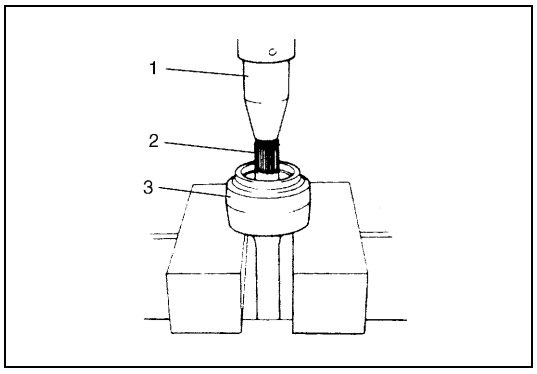

3) Using hydraulic press (1), draw out center shaft (2) from center bearing.
4) Remove left side oil seal from center bearing support (3).

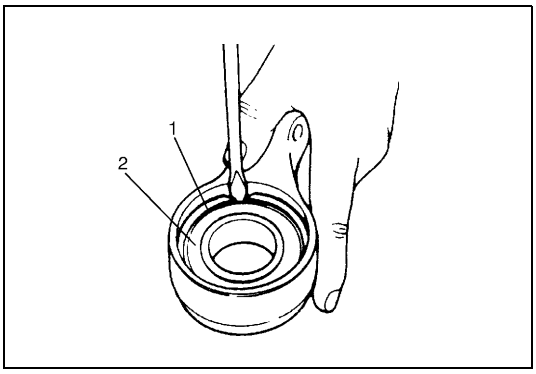

5) Remove circlip (1) by using flat end rod or the like.
6) Remove center bearing (2) from center bearing support.

ASSEMBLY

For Tripod Joint Type Drive Shaft

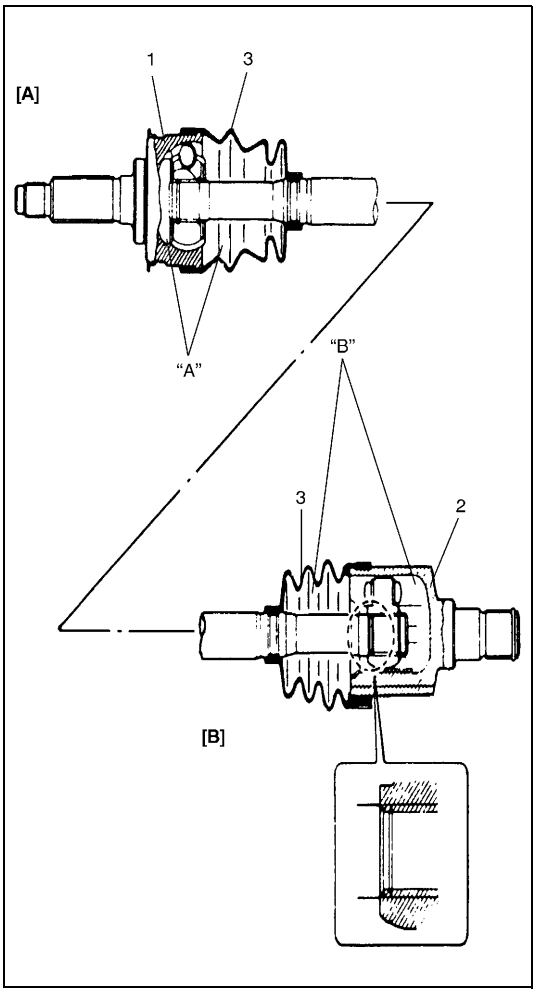

Judging from abnormality noted before disassembly and what is found through visual check of component parts after disassembly, prepare replacing parts and proceed to reassembly.
Make sure that wheel side joint assembly (1) and tripod joint housing (2) are washed thoroughly and air dried, and boots (3) are cleaned with cloth if they are to be reused.

CAUTION:
To ensure full performance of joint as designed, be sure to distinguish between two types of grease in repair set and apply specified volume to respective joint. Refer to the followings for identification of the grease.

"A" : Black grease (about 60 - 80 g/2.1 - 2.8 oz)
"B" : Orange grease (about 85 - 105 g/3.0 - 3.7 oz)

[A] :	Wheel side
[B] :	Differential side

1) Wash disassembled parts (except boots). After washing, dry parts completely by blowing air.
2) Clean boots with cloth. DO NOT wash boots in degreaser, such as gasoline or kerosene, etc. Washing in degreaser causes deterioration of boot.
3) Apply grease to wheel side joint. Use specified grease in tube in wheel side boot set.
4) Install wheel side boot on shaft.

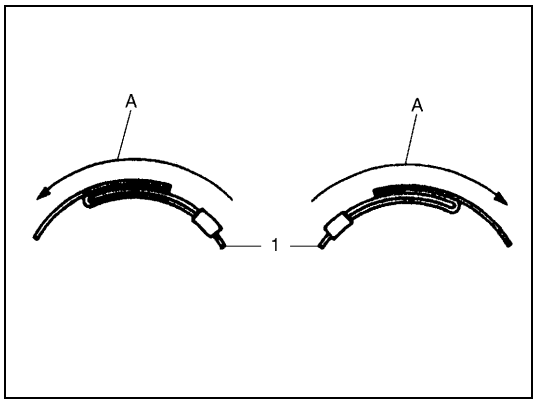

5) Fill up boot inside with specified grease and then fasten boot with bands (1).

CAUTION:
- **Bend each boot band against forward rotation (A).**
- **Do not squeeze or distort boot when fastening it with bands.**
  Distorted boot caused by squeezing air may reduce its durability.

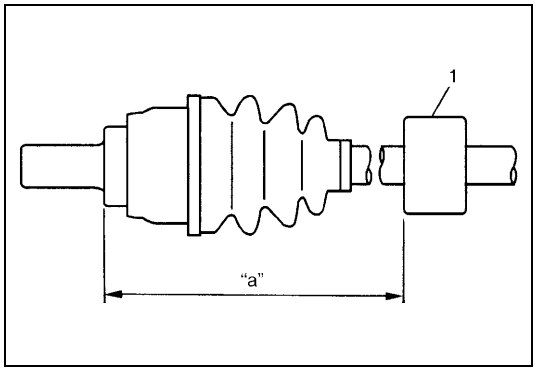

6) Install dynamic damper (1) on drive shaft according to dimension specified below.

Drive shaft dynamic damper installing position
"a" : 347 - 353 mm (13.7 - 13.9 in.)

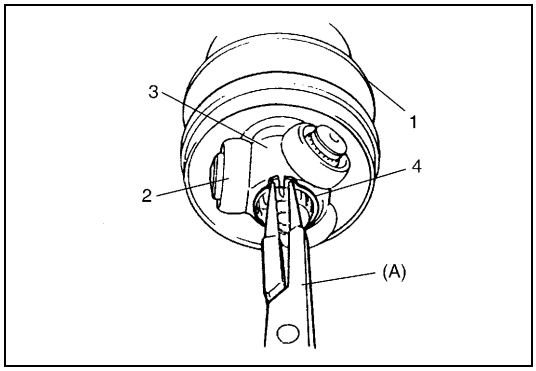

7) Set new differential side small band and differential side boot (1) on shaft temporarily.
   Apply grease to tripod joint (2). Use specified grease in tube included in spare parts.
8) Install tripod joint spider (3) on shaft, facing its chamfered spline inward (wheel side), then fasten it with snap ring (4).

Special tool
(A) : 09900-06107

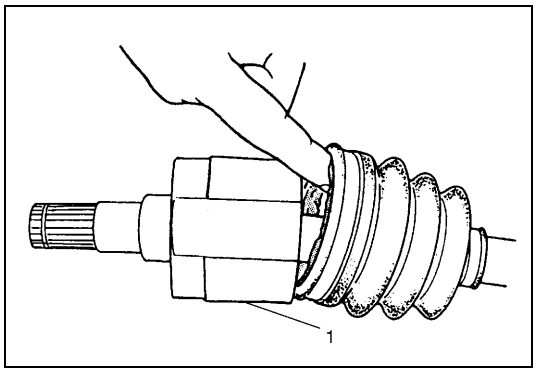

9) Apply grease to inside of outer race (1), then install housing, joint it with boot and fit boot to outer race.
   After fitting boot, insert screwdriver into boot on outer race side and allow air to enter boot so that air pressure in boot becomes the same as atmospheric pressure.

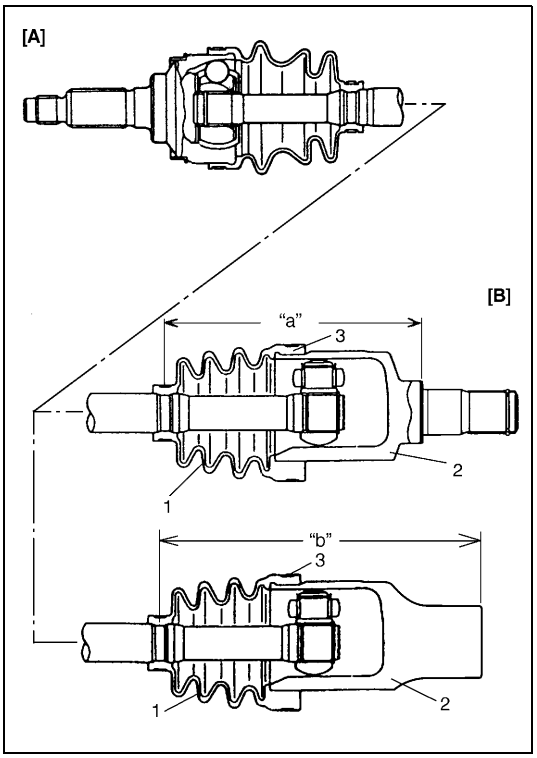

10) When fixing boot (1) to outer race (2) with differential side big band (3), adjust so that measured dimensions become as indicated below.

Drive shaft boot fixing position
"a" : 155.5 mm (6.12 in.) for M/T vehicle
"b" : 189.3 mm (7.45 in.) for A/T vehicle

CAUTION:
To prevent any problem caused by washing solution, do not wash joint boots and tripod joint except its housing. Degreasing of those parts with cloth is allowed.

[A] :	Wheel side
[B] :	Differential side

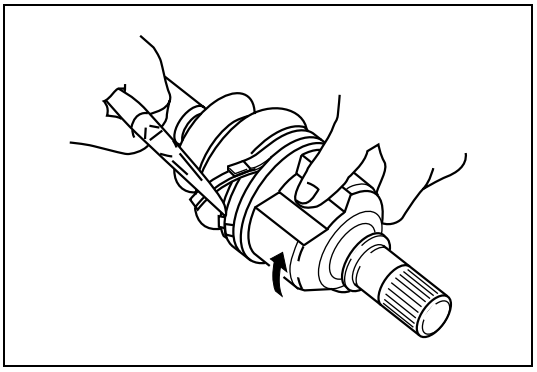

CAUTION:
- **Bend each boot band against forward rotation.**
- **Do not squeeze or distort boot when fastening it with bands.**
  Distorted boot caused by squeezing air may reduce its durability.

For DOJ Type Drive Shaft

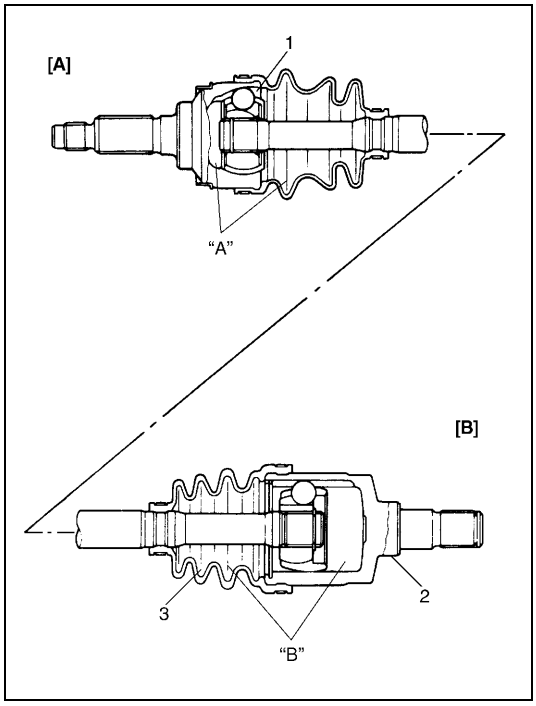

Judging from abnormality noted before disassembly and what is found though visual check of component parts after disassembly, prepare replacing parts and proceed to reassembly.
Make sure that wheel side joint assembly (1) and DOJ housing (2) are washed thoroughly and air dried, and boots (3) are cleaned with cloth if they are to be reused.

CAUTION:
To ensure full performance of joint as designed, be sure to distinguish between two types of grease in repair set and apply specified volume to respective joint.

"A" : Black grease (about 60 - 80 g/2.1 - 2.8 oz)
"B" : Black grease (rather light than "A")
(about 70 - 90 g/2.5 - 3.2 oz)

[A] :	Wheel side
[B] :	Differential side

1) Wash disassembled parts (except boots). After washing. dry parts completely by blowing air.
2) Clean boots with cloth. Do not wash boots in degreaser, such as gasoline or kerosene, etc.
   Washing in degreaser causes deterioration of boot.
3) Apply grease to wheel side joint. Use specified grease in tube included in wheel side boot set.

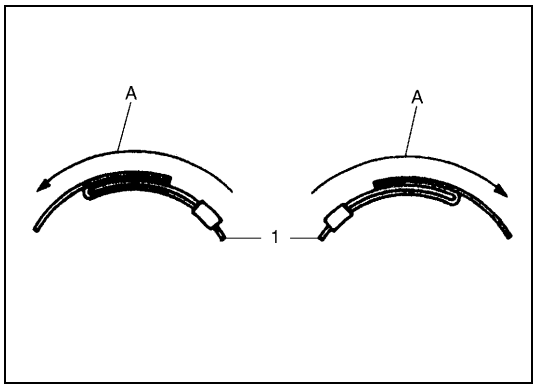

4) Install wheel side boot on shaft, fill up boot inside with grease and then fasten boot with bands (1).

CAUTION:
- **Bend each boot band against forward rotation (A).**
- **Do not squeeze or distort boot when fastening it with bands.**
  Distorted boot caused by squeezing air may reduce its durability.

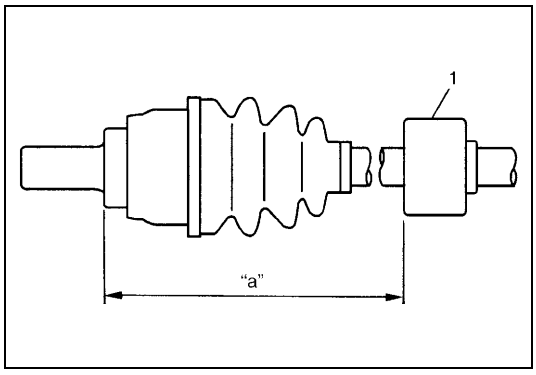

5) Install dynamic damper (1) on left side drive shaft according to dimension specified below. (For A/T model of 2WD vehicle)

Dynamic damper installing position
"a" : 151 - 157 mm (5.9 - 6.2 in.)

6) Set new differential side small bend and differential side boot on shaft temporarily.

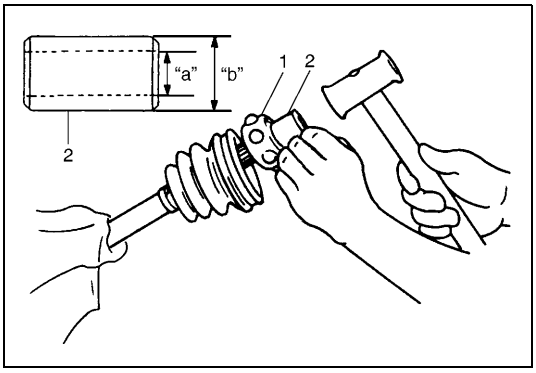

7) Driver in the cage (1) by using a pipe (2).

Drive shaft joint cage installing pipe diameter
"a" : 22.5 mm (0.886 in.) or more
"b" : 30.0 mm (1.181 in.) or less

CAUTION:
Install cage directing smaller outside diameter side to wheel side.

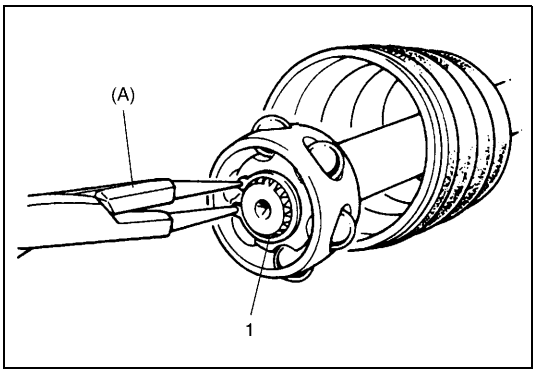

8) Install circlip (1) by using special tool (A).

Special tool
(A) : 09900-06107

9) Apply grease to entire surface of cage.
Use specified grease in tube included in spare parts.

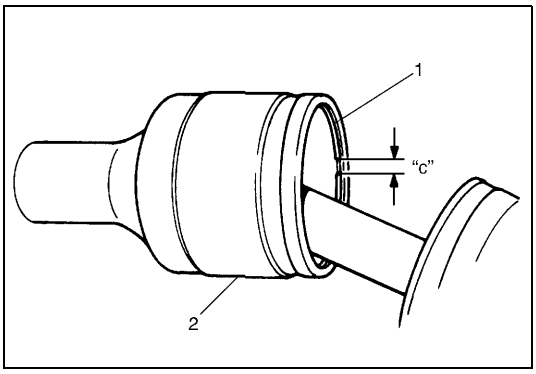

10) Insert cage into outer race and fit snap ring (1) into groove of outer race (2).

CAUTION:
Position opening of snap ring "c" so that it will not be lined up with a ball.

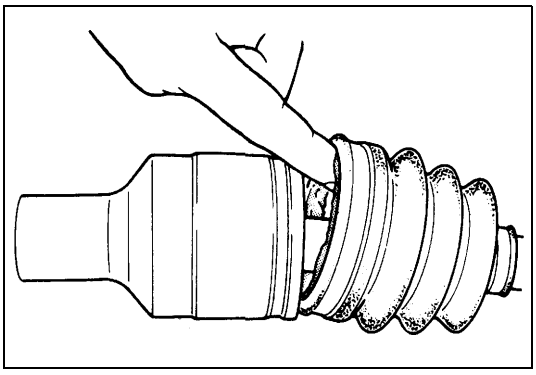

11) Apply grease to inside of outer race, and fit boot to outer race. After fitting boot, insert screwdriver into boot on outer race side and allow air to enter boot so that air pressure in boot becomes the same as atmospheric pressure.

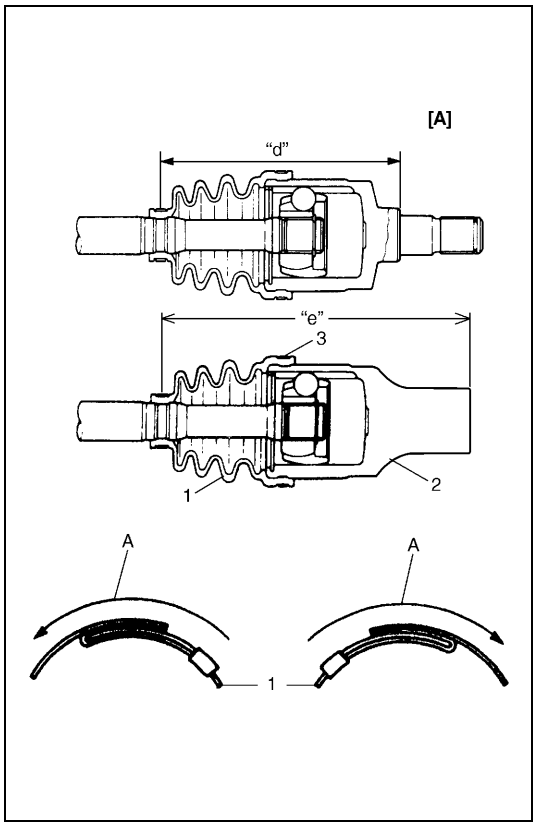

12) When fixing boot (1) to outer race (2) with differential side big band (3), adjust so that measurements become as indicated below.

Drive shaft boot fixing position
"d" : 157.8 mm (6.21 in.) for left side
"e" : 192.9 mm (7.59 in.) foe right side

CAUTION:
To prevent any problem caused by washing solution, do not wash joint boots. Degreasing of those parts with cloth is allowed.

CAUTION:
- **Bend each boot band against forward rotation (A).**
- **Do not squeeze or distort boot when fastening it with bands.**
  Distorted boot caused by squeezing air may reduce its durability.

[A] : Differential side

For Center Shaft and Center Bearing Support

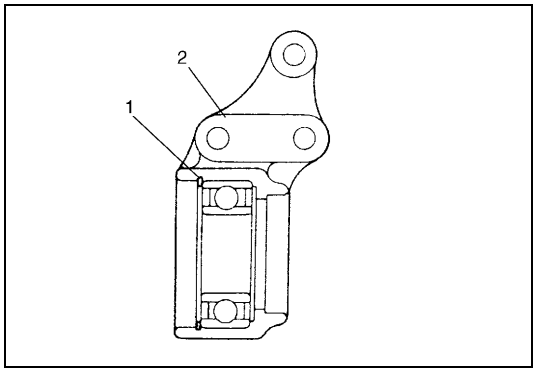

Install center shaft by reversing removal procedure and noting following points
- When installing bearing support circlip (1), make sure that if fits in circlip groove in center bearing support (2) securely as shown.

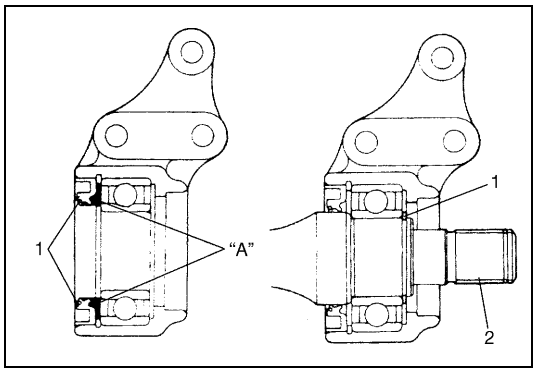

- When installing left oil seal (1), use care so that oil seal in proper direction as shown figure.
- Be sure to apply grease to oil seal lip and bearing side space indicated in figure.

"A" : Grease 99000-25010

- After press-fit center shaft (2) from left oil seal side, install circlip to groove of center shaft securely.

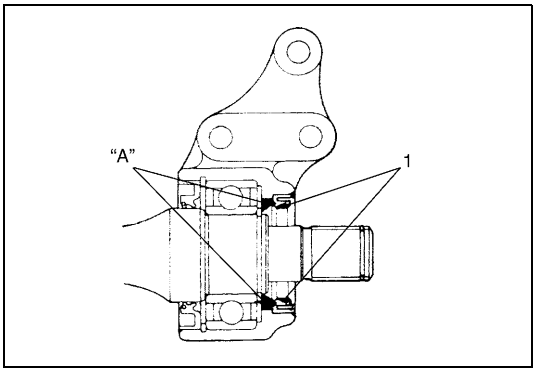

- When installing right oil seal (1), use care so that oil seal in proper direction as shown figure.
- Be sure apply grease to oil seal lip and bearing side space indicated in figure.

"A" : Grease 99000-25010

INSTALLATION

CAUTION:

- **To avoid excessive expansion of boot and consequential disconnection of joint in boot, do not pull differential side joint housing.**
- **Protect oil seals and boots from any damage, preventing them from unnecessary contact while installing drive shaft.**
- **Do not hit joint boot with hammer. Inserting joint only by hands is allowed.**
- **Make sure that differential side joint is inserted fully and its snap ring is seated as it was.**

Install drive shaft assembly by reversing removal procedure and noting following points.

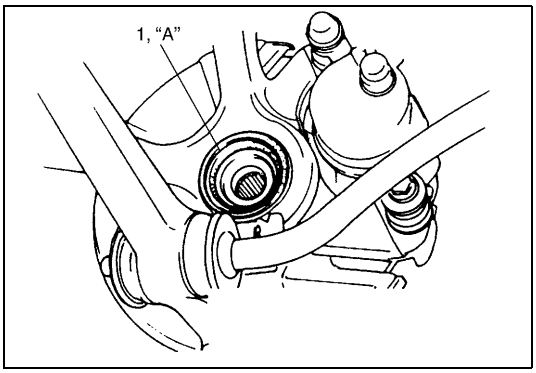

- Clean front wheel bearing oil seal (1) and then apply grease. Replace it if required.

"A" : Grease 99000-25010

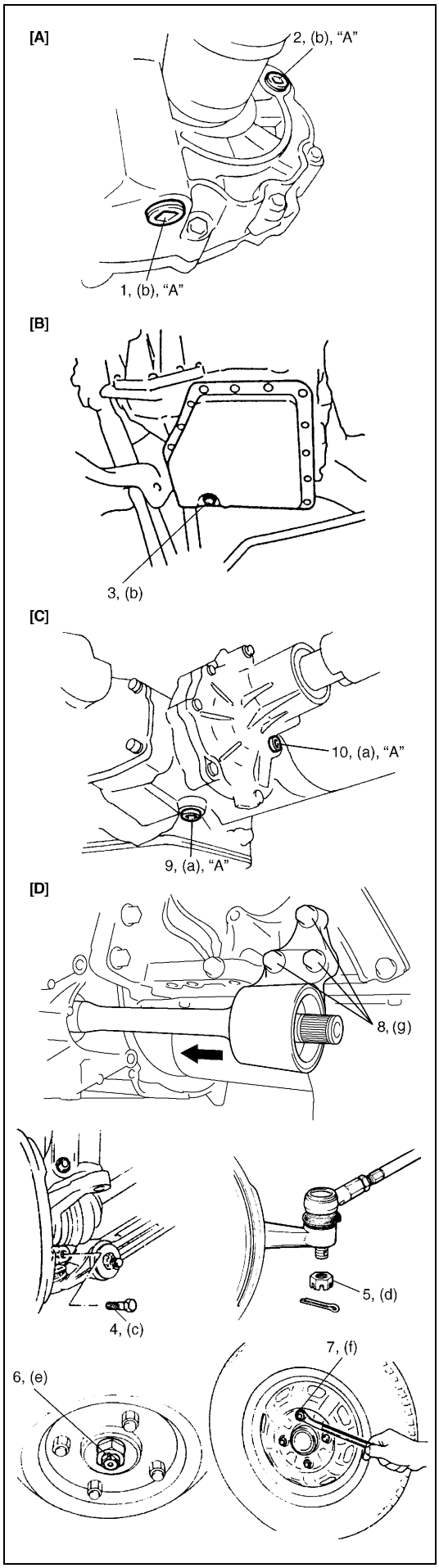

- Tighten each bolt and nut to the specified torque.

Tightening torque
Transfer oil filler/level and drain plugs (a) :
21 N·m (2.1 kg-m, 15.5 lb-ft)
Transmission oil filler/level and drain plugs (b) :
23 N·m (2.3 kg-m, 17.0 lb-ft)
Ball stud bolt (c) : 60 N·m (6.0 kg-m, 43.5 lb-ft)
Tie rod end castle nut (d) :
35 - 50 N·m (3.5 - 5.0 kg-m, 25.5 - 36.0 lb-ft)
Drive shaft nut (e) : 175 N·m (17.5 kg-m, 127.0 lb-ft)
Wheel nut (f) : 85 N·m (8.5 kg-m, 61.5 lb-ft)
Center bearing support bolts (g) :
50 N·m (5.0 kg-m, 36.0 lb-ft)

- Apply sealant to drain plug (1) and filler/level plug (2) for manual transmission.

"A" : Sealant 99000-31110

- Apply sealant to drain plug (9) and filler/level plug (10) for transfer. (For 4WD model)

"A" : Sealant 99000-31110

- Fill transmission or transfer with oil as specified. (Refer to Section 7A, 7B or 7D.)

[A] :	For M/T vehicle
[B] :	For A/T vehicle
[C] :	For 4WD model
[D] :	For vehicle equipped with center shaft
3.	Drain plug (for A/T vehicle)
4.	Ball stud bolt
5.	Castle nut
6.	Drive shaft nut
7.	Wheel nut
8.	Center bearing support bolt

TIGHTENING TORQUE SPECIFICATION

Fastening portion	Tightening torque		
	N•m	kg-m	lb-ft
Transfer oil filler/level and drain plugs	21	2.1	15.5
Transmission oil filler/level and drain plugs	23	2.3	17.0
Ball stud bolt	60	6.0	43.5
Tie rod end castle nut	35 - 50	3.5 - 5.0	25.5 - 36.0
Drive shaft nut	175	17.5	127.0
Wheel nut	85	8.5	61.5
Center bearing support bolts	50	5.0	36.0

REQUIRED SERVICE MATERIAL

Material	Recommended SUZUKI product (Part Number)	Use
Lithium grease	SUZUKI SUPER GREASE A (99000-25010)	• Oil seal lips
Sealant	SUZUKI BOND NO. 1215 (99000-31110)	• Oil drain and filler plug for manual transmission or transfer

SPECIAL TOOL

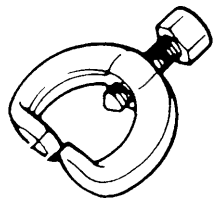	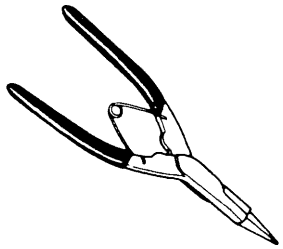	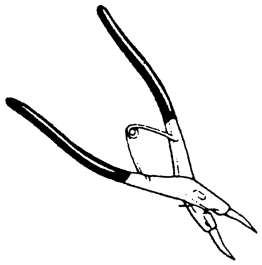
09913-65210 Tie-rod end remover	09900-06107 Snap ring pliers (Open type)	09900-06108 Snap ring pliers (Closing type)

SECTION 4B

PROPELLER SHAFTS

CONTENTS

GENERAL DESCRIPTION 4B-1
DIAGNOSIS 4B-1
DIAGNOSIS TABLE 4B-1
PROPELLER SHAFT JOINT CHECK..... 4B-2
ON-VEHICLE SERVICE 4B-2
TIGHTENING TORQUE SPECIFICATION..... 4B-4

GENERAL DESCRIPTION

Most universal and constant velocity joints require no maintenance. They are lubricated for life and can not be lubricated on the vehicle. If universal and constant velocity joints becomes noisy or worn, it must be replace. The propeller shaft is a balanced unit. Handle it carefully so that balance can be maintained.

DIAGNOSIS

DIAGNOSIS TABLE

Condition	Possible Cause	Correction
Abnormal noise	• Loose universal joint bolt	Tighten universal joint bolt.
	• Spider bearing worn out or stuck	Replace.
	• Wear spider	Replace propeller shaft.
Vibration	• Performed propeller shaft	Replace.

PROPELLER SHAFT JOINT CHECK

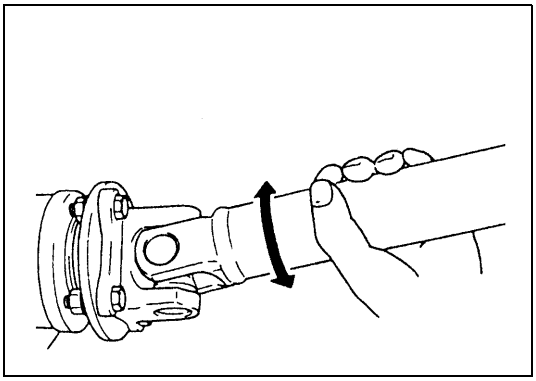

If universal joints are suspected of producing chattering or rattling noise, inspect them for wear. Check to see if cross spider rattles in yokes or if splines are worn down and replace defective propeller shaft with new one.

Noise coming from universal joint can be easily distinguished from other noises because rhythm of chattering or rattling is in step with cruising speed. Noise is pronounced particularly on standing start or in coasting condition (when braking effect of engine is showing in the drive line).

ON-VEHICLE SERVICE

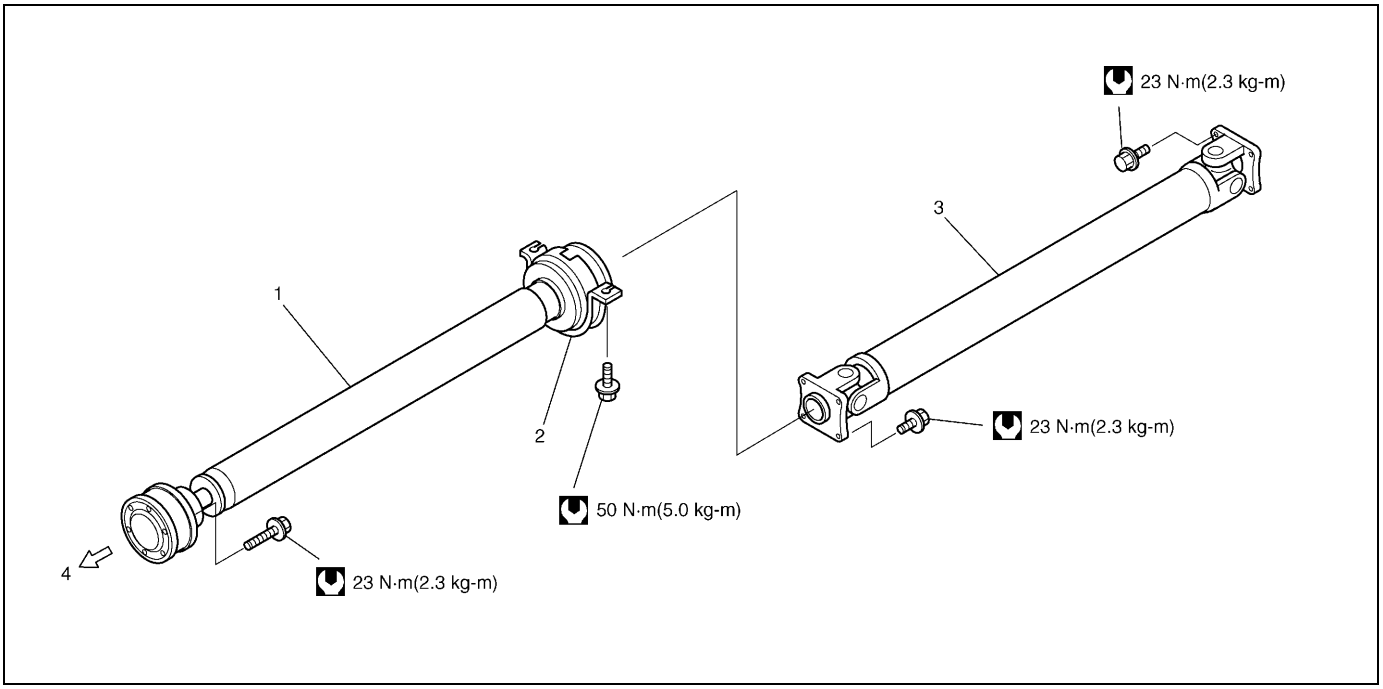

1.	Propeller shaft No.1
2.	Center support
3.	Propeller shaft No.2
4.	Forward
	Tightening torque

REMOVAL

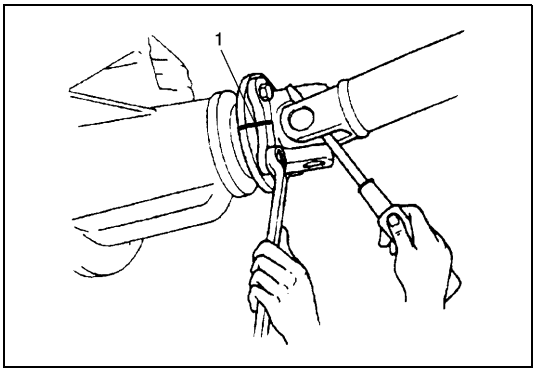

1) Hoist vehicle.
2) Before removing propeller shaft, give match mark (1) on propeller shaft and companion flange as shown. Also give match mark (1) on propeller shaft No.2 and center support flange of propeller shaft No.1.
3) Loosen propeller shaft bolt at front and rear end, and separate propeller shaft from transfer and rear differential.

4) Loosen propeller shaft bolt connecting propeller shaft No.1 with propeller shaft No.2, but keeping their connection provisionally.

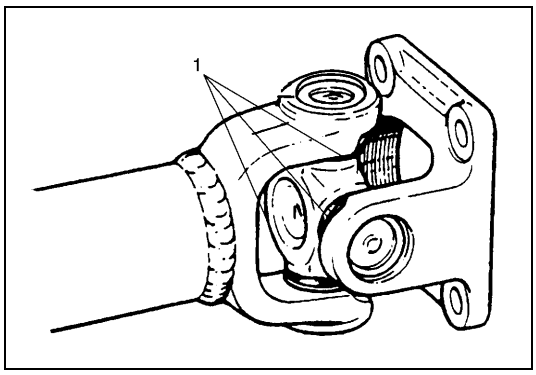

CAUTION:
Don't damage joint seal (1) to prevent lubrication defect of joint.

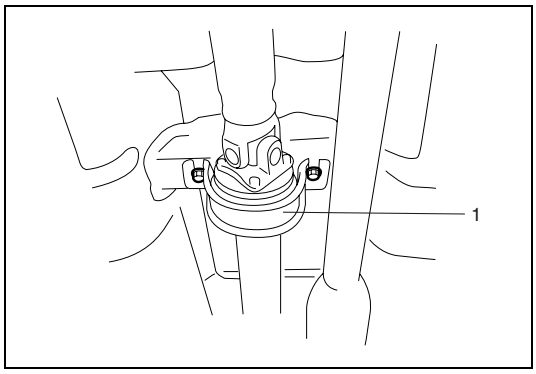

5) Loosen center support bolt, then remove propeller shaft No.1 with No.2.

1. Center support

6) Disconnect propeller shaft No.1 from propeller shaft No.2.

INSPECTION

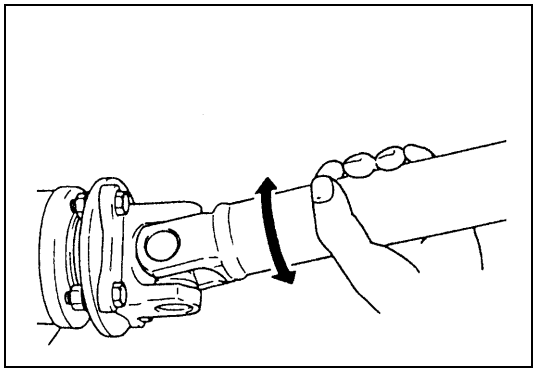

- Check propeller shaft connecting bolts for looseness. If looseness is found, tighten to specified torque.
- Check propeller shaft joints for wear, rattle and damage. If any defect is found, replace.
- Check propeller shaft center support for biting of foreign matter, crack, abnormal noise and damage. If any defect is found, replace.

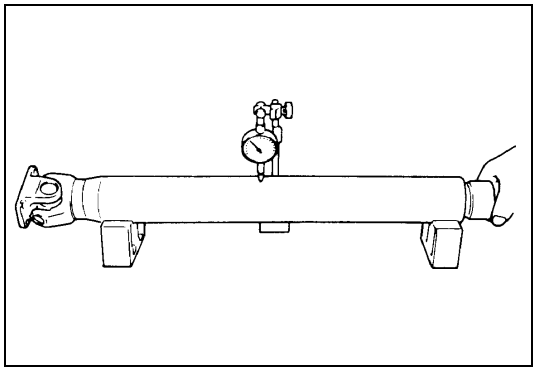

- Inspect propeller shaft and flange yoke for damage, and propeller shaft for runout.
  If damage is found or shaft runout exceeds its limit, replace.

Propeller shaft runout
Limit : 0.7 mm (0.028 in.)

INSTALLATION

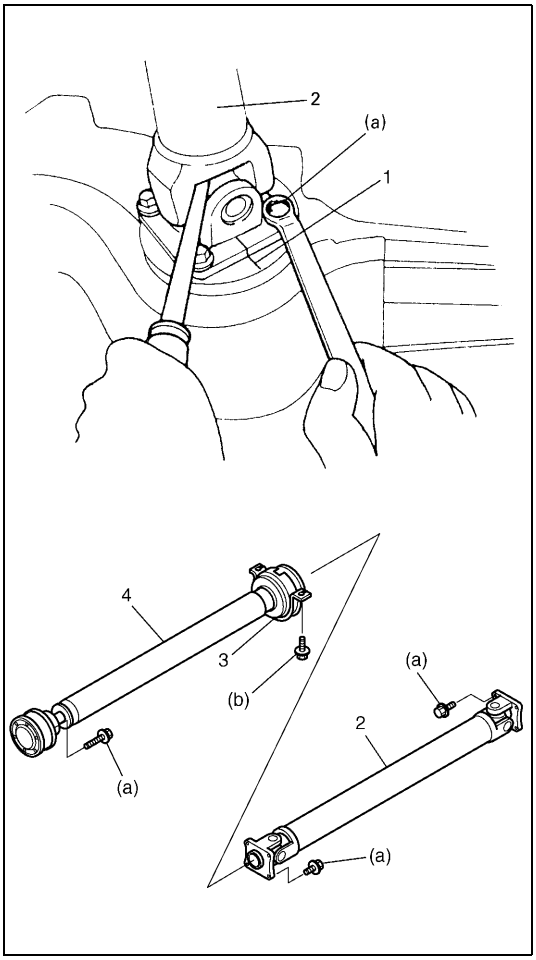

1) Reverse removal procedure to install propeller shaft noting following point.
   - When installing propeller shaft, align the match marks (1). Otherwise, vibration may occur during driving.
   - Use following specification to torque bolts.

Tightening torque
Propeller shaft bolt (a) : 23 N·m (2.3 kg-m, 17.0 lb-ft)
Center support bolt (b) : 50 N·m (5.0 kg-m, 36.5 lb-ft)

2.	Propeller shaft No.2
3.	Propeller shaft center support
4.	Propeller shaft No.1

TIGHTENING TORQUE SPECIFICATION

Fastening portion	Tightening torque		
	N•m	kg-m	lb-ft
Propeller shaft bolt	23	2.3	17.0
Center support bolt	50	5.0	36.5

SECTION 5

BRAKES

NOTE:

All front fasteners are important attaching parts in that they could affect the performance of vital parts and systems, and/or could result in major repair expense. They must be replaced with one of same part number or with an equivalent part if replacement becomes necessary. Do not use a replacement part of lesser quality or substitute design. Torque values must be used as specified during reassembly to assure proper retention of all parts. There is to be no welding as it may result in extensive damage and weakening of the metal.

CONTENTS

GENERAL DESCRIPTION 5-2
DIAGNOSIS 5-4
ROAD TESTING BRAKES 5-4
BRAKE FLUID LEAKS 5-4
SUBSTANDARD OR CONTAMINATED BRAKE FLUID 5-4
DIAGNOSIS TABLE 5-5
BRAKE PEDAL FREE HEIGHT ADJUSTMENT 5-8
BRAKE PEDAL PLAY INSPECTION 5-8
STOP LIGHT SWITCH ADJUSTMENT 5-8
EXCESSIVE PEDAL TRAVEL INSPECTION 5-9
FRONT BRAKE PAD INSPECTION 5-9
BRAKE DISC INSPECTION 5-9
PARKING BRAKE INSPECTION AND ADJUSTMENT 5-10
BOOSTER OPERATION INSPECTION 5-11
FLUID PRESSURE TEST (IF EQUIPPED WITH LSPV) 5-12
MASTER CYLINDER AND BRAKE FLUID LEVEL INSPECTION 5-14
BRAKE HOSE AND PIPE INSPECTION 5-15
HOSE 5-15
PIPE 5-15
ON-VEHICLE SERVICE 5-15
AIR BLEEDING OF BRAKE SYSTEM 5-15
FRONT BRAKE 5-17
BRAKE PAD 5-17
CALIPER ASSEMBLY 5-19
BRAKE DISC 5-23
REAR BRAKE 5-25
BRAKE DRUM 5-26
BRAKE SHOE 5-29
WHEEL CYLINDER 5-30
BRAKE BACK PLATE (FOR 2WD VEHICLE) 5-31
BRAKE BACK PLATE (FOR 4WD VEHICLE) 5-33
MASTER CYLINDER 5-33
MASTER CYLINDER RESERVOIR 5-33
MASTER CYLINDER ASSEMBLY 5-34
BRAKE BOOSTER 5-38
BRAKE HOSE/PIPE 5-41
FRONT BRAKE HOSE/PIPE 5-41
REAR BRAKE HOSE/PIPE 5-44
PARKING BRAKE CABLE 5-46
LSPV (LOAD SENSING PROPORTIONING VALVE) ASSEMBLY (IF EQUIPPED) 5-48
REQUIRED SERVICE MATERIAL 5-50
SPECIAL TOOL 5-50

GENERAL DESCRIPTION

When the foot brake pedal is depressed, hydraulic pressure is developed in the master cylinder to actuate pistons (two in front and four in rear).

The master cylinder is a tandem master cylinder. Brake pipes are connected to the master cylinder and they make two independent circuits. One connects front right & rear left brakes and the other connects front left & rear right brakes.

The load sensing proportioning valve (LSPV) or the proportioning valve (P valve) is included in these circuits between the master cylinder and the rear brake for the vehicle without ABS.

In this brake system, the disc brake type is used for the front wheel brake and a drum brake type (leading/trailing shoes) for the rear brake.

The parking brake system is mechanical. It applies brake force to only rear wheels by means of the cable and mechanical linkage system. The same brake shoes are used for both parking and foot brakes.

NOTE:

The figures shows left-hand steering vehicle.

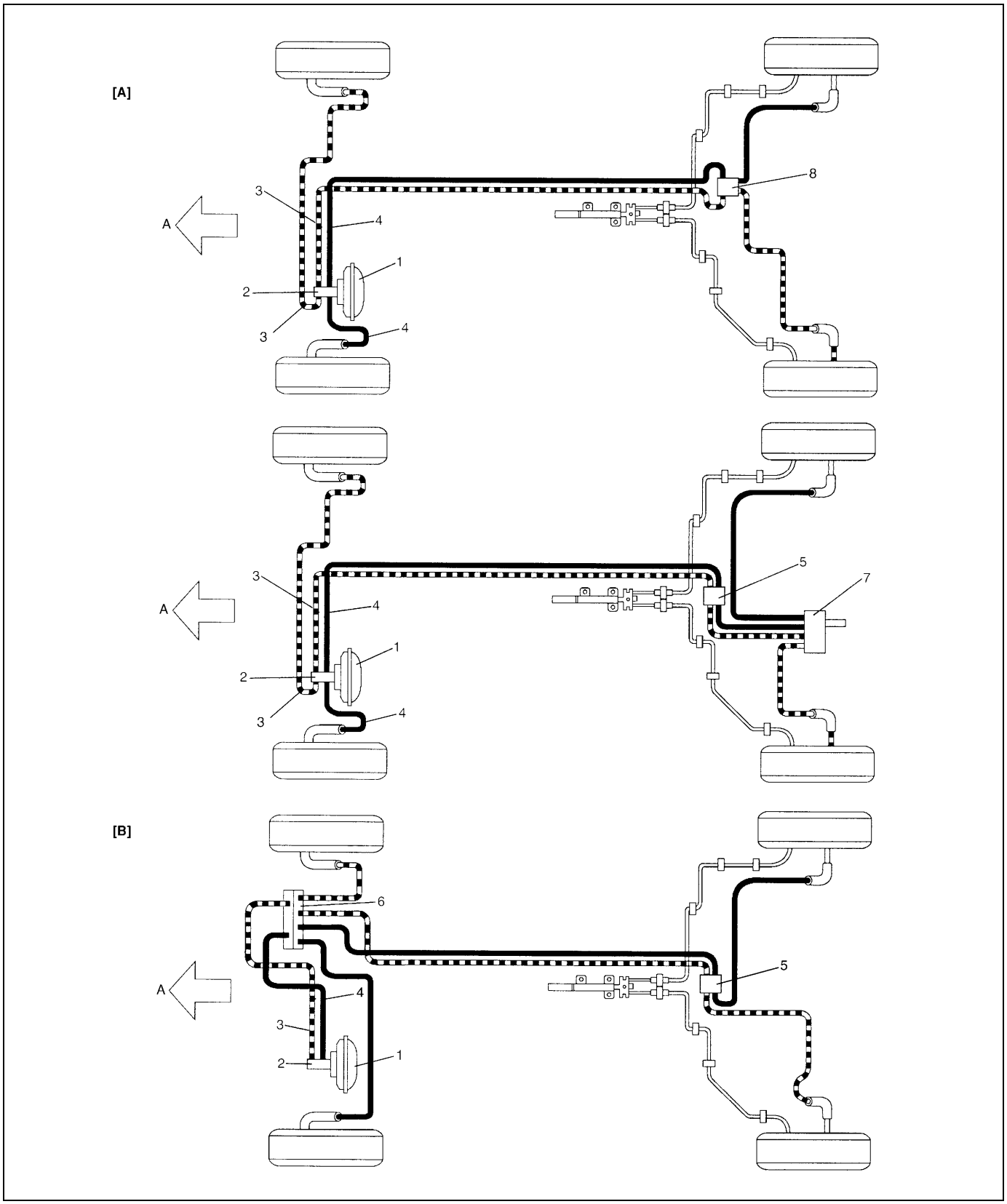

[A] : For vehicle without ABS	3. Secondary side	7. LSPV (Load Sensing Proportioning valve)
[B] : For vehicle with ABS	4. Primary side	8. P (Proportioning) valve
1. Brake booster	5. 4-way joint	A: Forward
2. Master cylinder	6. ABS hydraulic unit/control module assembly	

DIAGNOSIS

ROAD TESTING BRAKES

Brakes should be tested on dry, clean, smooth and reasonably level roadway which is not crowned. Road test brakes by making brake applications with both light and heavy pedal forces at various speeds to determine if the vehicle stops evenly and effectively. Also drive vehicle to see if it leads to one side or the other without brake application. If it does, check the tire pressure, front end alignment and front suspension attachments for looseness. See diagnosis table for other causes.

BRAKE FLUID LEAKS

Check the master cylinder fluid levels. While a slight drop in reservoir level does result from normal lining wear, an abnormally low level indicates a leak in the system. In such a case, check the entire brake system for leakage. If even a slight evidence of leakage is noted, the cause should be corrected or defective parts should be replaced.

SUBSTANDARD OR CONTAMINATED BRAKE FLUID

Improper brake fluid, mineral oil or water in the fluid may cause the brake fluid to boil or the rubber components in the hydraulic system to deteriorate.

If primary piston cups are swollen, then rubber parts have deteriorated. This deterioration may also be evidenced by swollen wheel cylinder piston cups on the drum brake wheels.

If deterioration of rubber is evident, disassemble all hydraulic parts and wash with alcohol. Dry these parts with compressed air before assembly to keep alcohol out of the system. Replace all rubber parts in the system, including hoses. Also, when working on the brake mechanisms, check for fluid on the linings.
If excessive fluid is found, replace the pads.

If master cylinder piston seals are satisfactory, check for leakage or excessive heat conditions. If leakage is not found, drain fluid, flush with brake fluid, refill and bleed system.

The system must be flushed if there is any doubt as to the grade of fluid in the system or if fluid has been used which contained parts that have been subjected to contaminated fluid.

DIAGNOSIS TABLE

Condition	Possible Cause	Correction
Not enough braking force	Brake oil leakage from brake lines	Locate leaking point and repair.
	Brake disc or pads stained with oil	Clean or replace.
	Overheated brakes	Determine cause and repair.
	Poor contact of shoes on brake drum	Repair for proper contact.
	Brake shoes linings stained with oil or wet with water	Replace.
	Badly worn brake pad linings	Replace.
	Defective wheel cylinders	Repair or replace.
	Malfunctioning caliper assembly	Repair or replace.
	Air in system	Bleed system.
	Maladjusted sensor spring length of LSPV, if equipped	Check or adjust.
	Broken sensor spring of LSPV, if equipped	Replace.
	Defective LSPV, if equipped	Replace.
	Malfunctioning ABS (Antilock brake system), if equipped	Check system and replace as necessary.
Brake pull (Brakes not working in unison)	Pad linings and/or shoe linings are wet with water or stained with oil in some brakes	Replace.
	Drum-to-shoe clearance out of adjustment in some brakes (Malfunctioning auto adjusting mechanism)	Check for inoperative auto adjusting mechanism.
	Disc and/or drum is out of round in some brakes	Replace.
	Wheel tires are inflated unequally	Inflate equally.
	Malfunction in wheel cylinders	Repair or replace.
	Disturbed front end alignment	Adjust as prescribed.
	Unmatched tires on same axle	Tires with approximately the same amount of tread should be used on the same axle.
	Restricted brake pipes or hoses	Check for soft hoses and damaged lines. Replace with new hoses and new double-walled steel brake tubing.
	Malfunctioning caliper assembly	Check for stuck or sluggish pistons and proper lubrication of caliper slide bush. Caliper should slide.
	Loose suspension parts	Check all suspension mountings.
	Loose calipers	Check and torque bolts to specifications.
Noise (high pitched squeak without brake applied)	Front lining worn out	Replace linings.
	Contact wear indicator to brake disc	Replace pads.
Rear brake locked prematurely	Maladjusted sensor spring length of LSPV, if equipped	Check or adjust.
	Malfunction LSPV assembly, if equipped	Replace assembly.

Condition	Possible Cause	Correction
Excessive pedal travel (Pedal stroke too large)	Partial brake system failure	Check brake systems and repair as necessary.
	Insufficient fluid in master cylinder reservoirs	Fill reservoirs with approved brake fluid. Check for leaks and air in brake system. Check warning light. Bleed system if required.
	Air in system (soft/spongy pedal)	Bleed system.
	Rear brake system not adjusted (malfunctioning auto adjusting mechanism)	Repair auto adjusting mechanism. Adjust rear brakes.
	Bent brake shoes	Replace brake shoes.
	Worn rear brake shoes	Replace brake shoes.
Brake locked (For vehicle equipped with ABS)	Malfunctioning ABS	Check system referring to Section 5E1.
Dragging brakes (A very light drag is present in all brakes immediately after pedal is released)	Master cylinder pistons not returning correctly	Replace master cylinder.
	Restricted brake pipes or hoses	Check for soft hoses or damaged pipes and replace with new hoses and/or new double-walled steel brake piping.
	Incorrect parking brake adjustment on rear brakes	Check and adjust to correct specifications.
	Weakened or broken return springs in the brake	Replace.
	Sluggish parking brake cables or linkage	Repair or replace.
	Wheel cylinder or caliper piston sticking	Repair as necessary.
	Badly worn piston seal in caliper	Replace piston seal.
Pedal pulsation (Pedal pulsates when depressed for braking)	Damaged or loose wheel bearings	Replace wheel bearings.
	Distorted steering knuckle or rear wheel spindle	Replace knuckle or rear wheel spindle.
	Excessive disc lateral runout	Check per instructions. If not within specifications, replace or machine disc.
	Parallelism between pad and disc not within specifications	Check per instructions. If not within specifications, replace or machine disc.
	Rear drums out of round	Check runout. Repair or replace drum as necessary.
Braking noise	Glazed shoe linings, or foreign matters stuck to linings	Repair or replace shoe linings.
	Worn or distorted shoe linings	Replace shoe lining (or pad).
	Loose front wheel bearings	Replace wheel bearing.
	Distorted backing plates or loose mounting bolts	Replace or retighten securing bolts.
	Contact wear indicator to brake disc	Replace pads.

Condition	Possible Cause	Correction
Brake warning lamp lights after engine start	Parking brake applied	Release parking brake and check that brake warning lamp turns off.
	Insufficient amount of brake fluid	Add brake fluid.
	Brake fluid leaking from brake line	Investigate leaky point, correct it and add brake fluid.
	Brake warning lamp circuit faulty	Repair circuit.
	Malfunctioning EBD system, if equipped with ABS.	Check system referring to Table-E of Section 5E1.
Brake warning lamp turns on when brake is applied	Brake fluid leaking from brake line	Investigate leaky point, correct it and add brake fluid.
	Insufficient amount of brake fluid	Add brake fluid.
Brake warning lamp fails to turn on even when parking brake is applied	Brake warning lamp circuit faulty	Replace bulb or repair circuit.
ABS warning lamp turns on after engine start (If equipped)	Malfunctioning ABS	Check system referring to DIAGNOSIS of Section 5E1.
ABS warning lamp turns on when brake is applied (If equipped)	Malfunctioning ABS	Check system referring to DIAGNOSIS of Section 5E1.
ABS warning lamp does not turn on for 2 sec. after ignition switch has turned ON	Bulb burnt out	Replace bulb.
	Malfunctioning ABS	Check system referring to DIAGNOSIS of Section 5E1.
ABS warning lamp flashes	New ABS hydraulic unit/control module assembly installed.	Perform “ABS Hydraulic Unit Operation Check”.

BRAKE PEDAL FREE HEIGHT ADJUSTMENT

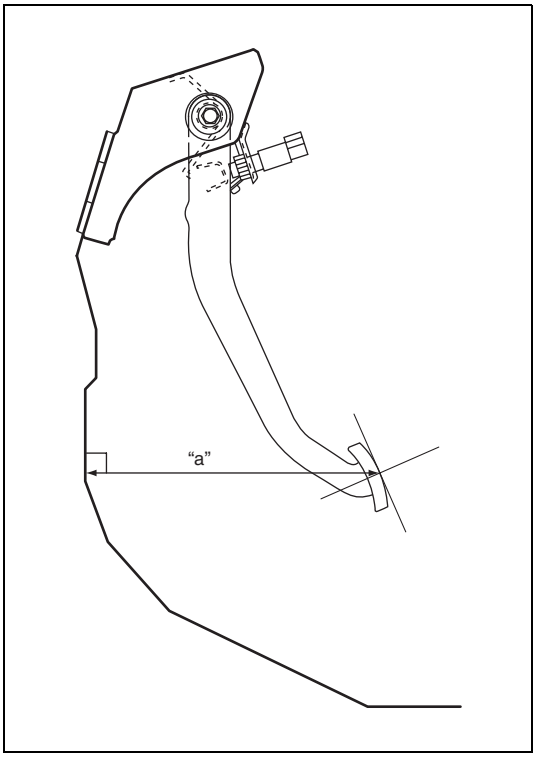

1) Check brake pedal free height.
   If it is not within specification, check and adjust following item 1) and 2).

   Brake pedal free height "a" from dash silencer
   LH steering vehicle : 205 – 225 mm (8.08 – 8.85 in.)
   RH steering vehicle : 217 – 237 mm (8.55 – 9.33 in.)

2) Check measurement between booster mounting surface and center of clevis pin hole. When booster push rod clevis has been reinstalled, it is important that the measurement is adjusted (refer to BRAKE BOOSTER INSPECTION AND ADJUSTMENT).
3) Check stop light switch position. Adjust it if it is out of specification.

BRAKE PEDAL PLAY INSPECTION

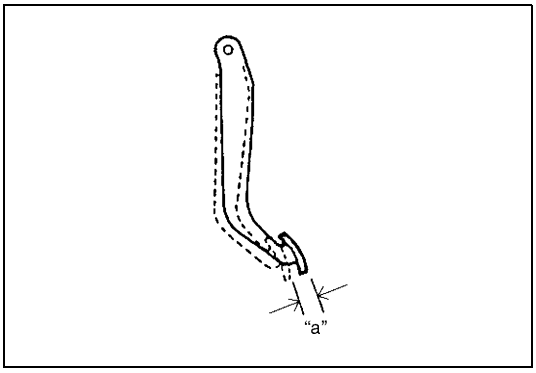

Pedal play should be within specification below. If out of specification, check stop light switch for proper installation position and adjust if necessary.
Also check pedal shaft bolt and master cylinder pin installation for looseness and replace if defective.

Brake pedal play
"a" : 1 - 8 mm (0.04 - 0.31 in.)

STOP LIGHT SWITCH ADJUSTMENT

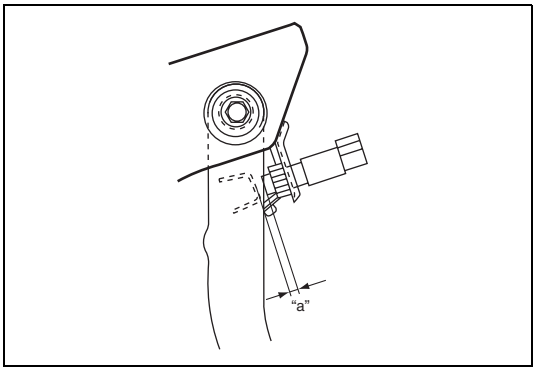

Adjustment should be made as follows when installing switch. Pull up brake pedal toward you and while holding it there, adjust switch position so that clearance between end of thread and brake pedal is as specified. Then adjust stop light switch assembly position and lock it by turning clockwise.

Clearance between brake pedal and stop light switch
"a" : 0.5 - 1.5 mm (0.02 -0.06 in.)

EXCESSIVE PEDAL TRAVEL INSPECTION

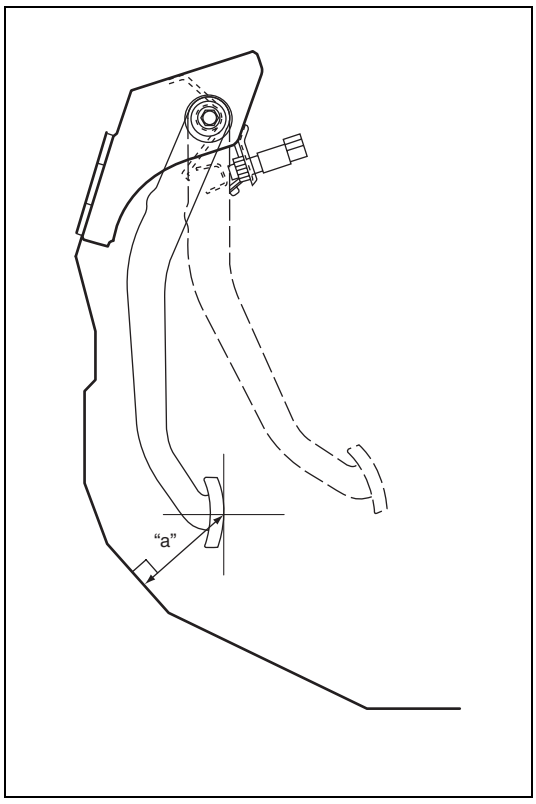

1) Start engine.
2) Depress brake pedal a few times.
3) With brake pedal depressed with approximately 30 kg (66 lbs) load, measure brake pedal to wall (dash panel silencer) clearance "a".
   If clearance "a" is less than specification, the most possible cause is either rear brake shoes are worn out beyond limit or air is in lines.
   Should clearance "a" remain less than specification even after replacement of brake shoes and bleeding of system, other possible but infrequent cause is malfunction of rear brake shoe adjusters or booster push rod length out of adjustment.
   – Bleed brake system. Refer to "AIR BLEEDING OF BRAKE SYSTEM".
   – Remove brake drums for adjuster inspection. (Refer to "REAR BRAKE".) If defective, correct or replace.

Clearance "a" between brake pedal and dash panel silencer
LH steering vehicle : over 135 mm (5.32 in.)
RH steering vehicle : over 140 mm (5.52 in.)

FRONT BRAKE PAD INSPECTION

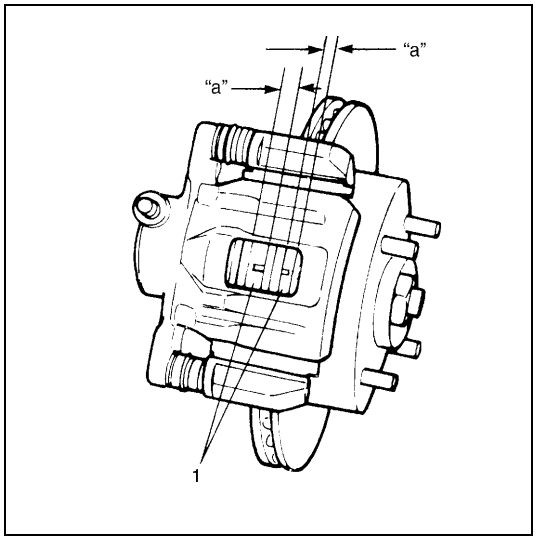

Inspect pad linings (1) periodically according to maintenance schedule whenever wheels are removed (for tire rotation or other reason). Take a look through each end (or hole) of caliper and check lining thickness of outside and inside pads.
If lining is worn and its thickness ("a" in figure) is less than limit, all pads must be replaced at the same time.

Front brake pad thickness "a" (lining thickness)
Standard : 10 mm (0.40 in.)
Limit : 2 mm (0.08 in.)

BRAKE DISC INSPECTION

Refer to "BRAKE DISC" for inspection point and procedure.

PARKING BRAKE INSPECTION AND ADJUSTMENT

INSPECTION

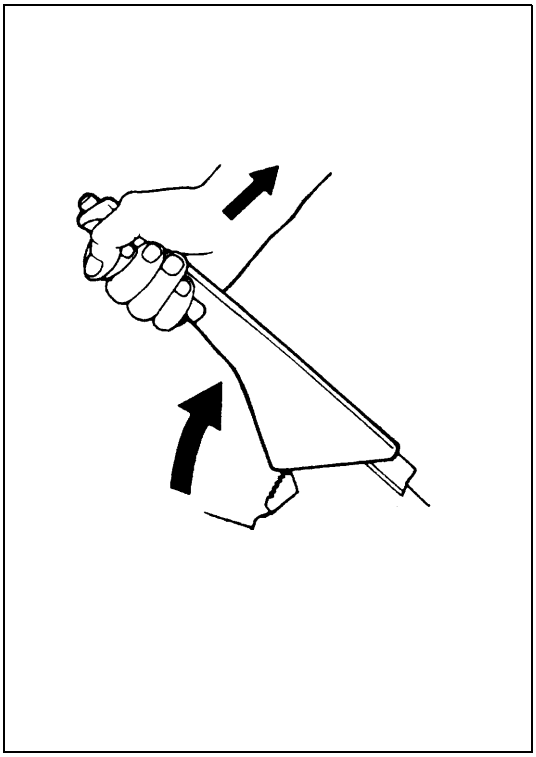

Hold center of parking brake lever grip and pull it up with 200 N (20 kg, 44 lbs) force.
With parking brake lever pulled up as shown, count ratchet notches. There should be 4 to 9 notches.
Also, check if both right and left rear wheels are locked firmly.
To count number of notches easily, listen to click sounds that ratchet makes while pulling parking brake lever without pressing its button.
One click sound corresponds to one notch.
If number of notches is out of specification, adjust cable referring to adjustment procedure so as to obtain specified parking brake store.

NOTE:

Check tooth tip of each notch for damage or wear.
If any damage or wear is found, replace parking brake lever.

ADJUSTMENT

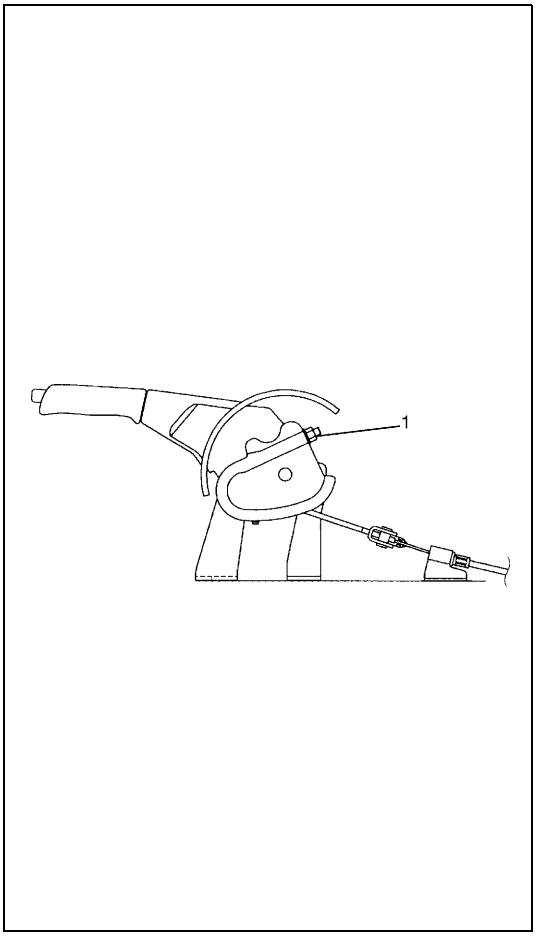

NOTE:

Make sure for the following conditions before cable adjustment.

- **No air is trapped in brake system.**
- **Brake pedal travel is proper.**
- **Brake pedal has been depressed a few times with about 100 N (10 kg, 22 lbs) load.**
- **Parking brake lever is pulled up a few times with about 500 N (50 kg, 110 lbs) load.**
- **Rear brake shoes are not worn beyond limit, and self adjusting mechanism operates properly.**
- **If parking brake lever stroke is less than specification, loosen adjusting nut (1) as far as end of bolt. Then depress brake pedal repeatedly with about 300 N (30 kg, 66 lbs) load until adjuster actuator clicking sound can not be heard from drum brake.**

After confirming that above conditions are all satisfied, adjust parking brake lever stoke by loosening or tightening adjust nut (1).

NOTE:

Check brake drum for dragging after adjustment.

Parking brake stroke (When lever is pulled up at 200 N (20 kg, 44 lbs)
: 4 to 9 notches

BOOSTER OPERATION INSPECTION

There are two ways to perform this inspection, with and without a tester. Ordinarily, it is possible to roughly determine its condition without using a tester.

NOTE:
For this check, make sure that no air is in hydraulic line.

CHECK AIR TIGHTNESS

1) Start engine.
2) Stop engine after running for 1 to 2 minutes.

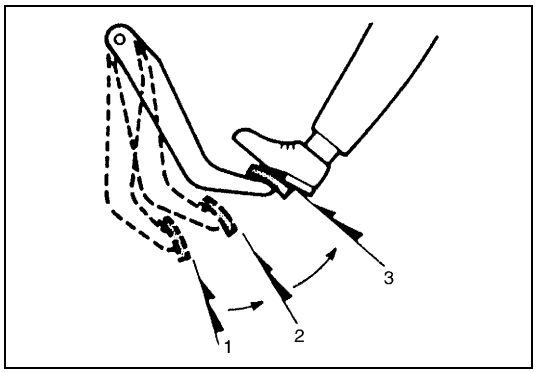

3) Depress brake pedal several times with the same load as in ordinary braking and observe pedal travel. If pedal goes down deep the first time but its travel decreases as it is depressed the second and more times, air tightness is obtained.

1. 1st
2. 2nd
3. 3rd

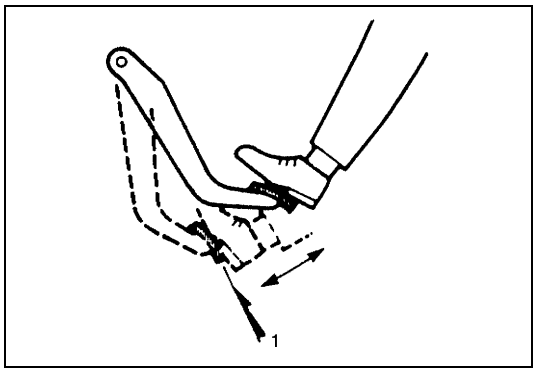

4) If pedal travel doesn't change, air tightness isn't obtained.

NOTE:
If defective, inspect vacuum lines and sealing parts, and replace any faulty part.When this has been done, repeat the entire test.

1. 1st, 2nd, 3rd

CHECK OPERATION

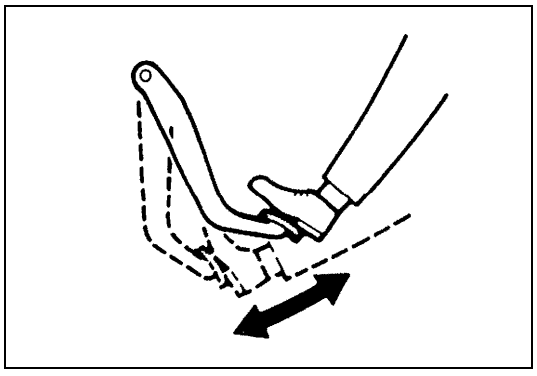

1) With engine stopped, depress brake pedal several times with the same load and make sure that pedal travel doesn't change.

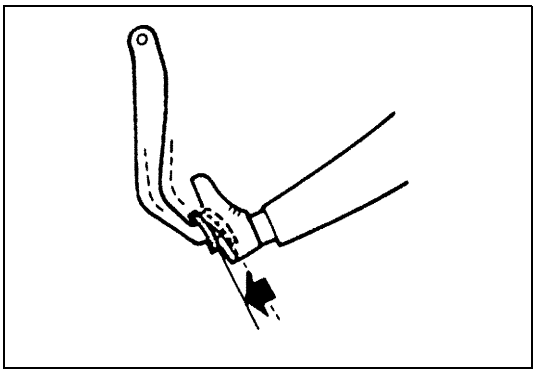

2) Start engine while depressing brake pedal. If pedal travel increases a little, operation is satisfactory. But no change in pedal travel indicates malfunction.

CHECK AIR TIGHTNESS UNDER LOAD

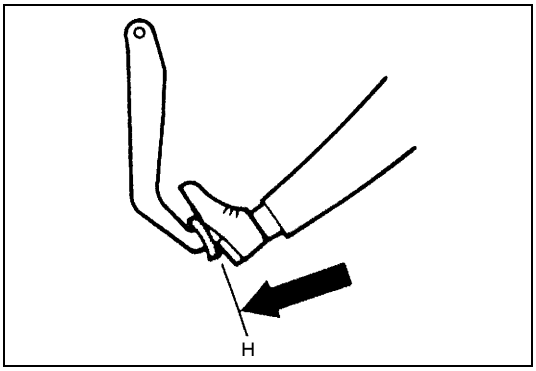

1) With engine running, depress brake pedal. Then stop engine while holding brake pedal depressed.

H: Hold

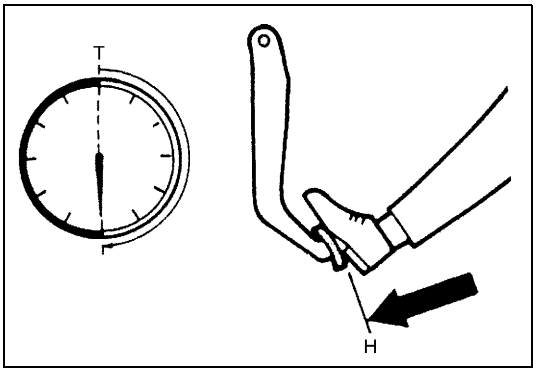

2) Hold brake pedal depressed for 30 seconds. If pedal height does not change, condition is good. But it isn't if pedal rises.

H: Hold
T: 30 seconds

FLUID PRESSURE TEST (IF EQUIPPED WITH LSPV)

Test procedure for LSPV assembly is as follows.

Before testing, confirm the following.

- Fuel tank is filled with fuel fully.
- Vehicle is equipped with spare tire, tools, jack and jack handle.

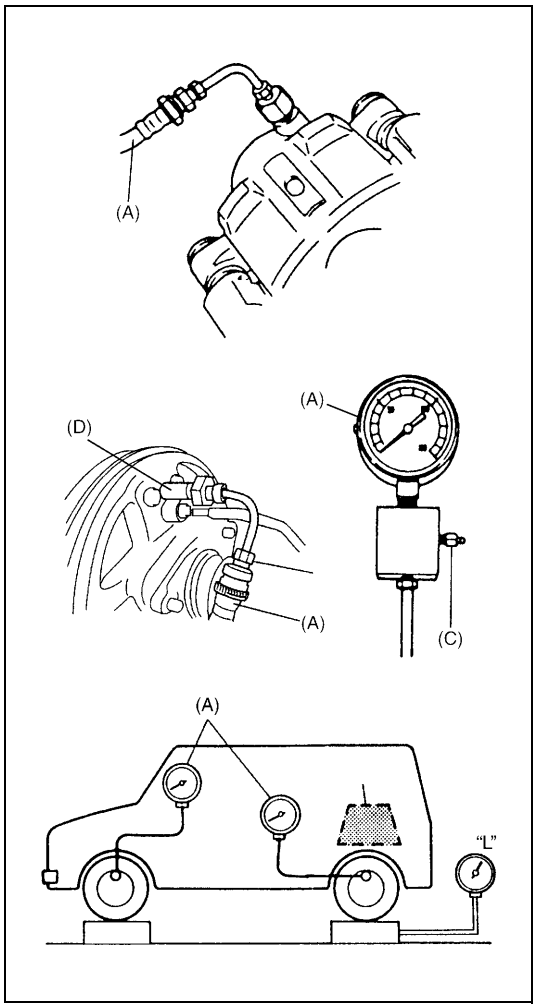

1) Stop vehicle on level floor and place approximately about 1,000 N (100 kg, 220 lbs) weight (1) on rear housing so that rear axle weighs 4,500 N (450 kg, 992 lbs).

Rear axle weight
"L" : 4,500 N (450 kg, 992 lbs)

2) Install special tool to front and rear brake.

NOTE:

Pressure gauge should be connected to bleeder plug hole of front (left side brake) and rear (right side brake). After testing front left side and rear right side, test front right side and rear left side in the same way.

For front wheel
Special tool
(A) : 09956-02310
(C) : 55473-82030 (Air bleeder plug as a spare part)
For rear wheel
Special tool
(A) : 09956-02310
(C) : 55473-82030 (Air bleeder plug as a spare part)
(D) : 09952-48320

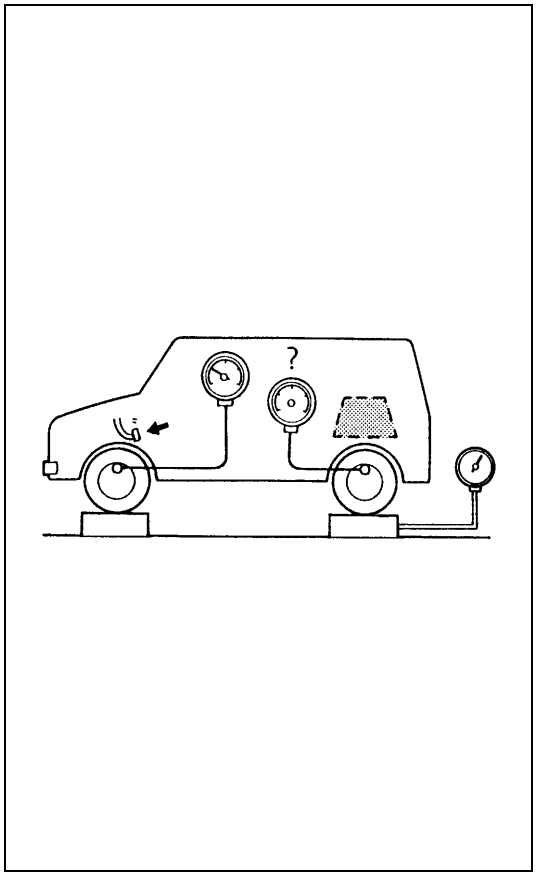

3) Depress brake pedal gradually till fluid pressure of front brake becomes as specified below and check corresponding pressure of rear brake then. It should be within specification given below.

LSPV specification

Front brake	Rear brake
7,500 kPa	4,700 – 6,900 kPa
75 kg/cm^2	47 – 69 kg/cm^2
1,067 psi	669 – 981 psi

4) As done above, apply 100 kg/cm^2 pressure to front brake and check that rear brake pressure then is within specification as given below.

LSPV specification (apply 100 kg/cm^2 pressure to front brake)

Front brake	Rear brake
10,000 kPa	5,400 – 7,700 kPa
100 kg/cm^2	54 – 77 kg/cm^2
1,422 psi	768 – 1,094 psi

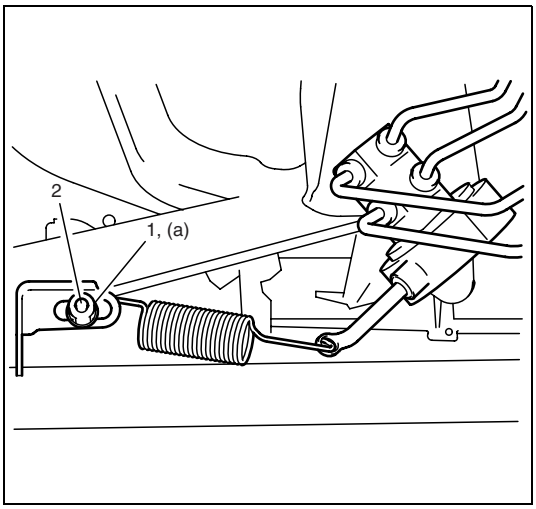

5) If rear brake pressure is not within specification, adjust it by changing bolt (2) position as follows.
   - If rear brake pressure is higher than specification, move bolt (2) center side and if it is lower, out side.
   - Repeat steps 3) and 4) until rear brake pressure is within specification.
   - After adjustment, be sure to torque nut (1) to specification.

   Tightening torque
   LSPV nut (a) : 25 N·m (2.5 kg-m, 18.0 lb-ft)

6) Upon completion of fluid pressure test, bleed brake system and perform brake test.

MASTER CYLINDER AND BRAKE FLUID LEVEL INSPECTION

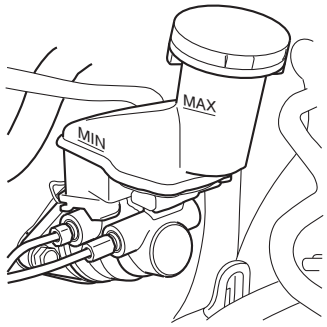

1) Check master cylinder and reservoir tank for crack, damage and brake fluid leakage. If any faulty condition exists, correct or replace.
2) Check that brake fluid level is between MAX and MIN marks on reservoir tank.

NOTE:

Be sure to use particular brake fluid either as indicated on reservoir cap of that vehicle or recommended in owner's manual which comes along with that vehicle. Use of any other fluid is strictly prohibited.
Fluid level should be between MIN and MAX lines marked on reservoir.
When brake warning lamp lights sometimes during driving, replenish fluid to MAX level.
When fluid decreases quickly, inspect brake system for leakage. Correct leaky points and then refill to specified level.

CAUTION:

Do not use shock absorber fluid or any other fluid which contains mineral oil. Do not use a container which has been used for mineral oil or a container which is wet from water. Mineral oil will cause swelling and distortion of rubber parts in hydraulic brake system and water mixed into brake fluid will lower fluid boiling point. Keep all fluid containers capped to prevent contamination.

BRAKE HOSE AND PIPE INSPECTION

HOSE

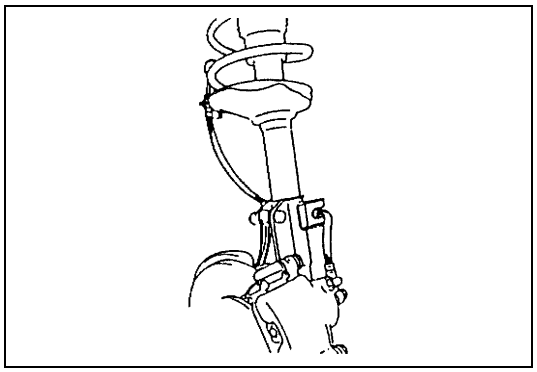

The brake hose assembly should be checked for road hazard damage, for cracks and chafing of outer cover, for leaks and blisters. A light and mirror may be needed for an adequate inspection. If any of above conditions are observed on brake hose, it is necessary to replace it.

PIPE

Inspect the pipe for damage, cracks, dents and corrosion. If any defect is found, replace it.

ON-VEHICLE SERVICE

AIR BLEEDING OF BRAKE SYSTEM

CAUTION:

Brake fluid is extremely damaging to paint. If fluid should accidentally touch painted surface, immediately wipe fluid from paint and clean painted surface.

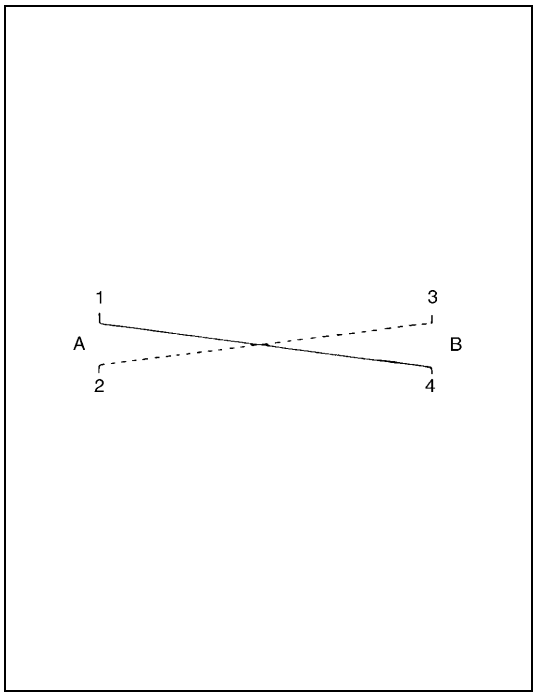

Bleeding operation is necessary to remove air whenever it entered hydraulic brake system.

Hydraulic lines of brake system are based on the diagonal split system. When a brake pipe or hose was disconnected at the wheel, bleeding operation must be performed at both ends of the line of the removed pipe or hose. When any joint part of the master cylinder of other joint part between the master cylinder and each brake (wheel) was removed, the hydraulic brake system must be bled at all 4 wheel brakes.

NOTE:

Perform bleeding operation starting with wheel cylinder farthest from master cylinder and then at front caliper of the same brake line. Do the same on the other brake line.

1. Right brake caliper	4. Left wheel cylinder
2. Left brake caliper	A : FRONT
3. Right wheel cylinder	B : REAR

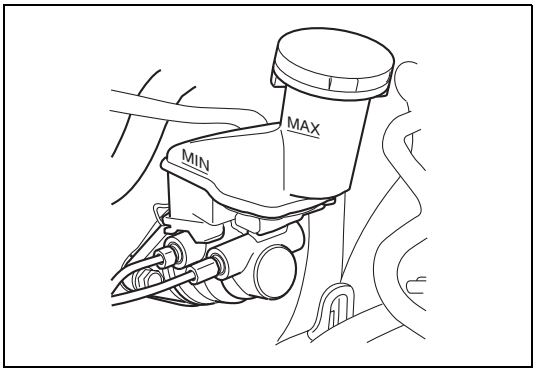

1) Fill master cylinder reservoir with brake fluid and keep at least one-half full of fluid during bleeding operation.

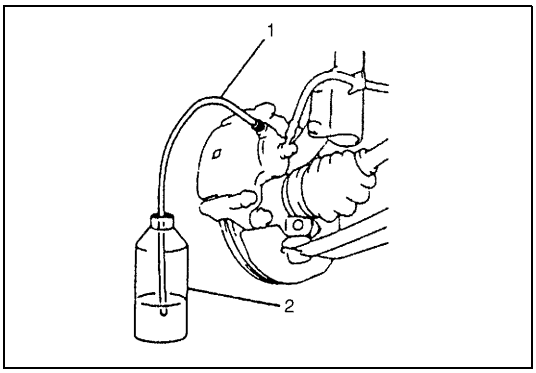

2) Remove bleeder plug cap.
   Attach a vinyl tube (1) to bleeder plug, and insert the other end into container (2).

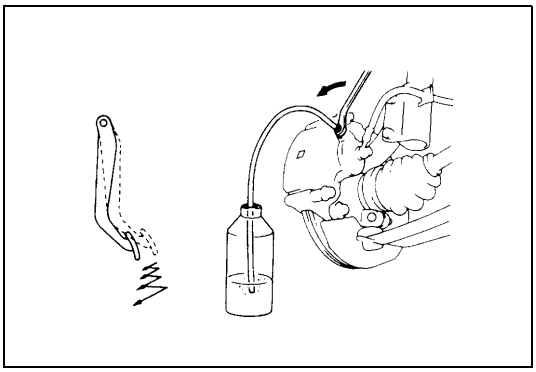

3) Depress brake pedal several times, and then while holding it depressed, loosen bleeder plug about one-third to one-half turn.
4) When fluid pressure in cylinder is almost depleted, retighten bleeder plug.
5) Repeat this operation until there are no more air bubbles in hydraulic line.

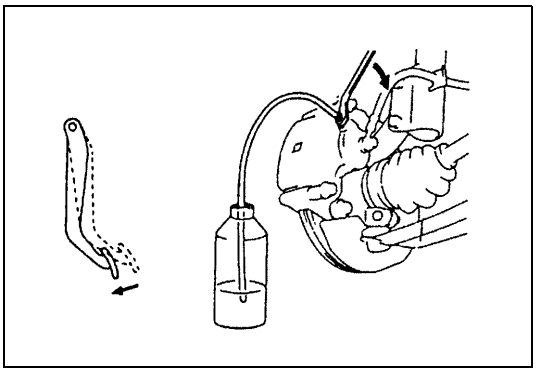

6) When bubbles stop, depress and hold brake pedal and tighten bleeder plug.

   Tightening torque
   Front bleeder plug : 11.0 N·m (1.1 kg-m, 8.0 lb-ft)
   Rear bleeder plug : 8.0 N·m (0.8 kg-m, 6.0 lb-ft)

7) Then attach bleeder plug cap.

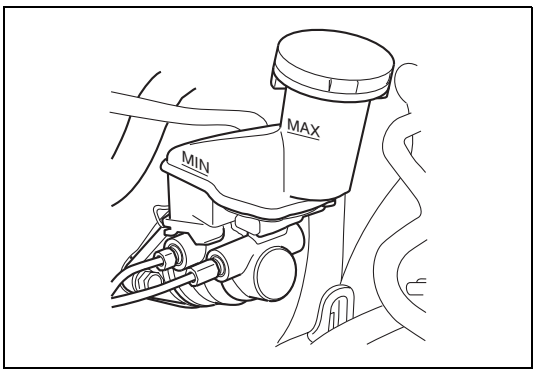

8) After completing bleeding operation, apply fluid pressure to pipe line and check for leakage.
9) Replenish fluid into reservoir up to specified level.
10) Check brake pedal for sponginess. If found spongy, repeat entire procedure of bleeding.

FRONT BRAKE

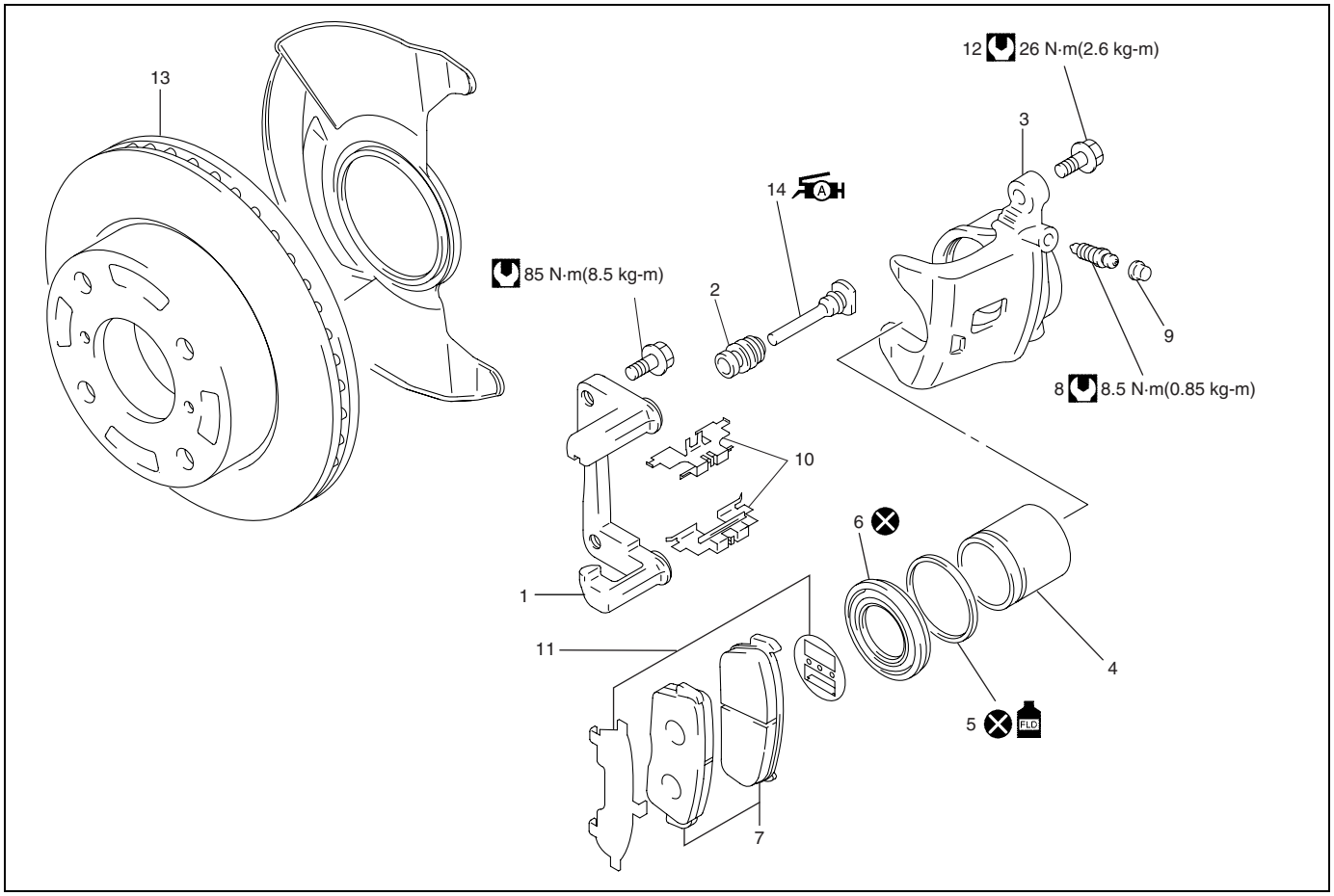

	1. Brake caliper carrier		9. Bleeder plug cap
	2. Boot		10. Pad spring
	3. Caliper		11. Anti noise shim
	4. Disc brake piston		12. Caliper pin bolt
FLD	5. Piston seal : Apply fluid (Brake, power steering or automatic transmission fluid).		13. Brake disc
FLD	6. Cylinder boot : Apply fluid (Brake, power steering or automatic transmission fluid).	A	14. Slide pin : Apply lithium grease (99000-25010).
	7. Brake pad		Tightening torque
	8. Bleeder plug		Do not reuse.

BRAKE PAD

REMOVAL

1) Loosen wheel nuts and with vehicle lifted up, remove wheels.

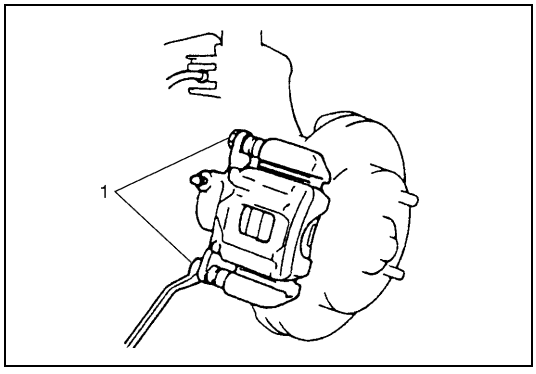

2) Remove caliper pin bolts (1).

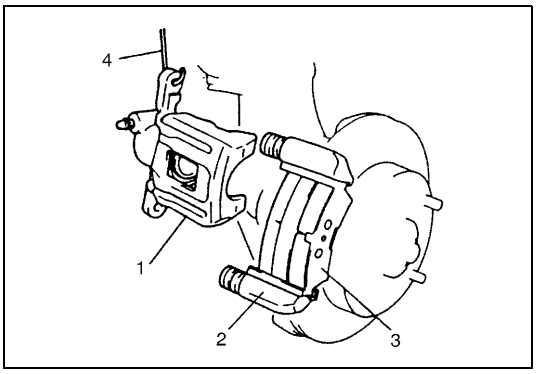

3) Remove caliper (1) from caliper carrier (2).

NOTE:

Hang removed caliper (1) with a wire hook (4) or the like so as to prevent brake hose from bending and twisting excessively or being pulled.
Don't operate brake pedal with brake pads removed.

4) Remove brake pads (3).

INSPECTION

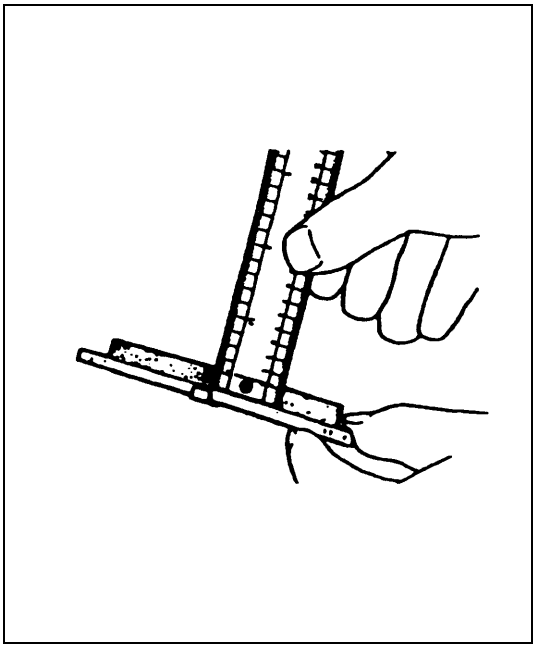

Check pad lining for wear. When wear exceeds limit, replace with new one.

CAUTION:

Never polish pad lining with sandpaper. If lining is polished with sandpaper, hard particles of sandpaper will be deposited in lining and may damage disc. When pad lining requires correction, replace it with a new one.

Brake pad thickness (lining thickness)
Standard : 10 mm (0.40 in.)
Limit : 1 mm (0.04 in.)

NOTE:

When pads are removed, visually inspect caliper for brake fluid leak. Correct leaky point, if any.

INSTALLATION

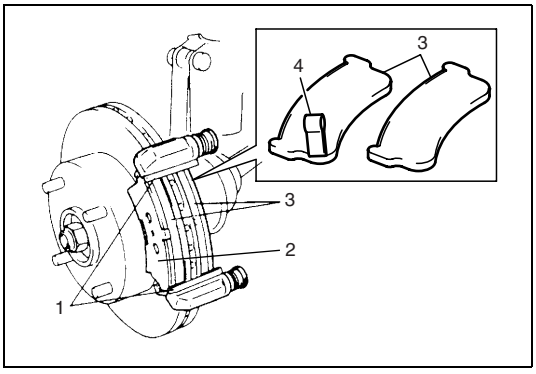

1) Set brake pad springs (1) and shim (2) and install brake pads (3).

NOTE:

For right side brake, install pad with wear indicator (4) to vehicle center side.

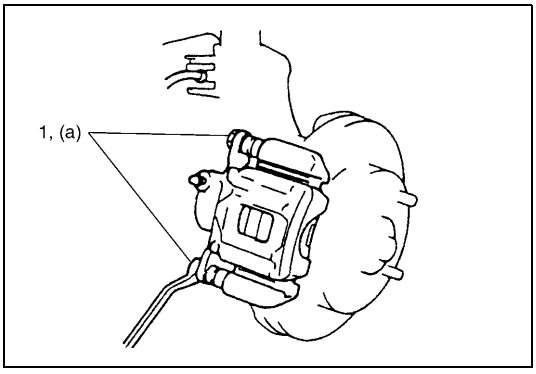

2) Install caliper and tighten caliper pin bolts (1) to specified torque.

Tightening torque
Caliper pin bolts (a) : 26 N·m (2.6 kg-m, 19.0 lb-ft)

3) Tighten wheel temporarily and lower lift.

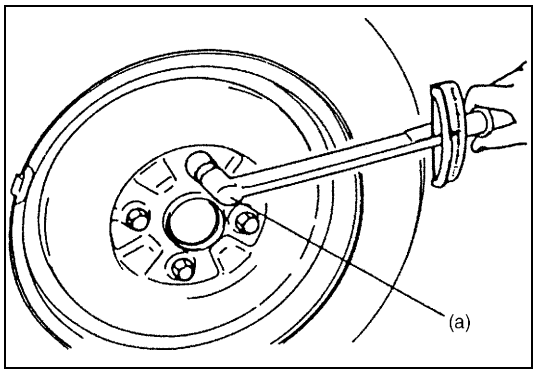

4) Tighten wheel nuts to specified torque.

Tightening torque
Wheel nuts (a) : 85 N·m (8.5 kg-m, 61.5 lb-ft)

5) After completion of installation, check for brake effectiveness.

CALIPER ASSEMBLY

REMOVAL

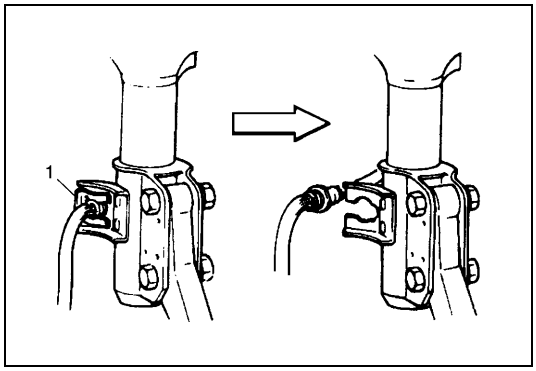

1) Hoist vehicle and remove wheel.
2) Remove E-ring (1).

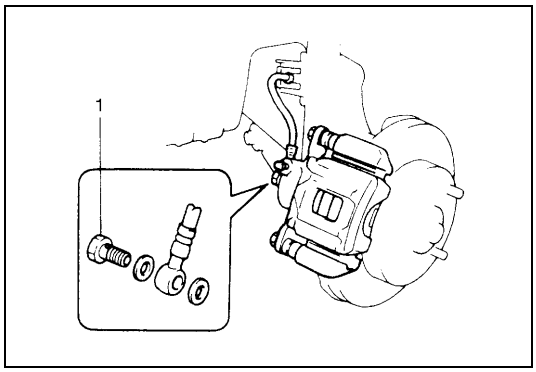

3) Loosen flexible hose joint bolt (1) a little at caliper.

CAUTION:
Be careful not to twist flexible hose while loosening the bolt.

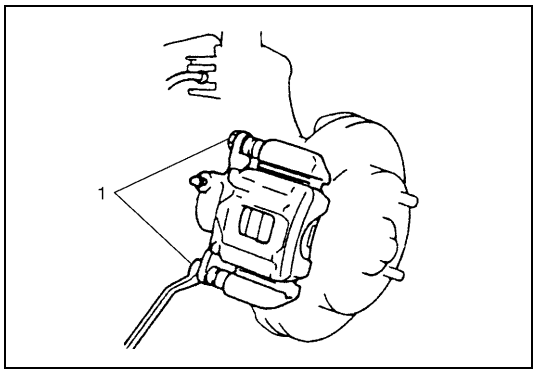

4) Remove caliper pin bolts (1).
5) Remove caliper from caliper carrier.
6) Disconnect flexible hose from caliper using care not to twist it. As this will allow brake fluid to flow out of flexible hose, have a container ready beforehand.

DISASSEMBLY

CAUTION:
Clean around caliper with brake fluid before disassembly.

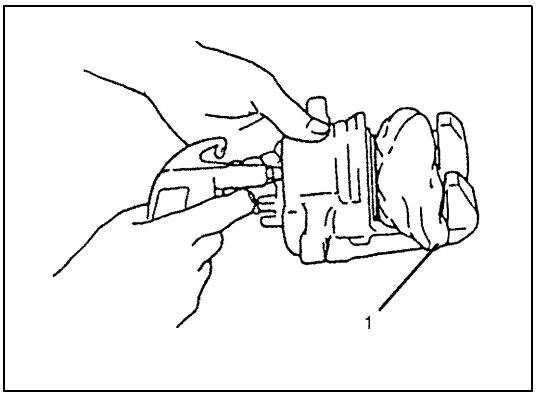

1) Remove piston with air blown into flexible hose bolt installation hole.

WARNING:
Do not apply too highly compressed air which will cause piston to jump out of cylinder. Place a cloth (1) to prevent piston from damage. It should be taken out gradually with moderately compressed air. Do not place your fingers in front of piston when using compressed air.

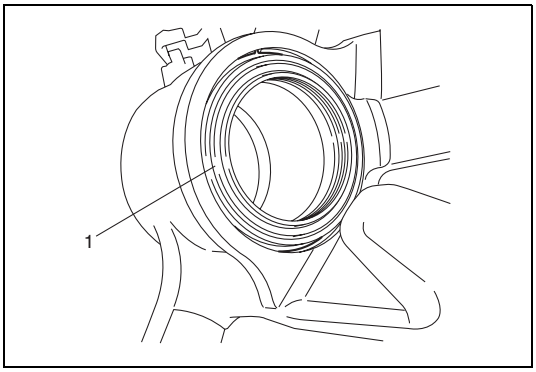

2) Remove cylinder boot (1).

CAUTION:
Use care not to cause damage to cylinder boot.

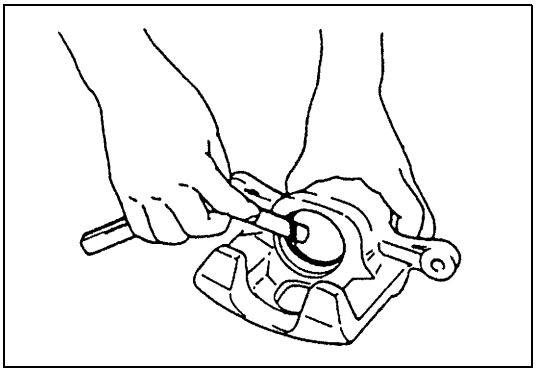

3) Remove piston seal using a thin blade like a thickness gauge, etc.

CAUTION:
Be careful not to damage inside (bore side) of cylinder.

4) Remove bleeder plug and cap from caliper.

INSPECTION

Pin Boot and Cylinder Boot

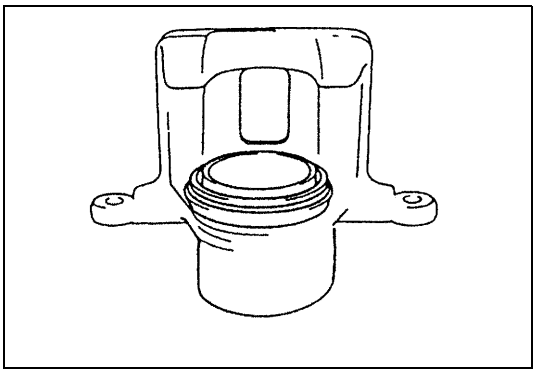

Check boots for breakage, crack and damage.
If defective, replace.

Piston Seal

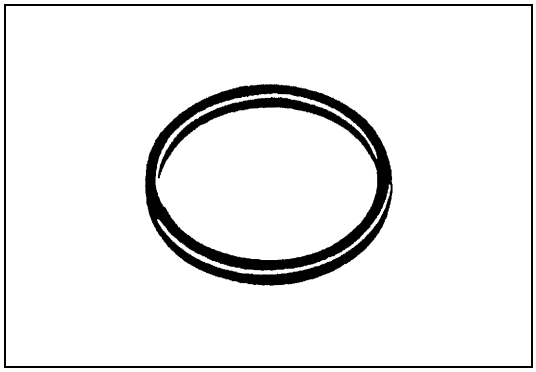

Excessive or uneven wear of pad lining may indicate unsmooth return of piston.
In such case, replace rubber seal.

ASSEMBLY

Assemble parts in reverse order of disassembly, observing the following instructions.

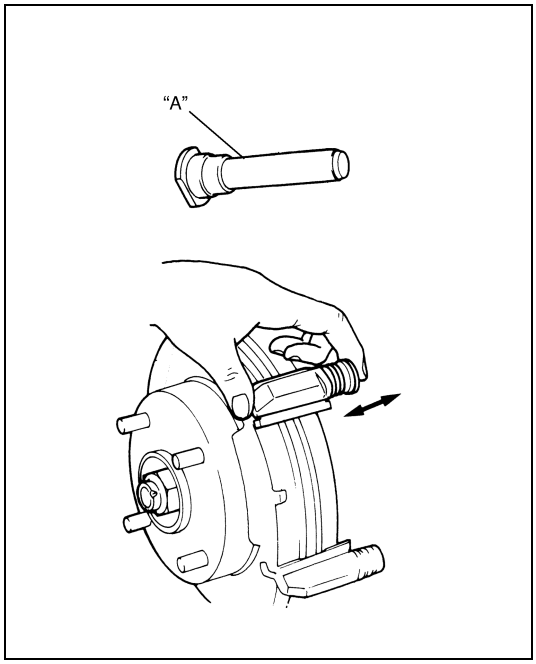

CAUTION:

- **Wash each part cleanly before installation in the same fluid as the one used in master cylinder reservoir.**
- **Never use other fluid or thinner.**
- **Before installing piston and piston seal to cylinder, apply fluid to them.**
- **After reassembling brake lines, bleed air from them.**
- **Install a new piston seal into groove in cylinder securely making sure that it is not twisted.**
- **Before installing caliper to carrier, install slide pin with grease applied into caliper carrier hole and check for its smooth movement in thrust direction.**

"A" : Grease 99000-25010

- Install piston seal to caliper referring to the following instructions.

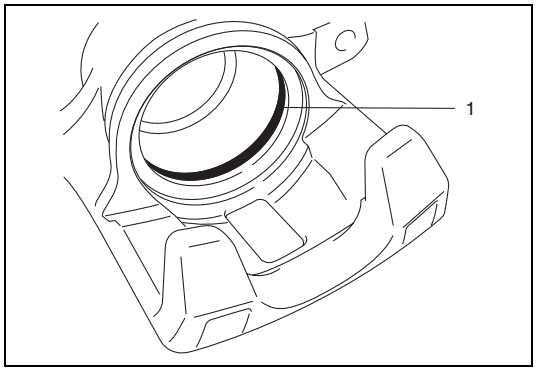

a) Replace with a new one at every overhaul. Fit piston seal (1) into groove in cylinder taking care not to twist it.

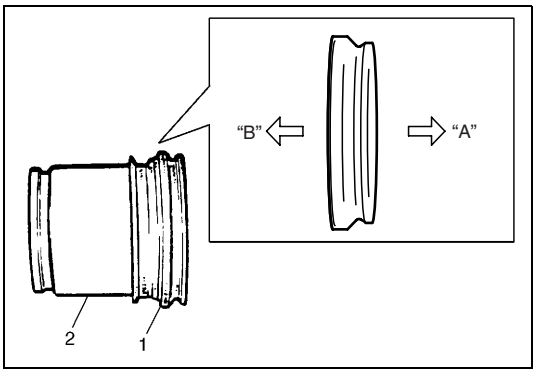

b) Before inserting piston (2) into cylinder, install boot (1) onto piston as shown.

"A" : 1-grooved side directed cylinder side
"B" : 2-grooved side directed pad side

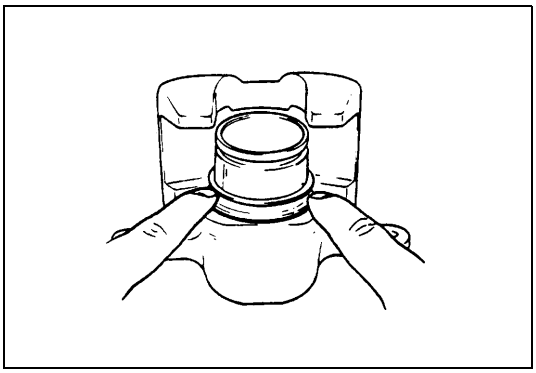

c) Fit boot as it is in figure into boot groove in cylinder with fingers.

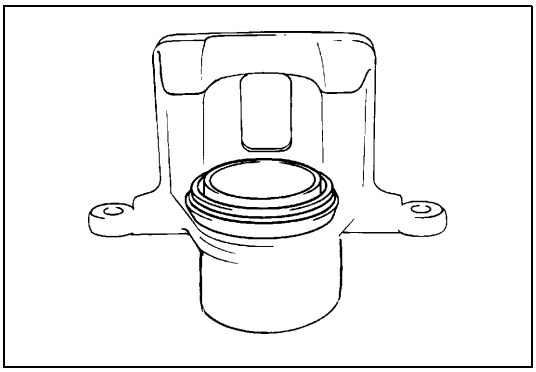

d) Insert piston into cylinder by hand and fit boot in boot groove in piston.

NOTE:

Check that boot is fitted in boot groove securely all around piston.

INSTALLATION

1) Connect caliper to flexible hose.
2) Apply grease to slide pin, then install caliper to caliper carrier.

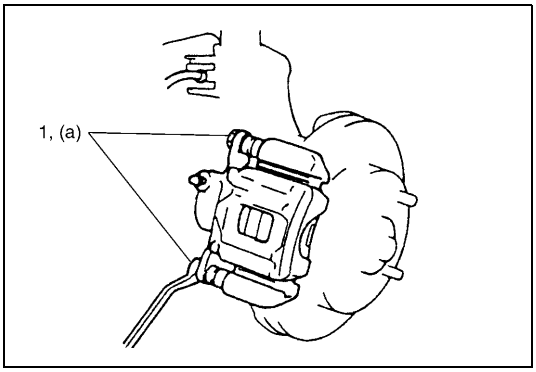

3) Torque caliper pin bolts (1) to specification.

NOTE:

Make sure that boots are fit into groove securely.

Tightening torque
Caliper pin bolts (a) : 26 N·m (2.6 kg-m, 19.0 lb-ft)

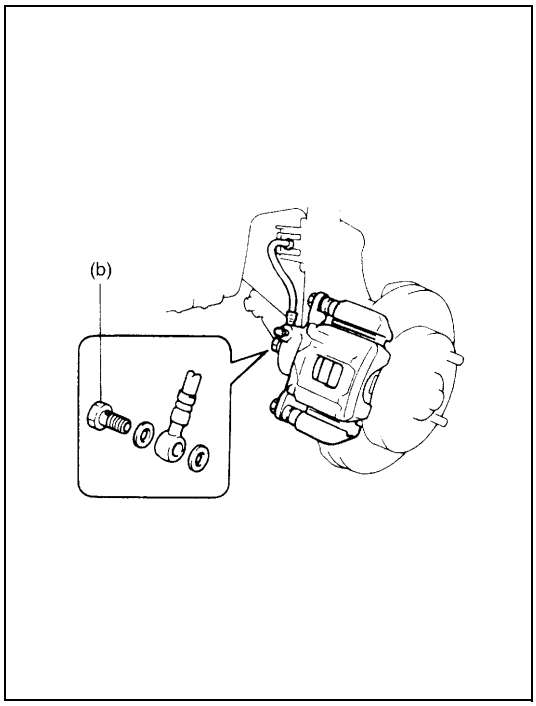

4) Torque flexible hose joint bolt to specification.

Tightening torque
Flexible hose joint bolt (b) : 23 N·m (2.3 kg-m, 17.0 lb-ft)

WARNING:
Make sure that flexible hose is not twisted when tightening joint bolt. If it is twisted, reconnect it using care not to twist it.

5) Install E-ring to strut securely.
6) Lower hoist.
7) Torque wheel nuts to specifications.

Tightening torque
Wheel nuts : 85 N·m (8.5 kg-m, 61.5 lb-ft)

8) After completing installation, fill reservoir with brake fluid and bleed air from brake system. Perform brake test and check each installed part for oil leakage.

BRAKE DISC

REMOVAL

1) Hoist vehicle and remove wheel.

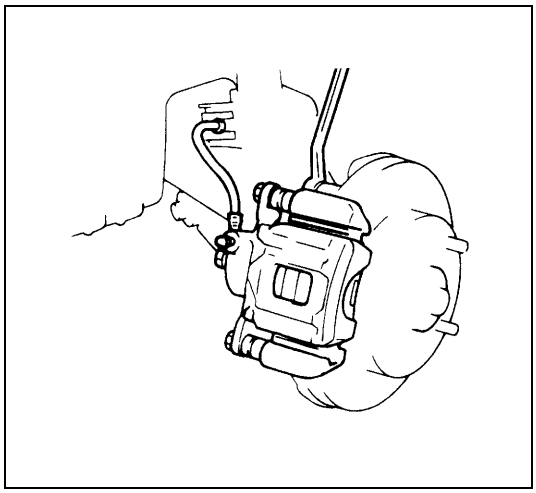

2) Remove caliper assembly by removing caliper carrier bolts (2 pcs)

CAUTION:
During removal, be careful not to damage brake flexible hose and not to depress brake pedal.

NOTE:
Hang removed caliper with a wire hook or the like so as to prevent brake hose from bending and twisting excessively or being pulled.
Don't operate brake pedal with brake pads removed.

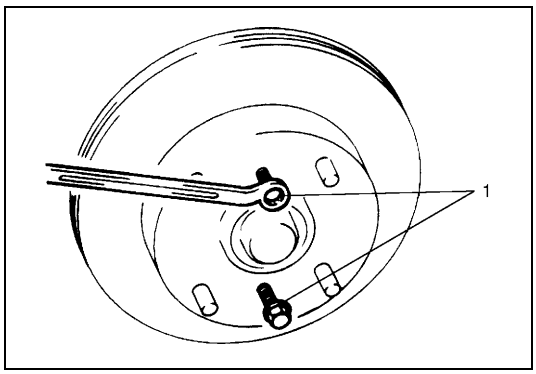

3) Pull brake disc off by using 8 mm bolts (1) (2 pcs).

INSPECTION

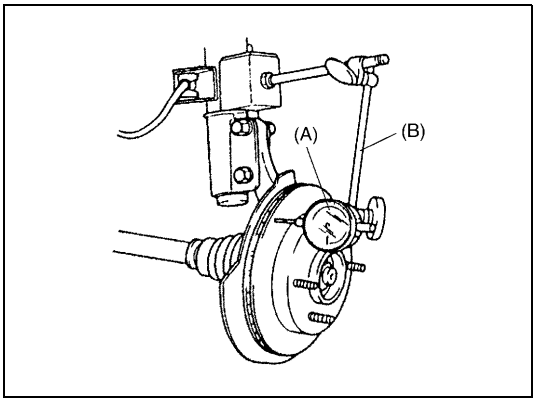

- Using magnetic stand and with dial gauge positioned at about 10 mm (0.39 in.) inward from periphery of disc, measure deflection of disc.
  If limit value is exceeded, replace correct or replace.

Disc deflection
Limit : 0.10 mm (0.004 in.) max.

Special tool
(A) : 09900-20606
(B) : 09900-20701

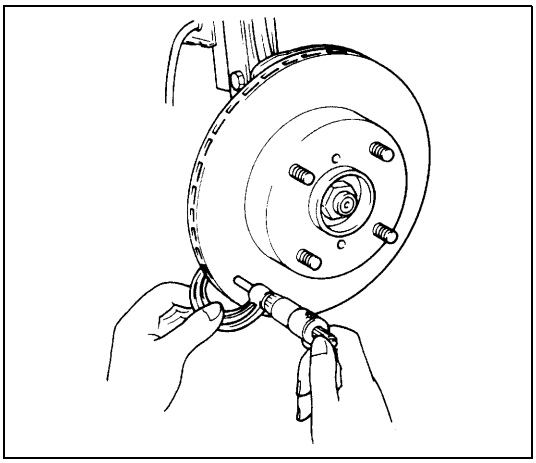

- Using micrometer, measure thickness of brake disc.
  If limit value is exceeded, replace brake disc.

Brake disc thickness
Standard : 17.0 mm (0.67 in.)
Limit : 15.0 mm (0.59 in.)

INSTALLATION

1) Install disc to wheel hub.
2) Install caliper assembly to steering knuckle.

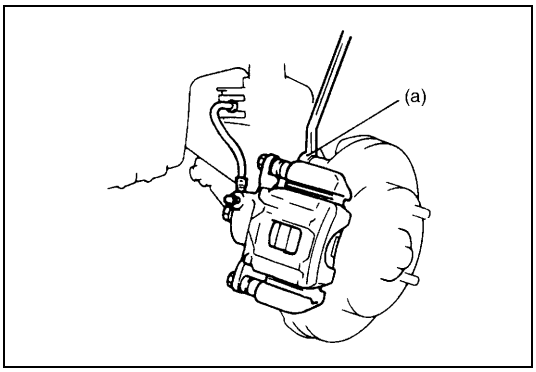

3) Torque caliper carrier bolts to specification.

Tightening torque
Caliper carrier bolts (a) : 85 N·m (8.5 kg-m, 61.5 lb-ft)

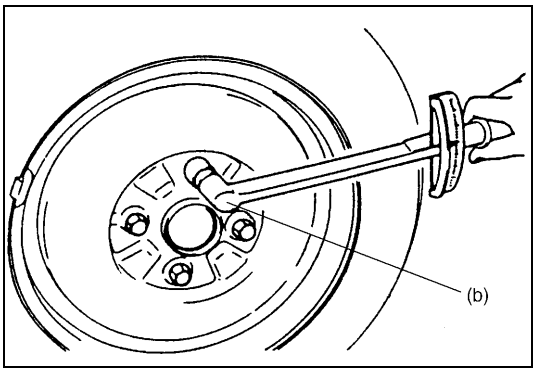

4) Torque front wheel nuts to specification.

Tightening torque
Wheel nuts (b) : 85 N·m (8.5 kg-m, 61.5 lb-ft)

5) Upon completion of installation, perform brake test.

REAR BRAKE

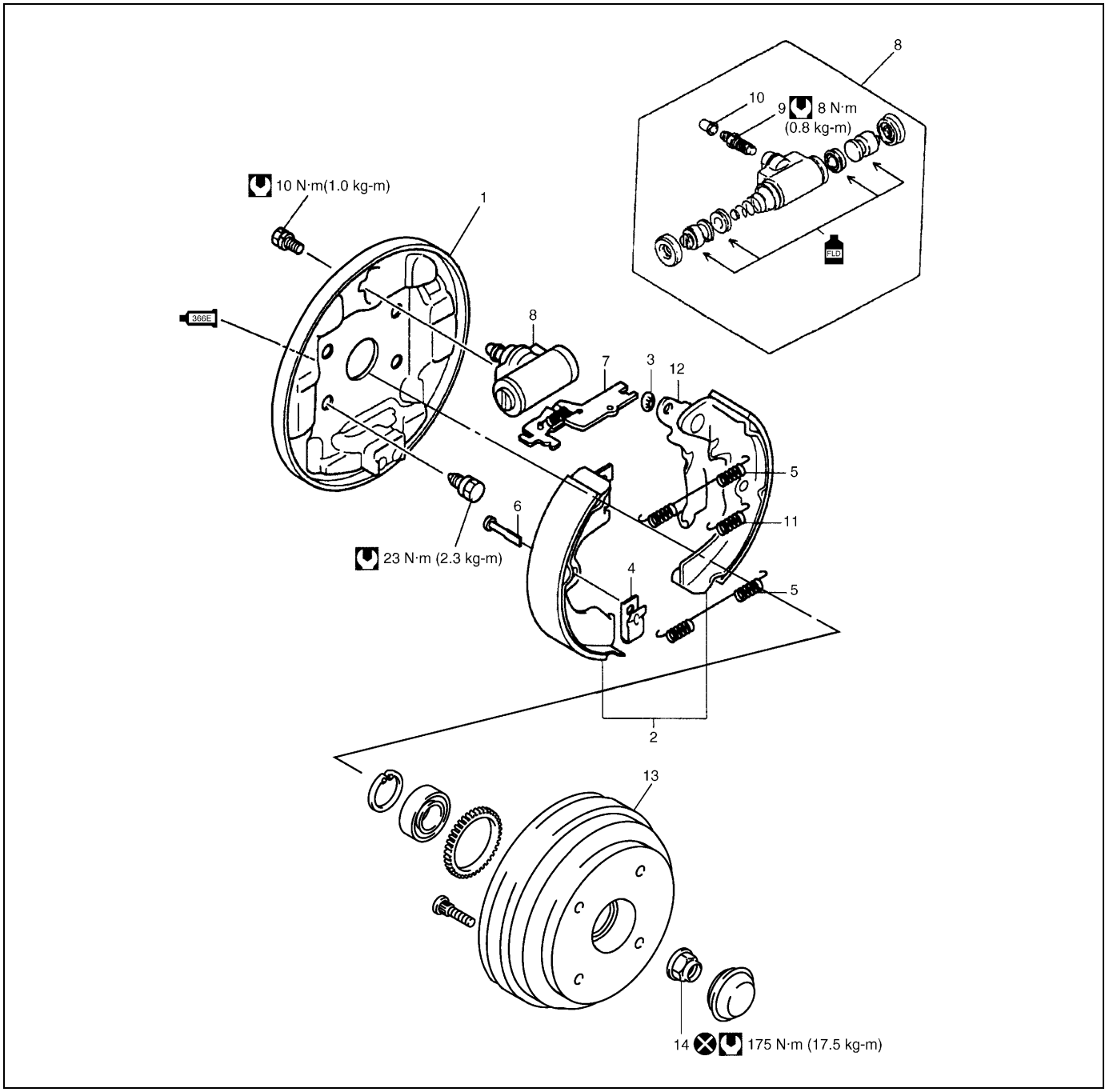

FLD	1. Brake back plate : Apply water tight sealant (99000-31090) to joint seam of brake back plate and rear axle	9. Bleeder plug
	2. Brake shoe	10. Bleeder plug cap
	3. Push nut	11. Parking lever spring
	4. Shoe hold down spring	12. Parking brake shoe lever
	5. Shoe return upper spring	13. Brake Drum
	6. Shoe hold down pin	14. Spindle nut (For 2WD vehicle only) : Calk spindle nut after tightening
	7. Brake strut	Tightening torque
FLD	8. Wheel cylinder : Apply brake fluid to piston cup	Do not reuse.

BRAKE DRUM

REMOVAL

1) With parking brake pulled up, lift vehicle and remove wheels.

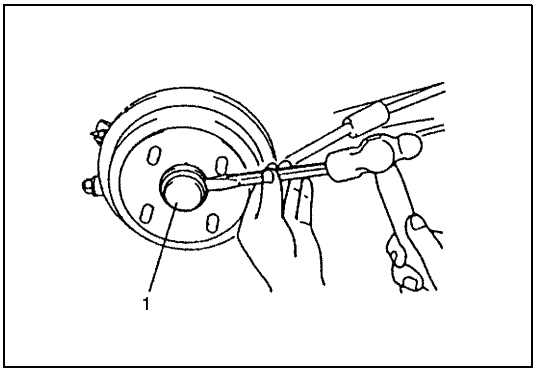

2) Remove spindle cap (1). (For 2WD vehicle only)

NOTE:

When removing cap with a chisel, tap it lightly at about 3 locations using care not to damage seat face of cap.

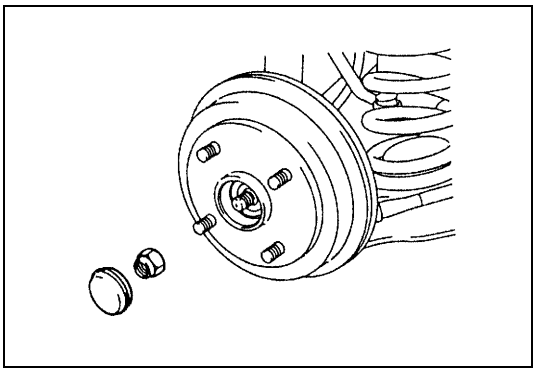

3) Uncaulk spindle nut, remove spindle nut. (For 2WD vehicle only)

4) Release parking brake lever (1).
5) Remove console box.

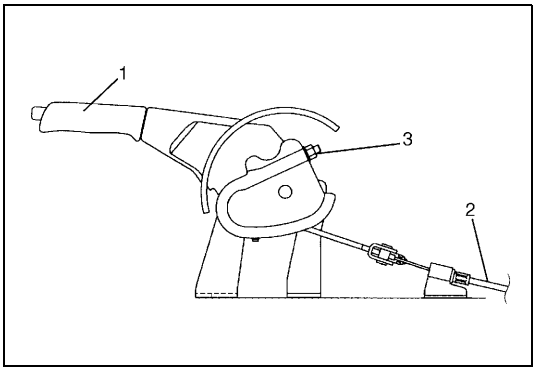

6) Loosen adjusting nut (3) for parking brake cable (2).

7) Remove brake drum.

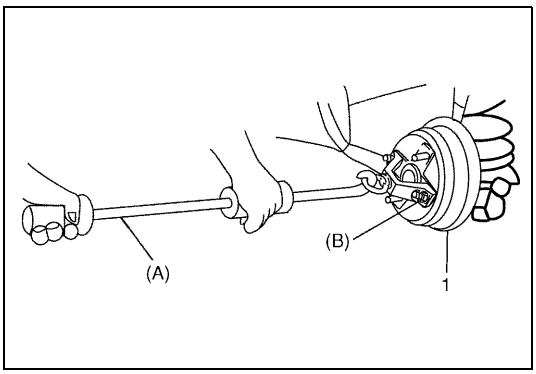

a) For 2WD vehicle :
Pull brake drum (1) off by using special tools.

Special tool
(A) : 09942-15510
(B) : 09943-17912

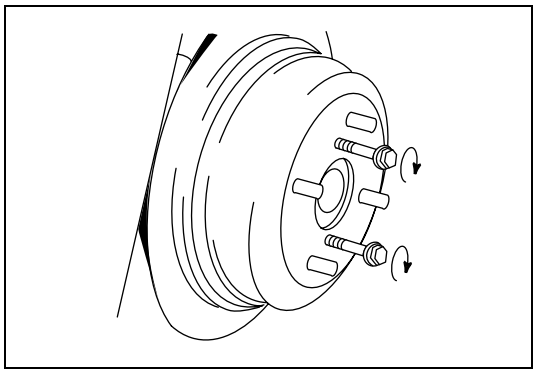

b) For 4WD vehicle :
Pull brake drum off by using 8 mm bolts.

INSPECTION

Brake Drum

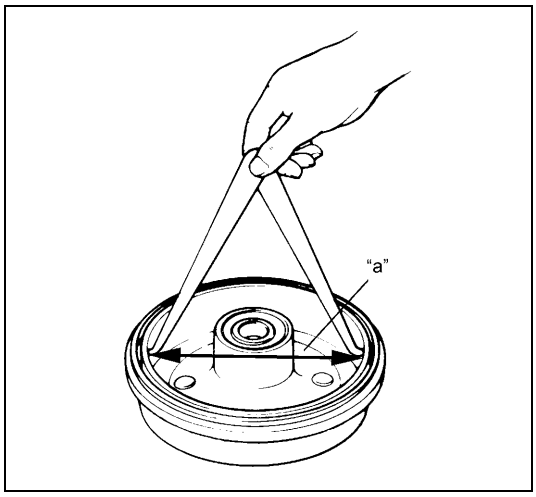

Inspect brake drum for wear.
If limit value of drum inner diameter is exceeded or uneven or stepped wear is excessive, replace drum.

Drum inner diameter "a"
Standard : 180 mm (7.09 in.)
Limit : 182 mm (7.17 in.)

NOTE:

When drum is removed, visually inspect wheel cylinder for brake fluid leakage. Correct leaky point, if any.

Brake Shoe

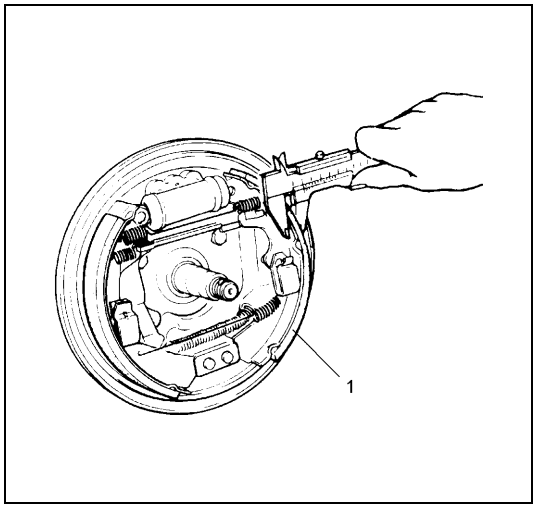

Measure thickness of brake shoe (1) (not including backing metal). Also, check surface of lining for hardening, excessive wear and oil.

Brake shoe thickness
Standard : 3.9 mm (0.15 in.)
Limit : 1.0 mm (0.04 in.)

CAUTION:

Never polish lining with sandpaper. If lining is polished with sandpaper, hard particles of sandpaper will be deposited in lining and may damage drum. When it is required to correct lining, replace it with a new one.

INSTALLATION

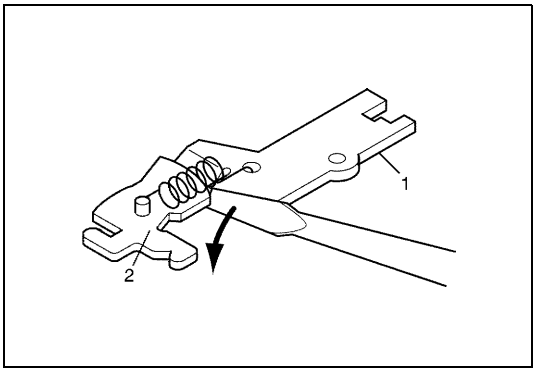

1) Put flat end rod or the like between rod (1) and ratchet (2) and pull ratchet as shown to maximize clearance between shoe and drum.

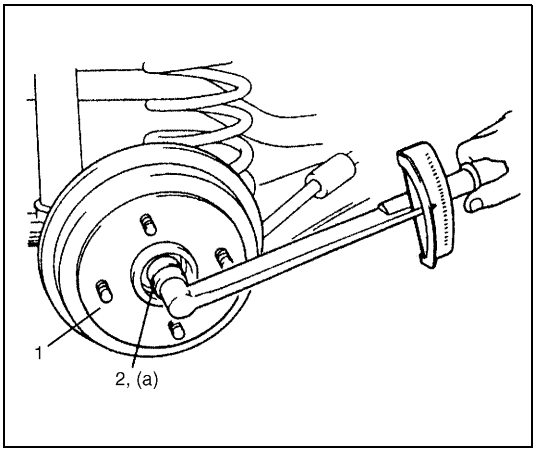

2) Install brake drum (1) after making sure that inside of brake drum and brake shoes are free from dirt and oil.
3) Install new spindle nut (2). (For 2WD vehicle only)
4) Tighten spindle nut (2) to specified torque. (For 2WD vehicle only)

Tightening torque
Spindle nut (a) : 175 N·m (17.5 kg-m, 127.0 lb-ft)

NOTE:

Removed spindle nut should be replaced with new one.

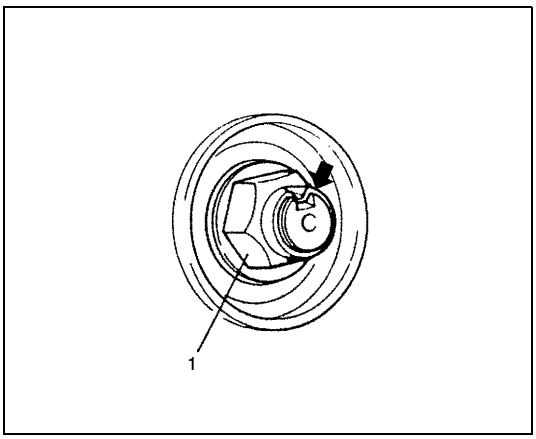

5) Calk spindle nut (1) as shown in figure. (For 2WD vehicle only)
6) Install spindle cap. (For 2WD vehicle only)

NOTE:

- **When installing spindle cap, hammer lightly several locations on the collar of cap until collar comes closely into contact with brake drum.**
- **If fitting part of cap is deformed or damaged or if it is fitted loosely, replace with new one.**

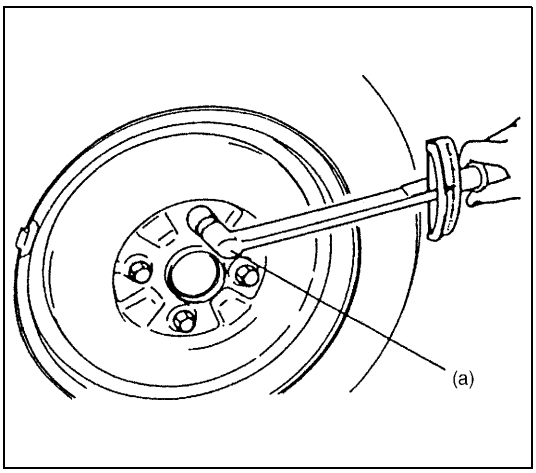

7) Tighten wheel nuts to specified torque.

Tightening torque
Wheel nuts (a) : 85 N·m (8.5 kg-m, 61.5 lb-ft)

8) Upon completion of all jobs, depress brake pedal with about 30 kg (66 lbs) load 3 to 5 times so as to obtain proper drum-to-shoe clearance.
9) Adjust parking brake cable. Refer to “PARKING BRAKE INSPECTION AND ADJUSTMENT”.
10) Check to make sure that brake drum is free of dragging and brake works properly. Then remove vehicle from lift and perform brake test.

BRAKE SHOE

REMOVAL

1) Remove brake drum referring to “BRAKE DRUM”.

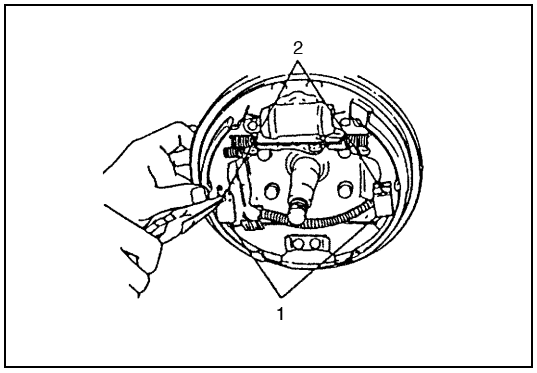

2) Remove shoe hold down springs (1) by turning shoe hold down pins (2).
3) Remove return springs, brake shoes and strut.

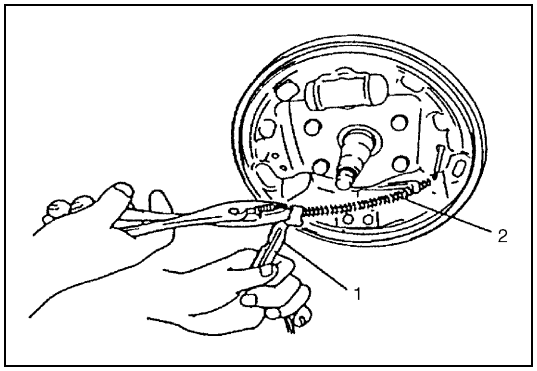

4) Disconnect parking brake shoe lever (1) from parking brake cable (2).

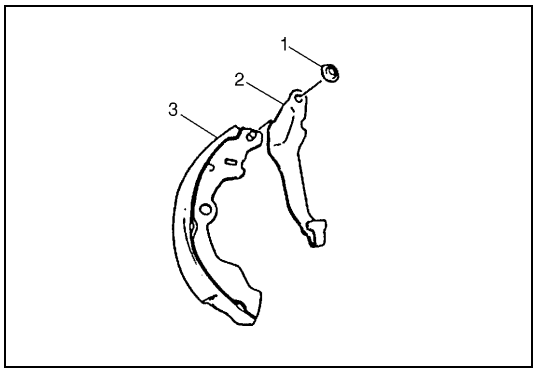

5) Remove push nut (1).
6) Remove parking brake shoe lever (2) from shoe rim (3).

INSPECTION

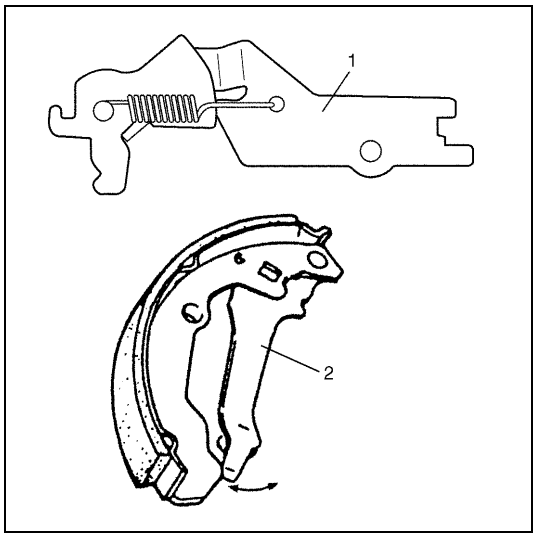

- Check ratchet of brake strut (1) assembly for wear or damage.
- Check shoe return spring, strut shoe return spring and shoe hold down spring for damage, corrosion and weakening.
- Check for smooth movement of brake shoe lever (2) along shoe rim.

CAUTION:
Use a new push nut.

INSTALLATION

Install parts in reverse order of removal, noting the followings.

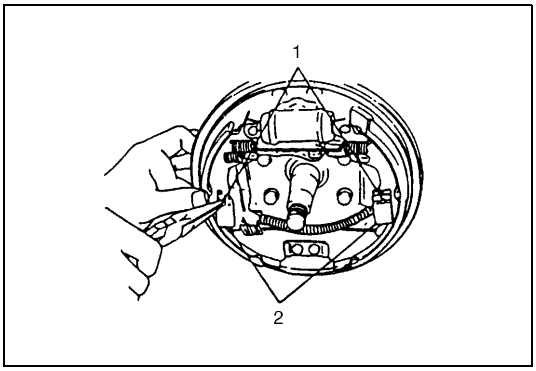

- Install shoe hold down springs (2) by pushing them down in place and turning hold down pins (1).
- For procedure hereafter referring to “BRAKE DRUM”.

WHEEL CYLINDER

REMOVAL

1) Remove brake drum referring to “BRAKE DRUM”.
2) Remove break shoe referring to “BRAKE SHOE”.

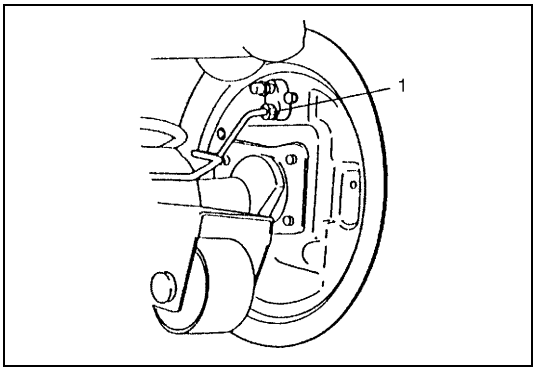

3) Loosen brake pipe flare nut (1) but only within the extent that fluid does not leak.

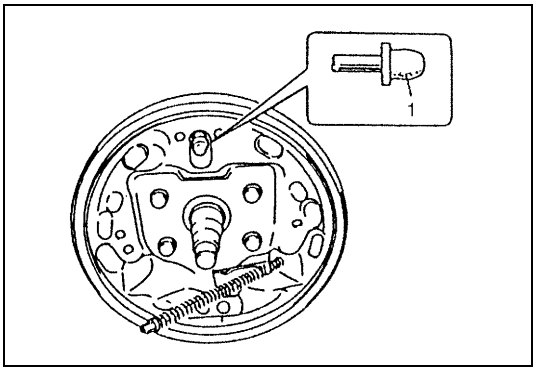

4) Remove wheel cylinder mounting bolts. Disconnect brake pipe from wheel cylinder and put bleeder plug cap (1) onto pipe to prevent fluid from spilling.

INSPECTION

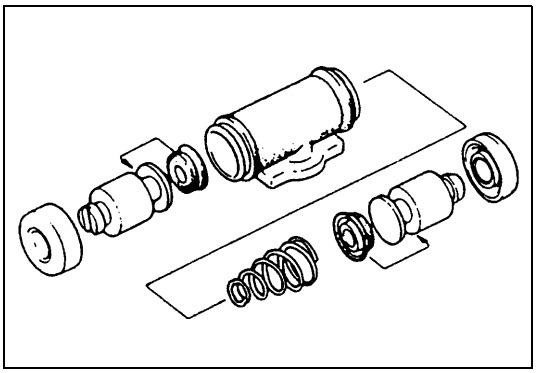

Inspect wheel cylinder disassembled parts for wear, cracks, corrosion or damage.

NOTE:

Clean wheel cylinder components with brake fluid.

INSTALLATION

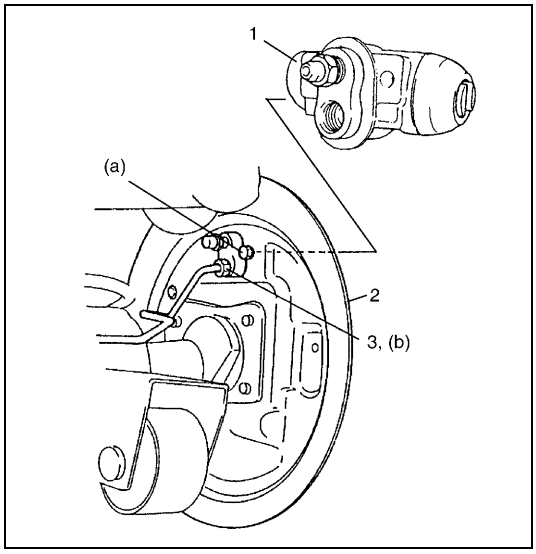

1) Take off bleeder plug cap from brake pipe and connect pipe to wheel cylinder (1) just enough to prevent fluid from leaking.
2) Install wheel cylinder (1) to brake back plate (2) to specified torque.

Tightening torque
Cylinder mounting bolts (a) : 10 N·m (1.0 kg-m, 7.5 lb-ft)

3) Tighten flare nut (3) of brake pipe to specified torque.

Tightening torque
Rear brake pipe flare nut (b) : 16 N·m (1.6 kg-m, 11.5 lb-ft)

4) Install bleeder plug cap.
5) Install brake shoes. (Refer to “BRAKE SHOE”.)
6) Install brake drum. (Refer to “BRAKE DRUM”.)
7) Fill reservoir with brake fluid and bleed brake system. (For bleeding operation referring to “AIR BLEEDING OF BRAKE SYSTEM”.)
8) Upon completion of all jobs, depress brake pedal with about 30 kg (66 lbs) load 3 to 5 times so as to obtain proper drum-to-shoe clearance.
   Adjust parking brake cable.
9) Install wheel and tighten wheel nuts to specified torque.

Tightening torque
Wheel nuts : 85 N·m (8.5 kg-m, 61.5 lb-ft)

10) Check to ensure that brake drum is free from dragging and proper braking is obtained. Then remove vehicle from hoist and perform brake test (foot brake and parking brake).
11) Check each installed part for oil leakage.

BRAKE BACK PLATE (FOR 2WD VEHICLE)

REMOVAL

1) Remove brake drum referring to “BRAKE DRUM”.
2) Remove brake shoe referring to “BRAKE SHOE”.
3) Remove wheel cylinder referring to “WHEEL CYLINDER”.

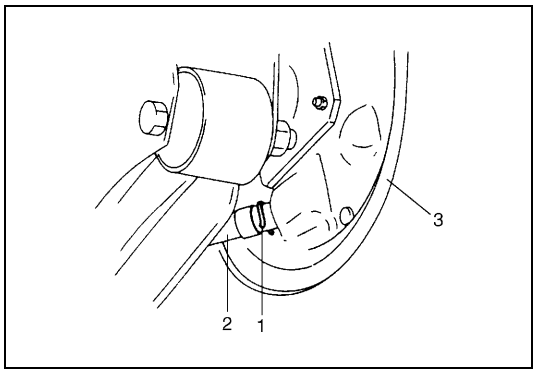

4) Remove parking brake cable securing clip (1) and disconnect brake cable (2) from brake back plate (3).

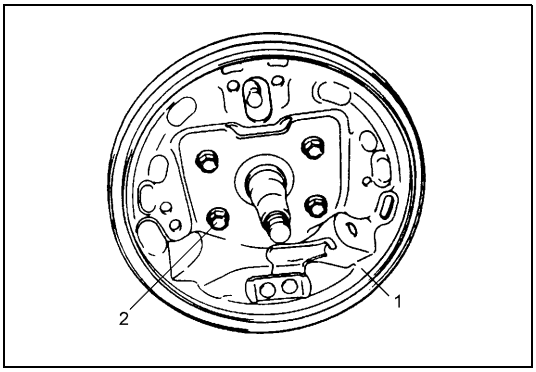

5) Remove brake back plate (1) by removing bolts (2).

INSTALLATION

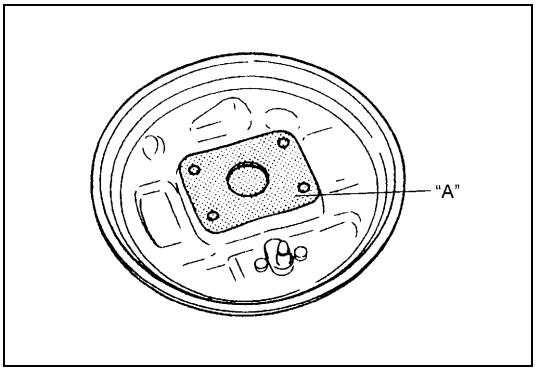

1) Apply water tight sealant to mating surfaces of brake back plate and rear axle.

"A" : Sealant 99000-31090

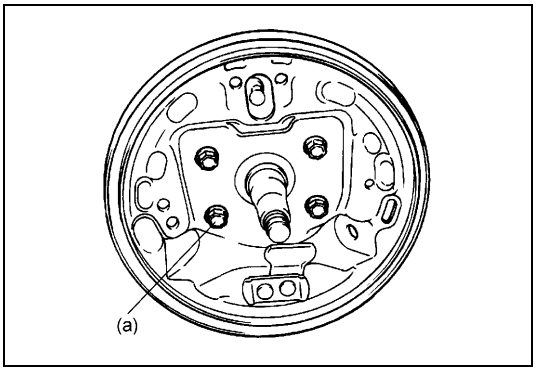

2) Install brake back plate and tighten back plate bolts to specified torque.

Tightening torque
Brake back plate bolts (a) : 23 N·m (2.3 kg-m, 17.0 lb-ft)

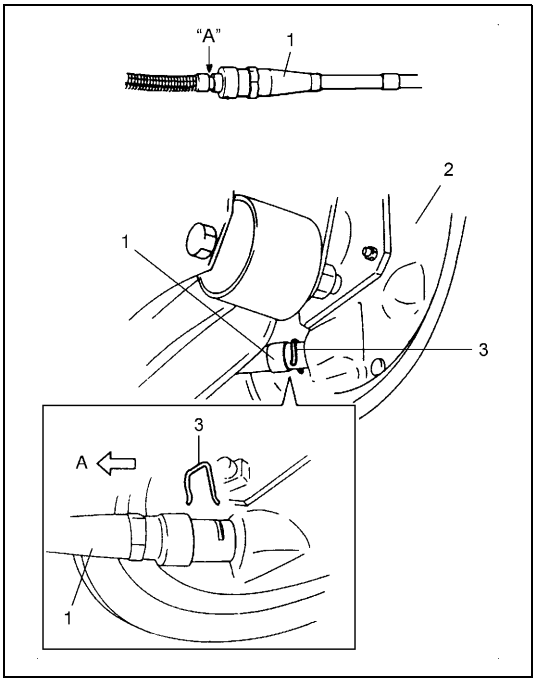

3) Apply water tight sealant where plate and cable contact, and run parking brake cable (1) through brake back plate (2) and secure it with clip (3).

"A" : Sealant 99000-31090

4) Install wheel cylinder, and tighten wheel cylinder bolts and brake pipe flare nut to specified torque. (Refer to "WHEEL CYLINDER".)
5) For procedure hereafter referring to "WHEEL CYLINDER".

A: Forward

BRAKE BACK PLATE (FOR 4WD VEHICLE)

REMOVAL AND INSTALLATION

Refer to “REAR AXLE SHAFT AND WHEEL BEARING (4WD VEHICLE)” in Section 3E.

MASTER CYLINDER

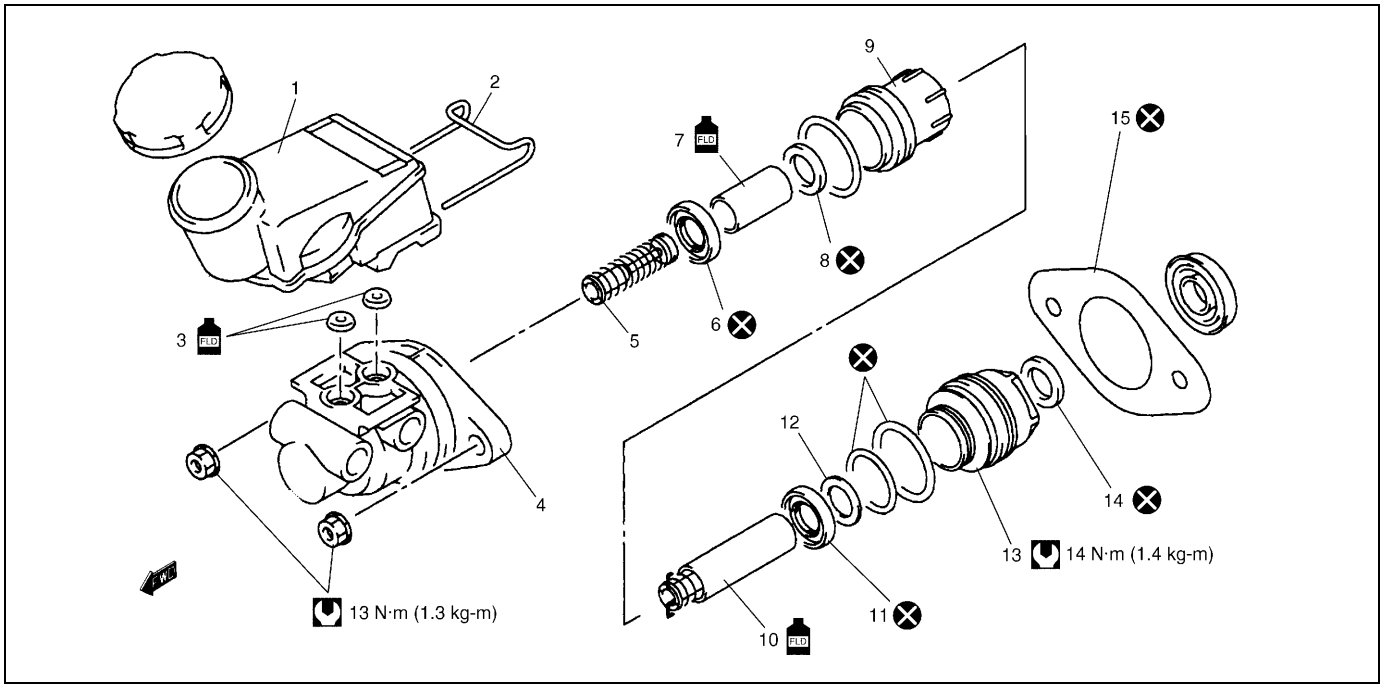

	1. Reservoir tank		9. Sleeve		Tightening torque
	2. Retainer	FLD	10. Primary piston : Apply brake fluid to contact surface of cup.		Do not reuse.
FLD	3. Grommet : Apply brake fluid.		11. Primary cup : Confirm installing direction.		
	4. Master cylinder body		12. Washer		
	5. Secondary return spring		13. Cap		
	6. Secondary cup : Confirm installing direction Size of cup : 6=11>14>8 .		14. Cap cup : Confirm installing direction.		
FLD	7. Secondary piston : Apply brake fluid to contact surface of cup.		15. Master cylinder gasket		
	8. Sleeve cup : Confirm installing direction.				

MASTER CYLINDER RESERVOIR

REMOVAL

1) Remove master cylinder.

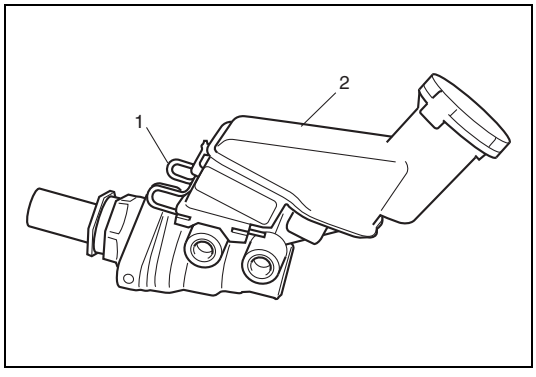

2) Pull out retainer (1) and remove reservoir (2).

INSTALLATION

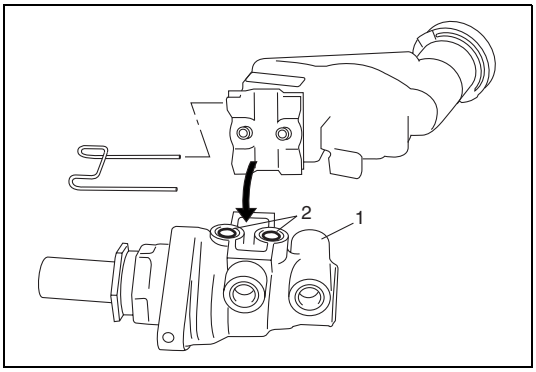

1) Apply brake fluid to new grommets and attach grommets (2) to master cylinder (1).

NOTE:

Be sure to use new grommets.

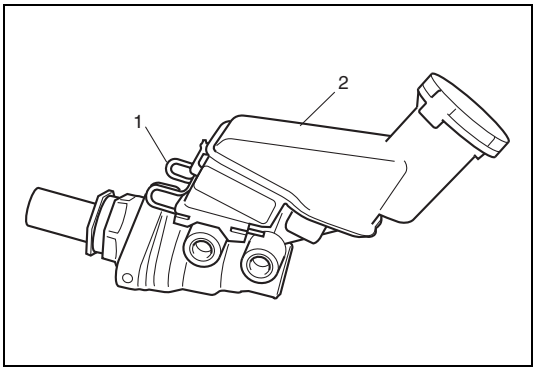

2) Install reservoir (2) to master cylinder and insert retainer (1).
3) Install master cylinder.
4) Fill reservoir with specified brake fluid up to MAX mark on it.
5) After installation, purge air and check for brake fluid leakage.

MASTER CYLINDER ASSEMBLY

REMOVAL

1) Clean outside of master cylinder.
2) Drain brake fluid in reservoir.

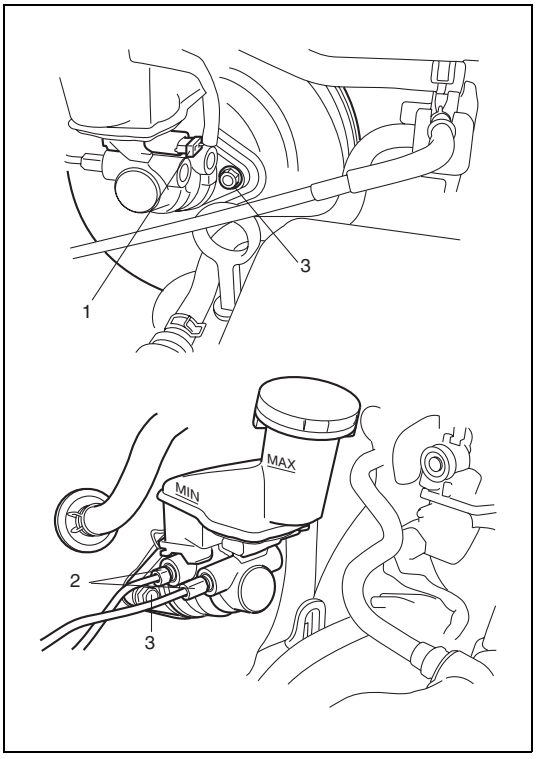

3) Disconnect fluid level switch coupler (1) on reservoir.
4) Disconnect brake pipes (2) connected to master cylinder.

CAUTION:

Do not allow brake fluid to get on painted surface. Painted surface will be damaged by brake fluid, flush it with water immediately if any fluid is spilled.

5) Remove master cylinder fixing nuts (3).
6) Remove master cylinder and master cylinder gasket.

INSPECTION

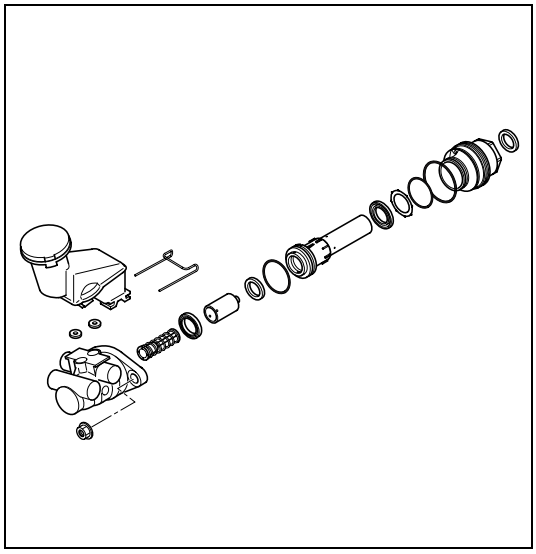

1) Check all disassembled parts for wear and damage.
   If anything faulty is found, replace.

CAUTION:
- **Wash disassembled parts with brake fluid.**
- **Do not reuse piston cups.**

2) Check screw hole in master cylinder for gall or corrosion.
   If anything faulty is found, replace.

CAUTION:
Wash master cylinder with new brake fluid. Do not use cloth to dry cylinder so as to avoid fibers being attached to internal surface of cylinder.

DISASSEMBLY

1) Loosen cap and remove it.

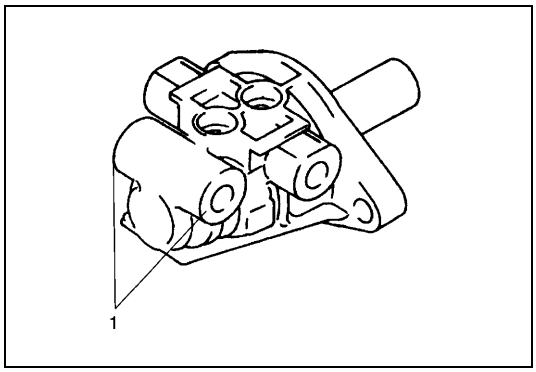

NOTE:
For this work, apply a cloth to outlet port at the tip end (1) of master cylinder body and secure cylinder using soft jawed vise.

2) Remove component parts from master cylinder body.

ASSEMBLY

CAUTION:
- **Never use any mineral oil such as kerosene oil and gasoline when washing and assembling parts.**
- **Check inside of cylinder wall, pistons and cup seals are free from any foreign objects such as dust and dirt and use case not to cause any damage with a tool during assembly.**
- **Do not drop parts. Do not use any part which has been dropped.**

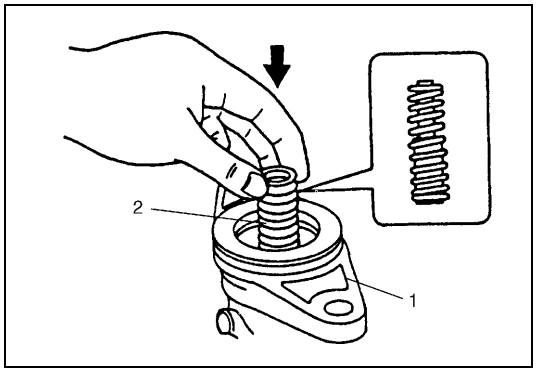

1) Apply brake fluid to inside of cylinder and contact surface of piston assembly.
   Install secondary return spring (2) to cylinder body (1) with noting spring direction.

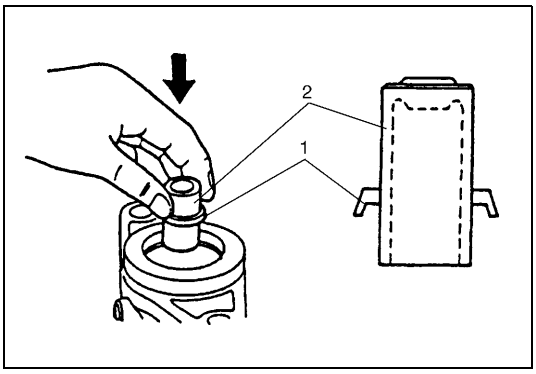

2) Attach secondary cup (1) to secondary piston (2), they install it to cylinder body such a direction as shown.

NOTE:

- **Secondary cup is the same as primary cup.**
- **Diameter of secondary cup is the largest compared with sleeve cup and cap cup.**

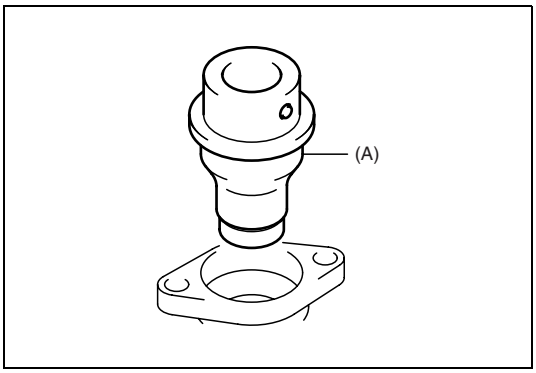

3) Push secondary cup to the bottom by using special tool.

Special tool
(A) : 09951-18220

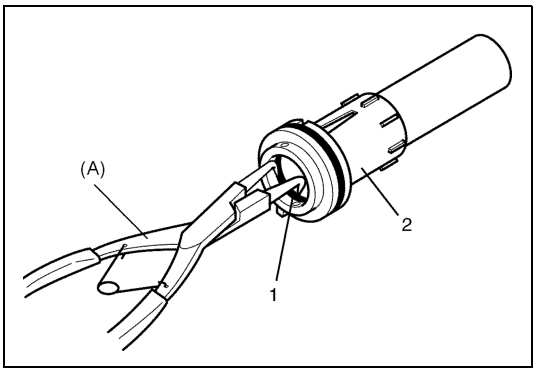

4) Remove O-ring (1) from sleeve (2).

Special tool
(A) : 09900-06106

CAUTION:
Do not cause any damage to inside of sleeve.
If caused, replace primary piston assembly.

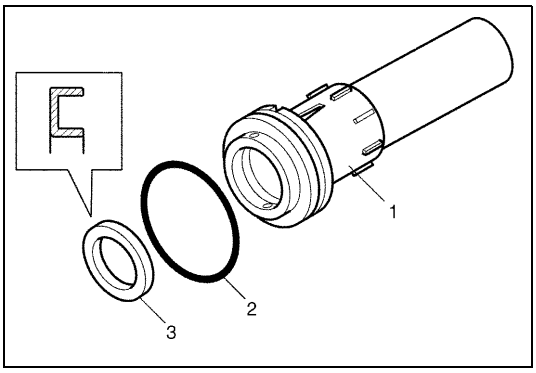

5) Install sleeve cup (3) and O-ring (2) to sleeve (1) such a direction as shown.

NOTE:

- **Diameter of sleeve cup and O-ring are smaller than those of cap.**
- **O-ring is the same as that of smaller one of cap O-ring.**

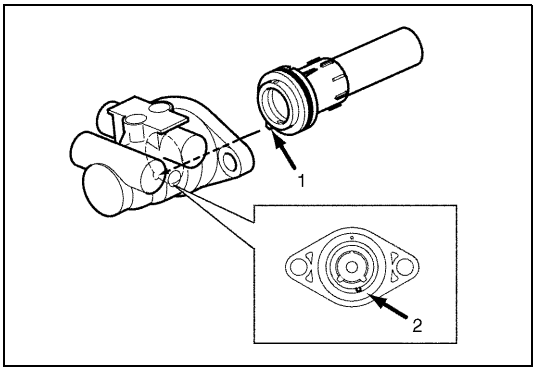

6) Install sleeve assembly with aligning protrusion (1) of sleeve and dent (2) of cylinder body.

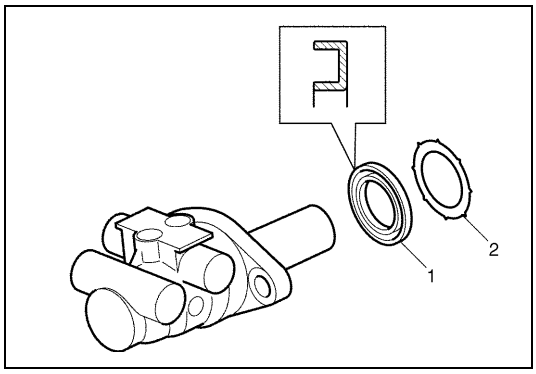

7) Install cup (1) and washer (2) such a direction as shown.

NOTE:

- **Primary cup is the same as secondary cup.**
- **Primary cup is the largest compared with that of cap and sleeve.**

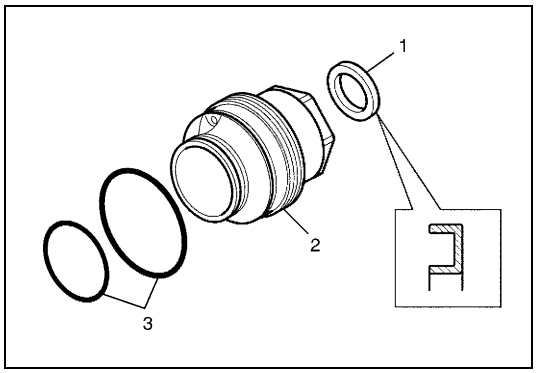

8) Remove cap cup (1) from cap with caring not to cause any damage to inside of cap (2).
9) Install cap cup and O-rings (3) to cap such a direction as shown.

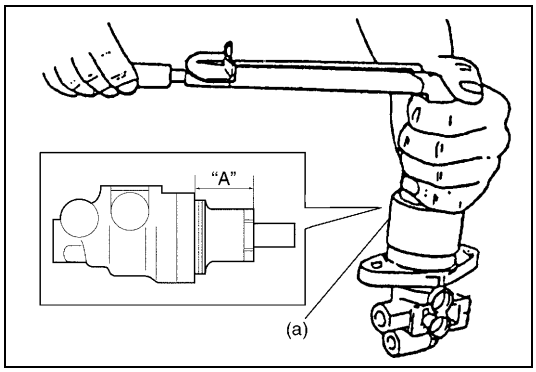

10) Install cap and tighten it to specified torque, then confirm the length "A".

Tightening torque
Cap (a) : 14 N·m (1.4 kg-m, 10.5 lb-ft)

Cap installation position
"A" : Less than 26 mm (1.02 in.)

INSPECTION AFTER ASSEMBLY

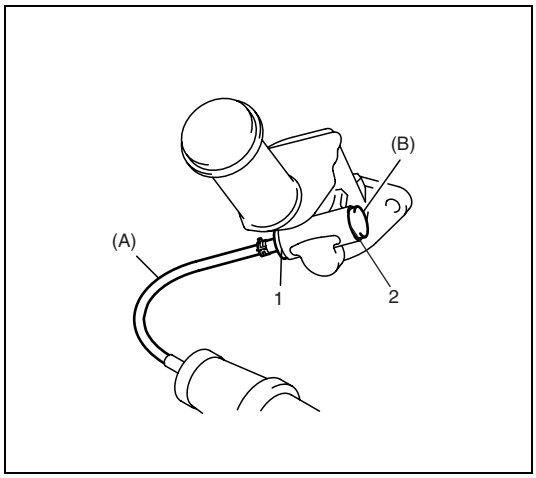

1) Install radiator cap test with special tool to master cylinder port (1).

NOTE:

For without ABS vehicle, install special tool (B) to opposite side port (2).

Special tool
(A) : 09952-46010
(B) : 09952-26020

2) Apply air and confirm that pressure is not applied.

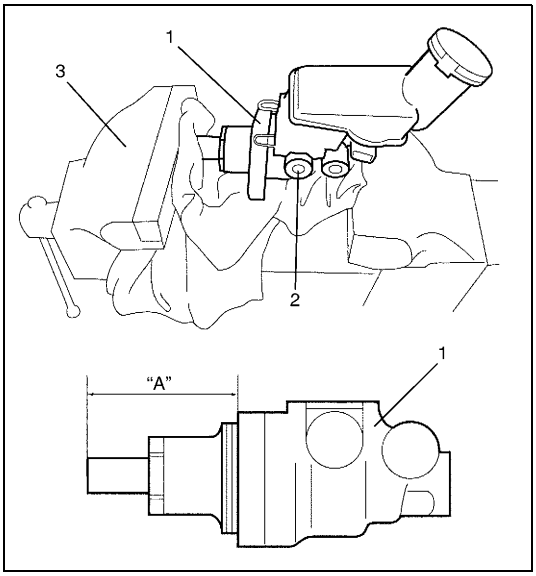

3) Set master cylinder (1) on vise (3) and adjust "A" to be the following.

Cap adjustment position
"A" : 50 mm (1.97 in.)

4) Apply air with radiator cap tester, and confirm that 50 kPa pressure is applied.
5) Perform same steps 1)-4) for port (2).

INSTALLATION

1) Install new master cylinder gasket to booster.
2) Install master cylinder to booster and tighten master cylinder fixing nuts (3) to specified torque.

Tightening torque
Master cylinder fixing nuts (a) : 13 N·m (1.3 kg-m, 9.5 lb-ft)

3) Connect brake pipe to master cylinder and tighten flare nut (2) to specified torque.

Tightening torque
Brake pipe flare nuts (b) : 16 N·m (1.6 kg-m, 11.5 lb-ft)

4) Connect fluid level switch connector (1) of reservoir.
5) Fill reservoir with specified brake fluid up to its MAX mark.
6) After completing above work, bleed air and check brake pedal for play.

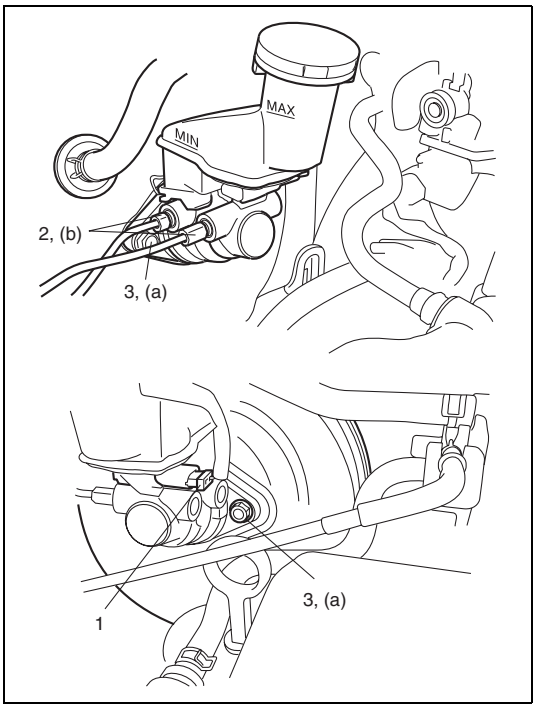

BRAKE BOOSTER

CAUTION:
Never disassemble brake booster. Disassembly will spoil its original function. If faulty condition is found, replace it with new one.

REMOVAL

1) Remove master cylinder assembly from booster. Refer to "MASTER CYLINDER".
2) Disconnect vacuum hose from booster.

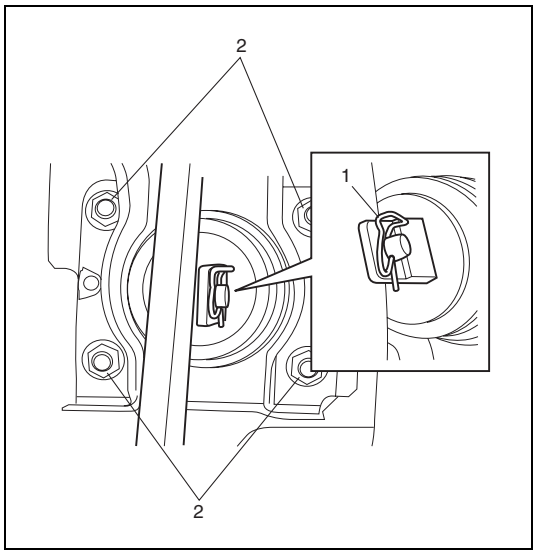

3) Remove push rod clevis pin (1).
4) Remove wiper motor. (For right-hand steering vehicle only)
5) Remove booster mounting nuts (2) and then booster.

INSTALLATION

NOTE:

- **Adjust clearance between booster piston rod and master cylinder piston. (Refer to "INSPECTION AND ADJUSTEMENT" of "BRAKE BOOSTER".)**
- **Check length of push rod clevis.**

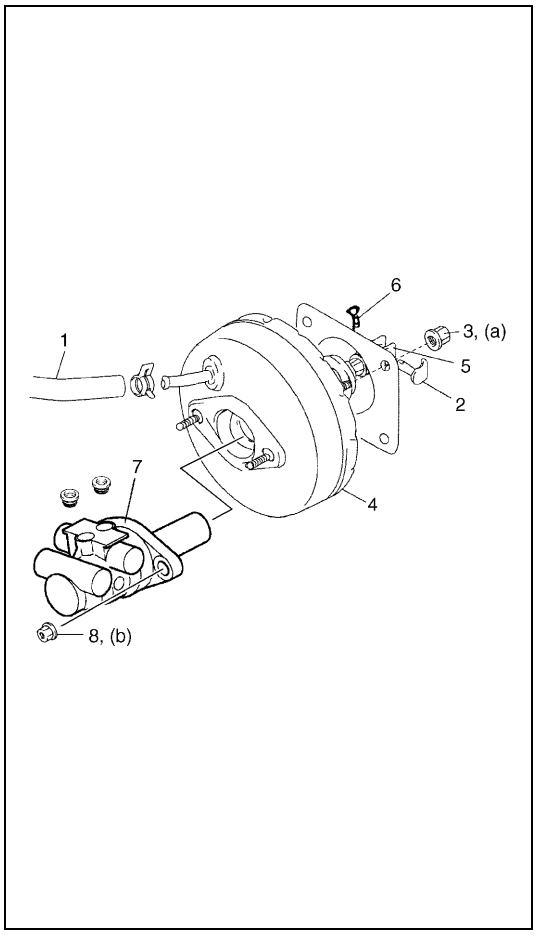

1) Install booster (4) to dash panel. Then connect push rod clevis (5) to pedal arm with clevis pin (2) and clip (6).
2) Tighten booster mounting nuts (3) to specified torque.

Tightening torque
Booster mounting nuts (a) : 13 N·m (1.3 kg-m, 9.5 lb-ft)

3) Install new master cylinder gasket to booster.
4) Install master cylinder (7) to booster and tighten mounting nuts (8) to specified torque.

Tightening torque
Master cylinder mounting nuts (b) :
13 N·m (1.3 kg-m, 9.5 lb-ft)

5) Connect brake pipes and tighten flare nuts to specified torque.

Tightening torque
Brake pipe flare nuts : 16 N·m (1.6 kg-m, 11.5 lb-ft)

6) Connect reservoir lead wire connector and booster vacuum hose (1).
7) Fill reservoir with specified fluid.
8) Bleed air from brake system.
9) Perform brake test and check each installed part for fluid leakage.

INSPECTION AND ADJUSTMENT

Installation Position Of Push Rod

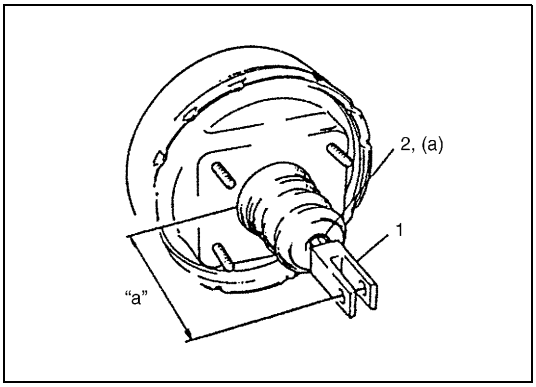

If push rod clevis (1) has been removed, adjust distance between booster installation surface (without including packing) and the center of clevis pin hole to standard value "a" and tighten nut (2) to specified torque.

Distance "a" between center of booster clevis pin hole and booster surface
Standard : 97 - 98 mm (3.82 - 3.86 in.)

Tightening torque
Clevis pin lock nut (a) : 19 N·m (1.9 kg-m, 14.0 lb-ft)

Clearance Between Booster Piston Rod And Master Cylinder Piston

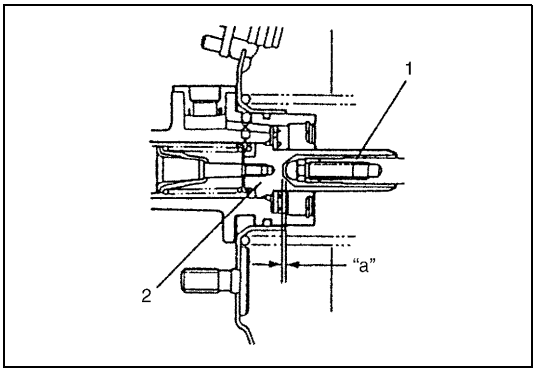

The length of booster piston rod (1) is adjusted to provide specified clearance "a" between piston rod (1) end and master cylinder piston (2).

- Before measuring clearance, push piston rod several times so as to make sure reaction disc is in place.
- Keep inside of booster at atmospheric pressure for measurement.

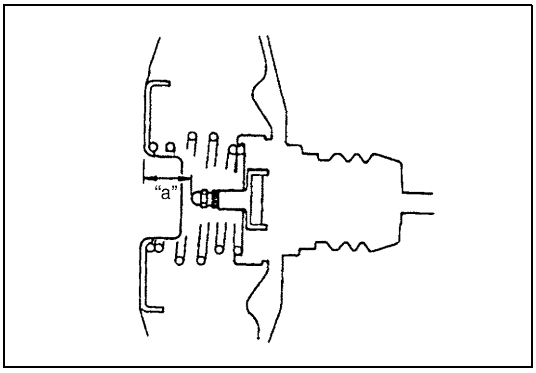

Measure length "a" of piston rod, i.e. distance between piston rod and mating surface of booster-to-master cylinder.

Length "a" of piston rod
: 30.3 - 30.5 mm (1.193 - 1.200 in.)

NOTE:

Remove gasket from booster, if equipped.

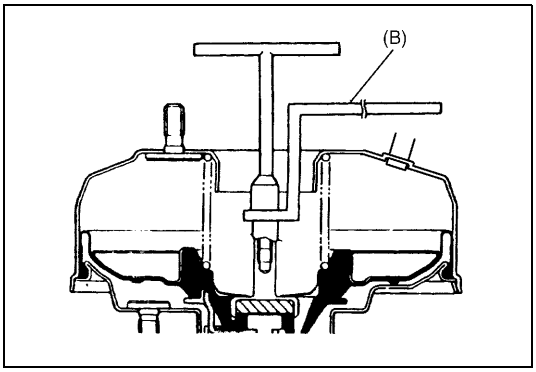

If measurement is out of specification, adjust piston rod by turning adjusting screw of piston rod.

Special tool
(B) : 09952-16020

BRAKE HOSE/PIPE

FRONT BRAKE HOSE/PIPE

REMOVAL

1) Raise and support vehicle properly. Remove tire and wheel.

NOTE:

This operation is not necessary when removing pipes connecting master cylinder.

2) Clean dirt and foreign material from both flexible hose end and pipe end fittings.
3) Remove brake flexible hose or pipe.

INSTALLATION

Reverse brake flexible hose installation procedure, noting the followings.

- Make sure that steering wheel is in straight-forward position and flexible hose has not twist or kink.
- Check to make sure that flexible hose doesn't contact any part of suspension, both in extreme right and extreme left turn conditions. If it does at any point, remove and correct. Fill and maintain brake fluid level in reservoir.
- Bleed brake system. Refer to "AIR BLEEDING OF BRAKE SYSTEM".
- Perform brake test and check installed part for fluid leakage.

For vehicle with ABS

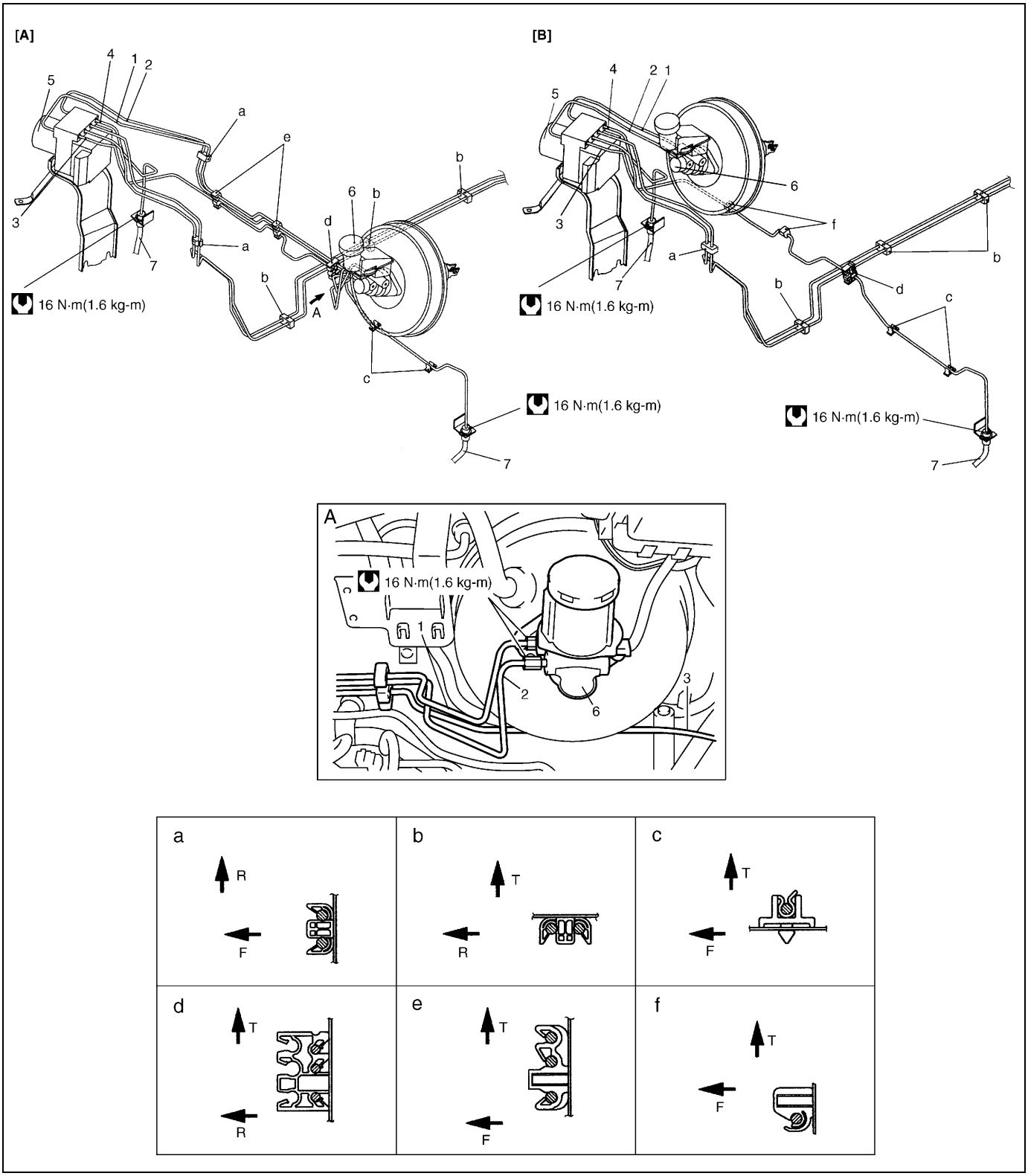

T : Top side	[A] : For left-hand steering vehicle	4. From ABS hydraulic unit to right front brake
F : Front side	[B] : For right-hand steering vehicle	5. ABS hydraulic unit
R : Right side	1. From master cylinder primary to ABS hydraulic unit	6. Master cylinder
A : View A	2. From master cylinder secondary to ABS hydraulic unit	7. Front brake hose
a-f: Clamp	3. From ABS hydraulic unit to left front brake	Tightening torque

For vehicle without ABS

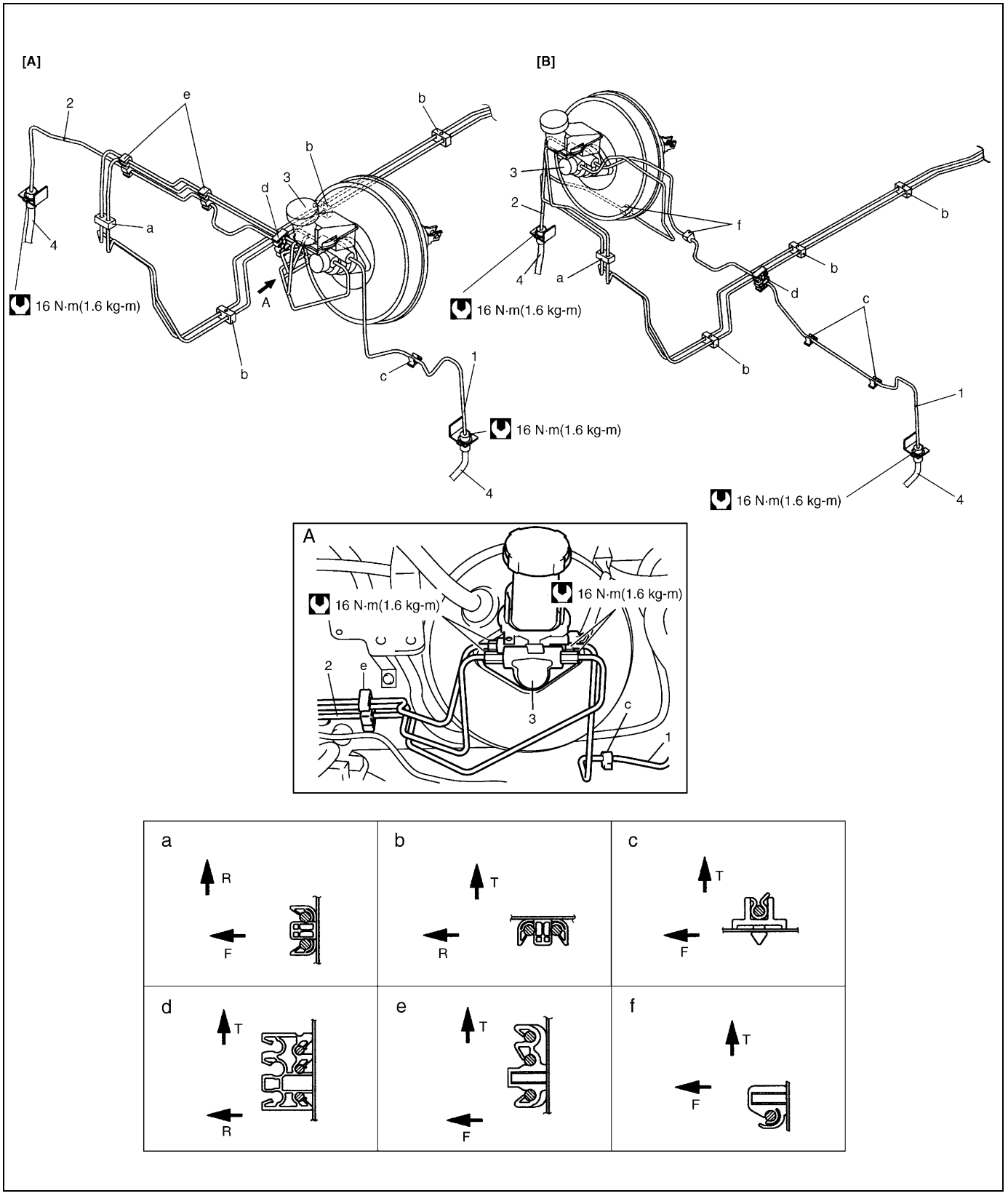

T : Top side	1. From master cylinder primary to left front brake	[A] : For left-hand steering vehicle
F : Front side	2. From master cylinder secondary to right front brake	[B] : For right-hand steering vehicle
R : Right side	3. Master cylinder	a-g: Clamp
A : View A	4. Front brake hose	Tightening torque

REAR BRAKE HOSE/PIPE

REMOVAL

1) Raise and support vehicle properly. Remove tire and wheel.
2) Clean dirt and foreign material from both flexible hose end and pipe end fittings.
3) Remove brake flexible hose or pipe.

INSTALLATION

Reverse brake flexible hose installation procedure, nothing the followings.

- Fill and maintain brake fluid level in reservoir.
- Bleed brake system. Refer to “AIR BLEEDING OF BRAKE SYSTEM”.
- Perform brake test and check each installed part for fluid leakage.
- Never reuse protector nut once removed. Be sure to use a new one.
- Install clamps properly referring to figure below and tighten bolts.
- When installing hose, make sure that it has no twist or kink.

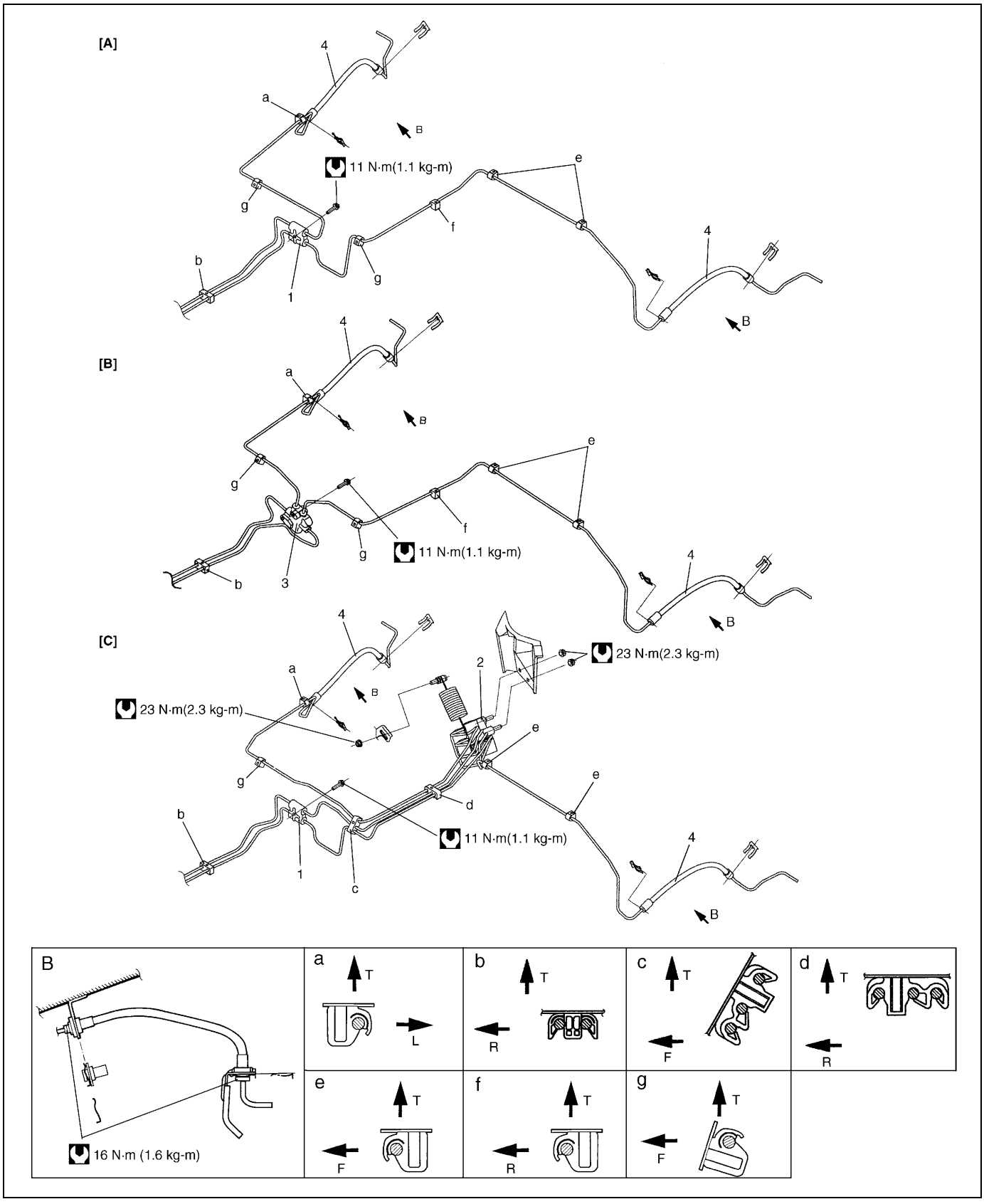

T : Top side	1. 4 way joint	[A] : with ABS
F : Front side	2. LSPV assembly	[B] : without ABS
R : Right side	3. P valve	[C] : with LSPV
L : Left side	4. Rear brake hose	Tightening torque
B : View B	a-g: Clamp	

PARKING BRAKE CABLE

REMOVAL

1) Raise, suitably support vehicle and remove wheel.
2) Remove parking brake cable.

INSTALLATION

Install it by reversing removal procedure, noting the following points.

- Install clamps properly referring to figure below.
- Tighten bolts and nuts to specified torque.
- Adjust parking brake cable. (Refer to “PARKING BRAKE INSPECTION AND ADJUSTMENT”.)
- Check brake drum for dragging and brake system for proper performance. After removing vehicle from hoist, brake test should be performed.

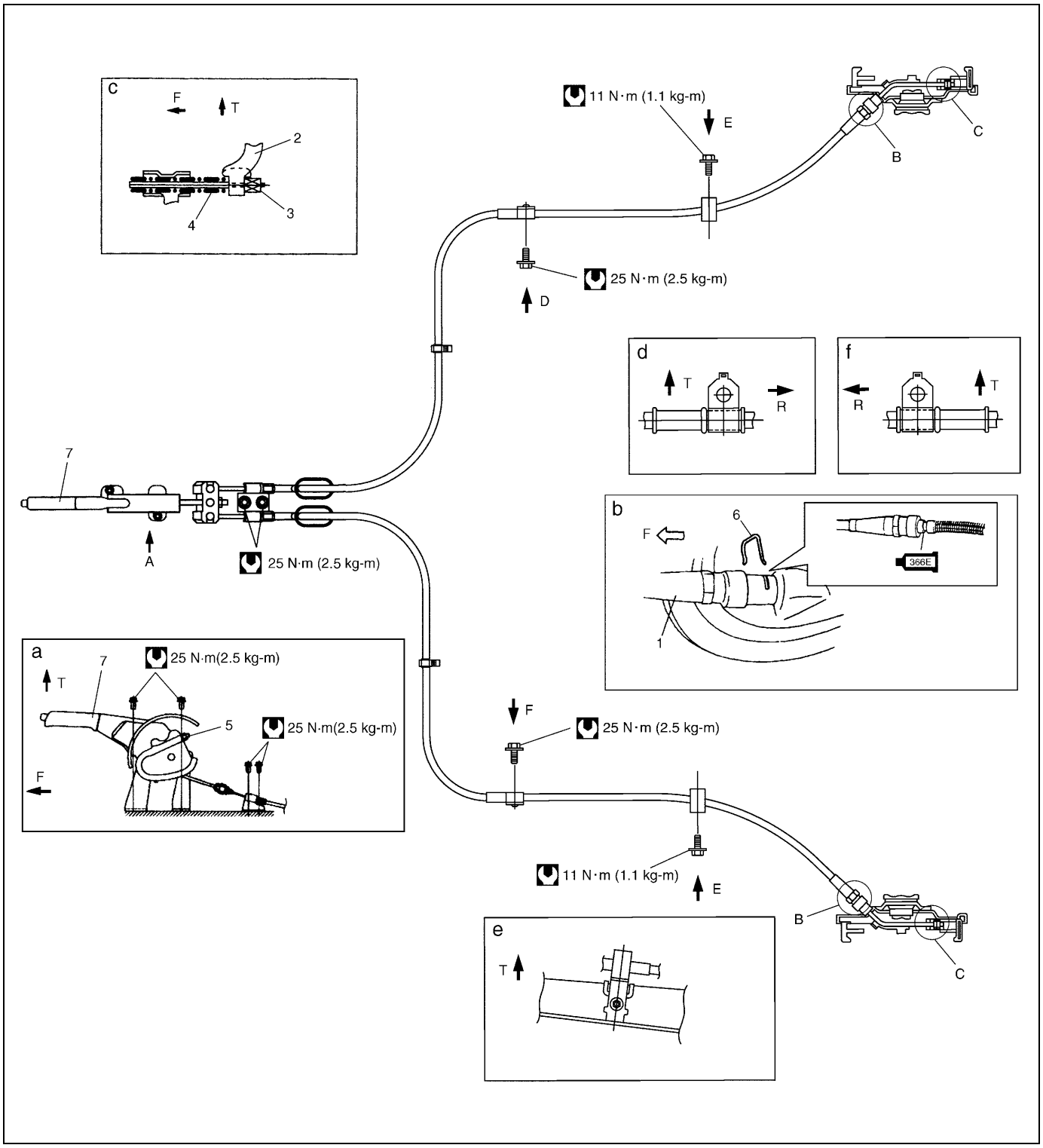

T : Top side	3. Inner cable end	a : View A	f : View F
F : Front side	4. Spring	b : View B	Tightening torque
R : Rear side	5. Adjusting nut	c : View C	
1. Cable : Apply water tight sealant (99000-31090)	6. Clip	d : View D	
2. Parking brake shoe lever	7. Parking brake lever	e : View E	

LSPV (LOAD SENSING PROPORTIONING VALVE) ASSEMBLY (IF EQUIPPED)

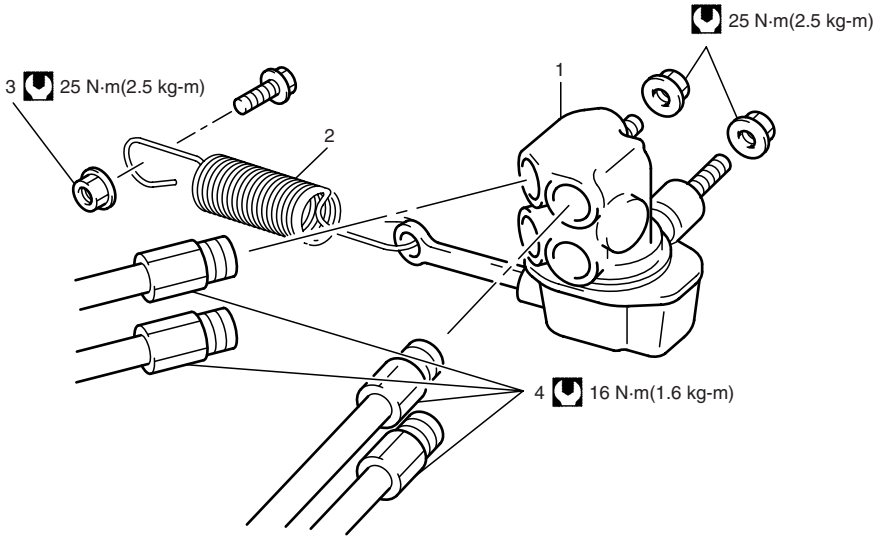

1. LSPV assembly	3. Adjust nut	Tightening torque
2. Spring	4. Brake pipe	

CAUTION:
Never disassemble LSPV assembly. Disassembly will spoil its original performance. Replace with new one if detective.

REMOVAL

1) Clean around reservoir cap and take out fluid with syringe or such.
2) Hoist vehicle.
3) Disconnect brake pipes from LSPV assembly.

Special tool
09950-78230 (10 x 11 mm)

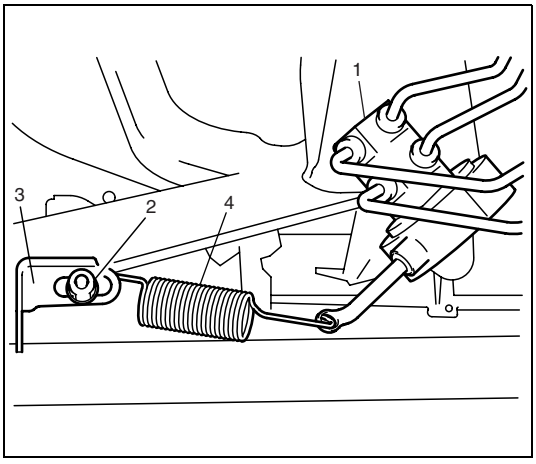

4) Remove nut (2) and detach spring end from rear axle (3).
5) Remove LSPV assembly (1) with spring (4) from vehicle body.

INSTALLATION

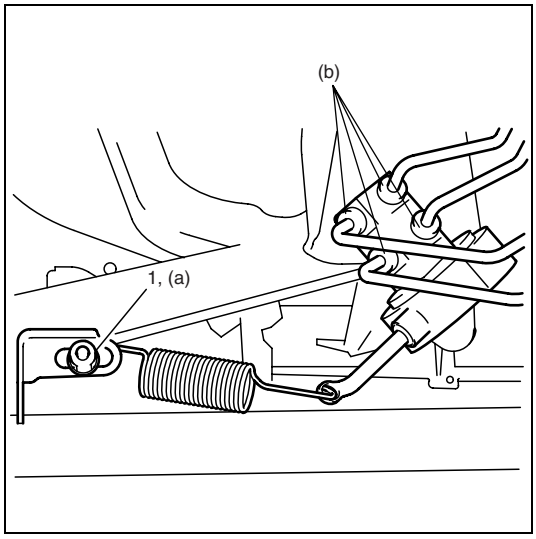

1) Install LSPV assembly with spring to vehicle body.
2) Torque each bolt and nut (1) to specification as indicated respectively in figure.

Special tool
(A) : 09950-78230 (10 x 11 mm)

Tightening torque
LSPV adjust nut (a) : 25 N·m (2.5 kg-m, 18.0 lb-ft)
Brake pipe flare nuts (b) : 16 N·m (1.6 kg-m, 11.5 lb-ft)

3) Fill reservoir with specified fluid and bleed air from brake system.
4) After bleeding air, check that LSPV is installed properly referring to following “INSPECTION & ADJUSTMENT”.

INSPECTION AND ADJUSTMENT

1) Confirm the following before inspection and adjustment.
- Fuel tank is filled with fuel fully.
- Vehicle is equipped with spare tire, tools, jack and jack handle.
- Vehicle is free from any other load.
- Vehicle is placed on level floor.

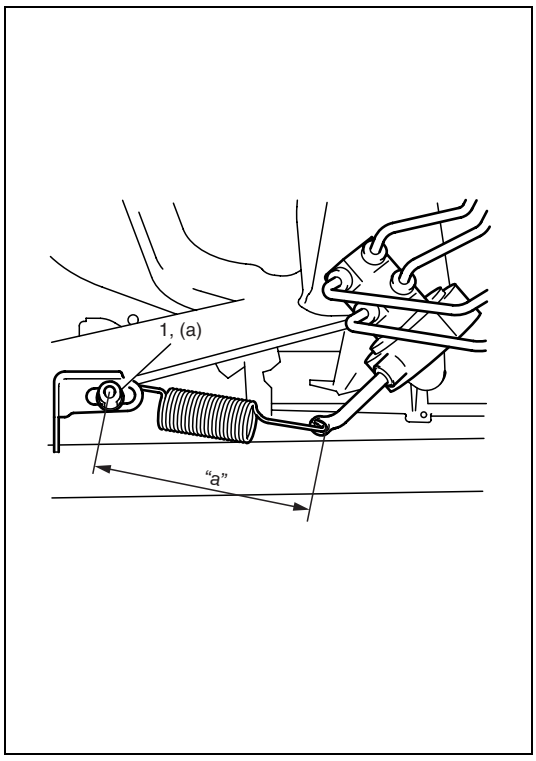

2) Push up LSPV lever with finger till it stops and measure length of coil spring (“a” in figure).
3) Spring length “a” should be as specified.

Spring length “a”
2WD : 144 mm (5.67 in.)
4WD : 148 mm (5.83 in.)

4) If it isn’t, adjust it to specification by changing spring position as shown in figure. After adjustment, tighten nut (1) to specified torque.

Tightening torque
LSPV adjust nut (a) : 25 N·m (2.5 kg-m, 18.0 lb-ft)

NOTE:

Check to make sure that LSPV body and brake pipe joints are free from fluid leakage. Replace defective parts, if any.

5) Confirm fluid pressure referring to “Fluid Pressure Test”.

REQUIRED SERVICE MATERIAL

Material	Recommended SUZUKI product (Part Number)	Use
Brake fluid	DOT 3 or SAE J1703	• To fill master cylinder reservoir. • To clean and apply to inner parts of master cylinder caliper and wheel cylinder when they are disassembled.
Water tight sealant	SEALING COMPOUND 366E (99000-31090)	• To apply to mating surfaces of brake back plate and rear axle (2WD vehicle) or rear axle housing (4WD vehicle). • To apply to mating surfaces of brake back plate and parking brake cable.
Lithium grease	SUZUKI SUPER GREASE A (99000-25010)	• To apply to slide pin of brake caliper carrier.

SPECIAL TOOL

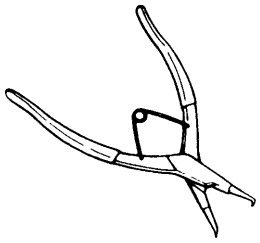 09900-06106 Snap ring remover	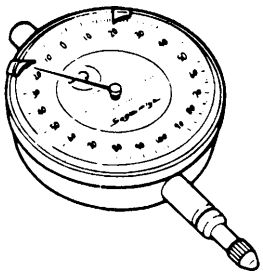 09900-20606 Dial gauge	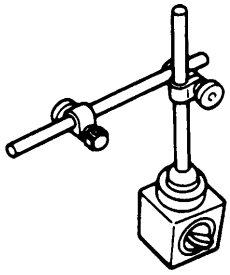 09900-20701 Dial gauge chuck	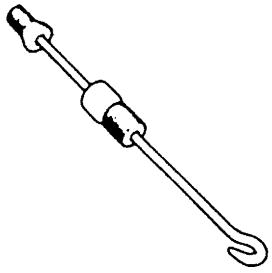 09942-15510 Sliding hammer
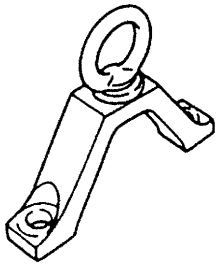 09943-17912 Brake drum remover (Front wheel hub remover)	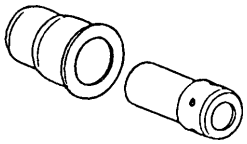 09951-18220 Secondary cup installer set	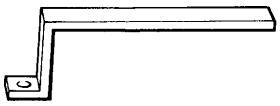 09952-16020 Booster piston rod adjuster	 09952-46010 Master cylinder attachment

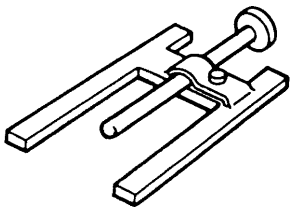 09950-96010 Booster piston rod gauge	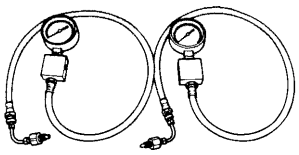 09956-02310 Fluid pressure gauge	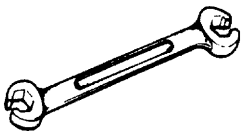 09950-78230 Flare nut wrench (10 x 11 mm)	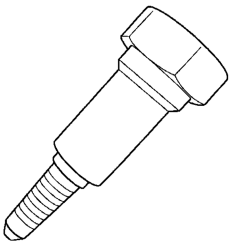 09952-48320 Pressure gauge attachment
 09952-26020 Master cylinder plug			

SECTION 5E

ANTILOCK BRAKE SYSTEM (ABS)

WARNING:

For vehicles equipped with Supplemental Restraint (Air Bag) System :

- **Service on and around the air bag system components or wiring must be performed only by an authorized SUZUKI dealer. Refer to "Air Bag System Components and Wiring Location View" under "General Description" in air bag system section in order to confirm whether you are performing service on or near the air bag system components or wiring. Please observe all WARNINGS and "Service Precautions" under "On-Vehicle Service" in air bag system section before performing service on or around the air bag system components or wiring. Failure to follow WARNINGS could result in unintentional activation of the system or could render the system inoperative. Either of these two conditions may result in severe injury.**
- **Technical service work must be started at least 90 seconds after the ignition switch is turned to the "LOCK" position and the negative cable is disconnected from the battery. Otherwise, the system may be activated by reserve energy in the Sensing and Diagnostic Module (SDM).**

NOTE:

All brake fasteners are important attaching parts in that they could affect the performance of vital parts and systems, and/or could result in major repair expense. They must be replaced with one of same part number or with an equivalent part if replacement becomes necessary. Do not use a replacement part of lesser quality or substitute design. Torque values must be used as specified during reassembly to assure proper retention of all parts. There is to be no welding as it may result in extensive damage and weakening of the metal.

CONTENTS

GENERAL DESCRIPTION 5E-2
COMPONENTS/PARTS LOCATION AND BRAKE HOSE/PIPE ROUTING 5E-2
SYSTEM SCHEMATIC 5E-4
ABS HYDRAULIC UNIT/CONTROL MODULE ASSEMBLY 5E-5
SELF-DIAGNOSIS FUNCTION..... 5E-5
FAIL-SAFE FUNCTION..... 5E-5
SYSTEM CIRCUIT 5E-6
DIAGNOSIS 5E-8
PRECAUTION IN DIAGNOSING TROUBLES 5E-8
ABS DIAGNOSTIC FLOW TABLE 5E-9
ABS WARNING LAMP CHECK 5E-12
EBD WARNING LAMP (BRAKE WARNING LAMP) CHECK 5E-12
TABLE – A ABS WARNING LAMP CIRCUIT CHECK – LAMP DOES NOT COME "ON" AT IGNITION SWITCH ON.... 5E-13
TABLE – B ABS WARNING LAMP CIRCUIT CHECK – LAMP COMES "ON" STEADY 5E-14
TABLE – C ABS WARNING LAMP CIRCUIT CHECK – THE LAMP FLASHES CONTINUOUSLY WHILE IGNITION SWITCH IS ON 5E-15
TABLE – D CODE (DTC) IS NOT OUTPUTTED EVEN WITH DIAGNOSIS SWITCH TERMINAL CONNECTED TO GROUND 5E-16
TABLE – E EBD WARNING LAMP (BRAKE WARNING LAMP) CHECK – LAMP COMES "ON" STEADY..... 5E-17
DIAGNOSTIC TROUBLE CODE (DTC) CHECK (USING ABS WARNING LAMP) 5E-18
DIAGNOSTIC TROUBLE CODE (DTC) CHECK (USING SUZUKI SCAN TOOL).... 5E-19
DIAGNOSTIC TROUBLE CODE (DTC) CLEARANCE 5E-19
DIAGNOSTIC TROUBLE CODE (DTC) TABLE..... 5E-20
DTC C1013 (DTC 13) – SYSTEM SPECIFICATIONS DIFFERENT FROM ABS CONTROL MODULE SPECIFICATIONS .. 5E-22

DTC C1015 (DTC 15) – G SENSOR CIRCUIT 5E-22
DTC C1021 (DTC 21), DTC C1022 (DTC 22) – RIGHT-FRONT WHEEL SPEED SENSOR CIRCUIT OR SENSOR RING 5E-24
DTC C1025 (DTC 25), DTC C1026 (DTC 26) – LEFT-FRONT WHEEL SPEED SENSOR CIRCUIT OR SENSOR RING 5E-24
DTC C1031 (DTC 31), DTC C1032 (DTC 32) – RIGHT-REAR WHEEL SPEED SENSOR CIRCUIT OR SENSOR RING 5E-24
DTC C1035 (DTC 35), DTC C1036 (DTC 36) – LEFT-REAR WHEEL SPEED SENSOR CIRCUIT OR SENSOR RING.... 5E-24
DTC C1041 (DTC 41) – RIGHT-FRONT INLET SOLENOID CIRCUIT..... 5E-26
DTC C1045 (DTC 45) – LEFT-FRONT INLET SOLENOID CIRCUIT..... 5E-26
DTC C1051 (DTC 51) – RIGHT-REAR INLET SOLENOID CIRCUIT..... 5E-26
DTC C1055 (DTC 55) – LEFT-REAR INLET SOLENOID CIRCUIT..... 5E-26
DTC C1042 (DTC 42) – RIGHT-FRONT OUTLET SOLENOID CIRCUIT..... 5E-26
DTC C1046 (DTC 46) – LEFT-FRONT OUTLET SOLENOID CIRCUIT..... 5E-26
DTC C1052 (DTC 52) – RIGHT-REAR OUTLET SOLENOID CIRCUIT..... 5E-26
DTC C1056 (DTC 56) – LEFT-REAR OUTLET SOLENOID CIRCUIT 5E-26
DTC C1057 (DTC 57) – POWER SOURCE CIRCUIT..... 5E-27
DTC C1061 (DTC 61) – ABS PUMP MOTOR CIRCUIT..... 5E-28
DTC C1063 (DTC 63) – ABS FAIL-SAFE RELAY CIRCUIT 5E-29
DTC C1071 (DTC 71) – ABS CONTROL MODULE 5E-30
ON-VEHICLE SERVICE..... 5E-31
PRECAUTIONS..... 5E-31
ABS HYDRAULIC UNIT OPERATION CHECK (USING SUZUKI SCAN TOOL) ... 5E-31
ABS HYDRAULIC UNIT OPERATION CHECK (NOT USING SUZUKI SCAN TOOL)..... 5E-31
ABS HYDRAULIC UNIT/CONTROL MODULE ASSEMBLY 5E-33
FRONT WHEEL SPEED SENSOR 5E-35
FRONT WHEEL SPEED SENSOR RING..... 5E-37
REAR WHEEL SPEED SENSOR..... 5E-38
REAR WHEEL SPEED SENSOR RING (FOR 2WD VEHICLE) 5E-41
REAR WHEEL SPEED SENSOR RING(FOR 4WD VEHICLE) 5E-42
G SENSOR (FOR 4WD VEHICLE ONLY)..... 5E-43
SPECIAL TOOL 5E-44

GENERAL DESCRIPTION

COMPONENTS/PARTS LOCATION AND BRAKE HOSE/PIPE ROUTING

The ABS (Antilock Brake System) controls the fluid pressure applied to the Wheel cylinder of each brake from the master cylinder so that each wheel is not locked even when hard braking is applied.
This ABS has also the following function.
While braking is applied, but before ABS control becomes effective, braking force is distributed between the front and rear so as to prevent the rear wheels from being locked too early for better stability of the vehicle.

The main component parts of this ABS include the following parts in addition to those of the conventional brake system.

- Wheel speed sensor which senses revolution speed of each wheel and outputs its signal.
- ABS warning lamp which lights to inform abnormality when system fails to operate properly.
- ABS hydraulic unit/control module assembly is incorporated ABS control module, ABS hydraulic unit (actuator assembly), fail-safe relay and pump motor relay.
  - ABS control module which sends operation signal to ABS hydraulic unit to control fluid pressure applied to each wheel cylinder based on signal from each wheel speed sensor so as to prevent wheel from locking.
  - ABS hydraulic unit which operates according to signal from ABS control module to control fluid pressure applied to wheel cylinder of each 4 wheels.
  - Fail-safe relay (solenoid valve) relay which supplies power to solenoid valve in ABS hydraulic unit and pump motor relay.
  - Pump motor relay which supplies power to pump motor in ABS hydraulic unit.
- G sensor which detects body deceleration speed. (For 4WD model only)]

This ABS is equipped with Electronic Brake force Distribution (EBD) system that controls a fluid pressure of rear wheels to best condition, which is the same function as that of proportioning valve, by the signal from wheel sensor independently of change of load due to load capacity and so on. And if the EBD system fails to operate properly, the brake warning lamp lights to inform abnormality.

[A]

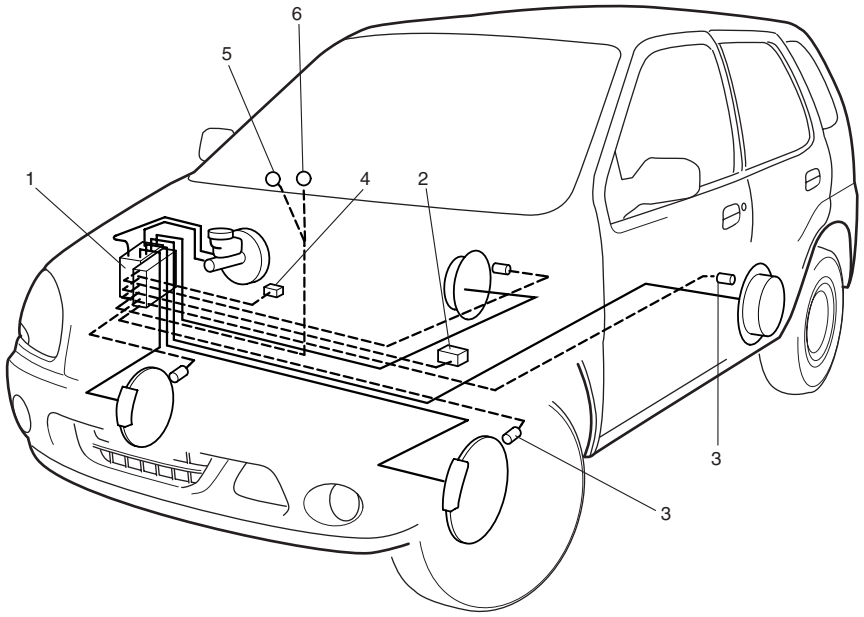

[A] : RH steering vehicle shown	4. Stop lamp switch
1. ABS hydraulic unit/control module assembly	5. ABS warning lamp
2. G sensor (For 4WD vehicle only)	6. EBD warning lamp (Brake warning lamp)
3. Wheel speed sensors	

NOTE:

As for the difference of RH steering vehicle and LH steering vehicle, the location of the combination meter and the brake master cylinder assembly only changes.

SYSTEM SCHEMATIC

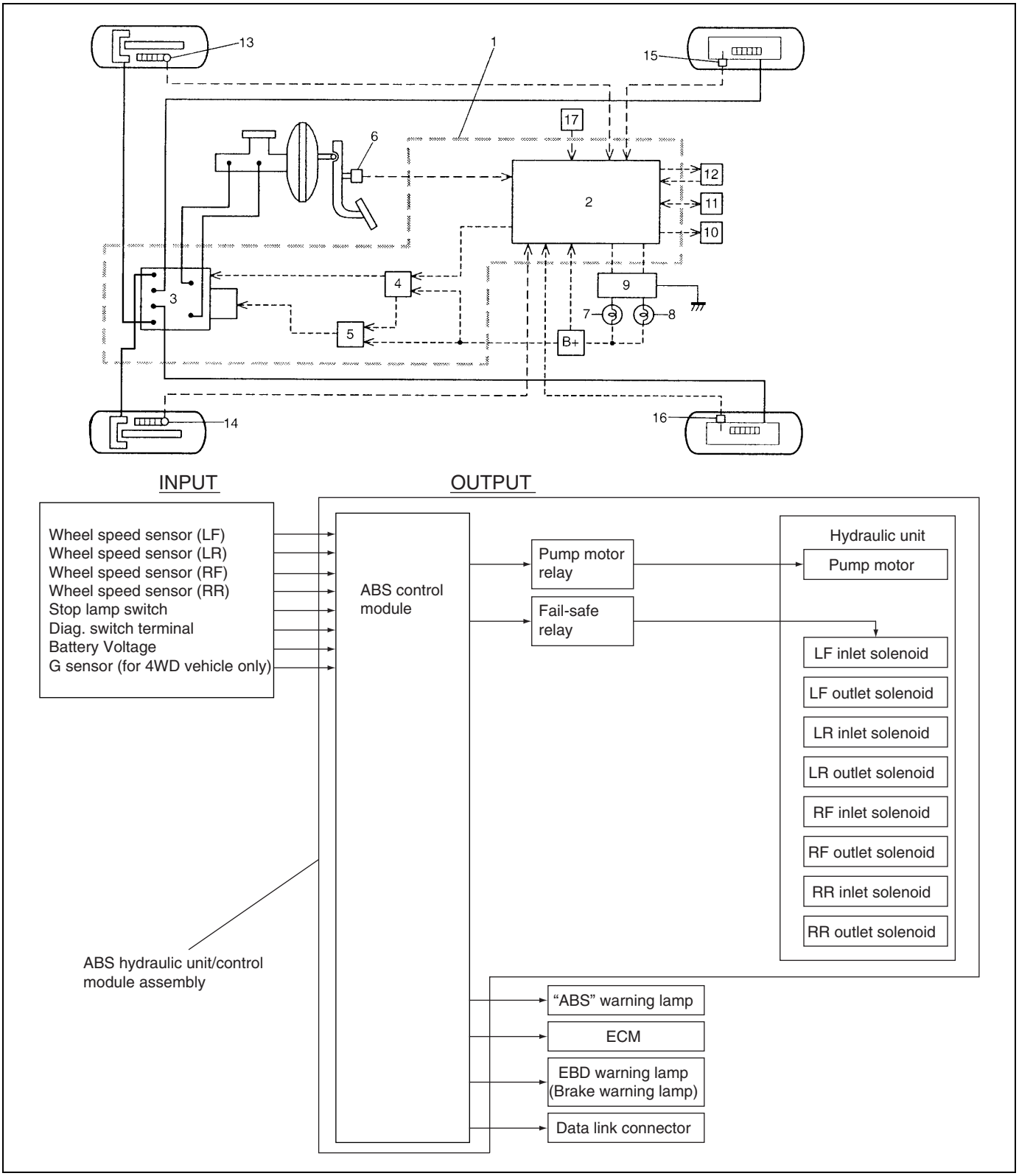

1. ABS hydraulic unit/control module assembly	7. "ABS" warning lamp	13. Wheel speed sensor (Right-front)
2. ABS control module	8. "EBD" warning lamp (Brake warning lamp)	14. Wheel speed sensor (Left-front)
3. ABS hydraulic unit	9. Lamp driver module	15. Wheel speed sensor (Right-rear)
4. Fail safe relay	10. ECM	16. Wheel speed sensor (Left-rear)
5. Pump motor relay	11. Data link connector	17. G sensor (For 4WD vehicle only)
6. Stop lamp switch	12. Monitor coupler	

ABS HYDRAULIC UNIT/CONTROL MODULE ASSEMBLY

ABS control module is a component of ABS hydraulic unit/control module assembly and has the following functions.

SELF-DIAGNOSIS FUNCTION

ABS control module diagnoses conditions of the system component parts (whether or not there is any abnormality) all the time and indicates the results (warning of abnormality occurrence and DTC) through the ABS warning lamp as described below.

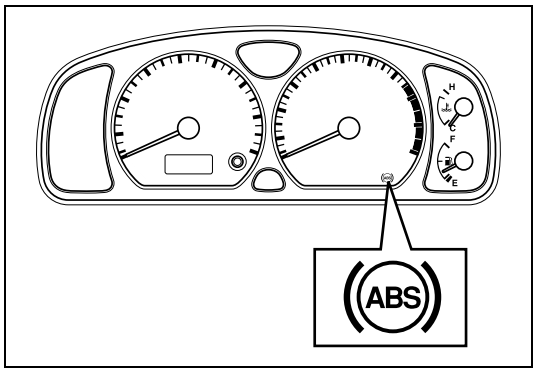

1) When ignition switch is turned ON, ABS warning lamp lights for 2 seconds to check its bulb and circuit.
2) When no abnormality has been detected (the system is in good condition), ABS warning lamp turns OFF after 2 seconds.
3) When an abnormality in the system is detected, ABS warning lamp lights and the area where that abnormality lies is stored in the memory of EEPROM in ABS control module.

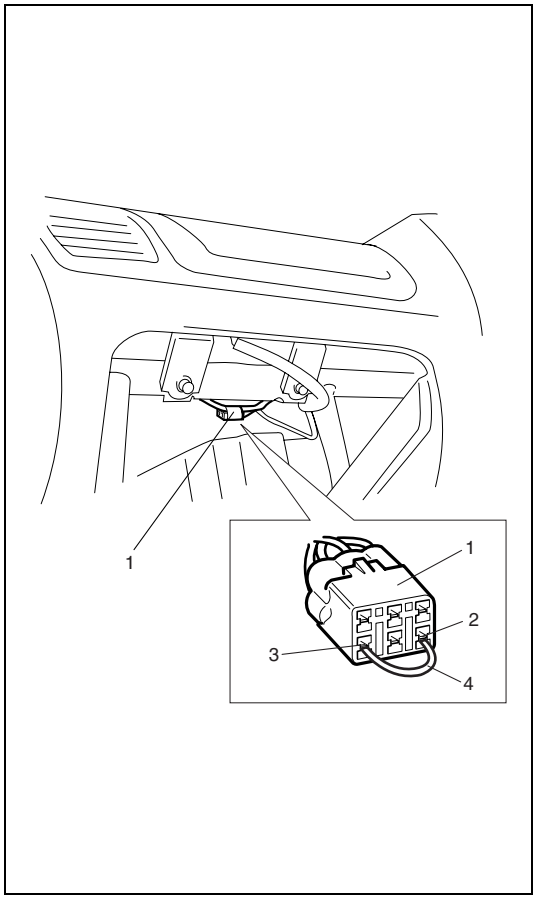

4) When Diag. switch terminal (2) of diagnosis connector (1) (monitor connector) is grounded, the abnormal area is output as DTC. It is indicated by flashing of ABS warning lamp. (Refer to the table below.)

SYSTEM CONDITION		ABS WARNING LAMP	
		Diag. switch terminal is not grounded	Diag. switch terminal is grounded
In good condition at present	No trouble in the past	OFF	DTC 12
	Trouble occurred in the past	OFF	History DTC
Abnormality exists at present	No trouble in the past	ON	Current DTC
	Trouble occurred in the past	ON	Current and history DTCs

5) For procedure to clear all DTC's, refer to "DIAGNOSTIC TROUBLE CODE CLEARANCE" in this section.

3.	Ground terminal
4.	Service wire

Also ABS control module turns ON EBD warning lamp (brake warning lamp) depending on the trouble that detected by the module and EBD warning lamp does not indicate DTC as well as ABS warning lamp.

FAIL-SAFE FUNCTION

When an abnormality occurs (an abnormal DTC is detected), ABS control module turns OFF the fail-safe relay which supplies power to ABS hydraulic unit. Thus, with ABS not operating, brakes function just like the brake system of the vehicle without ABS.

SYSTEM CIRCUIT

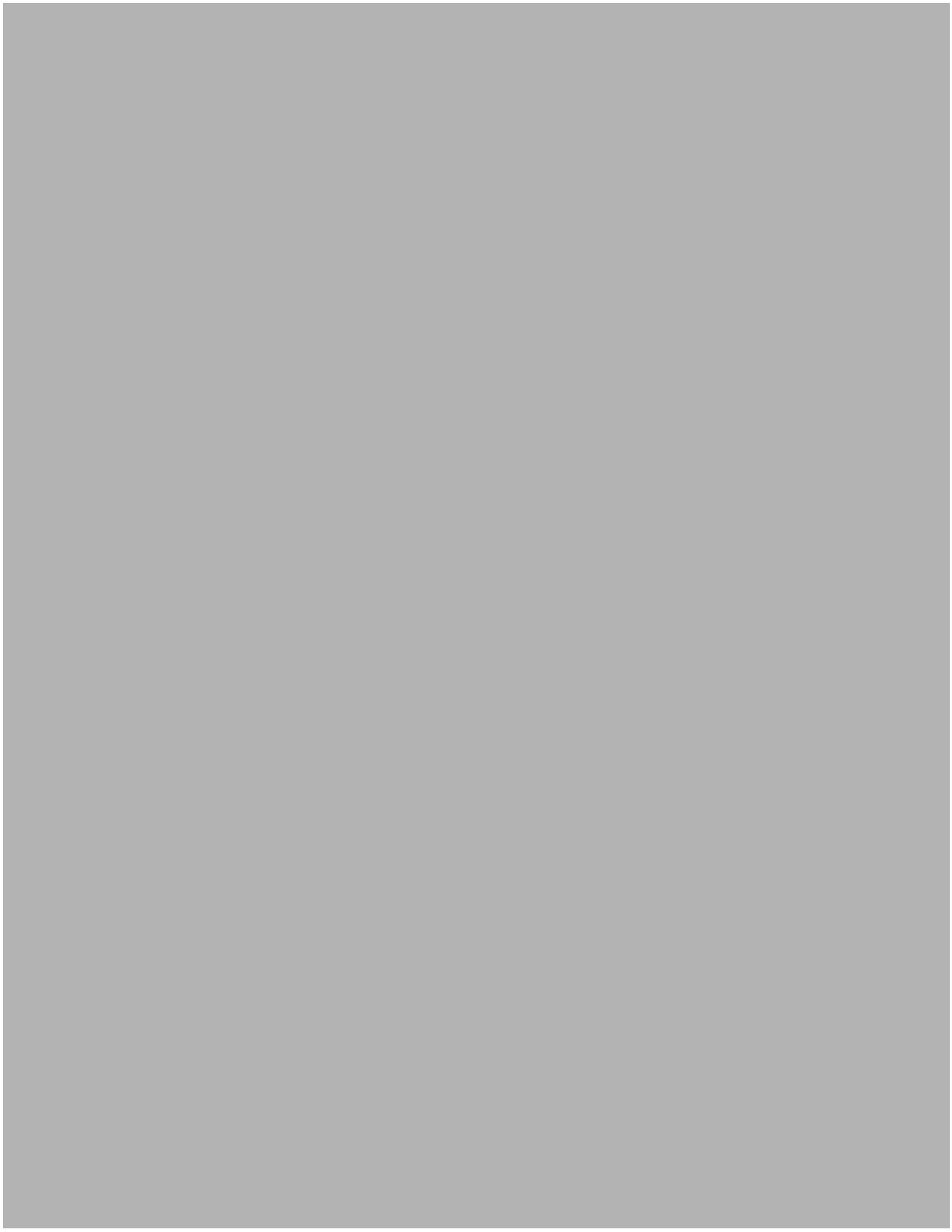

1. Battery	9. ABS hydraulic unit/control module assembly	17. Left-rear wheel speed sensor
2. Main fuses	10. Terminal arrangement of connector E19 for ABS hydraulic unit/control module assembly	18. Right-front wheel speed sensor
3. Ignition switch	11. ABS fail-safe relay (Solenoid valve relay)	19. Left-front wheel speed sensor
4. Circuit fuses	12. ABS pump motor relay	20. Data link connector
5. Combination meter	13. Pump motor	21. To ECM, SDM and EPS controller (if equipped)
6. ABS warning lamp	14. Solenoid valves	22. Stop lamp
7. Brake warning lamp (“EBD” warning lamp)	15. Diagnosis monitor coupler	23. Stop lamp switch
8. Warning lamp driver module (for ABS)	16. Right-rear wheel speed sensor	24. G sensor (For 4WD vehicle only)

Wire color					
BLK :	Black	LT GRN/BLK :	Light Green/Black	RED/BLU :	Red/Blue
BLK/ORN :	Black/Orange	LT GRN/RED :	Light Green/Red	WHT :	White
BLK/YEL :	Black/Yellow	ORN :	Orange	WHT/BLK :	White/Black
BLU :	Blue	PNK :	Pink	WHT/BLU :	White/Blue
BRN :	Brown	PNK/BLU	Pink/Blue	WHT/RED :	White/Red
GRN :	Green	RED :	Red	YEL :	Yellow
GRN/ORN :	Green/Orange	RED/BLK :	Red/Black		

TERMINAL		CIRCUIT
E19	1	–
	2	Stop lamp switch
	3	Right-front wheel speed sensor (+)
	4	Right-front wheel speed sensor (–)
	5	–
	6	Right-rear wheel speed sensor (–)
	7	Right-rear wheel speed sensor (+)
	8	–
	9	–
	10	Brake warning lamp (EBD warning lamp)
	11	G sensor (For 4WD vehicle only)
	12	Diagnosis switch terminal
	13	Ground (For G sensor) (For 4WD vehicle only)
	14	ABS warning lamp
	15	Left-front wheel speed sensor (+)
	16	Left-front wheel speed sensor (–)
	17	–
	18	Ignition switch
	19	Left-rear wheel speed sensor (+)
	20	Left-rear wheel speed sensor (–)
	21	Data link connector
	22	Ground (for ABS pump motor)
	23	ABS pump motor relay
	24	Ground (for ABS control module)
	25	ABS fail-safe relay

DIAGNOSIS

To ensure that the trouble diagnosis is done accurately and smoothly, observe “PRECAUTIONS IN DIAGNOSING TROUBLES” and follow “ABS DIAGNOSTIC FLOW TABLE”.

PRECAUTION IN DIAGNOSING TROUBLES

- If the vehicles was operated in any of the following ways, ABS warning lamp may light momentarily but this does not indicate anything abnormal in ABS.
  – The vehicle was driven with parking brake pulled.
  – The vehicle was driven with brake dragging.
  – The vehicle was stuck in mud, sand, etc.
  – Wheel spin occurred while driving.
  – Wheel(s) was rotated while the vehicle was jacked up.
- Be sure to read “PRECAUTIONS FOR ELECTRONIC CIRCUIT SERVICE” in Section 0A before inspection and observe what is written there.
- Be sure to use the trouble diagnosis procedure as described in the flow table. Failure to follow the flow table may result in incorrect diagnosis. (Some other diagnosis trouble code may be stored by mistake in the memory of ABS control module during inspection.)

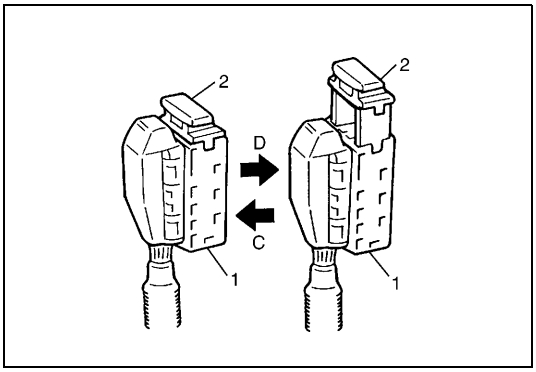

- When disconnecting ABS hydraulic unit/control module connector (1), pull up lock (2) of connector.
  When connecting, set the connector on ABS hydraulic unit/control module assembly and push the lock (2) down.

D :	Disconnect
C :	Connect

ABS DIAGNOSTIC FLOW TABLE

Refer to the following pages for the details of each step.

Step	Action	Yes	No
1	1) Perform “Customer Complaint Analysis”. 2) Perform “Problem Symptom Confirmation”. 3) Perform “Diagnostic Trouble Code Check, Record and Clearance”. Is there any malfunction DTC?	Go to Step 2.	Go to Step 5.
2	1) Perform “DRIVING TEST”. Is trouble symptom identified?	Go to Step 3.	Go to Step 6.
3	1) Check diagnostic trouble code. Is it malfunction code?	Go to Step 4.	Go to Step 5.
4	1) Inspect and repair referring to applicable diagnostic trouble code table in this section. 2) Perform “FINAL CONFIRMATION TEST” after cleared DTC. Does trouble recur?	Go to Step 7.	End.
5	1) Inspect and repair referring to “DIAGNOSIS” in “BRAKES” section. 2) Perform “FINAL CONFIRMATION TEST”.	–	–
6	1) Check intermittent troubles referring to “INTERMITTENT AND POOR CONNECTION” in “GENERAL INFORMATION” section and related circuit of trouble code recorded in Step 2. 2) Perform “FINAL CONFIRMATION TEST” after cleared diagnostic trouble code. Does trouble recur?	Go to Step 7.	End.
7	1) Perform “Diagnostic Trouble Code Check, Record and Clearance”. Is there any malfunction code?	Go to Step 2.	Go to Step 5.

1) MALFUNCTION ANALYSIS

a) Customer Complaint Analysis

Record details of the problem (failure, complaint) and how it occurred as described by the customer. For this purpose, use of such a questionnaire form as shown below will facilitate collecting information to the point required for proper analysis and diagnosis.

CUSTOMER QUESTIONNAIRE (EXAMPLE)

Customer's name:	Model:	VIN:	
Date of issue:	Date of Reg:	Date of problem:	Mileage:

Problem Symptoms	• ABS warning lamp abnormal: fails to turn on/fails to go off/flashes • Abnormal noise while vehicle is running: from motor, from valve, other_____ • Wheel is locked at braking: • Pump motor does not stop (running): • Braking does not work: • Other:
Frequency of occurrence	• Continuous/Intermittent (times a day, a month)/ other_____
Conditions for Occurrence of Problem	• Vehicle at stop & ignition switch ON: • When starting: at initial start only/at every start/Other_____ • Vehicle speed: while accelerating/while decelerating/at stop/ while turning/while running at constant speed/ other_____ • Road surface condition: Paved road/rough road/snow-covered road/ other_____ • Chain equipment:
Environmental Condition	• Weather: fair/cloudy/rain/snow/other_____ • Temperature: °F (°C)
Diagnostic Trouble Code	• First check: Normal code/malfunction code ( ) • Second check after test drive: Normal code/malfunction code ( )

b) Problem Symptom Confirmation

Check if what the customer claimed in "CUSTOMER QUESTIONNAIRE" is actually found in the vehicle and if that symptom is found, whether it is identified as a failure. (This step should be shared with the customer if possible.) Check warning lamps related to brake system referring to "EBD WARNING LAMP (BRAKE WARNING LAMP) CHECK" and "ABS WARNING LAMP CHECK" in this section.

c) Diagnostic Trouble Code (DTC) Check, Record and Clearance
Perform “DIAGNOSTIC TROUBLE CODE CHECK” procedure in this section, record it and then clear it referring to “DIAGNOSTIC TROUBLE CODE CLEARANCE” in this section.
If the malfunction DTC which was once displayed and then cleared cannot be detected (indicated) again when the ignition switch is turned ON, attempt to diagnose the trouble based on the DTC recorded in this step may mislead the diagnosis or make diagnosing difficult. Proceed to Step 2) to check control module for proper self-diagnosis function.
If the malfunction DTC which was once displayed and then cleared can be detected (indicated) again when ignition switch is turned ON, proceed to Step 3).

2) DRIVING TEST
Test drive the vehicle at 40 km/h for more than a minute and check if any trouble symptom (such as abnormal lighting of ABS warning light) exists.
If the malfunction DTC is confirmed again at ignition switch ON, driving test as described in above is not necessary. Proceed to Step 3).

3) DIAGNOSTIC TROUBLE CODE CHECK
Recheck diagnostic trouble code referring to “DTC CHECK” as shown in the following page.

4) DIAGNOSTIC TROUBLE CODE FLOW TABLE
According to Diagnostic flow table for the diagnostic trouble code confirmation in Step 3), locate the cause of the trouble, namely in a sensor, switch, wire harness, connector, actuator assembly or other part and repair or replace faulty parts.

5) “DIAGNOSIS” IN “BRAKES” SECTION
Check the parts or system suspected as a possible cause referring to “DIAGNOSIS” in “BRAKES” section and based on symptoms appearing on the vehicle (symptom obtained through Steps 1)-a, 1)-b and 2) and repair or replace faulty parts, if any).

6) CHECK FOR INTERMITTENT PROBLEM
Check parts where an intermittent trouble is easy to occur (e.g., wire harness, connector, etc.), referring to “INTERMITTENT TROUBLE” in “GENERAL INFORMATION” section and related circuit of trouble code recorded in Step 1)-c.

7) FINAL CONFIRMATION TEST
Confirm that the problem symptom has gone and the ABS is free from any abnormal conditions. If what has been repaired is related to the malfunction DTC, clear the DTC once and perform test driving and confirm that no DTC is indicated.

ABS WARNING LAMP CHECK

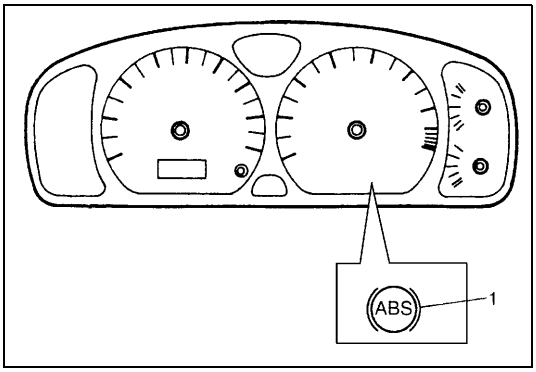

1) Turn ignition switch ON.
2) Check that ABS warning lamp (1) comes ON for about 2 seconds and then goes off.
   If any faulty condition is found, advance to Diagnostic Flow Table-A, B, C or D.

EBD WARNING LAMP (BRAKE WARNING LAMP) CHECK

NOTE:

Perform this check on a level place.

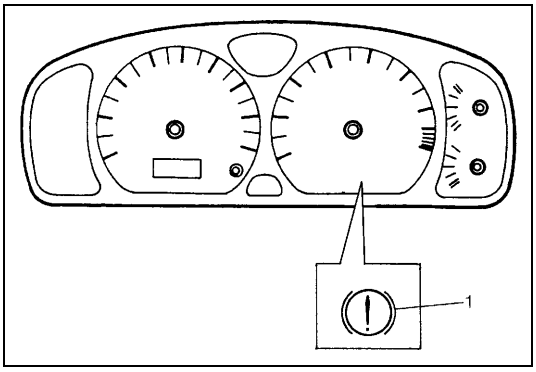

1) Turn ignition switch ON with parking brake applied.
2) Check that EBD warning lamp (brake warning lamp) (1) is turned ON.
3) Release parking brake with ignition switch ON and check that EBD warning lamp (brake warning lamp) goes off.
   If it doesn't go off, go to "TABLE-E" in this section.

TABLE – A ABS WARNING LAMP CIRCUIT CHECK – LAMP DOES NOT COME "ON" AT IGNITION SWITCH ON

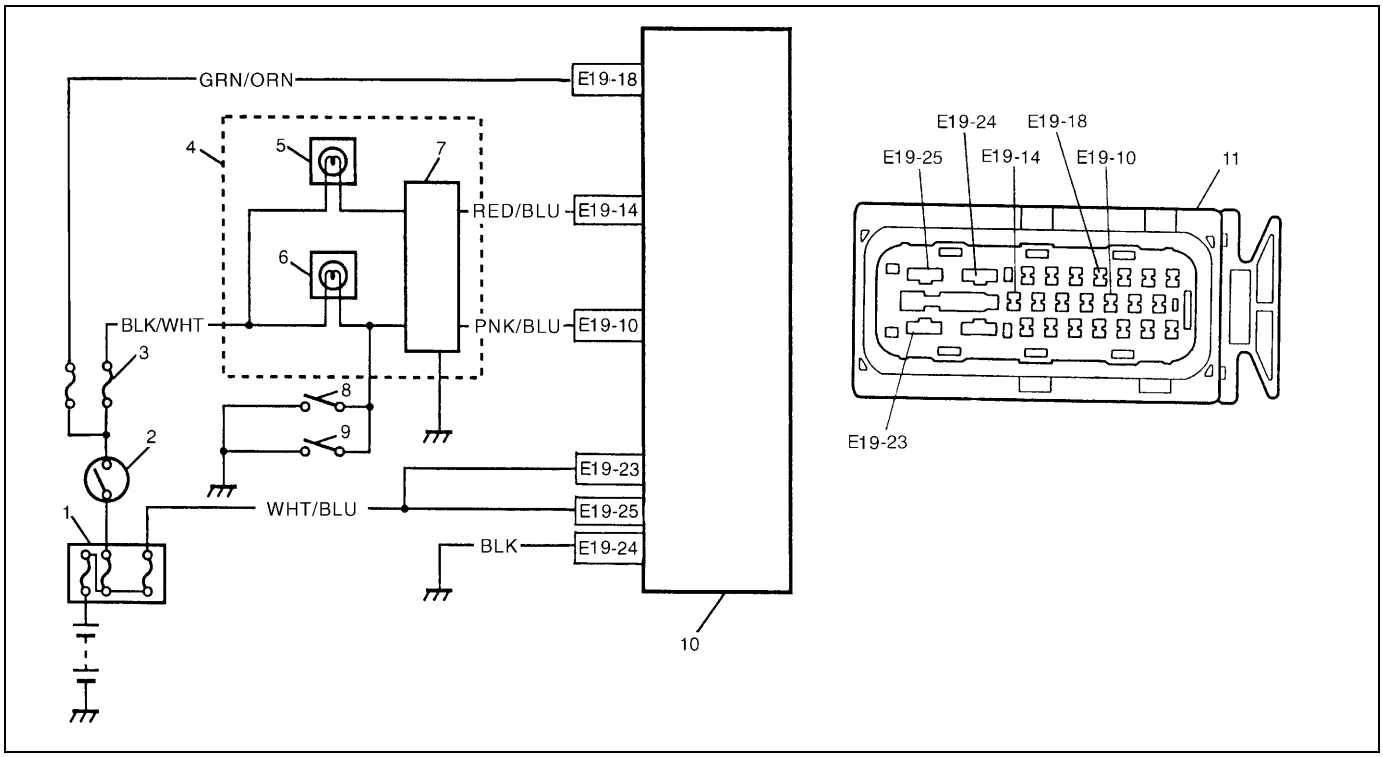

1. Main fuse	5. ABS warning lamp	9. Brake fluid level switch
2. Ignition switch	6. Brake warning lamp	10. ABS hydraulic unit/control module assembly
3. Circuit fuse	7. Lamp driver module	11. ABS hydraulic unit/control module connector
4. Combination meter	8. Parking brake switch	

CIRCUIT DESCRIPTION

Operation (ON/OFF) of ABS warning lamp is controlled by ABS control module through lamp driver module in combination meter.

If the Antilock brake system is in good condition, ABS control module turns ABS warning lamp ON at the ignition switch ON, keeps it ON for 2 seconds and then turns it OFF. If an abnormality in the system is detected, ABS warning lamp is turned ON continuously by ABS control module. Also, it is turned ON continuously by lamp driver module when the connector of ABS control module is disconnected.

INSPECTION

Step	Action	Yes	No
1	1) Turn ignition switch ON. Do other warning lamp come ON?	Go to Step 2.	Go to Step 4.
2	1) Disconnect ABS hydraulic unit/control module connector. Does ABS warning lamp light with ignition switch ON?	Substitute a known-good ABS hydraulic unit/control module assembly and recheck.	Go to Step 3.
3	1) Remove combination meter. Is bulb of ABS warning lamp in good condition?	"RED/BLU" circuit shorted to ground. If OK, replace combination meter (lamp driver module).	Replace bulb.
4	Is IG fuse in good condition?	Open in "BLK/WHT" wire to combination meter or poor connection.	Repair and replace.

TABLE – B ABS WARNING LAMP CIRCUIT CHECK – LAMP COMES "ON" STEADY

Refer to TABLE – A for System Circuit Diagram and Circuit Description.

INSPECTION

Step	Action	Yes	No
1	Perform diagnostic trouble code check. Is there any DTC (including code No.12, NO CODES on SUZUKI scan tool) exists?	Go to Step 2.	Go to Step 3.
2	Does malfunction DTC (other than code No.12) exist at Step 1?	Go to Step 7 of "ABS DIAGNOSTIC FLOW TABLE" in this section.	Go to Step 3.
3	1) Disconnect ABS hydraulic unit/control module connector. 2) Check for proper connection to ABS hydraulic unit/control module connector at terminals "E19-14", "E19-18" and "E19-24". 3) If OK then ignition switch ON and measure voltage at terminal "E19-18" of connector. Is it 10 – 14 V?	Go to Step 4.	"GRN/ORN" circuit open.
4	1) With ABS hydraulic unit/control module connector disconnected, turn ignition switch ON and light ABS warning lamp. 2) Connect terminal "E19-14" of disconnected connector to ground using service wire. Does ABS warning lamp turn off?	Go to Step 5.	"RED/BLU" circuit open. If wire and connection are OK, replace combination meter (lamp driver module).
5	1) Measure resistance from connector terminal "E19-24" to body ground. Is continuity indicated?	Substitute a known-good ABS hydraulic unit/control module assembly and recheck.	"BLK" circuit open.

TABLE – C ABS WARNING LAMP CIRCUIT CHECK – THE LAMP FLASHES CONTINUOUSLY WHILE IGNITION SWITCH IS ON

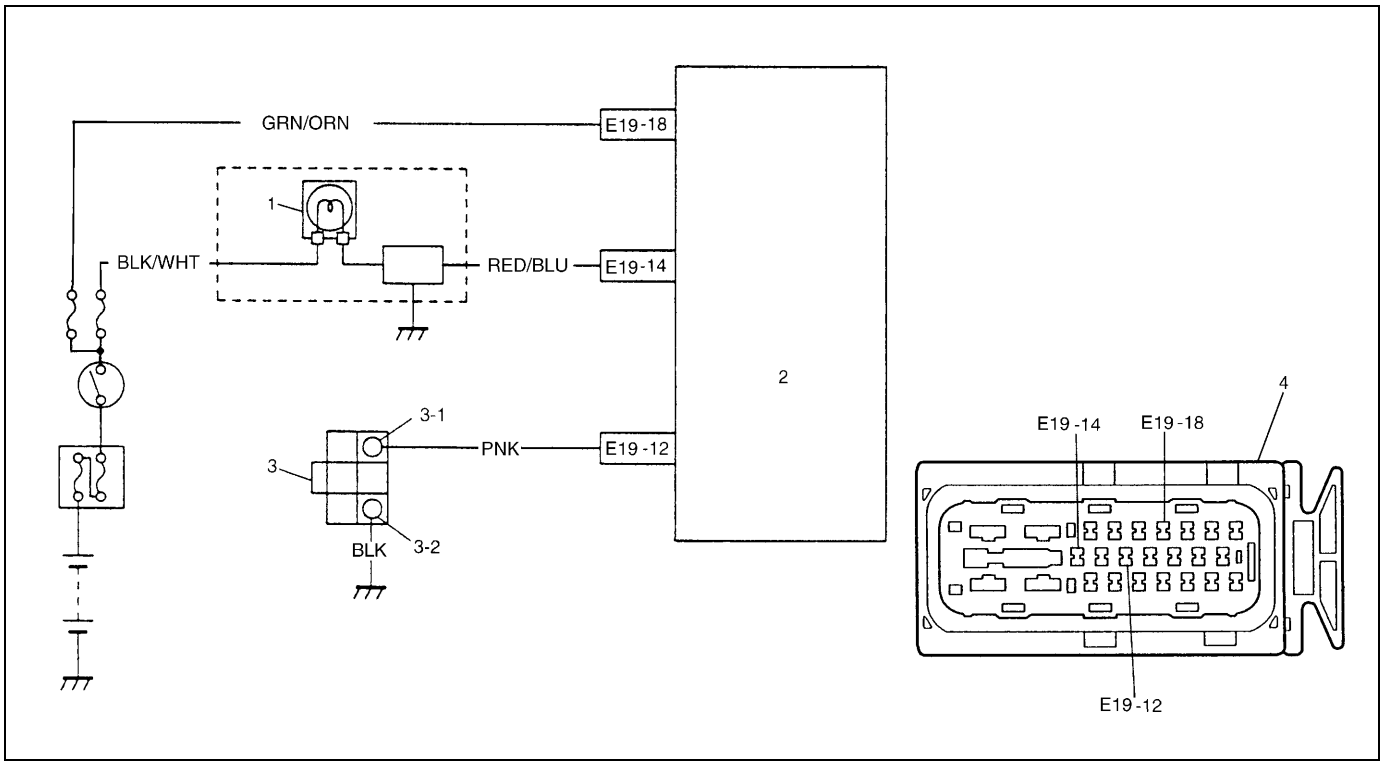

1. "ABS" warning lamp in combination meter	3. Diagnosis monitor coupler	3-2. Diagnosis ground terminal
2. ABS hydraulic unit/control module assembly	3-1. Diagnosis switch terminal	4. ABS hydraulic unit/control module connector

CIRCUIT DESCRIPTION

When diagnosis switch terminal is shorted or connected to the ground with ignition switch ON, diagnosis trouble code (DTC) is indicated by flashing of ABS warning lamp only in the following cases.

- Normal DTC (12) is indicated if no malfunction DTC is detected in the ABS.
- A history malfunction DTC is indicated by flashing of the lamp if a current malfunction DTC is not detected at that point although a history malfunction DTC is stored in memory.

INSPECTION

Step	Action	Yes	No
1	Is diagnosis switch terminal connected to ground via service wire?	Go to Step 3.	Go to Step 2.
2	1) Ignition switch ON. 2) Measure voltage between diagnosis switch terminal and ground. Is it 10 – 14 V?	Substitute a known-good ABS hydraulic unit/control module assembly and recheck.	"PNK" wire circuit shorted to ground.
3	1) Ignition switch ON. 2) Does flashing of ABS warning lamp indicate DTC?	Go to Step 7 of "ABS DIAGNOSTIC FLOW TABLE" in this section.	Substitute a known-good ABS hydraulic unit/control module assembly and recheck.

TABLE – D CODE (DTC) IS NOT OUTPUTTED EVEN WITH DIAGNOSIS SWITCH TERMINAL CONNECTED TO GROUND

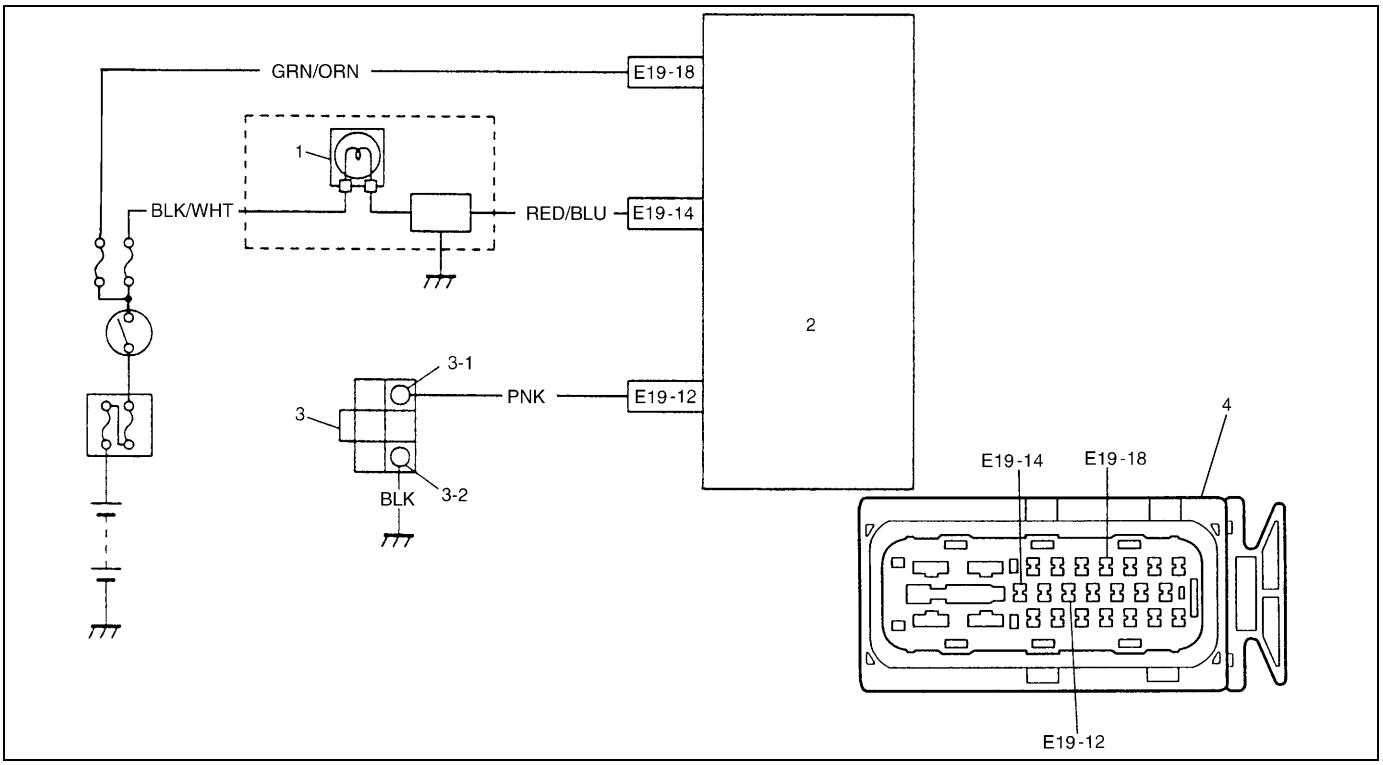

1. ABS warning lamp in combination meter	3. Diagnosis monitor coupler	3-2. Diagnosis ground terminal
2. ABS hydraulic unit/control module assembly	3-1. Diagnosis switch terminal	4. ABS hydraulic unit/control module connector

CIRCUIT DESCRIPTION

When diagnosis switch terminal is connected to ground with ignition switch turned ON, the ABS control module outputs diagnostic trouble code by flashing ABS warning lamp.

INSPECTION

Step	Action	Yes	No
1	Is it shorted diagnosis switch terminal and ground terminal by service wire properly?	Go to Step 2.	Connect service wire securely.
2	1) Disconnect service wire. 2) Disconnect ABS hydraulic unit/control module connector. 3) Measure resistance between diagnosis switch terminal and connector terminal "E19-12". Is it infinite (∞)?	"PNK" circuit open.	Go to Step 3.
3	1) Measure resistance between ground terminal of monitor coupler and body ground. Is continuity indicated?	Go to Step 4.	"BLK" circuit open or poor connection.
4	1) Check for proper connection to ABS hydraulic unit/control module at terminal "E19-12". 2) If OK, then check ABS warning lamp circuit referring to TABLE A, B and C. Is it in good condition?	Substitute a known-good ABS hydraulic with/control module assembly and recheck.	Repair "ABS" warning lamp circuit.

TABLE – E EBD WARNING LAMP (BRAKE WARNING LAMP) CHECK – LAMP COMES "ON" STEADY

CIRCUIT DESCRIPTION

EBD warning lamp (brake warning lamp) is controlled by parking brake switch, brake fluid level switch and ABS control module/hydraulic unit assembly through lamp driver module in combination meter. Refer to "TABLE – A" for circuit diagram.

INSPECTION

Step	Action	Yes	No
1	1) Make sure that : • Parking brake is completely released. • Brake fluid level is upper than the minimum level. Are the check results OK?	Go to Step 2.	Release parking brake completely and/or replenish brake fluid.
2	Does "ABS" warning lamp come on?	Perform "TABLE – B" previously outlined.	Go to Step 3.
3	1) Disconnect ABS hydraulic unit/control module connector. 2) Check for proper connection to ABS hydraulic unit/control module connector at terminals "E19-10". 3) If OK, apply chocks to wheels and select gear in neutral position (P range for A/T). 4) Keep brake pedal depressed and start engine. Release parking brake. 5) Connect terminal "E19-10" of disconnected connector to ground using service wire. Does EBD warning lamp (brake warning lamp) turn off?	Substitute a known-good ABS hydraulic unit/control module assembly and recheck.	"PNK/BLU" circuit open. If wire and connection are OK, replace combination meter.

DIAGNOSTIC TROUBLE CODE (DTC) CHECK (USING ABS WARNING LAMP)

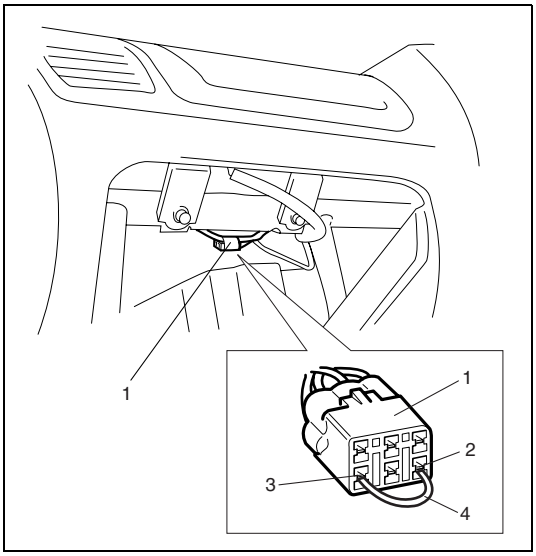

1) Perform ABS WARNING LAMP CHECK described above.
2) Using service wire (4), connect diagnosis switch terminal (2) of monitor coupler (1) to ground (3).
3) Turn ignition switch ON.
4) Read flashing of ABS warning lamp which represents DTC as shown in example below and write it down. When more than 2 DTCs are stored in memory, flashing for each DTC is repeated three times starting with the smallest DTC number in increasing order.
   For details of DTC, refer to “DTC TABLE”.

Example : When right-front wheel speed sensor circuit opens (DTC 21)

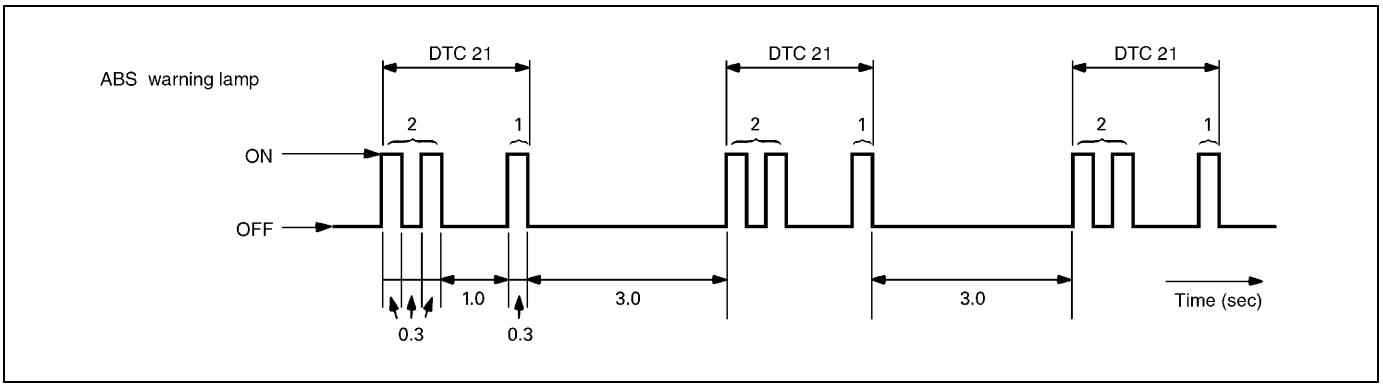

5) After completing the check, turn ignition switch off, disconnect service wire from monitor coupler.

DIAGNOSTIC TROUBLE CODE (DTC) CHECK (USING SUZUKI SCAN TOOL)

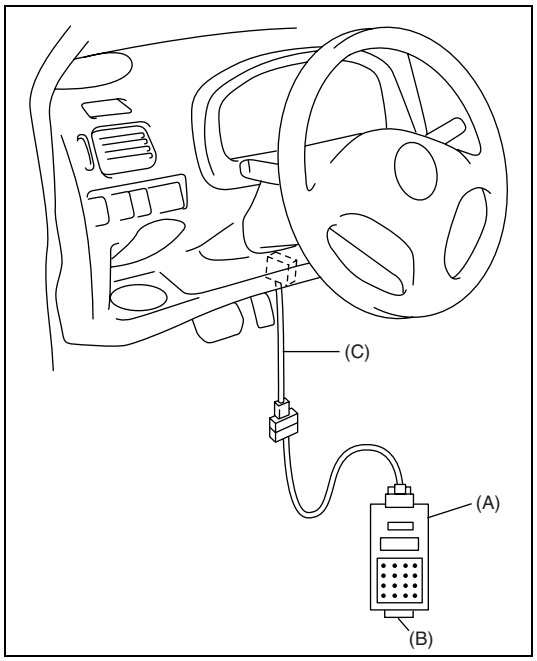

1) After setting cartridge for ABS to SUZUKI scan tool, connect SUZUKI scan tool to data link connector.

Special tool
(A) : 09931-76011 (SUZUKI scan tool)
(B) : Mass storage cartridge
(C) : 09931-76030 (16/14 pin DLC cable)

2) Turn ignition switch ON.
3) Read DTC according to instructions displayed on SUZUKI scan tool and print it or write it down. Refer to SUZUKI scan tool operator's manual for further details.
4) After completing the check, turn ignition switch off and disconnect SUZUKI scan tool from DLC.

DIAGNOSTIC TROUBLE CODE (DTC) CLEARANCE

WARNING:

When performing a driving test, select a safe place where there is neither any traffic nor any traffic accident possibility and be very careful during testing to avoid occurrence of an accident.

After repair or replace malfunction part(s), clear all DTCs by performing the following procedure.

1) Turn ignition switch OFF.

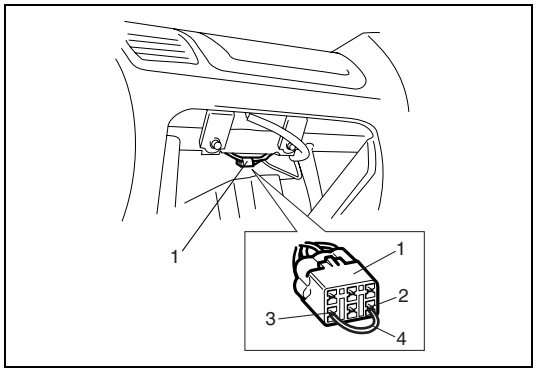

2) Using service wire (4), connect diagnosis switch terminal (2) of diagnosis monitor coupler (1) to ground terminal (3).
3) With connection described in above Step 2) maintained, turn ignition switch ON.

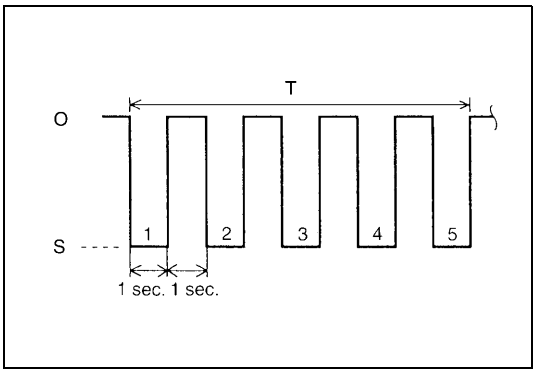

4) Repeat disconnecting and reconnecting of service wire between diagnosis and ground terminals 5 times or more at about 1sec. interval within 10 seconds.

O : Open
S : Short
T : About 10 seconds

5) Turn ignition switch OFF and disconnect service wire from monitor coupler.
6) Perform “DRIVING TEST” (Step 2 of “ABS DIAGNOSTIC FLOW TABLE” in this section) and “DTC CHECK” and confirm that normal DTC (DTC 12) is displayed ; not malfunction DTC.

NOTE:

It is also possible to clear DTC by using SUZUKI scan tool. Refer to Cartridge Manual for procedure to clear DTC.

DIAGNOSTIC TROUBLE CODE (DTC) TABLE

CAUTION:
Be sure to perform “ABS DIAGNOSTIC FLOW TABLE” before starting diagnosis.

DTC (displayed on SUZUKI scan tool)	DTC (indicated by ABS warning lamp)	ABS warning lamp flashing pattern	DIAGNOSTIC ITEMS	
NO DTC	12	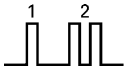	Normal	
C1013	13		ABS control module	
C1015	15		G sensor circuit	
C1021	21	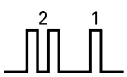	RF	Wheel speed sensor circuit
C1025	25		LF	
C1031	31	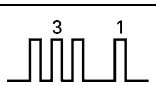	RR	
C1035	35	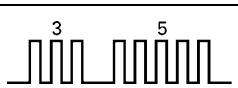	LR	

DTC (displayed on SUZUKI scan tool)	DTC (indicated by ABS warning lamp)	ABS warning lamp flashing pattern	DIAGNOSTIC ITEMS	
C1022	22	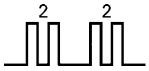	RF	Wheel speed sensor circuit or sensor ring
C1026	26	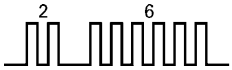	LF	
C1032	32	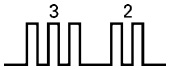	RR	
C1036	36		LR	
C1041	41		RF	Inlet solenoid valve circuit
C1042	42			Outlet solenoid valve circuit
C1045	45		LF	Inlet solenoid valve circuit
C1046	46			Outlet solenoid valve circuit
C1051	51		RR	Inlet solenoid valve circuit
C1052	52			Outlet solenoid valve circuit
C1055	55		LR	Inlet solenoid valve circuit
C1056	56			Outlet solenoid valve circuit
C1057	57		Power source	
C1061	61	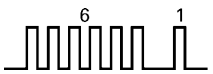	ABS pump motor and/or motor relay circuit	
C1063	63		Fail safe-relay	
C1071	71		ABS control module	

DTC C1013 (DTC 13) – SYSTEM SPECIFICATIONS DIFFERENT FROM ABS CONTROL MODULE SPECIFICATIONS

DESCRIPTION

When abnormal signal is inputted to a no-used terminal of control module white running or wrong ABS hydraulic unit/control module assembly is installed, this DTC will be set.

INSPECTION

1) Ignition switch OFF.
2) Check for proper connection from harness to control module.
3) If OK, substitute a known-good and correct specifications ABS hydraulic unit/control module assembly.
4) Recheck system.

DTC C1015 (DTC 15) – G SENSOR CIRCUIT

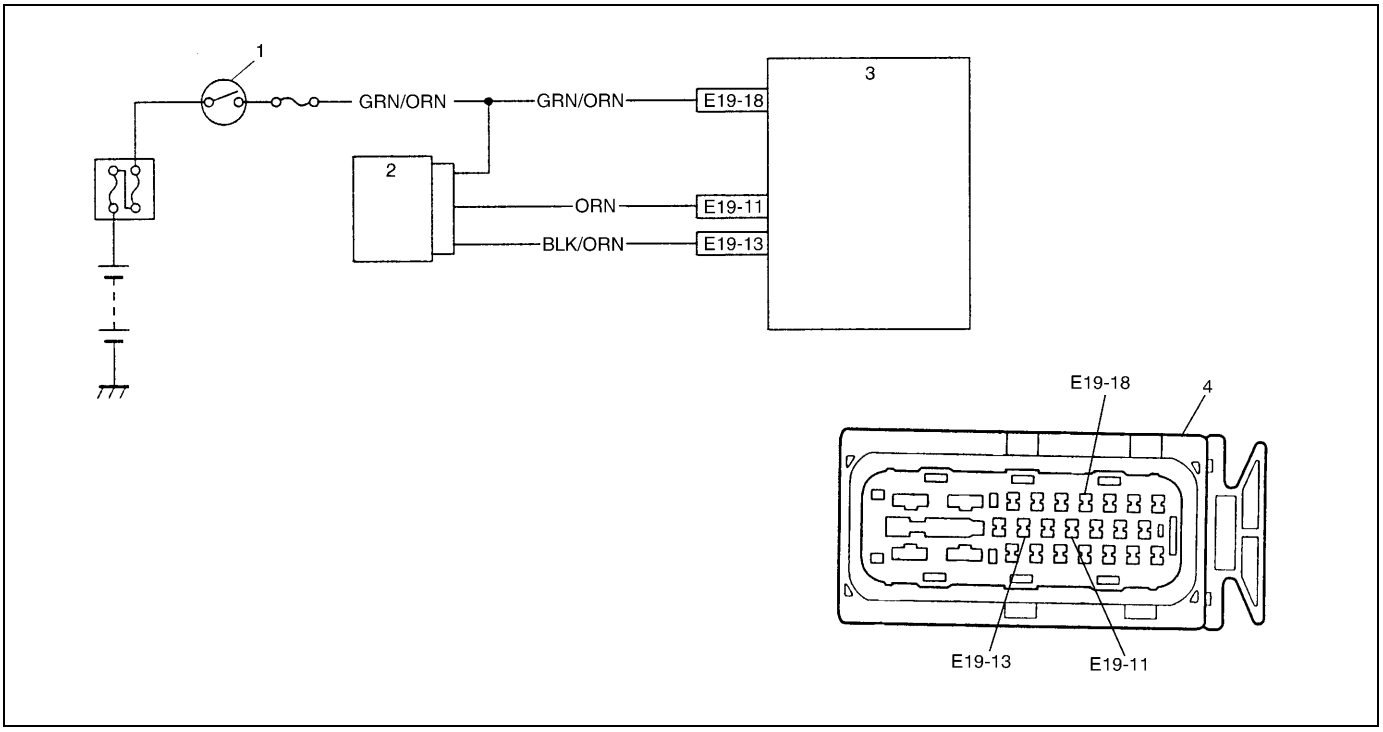

1. Ignition switch	3. ABS hydraulic unit/control module assembly
2. G sensor	4. ABS hydraulic unit/control module connector

DESCRIPTION

While a vehicle is at stop or running, if the potential difference between the sensor signal terminal “E19-11” and the sensor ground terminal “E19-13” is not within the specified voltage value, or if the signal voltage while at a stop does not vary from that while running, this DTC is set.
Therefore, this DTC may be set when a vehicle is lifted up and its wheel(s) is turned. In such case, clear the DTC and check again.

NOTE:

When ABS hydraulic unit/control module assembly for 4WD vehicle is installed to 2WD vehicle, this DTC is set. Before preforming the INSPECTION as shown below, check part number for supply of ABS hydraulic unit/control module assembly referring to parts catalogue.

INSPECTION

Step	Action	Yes	No
1	Is G sensor installed floor securely?	Go to Step 2.	Tighten sensor or bracket screw securely. If not, using new screw.
2	1) Ignition switch OFF. 2) Remove G sensor with bracket. 3) Check for proper connection to G sensor. 4) If OK then check G sensor referring to INSPECTION of “G SENSOR”. Is it in good condition?	Go to Step 3.	Replace G sensor.
3	1) Disconnect connectors from ABS hydraulic unit/control module assembly and G sensor. 2) Check for proper connection to ABS control module at terminals “E19-11” and “E19-13”. 3) If OK, then turn ignition switch ON and measure voltage between “GRN/ORN” terminal of sensor connector and body ground. It is 10 – 14 V?	Go to Step 4.	“GRN/ORN” circuit open.
4	Measure voltage between “ORN” terminal of sensor connector and body ground. Is it 0 V?	Go to Step 5.	“ORN” circuit shorted to power circuit.
5	1) Ignition switch OFF. 2) Check that “ORN” circuit is free from open or short to ground and “BLK/ORN” circuit. Is it in good condition?	“BLK/ORN” circuit open. If circuit is OK, substitute a known-good ABS hydraulic unit/control module assembly.	“ORN” circuit open or shorted to ground or “BLK/ORN” circuit.

DTC C1021 (DTC 21), DTC C1022 (DTC 22) – RIGHT-FRONT WHEEL SPEED SENSOR CIRCUIT OR SENSOR RING

DTC C1025 (DTC 25), DTC C1026 (DTC 26) – LEFT-FRONT WHEEL SPEED SENSOR CIRCUIT OR SENSOR RING

DTC C1031 (DTC 31), DTC C1032 (DTC 32) – RIGHT-REAR WHEEL SPEED SENSOR CIRCUIT OR SENSOR RING

DTC C1035 (DTC 35), DTC C1036 (DTC 36) – LEFT-REAR WHEEL SPEED SENSOR CIRCUIT OR SENSOR RING

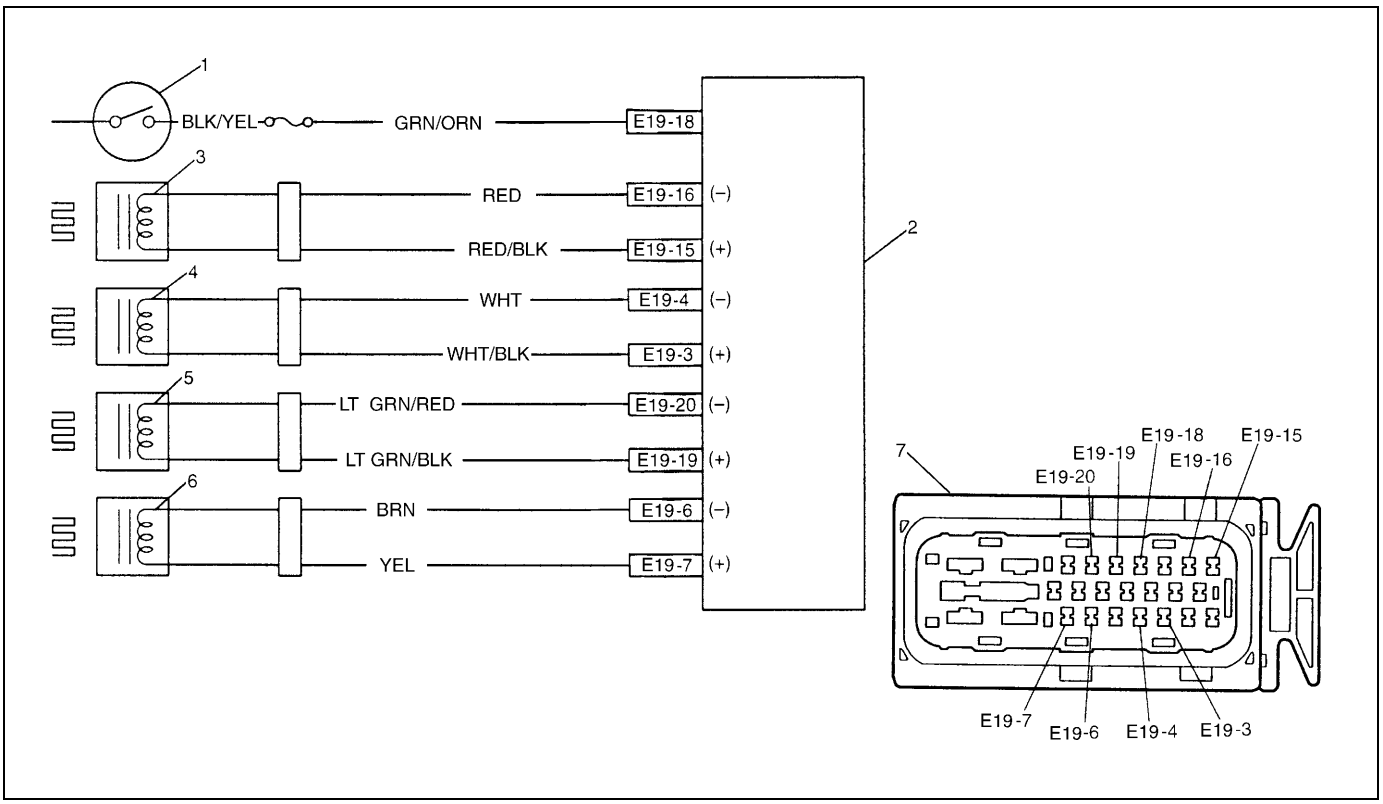

1. Ignition switch	4. Right-front wheel speed sensor	7. ABS hydraulic unit/control module connector
2. ABS control module/hydraulic unit assembly	5. Left-rear wheel speed sensor	
3. Left-front wheel speed sensor	6. Right-rear wheel speed sensor	

DESCRIPTION

The ABS control module monitors the voltage at the terminal of each sensor while the ignition switch is ON. When the voltage is not within the specified range, an applicable DTC will be set. Also, when no sensor signal is inputted at starting or while running, an applicable DTC will be set.

NOTE:

When the vehicle was operated in any of the following ways, one of these DTCs may be set even when the sensor is in good condition. If such possibility is suspected, repair the trouble (dragging of brake, etc.) of the vehicle, clear DTC once and then after performing the driving test as described in Step 2 of "ABS DIAGNOSIS FLOW TABLE", check whether or not any abnormality exists.

- **The vehicle was driven with parking brake pulled.**
- **The vehicle was driven with brake dragging.**
- **Wheel spin occurred while driving.**
- **Wheel(s) was turned while the vehicle was jacked up.**
- **The vehicle was stuck.**

INSPECTION

Step	Action	Yes	No
1	1) Disconnect applicable ABS wheel speed sensor coupler with ignition switch OFF. 2) Measure resistance between terminals of ABS wheel speed sensor. Refer to “FRONT WHEEL SPEED SENSOR” and/or “REAR WHEEL SPEED SENSOR” in this section. Is measured resistance value as specified?	Go to Step 2.	Replace ABS wheel speed sensor assembly.
2	1) Turn ignition switch OFF. 2) Disconnect ABS hydraulic unit/control module connector. 3) Check for proper connection to ABS control module at each sensor terminal. 4) If OK, then turn ignition switch ON and measure voltage between sensor terminal of module connector and body ground. Is it 0V?	Go to Step 3.	ABS wheel speed sensor circuit shorted to power.
3	1) Turn ignition switch OFF. 2) Connect ABS wheel speed sensor coupler. 3) Measure resistance between the following points. • Both ABS hydraulic unit/control module connector terminals of the corresponding sensor. This check result should be the same as above Step 1. • Either terminal of wheel speed sensor coupler and body ground. This check result should be no continuity. Are both check results OK?	Go to Step 4.	Circuit open or shorted to ground.
4	1) Remove applicable ABS wheel speed sensor. 2) Check sensor for damage or foreign material attached. Is it in good condition?	Go to Step 5.	Clean, repair or replace.
5	Check front and/or rear sensor ring for the following (remove rear drum as necessary) : • Rotor serration (teeth) neither missing nor damaged. • No foreign material being attached. • Rotor not being eccentric. • Wheel bearing free from excessive play. Are they in good condition?	Go to Step 6.	Clean, repair or replace.
6	1) Install ABS wheel speed sensor to knuckle. 2) Tighten sensor bolt to specified torque and check that there is no clearance between sensor and knuckle. Is it OK?	Go to Step 7.	Replace ABS wheel speed sensor.
7	Referring to “Reference” of “FRONT WHEEL SPEED SENSOR” and/or “Reference” of “REAR WHEEL SPEED SENSOR” in this section, check output voltage or waveform. Is specified voltage and/or waveform obtained?	Substitute a known-good ABS hydraulic unit/control module assembly and recheck.	Replace sensor and recheck.

DTC C1041 (DTC 41) – RIGHT-FRONT INLET SOLENOID CIRCUIT
DTC C1045 (DTC 45) – LEFT-FRONT INLET SOLENOID CIRCUIT
DTC C1051 (DTC 51) – RIGHT-REAR INLET SOLENOID CIRCUIT
DTC C1055 (DTC 55) – LEFT-REAR INLET SOLENOID CIRCUIT
DTC C1042 (DTC 42) – RIGHT-FRONT OUTLET SOLENOID CIRCUIT
DTC C1046 (DTC 46) – LEFT-FRONT OUTLET SOLENOID CIRCUIT
DTC C1052 (DTC 52) – RIGHT-REAR OUTLET SOLENOID CIRCUIT
DTC C1056 (DTC 56) – LEFT-REAR OUTLET SOLENOID CIRCUIT

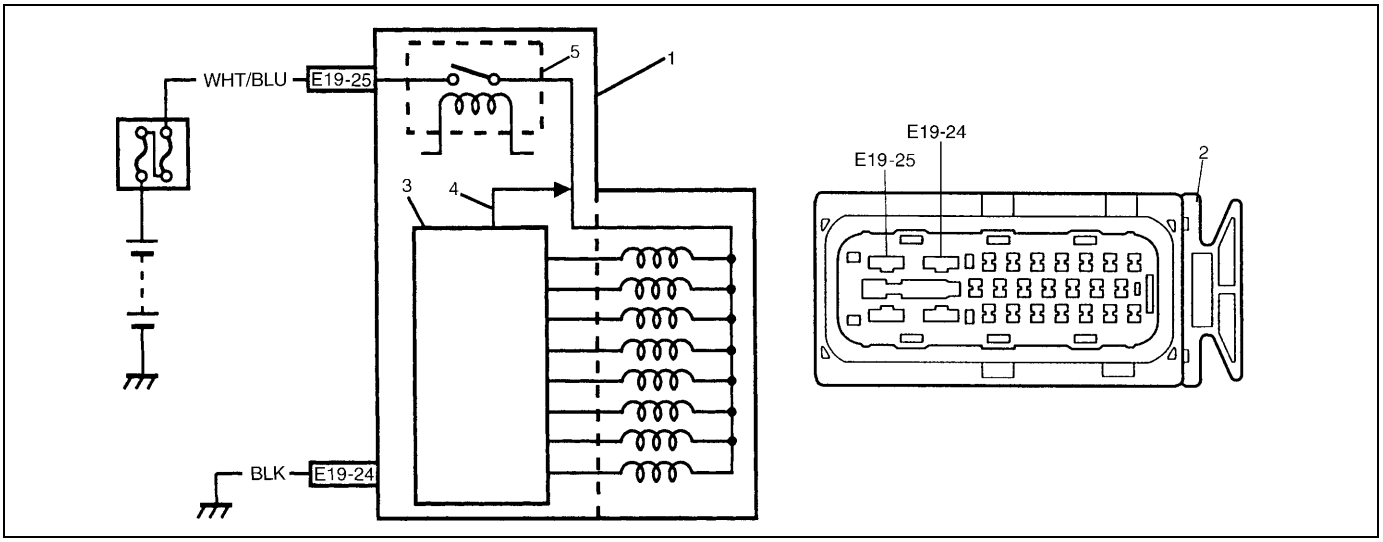

1. ABS hydraulic unit/control module assembly	3. ABS control module	5. Fail-safe relay
2. ABS hydraulic unit/control module assembly connector	4. Signal	

DESCRIPTION

The ABS control module monitors the output from the valve.
When the output of each valve exceeds the specified value compared with the signal sent from ABS control module, this DTC is set.

INSPECTION

Step	Action	Yes	No
1	1) Check solenoid operation referring to item “ABS HYDRAULIC UNIT OPERATION CHECK” in this section. Is it in good condition?	Check terminal “E19-25” connection. If connection is OK, substitute a known-good ABS hydraulic unit/control module assembly and recheck.	Go to Step 2.
2	1) Ignition switch OFF. 2) Disconnect ABS hydraulic unit/control module connector. 3) Check for proper connection to ABS hydraulic unit/control module connector at terminal “E19-25”. 4) If OK, then measure voltage between terminal “E19-25” of module connector and “E19-24”. Is it 10 – 14 V?	Substitute a known-good ABS hydraulic unit/control module assembly and recheck.	“WHT/BLU” or “BLK” circuit open.

DTC C1057 (DTC 57) – POWER SOURCE CIRCUIT

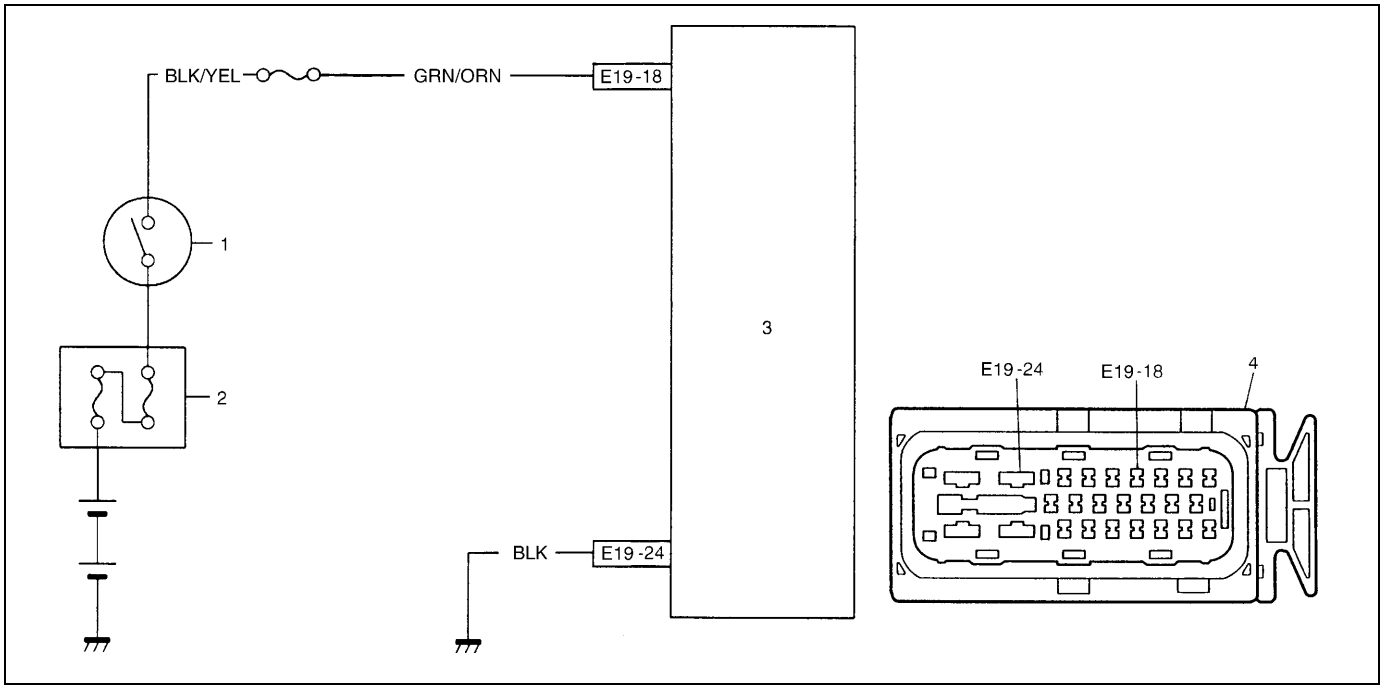

1. Ignition switch	3. ABS hydraulic unit/control module assembly
2. Main fuse	4. ABS hydraulic unit/control module connector

DESCRIPTION

The ABS control module monitors the power source voltage at terminal “E19-18”. When the power source voltage becomes extremely high or low, this DTC will be set. As soon as the voltage rises or lowers to the specified level, the set DTC will be cleared.

INSPECTION

Step	Action	Yes	No
1	1) Connect a voltmeter between battery positive (+) terminal and body ground. 2) Start the engine and measure the maximum voltage when racing the engine. Is it over 18V?	Check charging system referring to “CHARGING SYSTEM” section.	Go to Step 2.
2	1) Disconnect ABS hydraulic unit/control module connector. 2) Keep the engine idling, measure the voltage between terminal “E19-18” of ABS control module and body ground. Is it always under 9V?	Check charging system referring to “CHARGING SYSTEM” section. Imperfect short between wire “GRN/ORN” and ground.	Poor connection of terminal “E19-18” or “E19-24” of the ABS control module. If the above are in good condition, substitute a known-good ABS hydraulic unit/control module and recheck.

DTC C1061 (DTC 61) – ABS PUMP MOTOR CIRCUIT

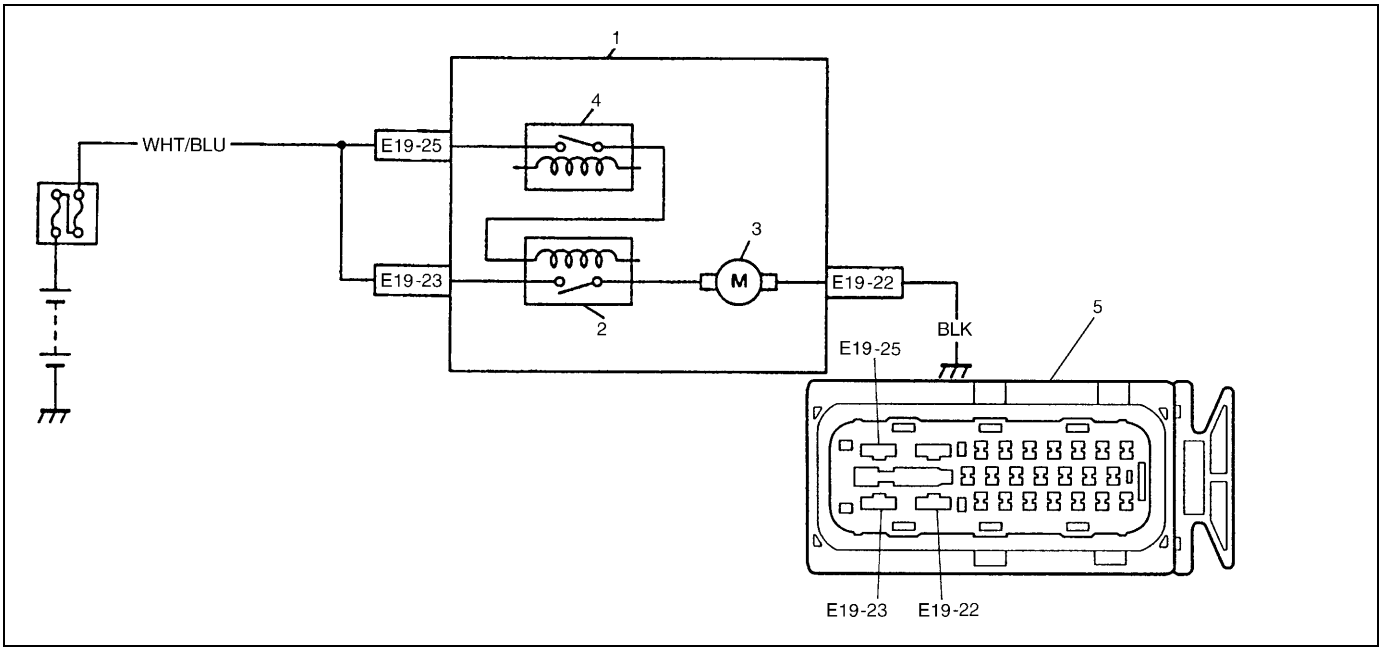

1. ABS hydraulic unit/control module assembly	3. ABS pump motor	5. ABS hydraulic unit/control module connector
2. ABS pump motor relay	4. ABS fail safe relay	

DESCRIPTION

The ABS control module monitors the voltage at monitor terminal of pump motor circuit constantly with the ignition switch turned ON. It sets this DTC when the voltage at the monitor terminal does not become high/low according to ON/OFF commands to the motor relay of the module (does not follow these commands).

INSPECTION

Step	Action	Yes	No
1	1) Check pump motor referring to "ABS HYDRAULIC UNIT OPERATION CHECK" in this section. Is it in good condition?	Check terminals "E19-25" and "E19-23" connection. If connections OK, substitute a known-good ABS hydraulic unit/control module assembly and recheck.	Go to Step 2.
2	1) Ignition switch OFF. 2) Disconnect ABS hydraulic unit/control module connector. 3) Check for proper connection to ABS hydraulic unit/control module connector at terminal "E19-23". 4) If OK, then measure voltage between terminal "E19-23" of module connector and body ground. Is it 10 – 14 V?	Go to Step 3.	"WHT/BLU" circuit open.
3	Measure resistance between terminal "E19-22" of ABS hydraulic unit/control module connector and body ground. Is it infinite (∞)?	"BLK" circuit open.	Substitute a known-good ABS hydraulic unit/control module assembly and recheck.

DTC C1063 (DTC 63) – ABS FAIL-SAFE RELAY CIRCUIT

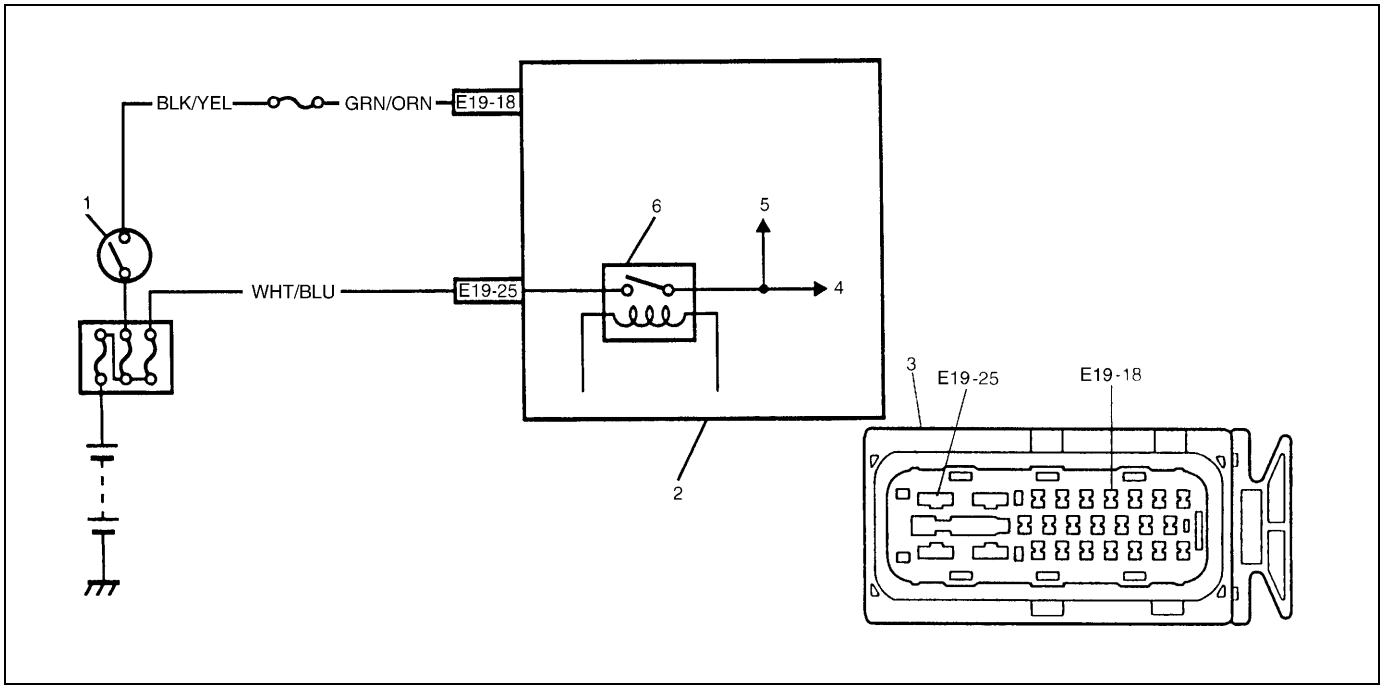

1. Ignition switch	3. ABS hydraulic unit/control module connector	5. To pump motor relay
2. ABS hydraulic unit/control module assembly	4. To solenoid valves	6. Fail-safe relay

DESCRIPTION

ABS control module monitors the voltage at the terminal of solenoid circuit constantly with ignition switch turned ON. Also, immediately after ignition switch is turned ON, perform initial check as follows.
Switch fail-safe relay in the order of OFF → ON and check if voltage changes to Low → High. If anything faulty is found in the initial check and when the voltage is low with ignition switch turned ON, this DTC will be set.

INSPECTION

Step	Action	Yes	No
1	Check battery voltage. Is it about 11 V or higher?	Go to Step 2.	Check charging system referring to “CHARGING SYSTEM” section.
2	Check ABS main fuse and connection. Is it in good condition?	Go to Step 3.	Repair and/or replace fuse.
3	1) Ignition switch OFF. 2) Disconnect ABS hydraulic unit/control module connector. 3) Check proper connection to ABS hydraulic unit/control module at terminal “E19-25”. 4) If OK, then measure voltage between connector terminal “E19-25” and body ground. Is it 10 – 14 V?	Substitute a known-good ABS hydraulic unit/control module assembly and recheck.	“WHT/BLU” circuit open or short to ground.

DTC C1071 (DTC 71) – ABS CONTROL MODULE

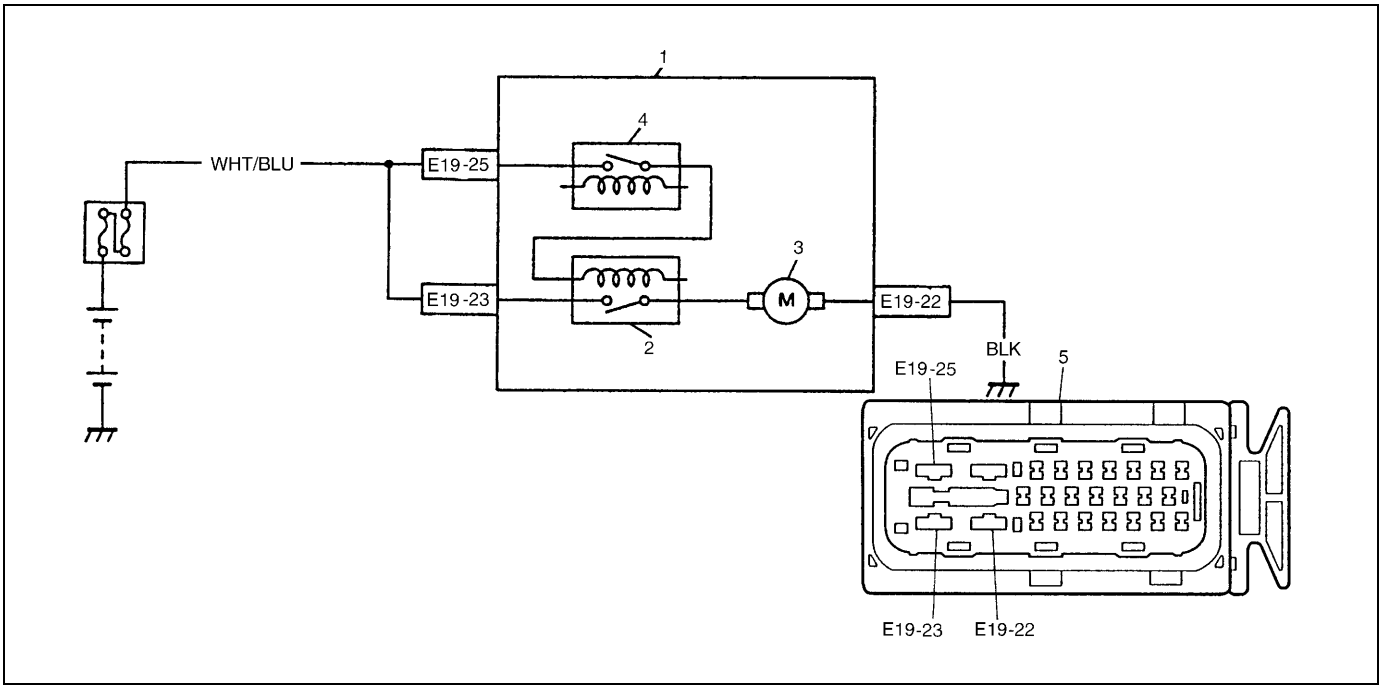

1. ABS hydraulic unit/control module assembly	3. ABS pump motor	5. ABS hydraulic unit/control module connector
2. ABS pump motor relay	4. ABS fail safe relay	

DESCRIPTION

This DTC will be set when an internal malfunction is detected in the ABS control module.

INSPECTION

Step	Action	Yes	No
1	Clear all DTCs and check DTC. Is it DTC 71?	Go to Step 2.	Could be a temporary malfunction of the ABS control module.
2	1) Check proper connection of ABS hydraulic unit/control module connector. 2) If OK, disconnect ABS hydraulic unit/control module connector and check the followings. • Voltage “E19-25” terminal : 10 – 14 V • Resistance between “E19-22” and body ground : Continuity Are the check result as specified above?	Replace ABS hydraulic unit/control module assembly.	Repair and recheck.

ON-VEHICLE SERVICE

PRECAUTIONS

When connector is connected to ABS hydraulic unit/control module assembly, do not disconnect connectors of sensors with ignition switch ON. Then DTC will be set in ABS control module.

ABS HYDRAULIC UNIT OPERATION CHECK (USING SUZUKI SCAN TOOL)

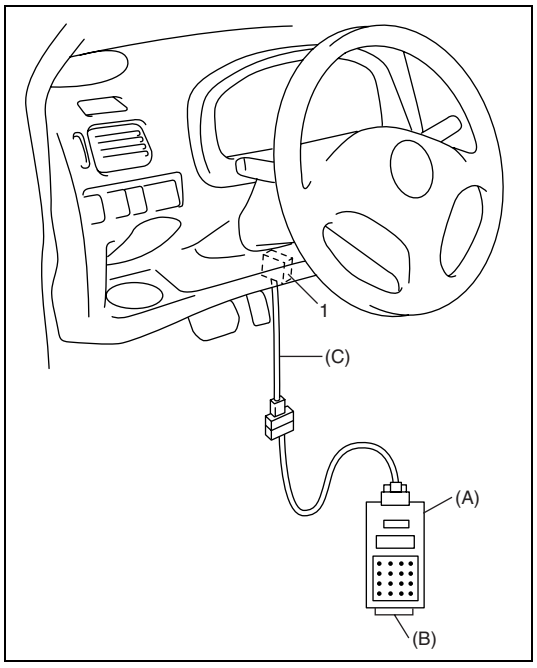

1) Connect SUZUKI scan tool to data link connector (DLC) (1) with ignition switch OFF.

Special tool
(A) : 09931-76011 (SUZUKI scan tool)
(B) : Mass storage cartridge
(C) : 09931-76030 (16/14 pin DLC cable)

2) Turn ignition switch to ON position and check actuator operation using “HYDRAULIC CONTROL TEST” under “miscellaneous test” (“MISC. TEST”) mode of SUZUKI scan tool.

ABS HYDRAULIC UNIT OPERATION CHECK (NOT USING SUZUKI SCAN TOOL)

1) Check that basic brake system other than ABS is in good condition.

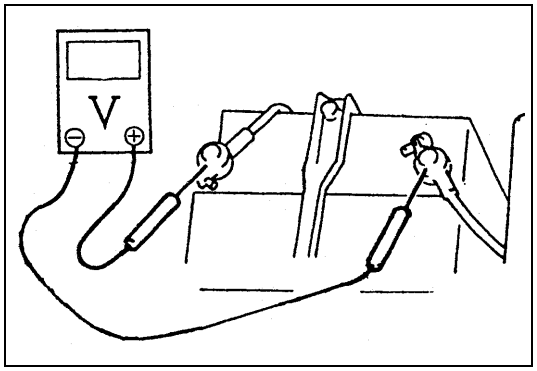

2) Check that battery voltage is 11 V or higher.
3) With ABS warning lamp, check that no abnormality is detected in ABS. Refer to “DIAGNOSTIC TROUBLE CODE (DTC) CHECK” in this section.
4) Lift up vehicle.
5) Set transmission to neutral and release parking brake.
6) Turn each wheel gradually by hand to check if brake dragging occurs. If it does, correct.

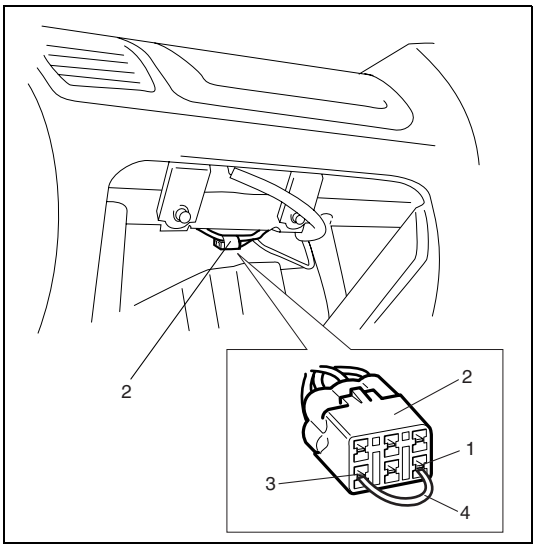

7) With diagnosis switch terminal (1) of monitor coupler (2) connected to ground terminal (3) using service wire (4), turn ignition switch ON and check if ABS warning lamp indicates DTC 12.
   If malfunction DTC is indicated, repair it first.
8) Turn ignition switch OFF.

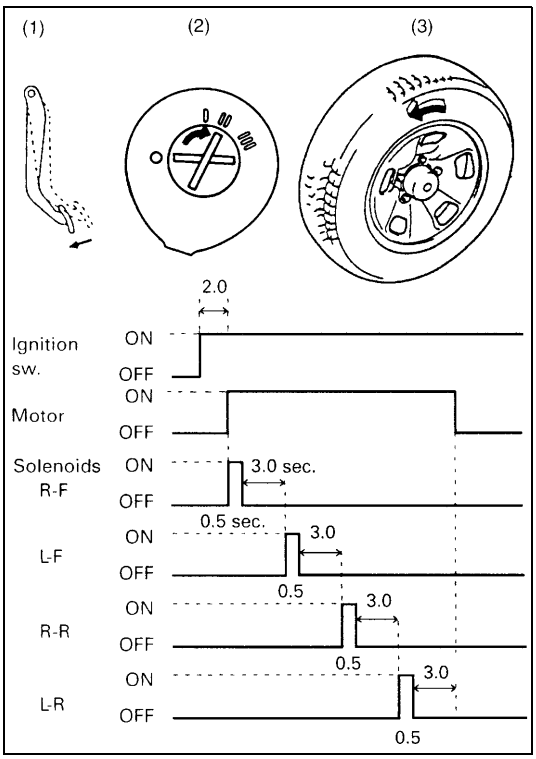

9) Perform the following checks with help of another person.
   Brake pedal (1) should be depressed and then ignition switch (2) turned ON by one person and wheel (3) should be turned by another person's hand. At this time, check that :
   - Operation sound of solenoid is heard and wheel turns only about 0.5 sec. (Brake force is depressurized).
   - Operation sound of pump motor is heard and pulsation is felt at brake pedal.
10) If all 4-wheels cannot be checked during one ignition cycle (OFF → ON), repeat Steps 8) and 9) till all 4 wheels are checked.
    If a faulty condition is found in Steps 9) and 10), replace hydraulic unit/control module assembly.
11) Turn ignition switch OFF and remove service wire from monitor coupler.

ABS HYDRAULIC UNIT/CONTROL MODULE ASSEMBLY

CAUTION:

Never disassemble ABS hydraulic unit/control module assembly, loosen blind plug or remove motor. Performing any of these prohibited services will affect original performance of ABS hydraulic unit/ control module assembly.

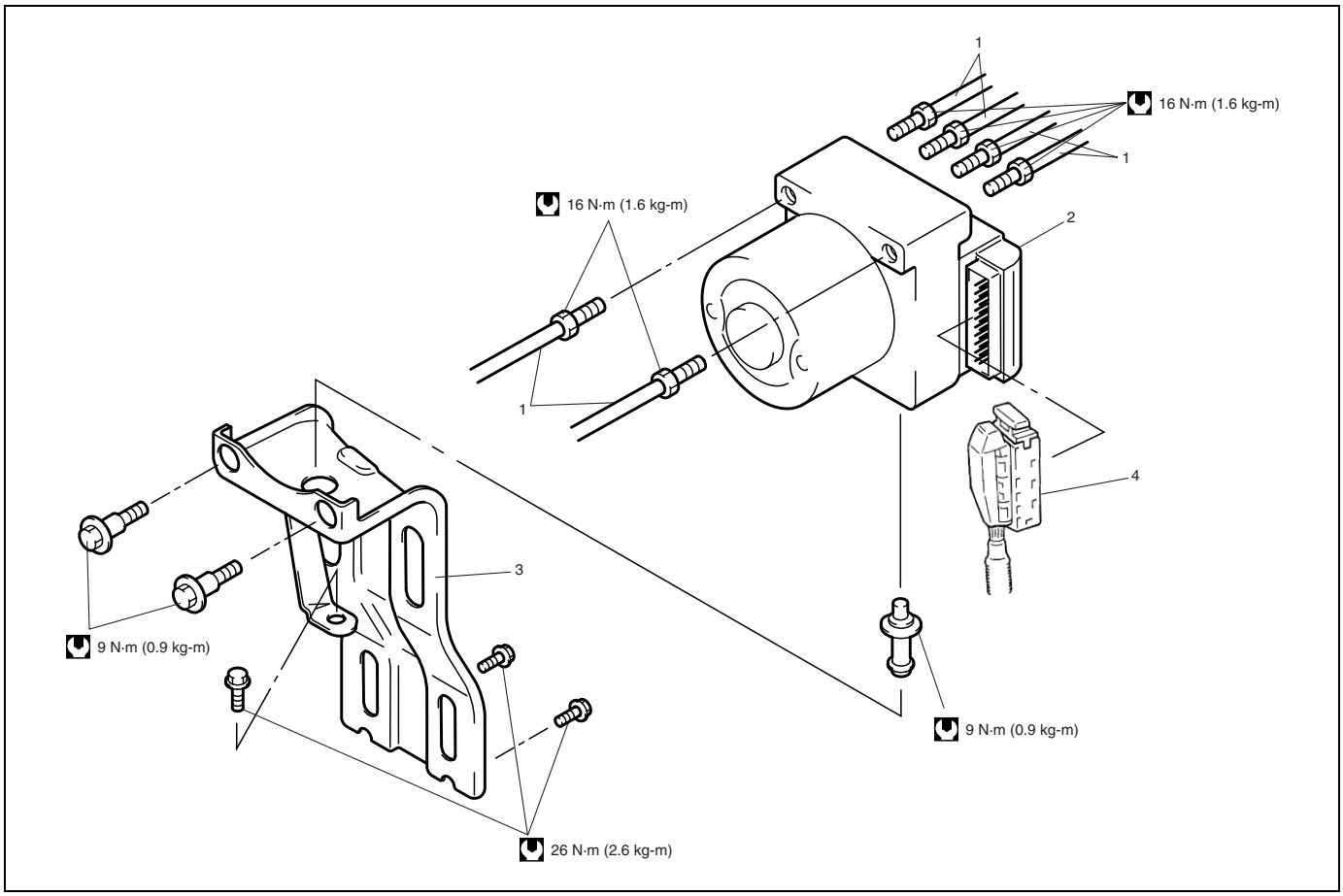

1. Brake pipe	3. Bracket
2. ABS hydraulic unit/control module assembly	4. Connector

HYDRAULIC UNIT INSPECTION

Check hydraulic unit for fluid leakage.
If any, repair or replace.

REMOVAL

1) Disconnect negative cable from battery.
2) Disconnect ABS hydraulic unit/control module assembly connector (1) by pulling up lock (2).

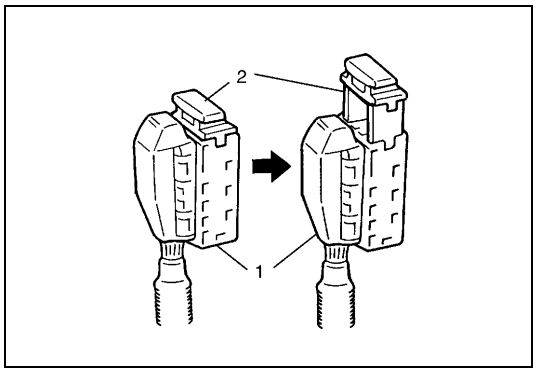

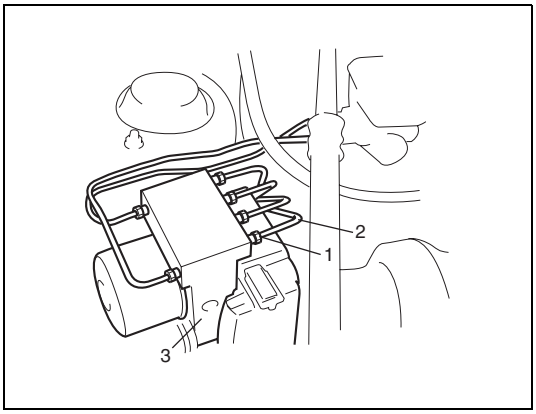

3) Using special tool, loosen flare nuts (1) and disconnect brake pipes (2) from ABS hydraulic unit/control module assembly (3).

Special tool
09950-78220

NOTE:

Put bleeder plug cap onto pipe to prevent fluid from spilling. Do not allow brake fluid to get on painted surfaces.

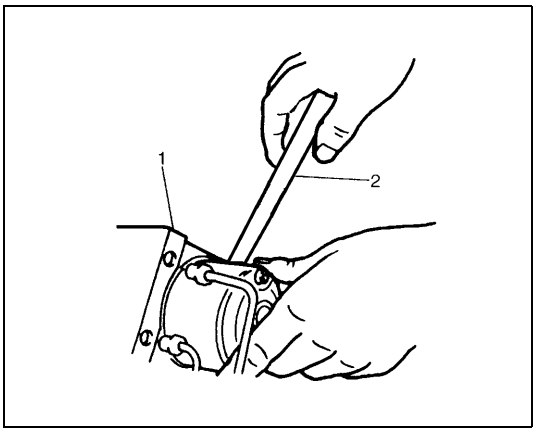

4) Remove two nuts and disconnect take out ABS hydraulic unit/control module assembly (1) from bracket using flat end rod or the like (2).

CAUTION:

- **Do not give an impact to hydraulic unit.**
- **Use care not to allow dust to enter hydraulic unit.**
- **Do not place hydraulic unit on its side or upside down. Handling it in inappropriate way will affect its original performance.**

INSTALLATION

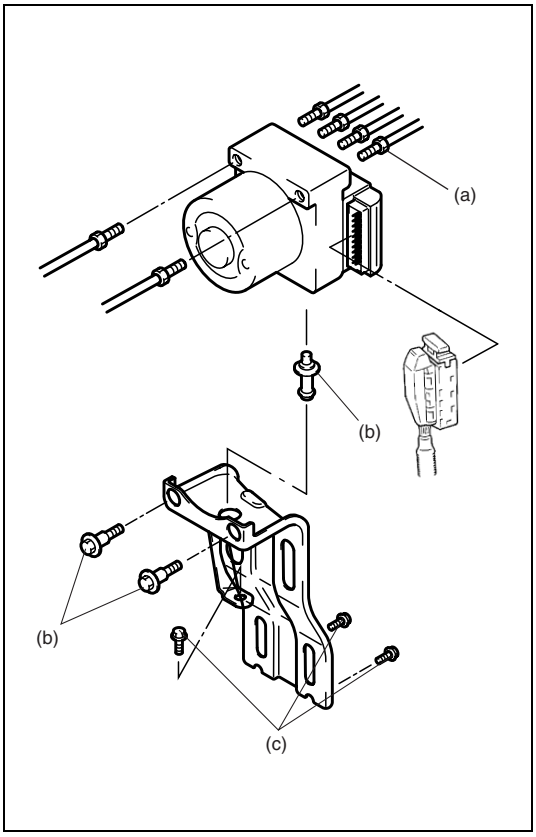

1) Install hydraulic unit/control module assembly by reversing removal procedure.

Tightening torque
Brake pipe flare nut (a) :
16 N·m (1.6 kg-m, 11.5 lb-ft)
ABS hydraulic unit/control module assembly bolt (b) :
9 N·m (0.9 kg-m, 6.5 lb-ft)
ABS hydraulic unit/control module assembly bracket bolt (c) : 26 N·m (2.6 kg-m, 18.0 lb-ft)

2) Bleed air from brake system referring to “BRAKES” section.
3) Check each installed part for fluid leakage and perform “ABS HYDRAULIC UNIT OPERATION CHECK” in this section.

NOTE:

For new ABS hydraulic unit/control module assembly, if “ABS HYDRAULIC UNIT OPERATION CHECK” procedure has not been performed, “ABS” warning lamp may flash when ignition switch is turned ON position.
Accordingly preform “ABS HYDRAULIC UNIT OPERATION CHECK” to stop flashing of ABS warning lamp.

FRONT WHEEL SPEED SENSOR

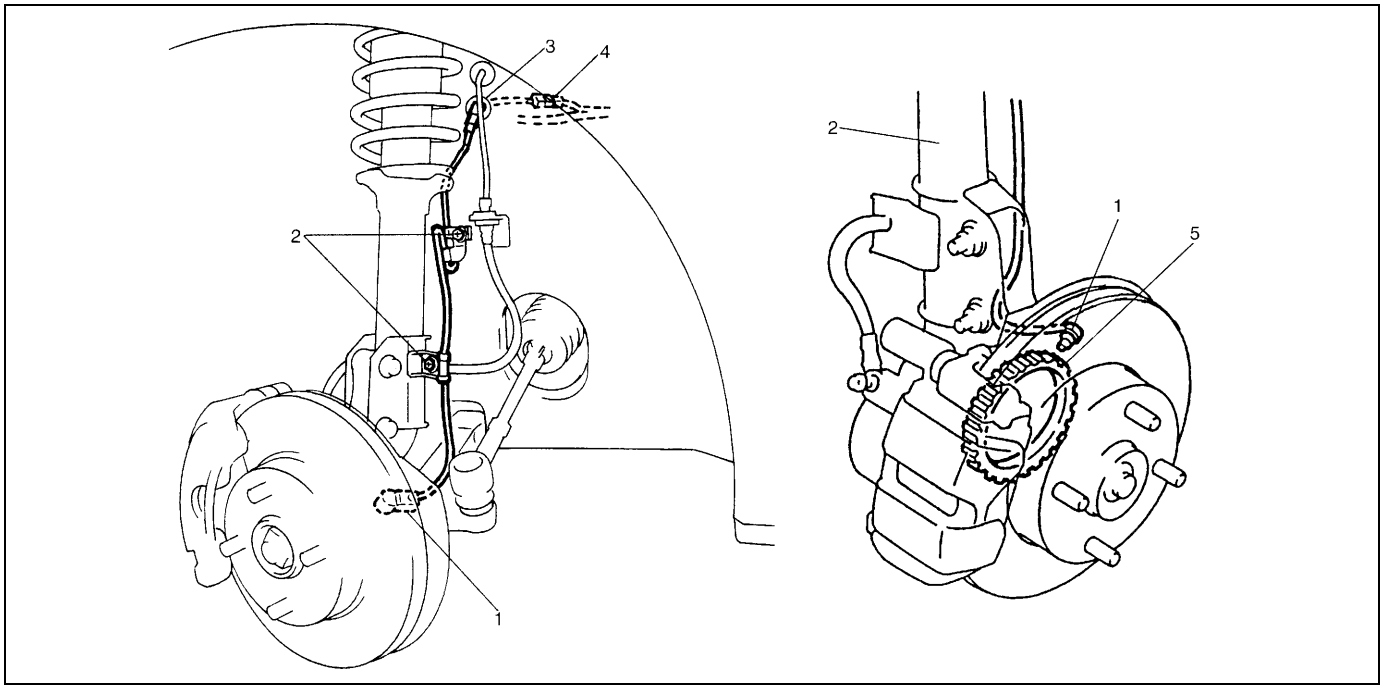

1. Left front wheel speed sensor	3. Grommet	5. Sensor ring
2. Clamp bolt	4. Connector	

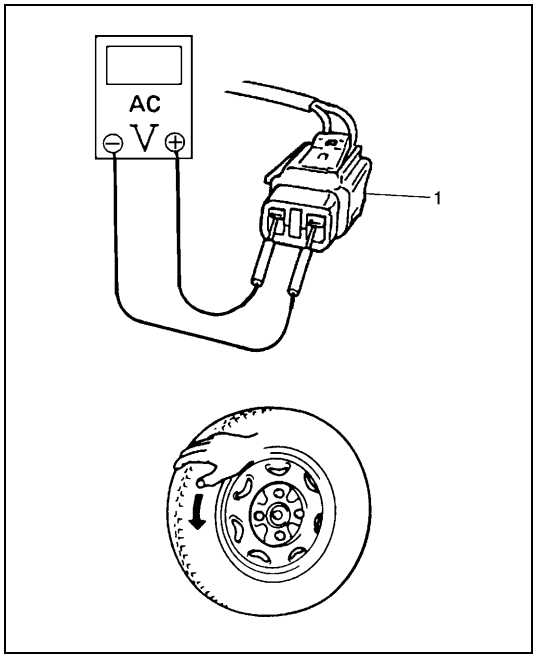

OUTPUT VOLTAGE INSPECTION

1) Turn ignition switch OFF.
2) Hoist vehicle a little.
3) Disconnect wheel speed sensor connector.
4) Disconnect wheel speed sensor grommet from vehicle body.
5) Connect voltmeter between connector (1) terminals.
6) While turning wheel by hand at a speed of approximately 1/2 rotation to 1 rotation per second, check AC voltage of sensor.

Output AC voltage at 1/2 to 1 rotation per second
: 106 mV or more

7) If measured voltage is not as specified, check sensor, rotor and their installation conditions.

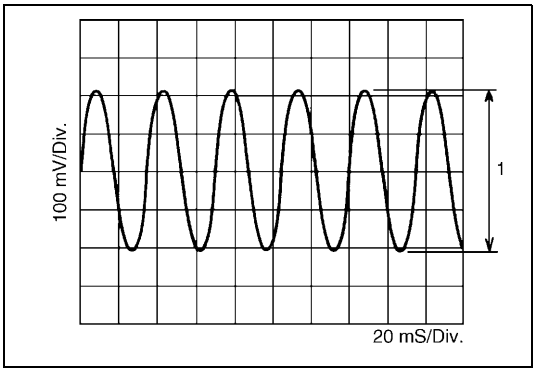

Reference

When using oscilloscope for this check, check if peak-to-peak voltage (1) meets specification and waveform is complete.

Peak-to-peak voltage at 1/2 to 1 rotation per second
: 150 mV or more at 20 Hz

REMOVAL

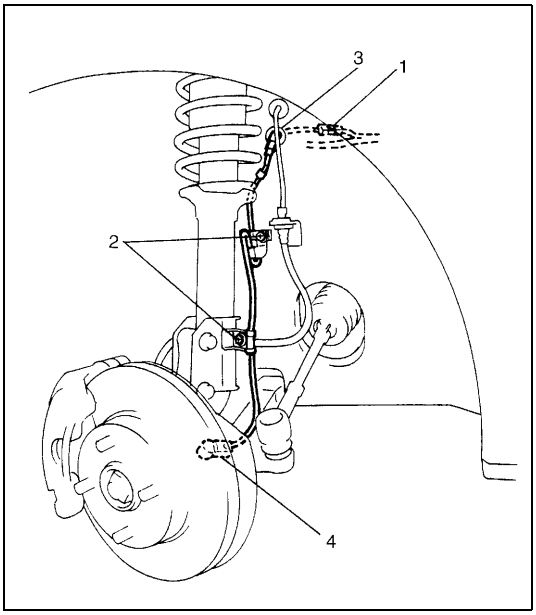

1) Disconnect negative cable at battery.
2) Disconnect front wheel speed sensor coupler (1).
3) Hoist vehicle and remove wheel.
4) Remove harness clamp bolts (2) and grommet (3).
5) Remove front wheel speed sensor (4) from knuckle.

CAUTION:
- **Do not pull wire harness when removing front wheel speed sensor.**
- **Do not cause damage to surface of front wheel speed sensor and do not allow dust, etc. to enter its installation hole.**

SENSOR INSPECTION

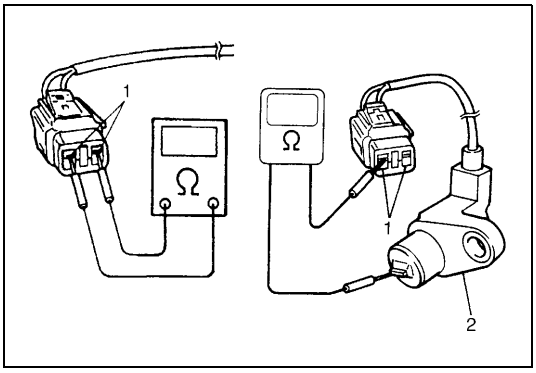

- Check sensor for damage.
- Check sensor for resistance and continuity.

Between both terminals (1) sensor
: 1.2 – 1.6 kΩ at 20°C (68°F)

Between sensor terminal and sensor body (2)
: No continuity

- If the check result is not as specified and any malcondition is found, replace.

SENSOR ROTER INSPECTION

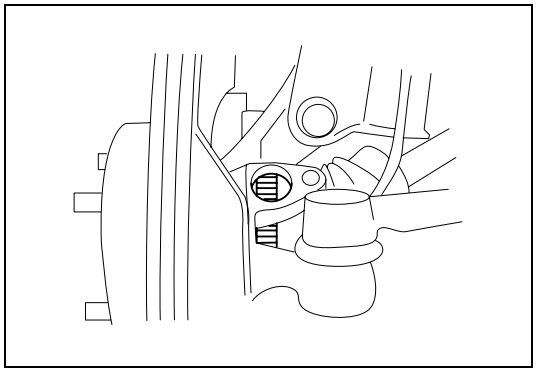

- Check rotor for being missing, damaged or deformed.
- Turn drive shaft and check if rotor rotation is free from eccentricity and looseness.
- Check that no foreign material is attached.

  If any faulty is found, repair or replace. Refer to “WHEEL HUB” in Section 3D.

INSTALLATION

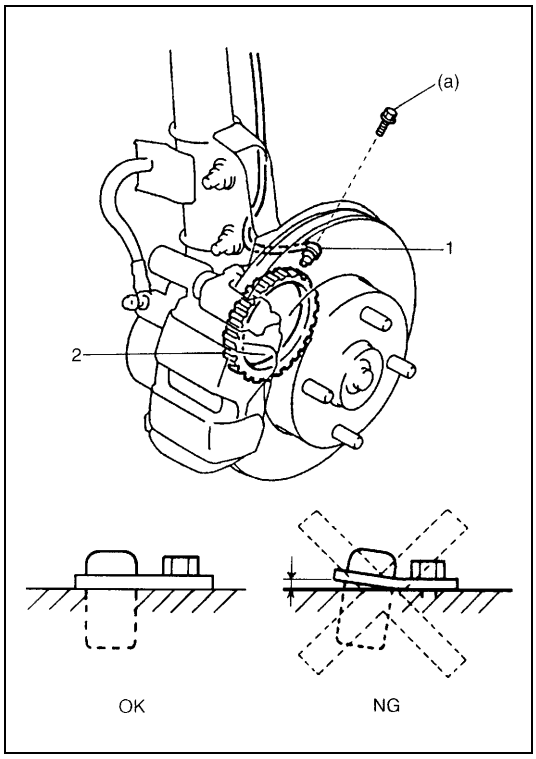

1) Check that no foreign material is attached to sensor (1) and sensor ring (2).
2) Install it by reversing removal procedure.

Tightening torque
Front wheel speed sensor bolt (a) :
10 N·m (1.0 kg-m, 7.5 lb-ft)

CAUTION:
Do not pull or twist wire harness more than necessary when installing front wheel speed sensor.

3) Check that there is no clearance between sensor and knuckle.

FRONT WHEEL SPEED SENSOR RING

NOTE:
The front wheel sensor ring can not be removed or replaced alone. If front wheel sensor ring needs to be replaced, replace it as a wheel side joint assembly of drive shaft.

For removal and installation of wheel side joint assembly of drive shaft, refer to “FRONT DRIVE SHAFT” section.

REAR WHEEL SPEED SENSOR

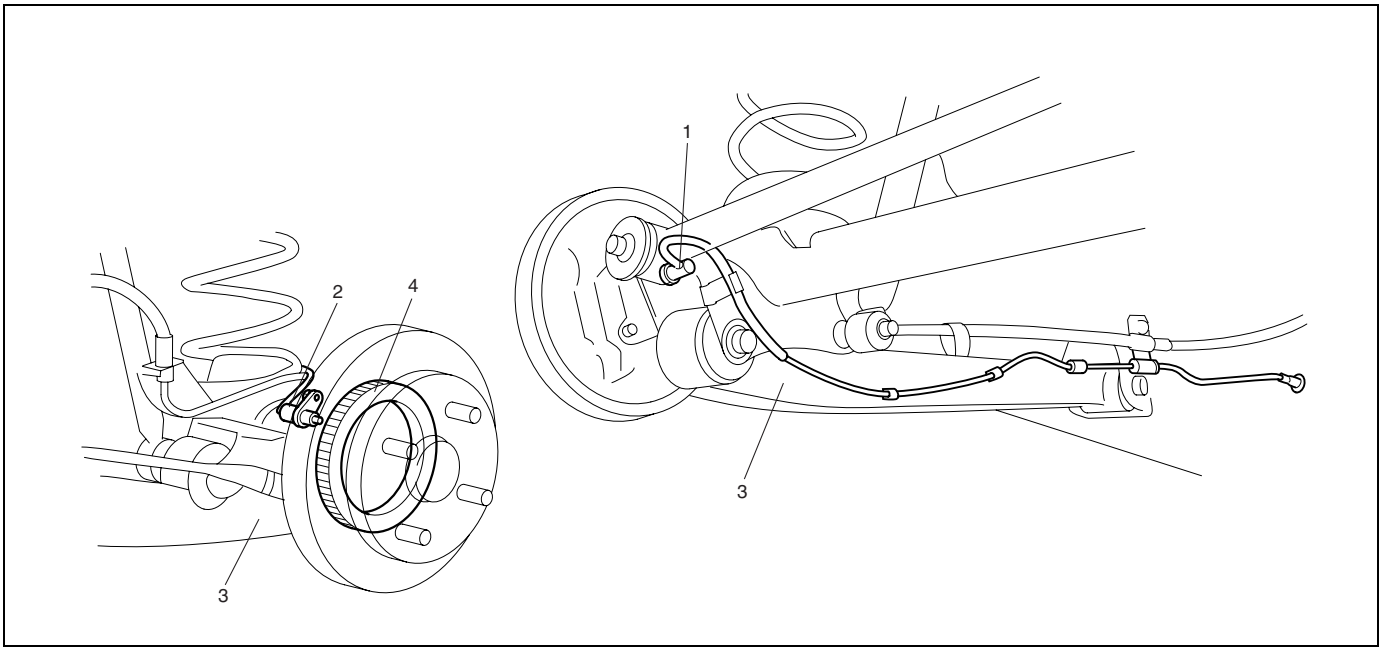

1. Left rear wheel speed sensor	3. Trailing arm
2. Right rear wheel speed sensor	4. Sensor ring

OUTPUT VOLTAGE INSPECTION

1) Turn ignition switch OFF.
2) Remove rear seat referring to Section 9.
3) Turn over floor carpet.
4) Hoist vehicle.
5) Disconnect connector of wheel speed sensor.

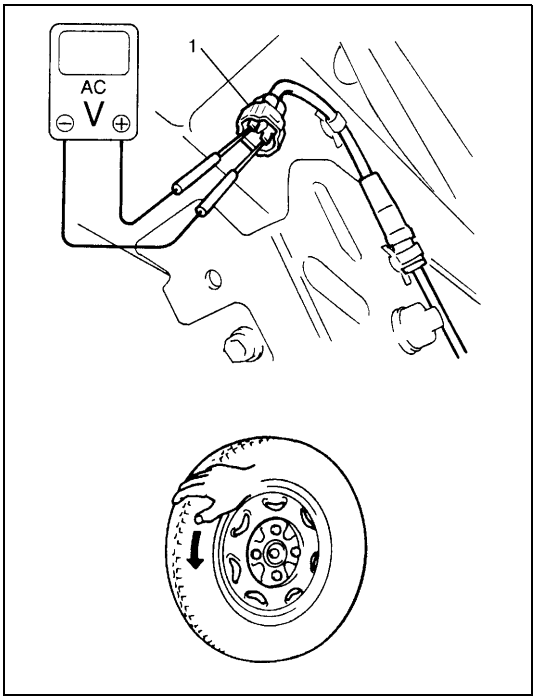

6) Connect voltmeter between connector (1) terminals.
7) While turning wheel at a speed of approximately 1/2 rotation to 1 rotation per second, check AC voltage of sensor.

Output AC voltage at 1/2 to 1 rotation per second
2WD vehicle : 85 mV or more
4WD vehicle : 106 mV or more

8) If measured voltage is not as specified, check sensor, rotor and their installation conditions.

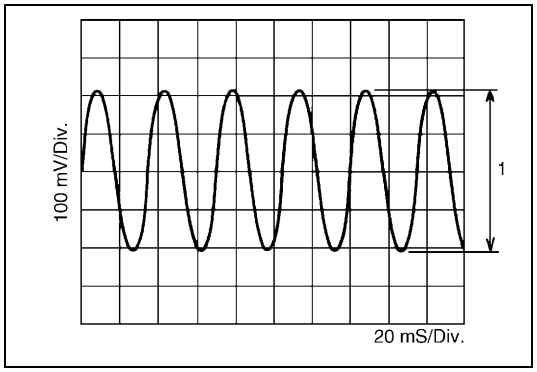

Reference

When using oscilloscope for this check, check if peak-to-peak voltage (1) meets specification and waveform is complete.

Peak-to-peak voltage at 1/2 to 1 rotation per second
2WD vehicle : 120 mV or more at 20 Hz
4WD vehicle : 150 mV or more at 20 Hz

REMOVAL

1) Disconnect negative cable at battery.
2) Remove rear seat referring to Section 9.
3) Turn over floor carpet.
4) Hoist vehicle.

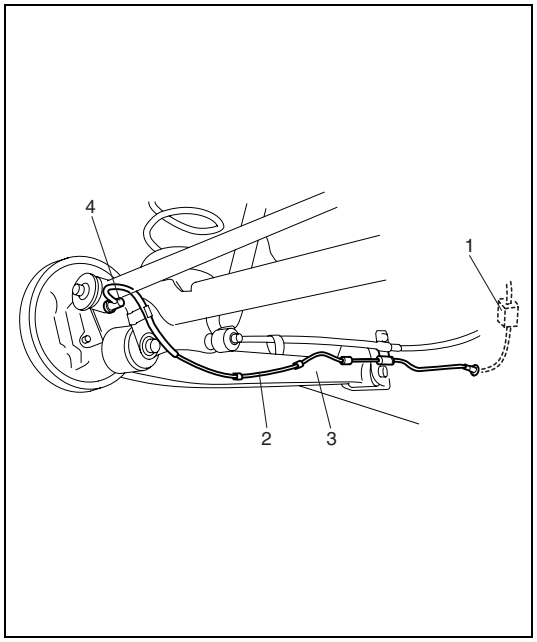

5) Disconnect rear wheel speed sensor coupler (1).
6) Detach ABS wheel sensor wire harness (2) from suspension frame (3).

NOTE:

Do not detach crip of rear wheel speed sensor connector from vehicle body unless replacement is necessary.

7) Remove rear wheel speed sensor (4) from rear axle housing.

CAUTION:

- **Do not pull wire harness when removing rear wheel speed sensor.**
- **Do not cause damage to surface of rear wheel speed sensor and do not allow dust, etc. to enter its installation hole.**

SENSOR INSPECTION

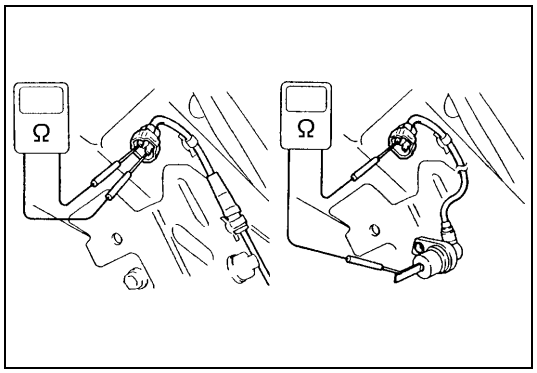

- Check sensor for damage.
- Check sensor for resistance and continuity.

Between both terminals of sensor
2WD vehicle : 0.9 – 1.3 kΩ at 20°C (68°F)
4WD vehicle : 1.2 – 1.6 kΩ at 20°C (68°F)

Between sensor terminal and sensor body
: No continuity

- If the check result is not as specified and any malcondition is found, replace.

SENSOR ROTOR INSPECTION

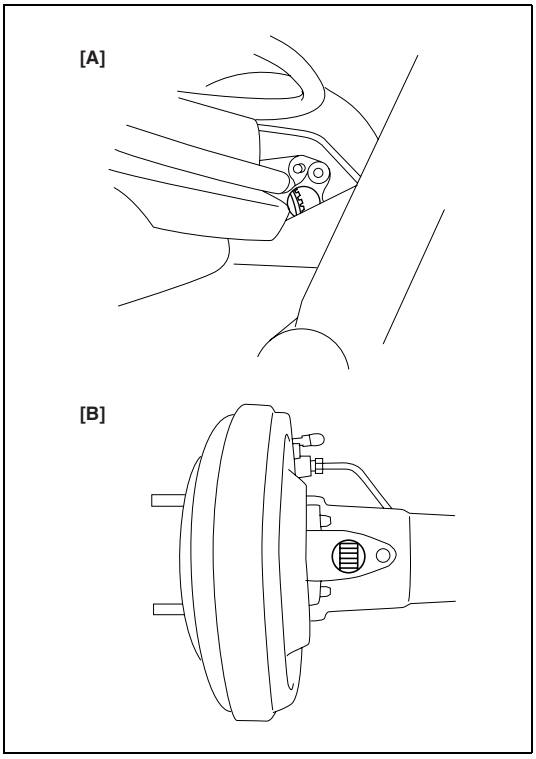

- Check rotor serration (teeth) for being missing, damaged or deformed.

[A] : For 2WD
[B] : For 4WD

- Turn wheel and check if rotor rotation is free from eccentricity and looseness.
- Check that no foreign material is attached.
- If any faulty is found, repair or replace.

INSTALLATION

Reverse removal procedure for installation noting the following.

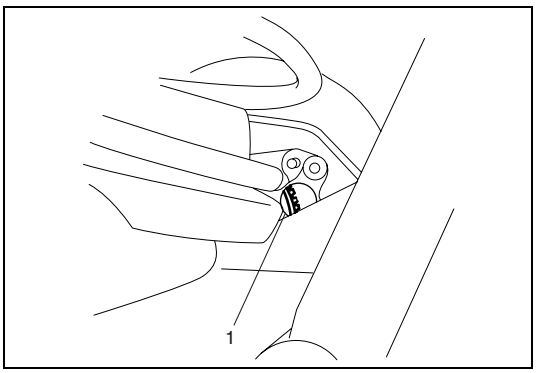

- Check that no foreign material is attached to sensor (1) and ring.

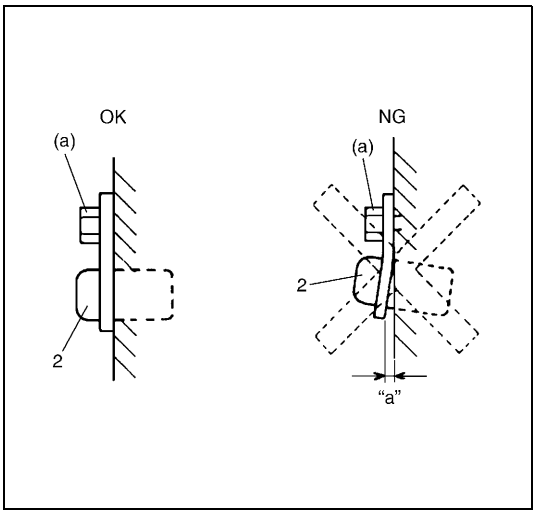

- Be sure to install wheel speed sensor and its bolt at the correct (upper) position as shown in figure.
  Tighten sensor bolt to specified torque.

Tightening torque
Sensor bolt (a) : 10 N·m (1.0 kg-m, 7.5 lb-ft)

CAUTION:
Do not pull or twist wire harness more than necessary when installing rear wheel speed sensor.

- Check that there is no clearance between sensor and rear axle shaft.

REAR WHEEL SPEED SENSOR RING (FOR 2WD VEHICLE)

REMOVAL

1) Remove rear wheel sensor from rear axle housing.
2) Remove brake drum referring to Section 5.

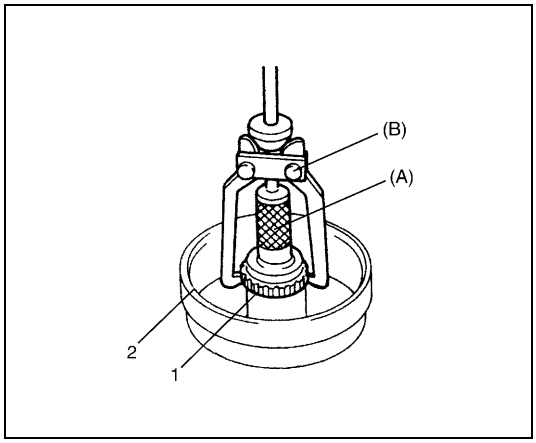

3) Remove sensor ring (1) from brake drum (2) using special tools.

Special tool
(A) : 09913-75520
(B) : 09913-65135

CAUTION:
Pull out sensor ring from brake drum gradually and evenly. Attempt to pull it out partially may cause it to be deformed.

INSTALLATION

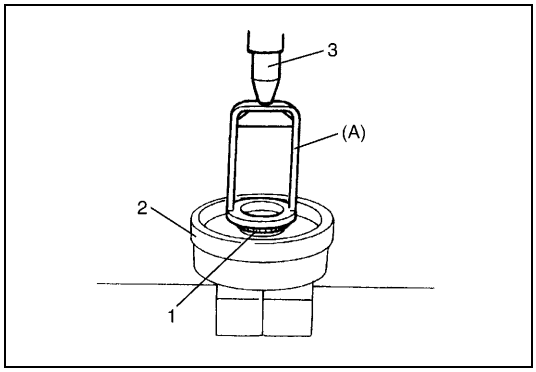

NOTE:
Do not reuse (reinstall) removed sensor ring.

1) Install new sensor ring (1) to brake drum (2) using special tool and hydraulic press (3).

Special tool
(A) : 09913-75840

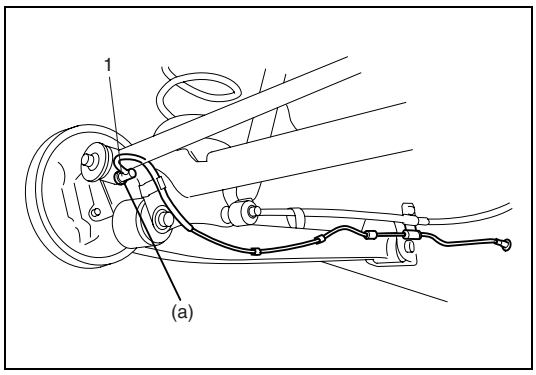

2) Install brake drum. Refer to Section 5.
3) Install rear wheel speed sensor (1) to rear axle housing.

Tightening torque
Rear wheel speed sensor (a) : 10 N·m (1.0 kg-m, 7.5 lb-ft)

REAR WHEEL SPEED SENSOR RING (FOR 4WD VEHICLE)

REMOVAL

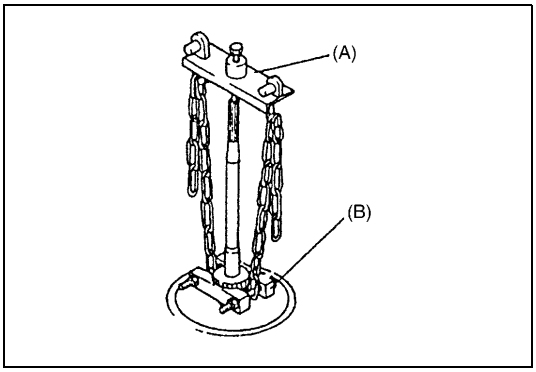

1) Remove rear axle shaft referring to Section 3E.
2) Remove rear wheel sensor ring from axle shaft by using special tools.

Special tool
(A) : 09927-18411
(B) : 09921-57810

INSTALLATION

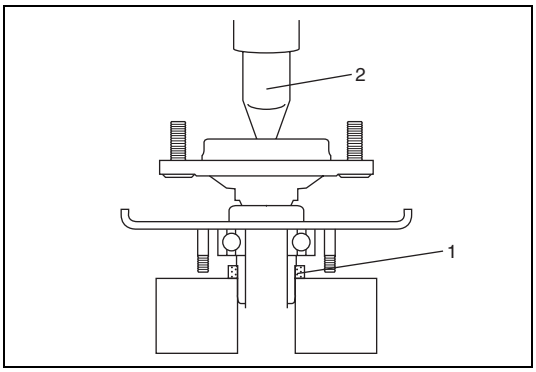

NOTE:

- **Do not reuse (reinstall) removed sensor ring.**
- **Do not damage to retainer ring when press fitting wheel sensor ring.**

1) Install new wheel sensor ring (1) by using hydraulic press (2).
2) Install rear axle shaft referring to Section 3E.
3) Install wheel speed sensor to rear axle housing.

Tightening torque
Wheel sensor ring bolt : 10 N·m (1.0 kg-m, 7.5 lb-ft)

G SENSOR (FOR 4WD VEHICLE ONLY)

REMOVAL

1) Turn ignition switch OFF and disconnect battery negative cable.
2) Remove ABS fuse from fuse box.
3) Disconnect ABS hydraulic unit/control module assembly connector by pulling up lock.
4) Remove center console box.
5) Remove G sensor (1) from floor.
6) Disconnect connector from sensor.

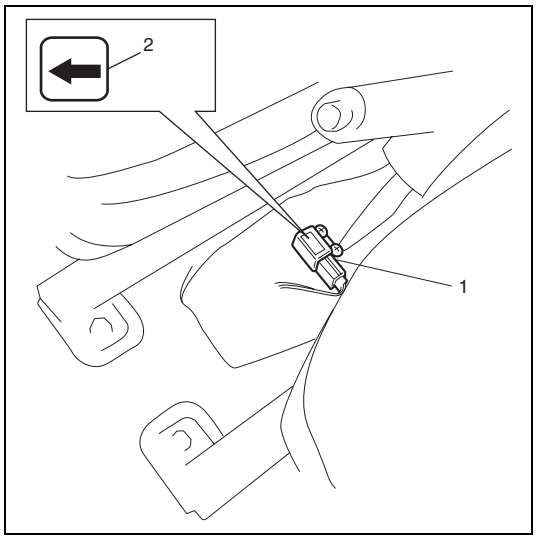

CAUTION:
Sensor must not be dropped or shocked. It will affect its original performance.

2. Label

INSPECTION

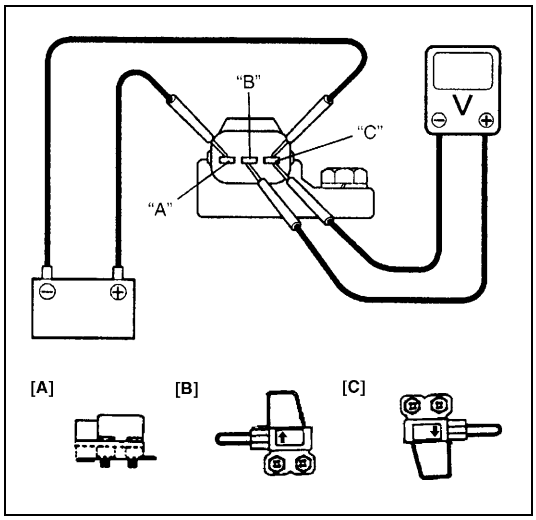

Connect positive cable of 12 volt battery to "A" terminal of sensor and ground cable to "C" terminal. Then using voltmeter, check voltage between "B" terminal and "C" terminal.

G sensor specification
When placed horizontally : 2 – 3 V
When placed upright with arrow upward : 3 – 4 V
When placed upright with arrow downward : 1 – 2 V

If measured voltage is not as specified, replace sensor.

[A] :	Horizontal
[B] :	Upright with arrow upward
[C] :	Upright with arrow downward

INSTALLATION

1) Connect connector to sensor securely.
2) Install sensor onto floor so that arrow mark directs vehicle forward.
3) Connect ABS hydraulic unit/control module assembly connector.
4) Install ABS fuse to fuse box.
5) Install rear console box.

SPECIAL TOOL

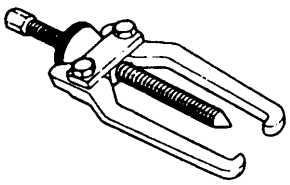 09913-65135 Bearing puller	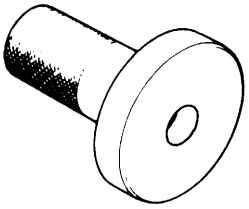 09913-75520 Bearing installing tool	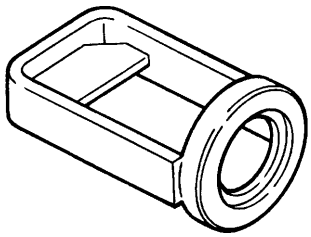 09913-75840 Sensor ring installer	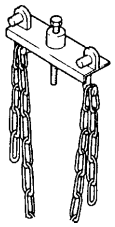 09927-18411 Universal puller
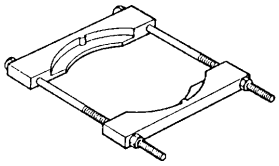 09921-57810 Countershaft holder	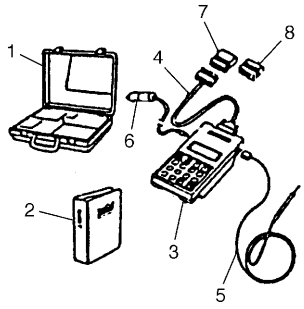 09931-76011 Tech 1A kit (See NOTE below.)	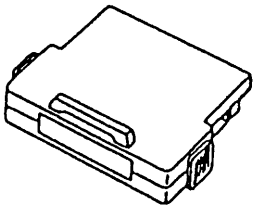 Mass storage cartridge	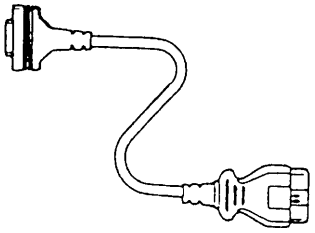 09931-76030 16/14 pin DLC cable
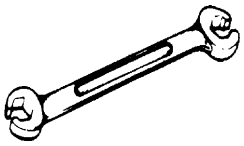 09950-78220 Flare nut wrench (10 mm)			

NOTE:

This kit includes the following items.

1. Storage case, 2. Operator's manual, 3. Tech 1A, 4. DLC cable, 5. Test lead/probe, 6. Power source cable, 7. DLC cable adaptor, 8. Self-test adaptor

SECTION 6

ENGINE GENERAL INFORMATION AND DIAGNOSIS

WARNING:

For vehicles equipped with Supplemental Restraint (Air Bag) System :

- **Service on and around the air bag system components or wiring must be performed only by an authorized SUZUKI dealer. Refer to "Air Bag System Components and Wiring Location View" under "General Description" in air bag system section in order to confirm whether you are performing service on or near the air bag system components or wiring. Please observe all WARNINGS and "Service Precautions" under "On-Vehicle Service" in air bag system section before performing service on or around the air bag system components or wiring. Failure to follow WARNINGS could result in unintentional activation of the system or could render the system inoperative. Either of these two conditions may result in severe injury.**
- **Technical service work must be started at least 90 seconds after the ignition switch is turned to the "LOCK" position and the negative cable is disconnected from the battery. Otherwise, the system may be activated by reserve energy in the Sensing and Diagnostic Module (SDM).**

ENGINE GENERAL INFORMATION AND ENGINE DIAGNOSIS..... Section 6
ENGINE MECHANICAL ..... Section 6A1
ENGINE COOLING..... Section 6B
ENGINE FUEL..... Section 6C
ENGINE AND EMISSION CONTROL SYSTEM ..... Section 6E1
IGNITION SYSTEM ..... Section 6F1
CRANKING SYSTEM..... Section 6G
CHARGING SYSTEM..... Section 6H
EXHAUST SYSTEM ..... Secton 6K

NOTE:

Whether the following systems (parts) are used in the particular vehicle or not depends on vehicle specifications. Be sure to bear this in mind when performing service work.

- **EGR valve**
- **Heated oxygen sensor(s) or CO adjusting resistor**
- **Three way catalytic converter**
- **Immobilizer indicator lamp (vehicle with immobilizer indicator lamp can be identified also by HO2S-2)**
- **Knock sensor**

CONTENTS

GENERAL INFORMATION 6-4
STATEMENT ON CLEANLINESS AND CARE 6-4
GENERAL INFORMATION ON ENGINE SERVICE 6-4
PRECAUTION ON FUEL SYSTEM SERVICE 6-5
FUEL PRESSURE RELIEF PROCEDURE 6-6
FUEL LEAKAGE CHECK PROCEDURE.... 6-6

ENGINE DIAGNOSIS 6-6
GENERAL DESCRIPTION 6-6
ON-BOARD DIAGNOSTIC SYSTEM (VEHICLE WITH IMMOBILIZER INDICATOR LAMP) 6-7
ON-BOARD DIAGNOSTIC SYSTEM (VEHICLE WITHOUT IMMOBILIZER INDICATOR LAMP) 6-10
PRECAUTION IN DIAGNOSING TROUBLE 6-11
ENGINE DIAGNOSTIC FLOW TABLE 6-12
CUSTOMER PROBLEM INSPECTION FORM (EXAMPLE) 6-14
MALFUNCTION INDICATOR LAMP (MIL) CHECK 6-15
DIAGNOSTIC TROUBLE CODE (DTC) CHECK 6-15
DIAGNOSTIC TROUBLE CODE (DTC) CLEARANCE 6-16
DIAGNOSTIC TROUBLE CODE (DTC) TABLE 6-17
FAIL-SAFE TABLE 6-20
VISUAL INSPECTION 6-22
ENGINE BASIC INSPECTION 6-23
ENGINE DIAGNOSIS TABLE 6-26
SCAN TOOL DATA 6-31
INSPECTION OF ECM AND ITS CIRCUITS 6-36
ECM VOLTAGE VALUES TABLE 6-37
TERMINAL RESISTANCE TABLE 6-43
COMPONENT LOCATION 6-45
TABLE A-1 MALFUNCTION INDICATOR LAMP CIRCUIT CHECK - LAMP DOES NOT COME “ON” AT IGNITION SWITCH ON (BUT ENGINE AT STOP) 6-46
TABLE A-2 MALFUNCTION INDICATOR LAMP CIRCUIT CHECK - LAMP REMAINS “ON” AFTER ENGINE STARTS 6-47
TABLE A-3 MIL CHECK - MIL FLASHES AT IGNITION SWITCH ON (VEHICLE WITHOUT IMMOBILIZER INDICATOR LAMP) 6-48
TABLE A-4 MIL CHECK - MIL DOES NOT FLASH OR JUST REMAINS ON EVEN WITH GROUNDING DIAGNOSIS SWITCH TERMINAL (VEHICLE WITHOUT IMMOBILIZER INDICATOR LAMP) 6-48
TABLE A-5 ECM POWER AND GROUND CIRCUIT CHECK - MIL DOESN’T LIGHT AT IGNITION SWITCH ON AND ENGINE DOESN’T START THOUGH IT IS CRANKED UP 6-49
DTC P0105 (DTC NO.11) MANIFOLD ABSOLUTE PRESSURE (MAP) CIRCUIT MALFUNCTION 6-52
DTC P0110 (DTC NO.18) INTAKE AIR TEMP. (IAT) CIRCUIT MALFUNCTION 6-55
DTC P0115 (DTC NO.19) ENGINE COOLANT TEMPERATURE (ECT) CIRCUIT MALFUNCTION 6-57
DTC P0120 (DTC NO.13) THROTTLE POSITION CIRCUIT MALFUNCTION 6-60
DTC P0121 THROTTLE POSITION CIRCUIT RANGE/PERFORMANCE PROBLEM 6-63
DTC P0130 (DTC NO.14) HEATED OXYGEN SENSOR (HO2S) CIRCUIT MALFUNCTION (SENSOR-1) 6-66
DTC P0133 HEATED OXYGEN SENSOR (HO2S) CIRCUIT SLOW RESPONSE (SENSOR-1) 6-68
DTC P0134 HEATED OXYGEN SENSOR (HO2S) CIRCUIT NO ACTIVITY DETECTED (SENSOR-1) 6-69
DTC P0135 (DTC NO.14) HEATED OXYGEN SENSOR (HO2S) HEATER CIRCUIT MALFUNCTION (SENSOR-1) 6-70
DTC P0136 HEATED OXYGEN SENSOR (HO2S) CIRCUIT MALFUNCTION (SENSOR-2) 6-72
DTC P0141 HEATED OXYGEN SENSOR (HO2S) HEATER CIRCUIT MALFUNCTION (SENSOR-2) 6-74
DTC P0171 FUEL SYSTEM TOO LEAN 6-76
DTC P0172 FUEL SYSTEM TOO RICH 6-76
DTC P0300 RANDOM MISFIRE DETECTED (MISFIRE DETECTED AT 2 OR MORE CYLINDERS) 6-81
DTC P0301 CYLINDER 1 MISFIRE DETECTED 6-81
DTC P0302 CYLINDER 2 MISFIRE DETECTED 6-81
DTC P0303 CYLINDER 3 MISFIRE DETECTED 6-81
DTC P0304 CYLINDER 4 MISFIRE DETECTED 6-81
DTC P0325 (DTC NO.17) KNOCK SENSOR CIRCUIT MALFUNCTION 6-86
DTC P0335 (DTC NO.23) CRANKSHAFT POSITION (CKP) SENSOR CIRCUIT MALFUNCTION 6-88
DTC P0340 (DTC NO.15) CAMSHAFT POSITION (CMP) SENSOR CIRCUIT MALFUNCTION 6-91
DTC P0400 EXHAUST GAS RECIRCULATION FLOW MALFUNCTION 6-94
DTC P0420 CATALYST SYSTEM EFFICIENCY BELOW THRESHOLD 6-97
DTC P0443 PURGE CONTROL VALVE CIRCUIT MALFUNCTION 6-100
DTC P0480 RADIATOR COOLING FAN CONTROL SYSTEM MALFUNCTION 6-101
DTC P0500 (DTC NO.16) VEHICLE SPEED SENSOR (VSS) MALFUNCTION 6-103
DTC P0505 (DTC NO.26) IDLE CONTROL SYSTEM MALFUNCTION 6-105
DTC P1450 BAROMETRIC PRESSURE SENSOR LOW/HIGH INPUT 6-108
DTC P1451 BAROMETRIC PRESSURE SENSOR PERFORMANCE PROBLEM 6-108

DTC P1500 ENGINE STARTER SIGNAL CIRCUIT MALFUNCTION 6-110
DTC P1510 ECM BACK-UP POWER SUPPLY MALFUNCTION 6-111
DTC P1600 SERIAL COMMUNICATION PROBLEM BETWEEN ECM AND TCM 6-112
DTC P1717 A/T DRIVE RANGE (PARK/ NEUTRAL POSITION) SIGNAL CIRCUIT MALFUNCTION 6-114
TABLE B-1 FUEL INJECTOR CIRCUIT CHECK 6-117
TABLE B-2 FUEL PUMP AND ITS CIRCUIT CHECK 6-118
TABLE B-3 FUEL PRESSURE CHECK 6-120
TABLE B-4 IDLE AIR CONTROL SYSTEM CHECK 6-122
TABLE B-5 A/C SIGNAL CIRCUITS CHECK (VEHICLE WITH A/C) 6-124
TABLE B-6 ELECTRIC LOAD SIGNAL CIRCUIT CHECK 6-126
TABLE B-7 RADIATOR FAN CONTROL SYSTEM CHECK 6-128
SPECIAL TOOL 6-130

GENERAL INFORMATION

STATEMENT ON CLEANLINESS AND CARE

An automobile engine is a combination of many machined, honed, polished and lapped surfaces with tolerances that are measured in the thousands of an millimeter (ten thousands of an inch).
Accordingly, when any internal engine parts are serviced, care and cleanliness are important.
Throughout this section, it should be understood that proper cleaning and protection of machined surfaces and friction areas is part of the repair procedure. This is considered standard shop practice even if not specifically stated.

- A liberal coating of engine oil should be applied to friction areas during assembly to protect and lubricate the surfaces on initial operation.
- Whenever valve train components, pistons, piston rings, connecting rods, rod bearings, and crankshaft journal bearings are removed for service, they should be retained in order.
  At the time of installation, they should be installed in the same locations and with the same mating surfaces as when removed.
- Battery cables should be disconnected before any major work is performed on the engine.
  Failure to disconnect cables may result in damage to wire harness or other electrical parts.

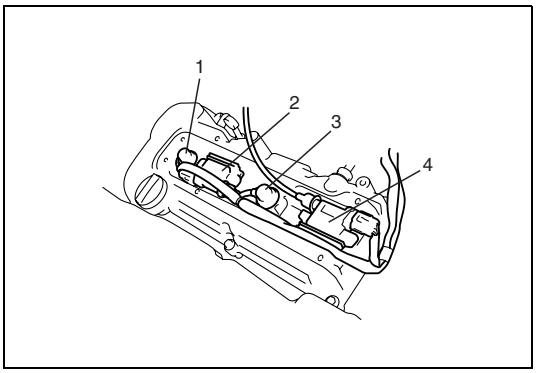

- Throughout this manual, the four cylinders of the engine are identified by numbers; No.1 (1), No.2 (2), No.3 (3) and No.4 (4) counted from crankshaft pulley side to flywheel side.

GENERAL INFORMATION ON ENGINE SERVICE

THE FOLLOWING INFORMATION ON ENGINE SERVICE SHOULD BE NOTED CAREFULLY, AS IT IS IMPORTANT IN PREVENTING DAMAGE, AND IN CONTRIBUTING TO RELIABLE ENGINE PERFORMANCE.

- When raising or supporting engine for any reason, do not use a jack under oil pan. Due to small clearance between oil pan and oil pump strainer, jacking against oil pan may cause it to be bent against strainer resulting in damaged oil pick-up unit.
- It should be kept in mind, while working on engine, that 12-volt electrical system is capable of violent and damaging short circuits.
  When performing any work where electrical terminals can be grounded, ground cable of the battery should be disconnected at battery.
- Any time the air cleaner, throttle body or intake manifold is removed, the intake opening should be covered. This will protect against accidental entrance of foreign material which could follow intake passage into cylinder and cause extensive damage when engine is started.

PRECAUTION ON FUEL SYSTEM SERVICE

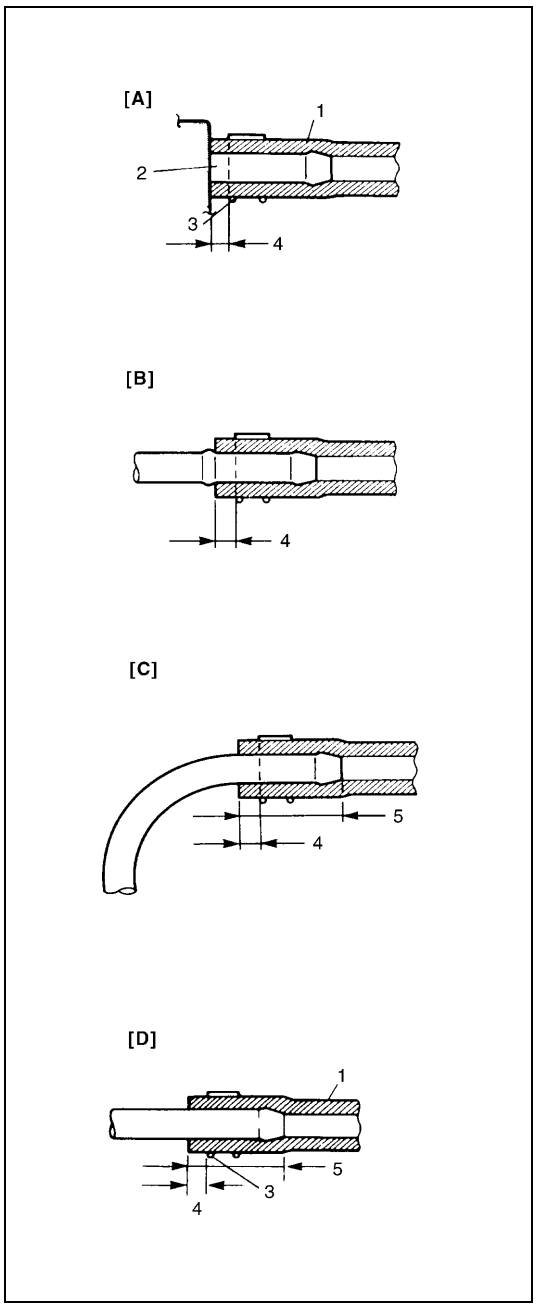

- Work must be done with no smoking, in a well-ventilated area and away from any open flames.
- As fuel feed line (between fuel pump and fuel delivery pipe) is still under high fuel pressure even after engine was stopped, loosening or disconnecting fuel feed line directly may cause dangerous spout of fuel to occur where loosened or disconnected.
  Before loosening or disconnecting fuel feed line, make sure to release fuel pressure according to “FUEL PRESSURE RELIEF PROCEDURE”. A small amount of fuel may be released after the fuel line is disconnected. In order to reduce the chance of personal injury, cover the fitting to be disconnected with a shop cloth. Put that cloth in an approved container when disconnection is completed.
- Never run engine with fuel pump relay disconnected when engine and exhaust system are hot.
- Fuel or fuel vapor hose connection varies with each type of pipe. When reconnecting fuel or fuel vapor hose, be sure to connect and clamp each hose correctly referring to figure Hose Connection.
  After connecting, make sure that it has no twist or kink.
- When installing injector or fuel delivery pipe, lubricate its O-ring with spindle oil or gasoline.
- When connecting fuel pipe flare nut, first tighten flare nut by hand and then tighten it to specified torque.

[A] :	With short pipe, fit hose as far as it reaches pipe joint as shown.
[B] :	With following type pipe, fit hose as far as its peripheral projection as shown.
[C] :	With bent pipe, fit hose as its bent part as shown or till pipe is about 20 to 30 mm (0.79–1.18 in.) into the hose.
[D] :	With straight pipe, fit hose till pipe is, about 20 to 30 mm (0.79–1.18 in.) into the hose.
1.	Hose
2.	Pipe
3.	Clamp
4.	Clamp securely at a position 3 to 7 mm (0.1 2–0.27 in.) from hose end.
5.	20 to 30 mm (0.79–1.18 in.)

FUEL PRESSURE RELIEF PROCEDURE

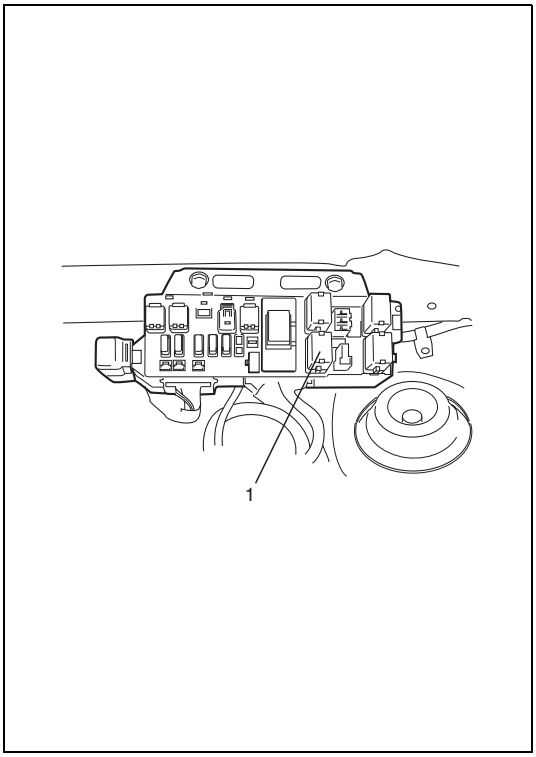

CAUTION:
This work must not be done when engine is hot. If done so, it may cause adverse effect to catalyst.

After making sure that engine is cold, release fuel pressure as follows.

1) Place transmission gear shift lever in “Neutral” (Shift selector lever to “P” range for A/T model), set parking brake, and block drive wheels.
2) Remove relay box cover.
3) Disconnect fuel pump relay (1) from relay box.
4) Remove fuel filler cap to release fuel vapor pressure in fuel tank and then reinstall it.
5) Start engine and run it till it stops for lack of fuel. Repeat cranking engine 2-3 times for about 3 seconds each time to dissipate fuel pressure in lines. Fuel connections are now safe for servicing.
6) Upon completion of servicing, connect fuel pump relay (1) to relay box and install relay box cover.

FUEL LEAKAGE CHECK PROCEDURE

After performing any service on fuel system, check to make sure that there are no fuel leakages as follows.

1) Turn ON ignition switch for 3 seconds (to operate fuel pump) and then turn it OFF.
   Repeat this (ON and OFF) 3 or 4 times and apply fuel pressure to fuel line. (till fuel pressure is felt by hand placed on fuel feed hose.)
2) In this state, check to see that there are no fuel leakages from any part of fuel system.

ENGINE DIAGNOSIS

GENERAL DESCRIPTION

This vehicle is equipped with an engine and emission control system which are under control of ECM.
The engine and emission control system in this vehicle are controlled by ECM. ECM has an On-Board Diagnostic system which detects a malfunction in this system and abnormality of those parts that influence the engine exhaust emission. When diagnosing engine troubles, be sure to have full understanding of the outline of “On-Board Diagnostic System” and each item in “Precaution in Diagnosing Trouble” and execute diagnosis according to “ENGINE DIAGNOSTIC FLOW TABLE”.
There is a close relationship between the engine mechanical, engine cooling system, ignition system, exhaust system, etc. and the engine and emission control system in their structure and operation. In case of an engine trouble, even when the malfunction indicator lamp (MIL) doesn’t turn ON, it should be diagnosed according to this flow table.

ON-BOARD DIAGNOSTIC SYSTEM (VEHICLE WITH IMMOBILIZER INDICATOR LAMP)

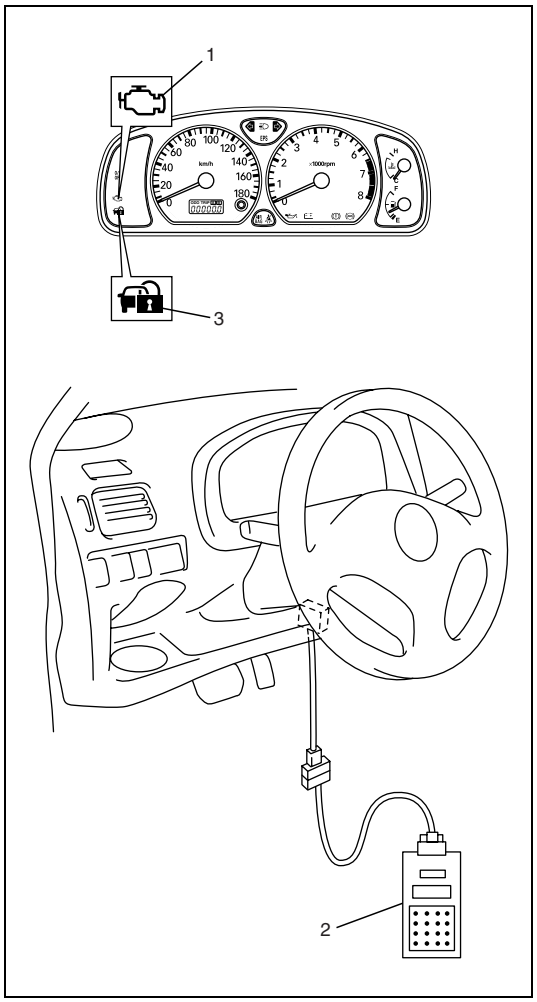

ECM in this vehicle has following functions.

- When the ignition switch is turned ON with the engine at a stop, malfunction indicator lamp (MIL) (1) turns ON to check the bulb of the malfunction indicator lamp (1).
- When ECM detects a malfunction which gives an adverse effect to vehicle emission while the engine is running, it makes the malfunction indicator lamp (1) in the meter cluster of the instrument panel turn ON or flash (flashing only when detecting a misfire which can cause damage to the catalyst) and stores the malfunction area in its memory.
  (If it detects that continuously 3 driving cycles are normal after detecting a malfunction, however, it makes MIL (1) turn OFF although DTC stored in its memory will remain.)
- As a condition for detecting a malfunction in some areas in the system being monitored by ECM and turning ON the malfunction indicator lamp (1) due to that malfunction, 2 driving cycle detection logic is adopted to prevent erroneous detection.
- When a malfunction is detected, engine and driving conditions then are stored in ECM memory as freeze frame data. (For the details, refer to description on Freeze frame data.)
- It is possible to communicate by using not only SUZUKI scan tool (Tech-1) (2) but also generic scan tool. (Diagnostic information can be accessed by using a scan tool.)

3. Immobilizer indicator lamp

WARM-UP CYCLE

A warm-up cycle means sufficient vehicle operation such that the coolant temperature has risen by at least 22°C (40°F) from engine starting and reaches a minimum temperature of 70°C (160°F).

DRIVING CYCLE

A “Driving Cycle” consists of engine startup, driving mode where a malfunction would be detected if present, and engine shutoff.

2 DRIVING CYCLES DETECTION LOGIC

The malfunction detected in the first driving cycle is stored in ECM memory (in the form of pending DTC and freeze frame data) but the malfunction indicator lamp does not light at this time. It lights up at the second detection of same malfunction also in the next driving cycle.

PENDING DTC

Pending DTC means a DTC detected and stored temporarily at the first driving cycle of the DTC which is detected in the 2 driving cycle detection logic.

FREEZE FRAME DATA

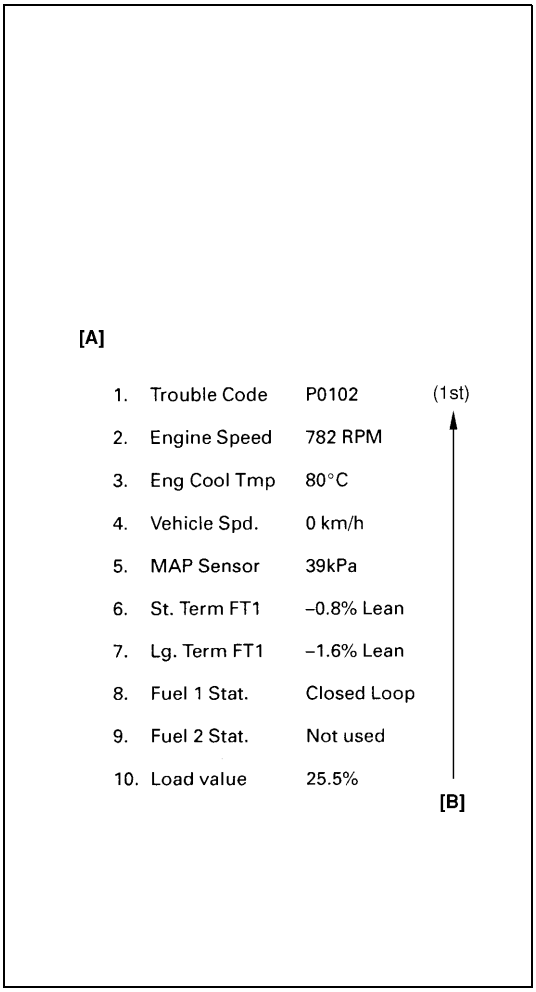
[A]
1. Trouble Code P0102
2. Engine Speed 782 RPM
3. Eng Cool Tmp 80°C
4. Vehicle Spd. 0 km/h
5. MAP Sensor 39kPa
6. St. Term FT1 –0.8% Lean
7. Lg. Term FT1 –1.6% Lean
8. Fuel 1 Stat. Closed Loop
9. Fuel 2 Stat. Not used
10. Load value 25.5%
(1st)
[B]

ECM stores the engine and driving conditions (in the from of data as shown in the figure) at the moment of the detection of a malfunction in its memory. This data is called “Freeze frame data”. Therefore, it is possible to know engine and driving conditions (e.g., whether the engine was warm or not, whether the vehicle was running or stopped, whether air/fuel mixture was lean or rich) when a malfunction was detected by checking the freeze frame data. Also, ECM has a function to store each freeze frame data for three different malfunctions in the order as the malfunction is detected. Utilizing this function, it is possible to know the order of malfunctions that have been detected. Its use is helpful when rechecking or diagnosing a trouble.

Priority of freeze frame data :

ECM has 4 frames where the freeze frame data can be stored. The first frame stores the freeze frame data of the malfunction which was detected first. However, the freeze frame data stored in this frame is updated according to the priority described below. (If malfunction as described in the upper square “1” below is detected while the freeze frame data in the lower square “2” has been stored, the freeze frame data “2” will be updated by the freeze frame data “1”.)

[A] : An Example of Freeze Frame Data
[B] : 1st, 2nd or 3rd in parentheses here represents which position in the order the malfunction is detected.

PRIORITY	FREEZE FRAME DATA IN FRAME 1
1	Freeze frame data at initial detection of malfunction among misfire detected (P0300-P0304), fuel system too lean (P0171) and fuel system too rich (P0172)
2	Freeze frame data when a malfunction other than those in “1” above is detected

In the 2nd through the 4th frames, the freeze frame data of each malfunction is stored in the order as the malfunction is detected. These data are not updated.
Shown in the table below are examples of how freeze frame data are stored when two or more malfunctions are detected.

			FRAME			
			FRAME 1	FRAME 2	FRAME 3	FRAME4
			FREEZE FRAME DATA to be updated	1st FREEZE FRAME DATA	2nd FREEZE FRAME DATA	3rd FREEZE FRAME DATA
MALFUNCTION DETECTED ORDER		No malfunction	No freeze frame data			
	1	P0400 (EGR) detected	Data at P0400 detection	Data at P0400 detection	–	–
	2	P0171 (Fuel system) detected	Data at P0171 detection	Data at P0400 detection	Data at P0171 detection	–
	3	P0300 (Misfire) detected	Data at P0171 detection	Data at P0400 detection	Data at P0171 detection	Data at P0300 detection
	4	P0301 (Misfire) detected	Data at P0171 detection	Data at P0400 detection	Data at P0171 detection	Data at P0300 detection

Freeze Frame Data Clearance :

The freeze frame data is cleared at the same time as clearance of diagnostic trouble code (DTC).

DATA LINK CONNECTOR (DLC)

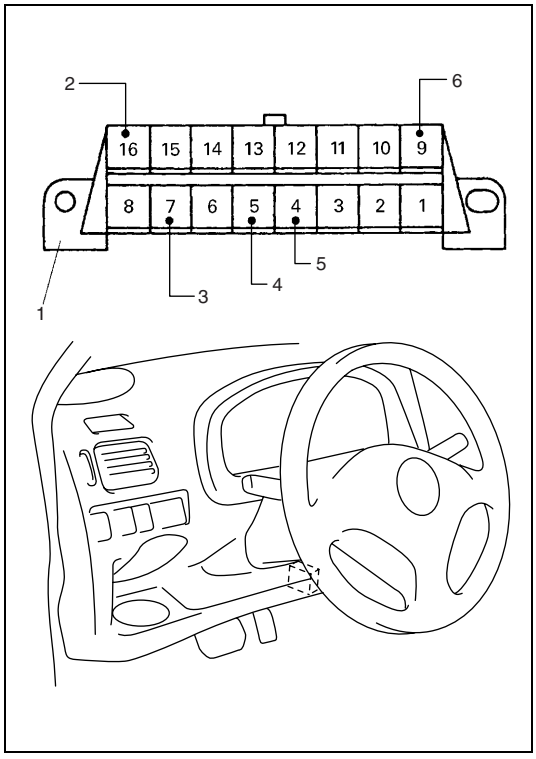

DLC (1) is in compliance with SAEJ1962 in its installation position, the shape of connector and pin assignment.

Serial data line (K line of ISO 9141) is used for SUZUKI scan tool (Tech-1) or generic scan tool to communicate with ECM, TCM, ABS control module and Air bag SDM.
SUZUKI serial data line is used for SUZUKI scan tool (Tech -1) to communicate with immobilizer control module.

2. B+
3. Serial data line (K line of ISO 9141)
4. ECM ground
5. Body ground
6. SUZUKI serial data line

ON-BOARD DIAGNOSTIC SYSTEM (VEHICLE WITHOUT IMMOBILIZER INDICATOR LAMP)

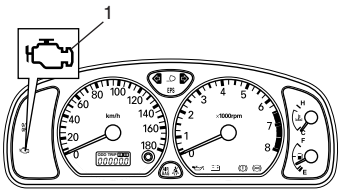

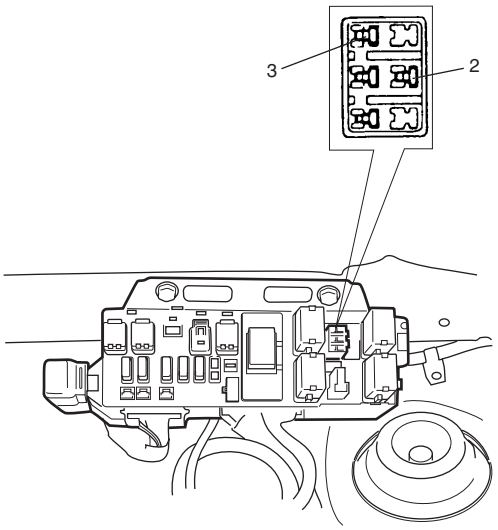

ECM diagnosis troubles which may occur in the area including the following parts when the ignition switch is ON and the engine is running, and indicates the result by turning on or flashing malfunction indicator lamp (1).

- Heated oxygen sensor (if equipped)
- ECT sensor
- TP sensor
- IAT sensor
- MAP sensor
- CMP sensor
- CKP sensor
- Knock sensor (if equipped)
- VSS
- CPU (Central Processing Unit) of ECM

ECM and malfunction indicator lamp (1) operate as follows.

- Malfunction indicator lamp (1) lights when the ignition switch is turned ON (but the engine at stop) with the diagnosis switch terminal ungrounded regardless of the condition of Engine and Emission control system. This is only to check the malfunction indicator lamp (1) bulb and its circuit.
- If the above areas of Engine and Emission control system are free from any trouble after the engine start (while engine is running), malfunction indicator lamp (1) turns OFF.
- When ECM detects a trouble which has occurred in the above areas, it makes malfunction indicator lamp (1) turn ON while the engine is running to warn the driver of such occurrence of trouble and at the same time it stores the trouble area in ECM back-up memory. (The memory is kept as it is even if the trouble was only temporary and disappeared immediately. And it is not erased unless the power to ECM is shut off for specified time below.)
  ECM also indicates trouble area in memory by means of flashing of malfunction indicator lamp (1) at the time of inspection. (i.e. when diagnosis switch terminal (2) is connected to ground terminal (3) with a service wire and ignition switch is turned ON.)

NOTE:

- **When a trouble occurs in the above areas and disappears soon while the diagnosis switch terminal is ungrounded and the engine is running, malfunction indicator lamp (1) lights and remains ON as long as the trouble exists but it turns OFF when the normal condition is restored.**
- **Time required to erase diagnostic trouble code memory thoroughly varies depending on ambient temperature as follows.**

AMBIENT TEMPERATURE	TIME TO CUT POWER TO ECM
Over 0°C (32°F)	60 sec. or longer
Under 0°C (32°F)	Not specifiable. Select a place with temperature higher than 0°C (32°F).

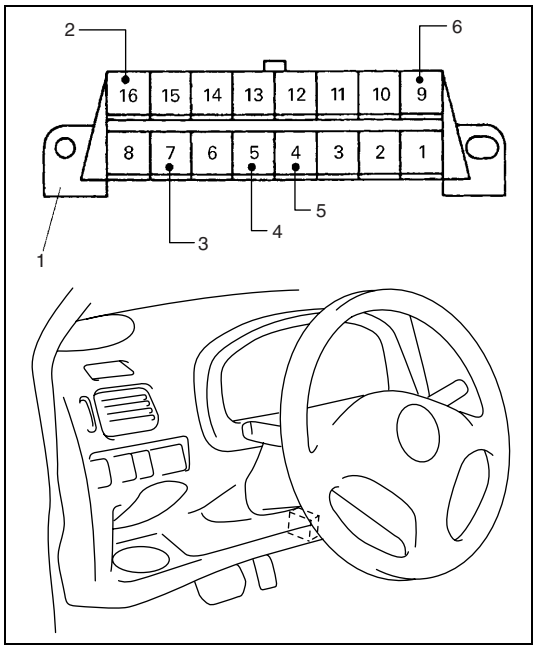

DATA LINK CONNECTOR (DLC)

ELC (1) is in compliance with SAEJ1962 in its installation position, the shape of connector and pin assignment.

Serial data line (K line of ISO 9141) is used for SUZUKI scan tool (Tech-1) to communicate with ECM, TCM, ABS control module and Air bag SDM.
SUZUKI serial data line is used for SUZUKI scan tool (Tech -1) to communicate with immobilizer control module.

2. B+
3. Serial data line (K line of ISO 9141)
4. ECM ground
5. Body ground
6. SUZUKI serial data line

PRECAUTION IN DIAGNOSING TROUBLE

- Do not disconnect couplers from ECM, battery cable from battery, ECM ground wire harness from engine or main fuse before confirming diagnostic information (DTC, freeze frame data, etc.) stored in ECM memory. Such disconnection will erase memorized information in ECM memory.
- Diagnostic information stored in ECM memory can be cleared as well as checked by using SUZUKI scan tool (Tech-1) or generic scan tool (Vehicle with immobilizer indicator lamp). Before using scan tool, read its Operator's (Instruction) Manual carefully to have good understanding as to what functions are available and how to use it.
- Priorities for diagnosing troubles (Vehicle with immobilizer indicator lamp).
  If two or more DTCs are stored, proceed to the flow table of the DTC which has detected earliest in the order (it can be identified by referring to freeze frame data) and follow the instruction in that table.
  If no instructions are given, troubleshoot diagnostic trouble codes according to the following priorities.
  – Diagnostic trouble codes (DTCs) other than DTC P0171/P0172 (Fuel system too lean/too rich), DTC P0300/P0301/P0302/P0303/P0304 (Misfire detected) and DTC P0400 (EGR flow malfunction)
  – DTC P0171/P0172 (Fuel system too lean/too rich) and DTC P0400 (EGR flow malfunction)
  – DTC P0300/P0301/P0302/P0303/P0304 (Misfire detected)
- Be sure to read "Precautions for Electrical Circuit Service" in Section 0A before inspection and observe what is written there.
- ECM Replacement
  When substituting a known-good ECM, check for following conditions. Neglecting this check may cause damage to a known-good ECM.
  – Resistance value of all relays, actuators is as specified respectively.
  – MAP sensor and TP sensor are in good condition and none of power circuits of these sensors is shorted to ground.

ENGINE DIAGNOSTIC FLOW TABLE

Refer to the following pages for the details of each step.

Step	Action	Yes	No
1	Customer Complaint Analysis 1) Perform customer complaint analysis referring to the followings. Was customer complaint analysis performed?	Go to Step 2.	Perform customer complaint analysis.
2	DTC and Freeze Frame Data Check, Record and Clearance 1) Check for DTC (including pending DTC) referring to the followings. Is there any DTC(s)?	Print DTC and freeze frame data or write them down and clear them by referring to “DTC Clearance” section. Go to Step 3.	Go to Step 4.
3	Visual Inspection 1) Perform visual inspection referring to the followings. Is there any faulty condition?	Repair or replace malfunction part. Go to Step 11.	Go to Step 5.
4	Visual Inspection 1) Perform visual inspection referring to the followings. Is there any faulty condition?		Go to Step 8.
5	Trouble Symptom Confirmation 1) Confirm trouble symptom referring to the followings. Is trouble symptom identified?	Go to Step 6.	Go to Step 7.
6	Rechecking and Record of DTC/Freeze Frame Data 1) Recheck for DTC and freeze frame data referring to “DTC Check” section. Is there any DTC(s)?	Go to Step 9.	Go to Step 8.
7	Rechecking and Record of DTC/Freeze Frame Data 1) Recheck for DTC and freeze frame data referring to “DTC Check” section. Is there any DTC(s)?		Go to Step 10.
8	Engine Basic Inspection and Engine Diagnosis Table 1) Check and repair according to “Engine Basic Check” and “Engine Diagnosis Table” section. Are check and repair complete?	Go to Step 11.	Check and repair malfunction part(s). Go to Step 11.
9	Trouble shooting for DTC 1) Check and repair according to applicable DTC diag. flow table. Are check and repair complete?		
10	Check for Intermittent Problems 1) Check for intermittent problems by referring to the followings. Is there any faulty condition?	Repair or replace malfunction part(s). Go to Step 11.	Go to Step 11.
11	Final Confirmation Test 1) Clear DTC if any. 2) Perform final confirmation test by referring to the followings. Is there any problem symptom, DTC or abnormal condition?	Go to Step 6.	End.

1. CUSTOMER COMPLAINT ANALYSIS

Record details of the problem (failure, complaint) and how it occurred as described by the customer. For this purpose, use of such an inspection form will facilitate collecting information to the point required for proper analysis and diagnosis.

2. DTC/FREEZE FRAME DATA CHECK, RECORD AND CLEARANCE

First, check DTC (including pending DTC), referring to “DTC check” section. If DTC is indicated, print it and freeze frame data or write them down and then clear them by referring to “DTC clearance” section. DTC indicates malfunction that occurred in the system but does not indicate whether it exists now or it occurred in the past and the normal condition has been restored now. To check which case applies, check the symptom in question according to Step 4 and recheck DTC according to Step 5.
Attempt to diagnose a trouble based on DTC in this step only or failure to clear the DTC in this step will lead to incorrect diagnosis, trouble diagnosis of a normal circuit or difficulty in troubleshooting.

NOTE:

If only Automatic transmission DTCs (P0702-P1709) or Immobilizer DTCs (P1620-P1623) are indicated in this step, perform trouble diagnosis according to “Diagnosis” in Section 7B or Section 8G.

3. and 4. VISUAL INSPECTION

As a preliminary step, be sure to perform visual check of the items that support proper function of the engine referring to “Visual Inspection” section.

5. TROUBLE SYMPTOM CONFIRMATION

Based on information obtained in Step 1 Customer complaint analysis and Step 2 DTC/freeze frame data check, confirm trouble symptoms. Also, reconfirm DTC according to “DTC Confirmation Procedure” described in each DTC Diagnosis section.

6. and 7. RECHECKING AND RECORD OF DTC/FREEZE FRAME DATA

Refer to “DTC check” section for checking procedure.

8. ENGINE BASIC INSPECTION AND ENGINE DIAGNOSIS TABLE

Perform basic engine check according to the “Engine Basic Inspection Flow Table” first. When the end of the flow table has been reached, check the parts of the system suspected as a possible cause referring to ENGINE DIAGNOSIS TABLE and based on symptoms appearing on the vehicle (symptoms obtained through steps of customer complaint analysis, trouble symptom confirmation and/or basic engine check) and repair or replace faulty parts, if any.

9. TROUBLESHOOTING FOR DTC (See each DTC Diag. Flow Table)

Based on the DTC indicated in Step 5 and referring to the applicable DTC diag. flow table in this section, locate the cause of the trouble, namely in a sensor, switch, wire harness, connector, actuator, ECM or other part and repair or replace faulty parts.

10. CHECK FOR INTERMITTENT PROBLEM

Check parts where an intermittent trouble is easy to occur (e.g., wire harness, connector, etc.), referring to “INTERMITTENT AND POOR CONNECTION” in Section 0A and related circuit of DTC recorded in Step 2.

11. FINAL CONFIRMATION TEST

Confirm that the problem symptom has gone and the engine is free from any abnormal conditions. If what has been repaired is related to the DTC, clear the DTC once, perform DTC confirmation procedure and confirm that no DTC is indicated.

CUSTOMER PROBLEM INSPECTION FORM (EXAMPLE)

User name:	Model:	VIN:	
Date of issue:	Date Reg.	Date of problem:	Mileage:

PROBLEM SYMPTOMS	
☐ **Difficult Starting** ☐ No cranking ☐ No initial combustion ☐ No combustion ☐ Poor starting at (☐cold ☐warm ☐always) ☐ Other_____	☐ **Poor Driveability** ☐ Hesitation on acceleration ☐ Back fire/☐After fire ☐ Lack of power ☐ Surging ☐ abnormal knocking ☐ Other_____
☐ **Poor Idling** ☐ Poor fast idle ☐ Abnormal idling speed (☐High ☐Low) (r/min.) ☐ Unstable ☐ Hunting (r/min. to r/min.) ☐ Other_____	☐ **Engine Stall when** ☐ Immediately after start ☐ Accel. pedal is depressed ☐ Accel. pedal is released ☐ Load is applied ☐ A/C ☐Electric load ☐P/S ☐ Other_____ ☐ Other_____
☐ OTHERS:	

VEHICLE/ENVIRONMENTAL CONDITION WHEN PROBLEM OCCURS	
Environmental Condition	
Weather Temperature Frequency Road	☐Fair ☐Cloudy ☐Rain ☐Snow ☐Always ☐Other_____ ☐Hot ☐Warm ☐Cool ☐Cold (°F/ °C) ☐Always ☐Always ☐Sometimes (times/ day, month) ☐Only once ☐Under certain condition ☐Urban ☐Suburb ☐Highway ☐Mountainous (☐Uphill ☐Downhill) ☐Tarmacadam ☐Gravel ☐Other_____
Vehicle Condition	
Engine condition	☐Cold ☐Warming up phase ☐Warmed up ☐Always ☐Other at starting ☐Immediately after start ☐Racing without load ☐Engine speed (r/min)
Vehicle condition	During driving: ☐Constant speed ☐Accelerating ☐Decelerating ☐Right hand corner ☐Left hand corner ☐When shifting (Lever position) ☐At stop ☐Vehicle speed when problem occurs (km/h, Mile/h) ☐Other

Malfunction indicator lamp condition	☐Always ON ☐Sometimes ON ☐Always OFF ☐Good condition
Diagnostic trouble code	First check: ☐No code ☐Malfunction code ( )
	Second check: ☐No code ☐Malfunction code ( )

NOTE:

The above form is a standard sample. It should be modified according to conditions characteristic of each market.

MALFUNCTION INDICATOR LAMP (MIL) CHECK

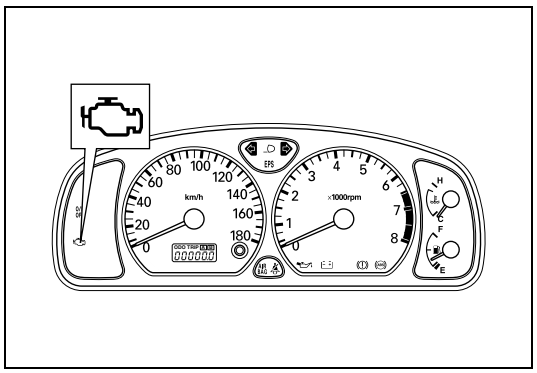

1) Turn ON ignition switch (but the engine at stop) and check that MIL lights.
   If MIL does not light up (or MIL dims), go to "Diagnostic Flow Table A-1" for troubleshooting.
   If MIL flushes, go to "Diagnostic Flow Table A-3" (vehicle without immobilizer indicator lamp).
2) Start engine and check that MIL turns OFF.
   If MIL remains ON and no DTC is stored in ECM, go to "Diagnostic Flow Table A-2" for troubleshooting.

DIAGNOSTIC TROUBLE CODE (DTC) CHECK

[Using SUZUKI Scan Tool]

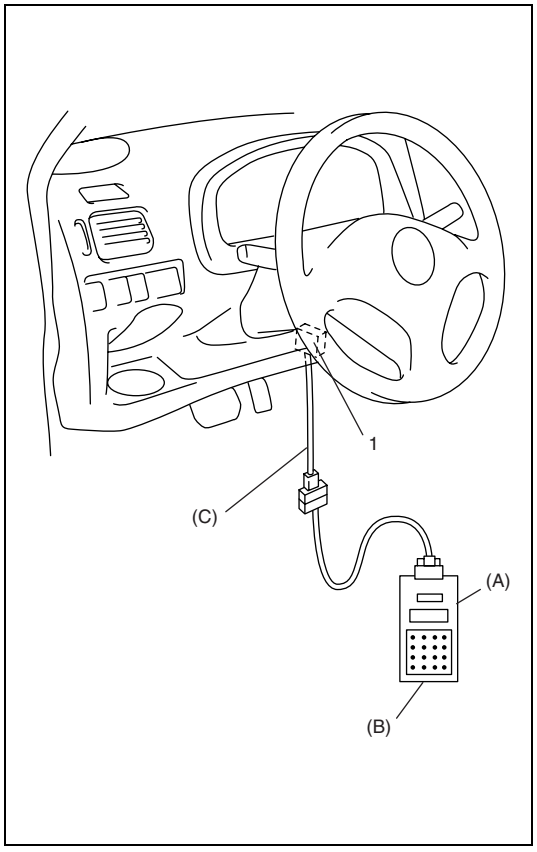

1) Prepare SUZUKI scan tool (Tech-1).
2) With ignition switch OFF, connect it to data link connector (DLC) (1) located on underside of instrument panel at driver's seat side.

Special tool
(A) : SUZUKI scan tool
(B) : Mass storage cartridge
(C) : 16/14 pin DLC cable

3) Turn ignition switch ON and confirm that MIL lights.
4) Read DTC, pending DTC and freeze frame data according to instructions displayed on scan tool and print it or write it down.
   Refer to scan tool operator's manual for further details.
   If communication between scan tool and ECM is not possible, check if scan tool is communicable by connecting it to ECM in another vehicle. If communication is possible in this case, scan tool is in good condition. Then check data link connector and serial data line (circuit) in the vehicle with which communication was not possible.
5) After completing the check, turn ignition switch off and disconnect scan tool from data link connector.

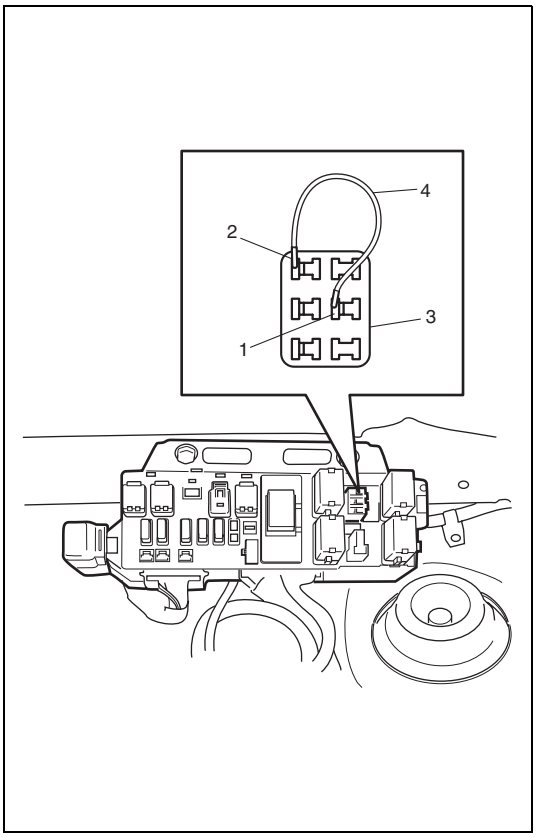

[Without Using SUZUKI Scan Tool] (Vehicle without Immobilizer Indicator Lamp)

1) Check malfunction indicator lamp referring to “Malfunction Indicator Lamp Check” in this section.
2) With the ignition switch OFF position, disconnect SUZUKI scan tool if connected and using service wire (4), connect diagnosis switch terminal (1) to ground terminal (2) in monitor coupler (3).
3) With the ignition switch ON position and leaving engine OFF, read DTC from flashing pattern of malfunction indicator lamp. Refer to “Diagnostic Trouble Code Table”.
   If lamp remains ON, go to “Diagnostic Flow Table A-4”.

NOTE:

- **If abnormality or malfunction lies in two or more areas, malfunction indicator lamp indicates applicable codes three times each.**
  And flashing of these codes is repeated as long as diagnosis terminal is grounded and ignition switch is held at ON position.
- **Take a note of diagnostic trouble code indicated first.**

4) After completing the check, turn the ignition switch OFF position and disconnect service wire from monitor coupler.

DIAGNOSTIC TROUBLE CODE (DTC) CLEARANCE

Using Scan Tool

1) Connect SUZUKI scan tool (Tech-1) or generic scan tool (Vehicle with immobilizer indicator lamp) to data link connector in the same manner as when making this connection for DTC check.
2) Turn ignition switch ON.
3) Erase DTC and pending DTC according to instructions displayed on scan tool. Refer to scan tool operator’s manual for further details.
4) After completing the clearance, turn ignition switch off and disconnect scan tool from data link connector.

NOTE:

DTC and freeze frame data stored in ECM memory are also cleared in following cases. Be careful not to clear them before keeping their record.

- **When power to ECM is cut off (by disconnecting battery cable, removing fuse or disconnecting ECM connectors)**
- **When the same malfunction (DTC) is not detected again during 40 engine warm-up cycles. (Vehicle with immobilizer indicator lamp)**

Without Using Scan Tool

1) Turn the ignition switch OFF position.
2) Disconnect battery negative cable for specified time below to erase diagnostic trouble code stored in ECM memory and reconnect it.

Time required to erase DTC :

Ambient temperature	Time to cut power to ECM
Over 0°C (32°F)	30 sec. or longer
Under 0°C (32°F)	Not specifiable. Select a place with higher than 0°C (32°F) temperature.

DIAGNOSTIC TROUBLE CODE (DTC) TABLE

DTC NO.	DETECTING ITEM	DETECTING CONDITION (DTC will set when detecting :)	MIL (vehicle with immobilizer indicator lamp)	MIL (vehicle without immobilizer indicator lamp)
P0105 (No.11)	Manifold absolute pressure circuit malfunction	Low pressure-high vacuum-low voltage (or MAP sensor circuit shorted to ground) High pressure-low vacuum-high voltage (or MAP sensor circuit open)	1 driving cycle	1 driving cycle
P0110 (No.18)	Intake air temp. circuit malfunction	Intake air temp. circuit low input Intake air temp. circuit high input	1 driving cycle	1 driving cycle
P0115 (No.19)	Engine coolant temp. circuit malfunction	Engine coolant temp. circuit low input Engine coolant temp. circuit high input	1 driving cycle	1 driving cycle
P0120 (No.13)	Throttle position circuit malfunction	Throttle position circuit low input Throttle position circuit high input	1 driving cycle	1 driving cycle
P0121	Throttle position circuit performance problem	Poor performance of TP sensor	2 driving cycles	Not applicable
P0130 (No.14)	HO2S circuit malfunction (Sensor-1)	Min. output voltage of HO2S-higher than specification Max. output voltage of HO2S-lower than specification	2 driving cycle	1 driving cycle
P0133	HO2S circuit slow response (Sensor-1)	Response time of HO2S-1 output voltage between rich and lean is longer than specification.	2 driving cycles	Not applicable
P0134	HO2S circuit no activity detected (Sensor-1)	Output voltage of HO2S-1 fails to go above specification (or HO2S-1 circuit shorted to ground).	2 driving cycles	1 driving cycle
P0135 (No.14)	HO2S heater circuit malfunction (Sensor-1)	Terminal voltage is lower than specification at heater OFF or it is higher at heater ON.	2 driving cycles	1 driving cycle
P0136	HO2S circuit malfunction (Sensor-2)	Max. voltage of HO2S-2 is lower than specification or its min. voltage is higher than specification	2 driving cycles	Not applicable

DTC NO.	DETECTING ITEM	DETECTING CONDITION (DTC will set when detecting :)	MIL (vehicle with immobilizer indicator lamp)	MIL (vehicle without immobilizer indicator lamp)
P0141	HO2S heater circuit malfunction (Sensor-2)	Terminal voltage is lower than specification at heater OFF or it is higher at heater ON. (or heater circuit or short)	2 driving cycles	Not applicable
P0171	Fuel system too lean	Short term fuel trim or total fuel trim (short and long terms added) is larger than specification for specified time or longer. (fuel trim toward rich side is large.)	2 driving cycles	Not applicable
P0172	Fuel system too rich	Short term fuel trim or total fuel trim (short and long term added) is smaller than specification for specified time or longer. (fuel trim toward lean side is large.)	2 driving cycles	Not applicable
P0300 Random misfire detected P0301 Cylinder 1 misfire detected P0302 Cylinder 2 misfire detected P0303 Cylinder 3 misfire detected P0304 Cylinder 4 misfire detected		Misfire of such level as to cause damage to three way catalyst	MIL flashing during misfire detection	Not applicable
		Misfire of such level as to deteriorate emission but not to cause damage to three way catalyst	2 driving cycles	Not applicable
P0325 (No.17)	Knock sensor circuit malfunction	Knock sensor circuit low input Knock sensor circuit high input	1 driving cycle	1 driving cycle
P0335 (No.23)	Crankshaft position sensor circuit malfunction	No signal for 2 sec. during engine cranking	1 driving cycle	1 driving cycle
P0340 (No.15)	Camshaft position sensor circuit malfunction	No signal during engine running	1 driving cycle	1 driving cycle
P0400	Exhaust gas recirculation flow malfunction detected	Excessive or insufficient EGR flow	2 driving cycles	Not applicable
P0420	Catalyst system efficiency below threshold	Output waveforms of HO2S-1 and HO2S-2 are similar. (Time from output voltage change of HO2S-1 to that of HO2S-2 is shorter than specification.)	2 driving cycles	Not applicable
P0443	Purge control valve circuit malfunction	Purge control valve circuit is open or shorted to ground	2 driving cycles	Not applicable
P0480	Radiator fan control circuit malfunction	Radiator cooling fan relay terminal voltage is low when cooling temp. is lower than specification	2 driving cycles	Not applicable
P0500 (No.16)	Vehicle speed sensor malfunction	No signal while running in “D” range or during fuel cut at decelerating	2 driving cycles	1 driving cycle
P0505	Idle control system malfunction	No closed signal to IAC valve is detected	2 driving cycles	Not applicable
P0601 (No.71)	Internal control module memory check sum error	Data write error (or check sum error) when written into ECM	2 driving cycles	1 driving cycle
P1450 (No.29)	Barometric pressure sensor circuit malfunction	Barometric pressure is lower or higher than specification. (or sensor malfunction)	1 driving cycle	1 driving cycle

DTC NO.	DETECTING ITEM	DETECTING CONDITION (DTC will set when detecting :)	MIL (vehicle with immobilizer indicator lamp)	MIL (vehicle without immobilizer indicator lamp)
P1451	Barometric pressure sensor performance problem	Difference between manifold absolute pressure (MAP sensor value) and barometric pressure (barometric pressure sensor value) is larger than specification during cranking.	2 driving cycles	Not applicable
P1500	Starter signal circuit malfunction	Starter signal is not inputted from engine cranking till its start and after or it is always inputted	2 driving cycles	Not applicable
P1510	ECM backup power source malfunction	No backup power after starting engine	1 driving cycle	Not applicable
P1600	Serial communication problem between ECM and TCM	No signal or check sum error while engine running	1 driving cycle	Not applicable
P1717	AT D-range signal circuit malfunction	No “D” range (park/neutral position signal) is inputted while vehicle running	2 driving cycles	Not applicable

DTC NO.	DETECTING ITEM	DETECTING CONDITION (DTC will set when detecting :)	MIL
✱P0702	Transmission Control System Electrical	Refer to Section 7B	
✱P0705	Transmission Range Sensor Circuit Malfunction		
✱P0710	Transmission Fluid Temperature Sensor Circuit Malfunction		
✱P0715	Input/turbine Speed Sensor Circuit Malfunction		
✱P0720	Output Shaft Speed Sensor Circuit Malfunction		
✱P0725	Engine Speed Input Circuit Malfunction		
✱P0730	Incorrect Gear Ratio		
✱P0741	Torque Converter Clutch System Performance or Stuck Off		
✱P0743	Torque Converter Clutch System Electrical		
✱P0753	Shift Solenoid A Electrical		
✱P0758	Shift Solenoid B Electrical		
✱P0763	Shift Solenoid C Electrical		
✱P0768	Shift Solenoid D Electrical		
✱P0773	Shift Solenoid E Electrical		
✱P1700	Throttle Position Signal Input Malfunction		
✱P1702	Internal Control Module Memory Check Some Error		
✱P1709	Engine Coolant Temperature Signal Input Malfunction		

DTC NO.	DETECTING ITEM	DETECTING CONDITION (DTC will set when detecting :)	MIL
P1620 (No.84)	ECU code not registered	Refer to Section 8G	
P1621 (No.83)	No ECU code transmitted from Immobilizer Control Module		
P1622 (No.82)	Fault in ECM		
P1623 (No.81)	ECU code not matched		

NOTE:

- **For ( ) marked No. in DTC column, it is used for vehicle without immobilizer indication lamp.**
- **DTC No.12 appears when none of the other codes is identified.**
- **For vehicle with immobilizer indication lamp, star (∗) marked DTCs can be read with SUZUKI scan tool ECM application.**

FAIL-SAFE TABLE

When any of the following DTCs is detected, ECM enters fail-safe mode as long as malfunction continues to exist but that mode is canceled when ECM detects normal condition after that.

DTC NO.	TROUBLE AREA	FAIL-SAFE OPERATION	SYMPTOM
P0105 (No.11)	MAP SENSOR	ECM uses value determined by throttle opening and engine speed. ECM stops EGR, EVAP purge and idle air control.	Hard starting/ rough or incorrect idle/ excessive fuel consumption/ hesitation/ poor acceleration/ surge/ detonation or spark knock
P0110 (No.18)	IAT SENSOR	ECM controls actuators assuming that intake air temperature is 20°C.	Hard starting/ rough or incorrect idle/ excessive fuel consumption/ hesitation poor acceleration/ detonation or spark knock
P0115 (No.19)	ECT SENSOR	ECM controls actuators assuming that engine coolant temperature is 80°C. Radiator fan motor ON.	Hard starting/ rough or incorrect idle/ excessive fuel consumption/ hesitation poor acceleration/ detonation or spark knock
P0120 (No.13)	TP SENSOR	ECM controls actuators assuming that throttle opening is 20°.	Rough or incorrect idle/ excessive fuel consumption/ hesitation/ poor acceleration
P0130, P0134 (No.14)	HEATED OXYGEN SENOR-1	–	Hard starting/rough or incorrect idle/ excessive fuel consumption/ hesitation/ poor acceleration
P0325 (No.17)	KNOCK SENSOR	–	Detonation/ spark knock
P0335 (No.23)	CKP SENSOR	• Fix ignition timing. • ECM changes injection control system from sequential injection to simultaneous one.	Hard staring/ engine stall

DTC NO.	TROUBLE AREA	FAIL-SAFE OPERATION	SYMPTOM
P0340 (No.15)	CMP SENSOR	ECM changes injection control system from sequential injection to simultaneous one.	Hard starting
P0400	EGR VALVE	–	Hard starting/rough or incorrect idle/ excessive fuel consumption/ hesitation/ poor acceleration/ surge/ detonation or spark knock/ engine stall
P0420	CATALYST	–	–
P0443	PURGE CONTROL VALVE	–	Rough or incorrect idle/ surge/ hard starting/ engine stall
P0480	RADIATOR FAN CONTROL SYSTEM	–	Engine overheating
P0500 (No.16)	VEHICLE SPEED SENSOR	ECM stops idle air control.	Rough or incorrect idle
P0505	IDLE CONTROL SYSTEM	–	Engine stall/ rough or incorrect idle
P0601 (No.71)	ECM INTERNAL	–	Hard starting/ rough or incorrect idle/ excessive fuel consumption/ detonation or spark knock/ hesitation poor acceleration/
P1450 (No.29)	BAROMETRIC PRESSURE SENSOR	ECM controls actuators assuming that barometric pressure is 100 kPa (760 mmHg).	Hard starting/ rough or incorrect idle

VISUAL INSPECTION

Visually check following parts and systems.

INSPECTION ITEM	REFERRING SECTION
• Engine oil – level, leakage	Section 0B
• Engine coolant – level, leakage	Section 0B
• Fuel – level, leakage	Section 0B
• A/T fluid – level, leakage	Section 0B
• Air cleaner element – dirt, clogging	Section 0B
• Battery – fluid level, corrosion of terminal	
• Water pump belt – tension, damage	Section 0B
• Throttle cable – play, installation • Vacuum hoses of air intake system – disconnection, looseness, deterioration, bend • Connectors of electric wire harness – disconnection, friction	Section 6E1
• Fuses – burning	Section 8
• Parts – installation, bolt – looseness	
• Parts – deformation	
• Other parts that can be checked visually	
• Check following items at engine start, if possible – Malfunction indicator lamp – Operation – Charge warning lamp – Operation – Engine oil pressure warning lamp – Operation – Engine coolant temp. meter – Operation – Fuel level meter – Operation – Tachometer, if equipped – Operation – Abnormal air being inhaled from air intake system – Exhaust system – leakage of exhaust gas, noise	 Section 6 Section 6H Section 8 (Section 6 for pressure check) Section 8 Section 8

ENGINE BASIC INSPECTION

This check is very important for troubleshooting when ECM has detected no DTC and no abnormality has been found in visual inspection.
Follow the flow table carefully.

Step	Action	Yes	No
1	Was “ENGINE DIAG. FLOW TABLE” performed?	Go to Step 2.	Go to “ENGINE DIAG. FLOW TABLE”.
2	Check battery voltage. Is it 11 V or more?	Go to Step 3.	Charge or replace battery.
3	Is engine cranked?	Go to Step 4.	Go to “DIAGNOSIS” in Section 6G.
4	Does engine start?	Go to Step 5.	Go to Step 7.
5	Check idle speed as follows : 1) Warm up engine to normal operating temp. 2) Shift transmission to neutral position for M/T (“P” position for A/T). 3) All of electrical loads are switched off. 4) Check engine idle speed with scan tool. See Fig. 1. Is it 650 – 750 r/min (700 – 800 r/min. for A/T vehicle)?	Go to Step 6.	Go to “ENGINE DIAGNOSIS TABLE”.
6	Check ignition timing as follows : 1) When SUZUKI scan tool is not available, disconnect scan tool from DLC and connect test switch terminal of monitor connector to ground. See Fig. 2. When using SUZUKI scan tool, select “MISC” mode on SUZUKI scan tool and fix ignition timing to initial one. See Fig. 3. 2) Using timing light (1), check initial ignition timing. See Fig. 4. Is it 5° ± 3° BTDC at specified idle speed?	Go to “ENGINE DIAGNOSIS TABLE”.	Check ignition control related parts referring to Section 6F1.
7	Is immobilizer control system equipped?	Go to Step 8.	Go to Step 9.
8	Check immobilizer system malfunction as follows. 1) Check immobilizer indicator lamp or MIL (malfunction indicator lamp) for flashing. Is it flashing when ignition switch is turned to ON position?	Go to “DIAGNOSIS” in Section 8G.	Go to Step 9.
9	Check fuel supply as follows : 1) Check to make sure that enough fuel is filled in fuel tank. 2) Turn ON ignition switch for 2 seconds and then OFF. See Fig. 5. Is fuel pressure felt from fuel feed hose (1) when ignition switch is turned ON?	Go to Step 11.	Go to Step 10.
10	Check fuel pump for operating. Was fuel pump operating sound heard from fuel filler for about 10 seconds after ignition switch ON and stop?	Go to “DIAG. FLOW TABLE B-3”.	Go to “DIAG. FLOW TABLE B-2”.

Step	Action	Yes	No
11	Check ignition spark as follows : 1) Disconnect injector couplers. 2) Remove spark plugs and connect them to high tension cords. 3) Ground spark plugs. 4) Crank engine and check if each spark plug sparks. Is it in good condition?	Go to Step 12.	Go to “DIAGNOSIS” in Section 6F1.
12	Check fuel injector for operation as follows : 1) Install spark plugs and connect injector connectors. 2) Using sound scope (1), check operating sound of each injector (2) when cranking engine. See Fig. 6. Was injector operating sound heard from all injectors?	Go to “ENGINE DIAGNOSIS TABLE”.	Go to “DIAG. FLOW TABLE B-1”.

Fig. 1 for Step 5

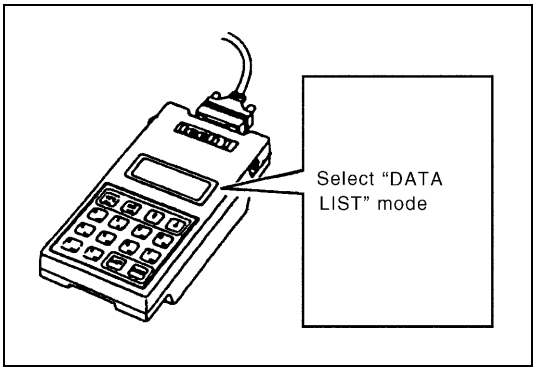

Fig. 2 for Step 6

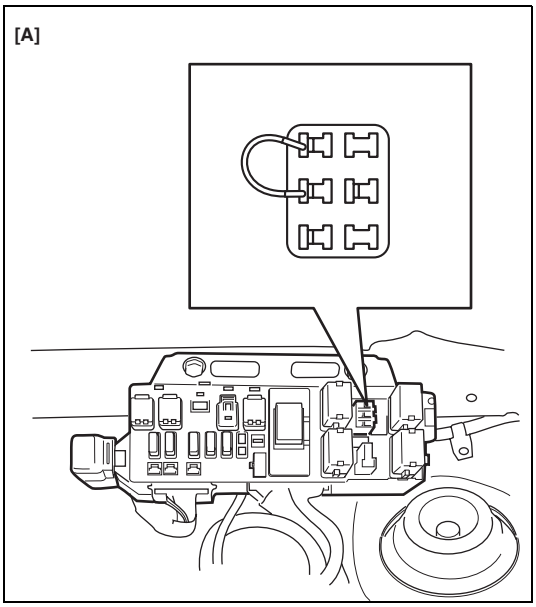

[A] : When not using SUZUKI scan tool:

Fig. 3 for Step 6

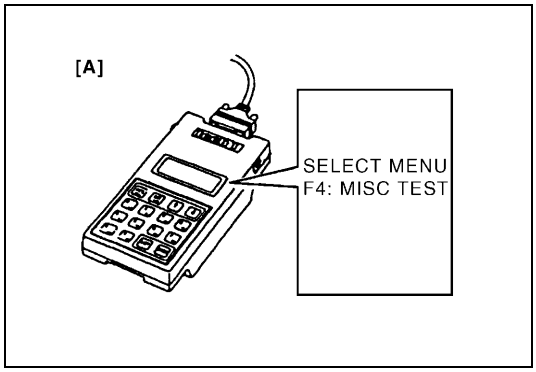

[A] : When using SUZUKI scan tool

Fig. 4 for Step 6

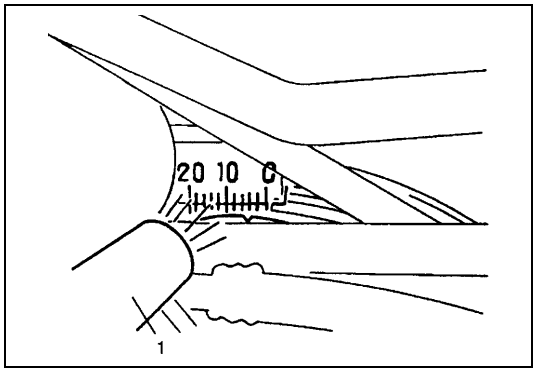

Fig. 5 for Step 9

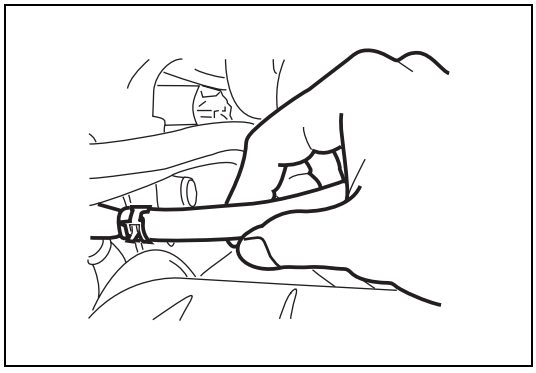

Fig. 6 for Step 12

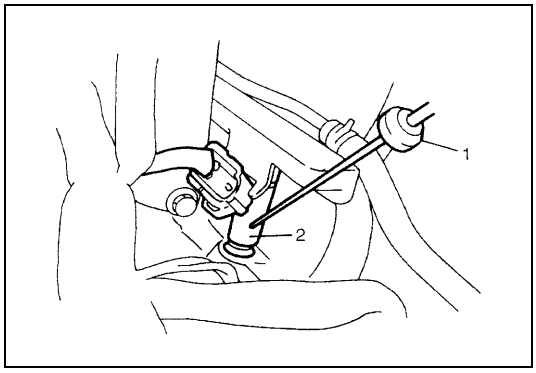

ENGINE DIAGNOSIS TABLE

Perform troubleshooting referring to following table when ECM has detected no DTC and no abnormality has been found in visual inspection and engine basic inspection previously.

Condition	Possible Cause	Correction
Hard Starting (Engine cranks OK)	Faulty spark plug	Spark plugs in Section 6F1.
	Leaky high-tension cord	High-tension cords in Section 6F1.
	Loose connection or disconnection of high-tension cords or lead wires	High-tension cords in Section 6F1.
	Faulty ignition coil	Ignition coil in Section 6F1.
	Dirty or clogged fuel hose or pipe	Diagnostic Flow Table B-3.
	Malfunctioning fuel pump	Diagnostic Flow Table B-3.
	Air inhaling from intake manifold gasket or throttle body gasket	
	Faulty idle air control system	Diagnostic Flow Table B-4.
	Faulty ECT sensor or MAP sensor	ECT sensor or MAP sensor in Section 6E1.
	Faulty ECM	
Hard Starting (Engine cranks OK)	Poor spark plug tightening or faulty gasket	Spark plugs in Section 6F1.
	Compression leak from valve seat	Valves inspection in Section 6A1.
	Sticky valve stem	Valves inspection in Section 6A1.
	Weak or damaged valve springs	Valve springs inspection in Section 6A1.
	Compression leak at cylinder head gasket	Cylinder head inspection in Section 6A1.
	Sticking or damaged piston ring	Cylinders, pistons and piston rings inspection in Section 6A1.
	Worn piston, ring or cylinder	Cylinders, pistons and piston rings inspection in Section 6A1.
	Malfunctioning PCV valve	PCV system in Section 6E1.
	Low compression	Compression check in Section 6A1.
Low oil pressure	Improper oil viscosity	Engine oil and oil filter change in Section 0B.
	Malfunctioning oil pressure switch	Oil pressure switch inspection in Section 8.
	Clogged oil strainer	Oil pan and oil pump strainer cleaning in Section 6A1.
	Functional deterioration of oil pump	Oil pump in Section 6A1.
	Worn oil pump relief valve	Oil pump in Section 6A1.
	Excessive clearance in various sliding parts	

Condition	Possible Cause	Correction
Engine noise **Note : Before checking mechanical noise, make sure that :** **Specified spark plug is used.** **Specified fuel is used.**	Improper valve lash	Valve lash in Section 6A1.
	Worn valve stem and guide	Valves inspection in Section 6A1.
	Weak or broken valve spring	Valve springs inspection in Section 6A1.
	Warped or bent valve	Valves inspection in Section 6A1.
	Worn piston, ring and cylinder bore	Pistons and cylinders inspection in Section 6A1.
	Worn rod bearing	Crank pin and connecting rod bearing inspection in Section 6A1.
	Worn crank pin	Crank pin and connecting rod bearing inspection in Section 6A1.
	Loose connecting rod nuts	Connecting rod installation in Section 6A1.
	Low oil pressure	Previously outlined.
	Low oil pressure	Previously outlined.
	Worn bearing	Crankshaft and bearing inspection in Section 6A1.
	Worn crankshaft journal	Crankshaft and bearing inspection in Section 6A1.
	Loose bearing cap bolts	Crankshaft inspection in Section 6A1.
	Excessive crankshaft thrust play	Crankshaft thrust play inspection in Section 6A1.
Overheating	Inoperative thermostat	Thermostat in Section 6B.
	Poor water pump performance	Water pump in Section 6B.
	Clogged or leaky radiator	Radiator in Section 6B.
	Improper engine oil grade	Engine oil and oil filter change in Section 0B.
	Clogged oil filter or oil strainer	Oil pressure check in Section 6A1.
	Poor oil pump performance	Oil pressure check in Section 6A1.
	Faulty radiator fan control system	Radiator fan control system in Section 6E1.
	Dragging brakes	Trouble diagnosis in Section 5.
	Slipping clutch	Trouble diagnosis in Section 7C.
	Blown cylinder head gasket	Cylinder head in Section 6A1.

Condition	Possible Cause	Correction
Poor gasoline mileage	Leaks or loose connection of high-tension cord	High-tension cords in Section 6F1.
	Faulty spark plug (improper gap, heavy deposits and burned electrodes, etc.)	Spark plugs in Section 6F1.
	Malfunctioning EGR valve (if equipped)	EGR system in Section 6E1.
	High idle speed	Refer to item “Improper engine idle speed” previously outlined.
	Poor performance of TP sensor, ECT sensor or MAP sensor	TP sensor, ECT sensor or MAP sensor in Section 6E1.
	Faulty EGR valve (if equipped)	EGR system in Section 6E1.
	Faulty fuel injector(s)	Diagnostic Flow Table B-1.
	Faulty ECM	
	Poor valve seating	Valves inspection in Section 6A1.
	Dragging brakes	Trouble diagnosis in Section 5.
	Slipping clutch	Trouble diagnosis in Section 7C.
	Thermostat out of order	Thermostat in Section 6B.
	Improper tire pressure	Refer to Section 3F.
	Low Compression	Previously outlined
Excessive engine oil consumption	Blown cylinder head gasket	Cylinder head in Section 6A1.
	Leaky camshaft oil seals	Camshaft in Section 6A1.
	Sticky piston ring	Piston cleaning in Section 6A1.
	Worn piston and cylinder	Pistons and cylinders inspection in Section 6A1.
	Worn piston ring groove and ring	Pistons inspection in Section 6A1.
	Improper location of piston ring gap	Pistons assembly in Section 6A1.
	Worn or damaged valve stem seal	Valves removal and installation in Section 6A1.
	Worn valve stem	Valves inspection in Section 6A1.
Engine hesitates (Momentary lack of response as accelerator is depressed. Can occur at all vehicle speeds. Usually most severe when first trying to make vehicle move, as from a stop sign.)	Spark plug faulty or plug gap out of adjustment	Spark plugs in Section 6F1.
	Leaky high-tension cord	High-tension cords in Section 6F1.
	Fuel pressure out of specification	Diagnostic Flow Table B-3.
	Malfunctioning EGR valve (if equipped)	EGR system in section 6E1.
	Poor performance of TP sensor, ECT sensor or MAP sensor	TP sensor, ECT sensor or MAP sensor in Section 6E1.
	Faulty fuel injector	Diagnostic Flow Table B-1.
	Faulty ECM	
	Engine overheating	Refer to “Overheating” section.
	Low compression	Previously outlined.
Surge (Engine power variation under steady throttle or cruise. Feels like vehicle speeds up and down with no change in accelerator pedal.)	Leaky or loosely connected high-tension cord	High-tension cords in Section 6F1.
	Faulty spark plug (excess carbon deposits, improper gap, and burned electrodes, etc.)	Spark plugs in Section 6F1.
	Variable fuel pressure	Diagnostic Flow Table B-3.
	Kinky or damaged fuel hose and lines	
	Faulty fuel pump (clogged fuel filter)	
	Malfunctioning EGR valve	EGR system in Section 6E1.
	Poor performance of MAP sensor	MAP sensor in Section 6E1.
	Faulty fuel injector	Diagnostic Flow Table B-1.
	Faulty ECM	

Condition	Possible Cause	Correction
Excessive detonation (Engine makes continuously sharp metallic knocks that change with throttle opening. Sounds like pop corn popping.)	Faulty spark plug	Spark plugs in Section 6F1.
	Loose connection of high-tension cord	High-tension cords in Section 6F1.
	Engine overheating	Refer to “Overheating” section.
	Clogged fuel filter (faulty fuel pump) or fuel lines	Diagnostic Flow Table B-1 or B-2.
	Air inhaling from intake manifold or throttle body gasket	
	Malfunctioning EGR valve (if equipped)	EGR system in Section 6E1.
	Poor performance of knock sensor, ECT sensor or MAP sensor	Knock sensor in Section 6, ECT sensor or MAP sensor in Section 6E1.
	Faulty fuel injector(s)	Diagnostic Flow Table B-1.
	Faulty ECM	
	Excessive combustion chamber deposits	Piston and cylinder head cleaning in Section 6A1.
Engine has no power	Faulty spark plug	Spark plugs in Section 6F1.
	Faulty ignition coil with ignitor	Ignition coil in Section 6F1.
	Leaks, loose connection or disconnection of high-tension cord	High-tension cords in Section 6F1.
	Faulty knock sensor	Knock sensor malfunction in this section.
	Clogged fuel hose or pipe	Diagnostic Flow Table B-3.
	Malfunctioning fuel pump	Diagnostic Flow Table B-2.
	Air inhaling from intake manifold gasket or throttle body gasket	
	Engine overheating	Refer to “Overheating” section.
Engine has no power	Malfunctioning EGR valve (if equipped)	EGR system inspection in Section 6E1.
	Maladjusted accelerator cable play	Accelerator cable play in Section 6E1.
	Poor performance of TP sensor, ECT sensor or MAP sensor	TP sensor, ECT sensor or MAP sensor in Section 6E1.
	Faulty fuel injector(s)	Diagnostic Flow Table B-1.
	Faulty ECM	
	Dragging brakes	Trouble diagnosis in Section 5.
	Slipping clutch	Trouble diagnosis in Section 7C.
	Low compression	Previously outlined.

Condition	Possible Cause	Correction
Improper engine idling or engine fails to idle	Faulty spark plug	Spark plugs in Section 6F1.
	Leaky or disconnected high-tension cord	High-tension cords in Section 6F1.
	Faulty ignition coil with ignitor	Ignition coil in Section 6F1.
	Fuel pressure out of specification	Diagnostic Flow Table B-3.
	Leaky manifold, throttle body, or cylinder head gasket	
	Malfunctioning EGR valve (if equipped)	EGR system in Section 6E1.
	Faulty idle air control system	Diagnostic Flow Table B-4.
	Faulty evaporative emission control system	EVAP control system in Section 6E1.
	Faulty EGR system (if equipped)	EGR system in Section 6E1.
	Faulty fuel injector(s)	Diagnostic Flow Table B-1.
	Poor performance of ECT sensor, TP sensor or MAP sensor	ECT sensor, TP sensor or MAP sensor in Section 6E1.
	Faulty ECM	
	Loose connection or disconnection of vacuum hoses	
	Malfunctioning PCV valve	PCV system in Section 6E1.
	Engine overheating	Refer to “Overheating” section.
	Low compression	Previously outlined.
Excessive hydrocarbon (HC) emission or carbon monoxide (CO)	Faulty spark plug	Spark plugs in Section 6F1.
	Leaky or disconnected high-tension cord	High-tension cords in Section 6F1.
	Faulty ignition coil with ignitor	Ignition coil assembly in Section 6F1.
	Low compression	Refer to “Low compression” section.
	Lead contamination of three way catalytic converter	Check for absence of filler neck restrictor.
	Faulty evaporative emission control system	EVAP control system in Section 6E1.
	Fuel pressure out of specification	Diagnostic Flow Table B-3.
	Closed loop system (A/F feed back compensation) fails • Faulty TP sensor • Poor performance of ECT sensor or MAP sensor	 TP sensor in Section 6E1. ECT sensor or MAP sensor in Section 6E1.
	Faulty injector(s)	Diagnostic Flow Table B-1
	Faulty ECM	
	Engine not at normal operating temperature	
	Clogged air cleaner	
	Vacuum leaks	
Excessive nitrogen oxides (NOx) emission	Improper ignition timing	See section 6F1.
	Lead contamination of catalytic converter	Check for absence of filler neck restrictor.
	Faulty EGR system (if equipped)	EGR system in Section 6E1.
	Fuel pressure out of specification	Diagnostic Flow Table B-3.
	Closed loop system (A/F feed back compensation) fails • Faulty TP sensor • Poor performance of ECT sensor or MAP sensor	 TP sensor in Section 6E1. ECT sensor or MAP sensor in Section 6E1.
	Faulty injector(s)	Diagnostic Flow Table B-1
	Faulty ECM	

SCAN TOOL DATA

As the data values given below are standard values estimated on the basis of values obtained from the normally operating vehicles by using a scan tool, use them as reference values. Even when the vehicle is in good condition, there may be cases where the checked value does not fall within each specified data range. Therefore, judgment as abnormal should not be made by checking with these data alone.
Also, conditions in the below table that can be checked by the scan tool are those detected by ECM and output from ECM as commands and there may be cases where the engine or actuator is not operating (in the condition) as indicated by the scan tool. Be sure to use the timing light to check the ignition timing.

NOTE:

- **With the generic scan tool, only star (∗) marked data in the table below can be read.**
- **The triangle (△) marked data in the table below can not be read for vehicle without immobilizer indicator lamp.**
- **When checking the data with the engine running at idle or racing, be sure to shift M/T gear to the neutral gear position and A/T gear to the "Park" position and pull the parking brake fully. Also, if nothing or "no load" is indicated, turn OFF A/C, all electric loads, P/S and all the other necessary switches.**

		SCAN TOOL DATA	VEHICLE CONDITION	NORMAL CONDITION/ REFERENCE VALUES
	∗	FUEL SYSTEM B1 (FUEL SYSTEM STATUS)	At specified idle speed after warming up	CLOSED (closed loop)
	∗	CALC LOAD (CALCULATED LOAD VALUE)	At specified idle speed with no load after warming up	3 – 9%
			At 2500 r/min with no load after warming up	12 – 17%
	∗	COOLANT TEMP. (ENGINE COOLANT TEMP.)	At specified idle speed after warming up	80 – 100°C, 176 – 212°F
	∗	SHORT FT B1 (SHORT TERM FUEL TRIM)	At specified idle speed after warming up	– 20 – +20%
	∗	LONG FT B1 (LONG TERM FUEL TRIM)	At specified idle speed after warming up	– 15 – +15%
	∗	MAP (INTAKE MANIFOLD ABSOLUTE PRESSURE)	At specified idle speed with no load after warming up	30 – 37 kPa, 220 – 280 mmHg
	∗	ENGINE SPEED	At idling with no load after warming up	Desired idle speed ±50 r/min
	∗	VEHICLE SPEED	At stop	0 km/h, 0 MPH
	∗	IGNITION ADVANCE (IGNITION TIMING ADVANCE FOR NO.1 CYLINDER)	At specified idle speed with no load after warming up	6 – 16° BTDC
	∗	INTAKE AIR TEMP.	At specified idle speed after warming up	Ambient temp. : +15°C (59°F) –5°C (23°F)
	∗	MAF (MASS AIR FLOW RATE)	At specified idle speed with no load after warming up	1 – 4 gm/sec
			At 2500 r/min with no load after warming up	4 – 9 gm/sec

		SCAN TOOL DATA	VEHICLE CONDITION		NORMAL CONDITION/ REFERENCE VALUES	
	✱	THROTTLE POS (ABSOLUTE THROTTLE POSITION)	Ignition switch ON/engine stopped	Throttle valve fully closed	7 – 18%	
				Throttle valve fully open	70 – 90%	
	✱	O2S B1 S1 (HEATED OXYGEN SENSOR-1)	At specified idle speed after warming up		0.01 – 0.95 V	
Δ	✱	O2S B1 S2 (HEATED OXYGEN SENSOR-2)	When engine is running at 2000 r/min. for 3 min or longer after warming up.		0.01 – 0.95 V	
Δ	✱	O2S FT B1 S1	At specified idle speed after warning up		– 20 – +20%	
Δ	✱	DIS. WITH MIL ON	–		–	
		DESIRED IDLE (DESIRED IDLE SPEED)	At idling with no load after warming up, M/T at neutral, A/T at “P” range		M/T	700 r/min
					A/T	750 r/min
		TP SENSOR VOLT (THROTTLE POSITION SENSOR OUTPUT VOLTAGE)	Ignition switch ON/engine stopped	Throttle valve fully closed	More than 0.2 V	
				Throttle valve fully open	Less than 4.8 V	
		INJ PULSE WIDTH (FUEL INJECTION PULSE WIDTH)	At specified idle speed with no load after warming up		2.0 – 3.6 msec.	
			At 2500 r/min with no load after warming up		2.0 – 3.6 msec.	
		IAC FLOW DUTY (IDLE AIR CONTROL FLOW DUTY)	At idling with no load after warming up		5 – 25%	
		TOTAL FUEL TRIM	At specified idle speed after warming up		– 35 – +35%	
		BATTERY VOLTAGE	Ignition switch ON/engine stop		12 – 14 V	
		CANIST PRG DUTY (EVAP CANISTER PURGE FLOW DUTY)	–		0 – 100%	
		CLOSED THROT POS (CLOSED THROTTLE POSITION)	Throttle valve at idle position		ON	
			Throttle valve opens larger than idle position		OFF	
		FUEL CUT	When engine is at fuel cut condition		ON	
			Other than fuel cut condition		OFF	
		RADIATOR FAN (RADIATOR FAN CONTROL RELAY)	Ignition switch ON	Engine coolant temp. : Lower than 95°C (203°F)	OFF	
				Engine coolant temp. : 97.5°C (208°F) or higher	ON	
		ELECTRIC LOAD	Ignition switch ON/Headlight, small light and rear window defogger all turned OFF		OFF	
			Ignition switch ON/Headlight, small light or rear window defogger turned ON		ON	
		A/C SWITCH	Engine running after warming up, A/C not operating		OFF	
			Engine running after warming up, A/C operating		ON	

		SCAN TOOL DATA	VEHICLE CONDITION		NORMAL CONDITION/ REFERENCE VALUES
		PNP SIGNAL (PARK/NEUTRAL POSITION SIGNAL) A/T only	Ignition switch ON	Selector lever in “P” or “N” position	P/N Range
				Selector lever in “R”, “D”, “2” or “L” position	D Range
		EGR VALVE	At specified idle speed after warming up		0%
Δ		FUEL TANK LEVEL	–		0 – 100%
		BAROMETRIC PRESS	–		Display the barometric pressure
		FUEL PUMP	Within 3 seconds after ignition switch ON or engine running		ON
			Engine stop at ignition switch ON.		OFF
		BRAKE SW	Ignition switch ON	Brake pedal is depressing	ON
				Brake pedal is releasing	OFF
		BLOWER FAN	Ignition switch ON	Blower fan switch ON	ON
				Blower fan switch OFF	OFF
		A/C MAG CLUTCH	Ignition switch ON	A/C switch ON	ON
				A/C switch OFF	OFF

SCAN TOOL DATA DEFINITIONS :

FUEL SYSTEM (FUEL SYSTEM STATUS)

Air/fuel ratio feedback loop status displayed as either open or closed loop. Open indicates that ECM ignores feedback from the exhaust oxygen sensor.
Closed indicates final injection duration is corrected for oxygen sensor feedback.

CALC LOAD (CALCULATED LOAD VALUE, %)

Engine load displayed as a percentage of maximum possible load. Value is calculated mathematically using the formula : actual (current) intake air volume ÷ maximum possible intake air volume x 100%.

COOLANT TEMP. (ENGINE COOLANT TEMPERATURE, °C, °F)

It is detected by engine coolant temp. sensor

SHORT FT B1 (SHORT TERM FUEL TRIM, %)

Short term fuel trim value represents short term corrections to the air/fuel mixture computation. A value of 0 indicates no correction, a value greater than 0 means an enrichment correction, and a value less than 0 implies an enleanment correction.

LONG FT B1 (LONG TERM FUEL TRIM, %)

Long term fuel trim Value represents long term corrections to the air/fuel mixture computation. A value of 0 indicates no correction, a value greater than 0 means an enrichment correction, and a value less than 0 implies an enleanment correction.

MAP (INTAKE MANIFOLD ABSOLUTE PRESSURE, kPa, inHg)

It is detected by manifold absolute pressure sensor and used (among other things) to compute engine load.

ENGINE SPEED (rpm)

It is computed by reference pulses from crankshaft position sensor.

VEHICLE SPEED (km/h, MPH)

It is computed based on pulse signals from vehicle speed sensor.

IGNITION ADVANCE (IGNITION TIMING ADVANCE FOR NO.1 CYLINDER, °)

Ignition timing of NO.1 cylinder is commanded by ECM. The actual ignition timing should be checked by using the timing light.

INTAKE AIR TEMP. (°C, °F)

It is detected by intake air temp. sensor and used to determine the amount of air passing into the intake manifold as air density varies with temperature.

MAF (MASS AIR FLOW RATE, gm/s, lb/min)

It represents total mass of air entering intake manifold which is computed based on signals from MAP sensor, IAT sensor, TP sensor, etc.

THROTTLE POS (ABSOLUTE THROTTLE POSITION, %)

When throttle position sensor is fully closed position, throttle opening is indicated as 0% and 100% full open position.

OXYGEN SENSOR B1 S1 (HEATED OXYGEN SENSOR-1, V)

It indicates output voltage of HO2S-1 installed on exhaust manifold (pre-catalyst).

OXYGEN SENSOR B1 S2 (HEATED OXYGEN SENSOR-2, V)

It indicates output voltage of HO2S-2 installed on exhaust pipe (post-catalyst). It is used to detect catalyst deterioration.

DESIRED IDLE (DESIRED IDLE SPEED, rpm)

The Desired Idle Speed is an ECM internal parameter which indicates the ECM requested idle. If the engine is not running, this number is not valid.

TP SENSOR VOLT (THROTTLE POSITION SENSOR OUTPUT VOLTAGE, V)

The Throttle Position Sensor reading provides throttle valve opening information in the form of voltage.

INJ PULSE WIDTH (FUEL INJECTION PULSE WIDTH, msec.)

This parameter indicates time of the injector drive (valve opening) pulse which is output from ECM (but injector drive time of NO.1 cylinder for multiport fuel injection).

IAC FLOW DUTY (IDLE AIR (SPEED) CONTROL DUTY, %)

This parameter indicates current flow time rate within a certain set cycle of IAC valve (valve opening rate) which controls the amount of bypass air (idle speed).

TOTAL FUEL TRIM (%)

The value of Total Fuel Trim is obtained by putting values of short Term Fuel Trim and Long Term Fuel Trim together. This value indicates how much correction is necessary to keep the air/fuel mixture stoichiometrical.

BATTERY VOLTAGE (V)

This parameter indicates battery positive voltage inputted from main relay to ECM.

CANIST PURGE DUTY (EVAP CANISTER PURGE FLOW DUTY, %)

This parameter indicates valve ON (valve open) time rate within a certain set cycle of EVAP purge solenoid valve which controls the amount of EVAP purge.
0% means that the purge valve is completely closed while 100% is a fully open valve.

CLOSED THROTTLE POSITION (ON/OFF)

This parameter will read ON when throttle valve is fully closed, or OFF when the throttle is not fully closed.

FUEL CUT (ON/OFF)

ON : Fuel being cut (output signal to injector is stopped)
OFF : Fuel not being cut

RADIATOR FAN (RADIATOR FAN CONTROL RELAY, ON/OFF)

ON : Command for radiator fan control relay operation being output.
OFF : Command for relay operation not being output.

ELECTRIC LOAD (ON/OFF)

ON : Headlight, small light or rear window defogger ON signal inputted.
OFF : Above electric loads all turned OFF.

A/C SWITCH (ON/OFF)

ON : Command for A/C operation being output from ECM to A/C compressor magnet clutch.
OFF : Command for A/C operation not being output.

FUEL TANK LEVEL (%)

This parameter indicates approximate fuel level in the fuel tank. As the detectable range of the fuel level sensor is set as 0 to 100%, however, with some models whose fuel tank capacity is smaller, the indicated fuel level may be only 70% even when the fuel tank is full.

PNP SIGNAL (PARK/NEUTRAL POSITION SIGNAL, P/N RANGE or D RANGE)

It is detected by signal from TCM.
D range : A/T is in “R”, “D”, “2” or “L” range.
P/N range : A/T is in “P” or “N” range or the above signal is not inputted from TCM.

EGR VALVE (%)

This parameter indicates opening rate of EGR valve which controls the amount of EGR flow.

INSPECTION OF ECM AND ITS CIRCUITS

ECM and its circuits can be checked at ECM wiring couplers by measuring voltage and resistance.

CAUTION:

ECM cannot be checked by itself. It is strictly prohibited to connect voltmeter or ohmmeter to ECM with coupler disconnected from it.

VOLTAGE CHECK

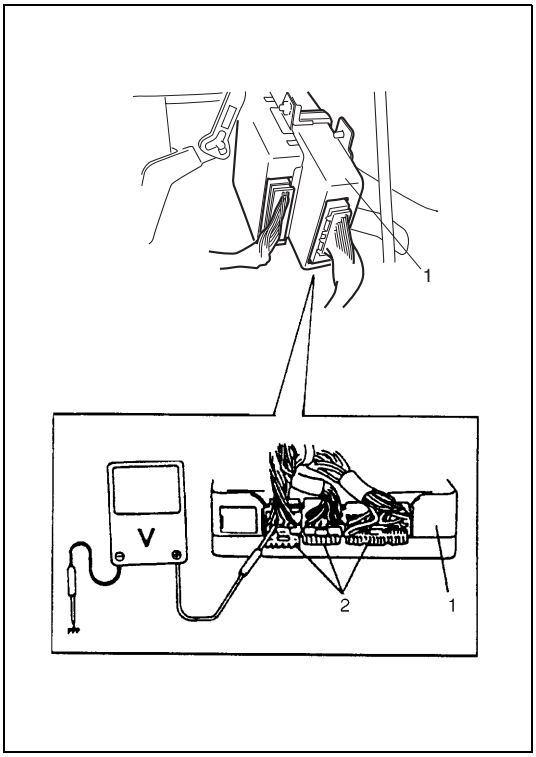

1) Remove ECM (1) from vehicle body referring to Section 6E.
2) Check voltage at each terminal of couplers (2) connected.

NOTE:

As each terminal voltage is affected by the battery voltage, confirm that it is 11 V or more when ignition switch is ON.

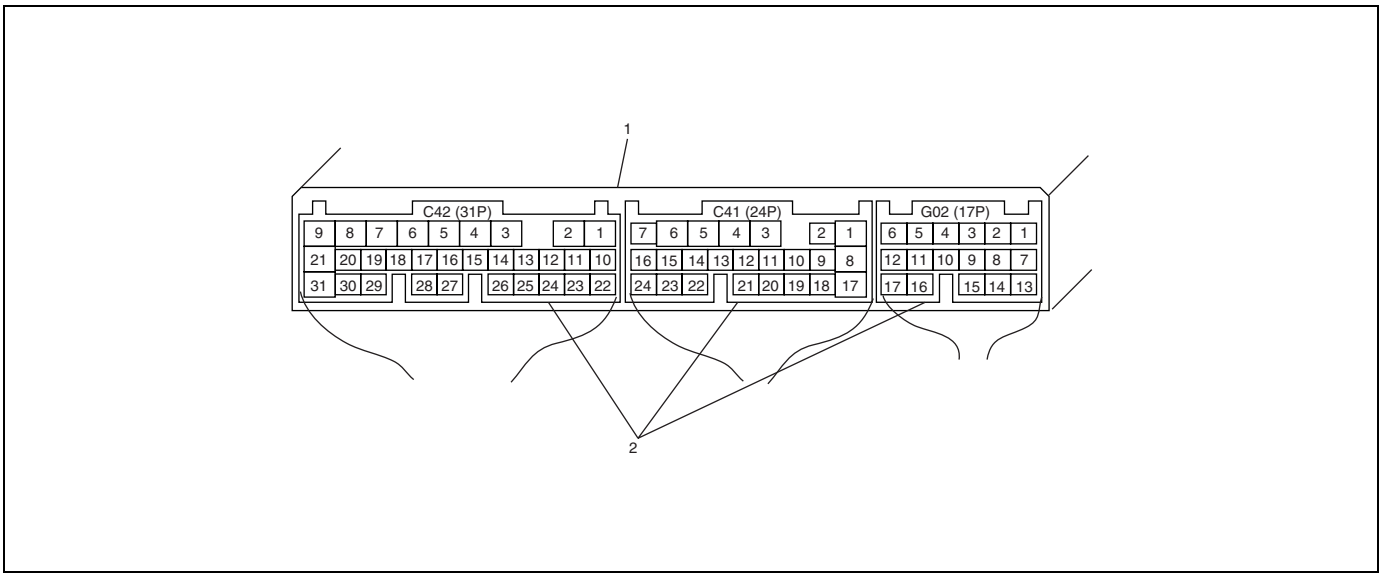

1. ECM
2. ECM couplers (Viewed from harness side)

ECM VOLTAGE VALUES TABLE

For TYPE A (See NOTE)

NOTE:

Type A is other than follows.

Type B is right hand steering vehicle equipped with fasten seat belt light and immobilizer control system.

TERMINAL NO.		CIRCUIT	NORMAL VOLTAGE	CONDITION
C42	1	Ground	–	–
	2	Ground	–	–
	3	Ground	–	–
	4	EVAP canister purge valve	10 – 14 V	Ignition switch ON
	5	Engine coolant temp. and barometric pressure signal for TCM (A/T)	Indication deflection repeated 0 V and 10 – 14 V	Ignition switch ON
	6	Idle air control valve	0 – 13 V	At specified idle speed after engine warmed up
	7	Heater of HO2S-1 (if equipped)	10 – 14 V	Ignition switch ON
	8	Fuel injector NO.4	10 – 14 V	Ignition switch ON
	9	Fuel injector NO.1	10 – 14 V	Ignition switch ON
	10	Sensor ground	–	–
	11	Camshaft position sensor	0 – 0.8 V and 4 – 6 V	Ignition switch ON
	12	Knock sensor (if equipped)	2.1 - 2.9 V	Ignition switch ON
	13	Heated oxygen sensor-1 (if equipped)	Refer to DTC P0130 diag. flow table	
		CO adjusting resistor (if equipped)	–	–
	14	Engine coolant temp. sensor	0.55 - 0.95 V	Ignition switch ON Engine coolant temp. : 80°C (176°F)
	15	Intake air temp. sensor	2.0 – 2.7 V	Ignition switch ON Intake air temp. : 20°C (68°F)
	16	Test switch terminal (Vehicle without immobilizer indicator lamp)	4 – 6 V	Ignition switch ON
	17	Electric load signal (+)	0V	Ignition switch ON Small light and rear defogger OFF
			10 – 14 V	Ignition switch ON Small light and rear defogger ON
	18	A/C triple pressure switch	10 – 14 V	A/C not operated
	19	Ignition coil #2	–	–
	20	Ignition coil #1	–	–
	21	Fuel injector NO.2	10 – 14 V	Ignition switch ON
	22	Power source for sensor	4.75 – 5.25 V	Ignition switch ON
	23	Crankshaft position sensor	–	–
	24	–	–	–
	25	Shield ground	–	–
	26	Manifold absolute pressure sensor	3.3 – 4.0 V	Ignition switch ON Barometric pressure : 100 kPa (760 mmHg)
	27	Diag. Switch terminal (Vehicle without immobilizer indicator lamp)	4 – 6 V	Ignition switch ON
	28	Monitor output (Vehicle without immobilizer indicator lamp)	–	–
	29	Blank	–	–
	30	Blank	–	–
	31	Fuel injector NO.3	10 – 14 V	Ignition switch ON

TERMINAL NO.		CIRCUIT	NORMAL VOLTAGE	CONDITION
C41	1	A/C compressor clutch	0 V	Ignition switch ON
	2	EGR valve (stepper motor coil 1) (if equipped)	10 – 14 V	Ignition switch ON
	3	Throttle position sensor	0.2 – 1.0 V	Ignition switch ON Throttle valve at idle position
			2.8 – 4.8 V	Ignition switch ON Throttle valve at full open position
	4	Heater of HO2S-2 (Vehicle with immobilizer indicator lamp)	10 – 14 V	Ignition switch ON
	5	Power source	10 – 14 V	Ignition switch ON
	6	Power source	10 – 14 V	Ignition switch ON
	7	Engine start switch (Engine start signal)	6 – 12 V	While engine cranking
			0 V	Other than above
	8	EGR valve (stepper motor coil 3) (if equipped)	10 – 14 V	Ignition switch ON
	9	EGR valve (stepper motor coil 2) (if equipped)	10 – 14 V	Ignition switch ON
	10	Main relay	10 – 14 V	Ignition switch OFF
			0.4 – 1.5 V	Ignition switch ON
	11	Blank	–	–
	12	Blank	–	–
	13	Heated oxygen sensor-2 (Vehicle with immobilizer indicator lamp)	Refer to DTC P0130 diag. flow table	
	14	D-range ID-up signal (A/T)	10 – 14 V	Ignition switch ON
	15	R-range signal (A/T)	0 V	Ignition switch ON
	16	A/C (input) signal	10 – 14 V	Ignition switch ON A/C switch OFF
			0 – 2 V	Ignition switch ON A/C switch ON
	17	EGR valve (stepper motor coil 4) (if equipped)	10 – 14 V	Ignition switch ON
	18	Radiator fan control relay	10 – 14 V	Ignition switch ON Engine coolant temp. : 9.5°C or lower (203°F)
			0 – 1 V	Ignition switch ON Engine coolant temp. : 97.5°C (208°F) or higher
	19	Fuel pump relay	0 – 1 V	For 2 seconds after ignition switch ON
			10 – 14 V	After the above time
	20	–	–	–

TERMINAL NO.		CIRCUIT	NORMAL VOLTAGE	CONDITION
C41	21	Throttle opening signal for TCM (A/T)	Indication deflection repeated 0 V and 10 – 14 V	Ignition switch ON
	22	Fuel level sensor (gauge) (Vehicle with immobilizer indicator lamp)	0 – 2 V	Ignition switch ON Fuel tank fully filled
			4.5 – 7.5 V	Ignition switch ON Fuel tank emptied
	23	Serial data for TCM	10 – 14 V and 0 – 1 V	Ignition switch ON
	24	Blank	–	–

TERMINAL NO.		CIRCUIT	NORMAL VOLTAGE	CONDITION
G02	1	Malfunction indicator lamp	0 – 1 V	Ignition switch ON
			10 – 14 V	When engine running
	2	Vehicle speed sensor	Indicator deflection repeated 0 V and 4 – 6 V	Ignition switch ON Front left tire turned slowly with front right tire locked
	3	Radiator fan control relay	10 – 14 V	Ignition switch ON and Engine coolant temp. : 100°C (212°F) or lower
			0 – 1 V	Ignition switch ON and Engine coolant temp. : 102.5°C (216.5°F) or higher
	4	Blank	–	–
	5	Data link connector (K line of ISO9141)	10 – 14 V	Ignition switch ON
	6	Ignition switch	10 – 14 V	Ignition switch ON
	7	Data link connector (SUZUKI serial data line)	4 – 6 V	Ignition switch ON
	8	Blank	–	–
	9	Stop lamp switch	0 V	Ignition switch ON Stop lamp switch OFF
			10 – 14 V	Ignition switch ON Stop lamp switch ON
	10	Sensor ground	–	–
	11	Blank	–	–
	12	Immobilizer indicator lamp	0 – 1 V	Ignition switch ON
			10 – 14 V	When engine running
	13	Electric load signal (–)	0 – 2 V	Ignition switch ON Blower fan turned OFF
			10 – 14 V	Ignition switch ON Blower fan turned ON
	14	A/C evaporator temp. sensor	–	–
	15	Blank	–	–
	16	Tachometer (if equipped)	0 – 1 V	Ignition switch ON

TERMINAL NO.		CIRCUIT	NORMAL VOLTAGE	CONDITION
G02	17	Power source for back-up	10 – 14 V	Anytime

For TYPE B (For applicable mode, refer to NOTE in "ECM VOLTAGE VALUES TABLE")

TERMINAL NO.		CIRCUIT	NORMAL VOLTAGE	CONDITION
C42	1	Ground	–	–
	2	Ground	–	–
	3	Ground	–	–
	4	EVAP canister purge valve	10 – 14 V	Ignition switch ON
	5	–	–	–
	6	Idle air control valve	0 – 13 V	At specified idle speed after engine warmed up
	7	Heater of HO2S-1 (if equipped)	10 – 14 V	Ignition switch ON
	8	Fuel injector NO.4	10 – 14 V	Ignition switch ON
	9	Fuel injector NO.1	10 – 14 V	Ignition switch ON
	10	Sensor ground	–	–
	11	Camshaft position sensor	0 – 0.8 V and 4 – 6 V	Ignition switch ON
	12	Shield ground	–	–
	13	Heated oxygen sensor-1 (if equipped)	Refer to DTC P0130 diag. flow table	
		CO adjusting resistor (if equipped)	–	–
	14	Engine coolant temp. sensor	0.55 - 0.95 V	Ignition switch ON Engine coolant temp. : 80°C (176°F)
	15	Intake air temp. sensor	2.0 – 2.7 V	Ignition switch ON Intake air temp. : 20°C (68°F)
	16	Throttle position sensor	0.2 – 1.0 V	Ignition switch ON Throttle valve at idle position
			2.8 – 4.8 V	Ignition switch ON Throttle valve at full open position
	17	EGR valve (stepper motor coil 3) (if equipped)	10 – 14 V	Ignition switch ON
	18	EGR valve (stepper motor coil 1) (if equipped)	10 – 14 V	Ignition switch ON
	19	Ignition coil #2	–	–
	20	Ignition coil #1	–	–
	21	Fuel injector NO.2	10 – 14 V	Ignition switch ON
	22	Power source for sensor	4.75 – 5.25 V	Ignition switch ON
	23	Crankshaft position sensor	–	–
	24	–	–	–
	25	knock sensor (if equipped)	2.1 – 2.9 V	Ignition switch ON
	26	Manifold absolute pressure sensor	3.3 – 4.0 V	Ignition switch ON Barometric pressure : 100 kPa (760 mmHg)
	27	–	–	–
	28	EGR valve (stepper motor coil 4) (if equipped)	10 – 14 V	Ignition switch ON
	29	EGR valve (stepper motor coil 2) (if equipped)	10 – 14 V	Ignition switch ON
	30	A/C triple pressure switch	10 – 14 V	A/C not operated
	31	Fuel injector NO.3	10 – 14 V	Ignition switch ON

TERMINAL NO.		CIRCUIT	NORMAL VOLTAGE	CONDITION
C41	1	A/C compressor clutch	0 V	Ignition switch ON
	2	–	–	–
	3	–	–	–
	4	–	–	–
	5	Power source	10 – 14 V	Ignition switch ON
	6	Power source	10 – 14 V	Ignition switch ON
	7	Power source for back-up	10 – 14V	Anytime
	8	Monitor output (Vehicle without immobilizer indicator lamp)	–	–
	9	Radiator fan control relay	10 – 14 V	Ignition switch ON and Engine coolant temp. : 100°C (212°F)or lower
			0 – 1 V	Ignition switch ON and Engine coolant temp. : 102.5°C (216.5°F) or higher
	10	Main relay	10 – 14 V	Ignition switch OFF
			0.4 – 1.5 V	Ignition switch ON
	11	Ignition switch	10 – 14 V	Ignition switch ON
	12	Blank	–	–
	13	–	–	–
	14	Diag. Switch terminal (Vehicle without immobilizer indicator lamp)	4 – 6 V	Ignition switch ON
	15	Test switch terminal (Vehicle without immobilizer indicator lamp)	4 – 6 V	Ignition switch ON
	16	A/C (input) signal	10 – 14 V	Ignition switch ON A/C switch OFF
			0 – 2 V	Ignition switch ON A/C switch ON
	17	Electric load signal (+)	0 V	Ignition switch ON Small light and rear defogger OFF
			10 – 14 V	Ignition switch ON Small light and rear defogger OFF
	18	Radiator fan control relay	10 – 14 V	Ignition switch ON Engine coolant temp. : 9.5°C or lower (203°F)
			0 – 1 V	Ignition switch ON Engine coolant temp. : 97.5°C (208°F) or higher
	19	Fuel pump relay	0 – 1 V	For 2 seconds after ignition switch ON
			10 – 14 V	After the above time
	20	Engine start switch (Engine start signal)	6 – 12 V	While engine cranking
			0 V	Other than above

TERMINAL NO.		CIRCUIT	NORMAL VOLTAGE	CONDITION
C41	21	Stop lamp switch	0 V	Ignition switch ON Stop lamp switch OFF
			10 – 14 V	Ignition switch ON Stop lamp switch ON
	22	Vehicle speed sensor	Indication deflection repeated 0 V and 10 – 14 V	Ignition switch ON Front left tire turned slowly with front right tire locked
	23	–	–	–
	24	–	–	–

TERMINAL NO.		CIRCUIT	NORMAL VOLTAGE	CONDITION
G02	1	A/C evaporator temp. sensor	–	–
	2	R-range signal (A/T)	0 V	Ignition switch ON
	3	–	–	–
	4	–	–	–
	5	Engine coolant temp. and barometric pressure signal for TCM (A/T)	Indication deflection repeated 0 V and 10 – 14 V	Ignition switch ON
	6	D-range ID-up signal (A/T)	10 – 14 V	Ignition switch ON
	7	Data link connector (SUZUKI serial data line)	4 – 6 V	Ignition switch ON
	8	Blank	–	–
	9	Malfunction indicator lamp	0 – 1 V	Ignition switch ON
			10 – 14 V	When engine running
	10	–	–	–
	11	Data link connector (K line of ISO9141)	10 – 14 V	Ignition switch ON
	12	Blank	–	–
	13	Electric load signal (–)	0 – 2 V	Ignition switch ON Blower fan turned OFF
			10 – 14 V	Ignition switch ON Blower fan turned ON
	14	Sensor ground	–	–
	15	Throttle opening signal for TCM (A/T)	Indication deflection repeated 0 V and 10 – 14 V	Ignition switch ON
	16	Tachometer (if equipped)	0 – 1 V	Ignition switch ON
	17	–	–	–

Resistance Check

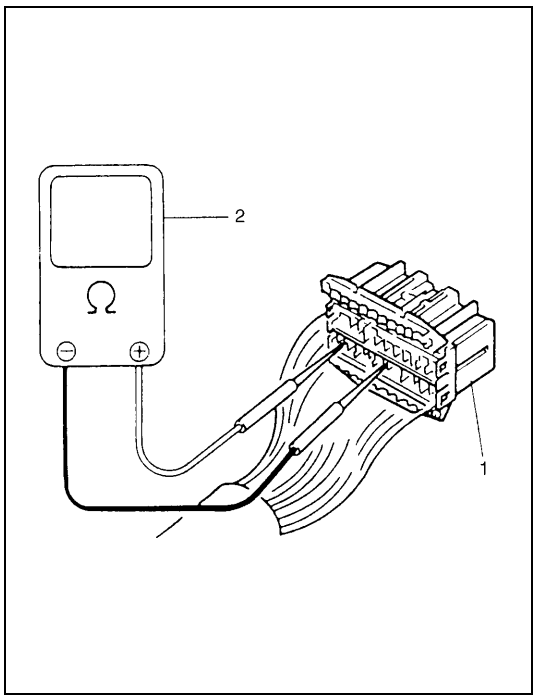

1) Disconnect ECM couplers from ECM with ignition switch OFF.

CAUTION:
Never touch terminals of ECM itself or connect voltmeter or ohmmeter.

2) Check resistance between each terminal of connectors disconnected.

CAUTION:
- **Be sure to connect ohmmeter probe from wire harness side of coupler.**
- **Be sure to turn OFF ignition switch for this check.**
- **Resistance in table below represents that when parts temperature is 20°C (68°F).**

1. ECM coupler disconnected
2. Ohmmeter

TERMINAL RESISTANCE TABLE

For TYPE A (Refer to NOTE in "ECM VOLTAGE VALUES TABLE" for applicable model)

TERMINALS	CIRCUIT	STANDARD RESISTANCE
C42-7 to G02-6	HO2S-1 heater (if equipped)	5.0 – 6.4 Ω
C41-4 to G02-6	HO2S-2 heater (if equipped)	12.0 – 14.3 Ω
C42-9 to C41-5/6	No.1 injector	11.3 – 13.8 Ω
C42-21 to C41-5/6	No.2 injector	11.3 – 13.8 Ω
C42-31 to C41-5/6	No.3 injector	11.3 – 13.8 Ω
C42-8 to C41-5/6	No.4 injector	11.3 – 13.8 Ω
C41-2 to C41-5/6	EGR valve (stepper motor coil 1) (if equipped)	20 – 24 Ω
C41-9 to C41-5/6	EGR valve (stepper motor coil 2) (if equipped)	20 – 24 Ω
C41-8 to C41-5/6	EGR valve (stepper motor coil 3) (if equipped)	20 – 24 Ω
C41-17 to C41-5/6	EGR valve (stepper motor coil 4) (if equipped)	20 – 24 Ω
C42-4 to C41-5/6	EVAP canister purge valve	30 – 34 Ω
C41-19 to G02-6	Fuel pump relay	56 – 146 Ω
C41-1 to Body ground	A/C compressor clutch	3 – 5.5 Ω
C41-18 to C41-5/6	Radiator fan control relay No.1	56 – 146 Ω
C41-10 to G02-17	Main relay	56 – 146 Ω
C42-1 to Body ground	Ground	Continuity
C42-2 to Body ground	Ground	Continuity
C42-3 to Body ground	Ground	Continuity

For TYPE B (Refer to NOTE in "ECM VOLTAGE VALUES TABLE" for applicable model.)

TERMINALS	CIRCUIT	STANDARD RESISTANCE
C42-7 to C41-11	HO2S-1 heater (if equipped)	5.0 – 6.4 Ω
C41-4 to C41-11	HO2S-2 heater (if equipped)	12.0 – 14.3 Ω
C42-9 to C41-5/6	No.1 injector	11.3 – 13.8 Ω
C42-21 to C41-5/6	No.2 injector	11.3 – 13.8 Ω
C42-31 to C41-5/6	No.3 injector	11.3 – 13.8 Ω
C42-8 to C41-5/6	No.4 injector	11.3 – 13.8 Ω
C42-18 to C41-5/6	EGR valve (stepper motor coil 1) (if equipped)	20 – 24 Ω
C42-29 to C41-5/6	EGR valve (stepper motor coil 2) (if equipped)	20 – 24 Ω
C42-17 to C41-5/6	EGR valve (stepper motor coil 3) (if equipped)	20 – 24 Ω
C42-28 to C41-5/6	EGR valve (stepper motor coil 4) (if equipped)	20 – 24 Ω
C42-4 to C41-5/6	EVAP canister purge valve	30 – 34 Ω
C41-19 to G02-6	Fuel pump relay	56 – 146 Ω
C41-1 to Body ground	A/C compressor clutch	3 – 5.5 Ω
C41-18 to C41-5/6	Radiator fan control relay No.1	56 – 146 Ω
C41-10 to C41-7	Main relay	56 – 146 Ω
C42-1 to Body ground	Ground	Continuity
C42-2 to Body ground	Ground	Continuity
C42-3 to Body ground	Ground	Continuity

COMPONENT LOCATION

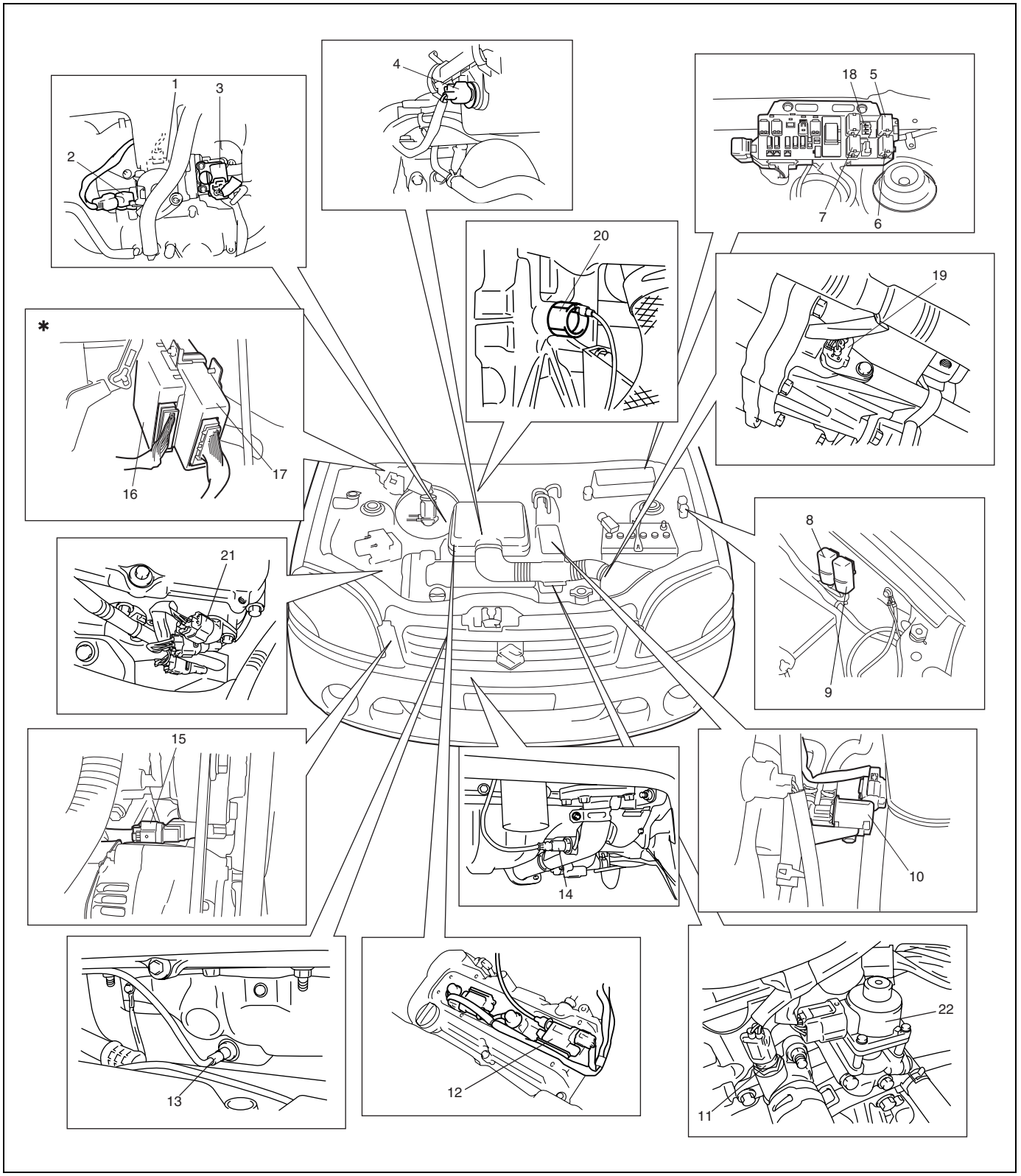

1. TP sensor	9. Radiator fan control relay No.3	17. ECM
2. MAP sensor	10. EVAP canister purge valve	18. Monitor connector
3. IAC valve	11. ECT sensor	19. VSS
4. IAT sensor	12. Ignition coil with igniter	20. Knock sensor (if equipped)
5. Radiator fan control relay No.1	13. HO2S-1 (if equipped)	21. CMP sensor
6. Main relay	14. HO2S-2 (if equipped)	22. EGR valve (if equipped)
7. Fuel pump relay	15. CKP sensor	✱: This figure shows left-hand steering vehicle, these parts are installed at the other side for right-hand steering vehicle.
8. Radiator fan control relay No.2	16. TCM	

TABLE A-1 MALFUNCTION INDICATOR LAMP CIRCUIT CHECK - LAMP DOES NOT COME "ON" AT IGNITION SWITCH ON (BUT ENGINE AT STOP)

WIRING DIAGRAM

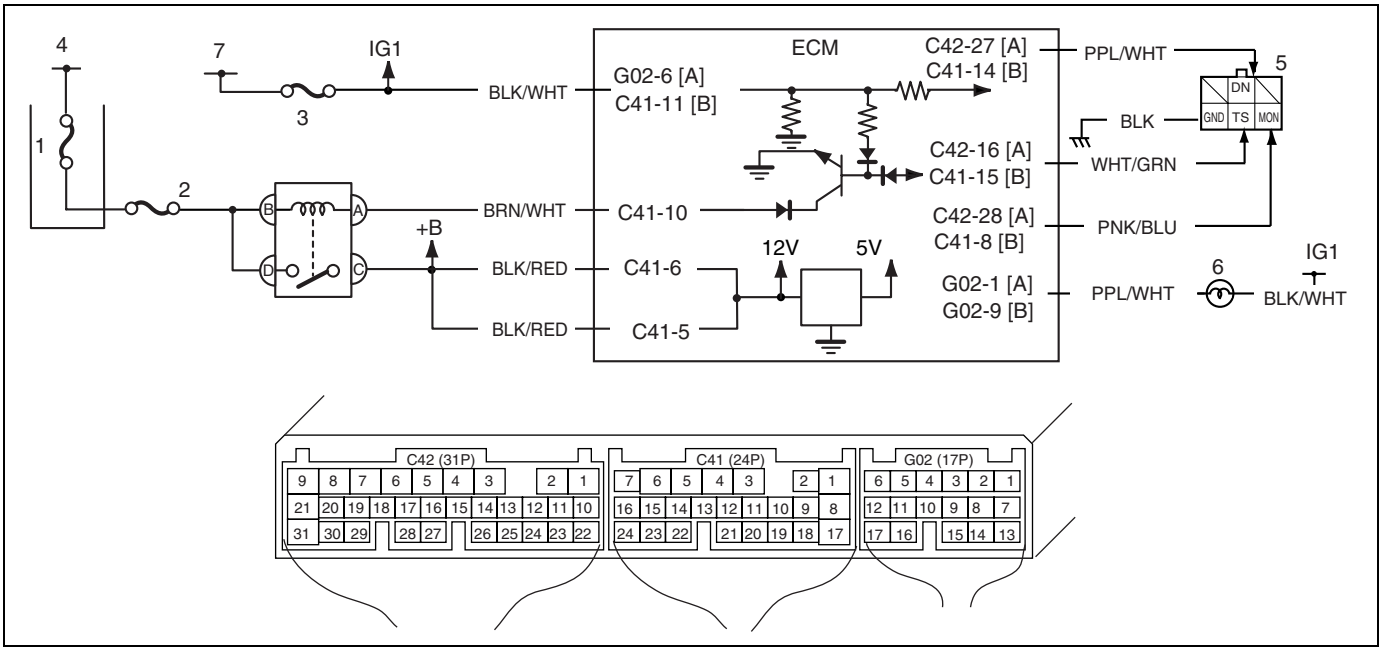

1. BATT fuse	3. IG METER fuse	5. Monitor connector	7. To ignition switch
2. Main fuse box	4. To battery	6. MIL	
[A] : Case of TYPE A is shown (See NOTE)	[B] : Case of TYPE B is shown (See NOTE)		

NOTE:

For TYPE A and TYPE B, refer to NOTE in "ECM VOLTAGE VALUES TABLE" for applicable model.

CIRCUIT DESCRIPTION

When the ignition switch is turned ON, ECM causes the main relay to turn ON (close the contact point). Then, ECM being supplied with the main power, turns ON the malfunction indicator lamp (MIL). When the engine starts to run and no malfunction is detected in the system, MIL goes OFF but if a malfunction was or is detected, MIL remains ON even when the engine is running.

INSPECTION

Step	Action	Yes	No
1	MIL Power Supply Check 1) Turn ignition switch ON. Do other indicator/warning lights in combination meter comes ON?	Go to Step 2.	"IG METER" fuse blown, main fuse blown, ignition switch malfunction, "BLK/WHT" circuit between "IG METER" fuse and combination meter or poor coupler connection at combination meter.
2	ECM Power and Ground Circuit Check Does engine start?	Go to Step 3.	Go to TABLE A-5 ECM POWER AND GROUND CIRCUIT CHECK. If engine is not cranked, go to DIAGNOSIS in Section 6G.

Step	Action	Yes	No
3	MIL Circuit Check 1) Turn ignition switch OFF and disconnect connectors from ECM. 2) Check for proper connection to ECM at terminal G02-1 (Case of TYPE A. See NOTE) or G02-9 (Case of TYPE B. See NOTE). 3) If OK, then using service wire, ground terminal G02-1 (Case of TYPE A. See NOTE) or G02-9 (Case of TYPE B. See NOTE) in connector disconnected. Does MIL turn on at ignition switch ON?	Substitute a known-good ECM and recheck.	Bulb burned out or “PPL/YEL” (Case of TYPE A. See NOTE) or “PPL/WHT” (Case of TYPE B. See NOTE) wire circuit open. Test switch terminal circuit grounded (vehicle without immobilizer indicator lamp)

TABLE A-2 MALFUNCTION INDICATOR LAMP CIRCUIT CHECK - LAMP REMAINS “ON” AFTER ENGINE STARTS

WIRING DIAGRAM / CIRCUIT DESCRIPTION

Refer to table A-1.

NOTE:

For TYPE A and TYPE B, refer to NOTE in “ECM VOLTAGE VALUES TABLE” for applicable model.

INSPECTION

Step	Action	Yes	No
1	Diagnostic Trouble Code (DTC) Check 1) Check DTC referring to DTC CHECK section. Is there any DTC(s)?	Go to Step 2 of ENGINE DIAG. FLOW TABLE.	Go to Step 2.
2	DTC Check 1) Start engine and recheck DTC while engine running. Is there any DTC(s)?		Go to Step 3.
3	MIL Circuit Check 1) Turn OFF ignition switch. 2) Disconnect connectors from ECM. Does MIL turn ON at ignition switch ON?	“PPL/YEL” (Case of TYPE A. See NOTE) or “PPL/WHT” (Case of TYPE B. See NOTE) wire circuit shorted to ground.	Substitute a known-good ECM and recheck.

TABLE A-3 MIL CHECK - MIL FLASHES AT IGNITION SWITCH ON (VEHICLE WITHOUT IMMOBILIZER INDICATOR LAMP)

WIRING DIAGRAM / CIRCUIT DESCRIPTION

Refer to TABLE A-1.

NOTE:

For TYPE A and TYPE B, refer to NOTE in "ECM VOLTAGE VALUES TABLE" for applicable model.

INSPECTION

Step	Action	Yes	No
1	MIL Flashing Pattern Check 1) Turn ignition switch ON. Does lamp flashing pattern indicate diagnostic trouble code?	Go to Step 2.	Substitute a known-good ECM and recheck.
2	Diag. Switch Circuit Check Is diag. switch terminal connected to ground via service wire?	System is in good condition.	"PPL/WHT" circuit for monitor connector shorted to ground. If circuit is OK substitute a known-good ECM and recheck.

TABLE A-4 MIL CHECK - MIL DOES NOT FLASH OR JUST REMAINS ON EVEN WITH GROUNDING DIAGNOSIS SWITCH TERMINAL (VEHICLE WITHOUT IMMOBILIZER INDICATOR LAMP)

WIRING DIAGRAM / CIRCUIT DESCRIPTION

Refer to TABLE A-1.

NOTE:

For TYPE A and TYPE B, refer to NOTE in "ECM VOLTAGE VALUES TABLE" for applicable model.

INSPECTION

Step	Action	Yes	No
1	MIL Circuit Check 1) Turn ignition switch OFF and disconnect connectors from ECM. Does MIL turn ON at ignition switch ON?	"PPL/YEL" (Case of TYPE A. See NOTE) or "PPL/WHT" (Case of TYPE B. See NOTE) circuit shorted to ground.	Go to Step 2.
2	ECM/PCM Connection Check 1) Turn ignition switch OFF. Is connector (C42-27 (Case of TYPE A. See NOTE) or C41-14 (Case of TYPE B. See NOTE) connection) connected to ECM/PCM properly?	Go to Step 3.	Poor connector connection.
3	Diag. Switch Terminal Circuit Check 1) Connect connectors to ECM. 2) Using service wire, ground C42-27 (Case of TYPE A. See NOTE) or C41-14 (Case of TYPE B. See NOTE) connection) terminal with connectors connected to ECM. 3) Turn ignition switch ON. Does MIL flash?	"PPL/WHT" or "BLK" circuit in monitor connector is open.	Substitute a known-good ECM and recheck.

TABLE A-5 ECM POWER AND GROUND CIRCUIT CHECK - MIL DOESN'T LIGHT AT IGNITION SWITCH ON AND ENGINE DOESN'T START THOUGH IT IS CRANKED UP

WIRING DIAGRAM

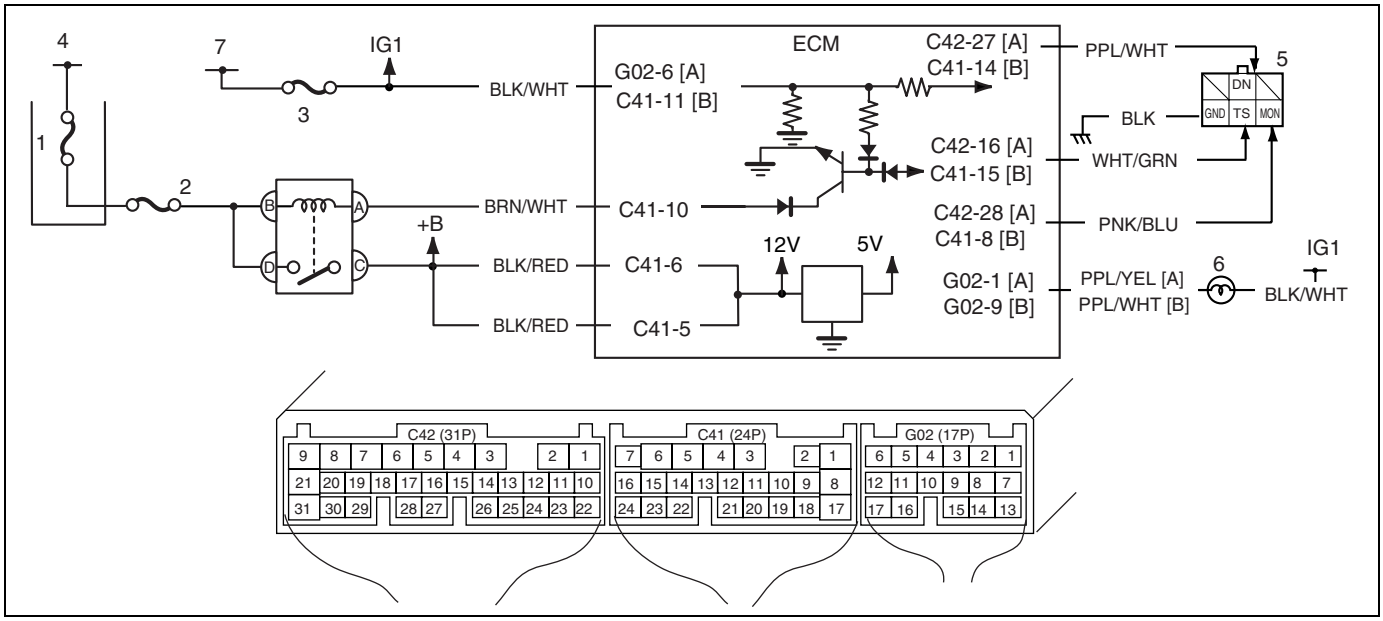

1. BATT fuse	3. IG METER fuse	5. Monitor connector
2. Main fuse box	4. To battery	6. MIL (if equipped)
[A] : Case of TYPE A is shown (See NOTE)	[B] : Case of TYPE B is shown (See NOTE)	

NOTE:

For TYPE A and TYPE B, refer to NOTE in "ECM VOLTAGE VALUES TABLE" for applicable model.

CIRCUIT DESCRIPTION

When the ignition switch tuned ON, the main relay turns ON (the contact point closes) and the main power is supplied to ECM.

INSPECTION

Step	Action	Yes	No
1	Main Relay Operating Sound Check Is operating sound of main relay heard at ignition switch ON?	Go to Step 5.	Go to Step 2.
2	Main Relay Check 1) Turn OFF ignition switch and remove main relay (1). 2) Check for proper connection to main relay (1). 3) Check resistance between each two terminals. See Fig. 1 and 2. Between terminals C and D : Infinity Between terminals A and B : 56 – 146 Ω 4) Check that there is continuity between terminals C and D when battery is connected to terminals A and B. See Fig. 3. Is main relay in good condition?	Go to Step 3.	Replace main relay.
3	Fuse Check Is main fuse in good condition? See Fig. 4.	Go to Step 4.	Check for short in circuits connected to this fuse.
4	ECM Power Circuit Check 1) Turn OFF ignition switch, disconnect connectors from ECM and install main relay. 2) Check for proper connection to ECM at terminals G02-6 (Case of TYPE A. See NOTE) or C41-11 (Case of TYPE B. See NOTE), C41-10, C41-5 and C41-6. 3) If OK, then measure voltage between terminal G02-6 (Case of TYPE A. See NOTE) or C41-11 (Case of TYPE B. See NOTE) and ground, C41-10 and ground with ignition switch ON. Is each voltage 10 – 14 V?	Go to Step 5.	"BLK/WHT", "BLK/YEL" or "BRN/WHT" circuit open.
5	ECM Power Circuit Check 1) Using service wire, ground terminal C41-10 and measure voltage between terminal C41-5 and ground at ignition switch ON. Is it 10 – 14 V?	Check ground circuits "BRN/WHT" and "BLK/YEL" for open. If OK, then substitute a known-good ECM and recheck.	Go to Step 6.
6	Is operating sound of main relay heard in Step 1?	Go to Step 7.	"BLK/YEL" or "BLK/RED" wire open.
7	Main relay check 1) Check main relay according to procedure in Step 2. Is main relay in good condition?	"BLK/YEL" or "BLK/RED" wire open.	Replace main relay.

Fig. 1 for Step 2

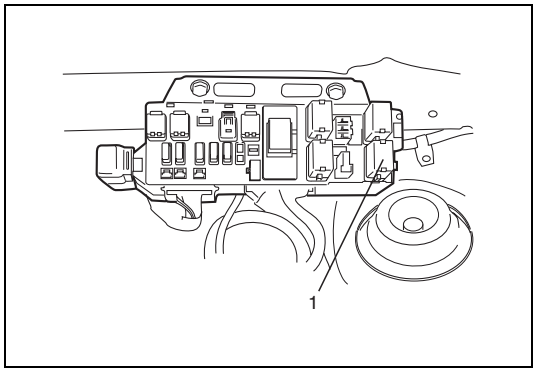

1. Main relay

Fig. 2 for Step 2

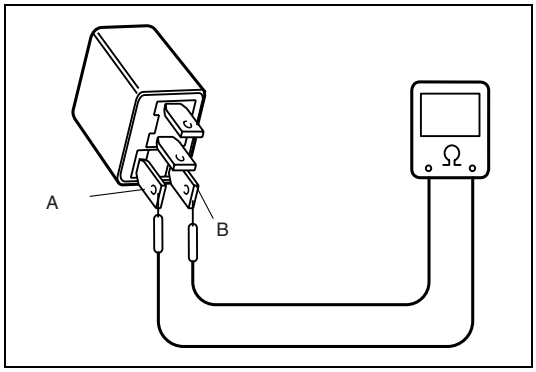

Fig. 3 for Step 2

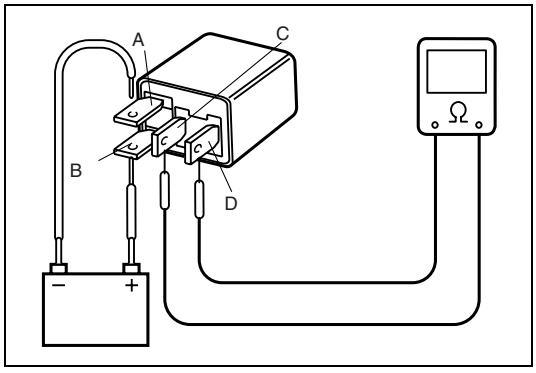

Fig. 4 for Step 3

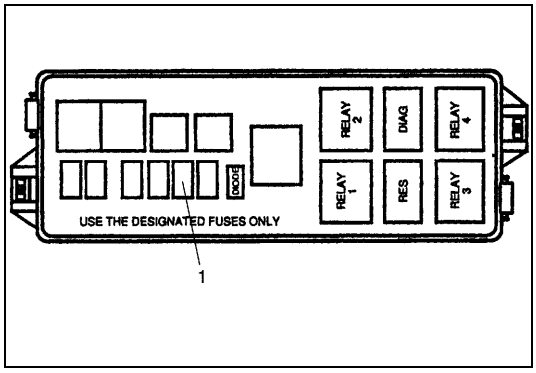

1. Fuse

DTC P0105 (DTC NO.11) MANIFOLD ABSOLUTE PRESSURE (MAP) CIRCUIT MALFUNCTION

WIRING DIAGRAM / CIRCUIT DESCRIPTION

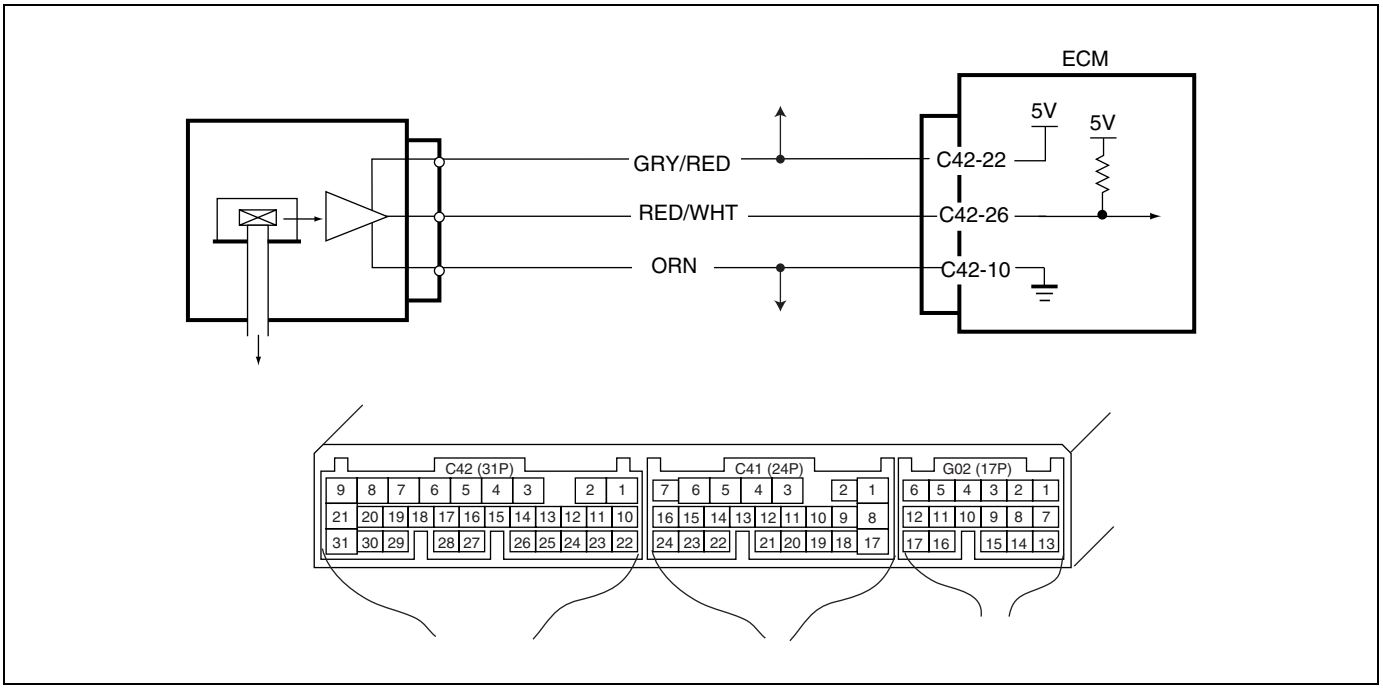

DTC DETECTING CONDITION	POSSIBLE CAUSE
• MAP sensor signal is 0.19 V or lower (Low pressure – High vacuums – Low voltage) or • MAP sensor signal is 4.5 V or higher (High pressure – Low vacuums – High voltage)	• "ORN" circuit open • "GRY/RED" circuit open or shorted to ground • "RED/WHT" circuit open or shorted to ground • MAP sensor malfunction • ECM malfunction

NOTE:

- **When this DTC and DTC P0120 (No.13) are indicated together, it is possible that "GRY/RED" circuit is open.**
- **When DTC P0105 (No.11), P0110 (No.18), P0115 (No.19) and P0120 (No.13) are indicated together, it is possible that "ORN" circuit is open.**

DTC CONFIRMATION PROCEDURE

1) Clear DTC, start engine and keep it at idle for 1 min.
2) Select "DTC" mode on scan tool and check DTC.

MAP SENSOR INDIVIDUAL CHECK

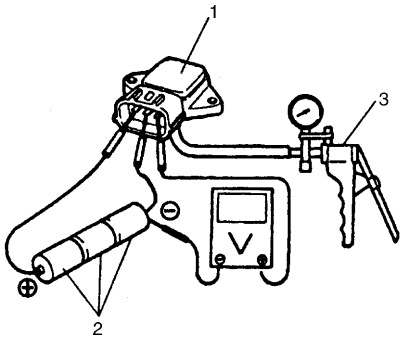

1) Disconnect connector from MAP sensor (1).
2) Remove MAP sensor (1).
3) Arrange 3 new 1.5 V batteries (2) in series (check that total voltage is 4.5 – 5.0 V) and connect its positive terminal to "Vin" terminal of sensor and negative terminal to "Ground" terminal. Then check voltage between "Vout" and "Ground". Also, check if voltage reduces when vacuum is applied up to 400 mmHg by using vacuum pump (3).

Output voltage (When input voltage is 4.5 – 5.5 V, ambient temp. 20 – 30°C, 68 – 86°F)

ALTITUDE (Reference)		BAROMETRIC PRESSURE		OUTPUT VOLTAGE
(ft)	(m)	(mmHg)	(kPa)	(V)
0 | 2 000	0 | 610	760 | 707	100 | 94	3.3 – 4.3
2 001 | 5 000	611 | 1 524	Under 707 over 634	94 | 85	3.0 – 4.1
5 001 | 8 000	1 525 | 2 438	Under 634 over 567	85 | 76	2.7 – 3.7
8 001 | 10 000	2 439 | 3 048	Under 567 over 526	76 | 70	2.5 – 3.3

If check result is not satisfactory, replace MAP sensor (1).

4) Install MAP sensor (1) securely.
5) Connect MAP sensor (1) connector securely.

INSPECTION

Step	Action	Yes	No
1	Was "ENGINE DIAG. FLOW TABLE" performed?	Go to Step 2.	Go to "ENGINE DIAG. FLOW TABLE".
2	Check MAP Sensor and Its Circuit. 1) Connect scan tool to DLC with ignition switch OFF. 2) Turn ignition switch ON. 3) Check intake manifold pressure. See Fig. 1. Is it 114 kPa or more or 43 kPa or less?	Go to Step 3.	Intermittent trouble. Check for intermittent referring to "Intermittent and Poor Connection" in Section 0A.

Step	Action	Yes	No
3	Check Wire Harness. 1) Disconnect MAP sensor connector with ignition switch OFF. 2) Check for proper connection of MAP sensor at “RED/WHT” and “GRY/RED” wire terminals. 3) If OK, then with ignition switch ON, check voltage between each of “GRY/RED” or “RED/WHT” wire terminals and body ground. See Fig. 2. Is voltage about 4 – 6 V at each terminal?	Go to Step 4.	“GRY/RED” wire open or shorted to ground circuit or shorted to power circuit (See NOTE), “RED/WHT” wire open or shorted to ground, poor C42-26 connection or C42-22 connection. If wire and connection are OK, confirm that MAP sensor is normal and then substitute a known-good ECM and recheck.
4	Check MAP sensor. Check MAP sensor according to “MAP Sensor Individual Check” mentioned previously. Is it in good condition?	“GRY/RED” wire shorted to “ORN” wire, “RED/WHT” wire open, poor C42-10 connection. If wire and connection are OK, substitute a known-good ECM and recheck.	Replace MAP sensor.

NOTE:

When battery voltage is applied to “GRY/RED” wire, it is possible that MAP sensor is also faulty.

Fig. 1 for Step 2

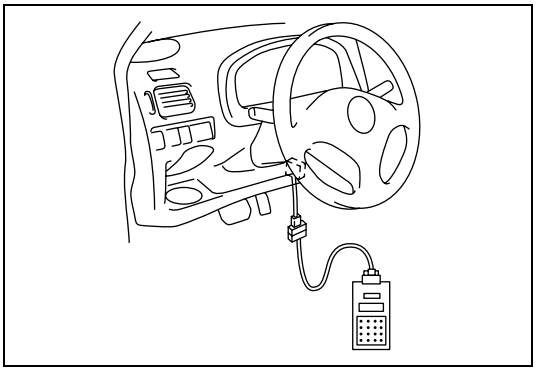

Fig. 2 for Step 3

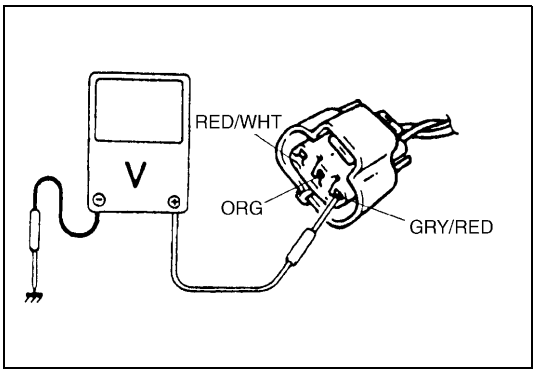

DTC P0110 (DTC NO.18) INTAKE AIR TEMP. (IAT) CIRCUIT MALFUNCTION

WIRING DIAGRAM / CIRCUIT DESCRIPTION

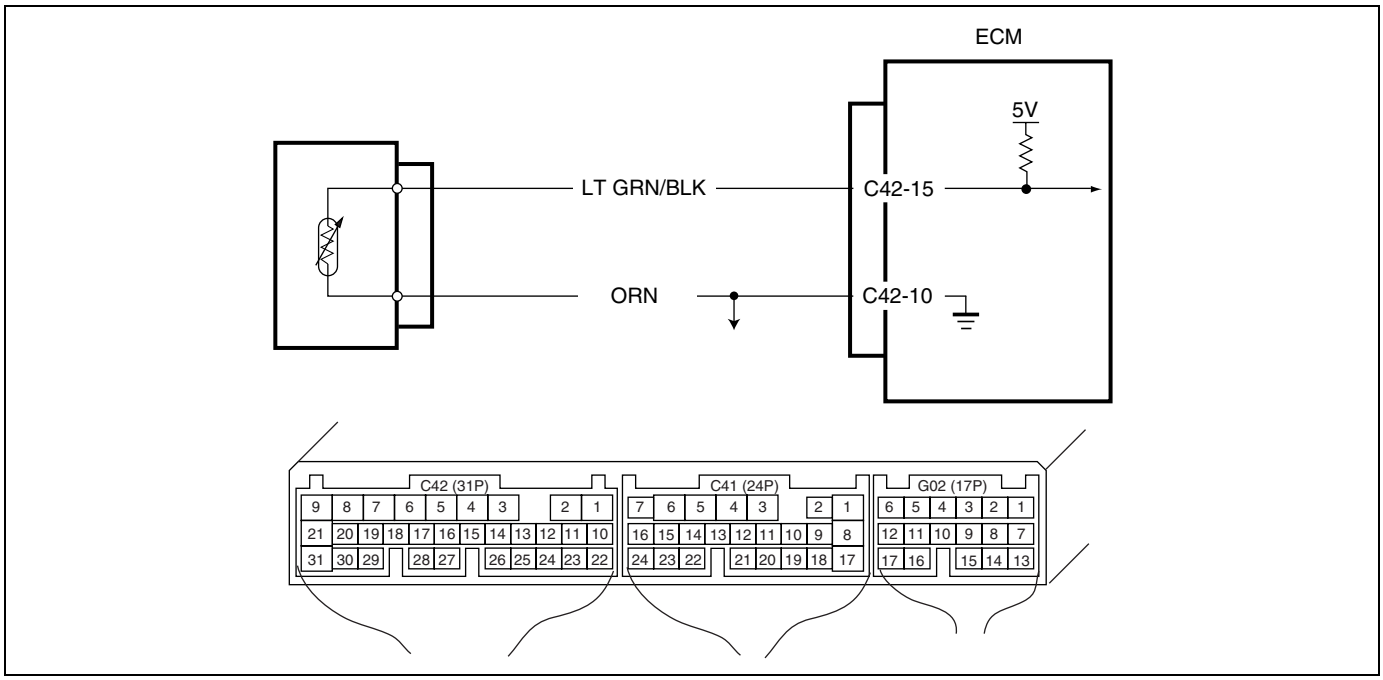

DTC DETECTING CONDITION	POSSIBLE CAUSE
• Low intake air temperature (High voltage-High resistance) or • High intake air temperature (Low voltage-Low resistance)	• "LT GRN/BLK" circuit open or shorted to power. • "ORN" circuit open • IAT sensor malfunction • ECM malfunction

NOTE:

- **When DTC P0105 (No.11), P0110 (No.18), P0115 (No.19) and P0120 (No.13) are indicated together, it is possible that "ORN" circuit is open.**
- **Before inspecting, be sure to check that ambient temperature is higher than – 40°C (– 40°F).**

DTC CONFIRMATION PROCEDURE

1) Clear DTC, start engine and keep it at idle for 1 min.
2) Select "DTC" mode no scan tool and check DTC.

INSPECTION

Step	Action	Yes	No
1	Was "ENGINE DIAG. FLOW TABLE" performed?	Go to Step 2.	Go to "ENGINE DIAG. FLOW TABLE".
2	Check IAT Sensor and Its Circuit. 1) Connect scan tool to DLC with ignition switch OFF. 2) Turn ignition switch ON. 3) Check intake air temp. displayed on scan tool. See Fig. 1. Is – 40°C (– 40°F) or 119°C (246°F) indicated?	Go to Step 3.	Intermittent trouble. Check for intermittent referring to "Intermittent and Poor Connection" in Section 0A.

Step	Action	Yes	No
3	Check Wire Harness. 1) Disconnect IAT sensor connector with ignition switch OFF. 2) Check for proper connection to IAT sensor at “LT GRN/BLK” and “ORN” wire terminals. 3) If OK, then with ignition switch ON, is voltage applied to “LT GRN/BLK” wire terminal about 4 – 6 V? See Fig. 2.	Go to Step 5.	“LT GRN/BLK” wire open or shorted to power, or poor C42-15 connection. If wire and connection are OK, substitute a known-good ECM and recheck.
4	Does scan tool indicate – 40°C (– 40°F) at Step 2.	Go to Step 6.	Go to Step 5.
5	Check Wire Harness 1) Check intake air temp. displayed on scan tool with ignition switch ON. Is – 40°C (– 40°F) indicated?	Replace IAT sensor.	“LT GRN/BLK” wire shorted to ground. If wire is OK, substitute a known-good ECM and recheck.
6	Check Wire Harness. 1) Using service wire, connect IAT sensor connector terminals. 2) Check intake air temp. displayed on scan tool with ignition switch ON. See Fig. 3. Is 119°C (246°F) indicated?	Replace IAT sensor.	“LT GRN/BLK” wire open or poor C42-10 connection. If wire and connection are OK, substitute a known-good ECM and recheck.

Fig. 1 for Step 2

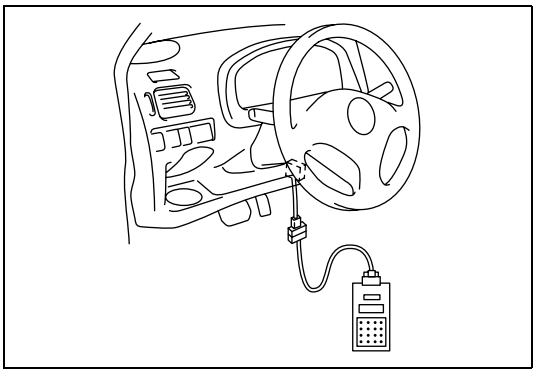

Fig. 2 for Step 3

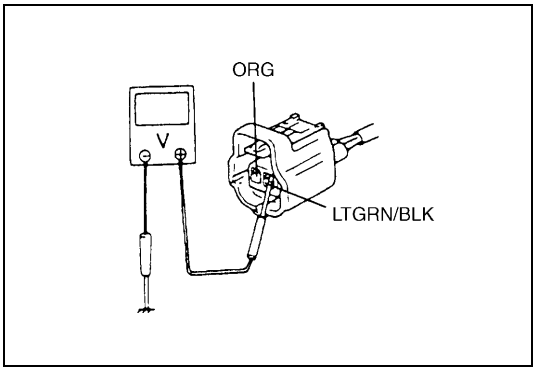

Fig. 3 for Step 4

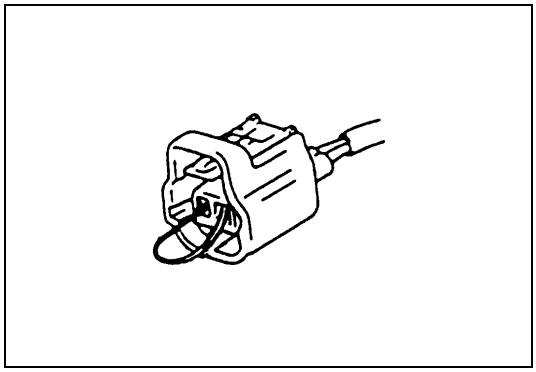

DTC P0115 (DTC NO.19) ENGINE COOLANT TEMPERATURE (ECT) CIRCUIT MALFUNCTION

WIRING DIAGRAM / CIRCUIT DESCRIPTION

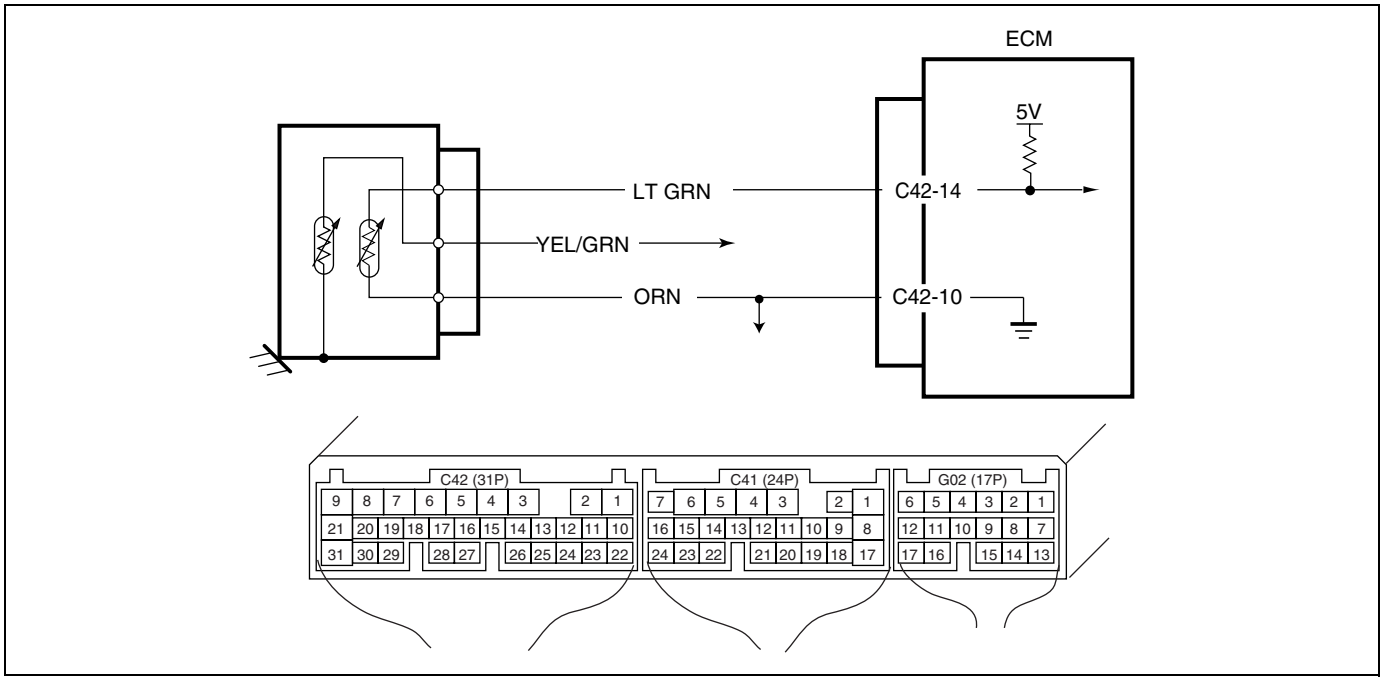

DTC DETECTING CONDITION	POSSIBLE CAUSE
• Low engine coolant temperature (High voltage-High resistance) or • High engine coolant temperature (Low voltage-Low resistance)	• "LT GRN" circuit open or shorted to power • "ORN" circuit open • ECT sensor malfunction • ECM malfunction

NOTE:

- **Before inspecting, be sure to check that coolant temp. meter in combination meter indicates normal operating temperature (Engine is not overheating).**
- **When this DTC and P1709 are stored together, also clear DTC stored in TCM after completion of repair.**
- **When DTC P0105 (No.11), P0110 (No.18), P0115 (No.19) and P0120 (No.13) are indicated together, it is possible that "ORN" circuit open.**

DTC CONFIRMATION PROCEDURE

1) Clear DTC, start engine and keep it at idle for 1 min.
2) Select “DTC” mode no scan tool and check DTC.

INSPECTION

Step	Action	Yes	No
1	Was “ENGINE DIAG. FLOW TABLE” performed?	Go to Step 2.	Go to “ENGINE DIAG. FLOW TABLE”.
2	Check ECT Sensor and its Circuit. 1) Connect scan tool with ignition switch OFF. 2) Turn ignition switch ON. 3) Check engine coolant temp. displayed on scan tool. See Fig. 1. Is – 40°C (– 40°F) or 119°C (246°F) indicated?	Go to Step 3.	Intermittent trouble. Check for intermittent referring to “Intermittent and Poor Connection” in Section 0 A.
3	Check Wire Harness. 1) Disconnect ECT sensor connector. 2) Check engine coolant temp. displayed on scan tool. Is – 40°C (– 40°F) indicated?	Replace ECT sensor.	“LT GRN” wire shorted to ground. If wire is OK, substitute a known-good ECM and recheck.
4	Does scan tool indicate – 40°C (– 40°F) at Step 2.	Go to Step 6.	Go to Step 5.
5	Check Wire Harness. 1) Disconnect ECT sensor connector with ignition switch OFF. 2) Check for proper connection to ECT sensor at “ORN” and “LT GRN” wire terminals. If OK, then with ignition switch ON, is voltage applied to “LT GRN” wire terminal about 4 – 6 V? See Fig. 2.	Go to Step 4.	“LT GRN” wire open or shorted to power, or poor C42-14 connection. If wire and connection are OK, substitute a known-good ECM and recheck.
6	Check Wire Harness. 1) Using service wire, connect ECT sensor connector terminals. See Fig. 3. 2) Turn ignition switch ON and check engine coolant temp. displayed on scan tool. Is 119°C (246°F) indicated?	Replace ECT sensor.	“ORN” wire open or poor C42-10 connection. If wire and connection are OK, substitute a known-good ECM and recheck.

Fig. 1 for Step 2

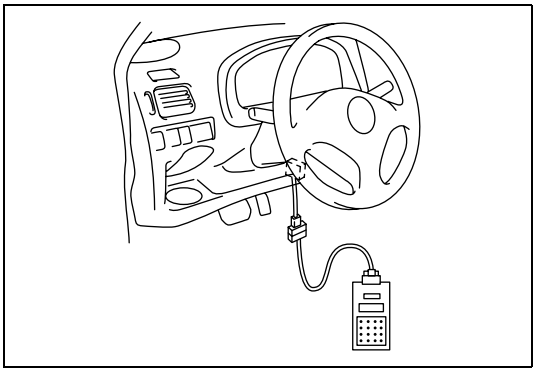

Fig. 2 for Step 3

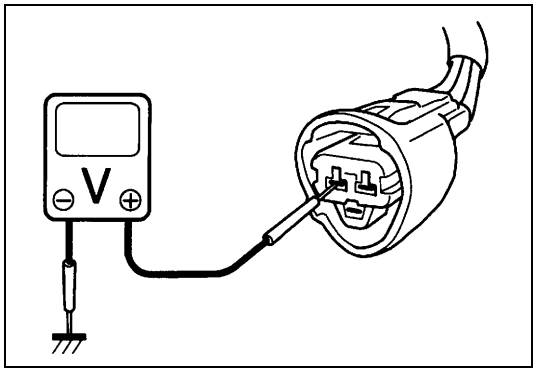

Fig. 3 for Step 4

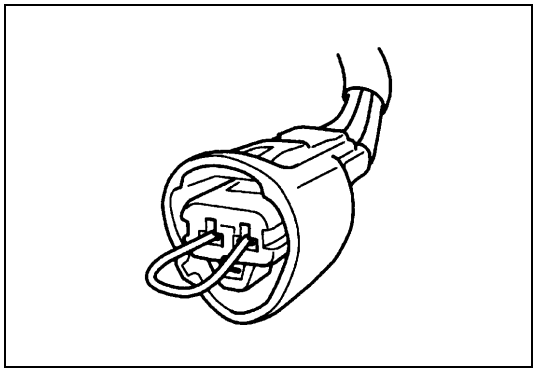

DTC P0120 (DTC NO.13) THROTTLE POSITION CIRCUIT MALFUNCTION

WIRING DIAGRAM / CIRCUIT DESCRIPTION

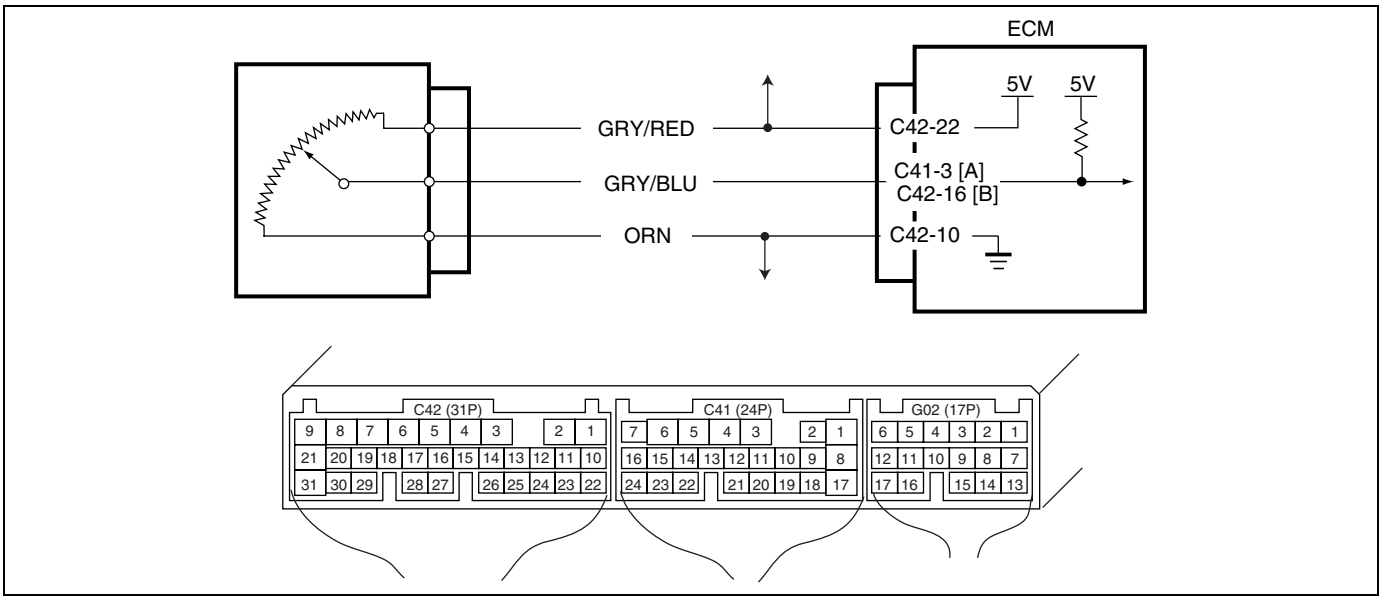

[A] : Case of TYPE A is shown (See NOTE)	[B] : Case of TYPE B is shown (See NOTE)

DTC DETECTING CONDITION	POSSIBLE CAUSE
• Signal voltage high or • Signal voltage low	• "ORN" circuit open • "GRY/BLU" circuit open or shorted to ground • "GRY/RED" circuit open or shorted to power or ground • TP sensor malfunction • ECM malfunction

NOTE:

- **For TYPE A and TYOE B, refer to NOTE in "ECM VOLTAGE VALUES TABLE" for applicable model.**
- **When DTC P0105 (No.11), P0110 (No.18), P0115 (No.19) and P0120 (No.13) are indicated together, it is possible that "ORN" or "GRY/RED" circuit is open.**
- **When this DTC and P1700 are stored together, also clear DTC stored in TCM after completion of repair.**
- **When this DTC and DTC P0105 (No.11) are indicated together, it is possible that "GRY/RED" circuit is open.**

DTC CONFIRMATION PROCEDURE

1) Clear DTC, start engine and keep it at idle for 1 min.
2) Select "DTC" mode no scan tool and check DTC.

INSPECTION

Step	Action	Yes	No
1	Was “ENGINE DIAG. FLOW TABLE” performed?	Go to Step 2.	Go to “ENGINE DIAG. FLOW TABLE”.
2	Check TP Sensor and Its Circuit. 1) Connect scan tool to DLC with ignition switch OFF and then turn ignition switch ON. 2) Check throttle valve opening percentage displayed on scan tool. See Fig. 1. Is it displayed 2% or less? 3) Check throttle valve opening percentage displayed on scan tool while opening throttle valve from idle position to full open position. See Fig. 1. Is it displayed 96% or higher?	Go to Step 3.	Intermittent trouble. Check for intermittent referring to “Intermittent and Poor Connection” in Section 0 A.
3	Check Wire Harness. 1) Disconnect connector from TP sensor with ignition switch OFF. 2) Check for proper connection to TP sensor at “GRY/RED”, “GRY/BLU” and “ORN” wire terminals. 3) If OK, then with ignition switch ON, check voltage between each of “GRY/RED” or “GRY/BLU” wire terminals and body ground. See Fig. 2. Is voltage about 4 – 6 V at each terminal?	Go to Step 4.	“GRY/RED” wire open, “GRY/RED” wire shorted to ground circuit or power circuit or “GRY/BLU” wire, “ORN” wire open or shorted to ground circuit or poor C42-22 or C41-3 (For TYPE A, See NOTE) or C42-16 (For TYPE B, See NOTE) connection. If wire and connection are OK, substitute a known-good ECM and recheck.
4	Check TP Sensor. 1) Check resistance between terminals of TP sensor. See Fig. 3. Between 1 and 2 : 2.5 – 6.0 kΩ Between 1 and 3 : 100 Ω – 20 kΩ varying according to throttle valve opening Are measured values within specifications?	“ORN” wire open or poor C42-10 connection. If wire and connection are OK, substitute a known-good ECM and recheck.	Replace TP sensor.

Fig. 1 for Step 2

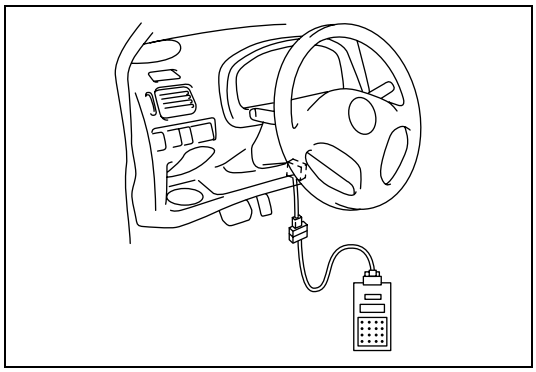

Fig. 2 for Step 3

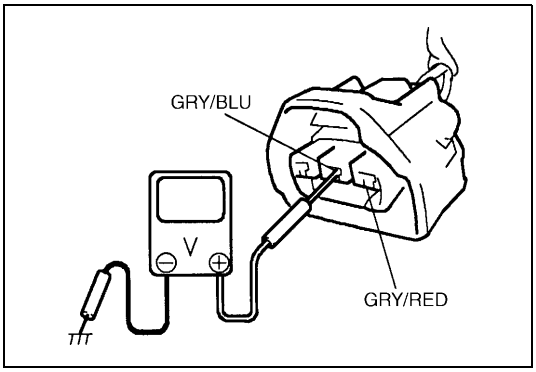

Fig. 3 for Step 4

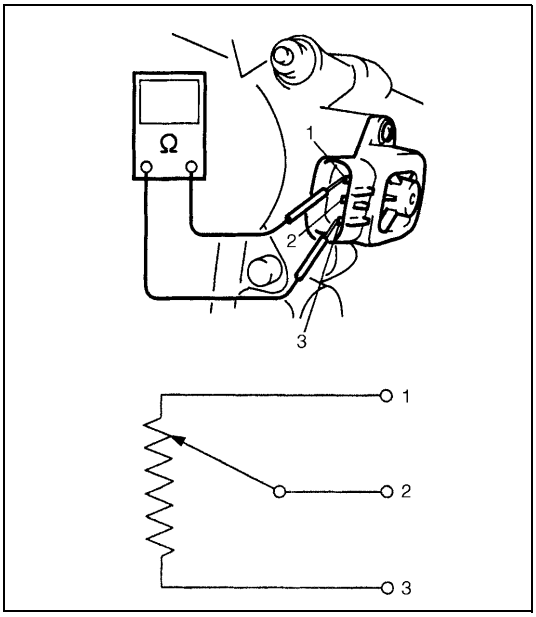

DTC P0121 THROTTLE POSITION CIRCUIT RANGE/PERFORMANCE PROBLEM

WIRING DIAGRAM / CIRCUIT DESCRIPTION

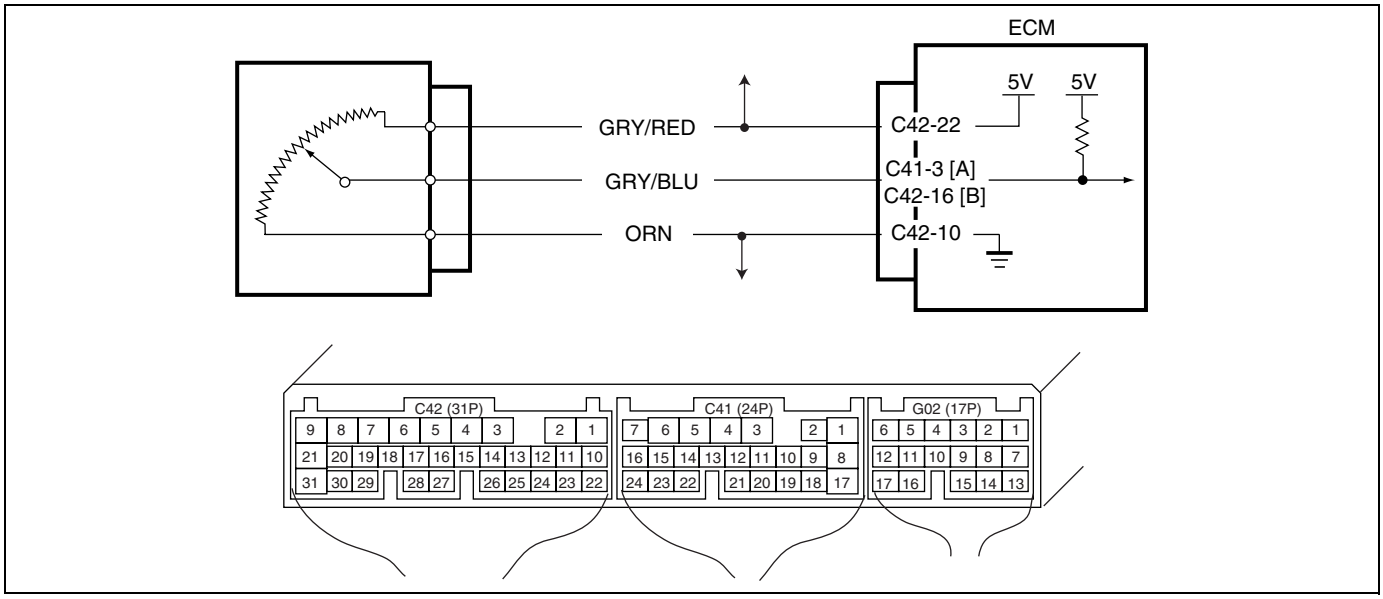

[A] : Case of TYPE A is shown (See NOTE)	[B] : Case of TYPE B is shown (See NOTE)

NOTE:

For TYPE A and TYPE B, refer to NOTE in "ECM VOLTAGE VALUES TABLE" for applicable model.

DTC DETECTING CONDITION	POSSIBLE CAUSE
• DTC will set when the following conditions are detected. • After engine warmed up. • While vehicle running at specified engine speed. • No change in intake manifold pressure (constant throttle opening) • Difference between actual throttle opening (detected from TP sensor) and opening calculated by ECM (Obtained on the basis of engine speed and intake manifold pressure) in larger than specified value. ✱2 driving cycle detection logic, continuous monitoring	• TP sensor malfunction • High resistance in the circuit • ECM malfunction

DTC CONFIRMATION PROCEDURE

WARNING:

- **When performing a road test, select a place where there is no traffic or possibility of a traffic accident and be very careful during testing to avoid occurrence of an accident.**
- **Road test should be carried out with 2 persons, a driver and a tester, on a level road.**

1) Turn ignition switch OFF. Clear DTC with ignition switch ON, check vehicle and environmental condition for :
   – Altitude (barometric pressure) : 2400 m, 8000 ft or less (560 mmHg, 75 kPa or more)
   – Ambient temp. : –10°C, 14°F or higher
   – Intake air temp. : 70°C, 158°F or lower
   – Engine coolant temp. : 70 – 110°C, 158 – 230°F
2) Warm up engine to normal operating temperature.
3) Increase vehicle speed to 30 – 40 mph, 50 – 60 km/h in 3rd gear or "D" range and hold throttle valve at that opening position for 1 min.
4) Stop vehicle.
5) Check DTC in "DTC" mode and pending DTC in "ON BOARD TEST" or "PENDING DTC" mode.

INSPECTION

Step	Action	Yes	No
1	Was “ENGINE DIAG. FLOW TABLE” performed?	Go to Step 2.	Go to “ENGINE DIAG. FLOW TABLE”.
2	Is SUZUKI scan tool available?	Go to Step 3.	Go to Step 4.
3	Check TP Sensor and its Circuit. 1) Turn ignition switch OFF and connect SUZUKI scan tool to DLC. 2) Turn ignition switch ON and check TP sensor output voltage when throttle valve is at idle position and fully opened. See Fig. 1 and 3. Dose voltage vary within specified value linearly as shown in figure?	If voltmeter was used, check terminal C41-3 (For TYPE A, See NOTE) or C42-16 (For TYPE B, See NOTE) for poor connection. If OK, substitute a known-good ECM and recheck.	Go to Step 5.
4	Check TP Sensor and Its Circuit. 1) Turn ignition switch ON. 2) Check voltage at terminal C41-3 (For TYPE A, See NOTE) or C42-16 (For TYPE B, See NOTE) of ECM connector connected, when throttle valve is at idle position and fully opened. See Fig. 2 and 3. Dose voltage vary within specified value linearly as shown in figure?	If voltmeter was used, check terminal C41-3 (For TYPE A, See NOTE) or C42-16 (For TYPE B, See NOTE) for poor connection. If OK, substitute a known-good ECM and recheck.	Go to Step 5.
5	Check TP Sensor. 1) Turn ignition switch OFF. 2) Disconnect TP sensor connector. 3) Check for proper connection to TP sensor at each terminal. 4) If OK, then measure resistance between terminals and check if each measured value is as specified below. See Fig. 4. Between 1 and 2 : 4.0 – 6.0 kΩ Between 1 and 3 : 0.02 – 6.0 kΩ, varying according to throttle valve opening. Are measured values as specified?	High resistance in “GRY/RED”, “GRY/BLU” or “ORN” circuit. If wire and connection are OK, substitute a known-good ECM and recheck.	Replace TP sensor.

Fig. 1 for Step 3

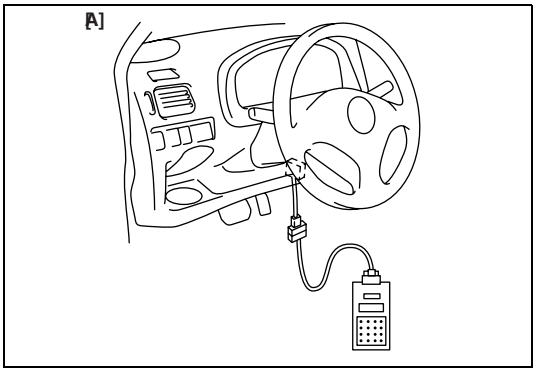

[A] : When using SUZUKI scan tool:

Fig. 2 for Step 4

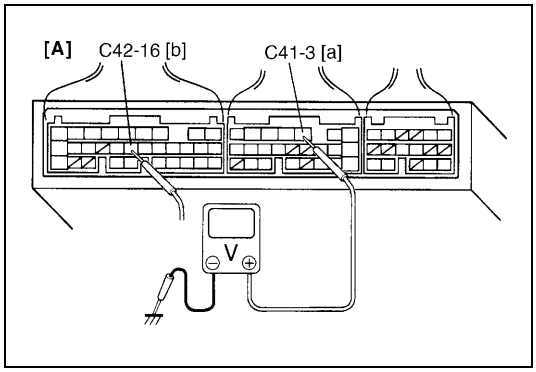

[A] :	When not using SUZUKI scan tool:
[a] :	Case of TYPE A is shown (See NOTE)
[b] :	Case of TYPE B is shown (See NOTE)

Fig. 3 for Step 3 and 4

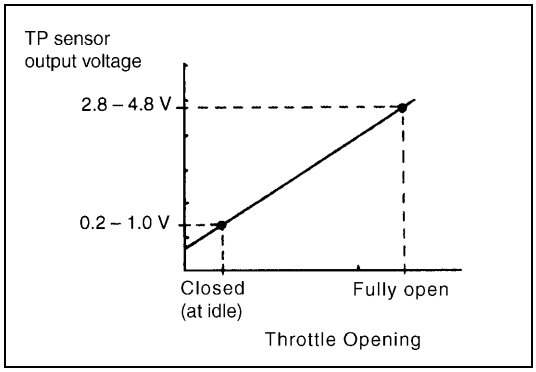

Fig. 4 for Step 5

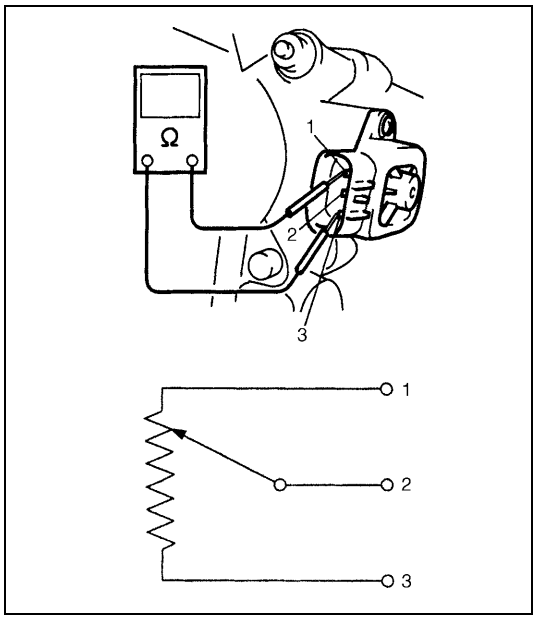

DTC P0130 (DTC NO.14) HEATED OXYGEN SENSOR (HO2S) CIRCUIT MALFUNCTION (SENSOR-1)

WIRING DIAGRAM / CIRCUIT DESCRIPTION

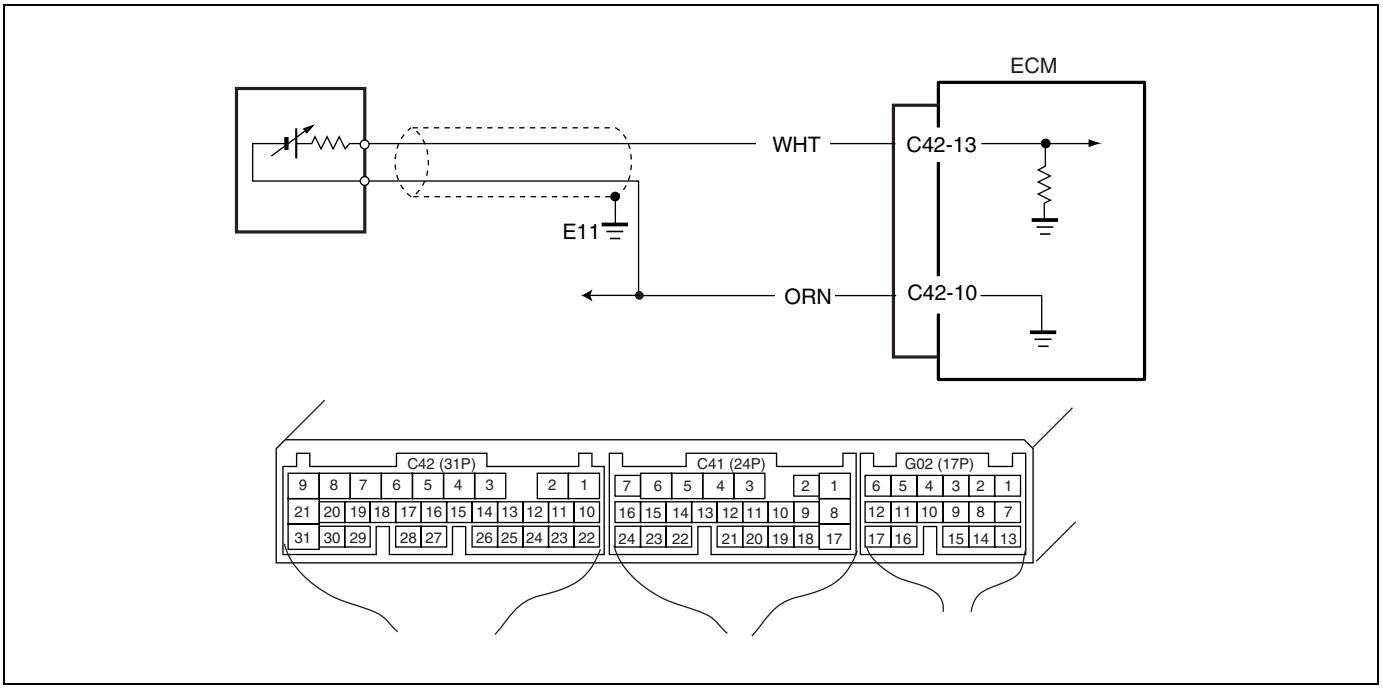

DTC DETECTING CONDITION	POSSIBLE CAUSE
• When running at idle speed after engine warmed up and running at specified vehicle speed, HO2S-1 output voltage does not go below 0.3 V or over 0.6 V. ✱2 driving cycle detection logic, Monitoring once/1 driving.	• Heated oxygen sensor-1 malfunction • "WHT" or "ORN" circuit open (poor connection) or short

DTC CONFIRMATION PROCEDURE

WARNING:

- **When performing a road test, select a place where there is no traffic or possibility of a traffic accident and be very careful during testing to avoid occurrence of an accident.**
- **Road test should be carried out with 2 persons, a driver and a tester.**

1) Turn ignition switch OFF. Clear DTC with ignition switch ON, check vehicle and environmental condition for :
   – Altitude (barometric pressure) : 2400 m, 8000 ft or less (560 mmHg, 75 kPa or more)
   – Ambient temp. : –10°C, 14°F or higher
   – Intake air temp. : 70°C, 158°F or lower
2) Warm up engine to normal operating temperature.
3) Drive vehicle at 30 – 40 mph, 50 – 60 km/h for 2 min.
4) Stop vehicle and run engine at idle for 2 min.
5) Check DTC in "DTC" mode and pending DTC in "ON BOARD TEST" or "PENDING DTC" mode.

INSPECTION

Step	Action	Yes	No
1	Was “ENGINE DIAG. FLOW TABLE” performed?	Go to Step 2.	Go to “ENGINE DIAG. FLOW TABLE”.
2	Is there DTC(s) other than HO2S-1 (DTC P0130)?	Go to applicable DTC Diag. Flow Table.	Go to Step 3.
3	Check HO2S-1 signal. 1) Connect scan tool to DLC with ignition switch OFF. 2) Warm up engine to normal operating temperature and keep it at 2000 r/min. for 60 sec. 3) Repeat racing engine (Repeat depressing accelerator pedal 5 to 6 times continuously and take foot off from pedal to enrich and enlean A/F mixture). See Fig. 1 and 2. Does HO2S-1 output voltage deflect between 0.3 V and over 0.6 V repeatedly?	Intermittent trouble. Check for intermittent referring to “Intermittent and Poor Connection” in Section 0A.	Check “WHT” and “ORN” wires for open and short, and connections for poor connection. If wires and connections are OK, replace HO2S-1.

Fig. 1 for Step 3

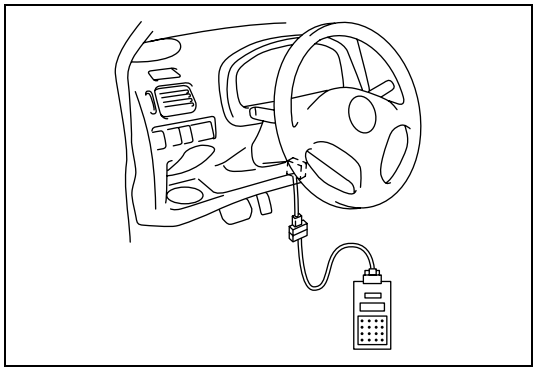

Fig. 2 for Step 3

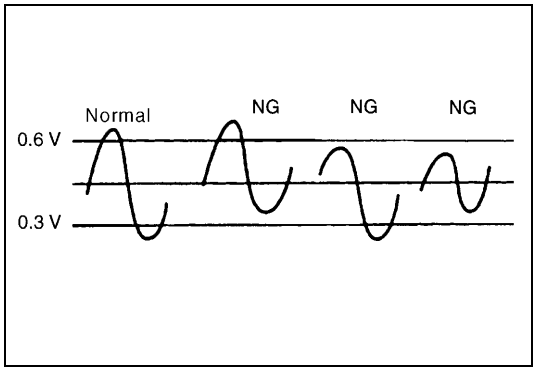

DTC P0133 HEATED OXYGEN SENSOR (HO2S) CIRCUIT SLOW RESPONSE (SENSOR-1)

WIRING DIAGRAM / CIRCUIT DESCRIPTION

Refer to DTC P0130 section.

DTC DETECTING CONDITION	POSSIBLE CAUSE
• When running at specified idle speed after engine warmed up and running at specified vehicle speed, response time (time to change from lean to rich or from rich to lean) of HO2S-1 output voltage is about 1 sec. at minimum or average time of 1 cycle is 5 sec. at minimum. See. Fig. 1 ✱2 driving cycle detection logic, Monitoring once/1 driving.	• Heated oxygen sensor-1 malfunction

Fig. 1

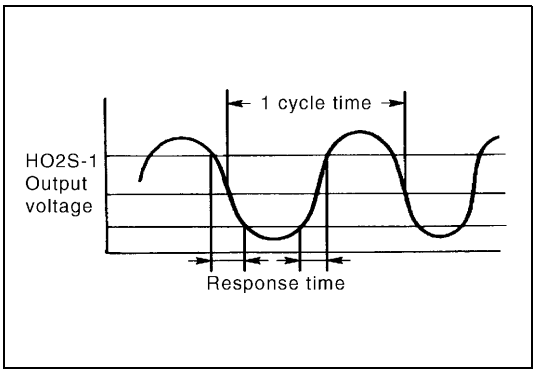

DTC CONFIRMATION PROCEDURE

Refer to DTC P0130 section.

INSPECTION

Step	Action	Yes	No
1	Was “ENGINE DIAG. FLOW TABLE” performed?	Go to Step 2.	Go to “ENGINE DIAG. FLOW TABLE”.
2	Is there DTC(s) other than HO2S-1 (DTC P0133)?	Go to applicable DTC Diag. Flow Table.	Replace HO2S-1.

DTC P0134 HEATED OXYGEN SENSOR (HO2S) CIRCUIT NO ACTIVITY DETECTED (SENSOR-1)

WIRING DIAGRAM / CIRCUIT DESCRIPTION

Refer to DTC P0130 section.

DTC DETECTING CONDITION	POSSIBLE CAUSE
• Engine warmed up. • While running under other than high load and high engine speed conditions or at specified idle speed (engine is in closed loop condition), HO2S-1 output voltage is high or low continuously. ✱2 driving cycle detection logic, Continuous monitoring.	• "WHT" or "ORN" circuit open or short • Heated oxygen sensor malfunction • Fuel system malfunction • Exhaust gas leakage

DTC CONFIRMATION PROCEDURE

Refer to DTC P0131 section.

INSPECTION

Step	Action	Yes	No
1	Was "ENGINE DIAG. FLOW TABLE" performed?	Go to Step 2.	Go to "ENGINE DIAG. FLOW TABLE".
2	Is there DTC(s) other than Fuel system (DTC P0171/P0172) and HO2S-1 (DTC P0134)?	Go to applicable DTC Diag. Flow Table.	Go to Step 3.
3	Check HO2S-1 and Its Circuit. 1) Connect scan tool to DLC with ignition switch OFF. 2) Warm up engine to normal operating temperature and keep it at 2000 r/min. for 60 sec. 3) Repeat racing engine (Repeat depressing accelerator pedal 5 to 6 times continuously and take foot off from pedal to enrich and enlean A/F mixture). See Fig. 1. Does HO2S-1 output voltage deflect between 0.3V and over 0.6V repeatedly?	Go to DTC P0171 and P0172 Diag. Flow Table (Fuel System Check).	Check "WHT" and "ORN" wires for open and short, and connections for poor connection. If wires and connections are OK, replace HO2S-1.

Fig. 1 for Step 3

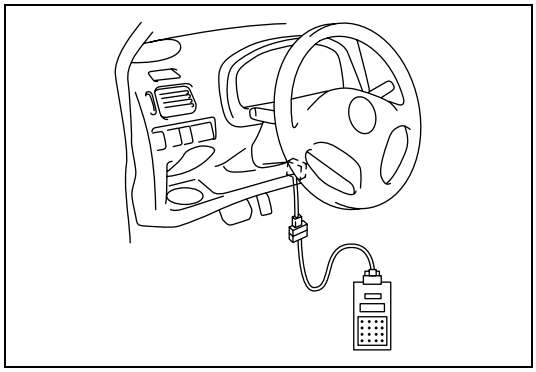

DTC P0135 (DTC NO.14) HEATED OXYGEN SENSOR (HO2S) HEATER CIRCUIT MALFUNCTION (SENSOR-1)

WIRING DIAGRAM / CIRCUIT DESCRIPTION

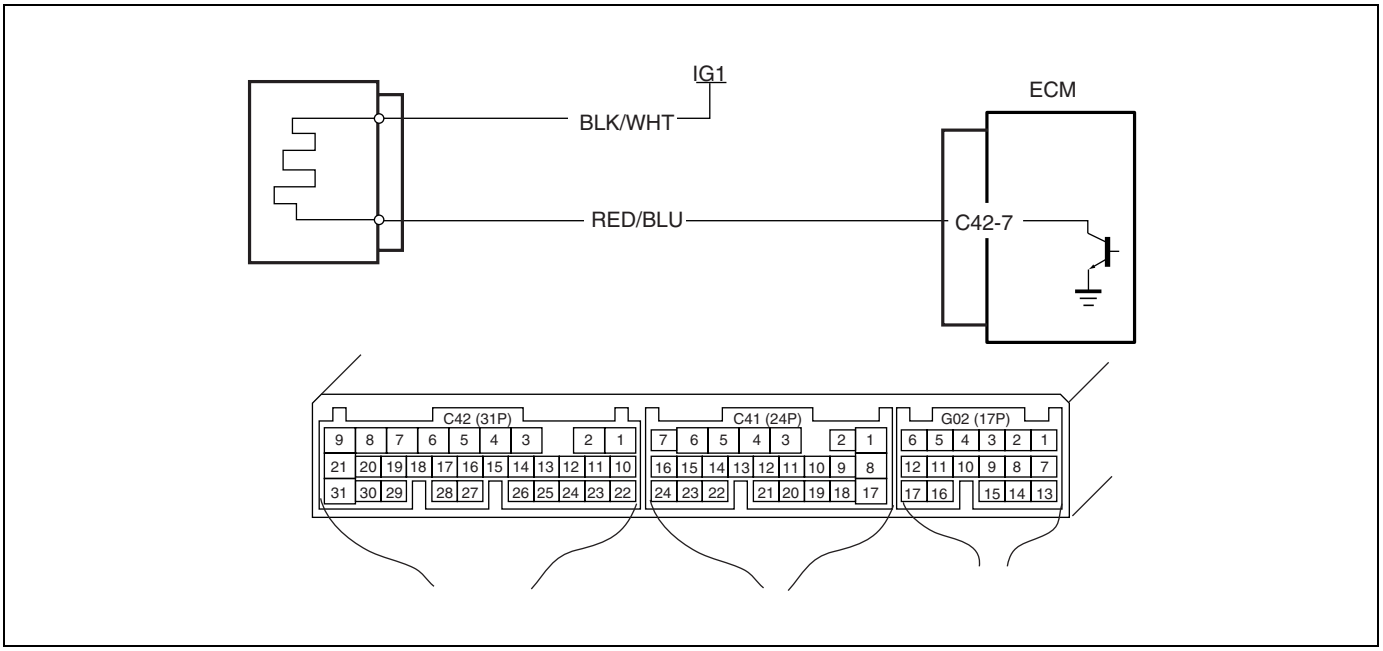

DTC DETECTING CONDITION	POSSIBLE CAUSE
DTC will set when one of the following conditions is met. • Low voltage at terminal C42-7 when engine is running at high load. • High voltage at terminal C42-7 when engine is running under condition other than above. ✱2 driving cycle detection logic, Continuous monitoring.	• HO2S-1 heater circuit open or shorted to ground • ECM malfunction

DTC CONFIRMATION PROCEDURE

WARNING:
- **When performing a road test, select a place where there is no traffic or possibility of a traffic accident and be very careful during testing to avoid occurrence of an accident.**
- **Road test should be carried out with 2 persons, a driver and a tester.**

1) Turn ignition switch OFF.
2) Clear DTC with ignition switch ON, start engine and keep it at idle for 1 min.
3) Start vehicle and depress accelerator pedal fully for 5 sec. or longer.
4) Stop vehicle.
5) Check DTC in “DTC” mode and pending DTC in “ON BOARD TEST” or “PENDING DTC” mode.

INSPECTION

Step	Action	Yes	No
1	Was “ENGINE DIAG. FLOW TABLE” performed?	Go to Step 2.	Go to “ENGINE DIAG. FLOW TABLE”.
2	Check Heater for operation. 1) Check voltage at terminal C42-7. See Fig. 1. 2) Warm up engine to normal operating temperature. 3) Stop engine. 4) Turn ignition switch ON and Check voltage at terminal C42-7. See Fig. 1. Voltage should be over 10 V. 5) Start engine, run it at idle and check voltage at the same terminal. Voltage should be below 1.9 V. Are check results are specified?	Intermittent trouble Check for intermittent referring to “Intermittent and Poor Connection” in Section 0A.	Go to Step 3.
3	Check Heater of Sensor-1. 1) Disconnect HO2S-1 coupler with ignition switch OFF. 2) Check for proper connection to HO2S-1 at “BLK/WHT” and “RED/BLU” wire terminals. 3) If OK, then check heater resistance. See Fig. 2. Is it 5.0 – 6.4 Ω at 20°C, 68°F?	“RED/BLU” wire open or shorted to ground or poor connection at C42-7. If wire and connection are OK, substitute a known-good ECM and recheck.	Replace HO2S-1.

Fig. 1 for Step 2

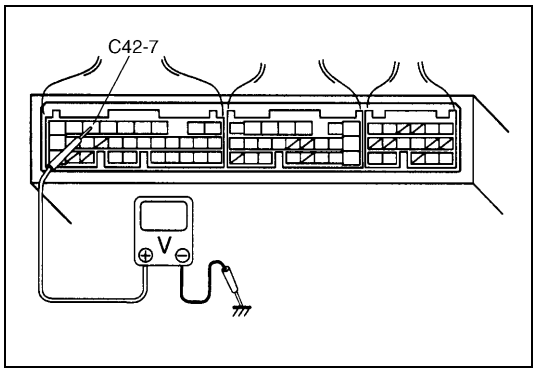

Fig. 2 for Step 3

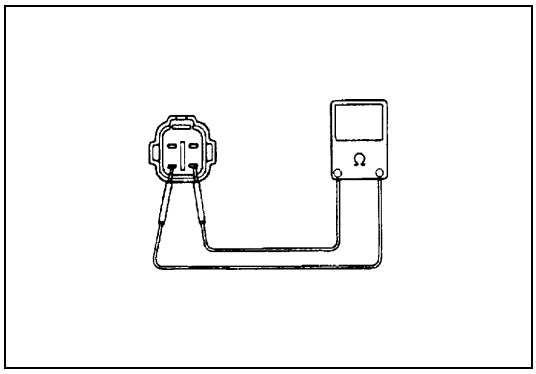

DTC P0136 HEATED OXYGEN SENSOR (HO2S) CIRCUIT MALFUNCTION (SENSOR-2)

WIRING DIAGRAM / CIRCUIT DESCRIPTION

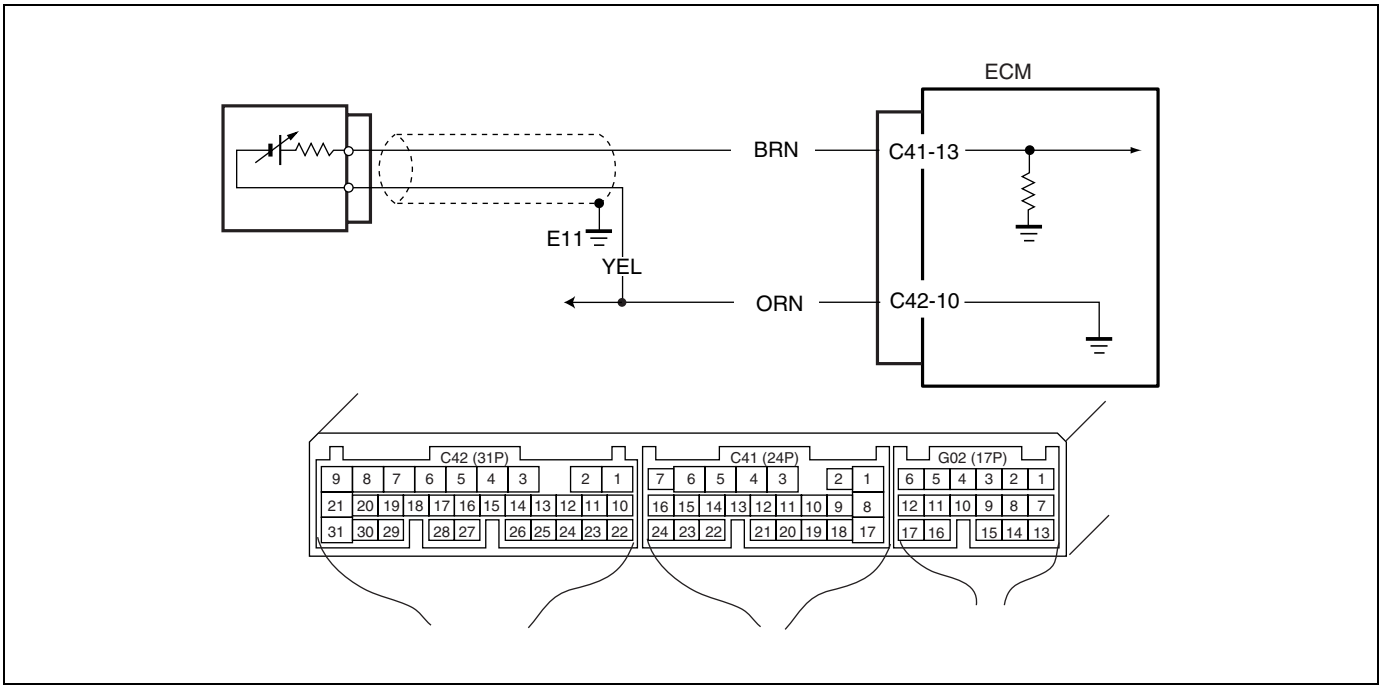

DTC DETECTING CONDITION	POSSIBLE CAUSE
DTC will set when one of the following conditions is detected. • Max. output voltage of HO2S-2 is lower than specified value or Min. output voltage is higher than specified value while vehicle driving. • Engine is warmed up and HO2S-2 voltage is 4.5 V or more. (circuit open) ✱2 driving cycle detection logic, monitoring once/1 driving.	• Exhaust gas leakage • "BRN", "YEL" or "ORN" circuit open or short • Heated oxygen sensor-2 malfunction • Fuel system malfunction

DTC CONFIRMATION PROCEDURE

WARNING:

- **When performing a road test, select a place where there is no traffic or possibility of a traffic accident and be very careful during testing to avoid occurrence of an accident.**
- **Road test should be carried out with 2 persons, a driver and a tester, on a level road.**

1) Turn ignition switch OFF.
   Clear DTC with ignition switch ON, check vehicle and environmental condition for :
   – Altitude (barometric pressure) : 2400 m, 8000 ft or less (560 mmHg, 75 kPa or more)
   – Ambient temp. : –10°C, 14°F or higher
   – Intake air temp. : 70°C, 158°F or lower
   – No exhaust gas leakage and loose connection
2) Warm up engine to normal operating temperature.
3) Drive vehicle under usual driving condition for 5 min. and check HO2S-2 output voltage and "short term fuel trim" with "Data List" mode on scan tool, and write it down.
4) Stop vehicle (don't turn ignition switch OFF).
5) Increase vehicle speed to higher than 20 mph, 32 km/h and then stop vehicle.

6) Repeat above steps 5) 4 times.
7) Increase vehicle speed to about 50 mph (80 km/h) in 3rd gear or 2 range.
8) Release accelerator pedal and with engine brake applied, keep vehicle coasting (fuel cut condition) for 10sec. or more.
9) Stop vehicle (don't turn ignition switch OFF) and run engine at idle for 2 min.
   After this step 9), if "Oxygen Sensor Monitoring TEST COMPLETED" is displayed in "READINESS TESTS" mode and DTC is not displayed in "DTC" mode, confirmation test is completed.
   If "TEST NOT COMPLTD" is still being displayed, proceed to next step 10).
10) Drive vehicle under usual driving condition for 10 min. (or vehicle is at a stop and run engine at idle for 10 min. or longer)
11) Stop vehicle (don't turn ignition switch OFF). Confirm test results according to "Test Result Confirmation Flow Table" in "DTC CONFIRMATION PROCEDURE" of DTC P0420.

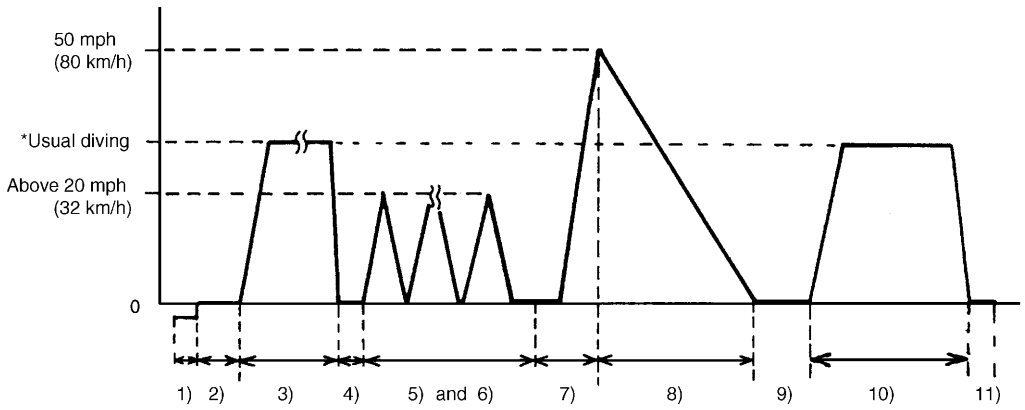

★Usual driving : Driving at 30 – 40 mph, 50 – 60 km/h including short stop according to traffic signal. (under driving condition other than high-load, high-engine speed, rapid accelerating and decelerating)

INSPECTION

Step	Action	Yes	No
1	Was "ENGINE DIAG. FLOW TABLE" performed?	Go to Step 2.	Go to "ENGINE DIAG. FLOW TABLE".
2	Check Exhaust System for leakage, loose connection and damage. Is it good condition?	Go to Step 3.	Repair or replace.
3	Check HO2S-2 and Its Circuit. Was HO2S-2 output voltage indicated on scan tool in step 3) of DTC confirmation test less than 1.275 V?	Go to Step 4.	"BRN", "YEL" or "ORN" circuit short to power supply circuit or HO2S-2 malfunction.
4	Check Short Term Fuel Trim. Did short term fuel trim very within – 20 – + 20% range in step 3) of DTC confirmation test?	Check "BRN", "YEL" or "ORN" wire for open and short, and connection for poor connection. If wire and connection are OK, replace HO2S-2.	Check fuel system. Go to DTC P0171/P0172 Diag. Flow Table.

DTC P0141 HEATED OXYGEN SENSOR (HO2S) HEATER CIRCUIT MALFUNCTION (SENSOR-2)

WIRING DIAGRAM / CIRCUIT DESCRIPTION

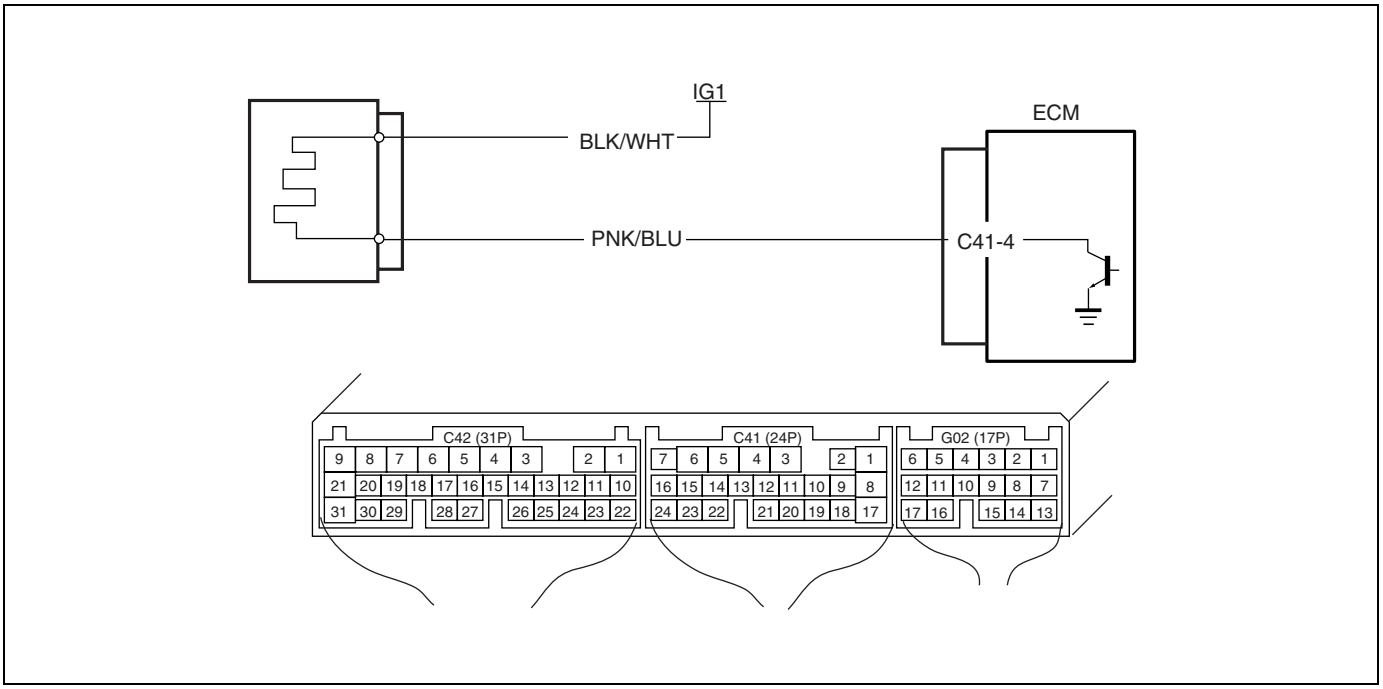

DTC DETECTING CONDITION	POSSIBLE CAUSE
DTC will set when any one of the following conditions is met. • Low voltage at terminal C41-4 for specified time after engine start or while engine running at high load. • High voltage at terminal C41-4 while engine running under other than above condition. ✱2 driving cycle detection logic, continuous monitoring.	• HO2S-2 heater circuit open or shorted to ground • ECM malfunction

DTC CONFIRMATION PROCEDURE

1) Turn ignition switch OFF once and then ON.
2) Clear DTC, start engine and warm up engine to normal operating temperature.
3) Keep it at 2000 r/min for 2 min.
4) Check pending DTC in “ON BOARD TEST” or “PENDING DTC” mode and DTC in “DTC” mode.

INSPECTION

Step	Action	Yes	No
1	Was “ENGINE DIAG. FLOW TABLE” performed?	Go to Step 2.	Go to “ENGINE DIAG. FLOW TABLE”.
2	Check HO2S-2 Heater and Its Circuit. 1) Warm up engine to normal operating temperature. 2) Stop engine. 3) Turn ignition switch ON and check voltage at terminal C41-4 See Fig. 1. Voltage should be over 10 V. 4) Start engine, run it at idle and check voltage at the same terminal after 1 min. from engine start. Voltage should be below 1.9 V. Are check result as specified?	Intermittent trouble. Check for intermittent referring to “Intermittent and Poor Connection” in Section 0A.	Go to Step 3.
3	Check Heater of Sensor-2. 1) Disconnect HO2S-2 coupler with ignition switch OFF. 2) Check for proper connection to HO2S-2 at “BLK/WHT” and “PNK/BLU” wire terminals. 3) If OK, then check heater resistance. Is it 12.0 – 14.3 Ω at 20°C, 68°F?	“PNK/BLU” wire open or shorted to ground or poor connection at C41-4. If wire and connection are OK, substitute a known-good ECM and recheck.	Replace HO2S-2.

Fig. 1 for Step 2

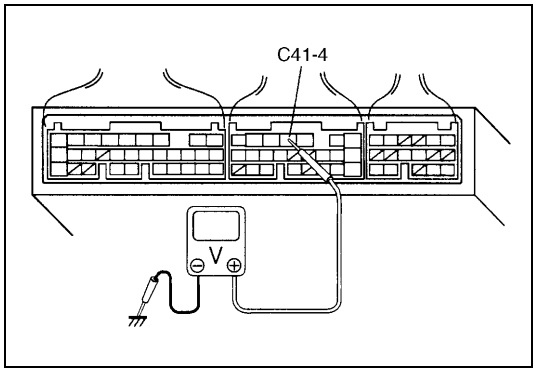

DTC P0171 FUEL SYSTEM TOO LEAN
DTC P0172 FUEL SYSTEM TOO RICH

WIRING DIAGRAM / CIRCUIT DESCRIPTION

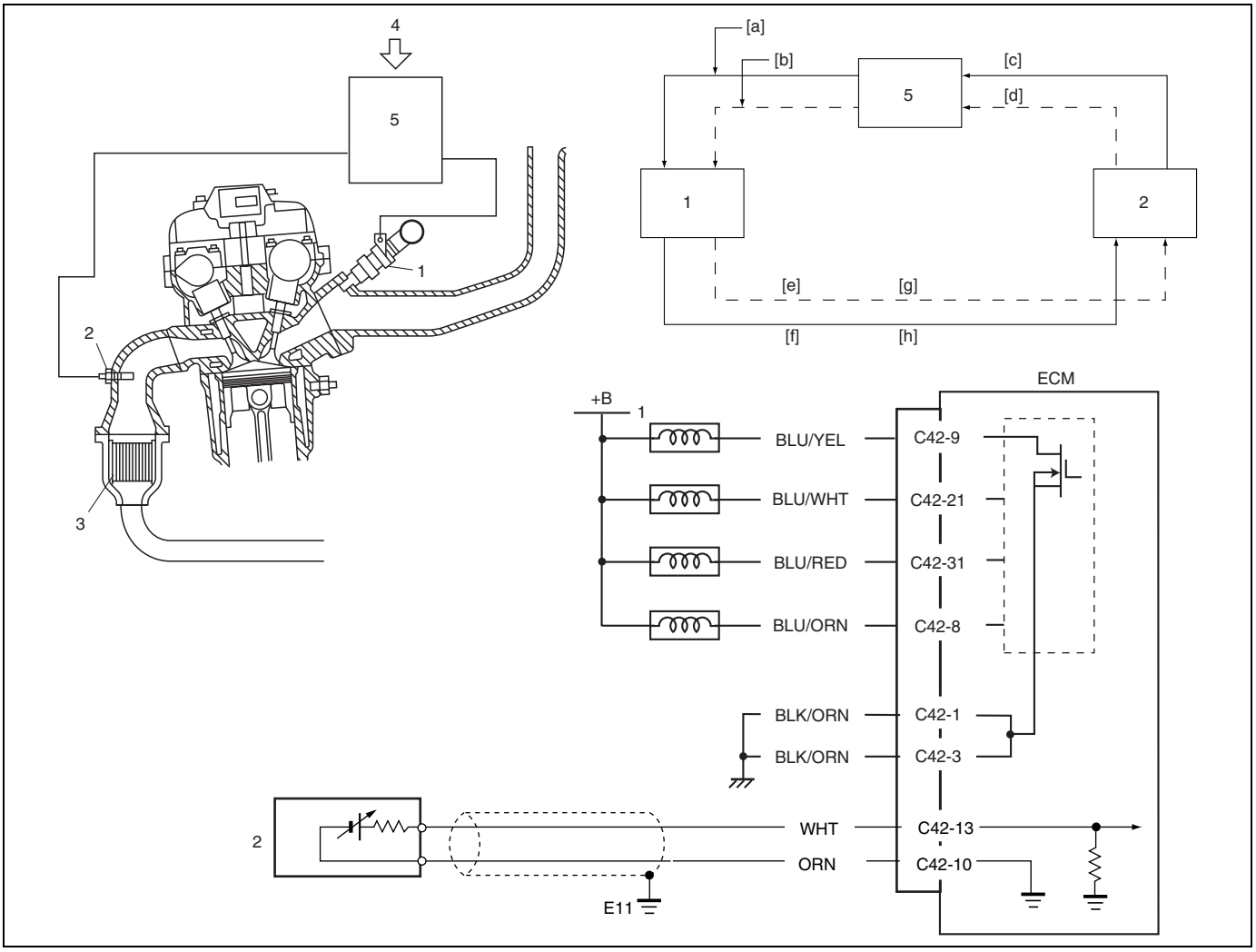

1. Injector	[a] : Signal to decrease amount of fuel injection	[f] : A/F mixture becomes leaner
2. HO2S-1	[b] : Signal to increase amount of fuel injection	[g] : Oxygen concentration decreases
3. WU-TWC (Warm up-three way catalytic convector)	[c] : High voltage	[h] : Oxygen concentration increases
4. Sensed information	[d] : Low voltage	
5. ECM	[e] : A/F mixture becomes richer	

DTC DETECTING CONDITION	POSSIBLE CAUSE
When one of the following conditions occurs while engine running under closed loop condition. • Air/fuel ratio too lean (Total fuel trim (short and long terms added) is more than 30%) • Air/fuel ratio too rich (Total fuel trim is less than – 30%) ✱2 driving cycle detection logic, continuous monitoring.	• Vacuum leaks (air drawn in). • Exhaust gas leakage. • Heated oxygen sensor-1 circuit malfunction. • Fuel pressure out of specification. • Fuel injector malfunction (clogged or leakage). • MAP sensor poor performance. • ECT sensor poor performance. • IAT sensor poor performance. • TP sensor poor performance. • EVAP control system malfunction. • PCV valve malfunction.

DTC CONFIRMATION PROCEDURE

WARNING:

- **When performing a road test, select a place where there is no traffic or possibility of a traffic accident and be very careful during testing to avoid occurrence of an accident.**
- **Road test should be carried out with 2 persons, a driver and a tester, on a level road.**

1) Turn ignition switch OFF.
2) Clear DTC with ignition switch ON.
3) Check vehicle and environmental condition for :
   – Altitude (barometric pressure) : 2400 m, 8000 ft or less (560 mmHg, 75 kPa or more)
   – Ambient temp. : –10°C, 14°F or higher
   – Intake air temp. : 70°C, 158°F or lower
4) Start engine and drive vehicle under usual driving condition (described in DTC confirmation procedure of DTC P0136) for 5 min. or longer and until engine is warmed up to normal operating temperature.
5) Keep vehicle speed at 30 – 40 mph, 50 – 60 km/h in 5th gear or “D” range for 5 min. or more.
6) Stop vehicle (do not turn ignition switch OFF).
7) Check pending DTC in “ON BOARD TEST” or “PENDING DTC” mode and DTC in “DTC” mode.

INSPECTION

Step	Action	Yes	No
1	Was “ENGINE DIAG. FLOW TABLE” performed?	Go to Step 2.	Go to “ENGINE DIAG. FLOW TABLE”.
2	Is there DTC(s) other than fuel system (DTC P0171/P0172)?	Go to applicable DTC Diag. Flow Table.	Go to Step 3.
3	Check HO2S-1 Output Voltage. 1) Connect scan tool to DLC with ignition switch OFF. 2) Warm up engine to normal operating temperature and keep it at 2000 r/min. for 60 sec. 3) Repeat racing engine (Repeat depressing accelerator pedal 5 to 6 times continuously and take foot off from pedal to enrich and enlean A/F mixture). See Fig. 1. Does HO2S-1 output voltage deflect between below 0.3 V and over 0.6 V repeatedly?	Go to Step 4.	Go to DTC P0130 Diag. Flow Table (HO2S-1 circuit check).
4	Check Fuel Pressure (Refer to section 6E1 for details). 1) Release fuel pressure from fuel feed line. 2) Install fuel pressure gauge. 3) Check fuel pressure. See Fig. 2. With fuel pump operating and engine at stop : 270 – 310 kPa, 2.7 – 3.1 kg/cm^2, 38.4 – 44.0 psi. At specified idle speed : 270 – 310 kPa, 2.7 – 3.1 kg/cm^2, 38.4 – 44.0 psi. Is measured value as specified?	Go to Step 5.	Go to Diag. Flow Table B-3 Fuel Pressure Check.

Step	Action	Yes	No
5	Check Fuel Injectors and Circuit. 1) Using sound scope (1) or such, check operating sound of each injector (2) when engine is running. Cycle of operating sound should vary according to engine speed. See Fig. 3. If no sound or an unusual sound is heard, check injector circuit (wire or coupler) or injector. 2) Turn ignition switch OFF and disconnect a fuel injector connector. 3) Check for proper connection to fuel injector at each terminal. See Fig. 4. 4) If OK, then check injector resistance. Injector Resistance : 11.3 – 13.8 ohm at 20°C (68°F) 5) Carry out steps 1) and 3) on each injector. 6) Check each injector for injected fuel volume (1) referring to Section 6E1. See Fig. 5. Injected Fuel Volume : 43 – 47 cc/15 sec 1.45/1.51 – 1.58/1.65 US/Imp.oz/15 sec) 7) Check each injector for fuel leakage after injector closed. Fuel Leakage : Less than 1 drop/min. Is check result in step 1) and 3) to 7) satisfactory?	Go to Step 6.	Check injector circuit or replace fuel injector(s).
6	Check EVAP Canister Purge Valve. 1) Disconnect purge hose from EVAP canister purge valve. 2) Place finger against the end of EVAP canister purge valve. 3) Check that vacuum is not felt there when engine is cool and running at idle. See Fig. 6. Is vacuum felt?	Check EVAP control system (See Section 6E1).	Go to Step 7.
7	Check Intake manifold absolute pressure sensor for performance (See DTC P0105 (No.11) Diag. Flow Table). Is it in good condition?	Go to Step 8.	Repair or replace.
8	Check Engine Coolant Temp. Sensor for performance (See Section 6E1). Is it in good condition?	Go to Step 9.	Replace engine coolant temp. sensor.
9	Check Intake Air Temp. Sensor for performance (See Section 6E1). Is it in good condition?	Go to Step 10.	Replace intake air temp. sensor.
10	Check Throttle Position Sensor for performance (See Step 4 of DTC P0121 Diag. Flow Table). Is it in good condition?	Go to Step 11.	Replace throttle position sensor.
11	Check PCV Valve for valve clogging (See Section 6E1). Is it good condition?	Substitute a known-good ECM and recheck.	Replace PCV valve.

Fig. 1 for Step 3

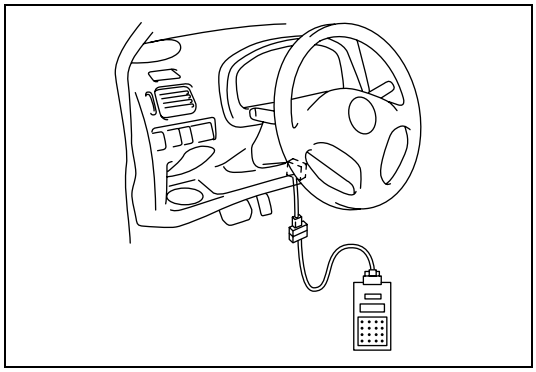

Fig. 2 for Step 4

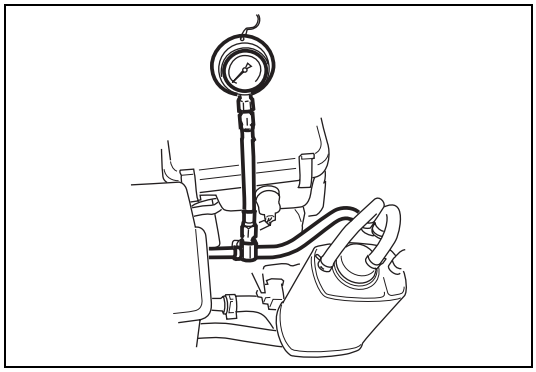

Fig. 3 for Step 5

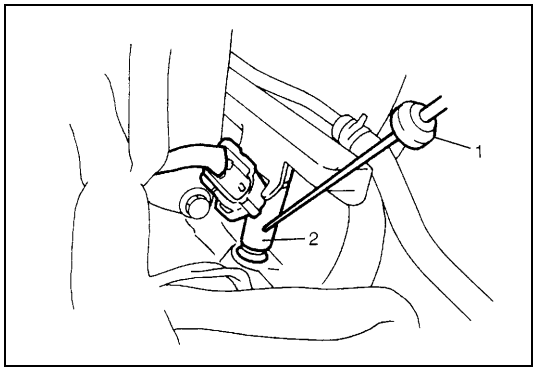

Fig. 4 for Step 5

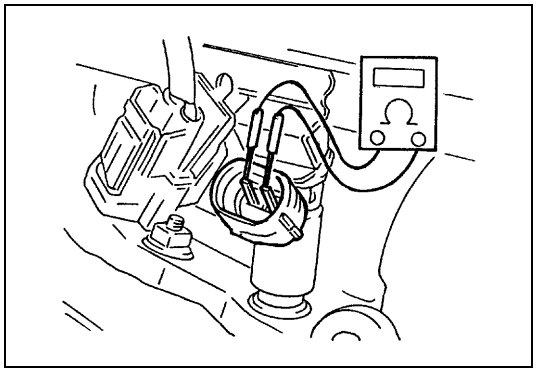

Fig. 5 for Step 5

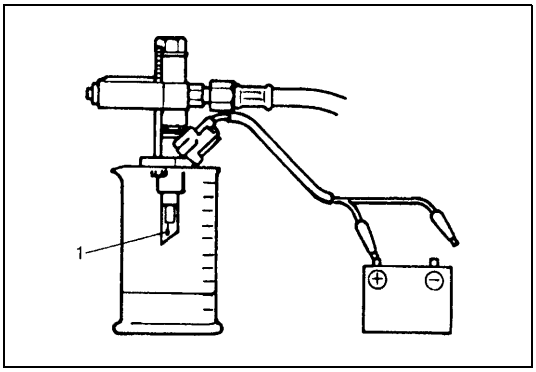

Fig. 6 for Step 6

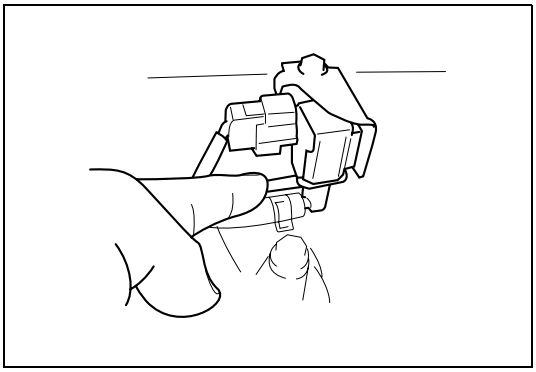

DTC P0300 RANDOM MISFIRE DETECTED (MISFIRE DETECTED AT 2 OR MORE CYLINDERS)

DTC P0301 CYLINDER 1 MISFIRE DETECTED

DTC P0302 CYLINDER 2 MISFIRE DETECTED

DTC P0303 CYLINDER 3 MISFIRE DETECTED

DTC P0304 CYLINDER 4 MISFIRE DETECTED

WIRING DIAGRAM

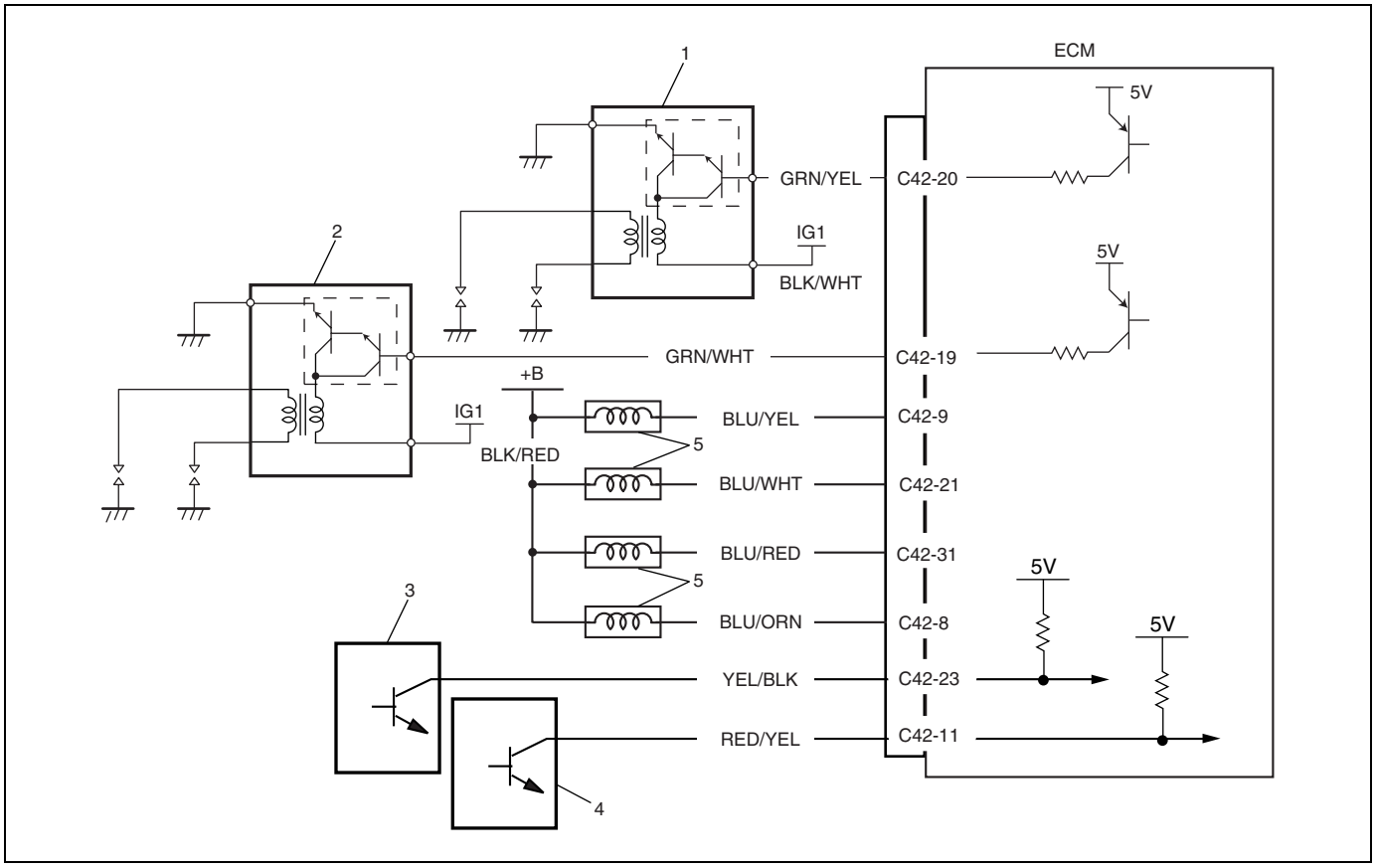

1.	Ignition coil No. 1
2.	Ignition coil No. 2
3.	CKP sensor
4.	CMP sensor
5.	Fuel injector

CIRCUIT DESCRIPTION

ECM monitors crankshaft revolution speed and engine speed via the crankshaft position sensor and cylinder No. via the camshaft position sensor. Then it calculates the change in the crankshaft revolution speed and from how many times such change occurred in every 200 or 1000 engine revolutions, it detects occurrence of misfire.

When ECM detects a misfire (misfire rate per 200 revolutions) which can cause overheat and damage to the three way catalytic converter, it makes the malfunction indicator lamp (MIL) flash as long as misfire occurs at that rate.

After that, however, when the misfire rate drops, MIL remains ON until it has been judged as normal 3 times under the same driving conditions.

Also, when ECM detects a misfire (misfire rate per 1000 revolutions) which will not cause damage to three way catalytic converter but can cause exhaust emission to be deteriorated, it makes MIL light according to the 2 driving cycle detection logic.

DTC DETECTING CONDITION	POSSIBLE CAUSE
• Engine under other than high revolution condition • Not on rough road • Engine speed changing rate (Below specified value) • Manifold absolute pressure changing rate (Below specified value) • Throttle opening changing rate (Below specified value) • Misfire rate per 200 or 1000 engine revolutions (how much and how often crankshaft revolution speed changes) is higher than specified value	• Engine overheating • Vacuum leaks (air inhaling) from air intake system • Ignition system malfunction (spark plug(s), high-tension cord(s), ignition coil assembly) • Fuel pressure out of specification • Fuel injector malfunction (clogged or leakage) • Engine compression out of specification • Valve lash (clearance) out of specification • Manifold absolute pressure sensor malfunction • Engine coolant temp. sensor malfunction • PCV valve malfunction • EVAP control system malfunction • EGR system malfunction

DTC CONFIRMATION PROCEDURE

NOTE:

Among different types of random misfire, if misfire occurs at cylinders 1 and 4 or cylinders 3 and 2 simultaneously, it may not possible to reconfirm DTC by using the following DTC confirmation procedure. When diagnosing the trouble of DTC P0300 (Random misfire detected) of the engine which is apparently misfiring, even if DTC P0300 cannot be reconfirmed by using the following DTC confirmation procedure, proceed to the following Diag. Flow Table.

WARNING:

- **When performing a road test, select a place where there is no traffic or possibility of a traffic accident and be very careful during testing to avoid occurrence of an accident.**
- **Road test should be carried out with 2 persons, a driver and a tester.**

1) Turn ignition switch OFF.
2) Clear DTC with ignition switch ON.
3) Check vehicle and environmental condition for :
   – Altitude (barometric pressure) : 2400 m, 8000 ft or less (560 mmHg, 75 kPa or more)
   – Ambient temp. : –10°C, 14°F or higher
   – Intake air temp. : 70°C, 158°F or lower
   – Engine coolant temp. : – 10 – 110°C, 14 – 230°F
4) Start engine and keep it at idle for 2 min. or more.
5) Check DTC in “DTC” mode and pending DTC in “ON BOARD TEST” or “PENDING DTC” mode.
6) If DTC is not detected at idle, consult usual driving based on information obtained in “Customer complaint analysis” and “Freeze frame data check”.

INSPECTION

CAUTION:

For iridium spark plugs, do not adjust air gap or clean.

Step	Action	Yes	No
1	Was “ENGINE DIAG. FLOW TABLE” performed?	Go to Step 2.	Go to “ENGINE DIAG. FLOW TABLE”.

Step	Action	Yes	No
2	Is there DTC other than Fuel system (DTC P0171/ P0172) and misfire (DTC P0300-P0304)?	Go to applicable DTC Diag. Flow Table.	Go to Step 3.
3	Check Ignition System. 1) Remove spark plugs and check them for; • Air gap : 1.0 – 1.1 mm (0.040 – 0.043 in.) See Fig. 1. • Carbon deposits/Insulator damage/Plug type If abnormality is found, adjust, clean or replace. 2) Disconnect all injector connectors. 3) Connect spark plugs to high tension cords and then ground spark plugs. 4) Crank engine and check that each spark plug sparks. Are above check results satisfactory?	Go to Step 4.	Check ignition system parts (Refer to Section 6F1)
4	Check Fuel Pressure (Refer to Section 6E1 for details). 1) Release fuel pressure from fuel feed line. 2) Install fuel pressure gauge. See Fig. 2. 3) Check fuel pressure. With fuel pump operating and engine at stop : 270 – 310 kPa, 2.7 – 3.1 kg/cm^2, 38.4 – 44.0 psi. At specified idle speed : 270 – 310 kPa, 2.7 – 3.1 kg/cm^2, 38.4 – 44.0 psi. Is measured value as specified?	Go to Step 5.	Go to Diag. Flow Table B-3 fuel pressure check.
5	Check Fuel Injectors and Circuit. 1) Using sound scope (1) or such, check operating sound of each injector (2) when engine is running. Cycle of operating sound should very according to engine speed. See Fig 3. If no sound or an unusual sound is heard, check injector circuit (wire or connector) or injector. 2) Turn ignition switch OFF and disconnect a fuel injector connector. 3) Check for proper connection to fuel injector at each terminal. See Fig. 4. 4) If OK, then check injector resistance. Injector Resistance : 11.3 – 13.8 ohm at 20°C (68°F) 5) Carry out steps 1) and 3) on each injector. 6) Check each injector for injected fuel volume referring to Section 6E1. See Fig. 5. Injected Fuel Volume : 43 – 47 cc/15 sec (1.45/1.51 – 1.58/1.65 US/Imp. oz/15 sec) 7) Check each injector for fuel leakage after injector closed. Fuel Leakage : Less than 1 drop/min. Is check result in step 1) and 3) to 7) satisfactory?	Go to Step 6.	Check injector circuit or replace fuel injector(s).
6	Check PCV Valve for clogging (See Section 6E1). Is it in good condition?	Go to Step 7.	Replace PCV valve.

Step	Action	Yes	No
7	Check EVAP Canister Purge Valve for Closing. 1) Disconnect purge hose from EVAP canister purge valve. 2) Place finger against the end of EVAP canister purge valve. 3) Check that vacuum is not felt there, when engine is cool and running at idle. See Fig. 6. Is vacuum felt?	Check EVAP control system (See Section 6E1).	Go to Step 8.
8	Check MAP Sensor for performance (See DTC P0105 Diag. Flow Table). Is it in good condition?	Go to Step 9.	Repair or replace.
9	Check ECT Sensor for performance (See Section 6E1). Is it in good condition?	Go to Step 10.	Replace engine coolant temp. sensor.
10	Check Parts or System which can cause engine rough idle or poor performance. • Engine compression (See Section 6A1). • Valve lash (See Section 6A1). • Valve timing (Timing belt installation. See Section 6A1). Are they in good condition?	Check wire harness and connection of ECM ground, ignition system and fuel injector for intermittent open and short.	Repair or replace.

Fig. 1 for Step 3

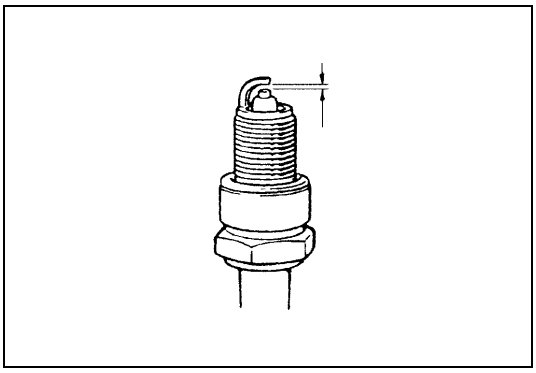

Fig. 2 for Step 4

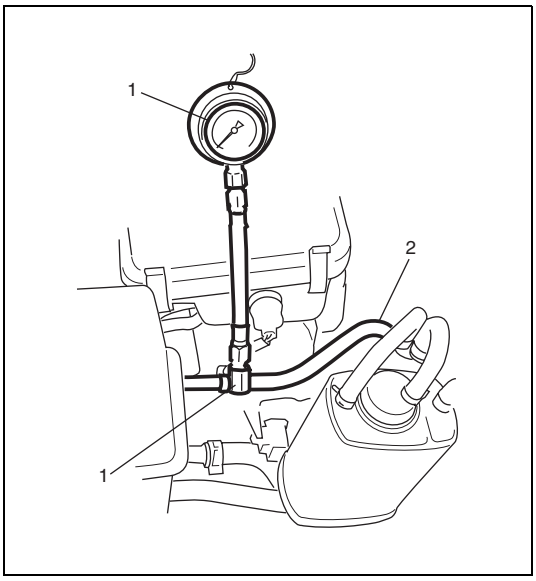

1.	Fuel pressure gauge & 3 way joint
2.	Fuel feed hose

Fig. 3 for Step 5

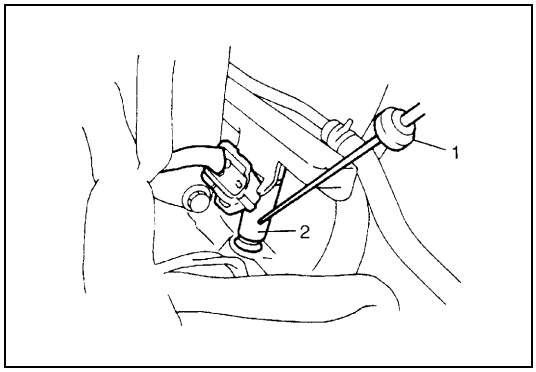

Fig. 4 for Step 5

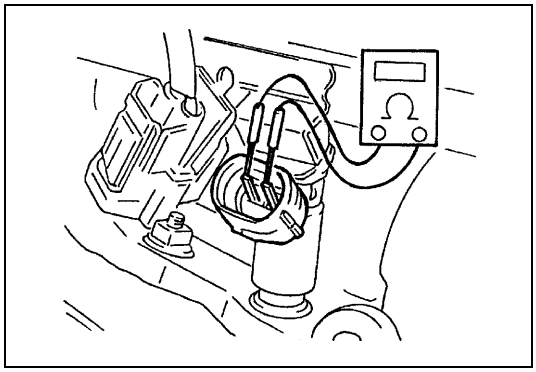

Fig. 5 for Step 5

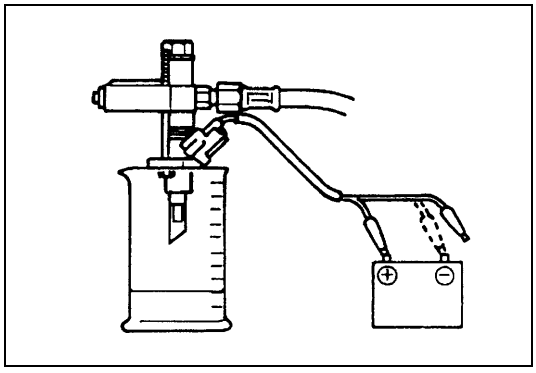

Fig. 6 for Step 7

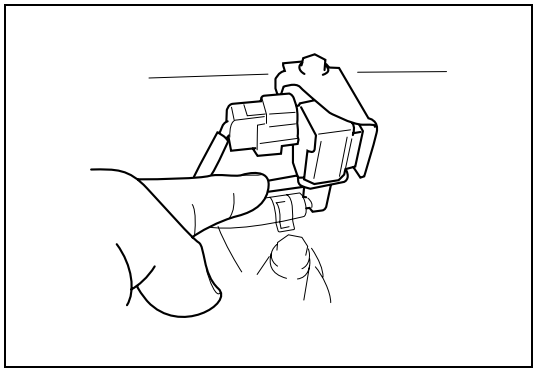

DTC P0325 (DTC NO.17) KNOCK SENSOR CIRCUIT MALFUNCTION

WIRING DIAGRAM / CIRCUIT DESCRIPTION

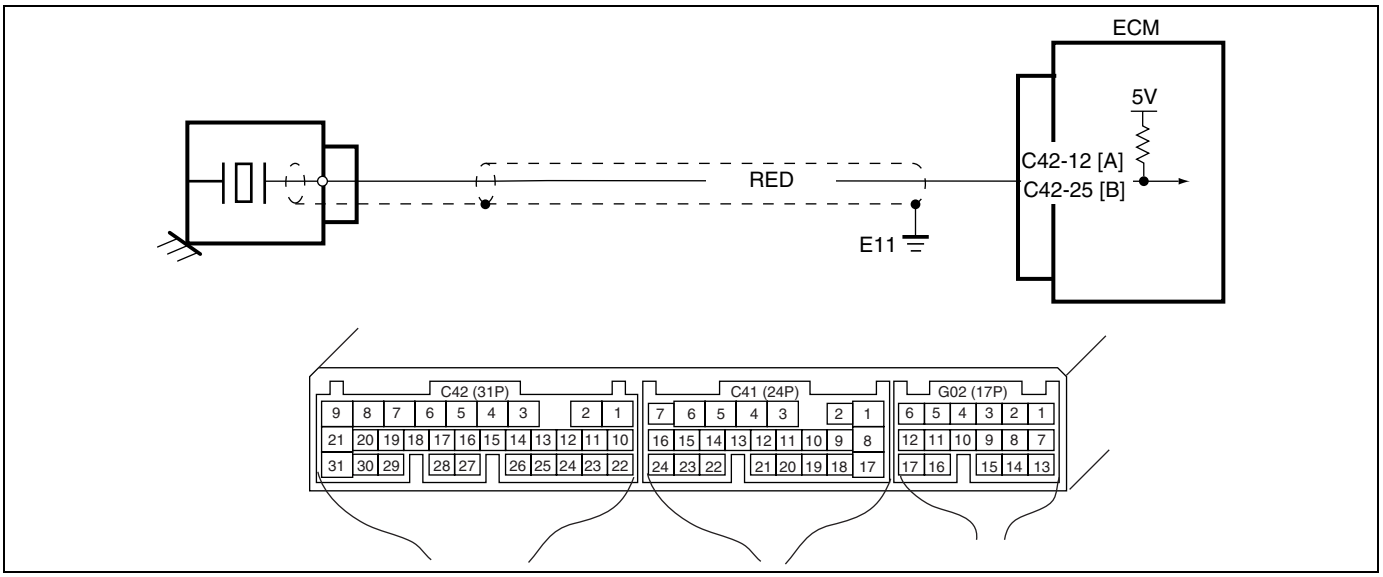

[A] : Case of TYPE A is shown (See NOTE)	[B] : Case of TYPE B is shown (See NOTE)

NOTE:

For TYPE A and TYPE B, refer to NOTE in "ECM VOLTAGE VALUES TABLE" for applicable model.

DTC DETECTING CONDITION	POSSIBLE CAUSE
• Knock sensor voltage is 3.91 V or more or • Knock sensor voltage is 1.23 V or less	• "RED" circuit open or shorted to ground • Knock sensor malfunction • ECM malfunction

DTC CONFIRMATION PROCEDURE

1) Clear DTC, start engine and keep it at idle for 1 min.
2) Select "DTC" mode on scan tool and check DTC.

INSPECTION

Step	Action	Yes	No
1	Was "ENGINE DIAG. FLOW TABLE" performed?	Go to Step 2.	Go to "ENGINE DIAG. FLOW TABLE".
2	Check Knock Sensor Signal. 1) With engine running, check voltage from C42-12 terminal of ECM connector to body ground. See Fig. 1. Is voltage about 1.23 – 3.91 V?	Knock sensor and its circuit are in good condition. Intermittent trouble or faulty ECM. Recheck, referring to Intermittent Trouble in Section 0A.	Go to Step 3.
3	Check Knock Sensor Output. 1) Stop engine. 2) With ignition switch at OFF position, disconnect knock sensor connector. 3) With ignition switch at ON position, check voltage from "RED" terminal of knock sensor connector to body ground. See Fig. 2. Is it 4 – 5 V?	Faulty knock sensor. Substitute a known-good knock sensor and recheck.	"RED" wire open, shorted to ground circuit or poor C42-12 (Case of TYPE A. See NOTE) or 42-25 (Case of TYPE B. See NOTE) connection. If wire and connection are OK, substitute a known-good ECM and recheck.

Fig. 1 for Step 2

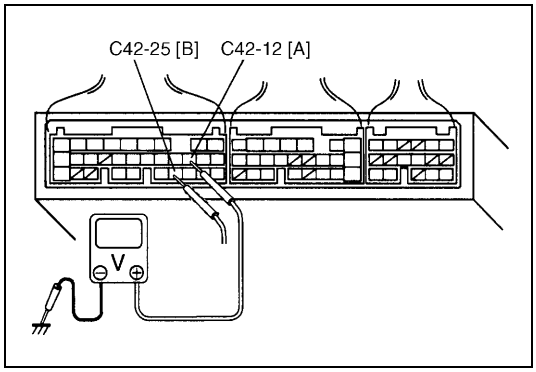

[A] : Case of TYPE A is shown (See NOTE)
[B] : Case of TYPE B is shown (See NOTE)

Fig. 2 for Step 2

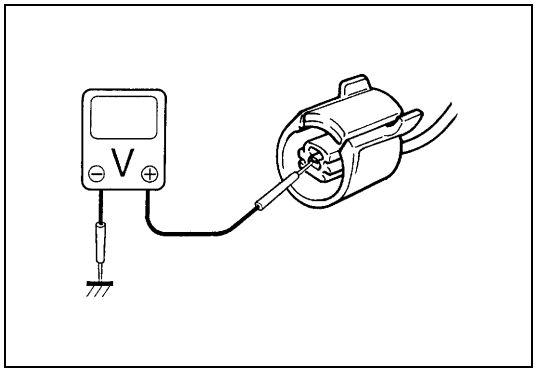

DTC P0335 (DTC NO.23) CRANKSHAFT POSITION (CKP) SENSOR CIRCUIT MALFUNCTION

WIRING DIAGRAM / CIRCUIT DESCRIPTION

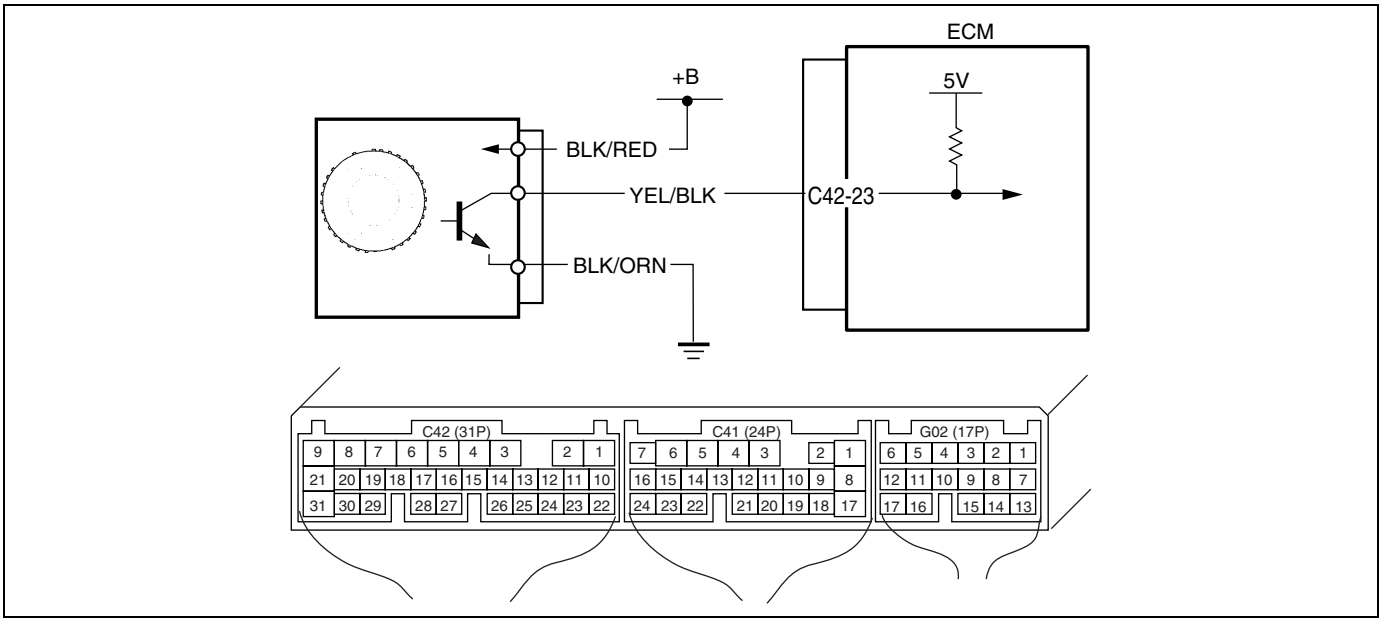

DTC DETECTING CONDITION	POSSIBLE CAUSE
• No CKP sensor signal for 2 seconds at engine cranking.	• CKP sensor circuit open or short. • Crankshaft timing belt pulley teeth damaged. • CKP sensor malfunction, foreign material being attached or improper installation. • ECM malfunction.

REFERENCE

Connect oscilloscope between terminals C42-23 of ECM connector connected to ECM and ground and check CKP sensor signal.

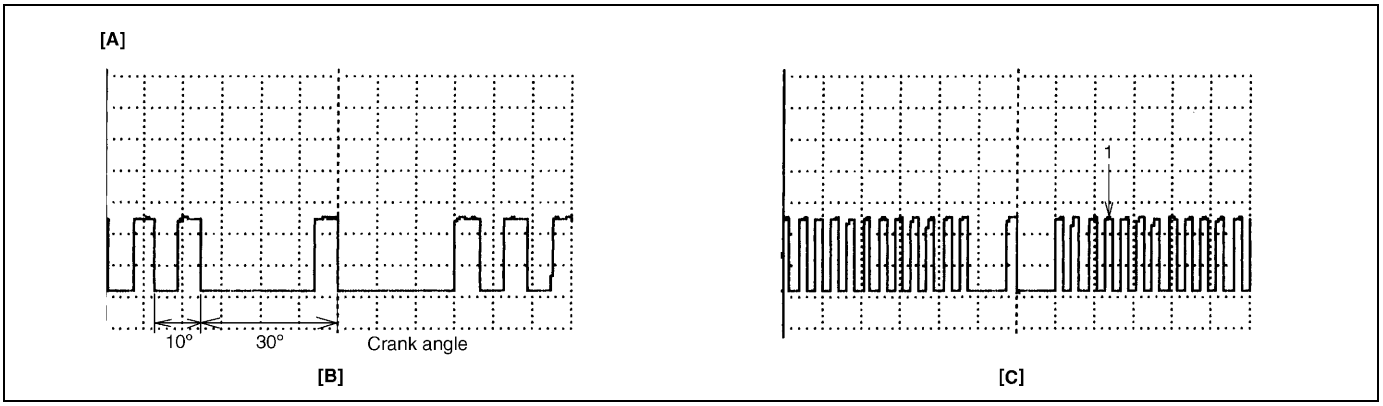

1. BTDC 5° (Crank angle)	[B] : Waveforms at specified idle speed
[A] : Oscilloscope Waveforms	[C] : Waveforms at 2000 r/min

DTC CONFIRMATION PROCEDURE

1) Clear DTC and crank engine for 2 sec.
2) Select “DTC” mode on scan tool and check DTC.

INSPECTION

Step	Action	Yes	No
1	Was “ENGINE DIAG. FLOW TABLE” performed?	Go to Step 2.	Go to “ENGINE DIAG. FLOW TABLE”.
2	Check CKP Sensor and Connector for proper installation. Is CKP sensor installed properly and connector connected securely?	Go to Step 3.	Correct.
3	Check Wire Harness and Connection. 1) Disconnect connector from CKP sensor. 2) Check for proper connection to CKP sensor at each terminal. 3) If OK, turn ignition switch ON and check for voltage at each terminal of sensor connector disconnected. See Fig. 1. Terminal “B+” : 10 – 14 V Terminal “Vout” : 4 – 5 V Terminal “GND” : – 0 V Is check result satisfactory?	Go to Step 5.	Go to Step 4.
4	Was terminal “Vout” voltage out of specification in Step 3 check?	“YEL/BLK” wire open, short or poor connection. If wire and connection are OK, substitute a known-good ECM and recheck.	“BLK/RED” or “BLK/ORN” wire open, short or poor connection.
5	Check Ground Circuit for open. 1) Turn ignition switch OFF. 2) Check for continuity between “GND” terminal of CKP sensor connector and engine ground. Is continuity indicated?	Go to Step 6.	“BLK/ORN” wire open or poor ground connection.
6	Check CKP Sensor for operation. 1) Remove CKP sensor from sensor case. 2) Remove metal particles on end face of CKP sensor, if any. 3) Connect each connector to ECM and CKP sensor. 4) Turn ignition switch ON. 5) Check for voltage at terminal C42-23 of connector connected to ECM by passing magnetic substance (iron) while keeping approximately 1 mm (0.03 in.) gap with respect to end face of CKP sensor. See Fig. 2 and 3. Does voltage vary from low (0 –1 V) to high (4 – 5 V) or from high to low?	Go to Step 7.	Replace CKP sensor.
7	Check Signal Rotor for the following. See Fig. 4. • Damage • No foreign material attached Is it in good condition?	Intermittent trouble or faulty ECM. Check for intermittent referring to “Intermittent and Poor Connection” in Section 0A.	Clean rotor teeth or replace CMP sensor.

Fig. 1 for Step 3

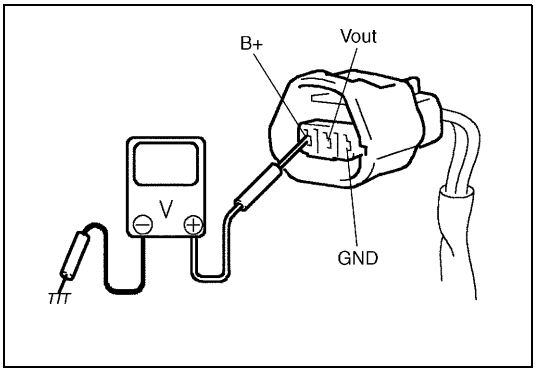

Fig. 2 for Step 6

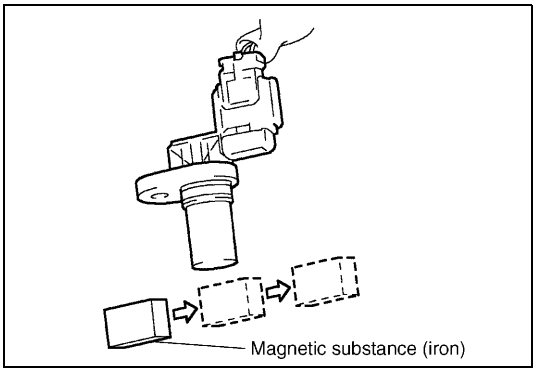

Fig. 3 for Step 6

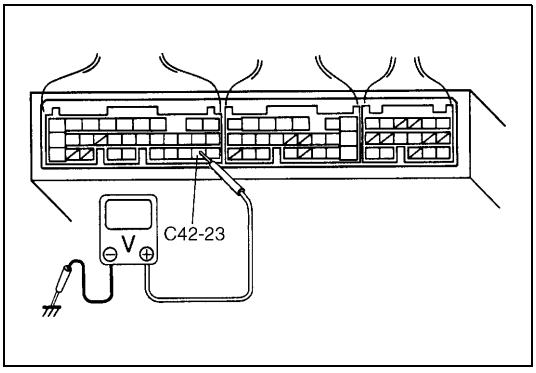

Fig. 4 for Step 7

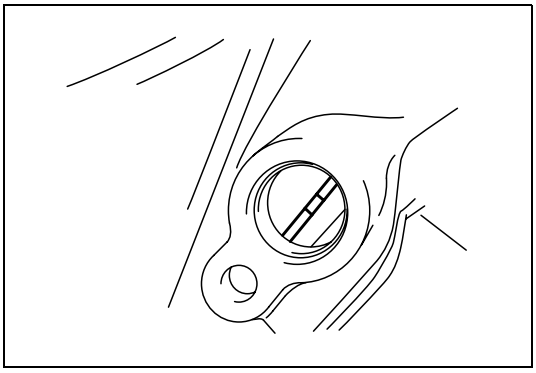

DTC P0340 (DTC NO.15) CAMSHAFT POSITION (CMP) SENSOR CIRCUIT MALFUNCTION

WIRING DIAGRAM / CIRCUIT DESCRIPTION

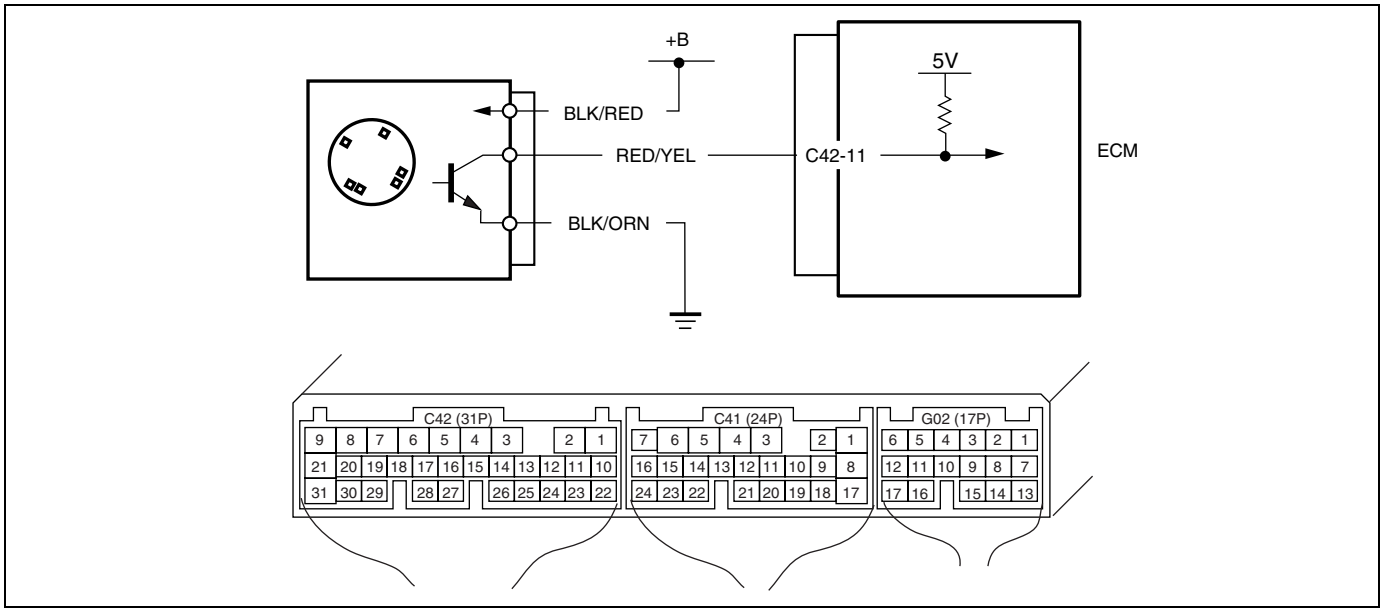

DTC DETECTING CONDITION	POSSIBLE CAUSE
• No CMP sensor signal during engine running (CKP sensor signal is inputted).	• CMP sensor circuit open or short. • Signal rotor teeth damaged. • CMP sensor malfunction, foreign material being attached or improper installation. • Incorrect starter signal. • ECM malfunction.

REFERENCE

Connect oscilloscope between terminals E21-11 of ECM connector connected to ECM and body ground and check CMP sensor signal. When CKP circuit is failed (open or short), ECM identify the cylinder only by CMP sensor signal.

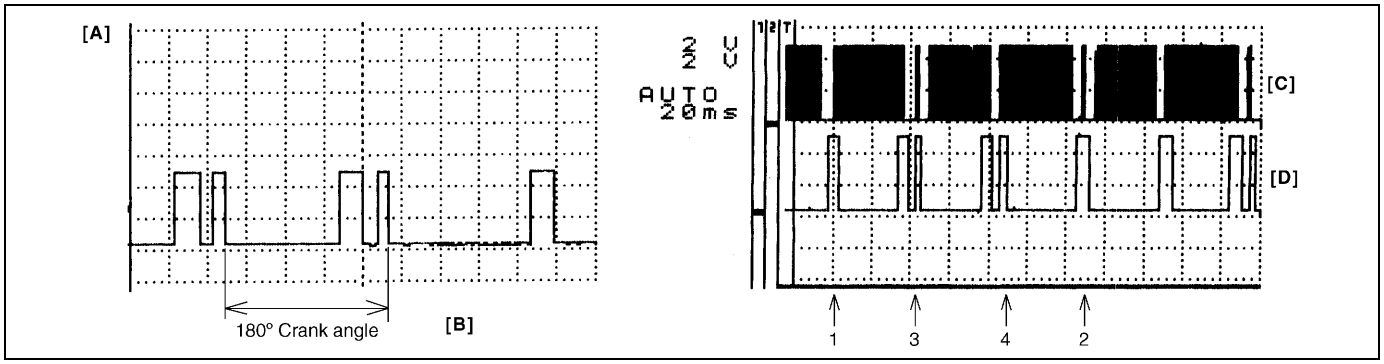

1. No.1 cylinder	3. No.3 cylinder	[A] : Oscilloscope Waveforms	[C] : CKP sensor signal
2. No.2 cylinder	4. No.4 cylinder	[B] : Waveforms at specified idle speed	[D] : CMP sensor signal

DTC CONFIRMATION PROCEDURE

1) Clear DTC.
2) Start engine and keep it at idle for 1 min.
3) Select “DTC” mode on scan tool and check DTC.

INSPECTION

Step	Action	Yes	No
1	Was “ENGINE DIAG. FLOW TABLE” performed?	Go to Step 2.	Go to “ENGINE DIAG. FLOW TABLE”.
2	Check CMP Sensor and connector for proper installation. Is CMP sensor installed properly and connector connected securely?	Go to Step 3.	Correct.
3	Check Wire Harness and Connection. 1) Disconnect connector from CMP sensor. 2) Check for proper connection to CMP sensor at each terminal. 3) If OK, turn ignition switch ON and check for voltage at each terminal of sensor connector disconnected. See Fig. 1. Terminal “B+” : 10 – 14 V Terminal “Vout” : 4 – 5 V Terminal “GND” : 0 V Is check result satisfactory?	Go to Step 5.	Go to Step 4.
4	Was terminal “Vout” voltage out of specification in Step 3 check?	“RED/YEL” wire open, short or poor connection. If wire and connection are OK, substitute a known-good ECM and recheck.	“BLK/RED” or “BLK/ORN” wire open, short or poor connection.
5	Check Ground Circuit for open. 1) Turn ignition switch OFF. 2) Check for continuity between “GND” terminal of CMP sensor connector and engine ground. Is continuity indicated?	Go to Step 6.	“BLK/ORN” wire open or poor ground connection.
6	Check CMP Sensor for operation. 1) Remove CMP sensor from sensor case. 2) Remove metal particles on end face of CMP sensor, if any. 3) Connect each connector to ECM and CMP sensor. 4) Turn ignition switch ON. 5) Check for voltage at terminal C42-11 of connector connected to ECM by passing magnetic substance (iron) while keeping approximately 1 mm (0.03 in.) gap with respect to end face of CMP sensor. See Fig. 2 and 3. Does voltage vary from low (0 – 1 V) to high (4 – 5 V) or from high to low?	Go to Step 7.	Replace CMP sensor.
7	Check Signal Rotor for the following. See Fig. 4. • Damage • No foreign material attached Is it in good condition?	Intermittent trouble or faulty ECM. Check for intermittent referring to “Intermittent and Poor Connection” in Section 0A.	Clean rotor teeth or replace CMP sensor.

Fig. 1 for Step 3

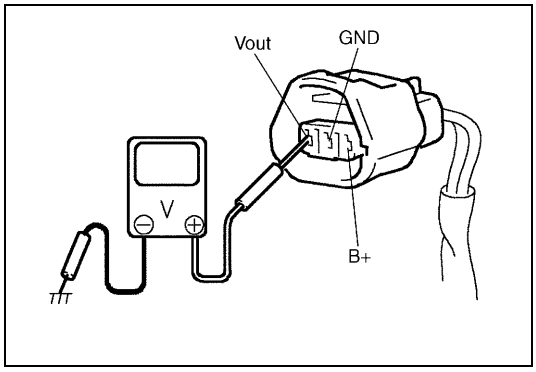

Fig. 2 for Step 6

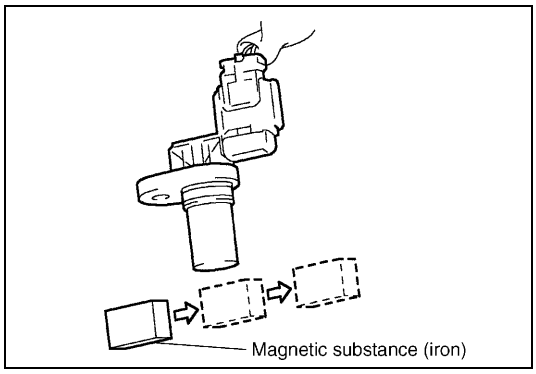

Fig. 3 for Step 6

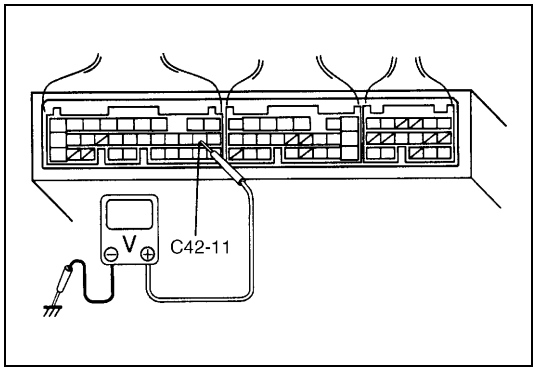

Fig. 4 for Step 7

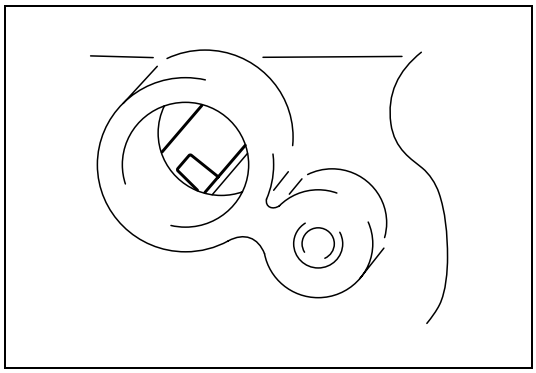

DTC P0400 EXHAUST GAS RECIRCULATION FLOW MALFUNCTION

WIRING DIAGRAM / CIRCUIT DESCRIPTION

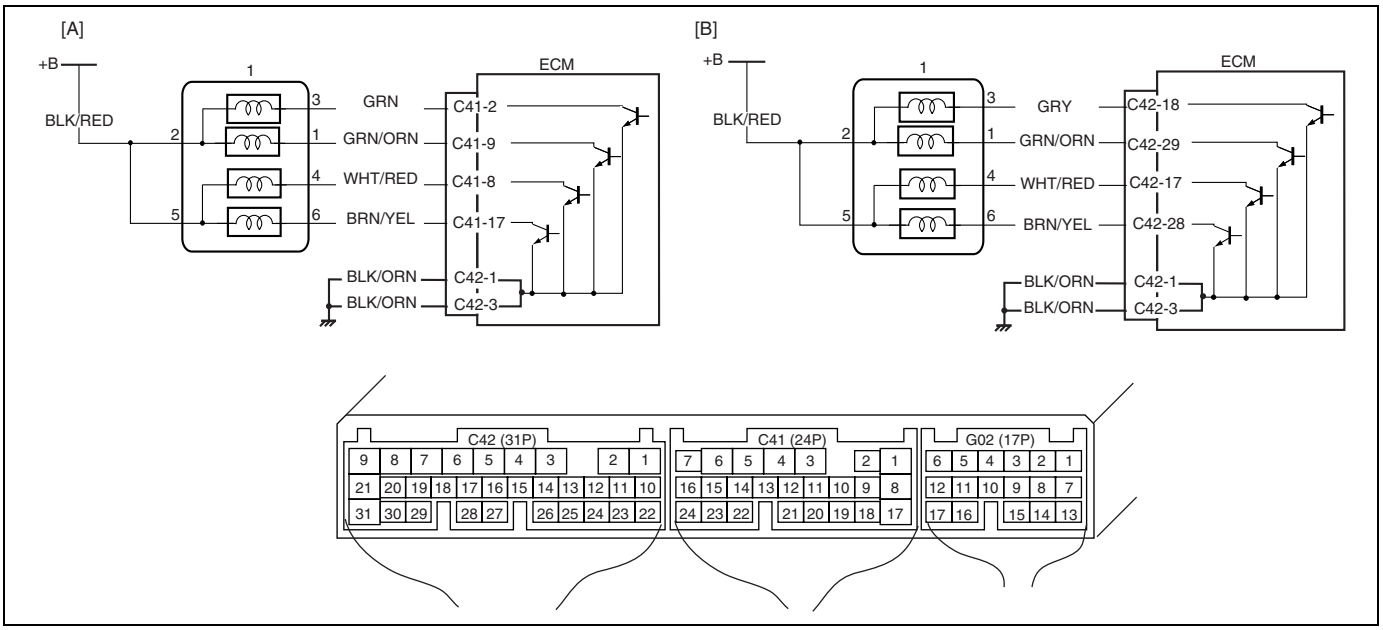

1. EGR valve	[A] : Case of TYPE A is shown (See NOTE)	[B] : Case of TYPE B is shown (See NOTE)

NOTE:

For TYPE A and TYPE B, refer to NOTE in "ECM VOLTAGE VALUES TABLE" for applicable model.

DTC DETECTING CONDITION	POSSIBLE CAUSE
• While running at specified vehicle speed after engine warm-up • During deceleration (engine speed high with closed throttle position ON) in which fuel cut is involved, difference in intake manifold absolute pressure between when EGR valve is opened at specified value and when it is closed is larger or smaller than specified value. ✱2 driving cycle detection logic, monitoring once/1 driving	• EGR valve or its circuit • EGR passage • ECM

DTC CONFIRMATION PROCEDURE

WARNING:

- **When performing a road test, select a place where there is no traffic or possibility of a traffic accident and be very careful during testing to avoid occurrence of an accident.**
- **Road test should be carried out with 2 persons, a driver and a tester, on a level road.**

1) Turn ignition switch OFF.
   Clear DTC with ignition switch ON, check vehicle and environmental condition for :
   – Altitude (barometric pressure) : 2400 m, 8000 ft or less (560 mmHg, 75 kPa or more)
   – Ambient temp. : –10°C, 14°F or higher
   – Intake air temp. : 70°C, 122°F or lower
2) Start engine and warm it up to normal operating temperature (70 – 110°C, 158 – 230°F) and run it at idle for 5 min.
3) Increase vehicle speed to 50 – 55 mph, 80 – 88 km/h in 5th gear or in "D" range.
4) Hold throttle valve at that opening position for 2 min. or longer.
5) Increase engine speed to 4000 r/min. in 3rd gear or in "2" range.
6) Release accelerator pedal and with engine brake applied, keep vehicle coasting (fuel cut condition) till engine speed reaches 1500 r/min.

7) Stop vehicle (don't turn ignition switch OFF) and confirm test results according to following “Test Result Confirmation Flow Table”.

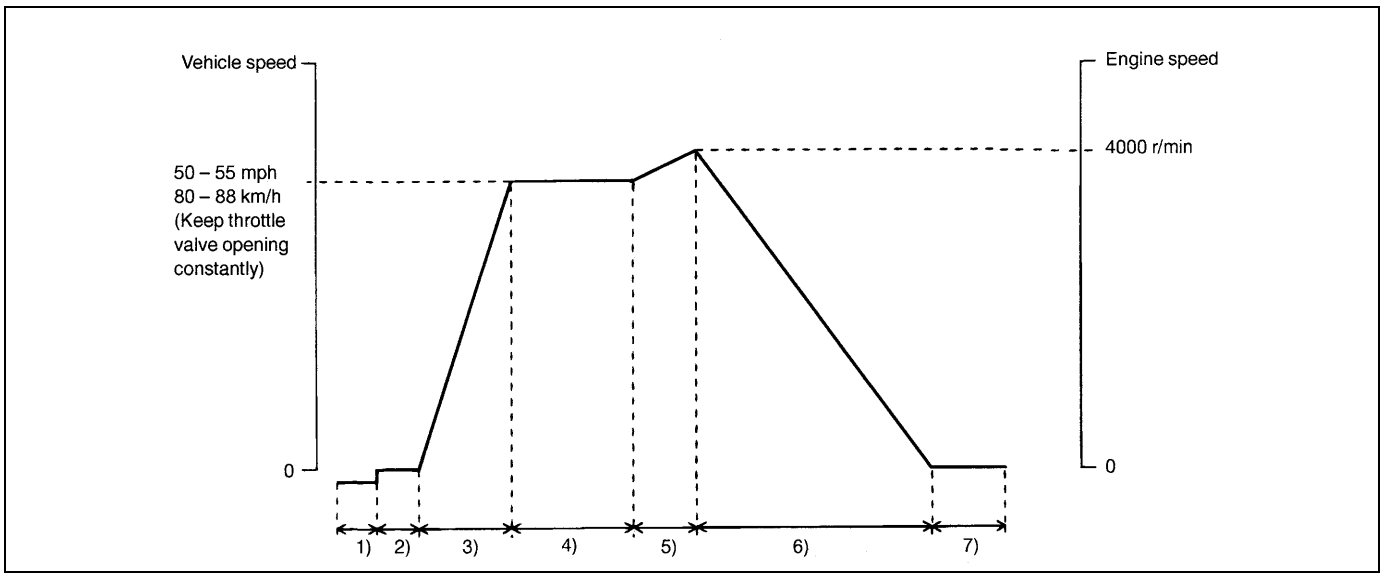

TEST RESULT CONFIRMATION FLOW TABLE

Step	Action	Yes	No
1	Check DTC in “DTC” mode and pending DTC in “ON BOARD TEST”. Is DTC or pending DTC displayed?	Proceed to applicable DTC flow table.	Go to Step 2.
2	Set scan tool to “READINESS TESTS” mode and check if testing has been completed. Is test completed?	No DTC is detected. (Confirmation test is completed)	Repeat DTC confirmation procedure.

INSPECTION

Step	Action	Yes	No
1	Was “ENGINE DIAG. FLOW TABLE” performed?	Go to Step 2.	Go to “ENGINE DIAG. FLOW TABLE”.
2	Do you have SUZUKI scan tool?	Go to Step 4.	Go to Step 5.
3	EGR Valve Operation Check : 1) With ignition switch OFF, install SUZUKI scan tool. 2) Check EGR system referring to Section 6E1. Is it in good condition?	Go to Step 4.	Go to Step 5.
4	MAP Sensor Check : 1) Check MAP sensor for performance referring to Section 6E1. Is check result satisfactory?	Intermittent trouble or faulty ECM. Check for intermittent referring to “Intermittent and Poor Connection” in Section 0A.	Repair or replace.

Step	Action	Yes	No
5	EGR Valve Power Supply Circuit Check : 1) With ignition switch OFF, disconnect EGR valve coupler. 2) With ignition switch ON, check voltage between terminal 2 and ground terminal 5 of EGR valve connector and ground. Is each voltage 10 – 14 V?	Go to Step 7.	Faulty “BLK/RED” wire.
6	EGR Valve Stepper Motor Coil Circuit Check : 1) With ignition switch OFF, connect EGR valve coupler and disconnect ECM couplers. 2) Check resistance between C41-5 and C41-2, 9, 8, 17 (Case of TYPE A. See NOTE) or C42-17, 18, 28, 29 (Case of TYPE B. See NOTE). Is each resistance 20 – 24 Ω at 20°C, 68°F?	Go to Step 8.	Faulty “GRN” (Case of TYPE A. See NOTE) or “GRY” (Case of TYPE B. See NOTE), “GRN/ORN”, “WHT/RED”, “BRN/YEL” wire or EGR valve.
7	MAP sensor Check : 1) Check MAP sensor for performance referring to Section 6E1. Is check result satisfactory?	EGR passage clogged or EGR valve malfunction. If all above are OK, intermittent trouble or faulty ECM. Check for intermittent referring to “Intermittent and Poor Connection” in Section 0A.	Repair or replace.

Fig. 1 for Step 5

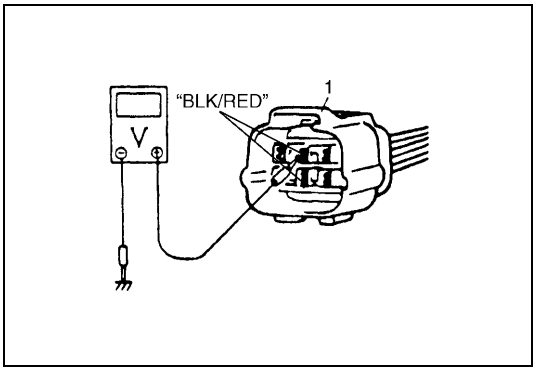

1. EGR valve connector

DTC P0420 CATALYST SYSTEM EFFICIENCY BELOW THRESHOLD

WIRING DIAGRAM / CIRCUIT DESCRIPTION

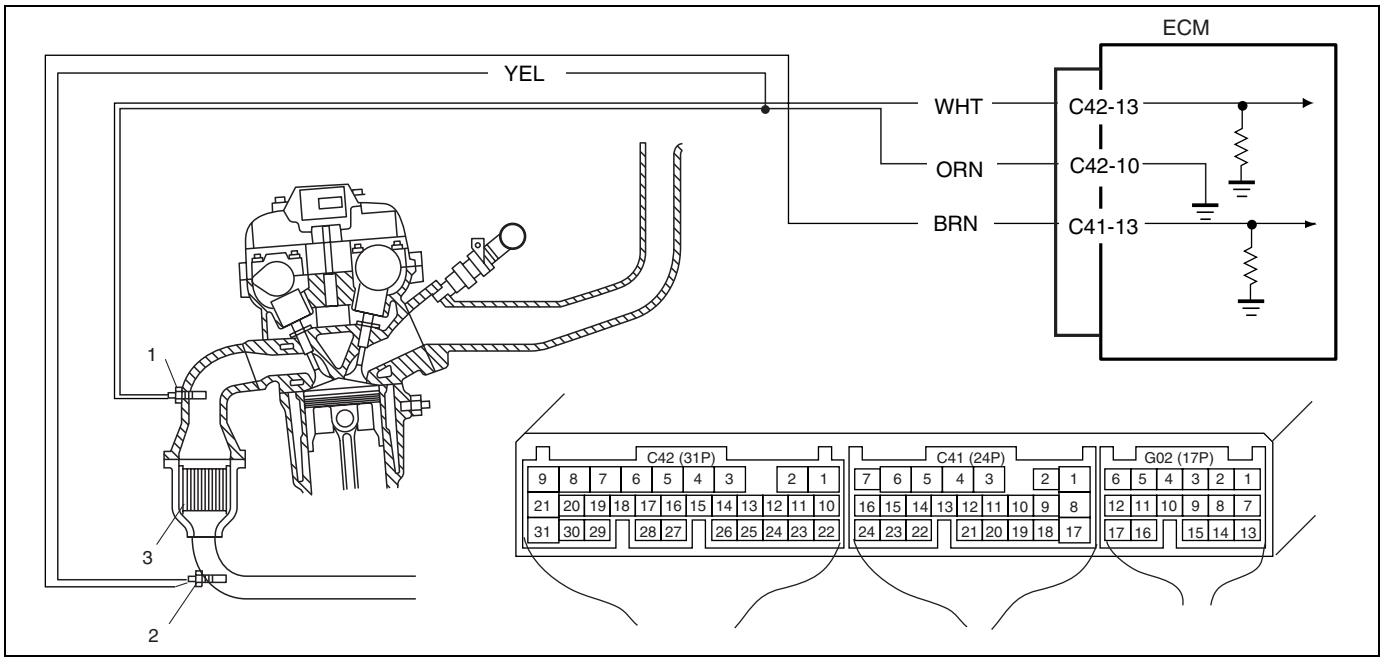

ECM monitors oxygen concentration in the exhaust gas which has passed the three way catalytic converter by HO2S-2 (2).
When the catalyst is functioning properly, the variation cycle of HO2S-2 (2) output voltage (oxygen concentration) is slower than that of HO2S-1 (1) output voltage because of the amount of oxygen in the exhaust gas which has been stored in the catalyst (3).

REFERENCE

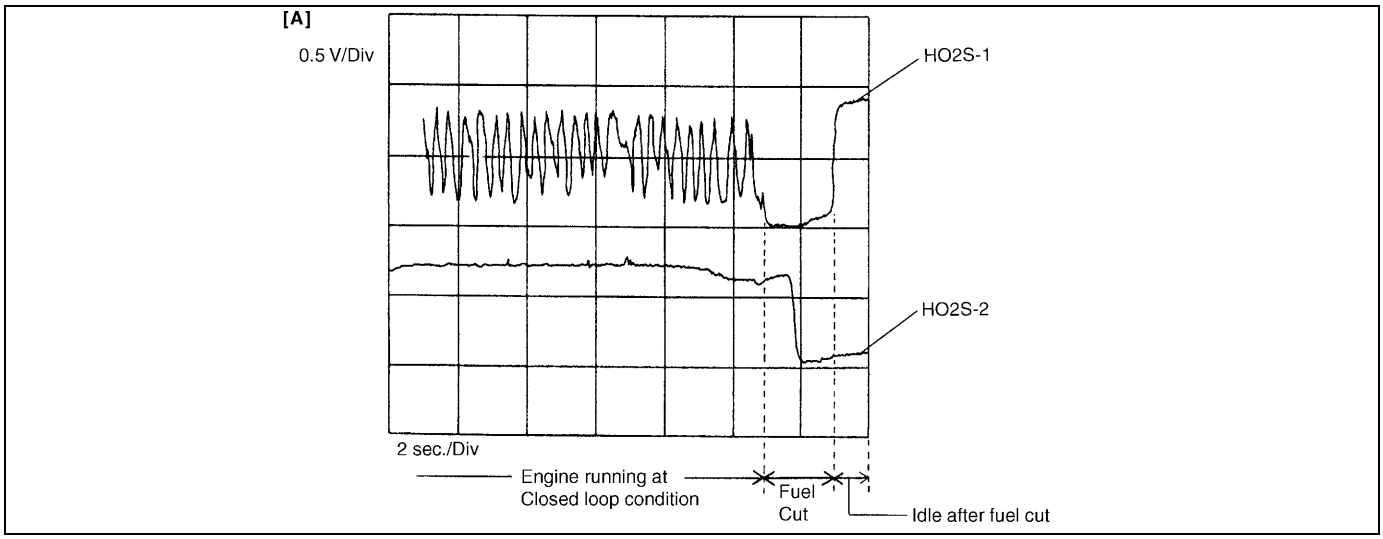

[A] : Oscilloscope Waveforms

DTC DETECTING CONDITION	POSSIBLE CAUSE
• While vehicle running at constant speed under other than high load. • Time from rich or lean switching command is output till HO2S-2 output voltage crosses 0.45 V is less than specified value. ✱2 driving cycle detection logic, monitoring once/1 driving	• Exhaust gas leak • Three way catalytic converter malfunction • Fuel system malfunction • HO2S-2 malfunction • HO2S-1 malfunction

DTC CONFIRMATION PROCEDURE

WARNING:

- **When performing a road test, select a place where there is no traffic or possibility of a traffic accident and be very careful during testing to avoid occurrence of an accident.**
- **Road test should be carried out with 2 persons, a driver and tester, on a level road.**

1) Turn ignition switch OFF.
   Clear DTC with ignition switch ON, check vehicle and environmental condition for :
   – Altitude (barometric pressure) : 2400 m, 8000 ft or less (560 mmHg, 75 kPa or more)
   – Ambient temp. : –10°C, 14°F or higher
   – Intake air temp. : 70°C, 158°F or lower
   – Engine coolant temp. : 70 – 110°C, 158 – 230°F
2) Start engine and drive vehicle at 35 – 45 mph, 55 – 65 km/h for 8 min. or longer.
   While this driving, if “Catalyst Monitoring TEST COMPLETED” is displayed in “READINESS TESTS” mode and DTC is not displayed in “DTC” mode, confirmation test is completed.
   If “TEST NOT COMPLETE” is still being displayed, continue test driving.
3) Decrease vehicle speed at 30 – 40 mph, 50 – 60 km/h, and hold throttle valve at that opening position for 2 min. and confirm that short term fuel trim vary within – 20% – +20% range.
4) Stop vehicle (do not turn ignition switch OFF) and confirm test results according to following “Test Result Confirmation Flow Table”.

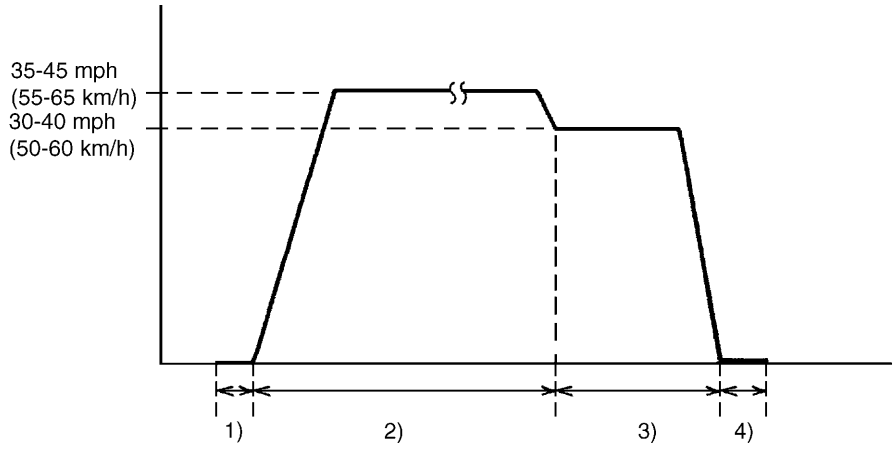

TEST RESULT CONFIRMATION FLOW TABLE

Step	Action	Yes	No
1	Check DTC in “DTC” mode and pending DTC in “ON BOARD TEST” or “PENDING DTC” mode. Is DTC or pending DTC displayed?	Proceed to applicable DTC Diag. Flow Table.	Go to Step 2.
2	Set scan tool to “READINESS TESTS” mode and check if testing has been completed. Is test completed?	No DTC is detected (confirmation test is completed).	Repeat DTC confirmation procedure.

INSPECTION

Step	Action	Yes	No
1	Was “ENGINE DIAG. FLOW TABLE” performed?	Go to Step 2.	Go to “ENGINE DIAG. FLOW TABLE”.
2	Check Short Term Fuel Trim. Did short term fuel trim vary within – 20% – +20% range in step 3) of DTC confirmation test?	Go to Step 3.	Check fuel system. Go to DTC P0171/P0172 Diag. Flow Table.
3	Check HO2S-2 for Output Voltage. Perform steps 1) through 9) of DTC confirmation procedure for DTC P0136 (HO2S-2 malfunction) and check output voltage of HO2S-2 then. Is over 0.6 V and below 0.3 V indicated?	Replace three way catalytic converter.	Check “BRN” and “YEL” wires for open and short, and connections for poor connection. If wires and connections are OK, replace HO2S-2.

DTC P0443 PURGE CONTROL VALVE CIRCUIT MALFUNCTION

WIRING DIAGRAM / CIRCUIT DESCRIPTION

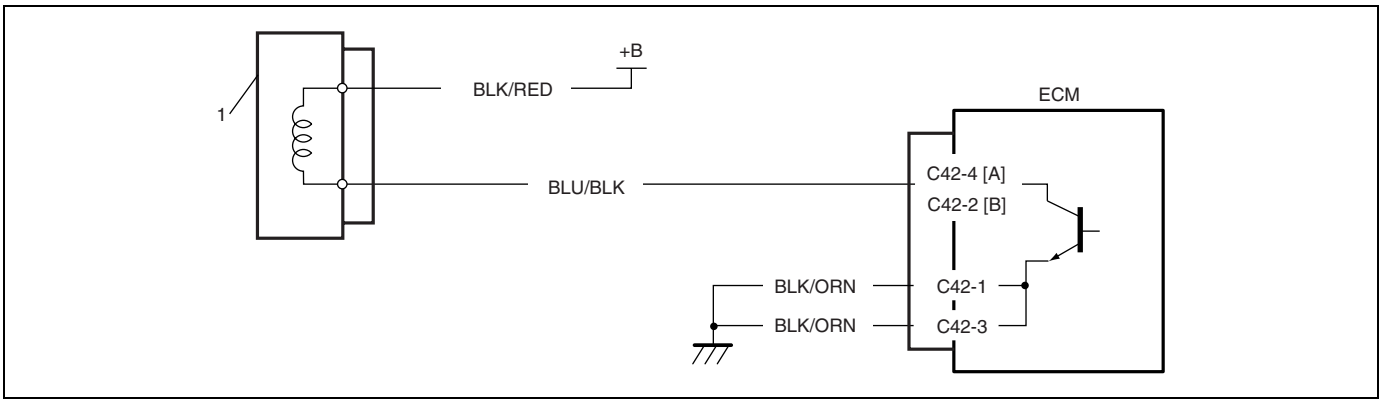

1. EVAP canister purge valve	[A] : Case of TYPE A is shown (See NOTE)	[B] : Case of TYPE B is shown (See NOTE)

NOTE:

For TYPE A and TYPE B, refer to NOTE in "ECM VOLTAGE VALUES TABLE" for applicable model.

DTC DETECTING CONDITION	POSSIBLE CAUSE
Canister Purge control valve circuit is opened or shorted.	• "BLU/BLK" circuit open or short • "BLK/RED" circuit open or short • Canister purge valve malfunction

DTC CONFIRMATION PROCEDURE

1) Clear DTC with ignition switch ON.
2) Select "DTC" mode on scan tool and check DTC.

INSPECTION

Step	Action	Yes	No
1	Check EVAP Canister Purge Valve operation. 1) With ignition switch OFF, disconnect coupler from canister purge valve. 2) Check resistance of EVAP canister purge valve. Resistance between two terminals : 30 – 34 Ω at 20°C (68°F) Resistance between terminal and body : 1 MΩ or higher Is it as specified?	"BLU/BLK" circuit open or short. "BLK/RED" circuit open or short.	Replace EVAP canister purge valve.

Fig. 1 for Step 1

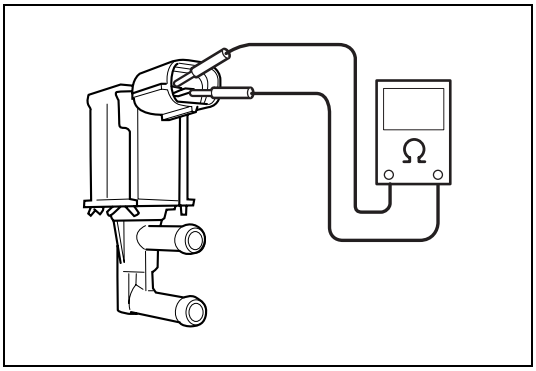

DTC P0480 RADIATOR COOLING FAN CONTROL SYSTEM MALFUNCTION

WIRING DIAGRAM / CIRCUIT DESCRIPTION

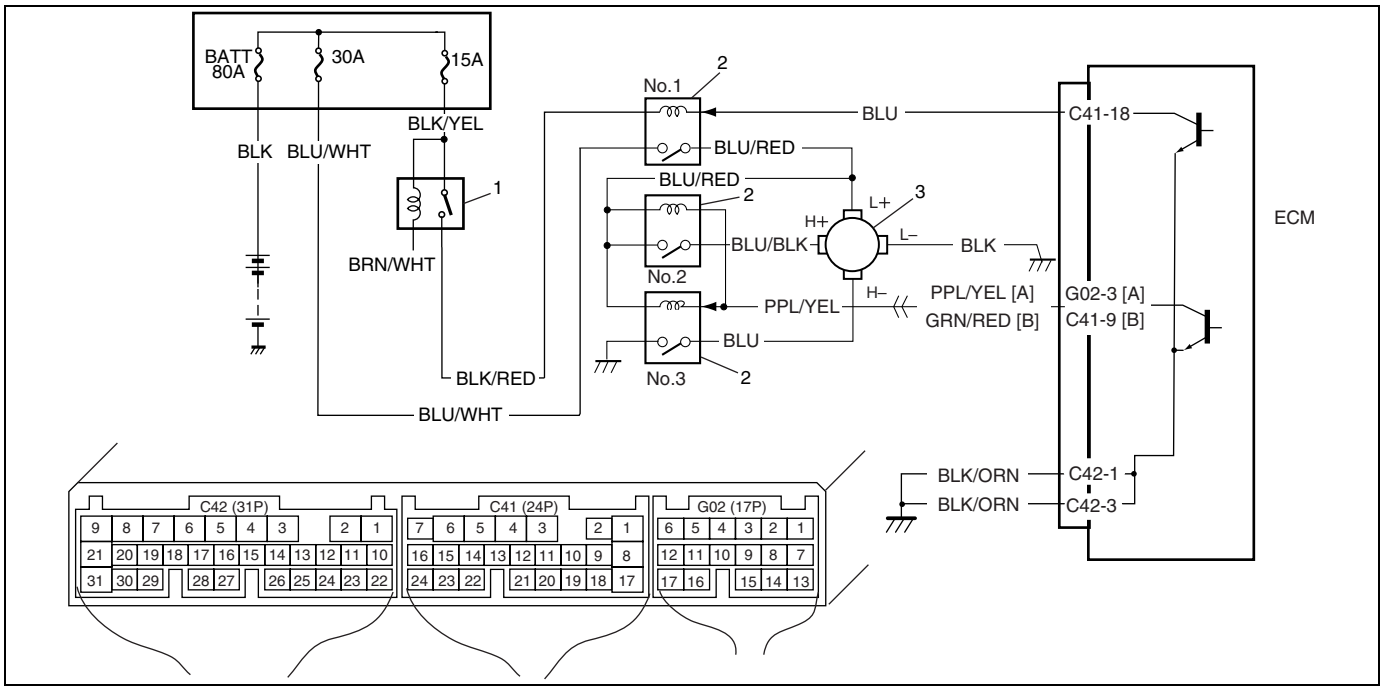

1. Main relay	[A] : Case of TYPE A is shown (See NOTE)
2. Radiator fan relay	[B] : Case of TYPE B is shown (See NOTE)
3. Radiator fan motor	

NOTE:

For TYPE A and TYPE B, refer to NOTE in "ECM VOLTAGE VALUES TABLE" for applicable model.

DTC DETECTING CONDITION	POSSIBLE CAUSE
Low voltage at terminal C41-18 when engine coolant temp. is below 97.5°C, 207.5°F. ✱2 driving cycle detection logic, continuous monitoring.	• "BLK/RED" or "BLU" circuit open or short • Radiator cooling fan relay malfunction • ECM malfunction

DTC CONFIRMATION PROCEDURE

1) Turn ignition switch OFF.
2) Clear DTC with ignition switch ON.
3) Warm up engine until radiator cooling fan starts to operate.
4) Check pending DTC in "ON BOARD TEST" or "PENDING DTC" mode and DTC in "DTC" mode.

INSPECTION

Step	Action	Yes	No
1	Was "ENGINE DIAG. FLOW TABLE" performed?	Go to Step 2.	Go to "ENGINE DIAG. FLOW TABLE".
2	Check Radiator Cooling Fan Relay and Its Circuit. 1) Turn ignition switch ON. 2) Check for voltage at terminal C41-18 of ECM connector connected, under following condition. See Fig. 1. When engine coolant temp. is lower than 97.5°C, 207.5°F and A/C switch turns OFF : 10 – 14 V Is voltage as specified?	Intermittent trouble or faulty ECM. Check for intermittent referring to "Intermittent and Poor Connection" in Section 0A.	Go to Step 3.

Step	Action	Yes	No
3	Check Radiator Cooling Fan Control Relay. 1) Turn ignition switch OFF and remove radiator cooling fan relay. 2) Check for proper connection to the relay at "BLK/RED", "BLU", "BLU/RED" and "BLU/BLK" wire terminals. 3) If OK, then measure resistance between terminals a and b. See Fig. 2 and 3. Is it 56 – 146 Ω?	"BLK/RED" or "BLU" circuit open or short. If wires and connections are OK, substitute a known-good ECM and recheck.	Replace radiator cooling fan relay.

Fig. 1 for Step 2

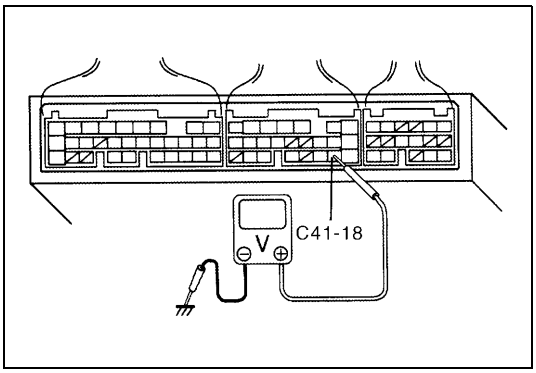

Fig. 2 for Step 3

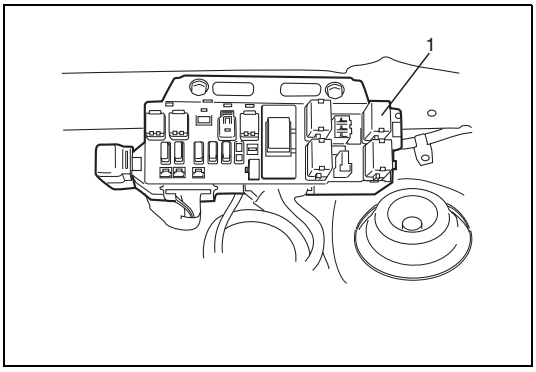

1. Radiator fan relay No.1

Fig. 3 for Step 3

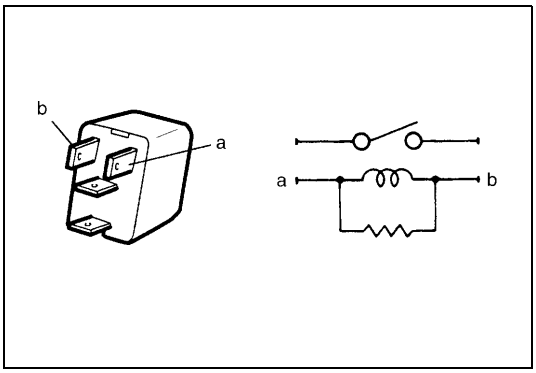

DTC P0500 (DTC NO.16) VEHICLE SPEED SENSOR (VSS) MALFUNCTION

WIRING DIAGRAM / CIRCUIT DESCRIPTION

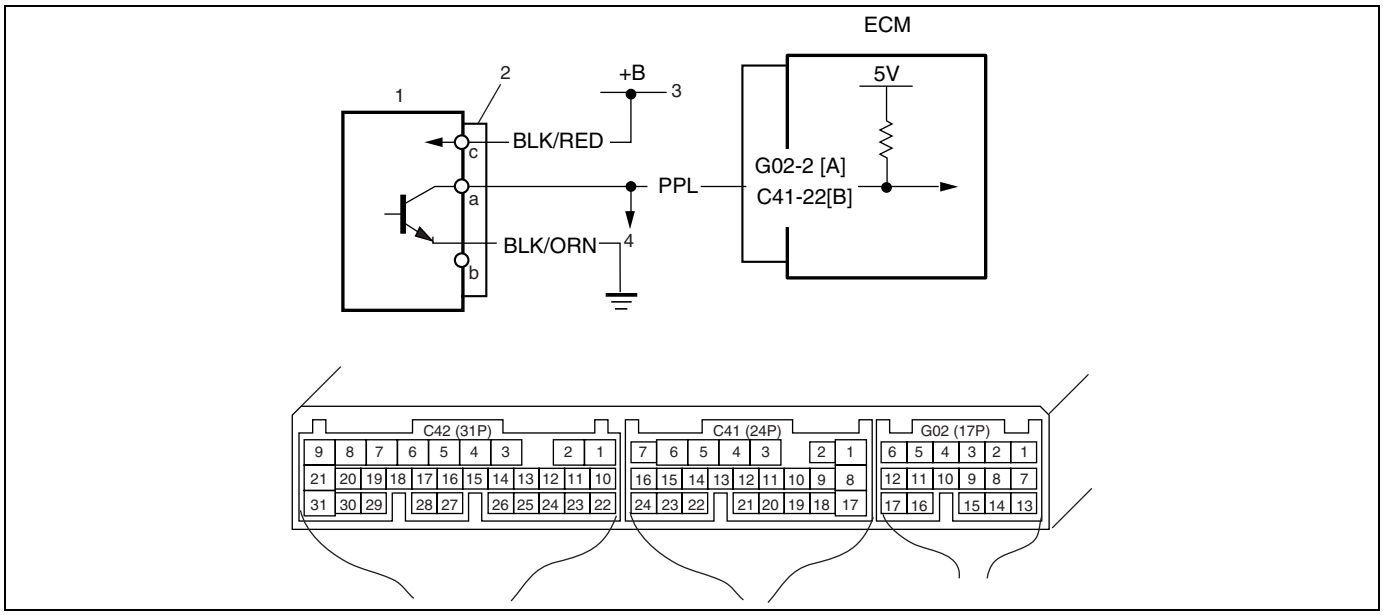

1. VSS (vehicle speed sensor)	3. Power supply from ignition switch
2. VSS connector	4. Speedometer, P/S control module and multi information display
[A] : Case of TYPE A is shown (See NOTE)	[B] : Case of TYPE B is shown (See NOTE)

NOTE:

For TYPE A and TYPE B, refer to NOTE in "ECM VOLTAGE VALUES TABLE" for applicable model.

DTC DETECTING CONDITION	POSSIBLE CAUSE
• VSS signal not inputted while vehicle running in "D" range or during fuel cut at deceleration. ✱2 driving cycle detection logic, continuous monitoring	• "BLK/ORN" circuit open • "PPL" or "BLK/RED" circuit open or short • VSS malfunction • ECM malfunction • Speedometer malfunction

DTC CONFIRMATION PROCEDURE

WARNING:

- **When performing a road test, select a place where there is no traffic or possibility of a traffic accident and be very careful during testing to avoid occurrence of an accident.**
- **Road test should be carried out with 2 persons, a driver and a tester.**

1) Clear DTC and warm up engine to normal operating temperature.
2) Increase vehicle speed to 50 mph, 80 km/h in 3rd gear or "2" range while observing vehicle speed displayed on scan tool.
3) Release accelerator pedal and with engine brake applied, keep vehicle coasting (fuel cut condition) for 4 sec. or more.
4) Check pending DTC and DTC.

INSPECTION

Step	Action	Yes	No
1	Was "ENGINE DIAG. FLOW TABLE" performed?	Go to Step 2.	Go to "ENGINE DIAG. FLOW TABLE".
2	Does speedometer indicate vehicle speed?	Go to Step 3.	Go to Step 5.

Step	Action	Yes	No
3	Check Vehicle Speed Signal. Is vehicle speed displayed on scan tool in step 2) and 3) of DTC confirmation procedure?	Intermittent trouble or faulty ECM. Check for intermittent referring to “Intermittent and Poor Connection” in Section 0A.	Go to Step 4.
4	Check VSS Signal Circuit. 1) Turn ignition switch to OFF position. 2) Disconnect combination meter connectors. Refer to Section 8. 3) Disconnect P/S control module connector (if equipped). 4) Turn ignition switch to ON position, without running engine. 5) Measure voltage from terminal “a” of VSS connector to ground. Is voltage within 4 – 5 V?	Faulty speedometer. Faulty P/S control module. Faulty multi information display.	“PPL” wire open or short. Poor connection of ECM connector terminal. If OK, substitute a known-good ECM and recheck.
5	Check VSS Power Supply. 1) With ignition switch at OFF position, disconnect VSS connector. 2) Turn ignition switch to ON position, without running engine. 3) Measure voltage from terminal “b” to “c” of VSS connector. See Fig. 1. Is voltage within 10 – 14 V?	Go to Step 6.	“BLK/RED” or “BLK/ORN” wire open or short.
6	Check VSS Signal Circuit. 1) Measure voltage from terminal “a” of VSS connector to ground. Is voltage more than 4 V?	Go to Step 7.	“PPL” wire open or short. Poor connection of ECM connector terminal. If OK, substitute a known-good ECM and recheck.
7	Check Signal Rotor. 1) Remove VSS. 2) Visually inspect VSS sensor signal rotor for damage. Was any damage found?	Faulty VSS signal rotor.	Poor connection of VSS connector terminal. If OK, substitute a known-good VSS and recheck.

Fig. 1 for Step 5

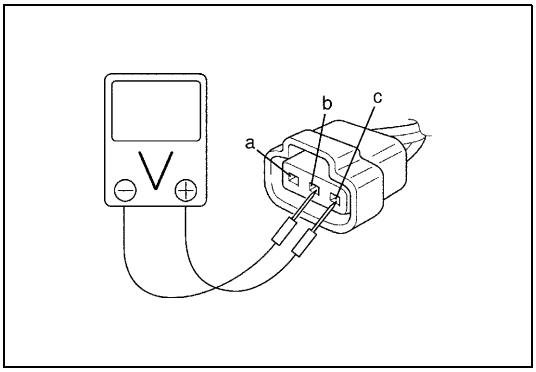

Fig. 2 for Step 4 and Step 6

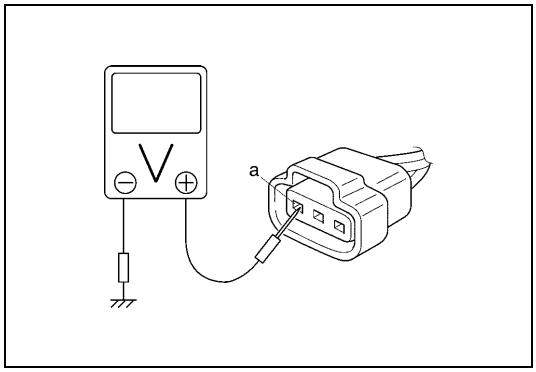

DTC P0505 (DTC NO.26) IDLE CONTROL SYSTEM MALFUNCTION

CIRCUIT DESCRIPTION

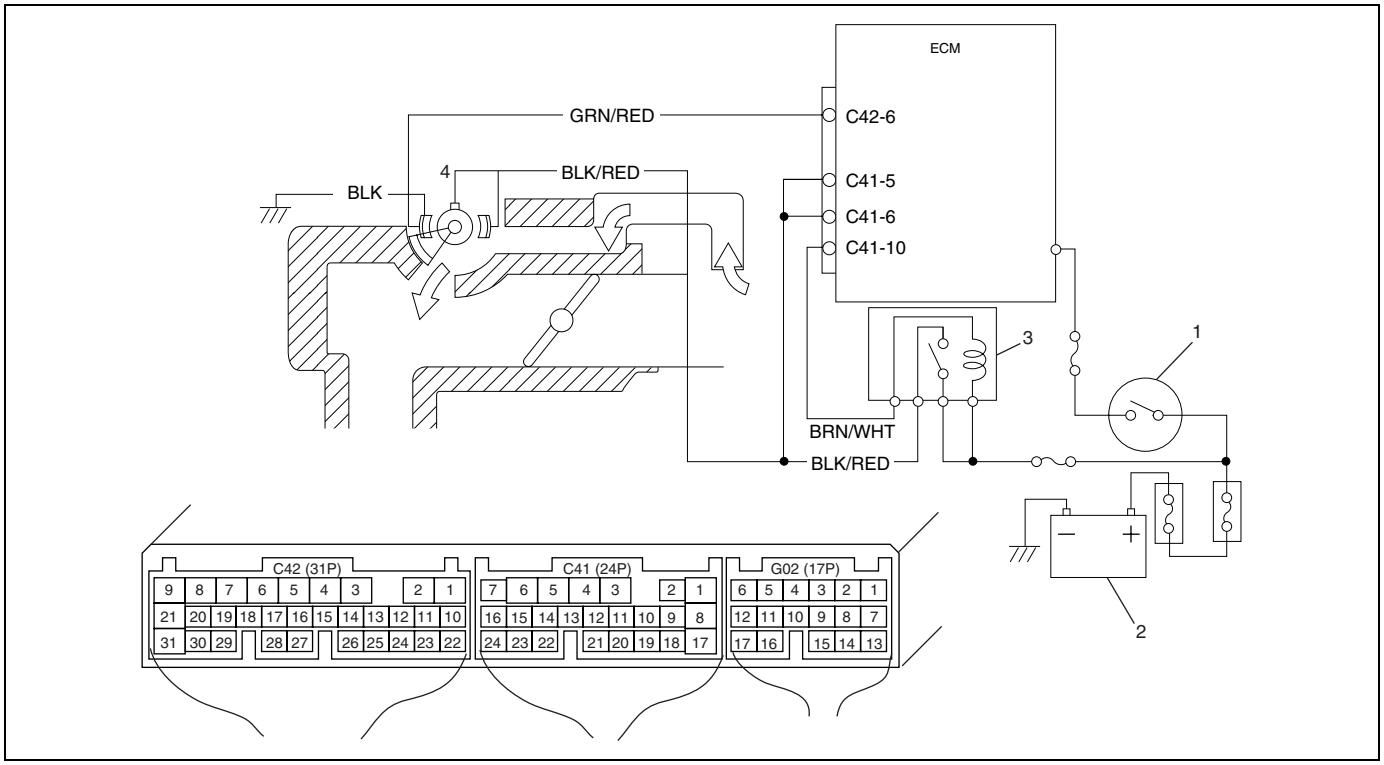

1. Ignition switch	3. Main relay
2. Battery	4. IAC valve

DTC DETECTING CONDITION	POSSIBLE CAUSE
• No closed signal to IAC valve is detected after engine start. ✱2 driving cycle detection logic, continuous monitoring.	• “BLK/RED”, “GRN/RED” or “BLK” circuit open or short • IAC valve malfunction • ECM malfunction

DTC CONFIRMATION PROCEDURE

1) Turn ignition switch OFF.
2) Clear DTC with ignition switch ON.
3) Start engine and run it at idle for 1 min.
4) Check DTC and pending DTC.

INSPECTION

Step	Action	Yes	No
1	Was “ENGINE DIAG. FLOW TABLE” performed?	Go to Step 2.	Go to “ENGINE DIAG. FLOW TABLE”.
2	Is SUZUKI scan tool available?	Go to Step 3.	Go to Step 4.
3	Check Idle Air Control System. 1) Connect SUZUKI scan tool to DLC with ignition switch OFF, set parking brake and block drive wheels. 2) Warm up engine to normal operating temperature. 3) Clear DTC and select “MISC TEST” mode on SUZUKI scan tool. See Fig. 1. Is it possible to control (increase and reduce) engine idle speed by using SUZUKI scan tool?	Intermittent trouble or faulty ECM. Check for intermittent referring to “Intermittent and Poor Connection” in Section 0A.	Go to Step 5.
4	Check Idle Air Control System. 1) Remove IAC valve from throttle body referring to “IAC Valve Removal” in Section 6E1. 2) Check IAC valve for operation referring to “IAC Valve Inspection” in Section 6E1. See Fig. 2. Is check result satisfactory?	Intermittent trouble or faulty ECM. Check for intermittent referring to “Intermittent and Poor Connection” in Section 0A.	Go to Step 5.
5	Check Wire Harness for open and short. 1) Turn ignition switch OFF. 2) Disconnect IAC valve connector. 3) Check for proper connection to IAC valve at each terminals. 4) If OK, disconnect ECM connector. 5) Check for proper connection to ECM at C42-6 terminal. 6) If OK, check “BLK/RED”, “GRN/RED” and “BLK” circuit for open and short. Are they in good condition?	Replace IAC valve and recheck.	Repair or replace.

Fig. 1 for Step 3

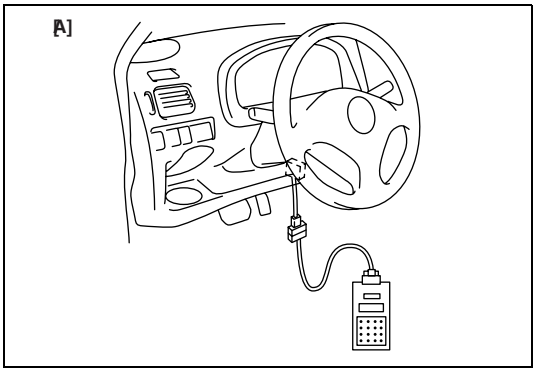

[A] : When using SUZUKI scan tool:

Fig. 2 for Step 4

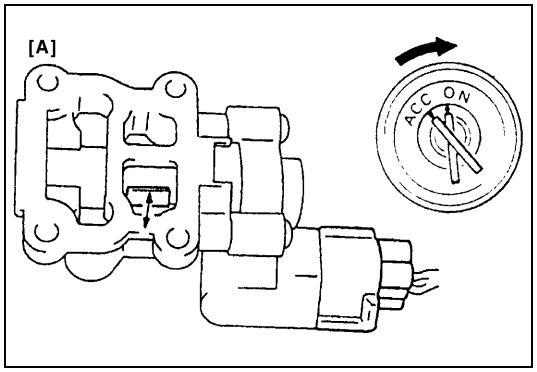

[A] : Without using SUZUKI scan tool:

DTC P1450 BAROMETRIC PRESSURE SENSOR LOW/HIGH INPUT
DTC P1451 BAROMETRIC PRESSURE SENSOR PERFORMANCE PROBLEM

WIRING DIAGRAM / CIRCUIT DESCRIPTION

Barometric pressure sensor is installed in ECM.

DTC DETECTING CONDITION	POSSIBLE CAUSE
DTC P1450 : Barometric pressure : Sensor voltage is 4.7 V higher, or 1.6 V or lower	• ECM (barometric pressure sensor) malfunction
DTC P1451 : • Vehicle stopped • Engine cranking • Difference between barometric pressure and intake manifold absolute pressure is 26 kPa, 200 mmHg or more • Difference between intake manifold absolute pressure at engine start and the pressure after engine start is 1.3 kPa, 10 mmHg or less. ✱2 driving cycle detection logic, monitoring once/1 driving.	• Manifold absolute pressure sensor and its circuit malfunction • ECM (barometric pressure sensor) malfunction

DTC CONFIRMATION PROCEDURE

1) Turn ignition switch OFF.
2) Clear DTC with ignition switch ON.
3) Turn ignition switch ON for 2 sec., crank engine for 2 sec. and run it at idle for 1 min.
4) Check pending DTC in “ON BOARD TEST” or “PENDING DTC” mode and DTC in “DTC” mode.

INSPECTION

DTC P1450 :

Substitute a known-good ECM and recheck.

DTC P1451 :

NOTE:

Note that atmospheric pressure varies depending on weather conditions as well as altitude. Take that into consideration when performing these check.

Step	Action	Yes	No
1	Check Barometric Pressure Valve. 1) Connect scan tool to DLC with ignition switch OFF. 2) Turn ignition switch ON and select “DATA LIST” mode on scan tool. 3) Check manifold absolute pressure. See Fig. 1. Is it barometric pressure (approx. 100 kPa, 760 mmHg) at sea level?	Substitute a known-good ECM and recheck.	Go to Step 2.

Step	Action	Yes	No
2	Check MAP Sensor. 1) Remove MAP sensor from intake manifold and connect vacuum pump gauge to MAP sensor. See Fig. 2. 2) Connect scan tool to DLC and turn ignition switch ON. 3) Check intake manifold absolute pressure displayed on scan tool for specified valve. See Table 1. Is check result satisfactory?	Check air intake system for air being drawn in and engine compression. If OK, then substitute a known-good ECM and recheck.	Replace MAP sensor.

Table 1

Applying Vacuum	Displayed Value on Scan Tool
0	Barometric pressure (Approx. 100 kPa, 760 mmHg)
27 kPa 200 mmHg	Barometric pressure – 27 kPa (Approx. 73 kPa, 560 mmHg)
67 kPa 500 mmHg	Barometric pressure – 67 kPa (Approx. 33 kPa, 260 mmHg)

Fig. 1 for Step 1

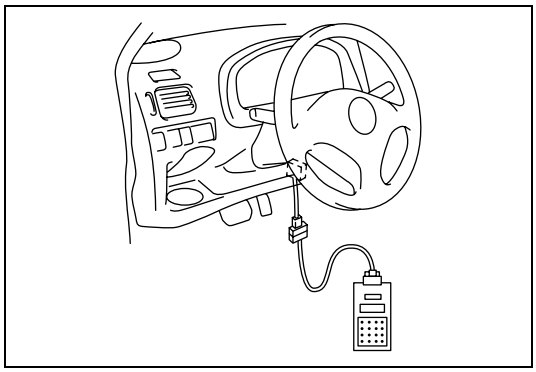

Fig. 2 for Step 2

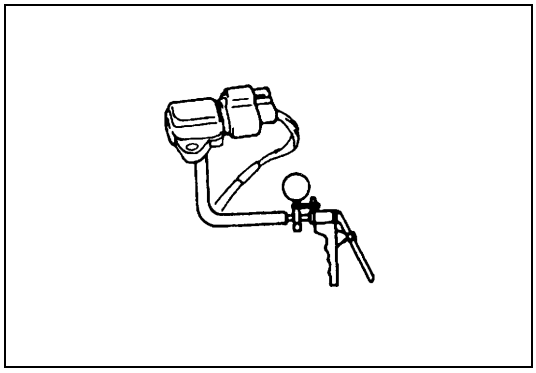

DTC P1500 ENGINE STARTER SIGNAL CIRCUIT MALFUNCTION

CIRCUIT DESCRIPTION

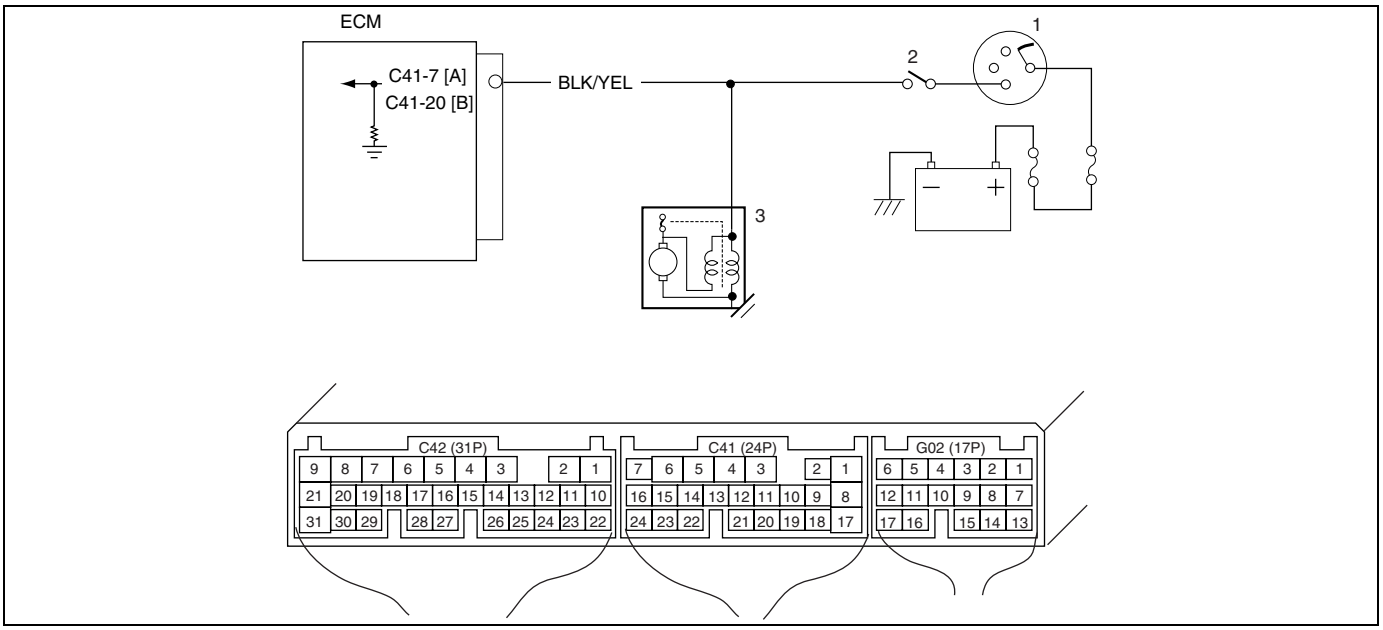

1. Ignition switch	2. Transmission range switch (A/T)	3. Starter motor
[A] : Case of TYPE A is shown (See NOTE)	[B] : Case of TYPE B is shown (See NOTE)	

NOTE:

For TYPE A and TYPE B, refer to NOTE in "ECM VOLTAGE VALUES TABLE" for applicable model.

DTC DETECTING CONDITION	POSSIBLE CAUSE
• Low voltage at terminal C41-7 (Case of TYPE A. See NOTE) or C41-20 (Case of TYPE B. See NOTE) when cranking engine or • High voltage at terminal C41-7 (Case of TYPE A. See NOTE) or C41-20 (Case of TYPE B. See NOTE) after starting engine. ✱2 driving cycle detection logic, continuous monitoring.	• "BLK/YEL" circuit open • ECM malfunction

DTC CONFIRMATION PROCEDURE

1) Turn ignition switch OFF.
2) Clear DTC with ignition switch ON, crank engine and run it at idle for 3 min.
3) Check pending DTC in "ON BOARD TEST" or "PENDING DTC" mode and DTC in "DTC" mode.

INSPECTION

Step	Action	Yes	No
1	Was "ENGINE DIAG. FLOW TABLE" performed?	Go to Step 2.	Go to "ENGINE DIAG. FLOW TABLE".
2	Check Terminal Voltage. 1) Check for voltage at terminal C41-7 (Case of TYPE A. See NOTE) or C41-20 (Case of TYPE B. See NOTE) of ECM connector connected, under following condition. **While engine cranking : 6 – 10 V** **After starting engine : 0 V** Is voltage as specified?	Poor C41-7 (Case of TYPE A. See NOTE) or C41-20 (Case of TYPE B. See NOTE) connection or intermittent trouble. Check for intermittent referring to "Intermittent and Poor Connection" in Section 0A. If wire and connections are OK, substitute a known-good ECM and recheck.	"BLK/YEL" circuit open.

DTC P1510 ECM BACK-UP POWER SUPPLY MALFUNCTION

WIRING DIAGRAM / CIRCUIT DESCRIPTION

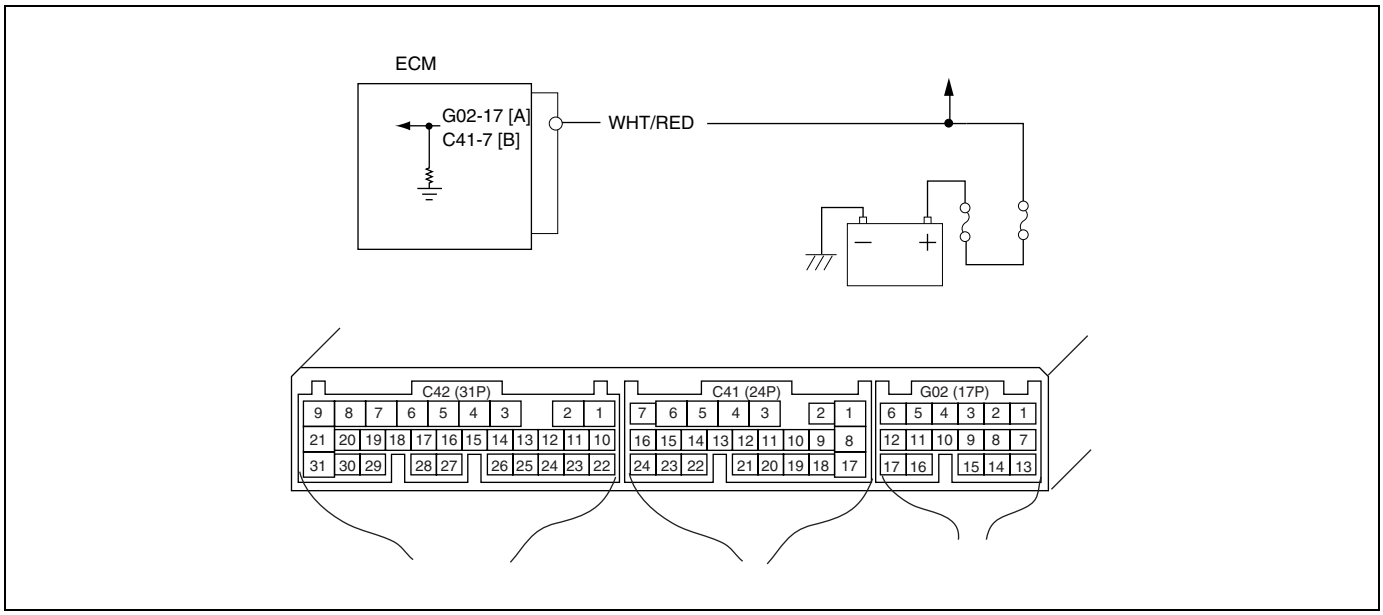

[A] : Case of TYPE A is shown (See NOTE)	[B] : Case of TYPE B is shown (See NOTE)

Battery voltage is supplied so that diagnostic trouble code memory, values for engine control learned by ECM, etc. are kept in ECM even when the ignition switch is turned OFF.

NOTE:

For TYPE A and TYPE B, refer to NOTE in "ECM VOLTAGE VALUES TABLE" for applicable model.

DTC DETECTING CONDITION	POSSIBLE CAUSE
• Low voltage at terminal G02-17 (Case of TYPE A. See NOTE) or C41-7 (Case of TYPE B. See NOTE) after starting engine.	• "WHT/RED" circuit open • ECM malfunction

DTC CONFIRMATION PROCEDURE

1) Clear DTC, start engine and run it at idle for 1 min.
2) Select "DTC" mode on scan tool and check DTC.

INSPECTION

Step	Action	Yes	No
1	Check Terminal Voltage. 1) Check for voltage at terminal G02-17 (Case of TYPE A. See NOTE) or C41-7 (Case of TYPE B. See NOTE) of ECM connector connected, under each condition, ignition switch OFF and engine running. Is it 10 – 14 V at each condition?	Poor G02-17 (Case of TYPE A. See NOTE) or C41-7 (Case of TYPE B. See NOTE) connection or intermittent trouble. Check for intermittent referring to "Intermittent and Poor Connection" in Section 0A. If wire and connections are OK, substitute a known- good ECM and recheck.	"WHT/RED" circuit open.

DTC P1600 SERIAL COMMUNICATION PROBLEM BETWEEN ECM AND TCM

WIRING DIAGRAM

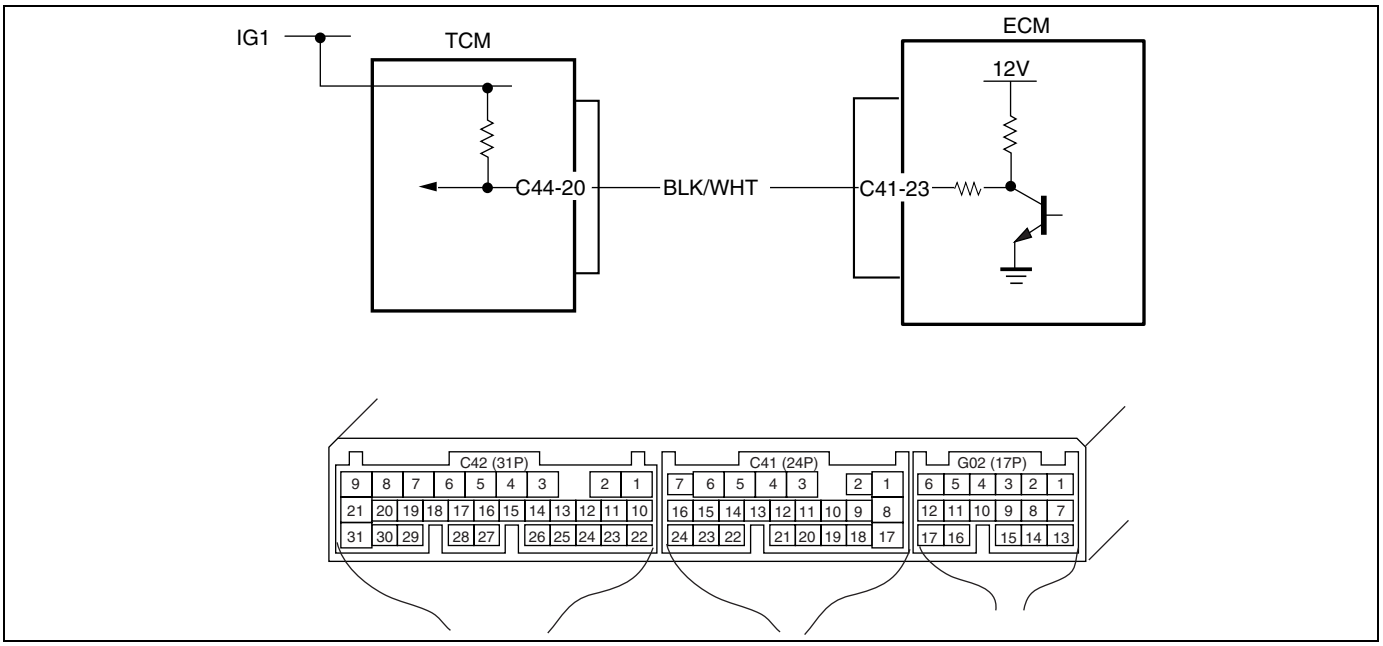

CIRCUIT DESCRIPTION

The serial data line is pulled up to about 12 V by ECM and TCM transmits information to ECM through it by controlling its grounding.
TCM constantly sends information while ignition switch is ON as to whether judgement was made or not with respect to all detectable DTCs as well as whether or not abnormality exists after judgement.

DTC DETECTING CONDITION	POSSIBLE CAUSE
No signal inputted from TCM to ECM or check sum error while engine running	• "BLK/WHT" circuit open or short • TCM power or ground circuit open • TCM malfunction • ECM malfunction

DTC CONFIRMATION PROCEDURE

1) Turn ignition switch OFF.
2) Clear DTC with ignition switch ON.
3) Start engine and run it at idle for 1 min.
4) Select "DTC" mode on scan tool and check DTC.

INSPECTION

Step	Action	Yes	No
1	Was "ENGINE DIAG. FLOW TABLE" performed?	Go to Step 2.	Go to "ENGINE DIAG. FLOW TABLE".
2	Check Signal Voltage. Check voltage between terminal C41-23 and body ground with ignition switch ON. Does it change between 0 – 12 V? See Fig. 1.	Intermittent trouble or faulty ECM or TCM. Check for intermittent trouble referring to "Intermittent and poor connection" in Section 0A.	Go to Step 3.

Step	Action	Yes	No
3	Is it about 12 V at Step 2?	"BLK/WHT" wire open, poor C44-20 connection or TCM power or ground circuit open. If wires and connections are OK, substitute a known-good TCM and recheck.	Go to Step 4.
4	Check Signal Circuit. 1) Disconnect TCM coupler with ignition switch OFF. 2) Check voltage between C44-20 terminal and body ground with ignition switch ON. See Fig. 2. Is it about 12 V?	Check TCM power and ground circuit for open. If OK, substitute a known-good TCM and recheck.	"BLK/WHT" wire shorted to ground or poor C44-23 terminal connection. If wire and connection are OK, substitute a known-good ECM and recheck.

Fig. 1 for Step 2

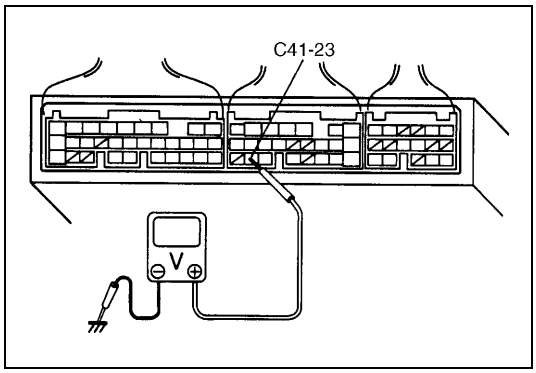

Fig. 2 for Step 4

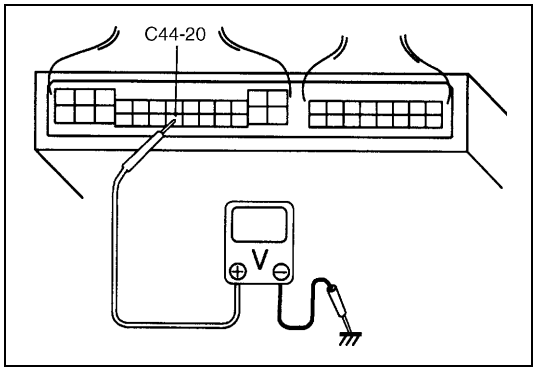

DTC P1717 A/T DRIVE RANGE (PARK/NEUTRAL POSITION) SIGNAL CIRCUIT MALFUNCTION

WIRING DIAGRAM / CIRCUIT DESCRIPTION

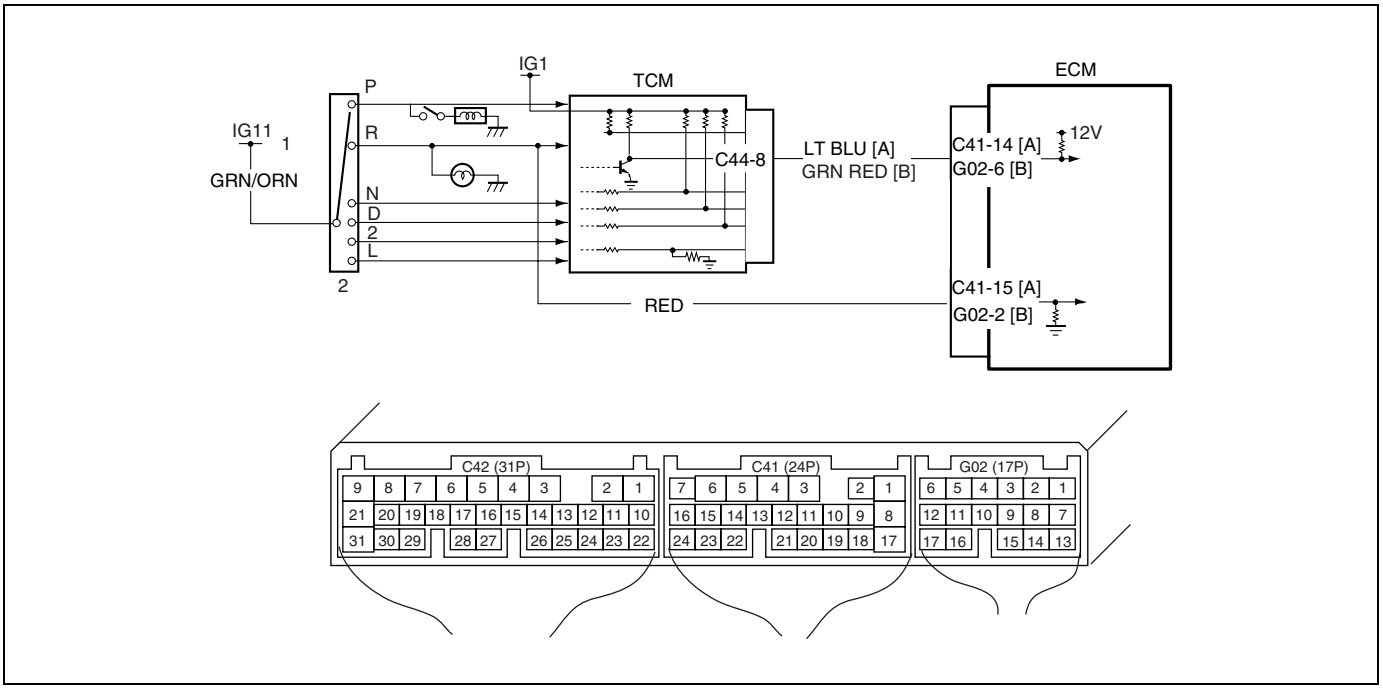

1. From ignition switch	2. Transmission range switch
[A] : Case of TYPE A is shown (See NOTE)	[B] : Case of TYPE B is shown (See NOTE)

NOTE:

For TYPE A and TYPE B, refer to NOTE in "ECM VOLTAGE VALUES TABLE" for applicable model.

DTC DETECTING CONDITION	POSSIBLE CAUSE
• "D" range signal not inputted (Park/Neutral position signal inputted) to ECM while vehicle running ✱2 driving cycle detection logic, continuous monitoring.	• "LT BLU" circuit open • Transmission range switch malfunction • "R", "D", "2" or "L" range signal circuit open • TCM power or ground circuit open • TCM malfunction • ECM malfunction

DTC CONFIRMATION PROCEDURE

WARNING:

- **When performing a road test, select a place where there is no traffic or possibility of a traffic accident and be very careful during testing to avoid occurrence of an accident.**
- **Road test should be carried out with 2 persons, a driver and a tester.**

1) Turn ignition switch OFF.
2) Clear DTC with ignition switch ON.
3) Start engine and shift selector lever to "D" range.
4) Increase vehicle speed to higher than 20 mph, 32 km/h and then stop vehicle.
5) Repeat above step 4) 9 times.
6) Shift selector lever to "2" range and repeat above step 4) and 5).
7) Shift selector lever to "L" range and repeat above step 4) and 5).
8) Check DTC in "DTC" mode and pending DTC in "ON BOARD TEST" or "PENDING DTC" mode.

INSPECTION

Step	Action	Yes	No
1	Was “ENGINE DIAG. FLOW TABLE” performed?	Go to Step 2.	Go to “ENGINE DIAG. FLOW TABLE”.
2	Is SUZUKI scan tool available?	Go to Step 3.	Go to Step 4.
3	Check PNP Signal (“D” range signal). 1) Connect SUZUKI scan tool to DLC with ignition switch OFF. See Fig. 1. 2) Turn ignition switch ON and check PNP signal (“P/N” or “D” range) on display when shifting selector lever to each range. Is “D” range on display (Is 0 – 1 V indicated) no matter which of “R”, “D”, “2” and “L” range positions selector lever may be at? See Table 1.	Intermittent trouble or faulty ECM. Check for intermittent referring to “Intermittent and poor connection” in Section 0A.	Go to Step 5.
4	Check PNP Signal (“D” range signal). 1) Turn ignition switch ON. 2) Check voltage at terminal C41-14 (Case of TYPE A. See NOTE) or G02-6 (Case of TYPE B. See NOTE) of ECM connector connected. See Fig. 2. Is “D” range on display (Is 0 – 1 V indicated) no matter which of “R”, “D”, “2” and “L” range positions selector lever may be at? See Table 1.	Intermittent trouble or faulty ECM. Check for intermittent referring to “Intermittent and poor connection” in Section 0A.	Go to Step 5.
5	Is “P/N range on display (Is 10 – 14 V indicated) when selector lever is at one of “R”, “D”, “2” and “L” range positions only?	Check transmission range switch and circuits referring to section 7B.	Go to Step 6.
6	Check PNP Signal Circuit. 1) Turn ignition switch OFF. 2) Disconnect TCM connectors. 3) Check for proper connection to TCM at terminal C44-8. 4) If OK, then check voltage at terminal C44-8 in TCM connector disconnected, with ignition switch ON. Is it 10 – 14 V? See Fig. 3	“GRN/ORN” circuit open, poor transmission range switch connector connection, select cable maladjusted, transmission range sensor maladjusted or transmission range sensor malfunction. If all above are OK, substitute a known-good TCM and recheck.	“LT BLU” (Case of TYPE A. See NOTE) or “GRN RED” (Case of TYPE B. See NOTE) circuit open or poor C41-14 (Case of TYPE A. See NOTE) or G02-6 (Case of TYPE B. See NOTE) connection. If wire and connection are OK, substitute a known-good ECM and recheck.

Fig. 1 for Step 3

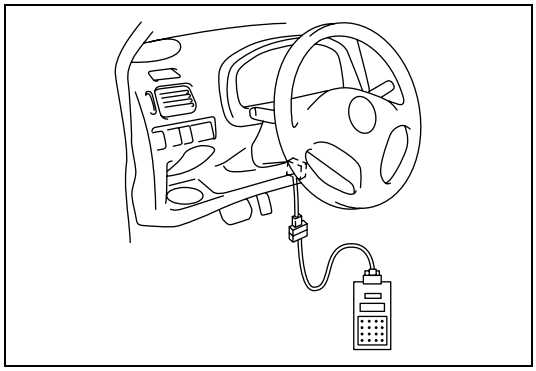

Fig. 2 for Step 4

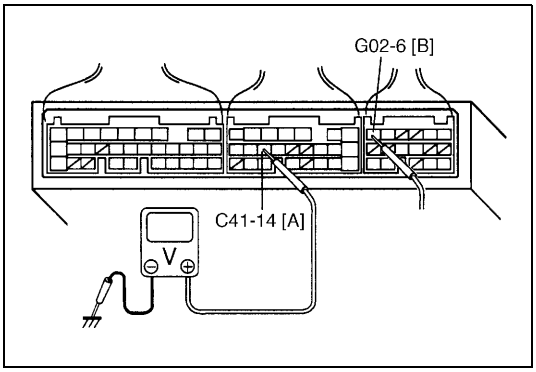

[A] : Case of TYPE A is shown (See NOTE)
[B] : Case of TYPE B is shown (See NOTE)

Table 1 for Step 3 and 4

		Scan tool or voltmeter	
		SUZUKI SCAN TOOL	VOLTAGE AT C41-14
Selector lever position	"P" and "N" range	P/N range	10 – 14V
	"R", "D", "2" and "L" range	D range	0 – 1V

Fig. 3 for Step 6

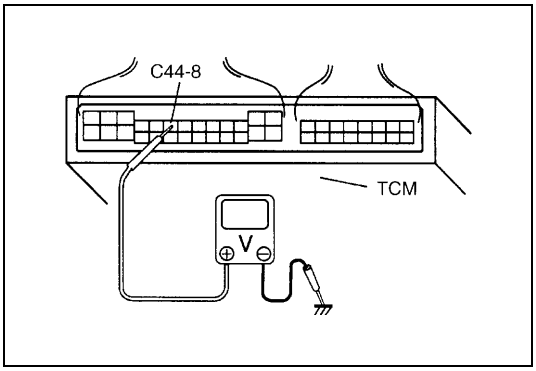

TABLE B-1 FUEL INJECTOR CIRCUIT CHECK

WIRING DIAGRAM

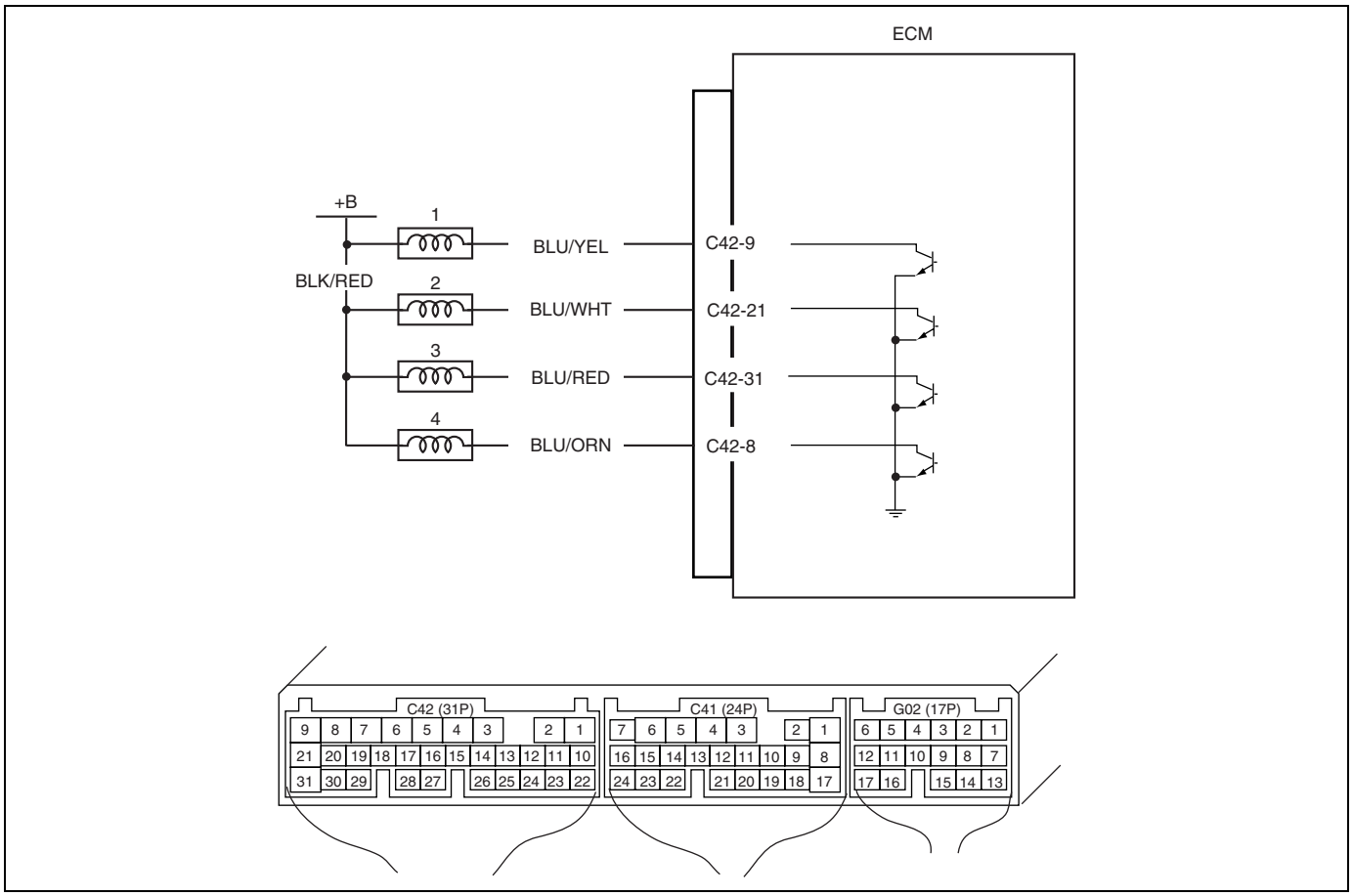

1. No.1 injector	3. No.3 injector
2. No.2 injector	4. No.4 injector

INSPECTION

Step	Action	Yes	No
1	Was “ENGINE DIAG. FLOW TABLE” performed?	Go to Step 2.	Go to “ENGINE DIAG. FLOW TABLE”.
2	Check Injector for operating sound. Using sound scope, check each injector for operating sound at engine cranking. Do all 4 injector make operating sound?	Fuel injector circuit is in good condition.	Go to Step 3.
3	Dose none of 4 injectors make operating sound at Step 2?	Go to Step 4.	Check coupler connection and wire harness of injector not making operating sound and injector itself (Refer to Section 6E1).
4	Check power circuit of injectors for open and short. Is it normal?	Check all 4 injectors for resistance respectively. If resistance is OK, substitute a known-good ECM and recheck.	Power circuit open or short.

TABLE B-2 FUEL PUMP AND ITS CIRCUIT CHECK

WIRING DIAGRAM

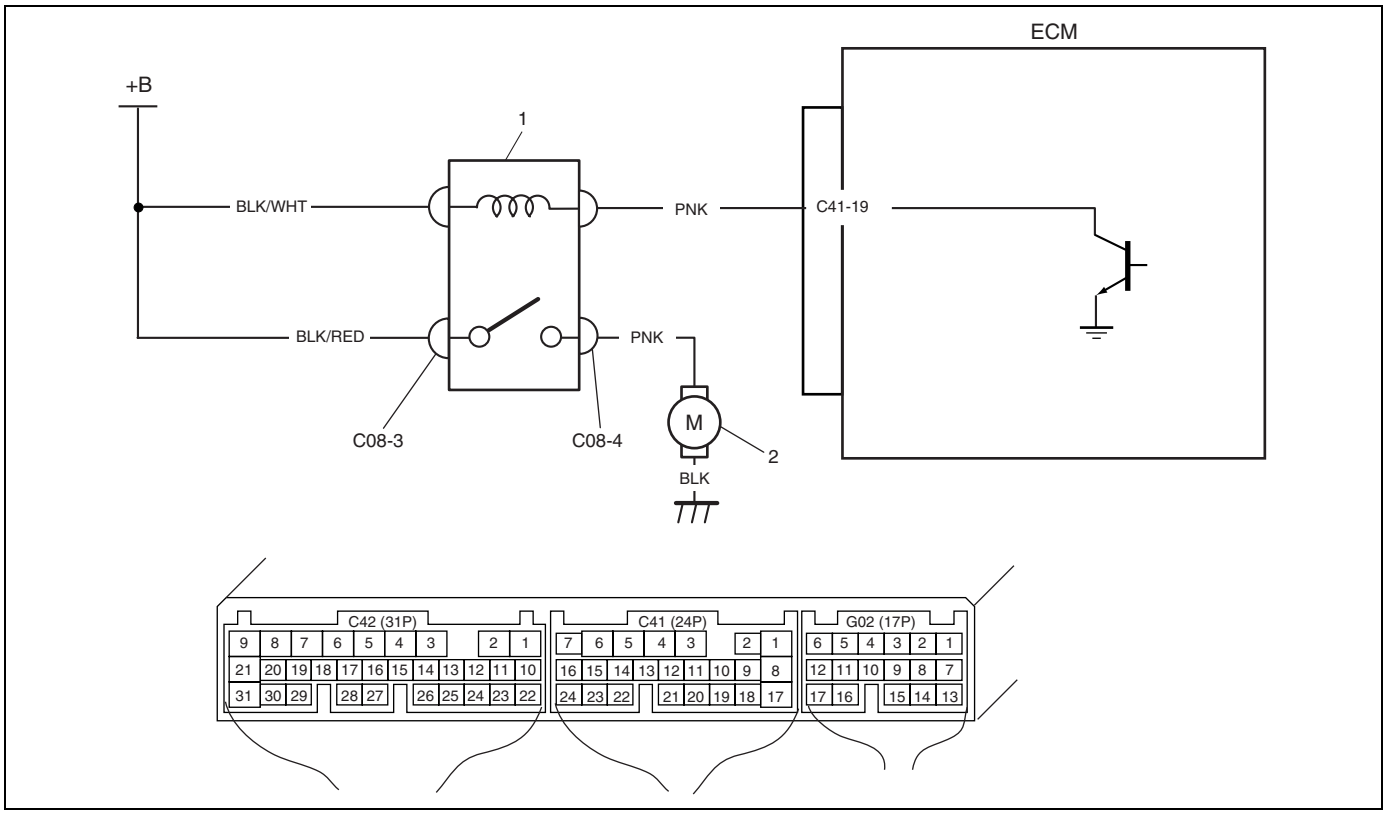

1. Fuel pump relay	2. Fuel pump

INSPECTION

CAUTION:
Check to make sure that connection is made between correct terminals. Wrong connection can cause damage to ECM, wire harness, etc.

Step	Action	Yes	No
1	Was “ENGINE DIAG. FLOW TABLE” performed?	Go to Step 2.	Go to “ENGINE DIAG. FLOW TABLE”.
2	Check Fuel Pump Control System for operation. See Fig. 1. Is fuel pump heard to operate for 2 sec. after ignition switch ON?	Fuel pump circuit is in good condition.	Go to Step 3.
3	Check Fuel Pump for operation. 1) Remove fuel pump relay from relay box with ignition switch OFF. 2) Check for proper connection to relay at each terminal. 3) If OK, using service wire, connect terminals C08-3 and C08-4 of relay connector. See Fig. 2. Is fuel pump heard to operate at ignition switch ON?	Go to Step 4.	“PNK”, “BLK” or “BLK/RED” circuit open or fuel pump malfunction.

Step	Action	Yes	No
4	Check Fuel Pump Relay for operation. 1) Check resistance between each two terminals of fuel pump relay. See Fig.3. **Between terminals "c" and "d" : Infinity** **Between terminals "a" and "b" : 56 – 146 Ω** 2) Check that there is continuity between terminals "c" and "d" when battery is connected to terminals "a" and "b". See Fig. 3. Is fuel pump relay in good condition?	"PNK" circuit open or poor C41-19 connection. If wire and connection are OK, substitute a known-good ECM and recheck.	Replace fuel pump relay.

Fig. 1 for Step 2

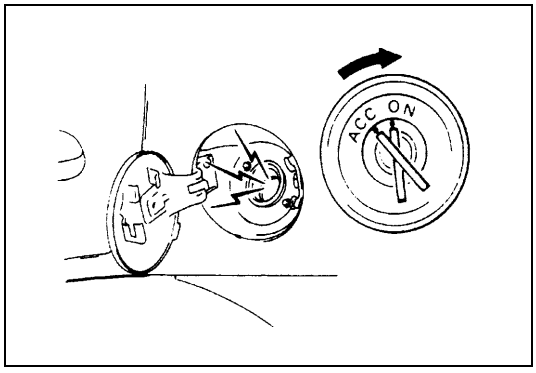

Fig. 2 for Step 3

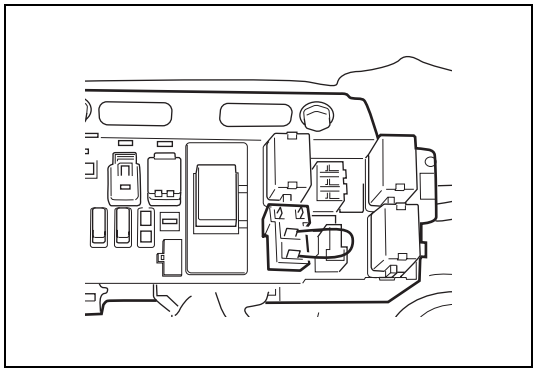

Fig. 3 for Step 4

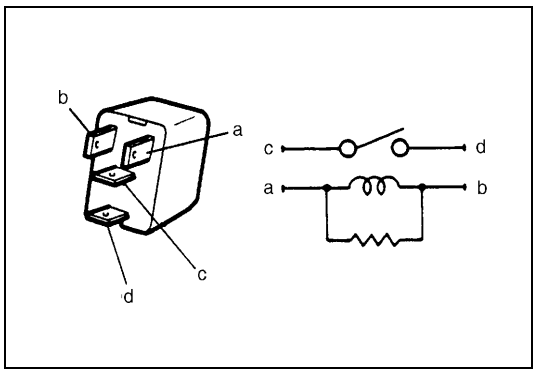

TABLE B-3 FUEL PRESSURE CHECK

WIRING DIAGRAM

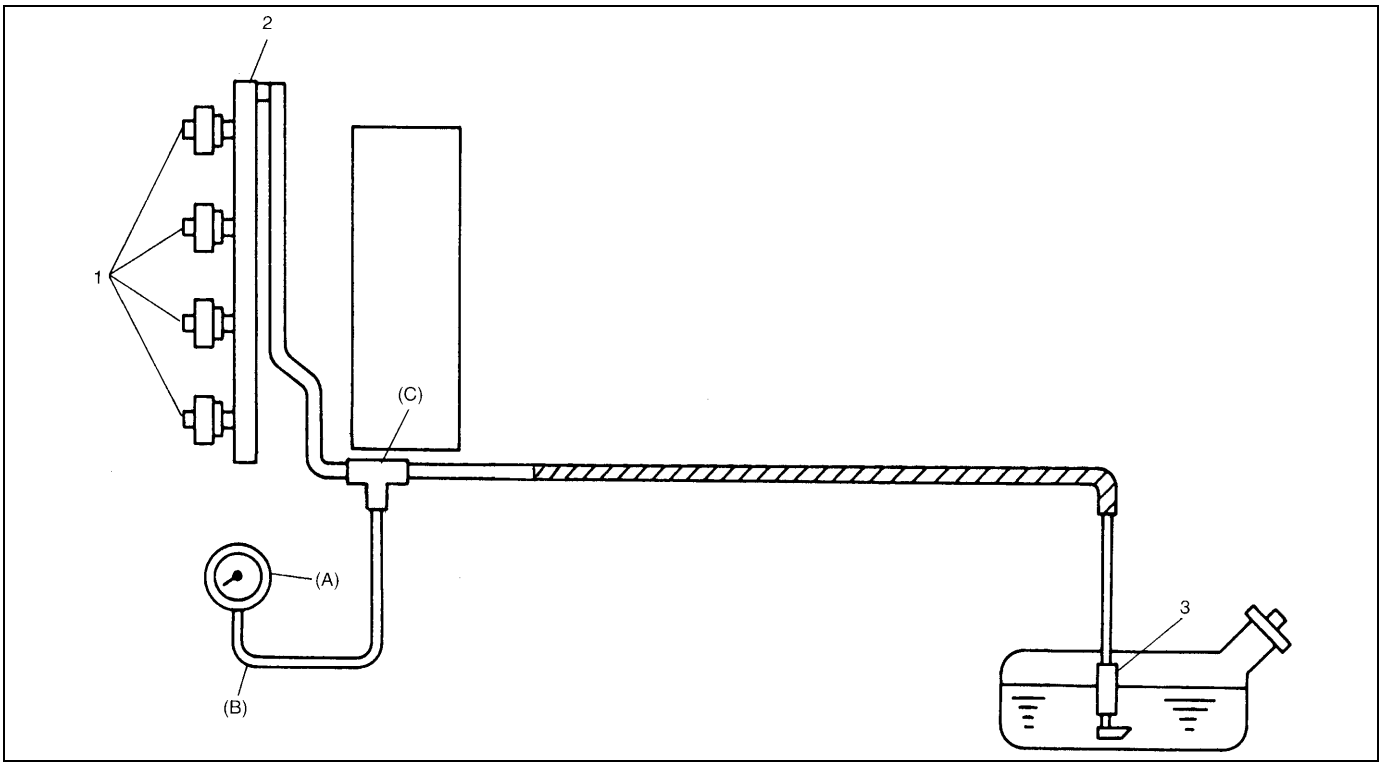

1. Injector	(A) : Fuel pressure gauge
2. Delivery pipe	(B) : Hose
3. Fuel pump	(C) : Attachment

INSPECTION

Step	Action	Yes	No
1	Check Fuel Pressure (Refer to Section 6E for details). 1) Release fuel pressure from fuel feed line. 2) Install fuel pressure gauge. 3) Check fuel pressure by repeating ignition switch ON and OFF. See Fig. 1. Is fuel pressure then 270 – 310 kPa (2.7 – 3.1 kg/cm^2, 38.4 – 44.0 psi)?	Go to Step 2.	Go to Step 4.
2	Is 250 kPa (2.5 kg/cm^2, 35.6 psi) or higher fuel pressure retained for 1 minute after fuel pump is stopped at Step 1?	Normal fuel pressure.	Go to Step 3.
3	Is there fuel leakage from fuel feed line hose, pipe or their joint?	Fuel leakage from hose, pipe or joint.	Faulty fuel pressure regulator.
4	Was fuel pressure higher than spec. in Step 1?	Faulty fuel pressure regulator.	Clogged fuel filter, Restricted fuel feed hose or pipe, Faulty fuel pump or Fuel leakage from hose connection in fuel tank.

Fig. 1 for Step 1

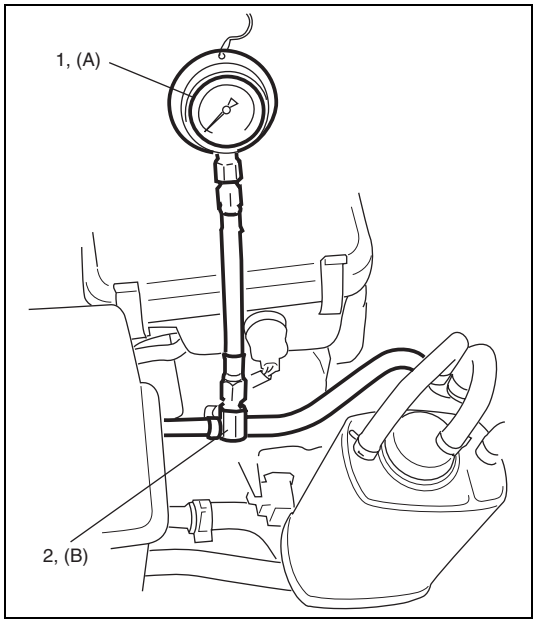

1. Fuel pressure gauge
2. 3 way joint

Special tool
(A) : 09912-58441
(B) : 09912-58490

TABLE B-4 IDLE AIR CONTROL SYSTEM CHECK

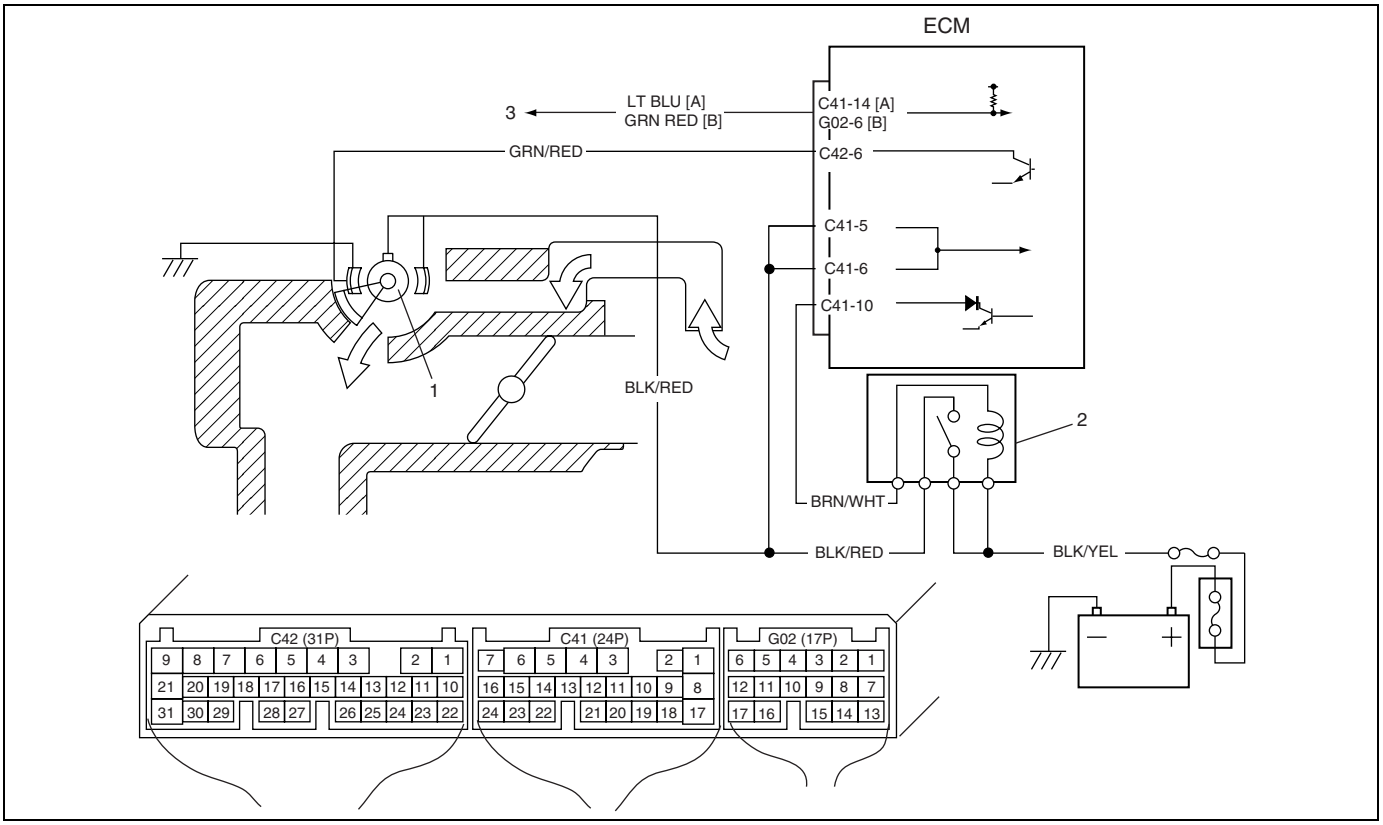

1. IAC valve	2. Main relay	3. To TCM
[A] : Case of TYPE A is shown (See NOTE)	[B] : Case of TYPE B is shown (See NOTE)	

NOTE:

For TYPE A and TYPE B, refer to NOTE in "ECM VOLTAGE VALUES TABLE" for applicable model.

INSPECTION

Step	Action	Yes	No
1	Check engine idle speed and IAC duty referring to "Idle Speed/IAC Duty Inspection" in Section 6E1. Is idle speed within specification?	Go to Step 2.	Go to Step 4.
2	Is IAC duty within specification in Step 1?	Go to Step 3.	Check for followings : Vacuum leak EVAP canister purge control system Clog of IAC air passage Accessory engine load Closed throttle position (TP sensor) Stuck of PCV valve
3	Is engine idle speed kept specified speed even with headlight ON?	System is in good condition.	Check IAC system for operation referring to Step 2 of DTC P0505 Diag. Flow Table.
4	Was idle speed higher than specification in Step 1?	Go to Step 5.	Go to Step 8.

Step	Action	Yes	No
5	Check A/C (input) signal circuit referring to Step 1 of Table B-5 A/C Signal Circuit Check, if equipped. (A/C signal can be also checked by using SUZUKI scan tool.) Is it in good condition?	Go to Step 6.	Repair or replace A/C signal circuit or A/C system.
6	Check IAC system referring to Step 2 of DTC P0505 Diag. Flow Table. Is check result satisfactory?	Go to Step 7.	Go to Step 3 of DTC P0505 Diag. Flow Table.
7	Was IAC duty less than about 3% (or more than about 97% for OFF duty meter) in Step 1 of this table?	Check abnormal air inhaling from air intake system, PCV valve and EVAP canister purge control system.	Check TP sensor (closed throttle position) and ECT sensor for performance. If sensors are OK, substitute a known-good ECM.
8	Is SUZUKI scan Tool available?	Go to Step 9.	Go to Step 10.
9	Check PNP signal (“D” range signal). 1) Connect SUZUKI scan tool to DLC with ignition switch OFF. 2) Turn ignition switch ON and check PNP signal (“P/N” and “D” range) on display when shifting selector lever to each range. See Table 1. Is check result satisfactory?	Go to Step 11.	Repair or replace.
10	Check PNP signal (“D” range signal). 1) Turn ignition switch ON. 2) Check voltage at terminal C41-14 (Case of TYPE A. See NOTE) or G02-6 (Case of TYOE B. See NOTE) of ECM connector connected. See Fig. 1 and Table 1. Is check result satisfactory?	Go to Step 11.	Repair or replace.
11	Check IAC system referring to Step 2 of DTC P0505 Diag. Flow Table. Is check result satisfactory?	Go to Step 10.	Go to Step 3 of DTC P0505 Diag. Flow Table.
12	Was IAC duty more than about 30% (or less than 70% for OFF duty meter) in Step 1 of this table?	Check parts or system which can cause engine low idle. Accessory engine load Clog of air passage Etc.	Substitute a known-good ECM and recheck.

Fig. 1 for Step 10

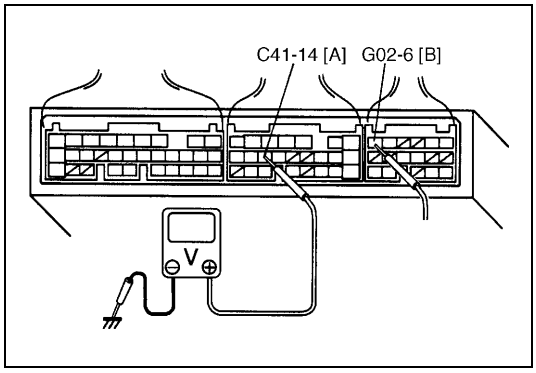

[A] : Case of TYPE A is shown (See NOTE)
[B] : Case of TYPE B is shown (See NOTE)

Table 1 for Step 9 and 10

		Scan tool or voltmeter	
		SUZUKI SCAN TOOL DISPLAY	VOLTAGE AT C41-14
Selector lever position	"P" and "N" range	P/N range	10 – 14V
	"R", "D", "2" and "L" range	D range	0 – 1V

TABLE B-5 A/C SIGNAL CIRCUITS CHECK (VEHICLE WITH A/C)

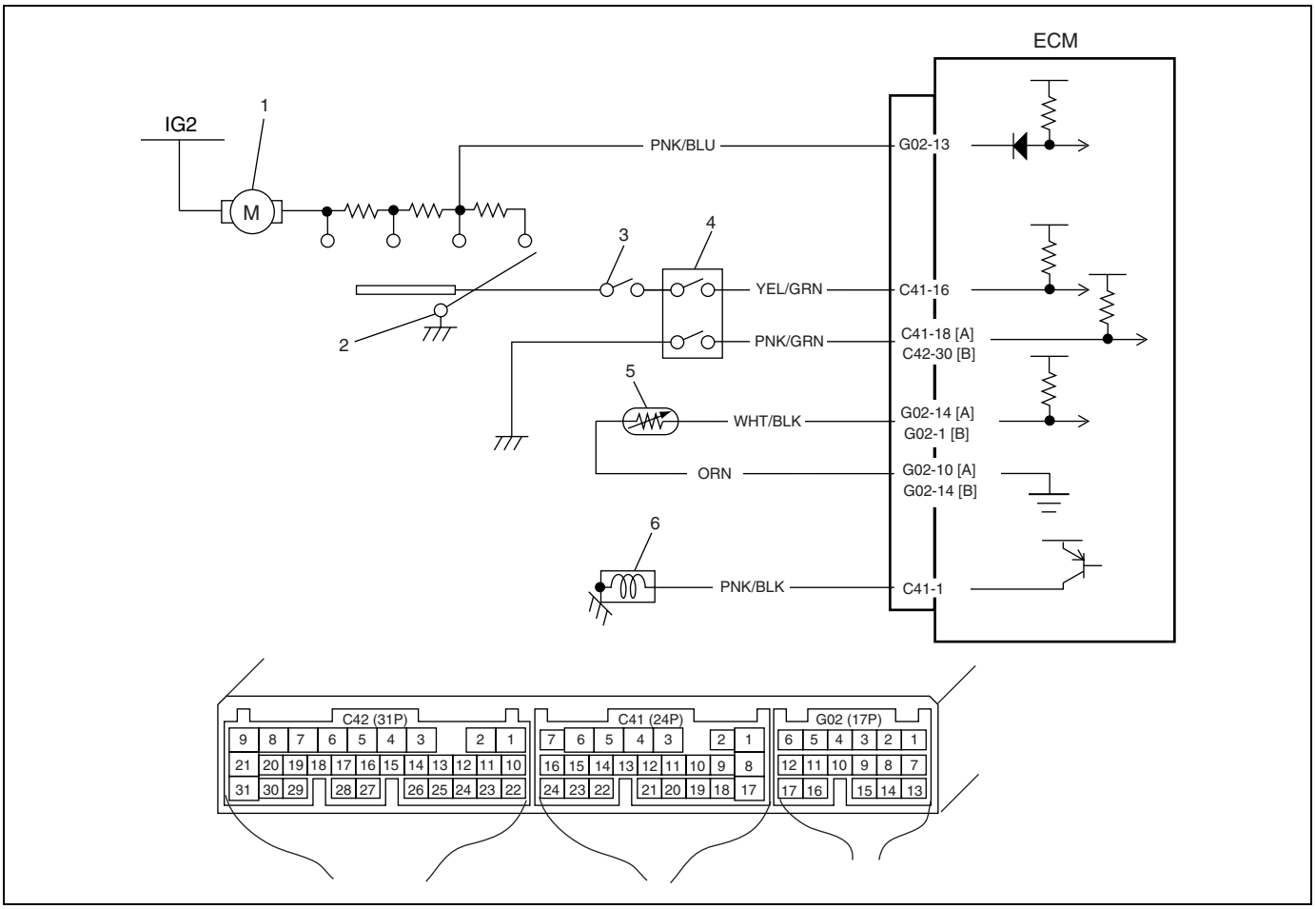

1. Blower fan motor	3. A/C switch	5. A/C evaporator temp. sensor
2. Blower fan switch	4. A/C pressure switch	6. A/C compressor clutch
[A] : Case of TYPE A is shown (See NOTE)	[B] : Case of TYPE B is shown (See NOTE)	

NOTE:

For TYPE A and TYPE B, refer to NOTE in "ECM VOLTAGE VALUES TABLE" for applicable model.

INSPECTION

Step	Action	Yes	No
1	Check evaporator temp. sensor resistance. 1) Disconnect ECM connectors with ignition switch at OFF position. 2) Check resistance between G02-14 terminal and G02-10 terminal (Case of TYPE A. See NOTE) or between G02-1 terminal and G02-14 terminal (Case of TYPE B. See NOTE). See Fig. 1. Is it within specification? **At 0°C 6.3 – 6.9 kΩ** **At 25°C 1.8 – 2.2 kΩ**	Go to Step 2.	Faulty A/C evaporator temp. sensor or its circuit.
2	Check A/C switch signal. 1) Check voltage at C41-16 terminal under each condition given below. **Ignition switch ON A/C switch OFF** **: 10 – 14V** **Ignition switch ON A/C switch ON** **: 0 – 1V** Is check result satisfactory?	Go to Step 3.	"YEL/GRN" wire open or short Poor C41-16 terminal connection If wire and connection are OK, substitute a known-good ECM and recheck. Go to Step 3.
3	1) Check voltage at C41-1 terminal under each condition given below. **While engine running, A/C switch OFF** **: 0 V** **While engine running, A/C switch ON** **: 10 – 14V** Is check result satisfactory?	A/C control system circuits are in good condition.	"PNK/BLK" wire open or short Poor C41-1 terminal connection If wire and connection are OK, substitute a known-good ECM and recheck.

NOTE:

When A/C evaporator thermistor temp. is below 2.5°C (36.5°F), A/C remain OFF (C41-1 terminal voltage become 0 – 1 V). This condition is not abnormal.

Fig. 1 for Step 1

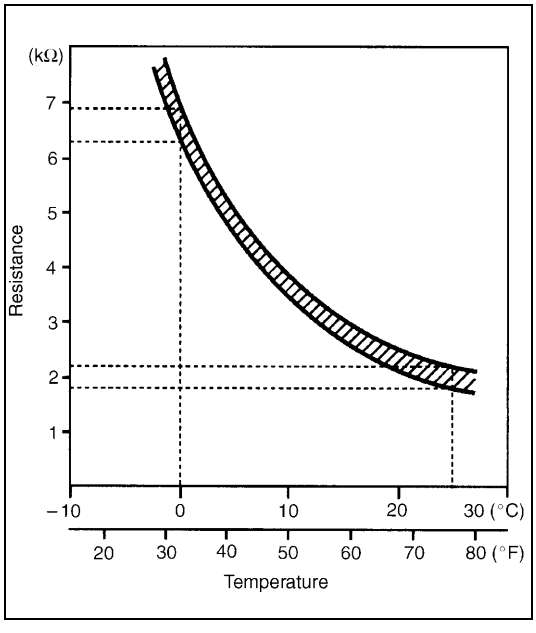

TABLE B-6 ELECTRIC LOAD SIGNAL CIRCUIT CHECK

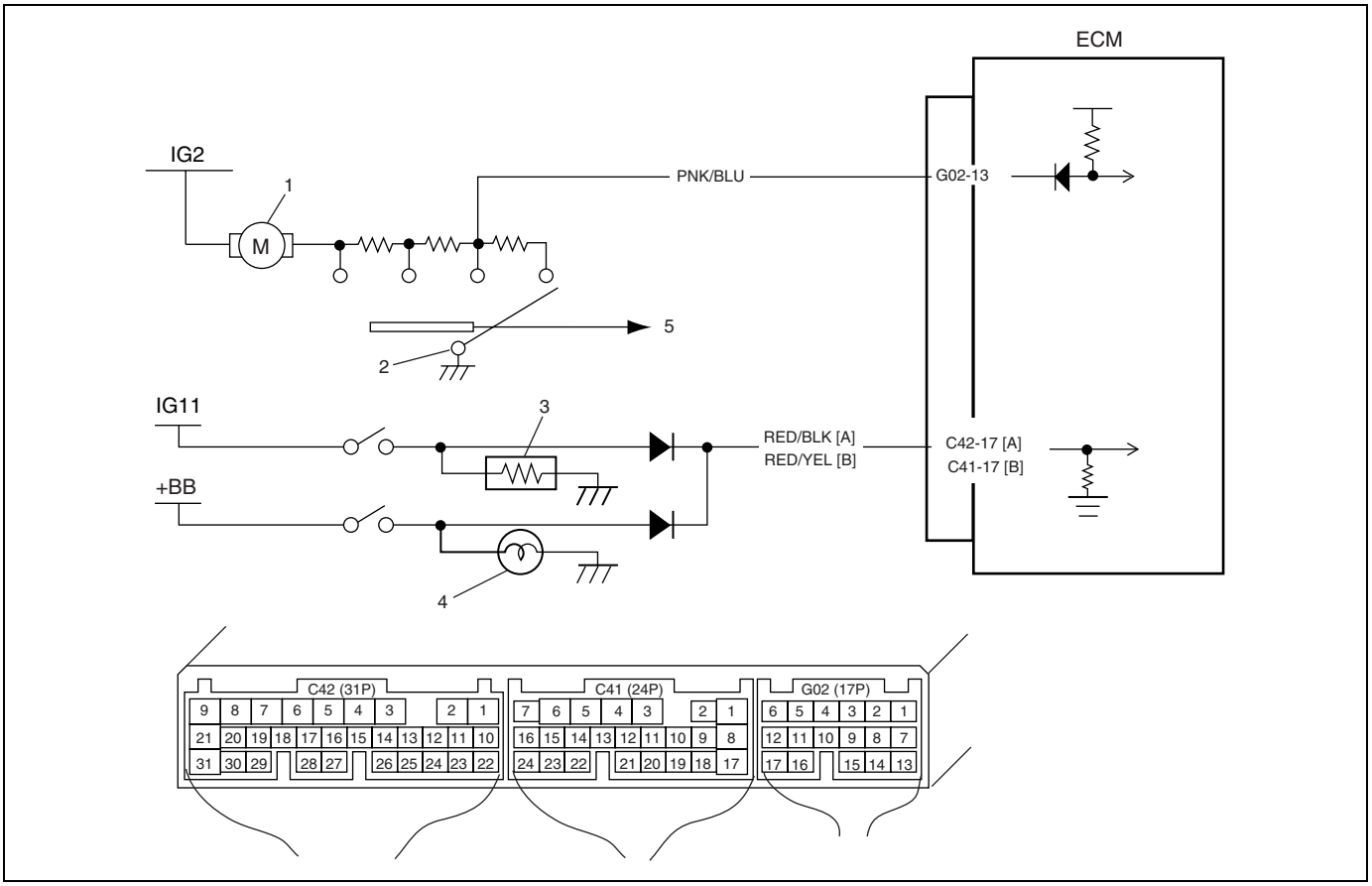

1. Blower fan motor	3. Rear defogger	5. To A/C switch
2. Blower fan switch	4. Position lamp	
[A] : Case of TYPE A is shown (See NOTE)	[B] : Case of TYPE B is shown (See NOTE)	

NOTE:

For TYPE A and TYPE B, refer to NOTE in "ECM VOLTAGE VALUES TABLE" for applicable model.

INSPECTION

Step	Action	Yes	No
1	Is SUZUKI scan tool available?	Go to Step 2.	Go to Step 3.
2	Check Electric Load Signal Circuit. 1) Connect SUZUKI scan tool to DLC with ignition switch OFF. 2) Start engine and select "DATA LIST" mode on scan tool. 3) Check electric load signal under following each condition. See Fig. 1 and Table 1. Is check result satisfactory?	Electric load signal circuit is in good condition.	"RED/BLK" (Case of TYPE A. See NOTE) or C41-17 (Case of TYPE B. See NOTE) and/or "PNK/BLU" circuit open or short, Electric load diodes malfunction or Each electric load circuit malfunction.
3	Check Electric Load Signal Circuit. 1) Turn ignition switch ON. 2) Check voltage at each terminals C42-17 (Case of TYPE A. See NOTE) or C41-17 (Case of TYPE B. See NOTE) and G02-13 of ECM connector connected, under above each condition. See Fig. 2 and Table 1. Is each voltage as specified?	Electric load signal circuit is in good condition.	"RED/BLK" (Case of TYPE A. See NOTE) or C41-17 (Case of TYPE B. See NOTE) and/or "PNK/BLU" circuit open or short, Electric load diodes malfunction or Each electric load circuit malfunction.

Fig. 1 for Step 2

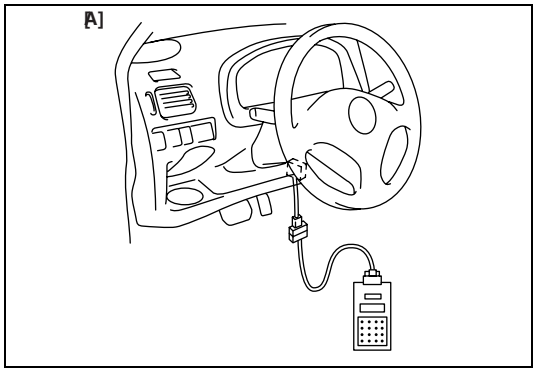

[A] : When using SUZUKI scan tool:

Fig. 2 for Step 3

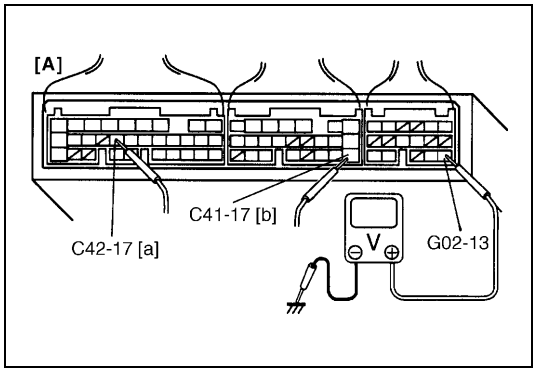

[A] : When not using SUZUKI scan tool:
[a] : Case of TYPE A is shown (See NOTE)
[b] : Case of TYPE B is shown (See NOTE)

Table 1 for Step 2 and 3

		Scan tool or voltmeter		
		SUZUKI SCAN TOOL	VOLTAGE AT C42-17	VOLTAGE AT G02-13
Ignition switch ON, Small light, heater blower fan and rear defogger all turned	OFF	OFF	0V	10 – 14V
	ON	ON	10 – 14V	0V

TABLE B-7 RADIATOR FAN CONTROL SYSTEM CHECK

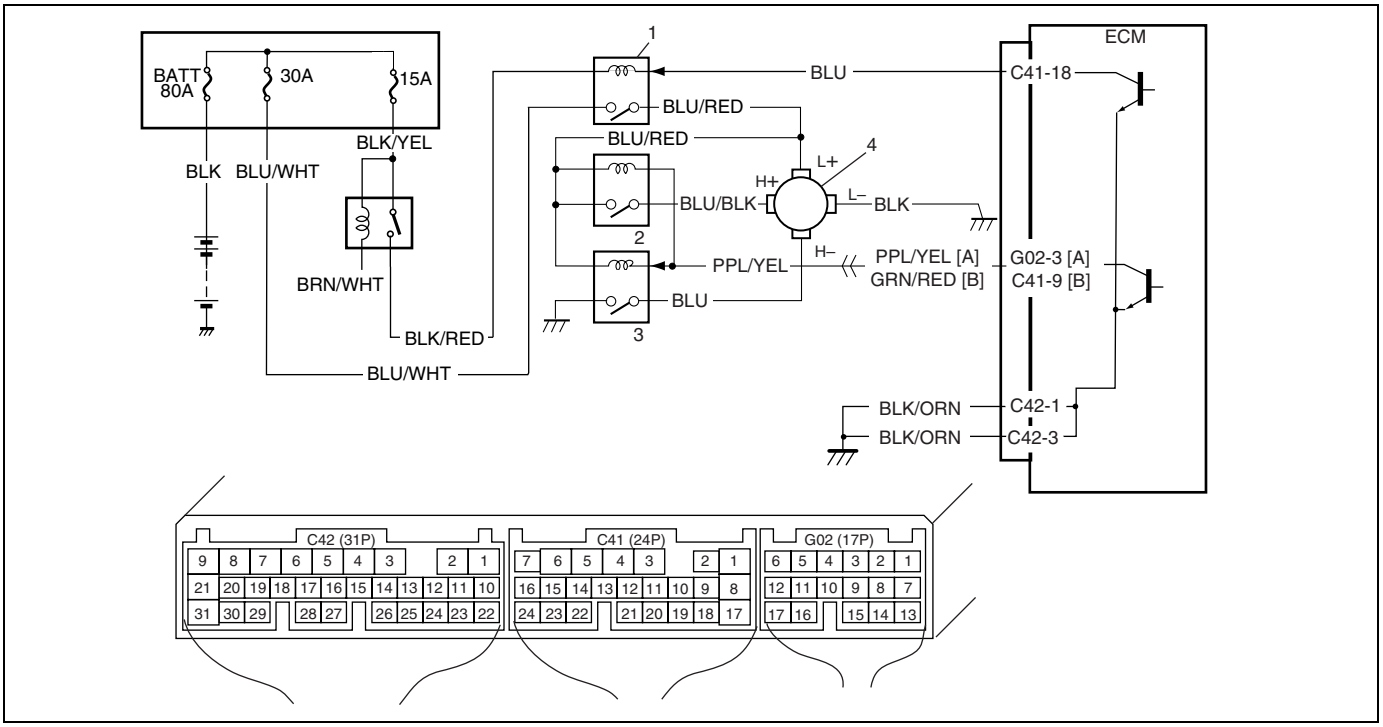

1. Radiator fan relay No.1	3. Radiator fan relay No.3	[A] : Case of TYPE A is shown (See NOTE)
2. Radiator fan relay No.2	4. Radiator fan	[B] : Case of TYPE B is shown (See NOTE)

NOTE:

For TYPE A and TYPE B, refer to NOTE in "ECM VOLTAGE VALUES TABLE" for applicable model.

INSPECTION

Step	Action	Yes	No
1	Check Fan Control System. 1) Connect scan tool to DLC with ignition switch OFF. 2) Start engine and select "DATA LIST" mode on scan tool. 3) Warm up engine until coolant temp. is 97.5°C, 208°F or higher and A/C switch turn OFF. (If engine coolant temp. does not rise, check engine cooling system or ECT sensor.) See Fig. 1. Is radiator cooling fan started when engine coolant temp. reached above temp.?	Radiator cooling fan control system is in good condition.	Go to Step 2.
2	Check Radiator Fan Relay and Its Circuit. 1) Check DTC and pending DTC with scan tool. Is DTC P0480 displayed?	Go to DTC P0480 Diag. Flow Table.	Go to Step 3.
3	Check Radiator Fan Relays. 1) Turn ignition switch OFF and remove radiator cooling fan relays. (No.1 – No.3) 2) Check for proper connection to relay at terminals "c" and "d". 3) If OK, check that there is continuity between "c" and "d" when battery is connected to terminals "a" and "b". See Fig. 2. Is check result satisfactory?	Go to Step 4.	Replace radiator fan relay(s).

Step	Action	Yes	No
4	Check Radiator Fan. 1) Turn ignition switch OFF. 2) Disconnect cooling fan motor connector. 3) Check for proper connection to motor at “BLU/RED” and “BLK” terminals. 4) If OK, connect battery to motor and check for operation. See Fig. 3. Is it in good condition?	“BLU/WHT”, “BLU/RED” or “BLK” circuit open.	Replace radiator fan motor.

Fig. 1 for Step 1

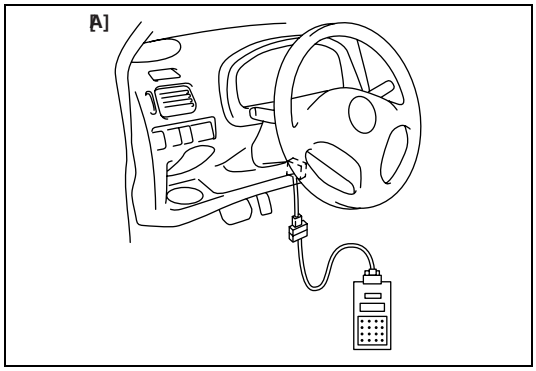

[A] : When using SUZUKI scan tool:

Fig. 2 for Step 3

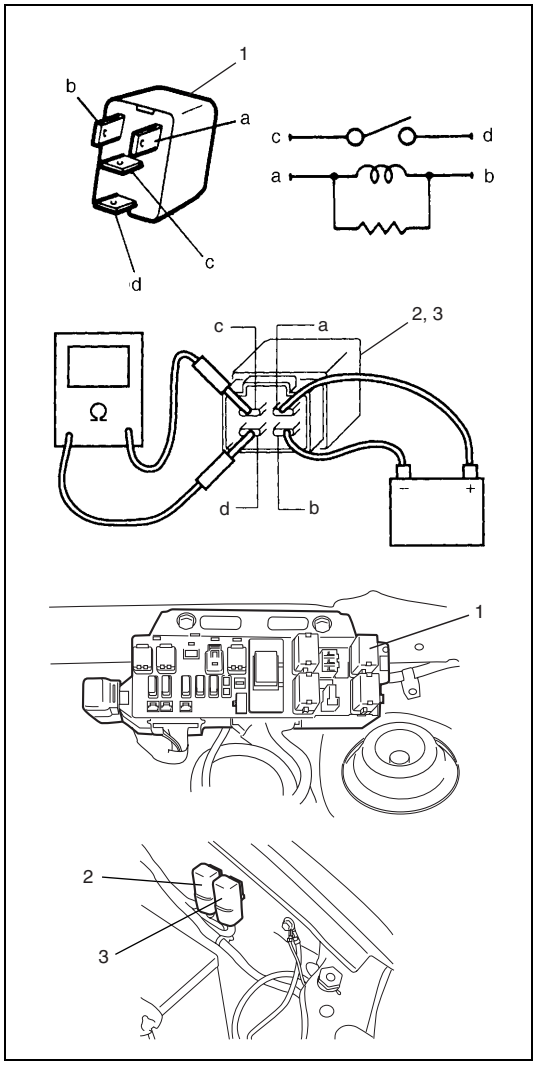

1.	Radiator fan No.1
2.	Radiator fan No.2
3.	Radiator fan No.3

Fig. 3 for Step 4

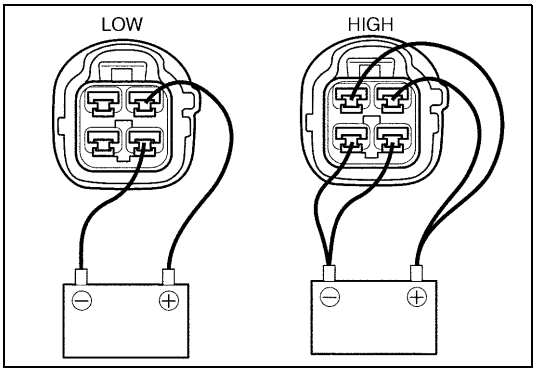

SPECIAL TOOL

	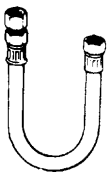	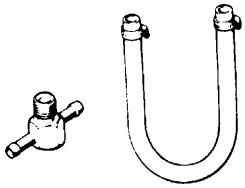	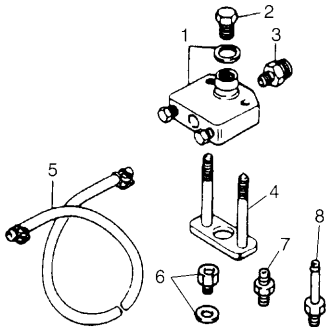
09912-58441 Pressure gauge	09912-58431 Pressure hose	09912-58490 3-way joint & hose	09912-58421 Checking tool set (See NOTE “A”.)
	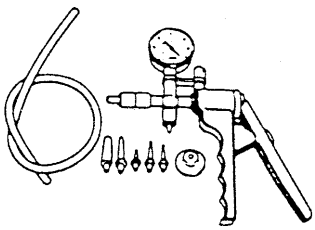	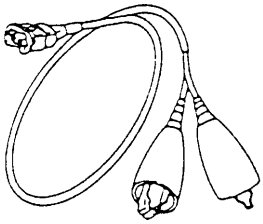	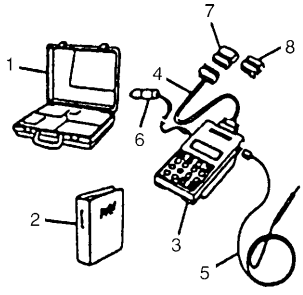
09912-57610 Checking tool plate	09917-47010 Vacuum pump gauge	09930-88530 Injector test lead	09931-76011 Tech 1 A kit (See NOTE “B”.)

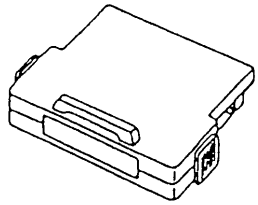	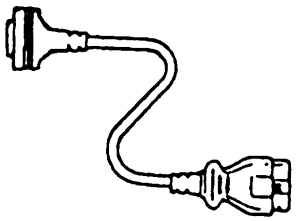
Mass storage cartridge	09931-76030 16/14 pin DLC cable

NOTE:

- **"A" : This kit includes the following items.**
  1. Tool body & washer, 2. Body plug, 3. Body attachment, 4. Holder, 5. Return hose & clamp, 6. Body attachment-2 & washer, 7. Hose attachment-1, 8. Hose attachment-2
- **"B" : This kit includes the following items.**
  1. Storage case, 2. Operator's manual, 3. Tech 1A, 4. DLC cable, 5. Test lead/probe, 6. Power source cable, 7. DLC cable adaptor, 8. Self–test adaptor

SECTION 6A1

ENGINE MECHANICAL (M13 ENGINE)

WARNING:

For vehicles equipped with Supplemental Restraint (Air Bag) System :

- **Service on and around the air bag system components or wiring must be performed only by an authorized SUZUKI dealer. Refer to "Air Bag System Components and Wiring Location View" under "General Description" in air bag system section in order to confirm whether you are performing service on or near the air bag system components or wiring. Please observe all WARNINGS and "Service Precautions" under "On-Vehicle Service" in air bag system section before performing service on or around the air bag system components or wiring. Failure to follow WARNINGS could result in unintentional activation of the system or could render the system inoperative. Either of these two conditions may result in severe injury.**
- **Technical service work must be started at least 90 seconds after the ignition switch is turned to the "LOCK" position and the negative cable is disconnected from the battery. Otherwise, the system may be activated by reserve energy in the Sensing and Diagnostic Module (SDM).**

CONTENTS

GENERAL DESCRIPTION 6A1-2
ENGINE 6A1-2
ENGINE LUBRICATION 6A1-3
DIAGNOSIS 6A1-4
DIAGNOSIS TABLE 6A1-4
COMPRESSION CHECK 6A1-4
ENGINE VACUUM CHECK 6A1-6
OIL PRESSURE CHECK 6A1-7
VALVE LASH (CLEARANCE) 6A1-9
ON-VEHICLE SERVICE 6A1-12
AIR CLEANER ELEMENT 6A1-12
AIR CLEANER ASSEMBLY AND RESONATOR 6A1-13
KNOCK SENSOR 6A1-13
CYLINDER HEAD COVER 6A1-13
THROTTLE BODY AND INTAKE MANIFOLD 6A1-16
EXHAUST MANIFOLD 6A1-19
OIL PAN AND OIL PUMP STRAINER 6A1-21
TIMING CHAIN COVER 6A1-25
OIL PUMP 6A1-30
TIMING CHAIN AND CHAIN TENSIONER 6A1-34
CAMSHAFT, TAPPET AND SHIM 6A1-39
VALVES AND CYLINDER HEAD 6A1-44
PISTONS, PISTON RINGS, CONNECTING RODS AND CYLINDERS 6A1-57
ENGINE MOUNTINGS 6A1-67
UNIT REPAIR OVERHAUL 6A1-68
ENGINE ASSEMBLY 6A1-68
MAIN BEARINGS, CRANKSHAFT AND CYLINDER BLOCK 6A1-73
REQUIRED SERVICE MATERIAL 6A1-85
TIGHTENING TORQUE SPECIFICATION 6A1-86
SPECIAL TOOL 6A1-87

GENERAL DESCRIPTION

ENGINE

The engine is water-cooled, in line 4 cylinders, 4 stroke cycle gasoline unit with its DOHC (Double overhead camshaft) valve mechanism arranged for “V” type valve configuration and 16 valves (4 valves/one cylinder). The double overhead camshaft is mounted over the cylinder head; it is driven from crankshaft through timing chain, and no push rods are provided in the valve train system.

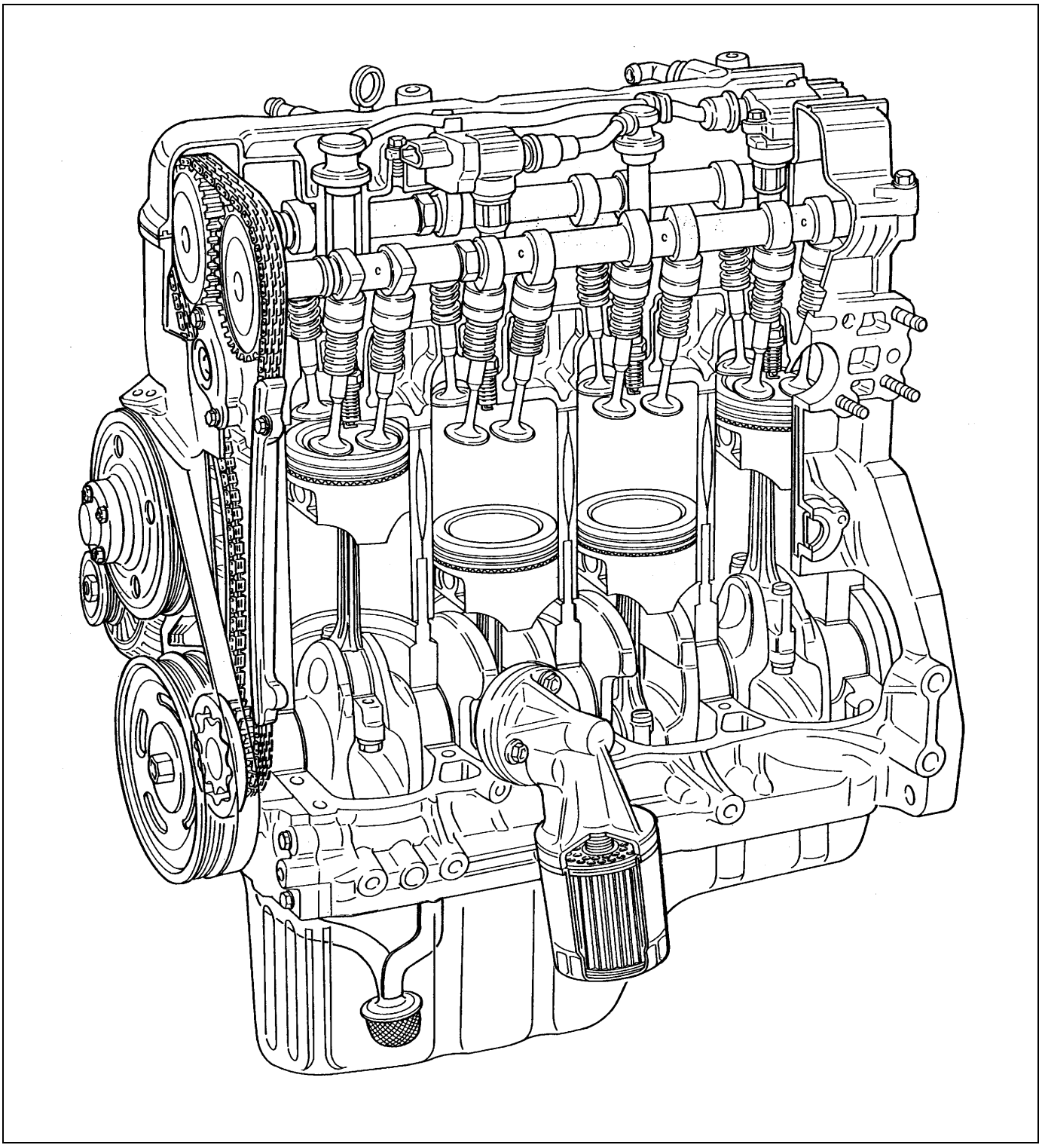

ENGINE LUBRICATION

The oil pump is of a trochoid type, and mounted on the crankshaft. Oil is drawn up through the oil pump strainer and passed through the pump to the oil filter.
The filtered oil flows into 2 paths in cylinder block.
In one path, oil reaches the crankshaft journal bearings. Oil from the crankshaft journal bearings is supplied to the connecting rod bearings by means of intersecting passages drilled in the crankshaft, and then injected from the big end of connecting rod to lubricate piston, rings, and cylinder wall.
In other path oil goes up to the cylinder head and lubricates valves and camshafts, etc., after passing through the internal oilway of camshafts.

An oil relief valve is provided on the oil pump. This valve starts relieving oil pressure when the pressure exceeds about 400 kPa (4.0 kg/cm^2, 56.9 psi).

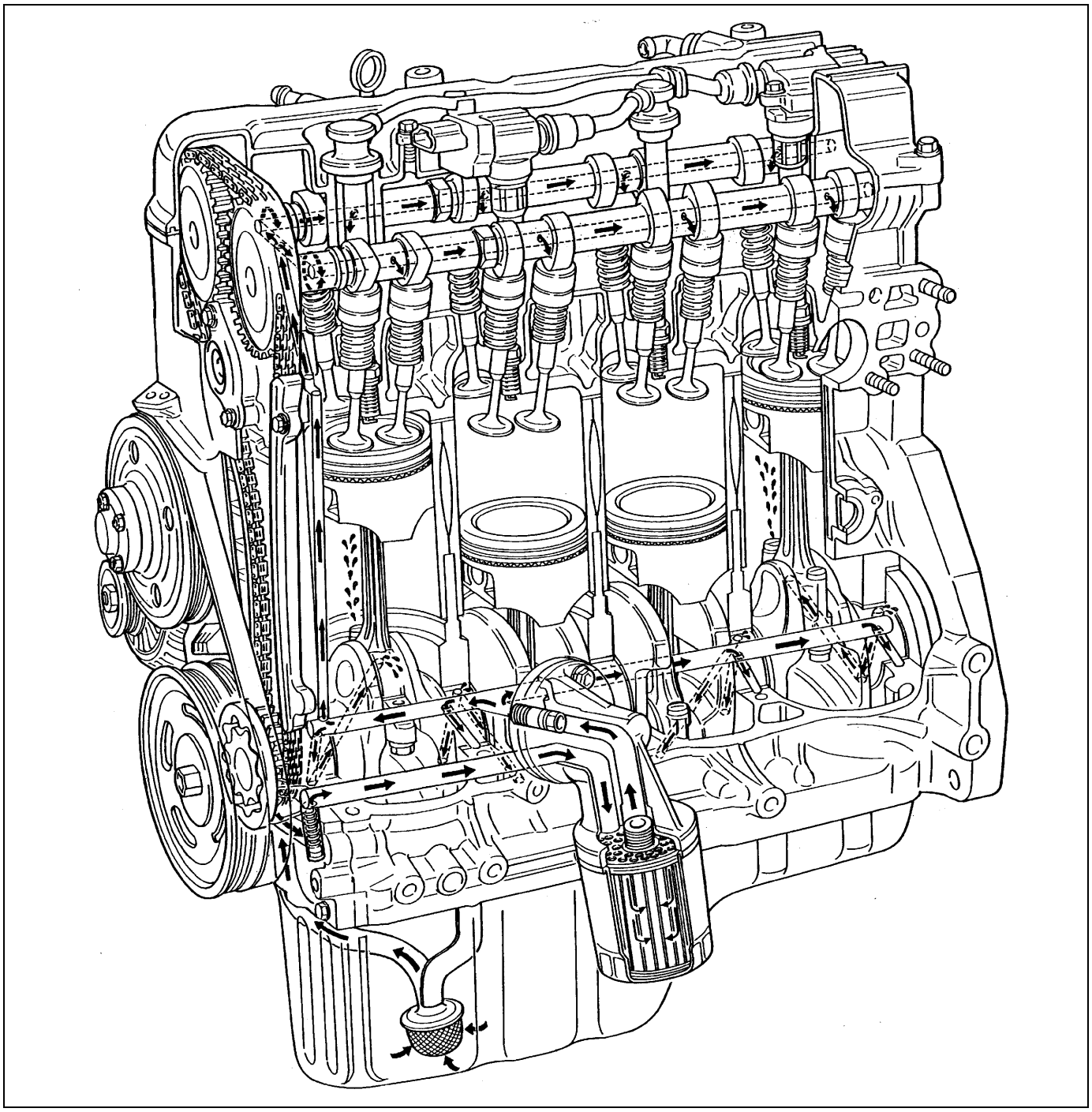

DIAGNOSIS

DIAGNOSIS TABLE

Refer to “ENGINE MECHANICAL DIAGNOSIS TABLE” in Section 6.

COMPRESSION CHECK

Check compression pressure on all 4 cylinders as follows:

1) Warm up engine to normal operating temperature.
2) Stop engine after warming up.

NOTE:

After warming up engine, place transmission gear shift lever in “Neutral” (shift selector lever to “P” range for A/T model), and set parking brake and block drive wheels.

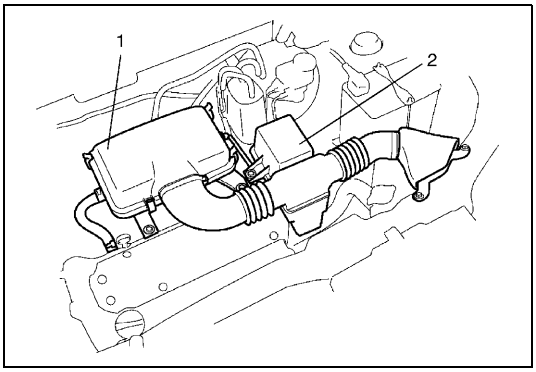

3) Remove air cleaner assembly (1), resonator (2) and hoses. Refer to “AIR CLEANER ASSEMBLY AND RESONATOR”.

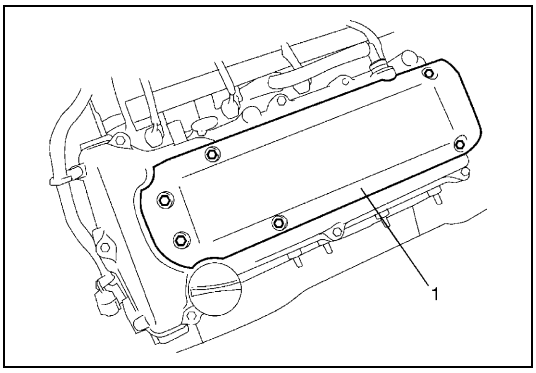

4) Remove cylinder head upper cover (1).

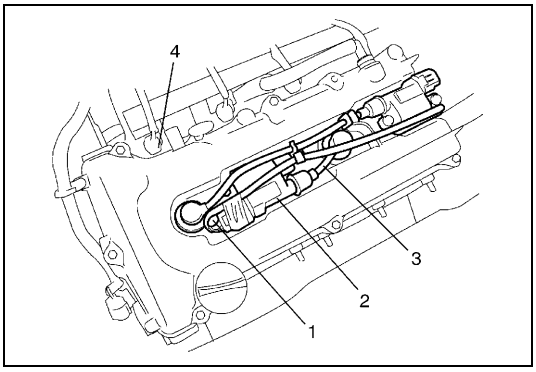

5) Disconnect ignition coil couplers (1).
6) Remove ignition coil assemblies (2) with high-tension cord (3).
7) Remove all spark plugs.
8) Disconnect fuel injector wires (4) at the coupler.

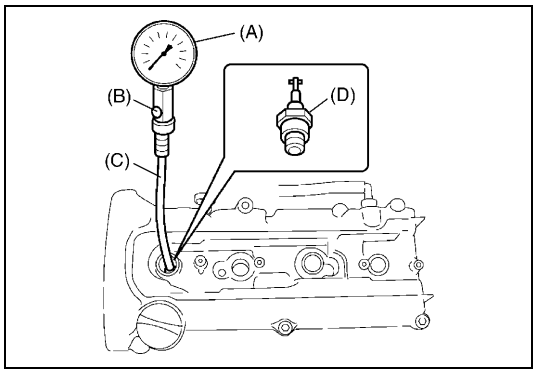

9) Install special tools (compression gauge) into spark plug hole.

Special tool
(A) : 09915-64510-001
(B) : 09915-64510-002
(C) : 09915-64530
(D) : 09915-67010

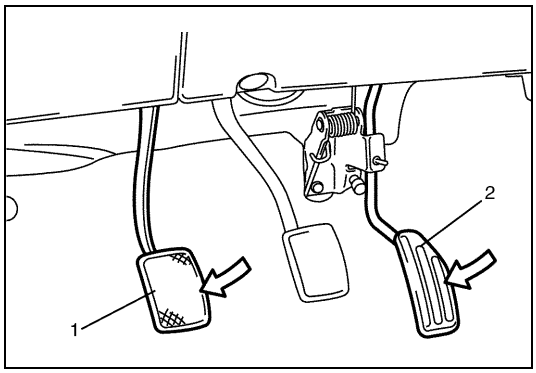

10) Disengage clutch (1) (to lighten starting load on engine) for M/T vehicle, and depress accelerator pedal (2) all the way to make throttle fully open.

11) Crank engine with fully charged battery, and read the highest pressure on compression gauge.

NOTE:

- **For measuring compression pressure, crank engine at least 250 rpm by using fully charged battery.**
- **If measured compression pressure is lower than limit value, check installation condition of special tool. If it is properly installed, possibility is compression pressure leakage from where piston ring and valve contact.**

Compression pressure

Standard	**1400 kPa (14.0 kg/cm^2, 199.0 psi)**
Limit	**1100 kPa (11.0 kg/cm^2, 156.0 psi)**
Max. difference between any two cylinders	**100 kPa (1.0 kg/cm^2, 14.2 psi)**

12) Carry out Steps 9) through 11) on each cylinder to obtain 4 readings.

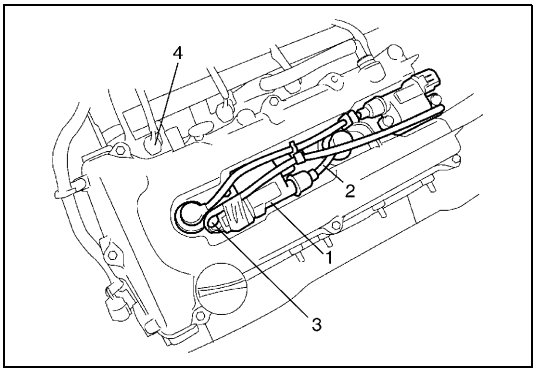

13) After checking, install spark plugs and ignition coil assemblies (1) with high-tension cord (2).
14) Connect ignition coil couplers (3).
15) Connect fuel injector wires(4) at the coupler.

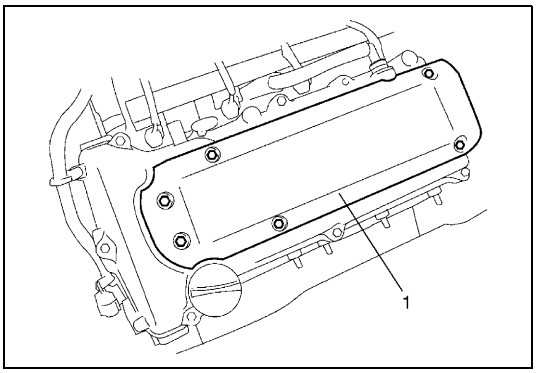

16) Check cylinder head upper cover gasket for deterioration and then install it into groove of cylinder head upper cover (1) securely.

17) Install cylinder head upper cover with gasket on to cylinder head cover.
18) Install air cleaner assembly, resonator and hoses referring to “AIR CLEANER ASSEMBLY AND RESONATOR”.

ENGINE VACUUM CHECK

The engine vacuum that develops in the intake line is a good indicator of the condition of the engine. The vacuum checking procedure is as follows :

1) Warm up engine to normal operating temperature.

NOTE:

After warming up engine, be sure to place transmission gear shift lever in “Neutral” (shift selector lever to “P” range for A/T model), and set parking brake and block drive wheels.

2) Stop engine and turn off the all electric switches.

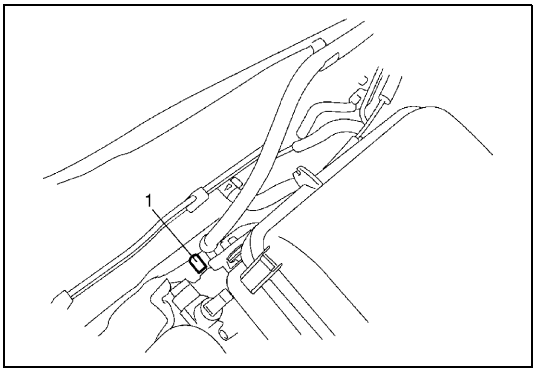

3) Remove cap (1) from intake manifold.

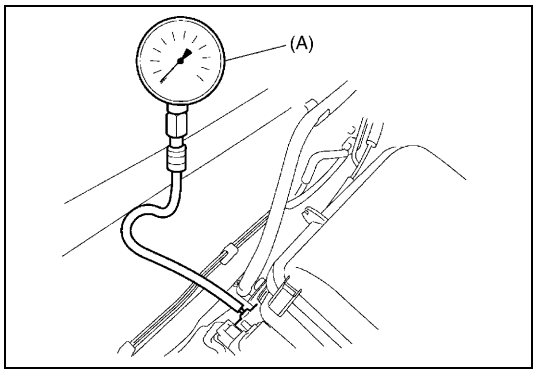

4) Connect special tool (Vacuum gauge) to intake manifold.

Special tool
(A) : 09915-67310

5) Run engine at specified idle speed and read vacuum gauge. Vacuum should be within specification.

Vacuum specification (at sea level)
: 59 – 73 kPa (45 – 55 cmHg, 17.7 – 21.6 inHg)
at specified idle speed

6) After checking, disconnect special tool (Vacuum gauge) from intake manifold.
7) Install cap to intake manifold.

OIL PRESSURE CHECK

NOTE:
Prior to checking oil pressure, check the following items.

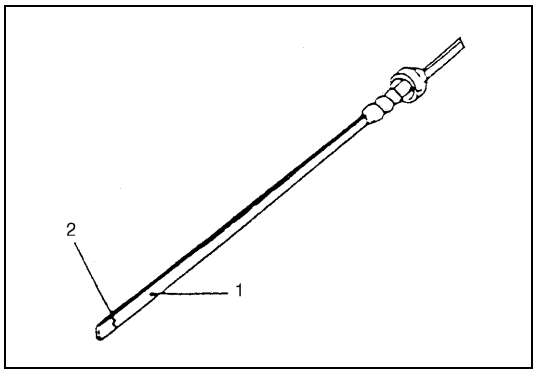

- Oil level in oil pan
  If oil level is low, add oil up to Full level mark (hole) on oil level gauge.

1. Full level mark (hole)
2. Low level mark (hole)

- Oil quality
  If oil is discolored, or deteriorated, change it.
  For particular oil to be used referring to the table in Section 0B.
- Oil leaks
  If leak is found, repair it.

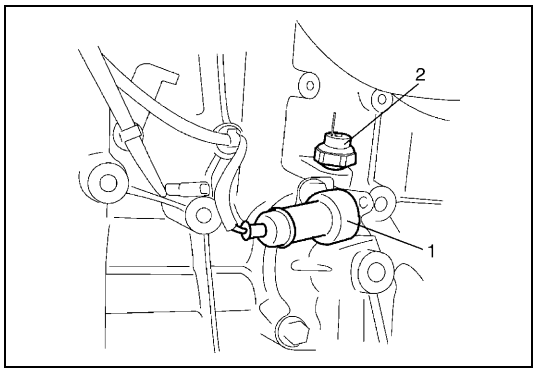

1) Disconnect oil pressure switch coupler (1) and remove oil pressure switch (2) from cylinder block.

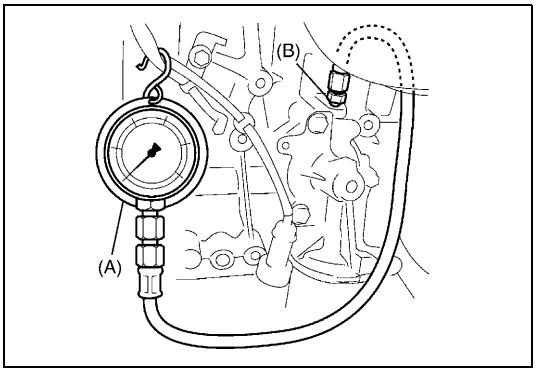

2) Install special tools (Oil pressure gauge) to vacated threaded hole.

Special tool
(A) : 09915-77310
(B) : 09915-78211

3) Start engine and warm it up to normal operating temperature.

NOTE:

Be sure to place transmission gear shift lever in "Neutral" (shift selector lever to "P" range for A/T model), and set parking brake and block drive wheels.

4) After warming up, raise engine speed to 4,000 rpm and measure oil pressure.

Oil pressure specification
: 280 – 430 kPa (2.8 – 4.3 kg/cm^2, 39.8 – 61.1 psi)
at 4,000 rpm

5) Stop engine and remove oil pressure gauge and attachment.

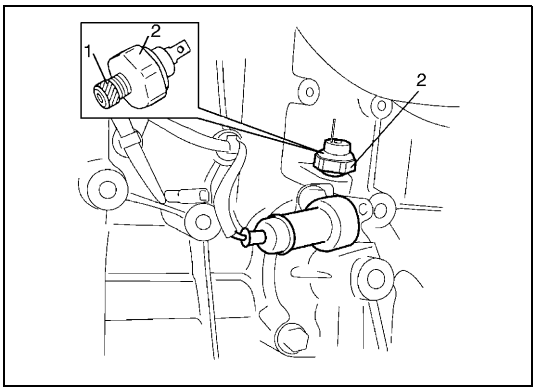

6) Before reinstalling oil pressure switch (2), be sure to wrap its screw threads with sealing tape (1) and tighten switch to specified torque.

NOTE:

If sealing tape edge is bulged out from screw threads of switch, cut it off.

Tightening torque
Oil pressure switch (a) : 14 N·m (1.4 kg-m, 10.5 lb-ft)

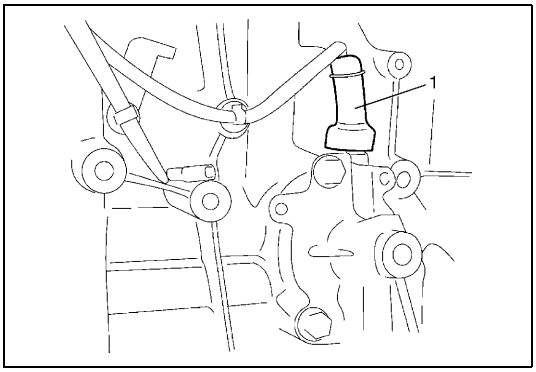

7) Start engine and check oil pressure switch for oil leakage. If oil leakage is found, repair it.
8) Connect oil pressure switch coupler (1).

VALVE LASH (CLEARANCE)

INSPECTION

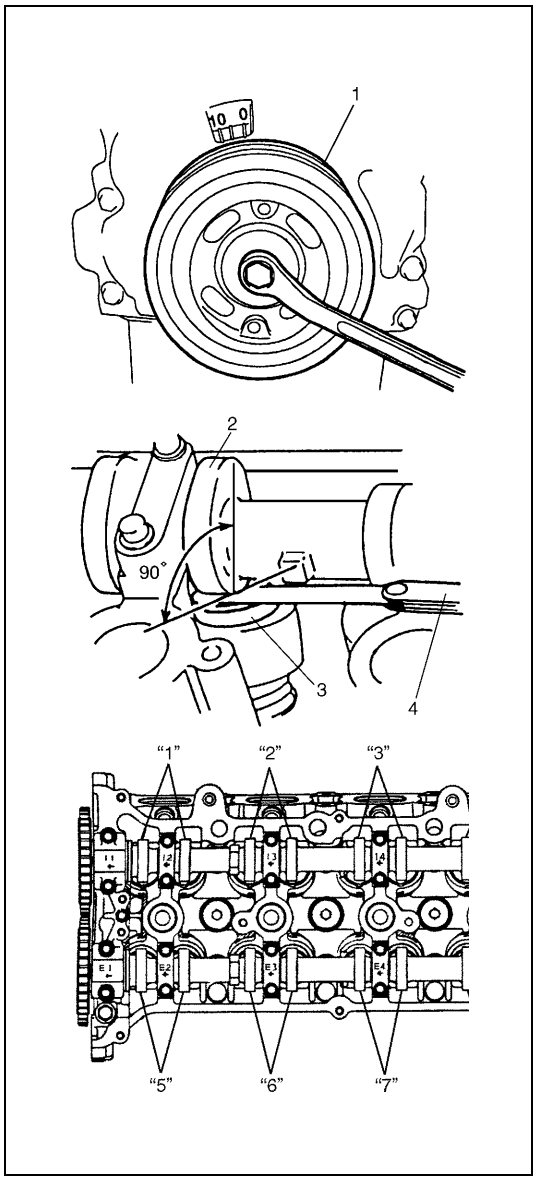

1) Remove negative cable at battery.
2) Remove cylinder head cover referring to "CYLINDER HEAD COVER".
3) Remove right side engine cover if necessary.
4) Using 17 mm wrench, turn crankshaft pulley (1) clockwise until cam lobes (2) become perpendicular to shim faces (3) at valves "1" and "7" as shown in figure.
5) Check valve lashes with thickness gauge (4) according to the following procedure.
   a) Check valve lashes at valves "1" and "7".
   b) Turn camshafts by 90° (by turning crankshaft with wrench).
   c) Make sure that cam lobes are perpendicular to shim faces at valves to be checked (in this case, "3" and "8"), if not, adjust it by turning crankshaft. Check valve lashes.
   d) In the same manner as b) – c), check valve lashes at valves "4" and "6".
   e) In the same manner as b) – c) again, check valve lashes at valves "2" and "5".

Valve clearance specification

	When cold (Coolant temperature is 15 – 25°C (59 – 77°F))	**When hot (Coolant temperature is 60 – 68°C (140 – 154°F))**
Intake	**0.18 – 0.22 mm (0.007 – 0.009 in.)**	**0.21 – 0.27 mm (0.008 – 0.011 in.)**
Exhaust	**0.28 – 0.32 mm (0.011 – 0.013 in.)**	**0.30 – 0.36 mm (0.012 – 0.014 in.)**

If valve lash is out of specification, record valve lash and adjust it to specification by replacing shim.

REPLACEMENT OF SHIM

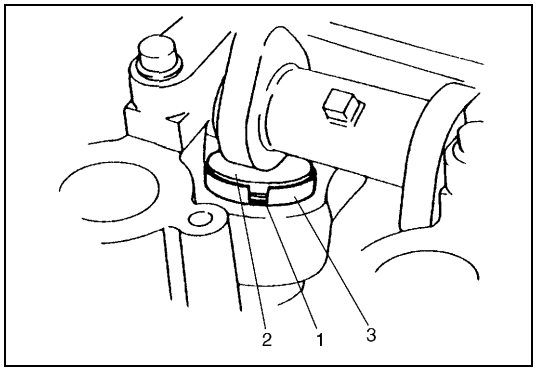

1) Close the valve whose shim (2) is to be replaced by turning crankshaft, then turn tappet (3) till its cut section (1) faces inside as shown in figure.
2) Lift down the it valve by turning crankshaft to 180°.
3) Hold tappet at that position using special tool as follows.
   a) Remove its housing bolts.

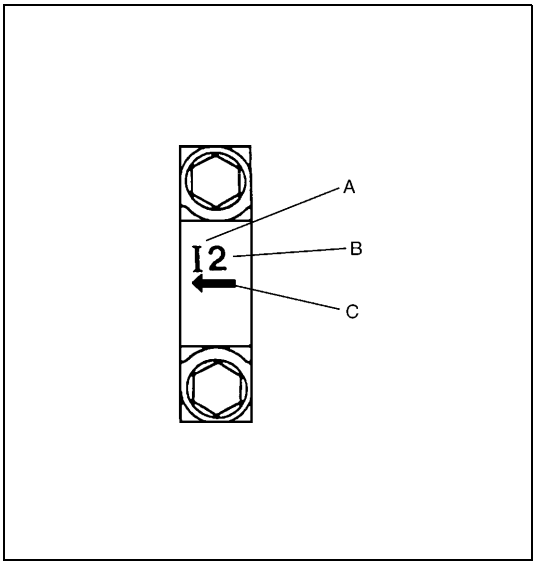

b) Check housing No. and select special tool corresponding to housing No., referring to “special tool selection table”.

Special tool selection table

No. on camshaft housing	Embossed mark on special tool
I2	IN2
I3, I4, I5	IN345
E2	EX2
E3, E4, E5	EX345

A: I : Intake side or E : Exhaust side
B: Position from timing chain side
C: Pointing to timing chain side

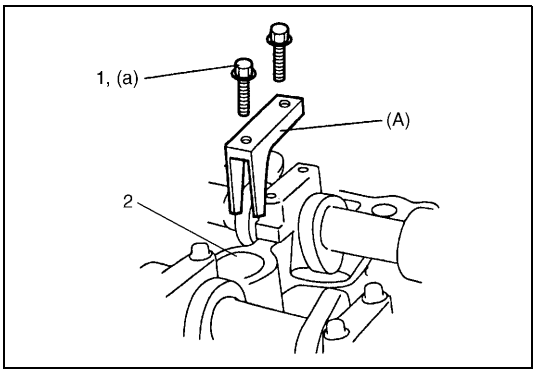

c) Hold down the tappet so as not to hang to the shim with special tool by installing it on camshaft housing with housing bolt (1) to specified torque.

Special tool
(A) : 09916-67020

Tightening torque
Camshaft housing bolts (for tightening of special tool)
(a) : 8 N·m (0.8 kg-m, 6.0 lb-ft)

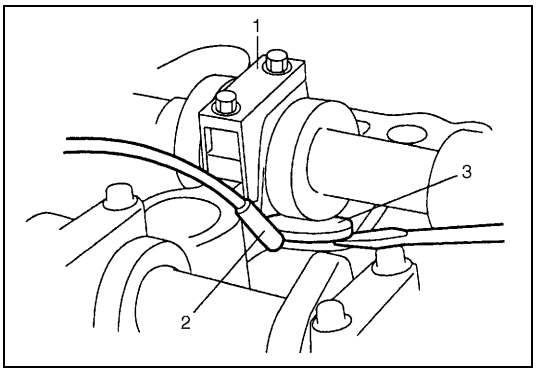

4) Turn camshaft by approximately 90° clockwise and remove shim (3).

WARNING:
Never put in the hand between cam shaft and tappet.

1. Special tool
2. Magnet

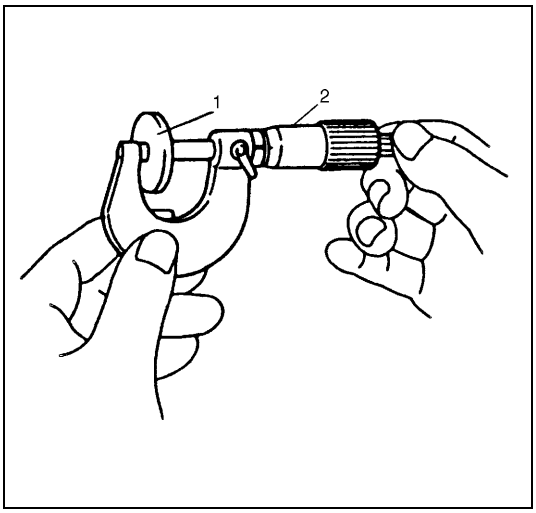

5) Using a micrometer (2), measure the thickness of the removed shim (1), and determine replacement shim by calculating the thickness of new shim with the following formula and table.

Intake side:
A = B + (C – 0.20 mm (0.008 in.))
Exhaust side:
A = B + (C – 0.30 mm (0.012 in.))

A : Thickness of new shim
B : Thickness of removed shim
C : Measured valve clearance

For example of intake side :
When thickness of removed shim is 2.40 mm (0.095 in.), and measured valve clearance is 0.45 mm (0.018 in.).
A = 2.40 mm (0.094 in.) + (0.45 mm (0.018 in.) – 0.20 mm (0.008 in.)) = 2.65 mm (0.104 in.)
Calculated thickness of new shim = 2.65 mm (0.104 in.)

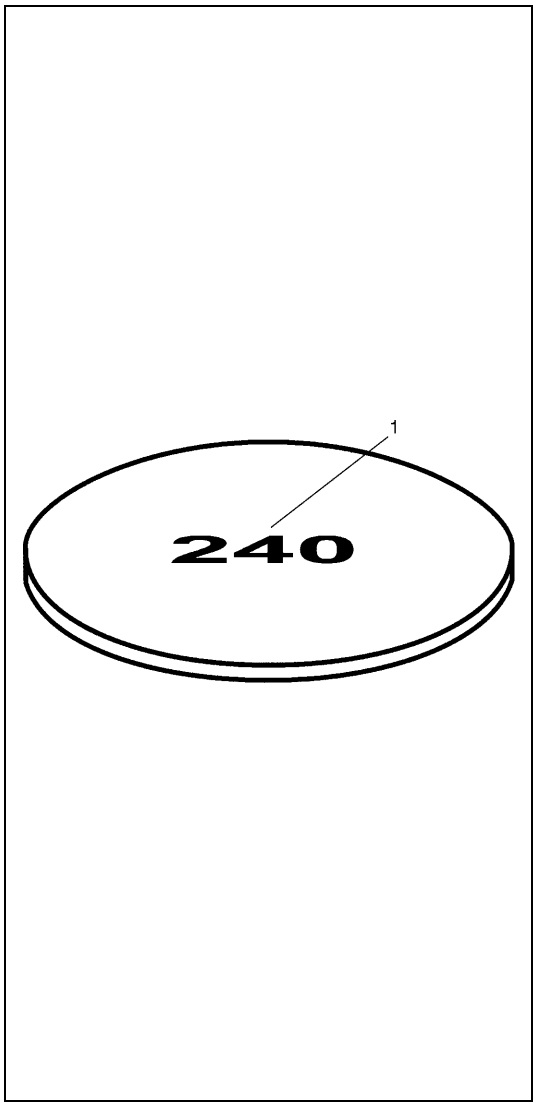

6) Select new shim No. (1) with a thickness as close as possible to calculated valve.

Available new shims No.

Thickness mm (in.)	Shim No.	Thickness mm (in.)	Shim No.
2.18 (0.0856)	218	2.68 (0.1055)	268
2.20 (0.0866)	220	2.70 (0.1063)	270
2.23 (0.0878)	223	2.73 (0.1075)	273
2.25 (0.0886)	225	2.75 (0.1083)	275
2.28 (0.0898)	228	2.78 (0.1095)	278
2.30 (0.0906)	230	2.80 (0.1102)	280
2.33 (0.0917)	233	2.83 (0.1114)	283
2.35 (0.0925)	235	2.85 (0.1122)	285
2.38 (0.0937)	238	2.88 (0.1134)	288
2.40 (0.0945)	240	2.90 (0.1142)	290
2.43 (0.0957)	243	2.93 (0.1154)	293
2.45 (0.0965)	245	2.75 (0.1161)	295
2.48 (0.0976)	248	2.98 (0.1173)	298
2.50 (0.0984)	250	3.00 (0.1181)	300
2.53 (0.0996)	253		
2.55 (0.1004)	255		
2.58 (0.1016)	258		
2.60 (0.1024)	260		
2.63 (0.1035)	263		
2.65 (0.1043)	265		

7) Install new shim facing shim No. side with tappet.

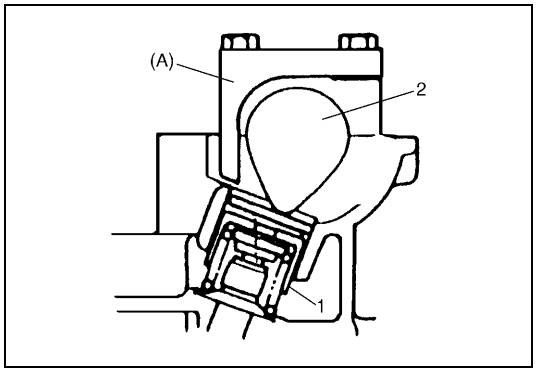

8) Lift valve by turning crankshaft counterclockwise (in opposite direction against above Step 4) and remove special tool.

Special tool
(A) : 09916-6702

1. Tappet
2. Camshaft

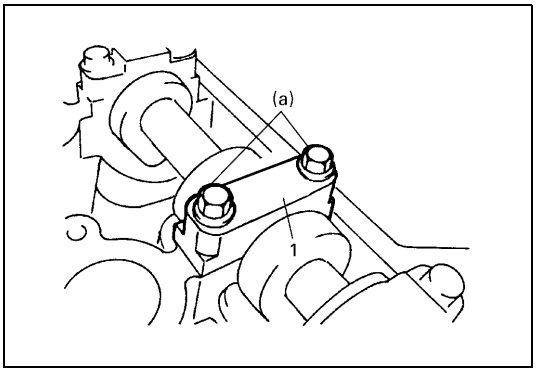

9) Install camshaft housing (1) and tighten bolts to specified torque.

Tightening torque
Camshaft housing bolt (a) : 11 N·m (1.1 kg-m, 8.0 lb-ft)

10) Check valve clearance again after adjusting it.

11) After checking and adjusting all valves.
12) Install cylinder head cover, referring to “CYLINDER HEAD COVER”.

ON-VEHICLE SERVICE

AIR CLEANER ELEMENT

REMOVAL

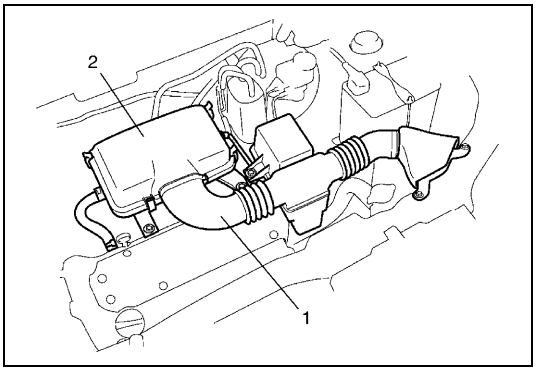

1) Disconnect air cleaner inlet hose (1) from air cleaner case (2).
2) Open air cleaner case by unhooking its clamps.
3) Remove air cleaner element from case.

INSTALLATION

Reverse removal procedure for installation.

INSPECTION AND CLEANING

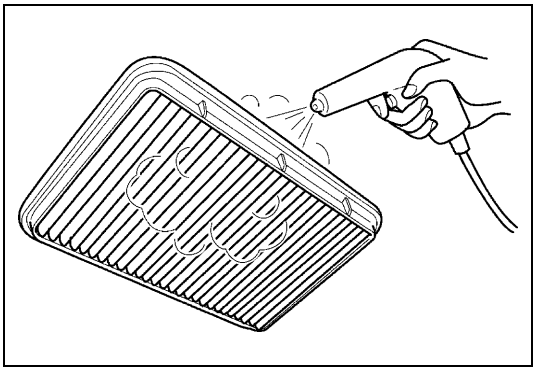

- Check air cleaner element for dirt. Replace excessively dirty element.
- Blow off dust by compressed air from air outlet side of element.

AIR CLEANER ASSEMBLY AND RESONATOR

REMOVAL

1) Disconnect negative cable at battery.

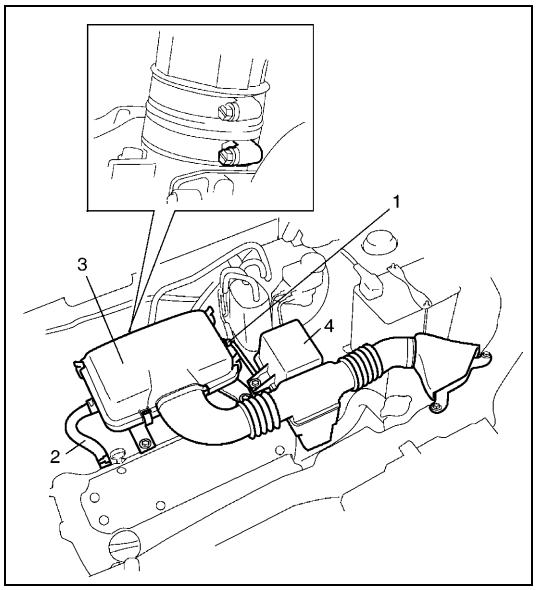

2) Disconnect IAT sensor coupler (1).
3) Disconnect breather hose (2) from cylinder head cover.
4) Remove air cleaner assembly (3), resonator (4) and their hoses.

INSTALLATION

Reverse removal procedure for installation.

KNOCK SENSOR

Refer to “KNOCK SENSOR” in Section 6E.

CYLINDER HEAD COVER

REMOVAL

1) Disconnect negative cable at battery.
2) Remove air cleaner assembly, resonator and hoses by referring to “AIR CLEANER ASSEMBLY AND RESONATOR”.

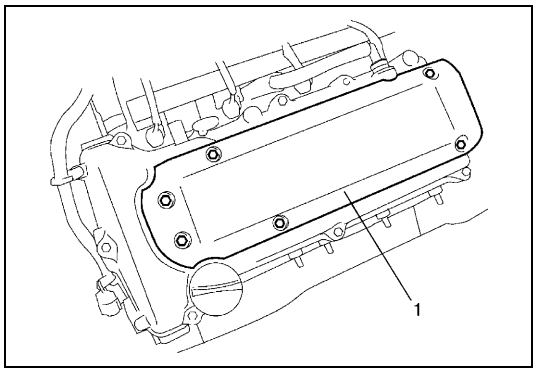

3) Remove cylinder head upper cover (1).

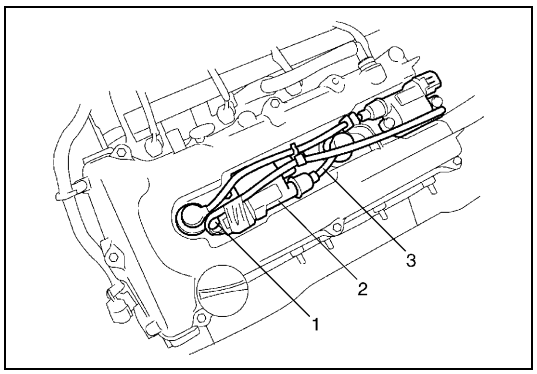

4) Disconnect ignition coil couplers (1).
5) Remove ignition coil assemblies (2) with high-tension cord (3).

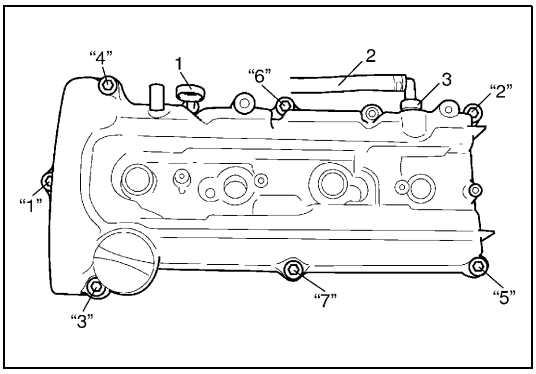

6) Remove oil level gauge (1).
7) Disconnect PCV hose (2) from PCV valve (3) and release harness clamp.
8) Remove cylinder head cover mounting bolts in such order as indicated in figure.

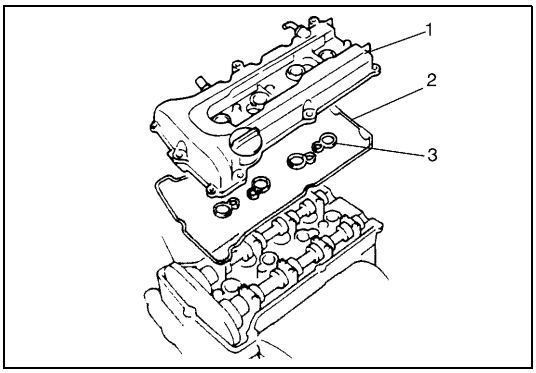

9) Remove cylinder head cover (1) with cylinder head cover gasket (2) and spark plug hole gasket (3).

INSTALLATION

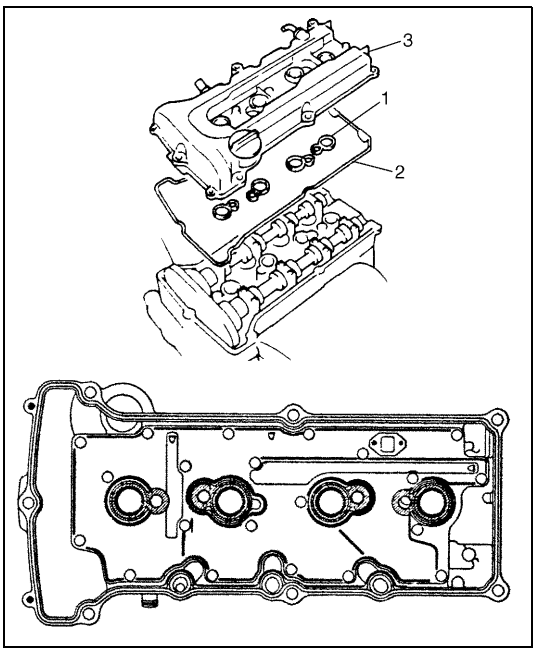

1) Install new spark plug hole gaskets (1) and new cylinder head cover gasket (2) to cylinder head cover (3) as shown in figure.
2) Remove oil, old sealant, and dust from sealing surface on cylinder head and cover. After cleaning, apply sealant "A" to the following point.

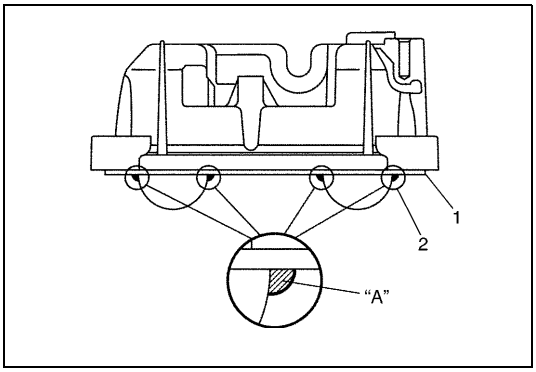

- Cylinder head gasket (1) sealing surface area (2) as shown.

"A" : Sealant 99000-31150

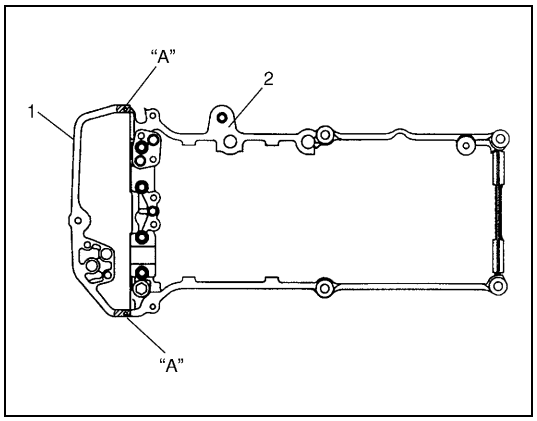

- Timing chain cover (1) and cylinder head (2) matching surface as shown.

"A" : Sealant 99000-31150

3) Install cylinder head cover to cylinder head.

NOTE:

When installing cylinder head cover, use care so that cylinder head cover gasket or spark plug hole gaskets will not get out of place or fall off.

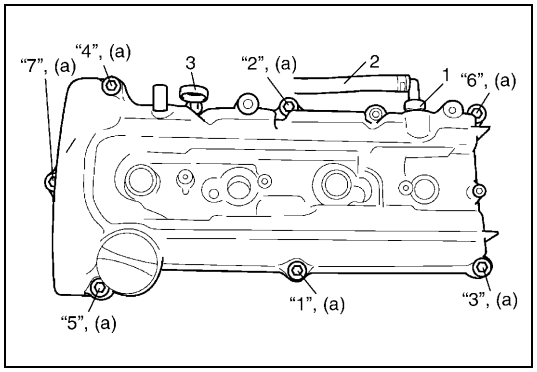

4) Tighten bolts in such order as indicated in figure a little at a time till they are tightened to specified torque.

Tightening torque
Cylinder head cover bolts (a) : 8 N·m (0.8 kg-m, 6.0 lb-ft)

5) Connect PCV hose (2) to PCV valve (1).
6) Install oil level gauge (3).

7) Install ignition coil assemblies with high-tension cord.
8) Connect ignition coil couplers and clamp harness securely.
9) Install cylinder head upper cover.
10) Install air cleaner assembly, resonator and hoses referring to "AIR CLEANER ASSEMBLY AND RESONATOR".
11) Connect negative cable at battery.

THROTTLE BODY AND INTAKE MANIFOLD

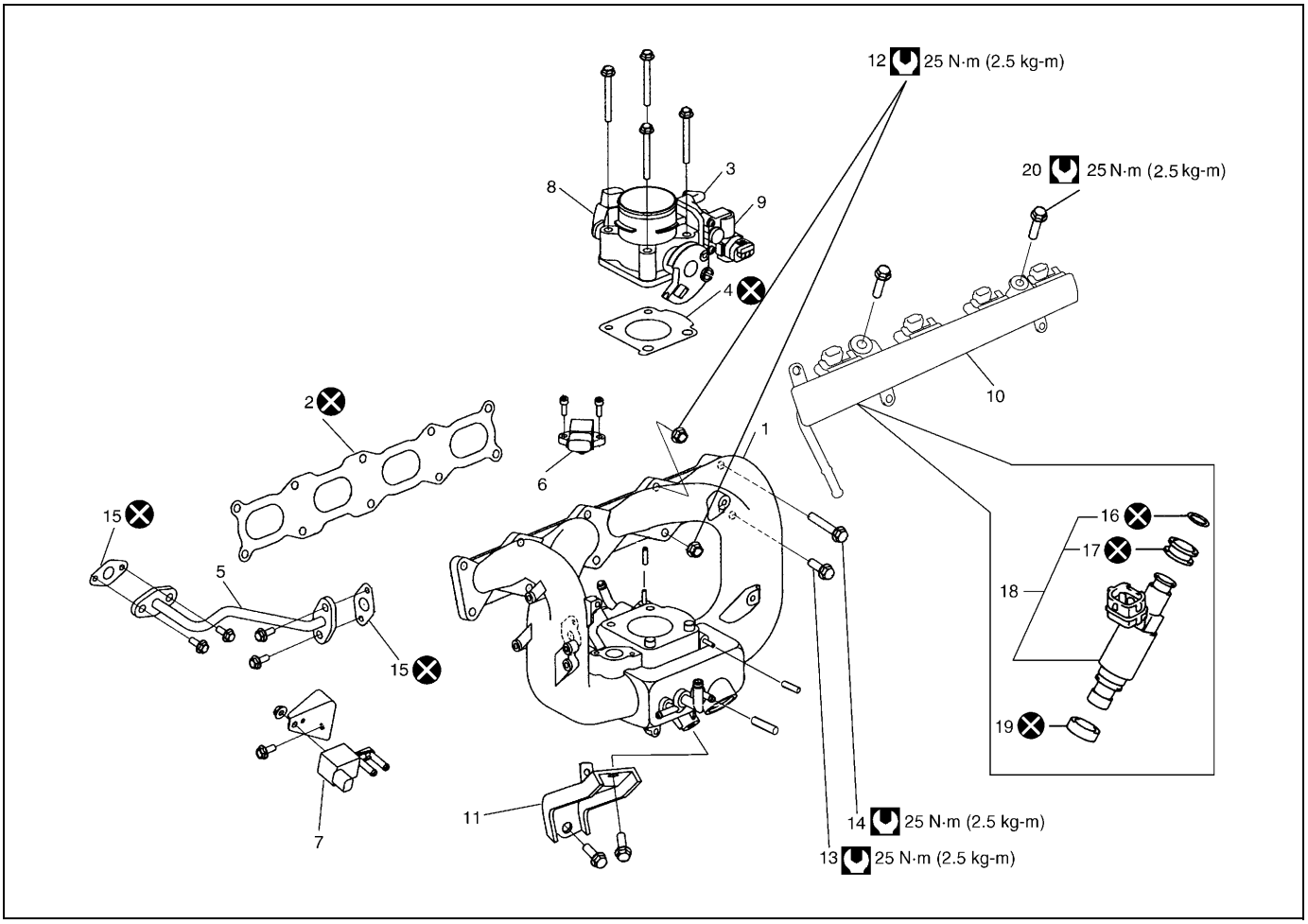

1. Intake manifold	7. EVAP canister purge valve	13. Intake manifold mounting bolt (short)	19. Cushion
2. Intake manifold gasket	8. TP sensor	14. Intake manifold mounting bolt (long)	20. Fuel delivery pipe mounting bolt
3. Throttle body	9. IAC valve	15. EGR pipe gasket	Tightening torque
4. Gasket	10. Fuel delivery pipe	16. O-Ring	Do not reuse.
5. EGR pipe	11. Intake manifold stiffener	17. Grommet	
6. MAP sensor	12. Intake manifold mounting nut	18. Injector assembly	

REMOVAL

1) Relieve fuel pressure according to fuel pressure relief procedure described in Section 6.
2) Disconnect negative cable at battery.
3) Drain coolant by loosening drain plug (1).

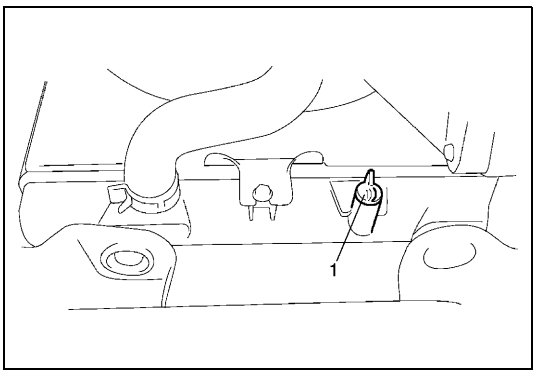

WARNING:

To help avoid danger of being burned, do not remove drain plug (1) and radiator cap while engine and radiator are still hot. Scalding fluid and steam can be blown out under pressure if plug and cap are taken off too soon.

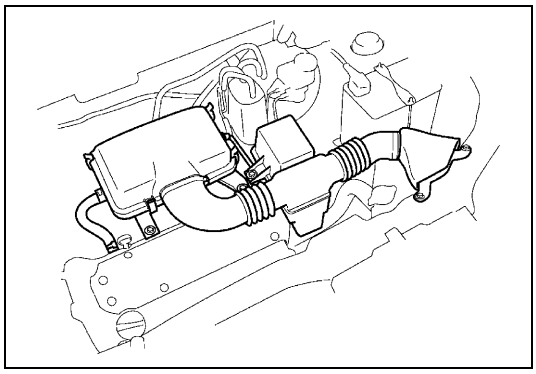

4) Remove air cleaner assembly, resonator and hoses by referring to “AIR CLEANER ASSEMBLY AND RESONATOR”.

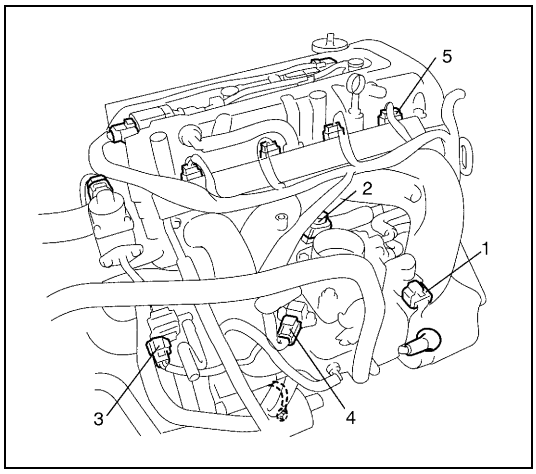

5) Disconnect the following electric lead wires :
   - IAC valve (1)
   - TP sensor (2)
   - EVAP canister purge valve (3)
   - MAP sensor (4)
   - Fuel injector wire harness at couplers (5)
   - Each wire harness clamps
6) Disconnect accelerator cable from throttle body.

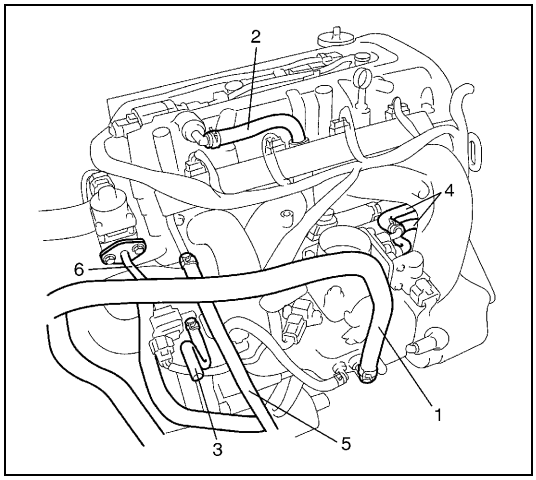

7) Disconnect the following hoses :
   - Brake booster hose (1) from intake manifold
   - PCV hose (2) from PCV valve
   - Canister purge hose (3) from EVAP canister purge valve
   - Water hoses (4) from throttle body and thermostat case
   - Fuel feed hose (5) from fuel delivery pipe
8) Remove fuel delivery pipe with fuel injectors from cylinder head.
9) Disconnect EGR pipe (6) from EGR valve.

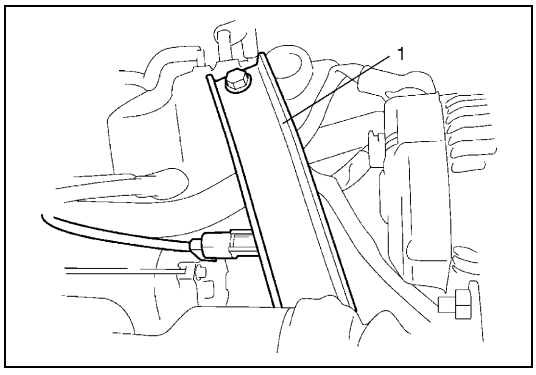

10) Remove intake manifold stiffener (1).

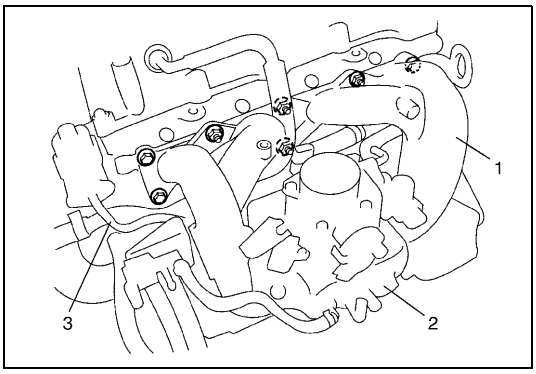

11) Remove intake manifold (1) with throttle body (2) and EGR pipe (3) from cylinder head, and then its gasket.

INSTALLATION

Reverse removal procedure for installation noting the followings.

- Use new intake manifold gasket and EGR pipe gasket.

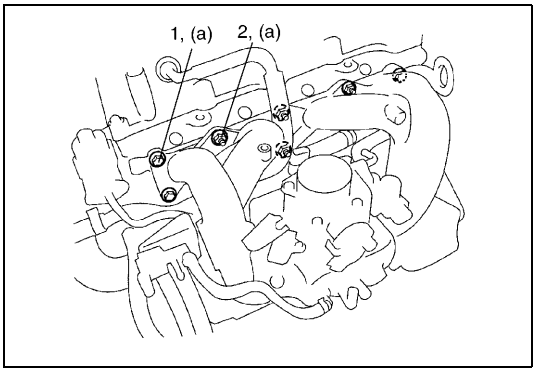

- Tighten bolts (1) and nuts (2) to specified torque.

Tightening torque
Intake manifold bolts and nuts
(a) : 25 N·m (2.5 kg-m, 18.0 lb-ft)

- Check to ensure that all removed parts are back in place. Reinstall any necessary parts which have not been reinstalled.
- Adjust accelerator cable play referring in Section 6E1.
- Refill cooling system referring in Section 6B.
- Upon completion of installation, turn ignition switch ON but engine OFF and check for fuel leaks.
- Finally, start engine and check for engine coolant leaks.

EXHAUST MANIFOLD

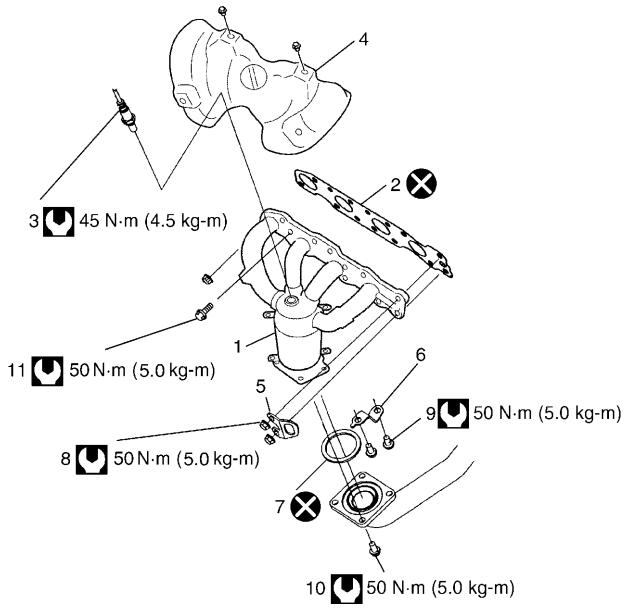

1. Exhaust manifold	6. Exhaust manifold stiffener	11. Exhaust manifold mounting bolt
2. Exhaust manifold gasket	7. Gasket	Tightening torque
3. Heated oxygen sensor (if equipped)	8. Exhaust manifold mounting nut	Do not reuse.
4. Exhaust manifold cover	9. Exhaust manifold stiffener bolt	
5. Engine hook	10. Exhaust pipe bolt	

WARNING:

To avoid danger of being burned, do not service exhaust system while it is still hot. Service should be performed after system cools down.

REMOVAL

1) Disconnect negative cable at battery.

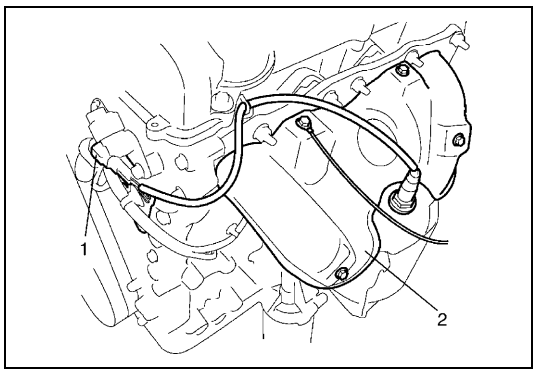

2) Disconnect heated oxygen sensor coupler (1) (if equipped) and detach it from its stay.
3) Remove front bumper with front grille and heat insulator panel by referring to Section 9.
4) Remove exhaust manifold cover (2).

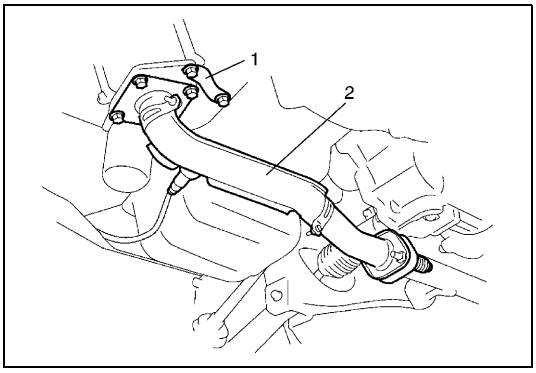

5) Remove exhaust manifold stiffener (1).
6) Disconnect exhaust No.1 pipe (2) from exhaust manifold.

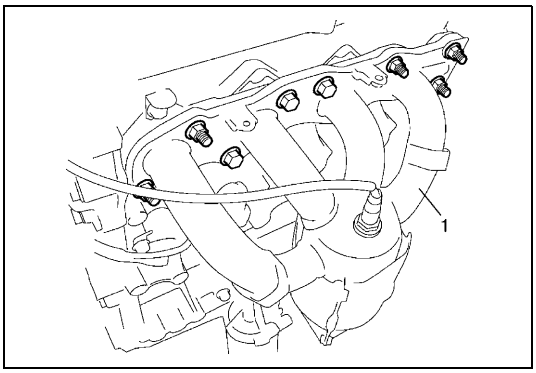

7) Remove exhaust manifold (1) and its gasket from cylinder head.

INSTALLATION

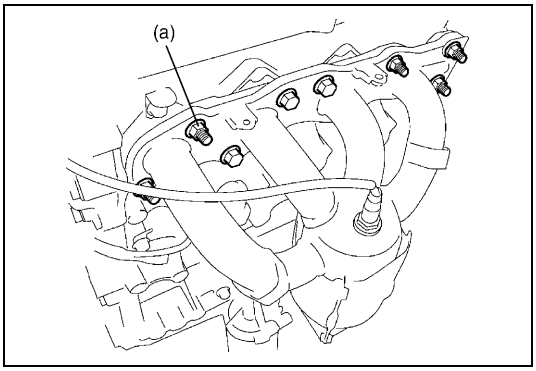

1) Install new gasket to cylinder head.
   Then install exhaust manifold.
   Tighten manifold bolts and nuts to specified torque.

Tightening torque
Exhaust manifold bolts and nuts
(a) : 50 N·m (5.0 kg-m, 40.0 lb-ft)

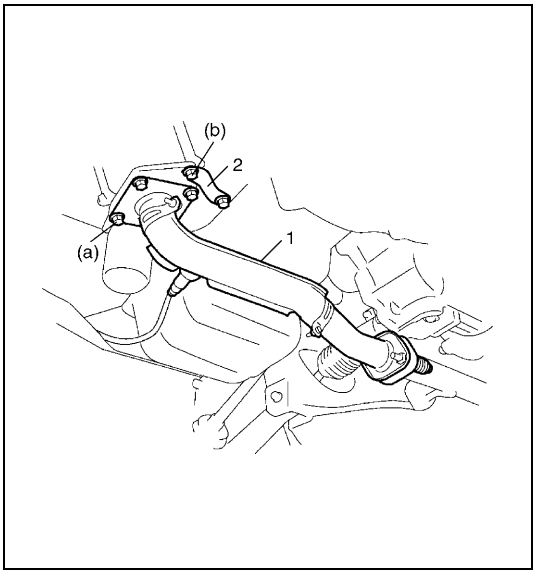

2) Install seal ring and connect exhaust No.1 pipe (1) to exhaust manifold.
   Before installing seal ring, check it for deterioration or damage, and replace as necessary.
   Tighten pipe fasteners to specified torque.

Tightening torque
Exhaust No.1 pipe bolts (a) : 50 N·m (5.0 kg-m, 36.5 lb-ft)

3) Install exhaust manifold stiffener (2).
   Tighten exhaust manifold stiffener bolts to specified torque.

Tightening torque
Exhaust manifold stiffener bolts
(b) : 50 N·m (5.0 kg-m, 36.5 lb-ft)

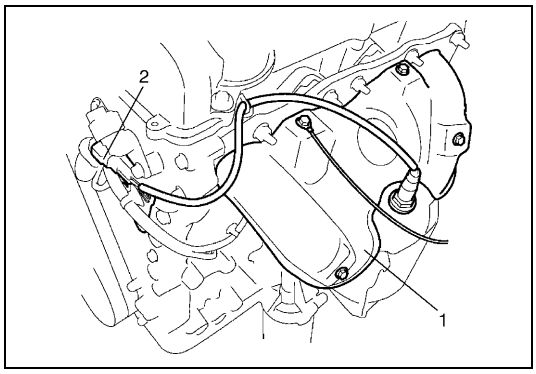

4) Install exhaust manifold cover (1) .
5) Connect heated oxygen sensor coupler (2) and fit coupler to bracket securely (if equipped).

6) Install heat insulator panel and front bumper with front grille by referring to Section 9.
7) Connect negative cable at battery.
8) Check exhaust system for exhaust gas leakage.

OIL PAN AND OIL PUMP STRAINER

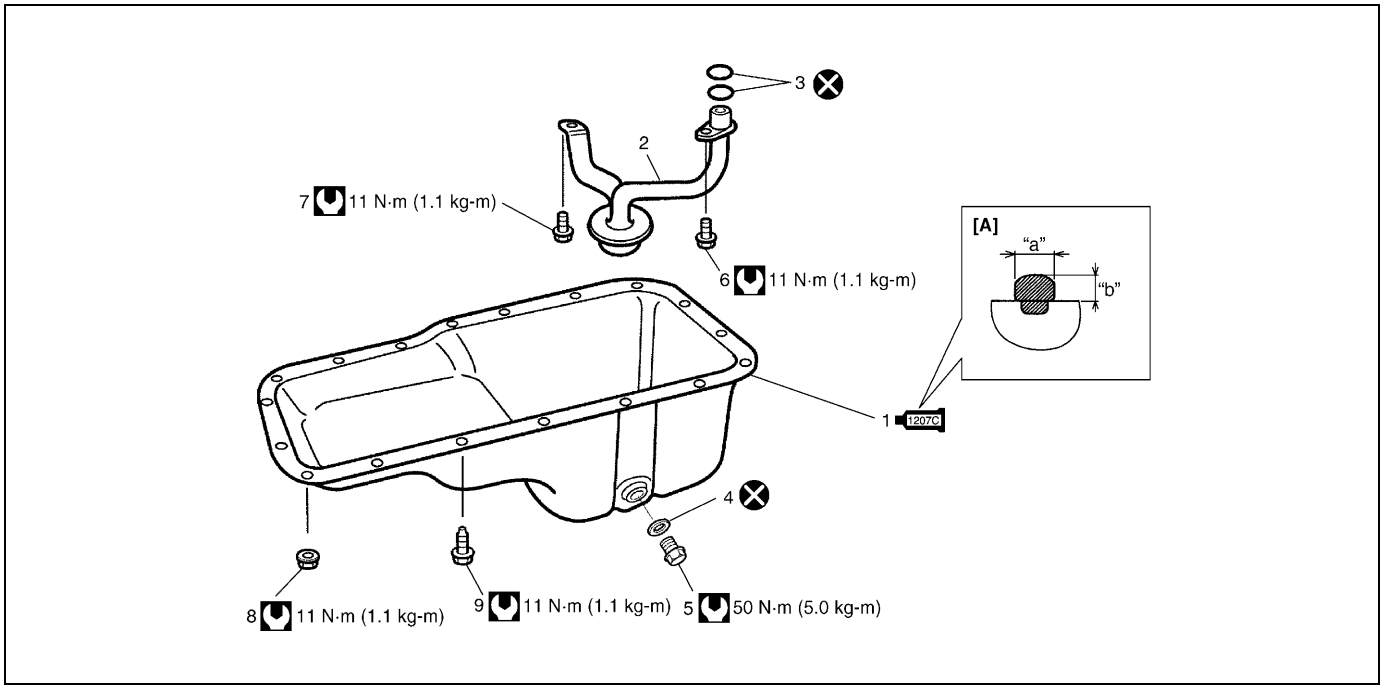

[A] : Sealant application amount	3. O-ring	8. Oil pan nut
"a" : 3 mm (0.12 in.)	4. Gasket	9. Oil pan bolt
"b" : 2 mm (0.08 in.)	5. Drain plug	Tightening torque
1207C 1. Oil pan : Apply sealant 99000-31150 to mating surface.	6. Strainer bolt	Do not reuse.
2. Strainer	7. Bracket bolt	

REMOVAL

1) Disconnect negative cable at battery.
2) Disconnect heated oxygen sensor coupler and detach it from its stay.
3) Remove oil level gauge.

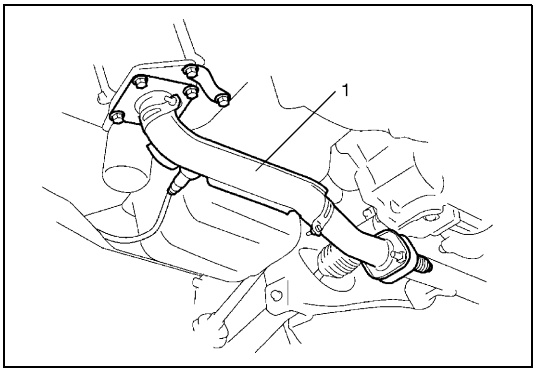

4) Remove exhaust No.1 pipe (1).

5) Drain engine oil by removing drain plug.

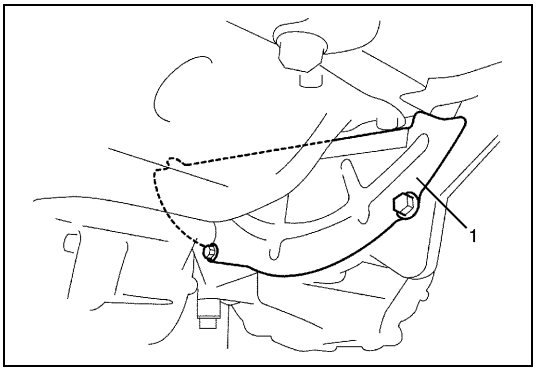

6) Remove clutch housing (torque converter housing for A/T vehicle) lower plate (1).
7) For 4WD vehicle, remove transfer referring to Section 7D.

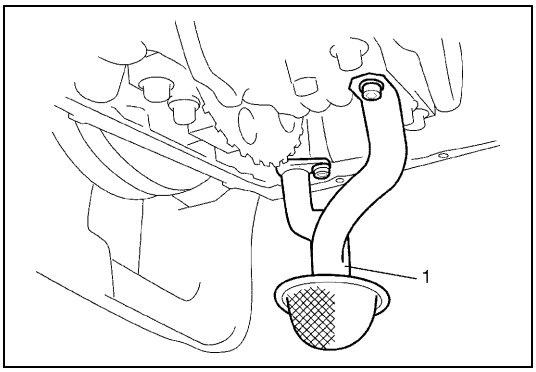

8) Remove oil pan and then oil pump strainer (1) from cylinder block.

CLEAN

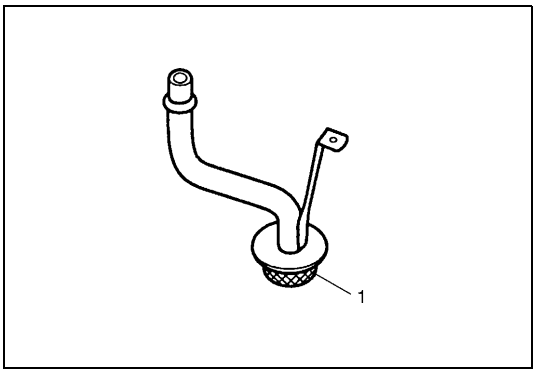

- Clean oil pump strainer screen (1).

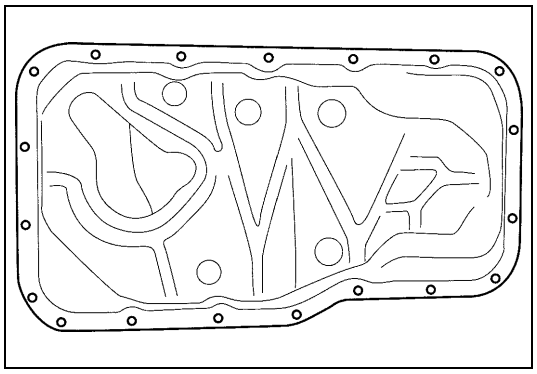

- Clean sealing surface on oil pan and cylinder block.
  Remove oil, old sealant and dust from sealing surface.

INSTALLATION

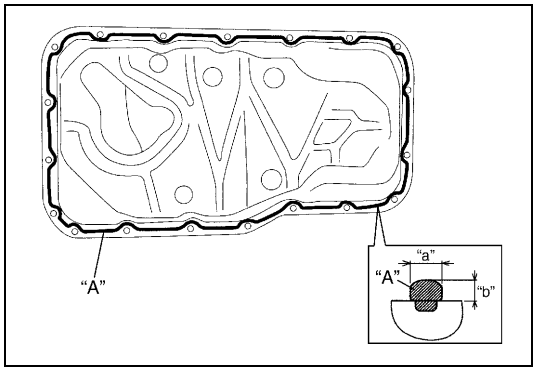

1) Apply sealant continuously to oil pan mating surface as shown in figure.

"A" : sealant 99000-31150

Sealant amount for oil pan
Width "a" : 3 mm (0.12 in.)
Height "b" : 2 mm (0.08 in.)

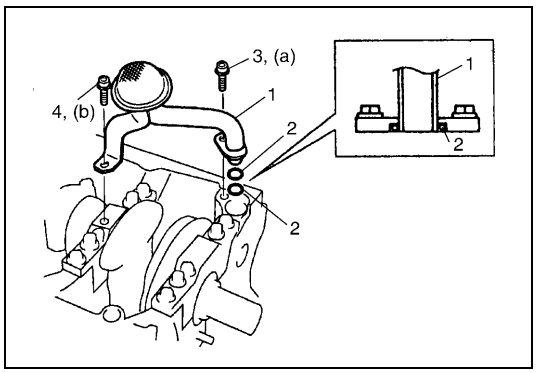

2) Install new O-rings (2) in the position as shown in figure and install oil pump strainer (1).
   Tighten strainer bolt (3) first and then bracket bolt (4) to specified torque.

Tightening torque
Oil pump strainer bolt (a) : 11 N·m (1.1 kg-m, 8.0 lb-ft)
Oil pump strainer bracket bolt
(b) : 11 N·m (1.1 kg-m, 8.0 lb-ft)

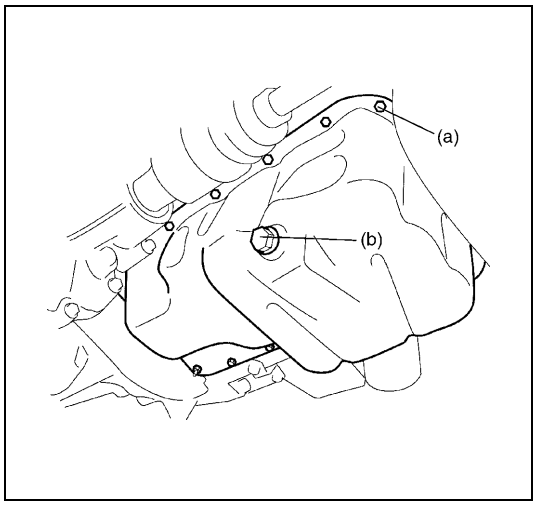

3) After fitting oil pan to cylinder block, run in securing bolts and start tightening at the center :
   move wrench outward, tightening one bolt at a time. Tighten bolts and nuts to specified torque.

Tightening torque
Oil pan bolts and nuts (a) : 11 N·m (1.1 kg-m, 8.0 lb-ft)

4) Install new gasket and drain plug to oil pan.
   Tighten drain plug to specified torque.

Tightening torque
Oil pan drain plug bolt (b) : 50 N·m 5.0 kg-m, 36.5 lb-ft)

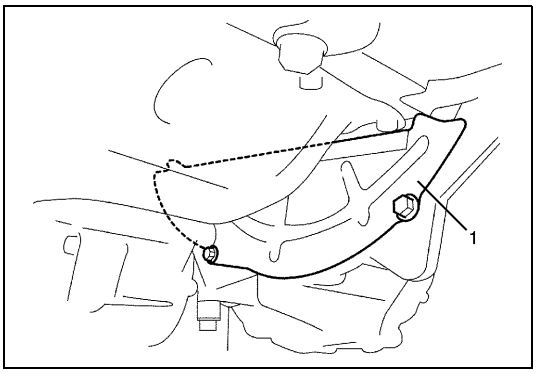

5) Install clutch housing (torque converter housing for A/T vehicle) lower plate (1).
6) For 4WD vehicle, install transfer by referring to Section 7D.

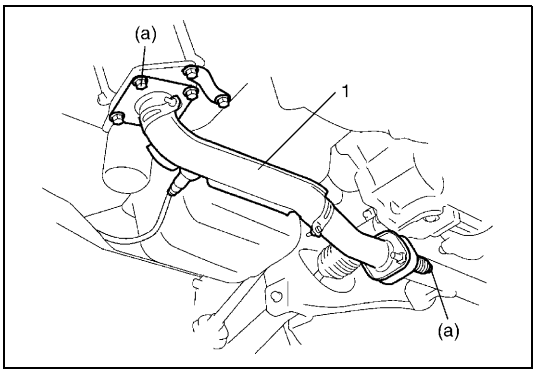

7) Install exhaust No.1 pipe (1).
   Tighten bolts to specified torque.

Tightening torque
Exhaust No.1 pipe bolts (a) : 50 N·m 5.0 kg-m, 36.5 lb-ft)

8) Install oil level gauge.
9) Refill engine with engine oil referring to “ENGINE OIL CHANGE” in Section 0B.
10) Verify that there is no engine oil leakage and exhaust gas leakage at each connection.

TIMING CHAIN COVER

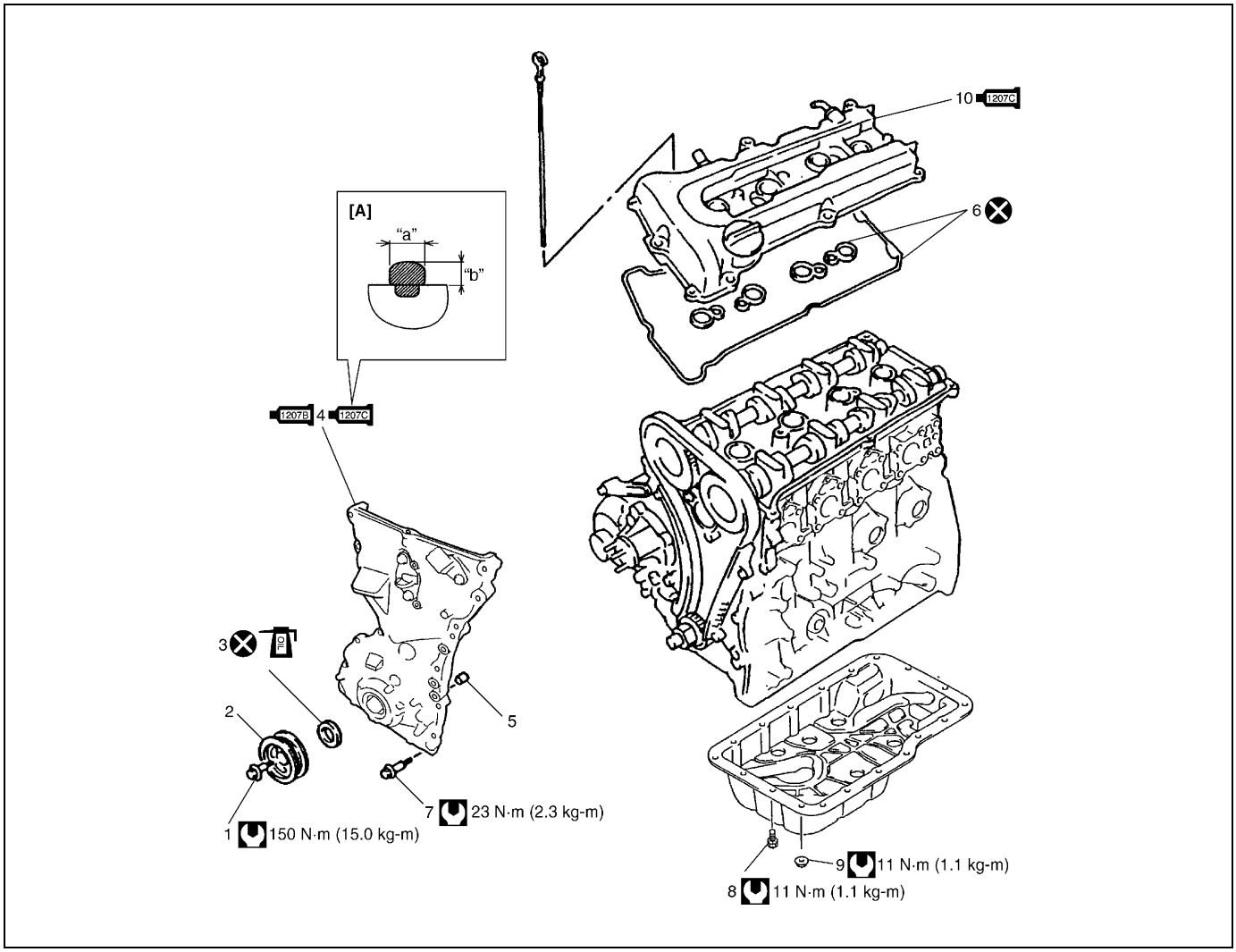

[A] : Sealant application amount	3. Oil seal : Apply engine oil to oil seal lip.	8. Oil pan mounting bolt
"a" : 3 mm (0.12 in.)	4. Timing chain cover : Apply sealant 99000-31140 to the mating surface of cylinder and cylinder head. : Apply sealant 99000-31150 to the mating surface of timing chain cover referring to the figure of Step 1) in INSTALLATION.	9. Oil pan mounting nut
"b" : 2 mm (0.08 in.)	5. Pin	10. Cylinder head cover : Apply sealant 99000-31150 to the sealing point for timing chain cover mating surface and cylinder head gasket sealing point. Refer to "CYLINDER HEAD COVER INSTALLATION".
1. Crankshaft pulley bolt	6. Cylinder head gasket	Tightening torque
2. Crankshaft pulley	7. Timing chain cover mounting bolts	Do not reuse.

REMOVAL

1) Disconnect negative cable at battery.
2) Disconnect the following electric lead wires, and remove these connector bracket.
   - CMP sensor
   - Heated oxygen No.1 and No.2 sensors
   - Engine oil pressure switch

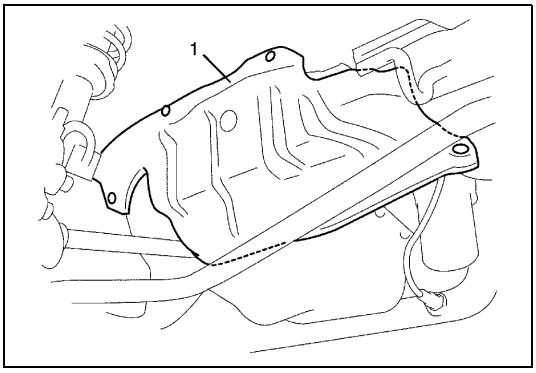

3) Remove right side engine under cover (1).

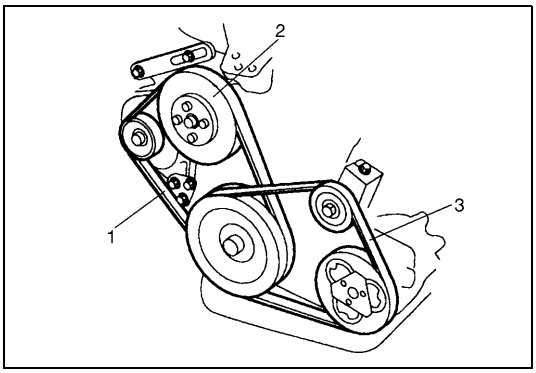

4) Remove A/C compressor belt (3) (if equipped).
5) Remove water pump belt (1).
6) Remove water pump pulley (2).
7) Drain engine oil.

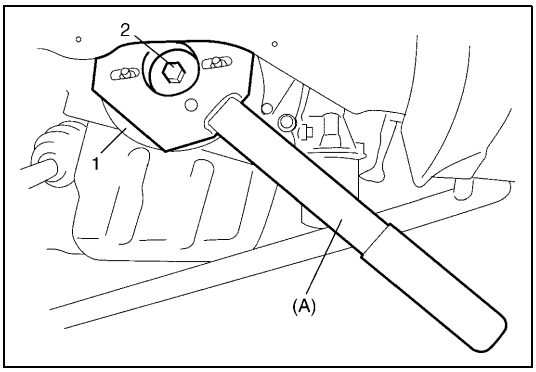

8) Remove crankshaft pulley bolt (2).
   To lock crankshaft pulley (1), use special tool with it as shown in figure.

   Special tool
   (A) : 09917-68221

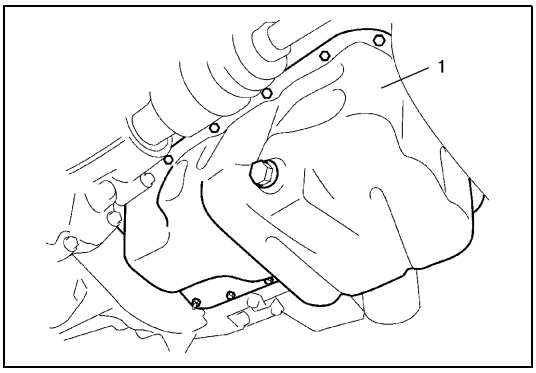

9) Remove oil pan (1) referring to “OIL PAN AND OIL PUMP STRAINER”.

10) Remove cylinder head cover referring to “CYLINDER HEAD COVER”.

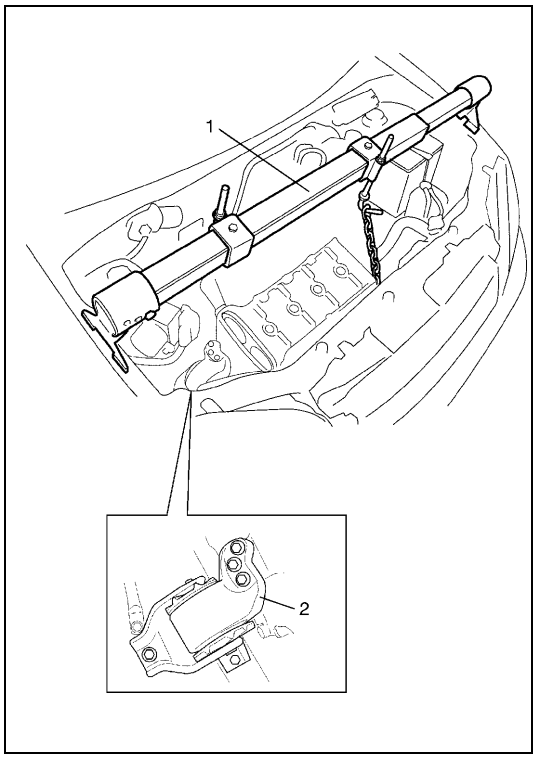

11) Support engine with supporting device (1).
12) Remove engine right side mounting (2) with bracket from timing chain cover and body.

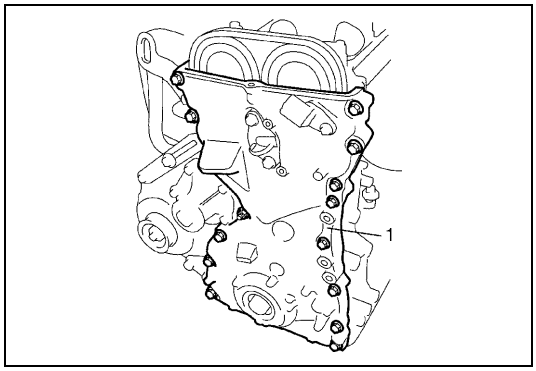

13) Remove timing chain cover (1).

CLEAN

- Clean sealing surface on timing chain cover, cylinder block and cylinder head.
  Remove oil, old sealant and dust from sealing surface.

INSPECTION

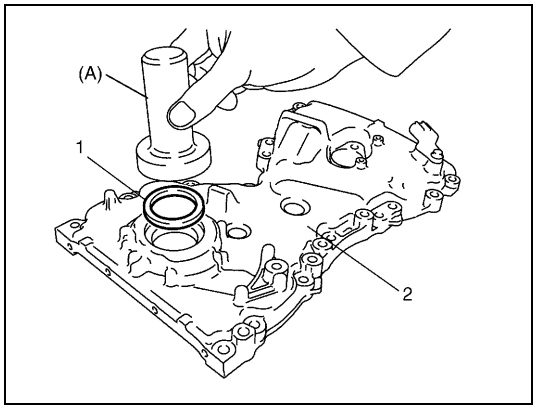

- Check oil seal (1) lip for fault or other damage.
  Replace as necessary.

NOTE:

When installing new oil seal, tap it in until its surface is flash with edge of timing chain cover (2).
To install oil seal, use special tool (Bearing installer).

Special tool
(A) : 09913-75520

INSTALLATION

Reverse removal procedure to install timing chain cover, noting the following points.

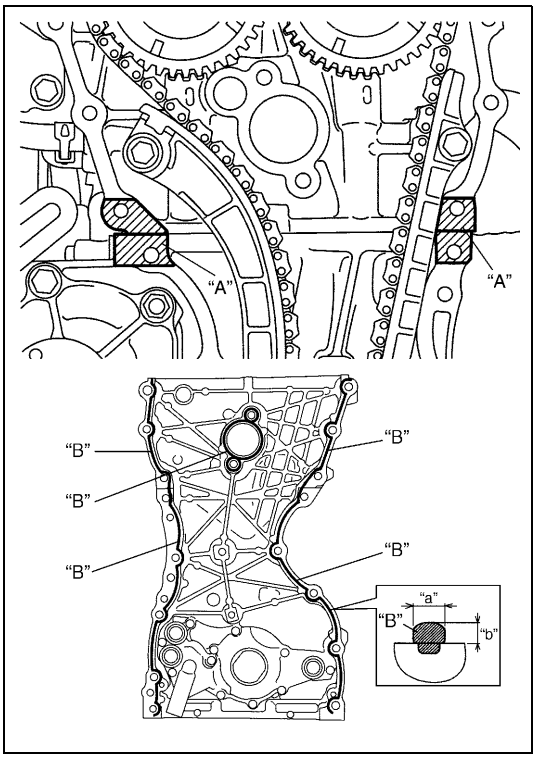

1) Apply sealant "A" to mating surface of cylinder and cylinder head and "B" to mating surface of timing chain cover as shown in figure.

"A" : Sealant 99000-31140
"B" : Sealant 99000-31150

Sealant amount for timing chain cover
Width "a" : 3 mm, 0.12 in.
Height "b" : 2 mm, 0.08 in.

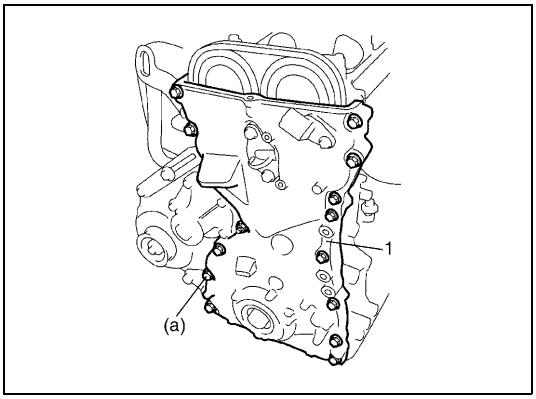

2) Apply engine oil to oil seal lip, then install timing chain cover (1).
Tighten bolts and nut to specified torque.

NOTE:

Before installing timing chain cover, check that pin is securely fitted.

Tightening torque
Timing chain cover bolts (a) : 23 N·m (2.3 kg-m, 17.0 lb-ft)

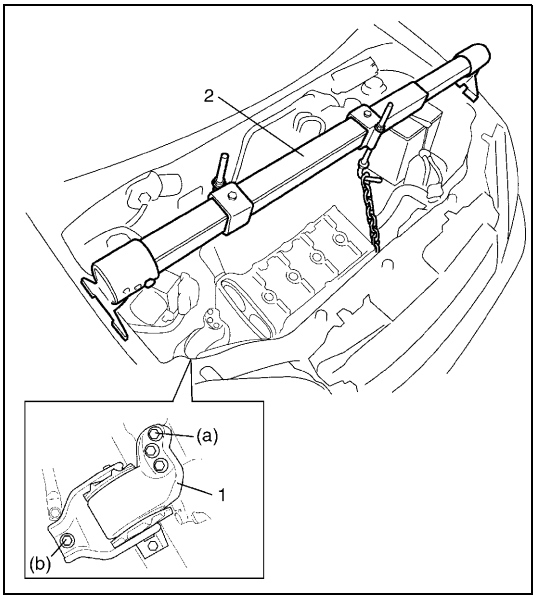

3) Install engine right mounting (1) with bracket to timing chain cover and body.
Tighten bolts to specified torque.

Tightening torque
Engine mounting bolt (a) : 75 N·m (7.5 kg-m, 54.5 lb-ft)
Engine mounting bracket bolt
(b) : 55 N·m (5.5 kg-m, 40.0 lb-ft)

4) Remove support device (2).

5) Install cylinder head cover referring to “CYLINDER HEAD COVER”.

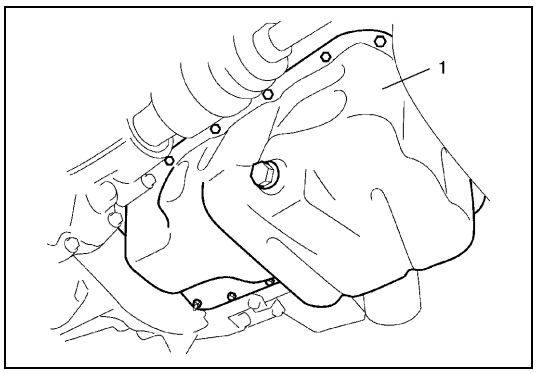

6) Install oil pan (1) referring to “OIL PAN AND OIL PUMP STRAINER”.

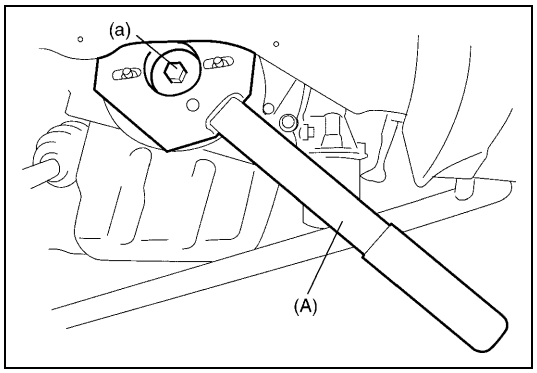

7) Install crankshaft pulley (1). Tighten bolt (2) to specified torque. To lock crankshaft pulley, use special tool with it as shown in the figure.

Special tool
(A) : 09917-68221

Tightening torque
Crankshaft pulley bolt (a) : 150 N·m (15.0 kg-m, 108.5 lb-ft)

8) Adjust water pump belt tension referring to Section 0B for adjusting procedure.
9) Adjust A/C compressor belt tension (if equipped) referring to Section 1B for adjusting procedure.
10) Install right side engine under cover.
11) Connect disconnected electric lead wires securely.
12) Refill engine with engine oil.
13) Verify that there is no oil leakage and exhaust gas leakage at each connection.

OIL PUMP

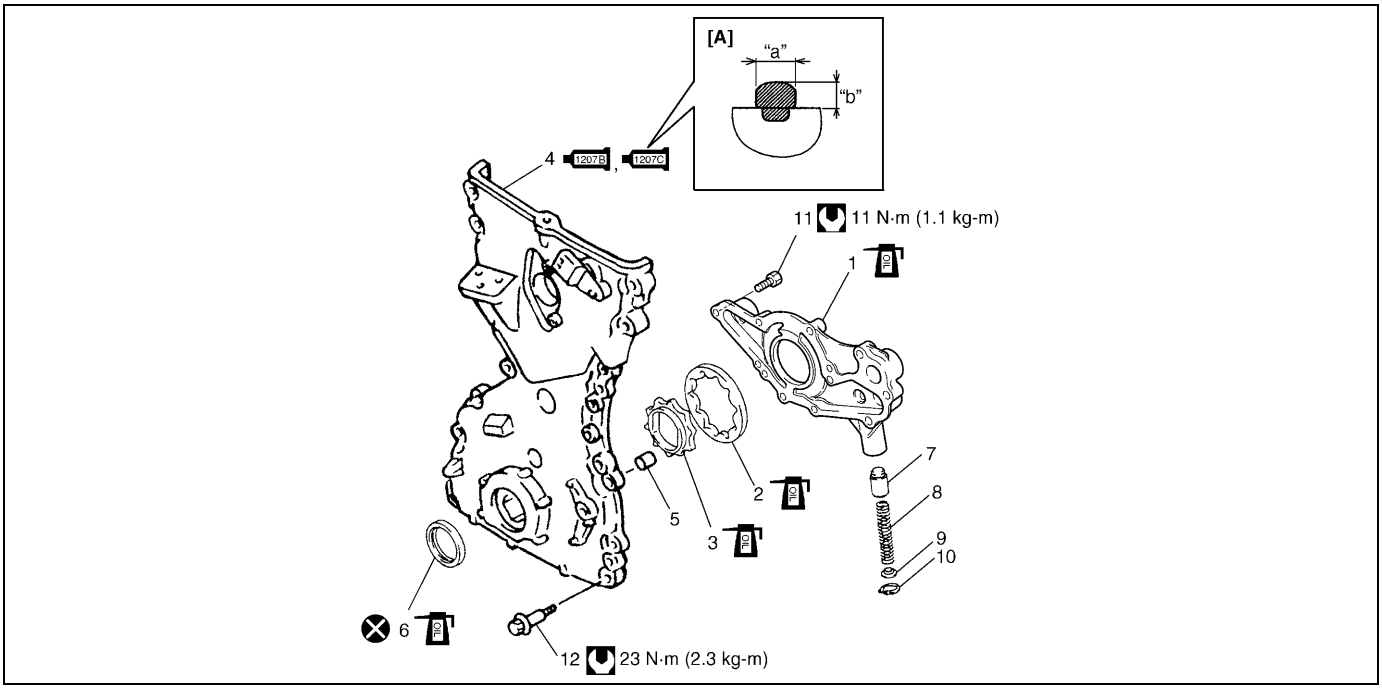

[A] : Sealant application amount	4. Timing chain cover : Apply sealant 99000-31140 to the mating surface of cylinder and cylinder head. : Apply sealant 99000-31150 to mating surface of timing chain cover referring to the figure of Step 1) in "TIMING CHAIN COVER INSTALLATION".	10. Circlip
"a" : 3 mm (0.12 in.)	5. Pin	11. Oil pump mounting bolt
"b" : 2 mm (0.08 in.)	6. Oil seal	12. Timing chain cover mounting bolts
1. Rotor plate	7. Relief valve	Tightening torque
2. Outer rotor	8. Spring	Do not reuse.
3. Inner rotor	9. Retainer	Apply thin coat of engine oil to sliding surface of each parts.

REMOVAL

1) Disconnect negative cable at battery.
2) Remove timing chain cover, referring to "TIMING CHAIN COVER".

DISASSEMBLY

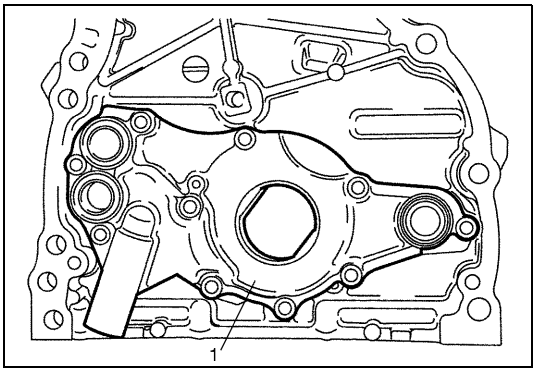

1) Remove rotor plate (1) by removing its mounting bolts.

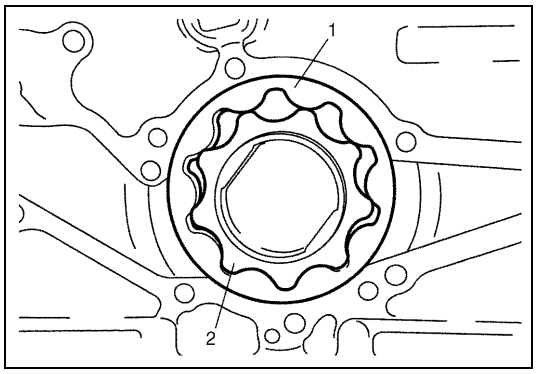

2) Remove outer rotor (1) and inner rotor (2).

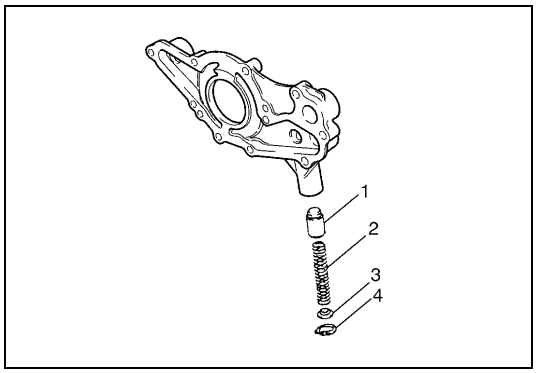

3) Remove relief valve (1), spring (2) and retainer (3) by removing circlip (4).

INSPECTION

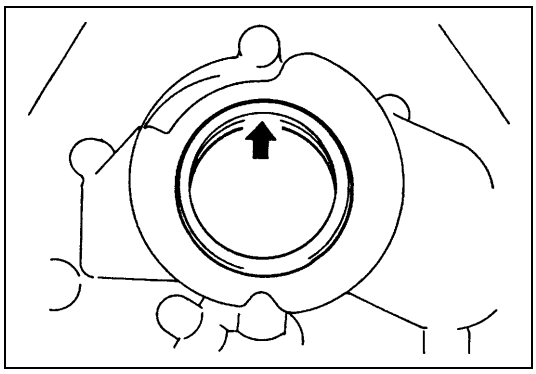

- Check oil seal lip for fault or other damage. Replace as necessary.

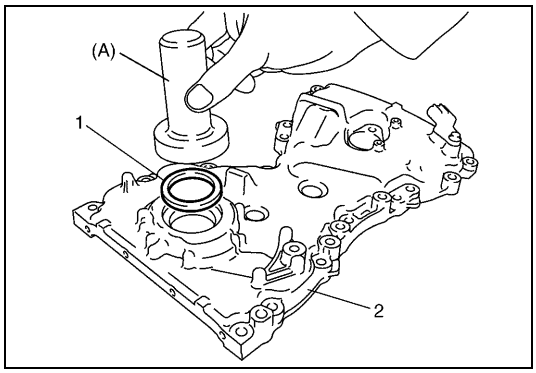

NOTE:

When installing new oil seal (1), press-fit it till its end face is flush with oil pump case (2) end face.

Special tool
(A) : 09913-75520

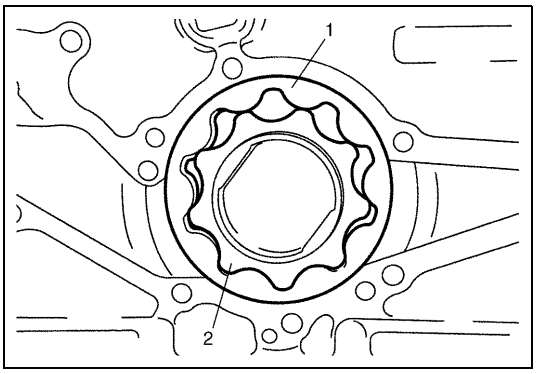

- Check outer (1) and inner rotors (2), rotor plate, and oil pump case for excessive wear or damage.

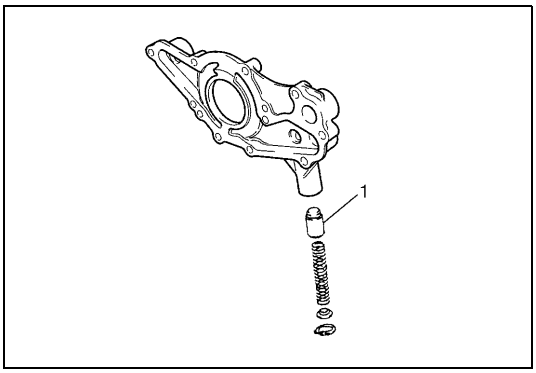

- Check relief valve (1) for excessive wear or damage and operates smoothly.

MEASUREMENT

Radial Clearance

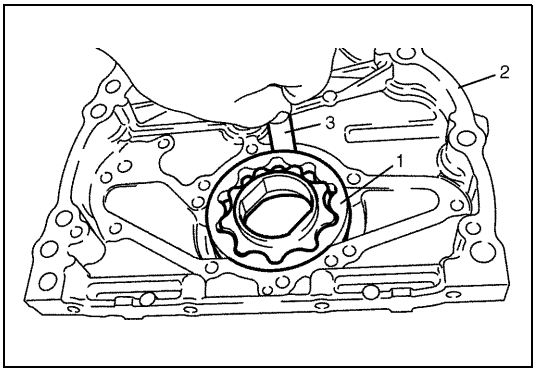

Check radial clearance between outer rotor (1) and case (2), using thickness gauge (3).
If clearance exceeds its limit, replace outer rotor or case.

Limit on radial clearance between outer rotor and case for oil pump
: 0.310 mm (0.0122 in.)

Side Clearance

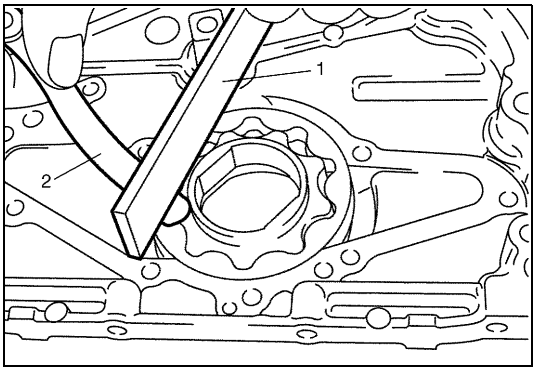

Using straight edge (1) and thickness gauge (2), measure side clearance.

Limit on side clearance for oil pump inner rotor
: 0.15 mm (0.0059 in.)

ASSEMBLY

1) Wash, clean and then dry all disassembled parts.
2) Apply thin coat of engine oil to inner and outer rotors, oil seal lip portion, and inside surfaces of oil pump case and plate.

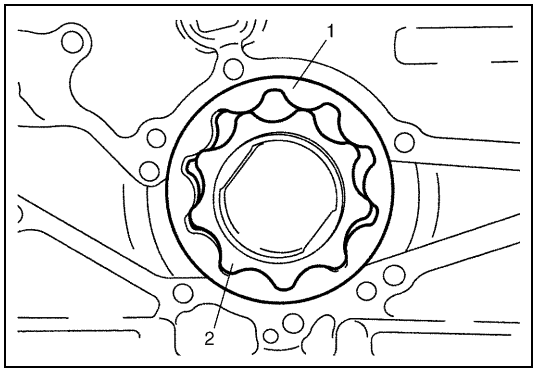

3) Install outer (1) and inner rotors (2) to oil pump case.

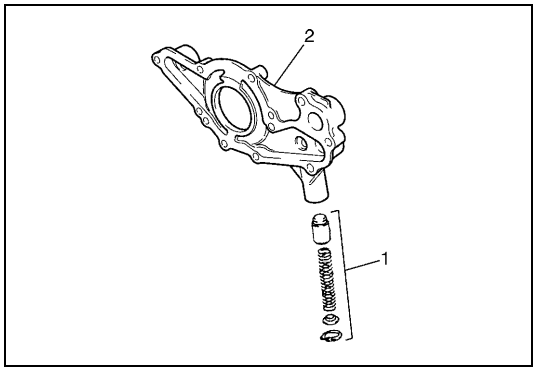

4) Install relief valve component (1) to rotor plate (2).

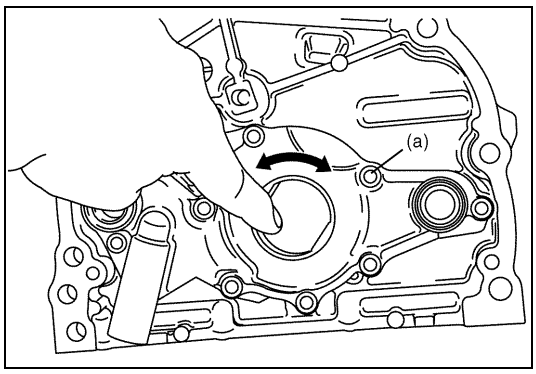

5) Install rotor plate and tighten all bolts to specified torque. After installing plate, check to be sure that rotors turn smoothly by hand (0.3 N·m (0.03 kg-m, 0.25 lb-ft) torque or below).

Tightening torque
Oil pump rotor plate bolts (a) : 11 N·m (1.1 kg-m, 8.0 lb-ft)

INSTALLATION

For installation referring to “TIMING CHAIN COVER”.

TIMING CHAIN AND CHAIN TENSIONER

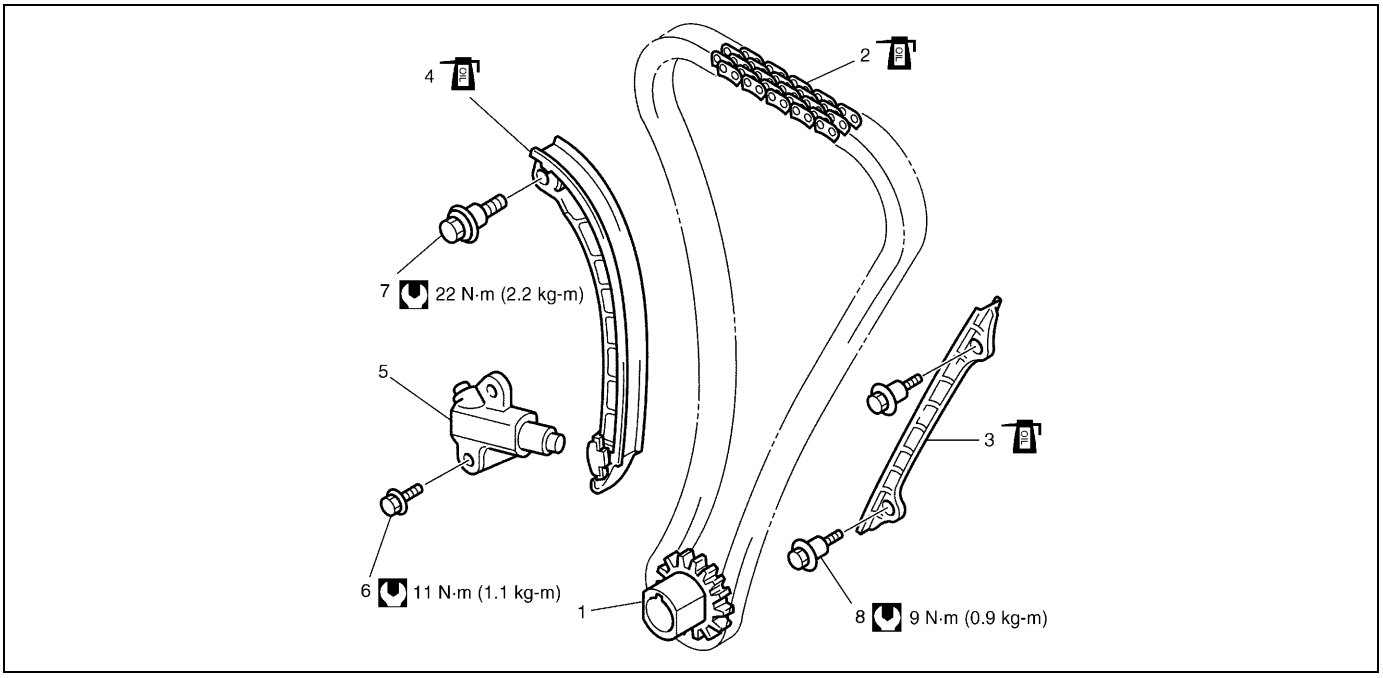

1. Crankshaft timing sprocket	4. Timing chain tensioner : Apply engine oil to sliding surface.	7. Chain tensioner mounting bolt
2. Timing chain : Apply engine oil.	5. Timing chain tensioner adjuster assembly	8. Chain guide mounting bolt
3. Timing chain No.1 guide : Apply engine oil to sliding surface.	6. Chain tensioner adjuster mounting bolt	Tightening torque

REMOVAL

1) Disconnect negative cable at battery.
2) Drain engine oil.
3) Remove oil pan referring to “OIL PAN AND OIL PUMP STRAINER”.
4) Remove cylinder head cover referring to “CYLINDER HEAD COVER”.
5) Remove timing chain cover referring to “TIMING CHAIN COVER”.

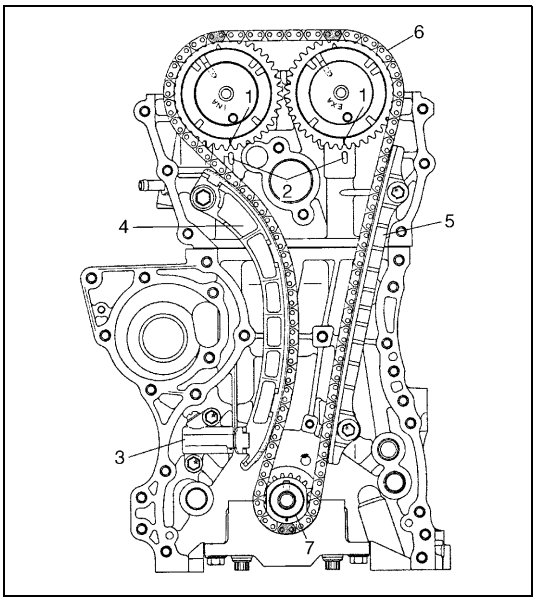

6) Align both intake and exhaust camshaft timing sprocket marks (1) with notches (2) of cylinder head respectively by turning crankshaft.
7) Remove timing chain tensioner adjuster assembly (3).
8) Remove timing chain tensioner (4).
9) Remove timing chain No.1 guide (5).
10) Remove timing chain (6) with crankshaft timing sprocket (7).

CAUTION:
After timing chain is removed, never turn crankshaft and camshafts independently more than its allowable turning range described in “INSTALLATION” section.
If turned, interference may occur between piston and valves and valves themselves, and parts related to piston and valves may be damaged.

INSPECTION

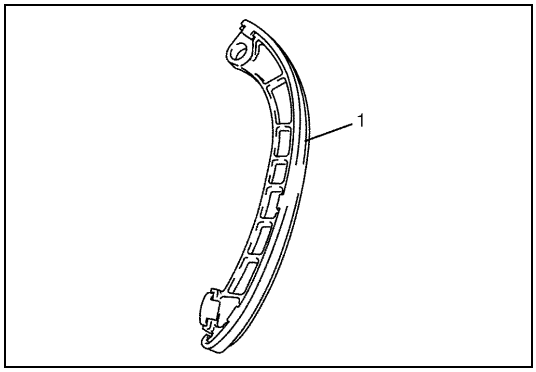

Timing chain tensioner

- Check shoe (1) for wear or damage.

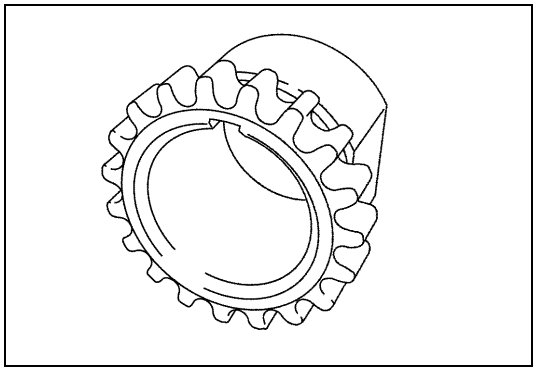

Crankshaft timing sprocket

- Check teeth of sprocket for wear or damage.

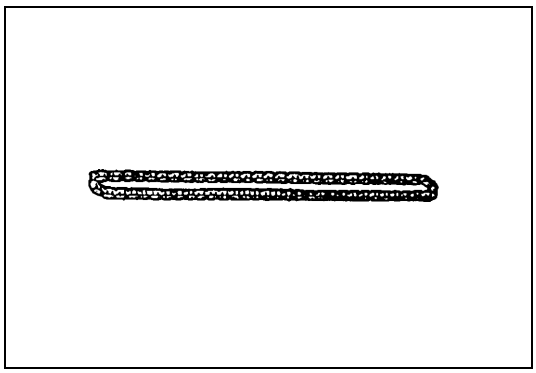

Timing chain

- Check timing chain for wear or damage.

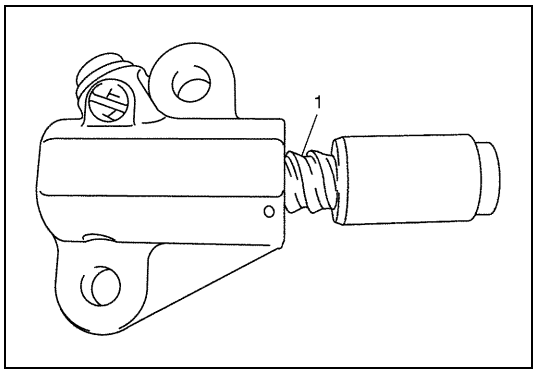

Timing chain tensioner adjuster

- Check that tooth surface (1) are free from damage.

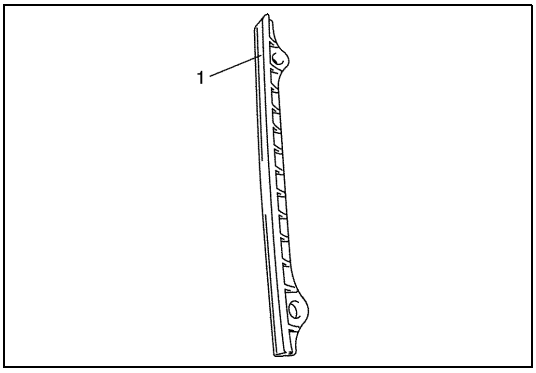

Timing chain No.1 guide

- Check shoe (1) for wear or damage.

INSTALLATION

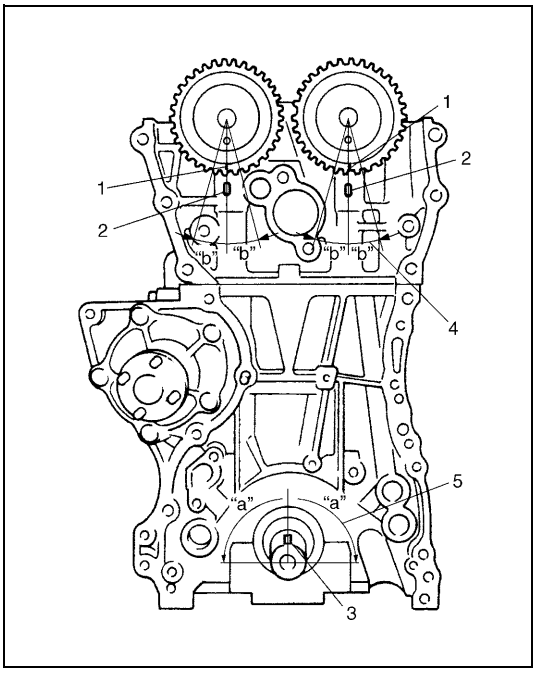

CAUTION:

After timing chain is removed, never turn crankshaft and camshafts independently more than such an extent ("a", "b") as shown in figure.

If turned, interference may occur between piston and valves and valves themselves, and parts related to piston and valves may be damaged.

1) Check that match marks (1) on intake and exhaust camshaft timing sprockets are in match with notches (2) on cylinder head as shown in figure.
2) Set key (3) and turn crankshaft to position key on upside of crankshaft.

"a" : 90°	4. Camshaft (IN and EX) allowable turning range. By marks on camshaft timing sprocket within 15° from notches on cylinder head on both right and left.
"b" : 15°	5. Crankshaft allowable turning range. By key on crankshaft, within 90° from top on both right and left.

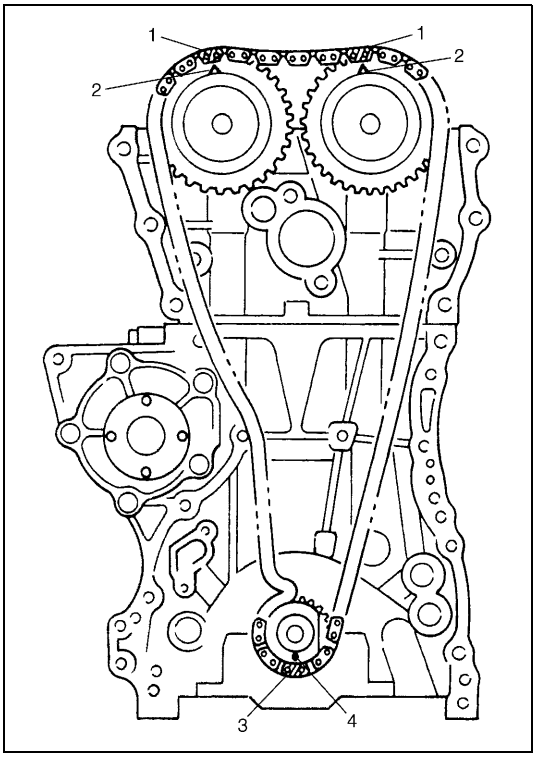

3) Install timing chain by aligning dark blue plate (1) of timing chain and triangle mark (2) on camshaft timing sprocket as shown in figure.
4) Fit crankshaft timing sprocket to timing chain by aligning gold plate (3) of timing chain and mark (4) on crankshaft timing sprocket. Then install crankshaft timing sprocket fitted with chain to crankshaft.

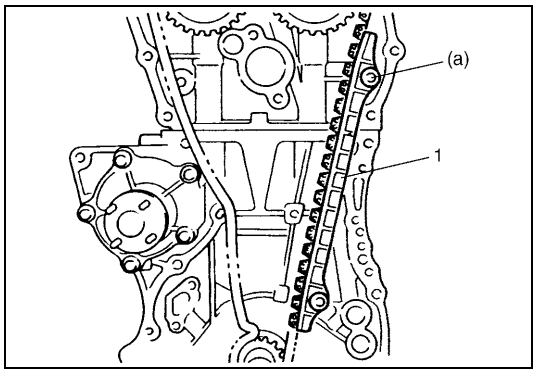

5) Apply engine oil to sliding surface of timing chain No.1 guide (1) and install it as shown in figure.
Tighten guide bolts to specified torque.

Tightening torque
Timing chain No.1 guide bolt
(a) : 9 N·m (0.9 kg-m, 6.5 lb-ft)

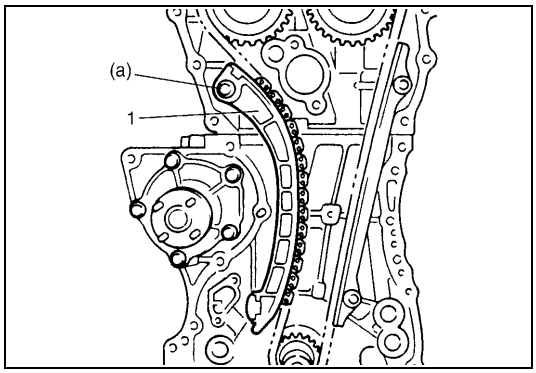

6) Apply engine oil to sliding surface of chain tensioner (1) and install chain tensioner and spacer.
Tighten tensioner bolt to specified torque

Tightening torque
Timing chain tensioner bolt
(a) : 22 N·m (2.2 kg-m, 16.0 lb-ft)

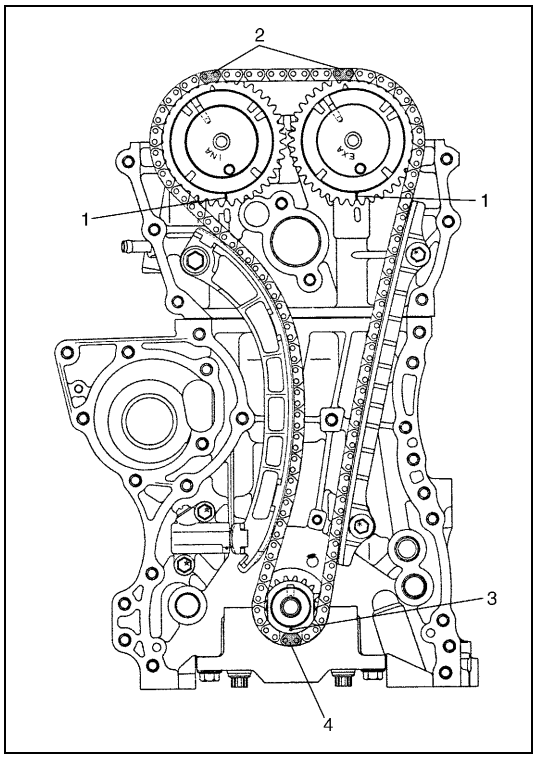

7) Check that match marks (1) on intake and exhaust camshaft timing sprockets are in match with making timing chain (2) and match mark on crankshaft timing sprocket (3) are in with marking timing chain(4).

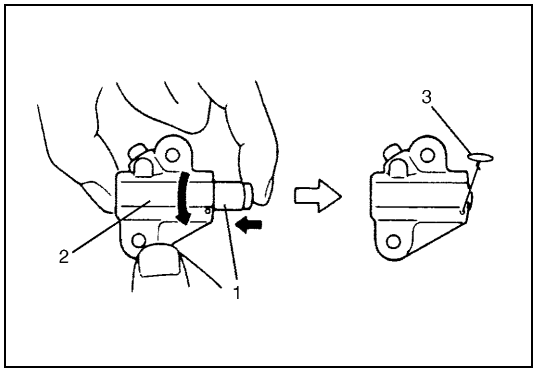

8) Screw in plunger (1) by turning body (2) in arrow direction and install a retainer (3) (wire) to hold plunger in place.

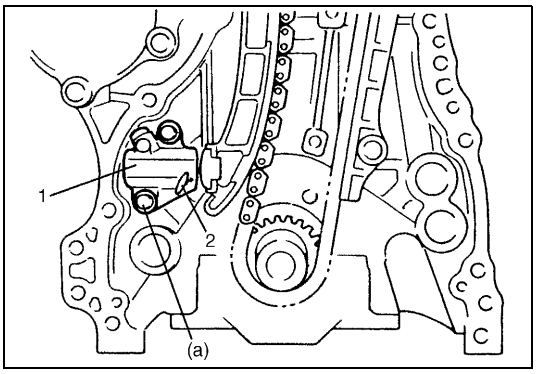

9) Install timing chain tensioner adjuster assembly (1) with a retainer (2).
   Tighten adjuster bolts to specified torque and then remove a retainer from chain tensioner adjuster assembly.

Tightening torque
Timing chain tensioner adjuster bolts
(a) : 11 N·m (1.1 kg-m, 8.0 lb-ft)

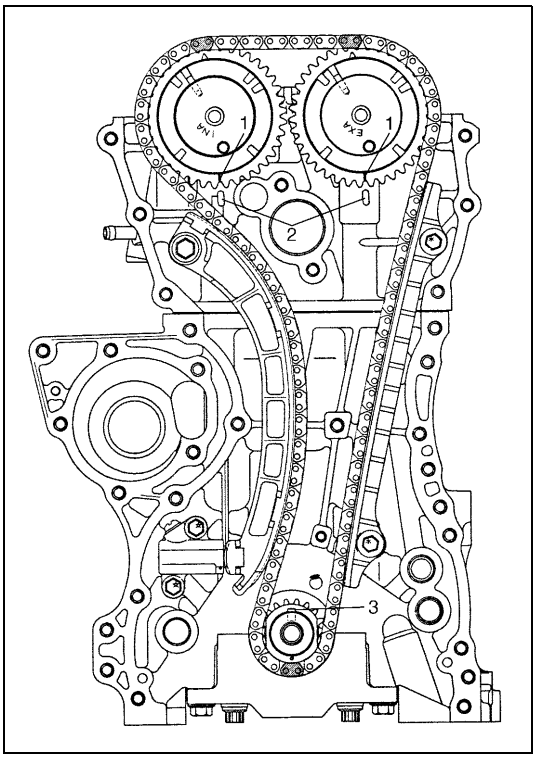

10) Apply engine oil to timing chain and then turn crankshaft clockwise by 2 revolutions and check that match marks (1) on intake and exhaust camshaft timing sprockets are in match with notches (2) on cylinder head and key (3) is on upside of crankshaft as shown in figure.
    If each marking chain and each match mark are no matches, adjust each sprockets and timing chain.

11) Install timing chain cover referring to “TIMING CHAIN COVER”.
12) Install cylinder head cover referring to “CYLINDER HEAD COVER”.
13) Install oil pan referring to “OIL PAN AND OIL PUMP STRAINER”.
14) Adjust water pump belt tension referring to Section 6B.
15) Adjust A/C compressor belt tension (if equipped) referring to Section 1B.
16) Refill engine with engine oil.
17) Verify that there is no oil leakage and exhaust gas leakage at each connection.

CAMSHAFT, TAPPET AND SHIM

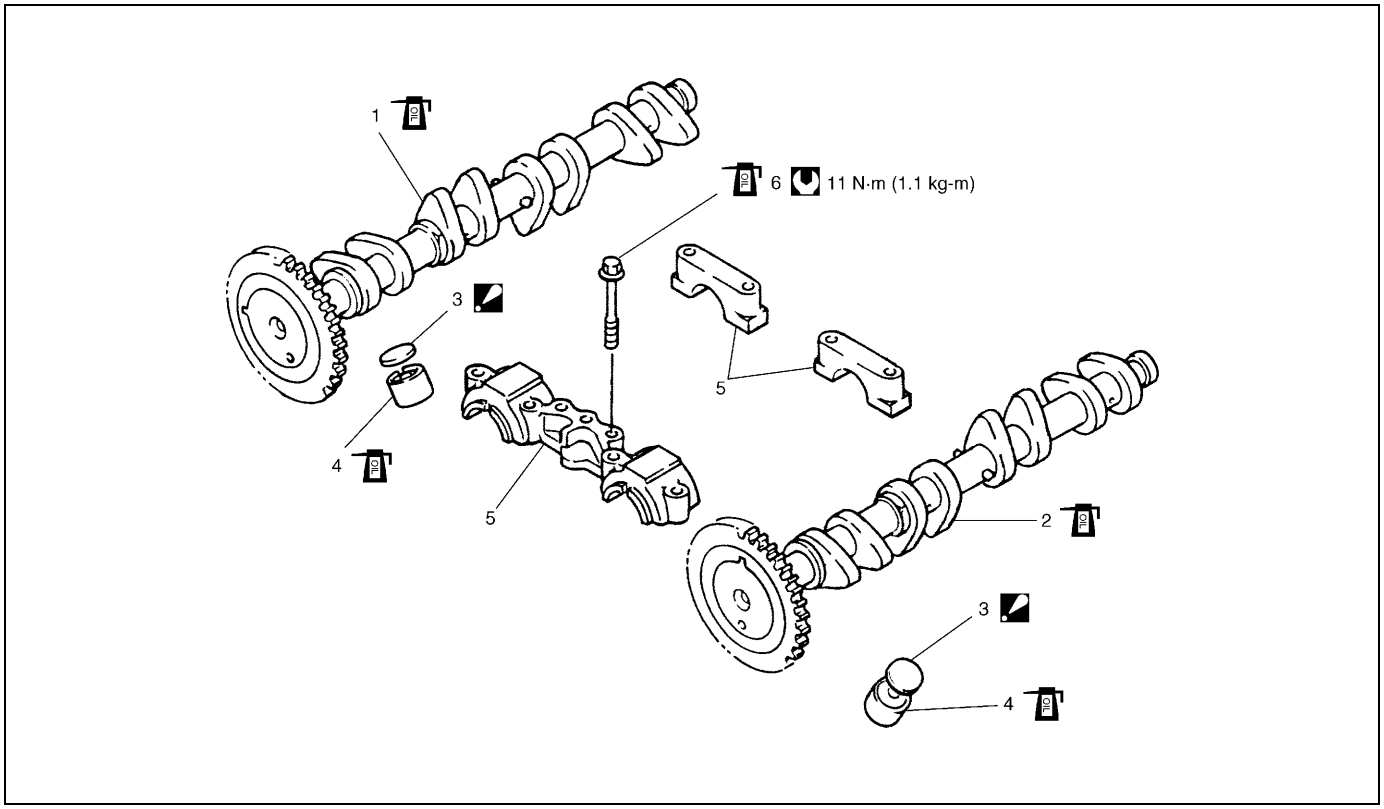

	1. Intake camshaft	4. Tappet	Tightening torque
	2. Exhaust camshaft	5. Camshaft housing	Apply engine oil to sliding surface of each part.
	3. Shim : Shim No. on it faces tappet side.	6. Camshaft housing bolt	

REMOVAL

1) Remove cylinder head cover and oil pan as previously outlined.
2) Remove timing chain cover referring to “TIMING CHAIN COVER”.
3) Remove timing chain referring to “TIMING CHAIN AND CHAIN TENSIONER”.

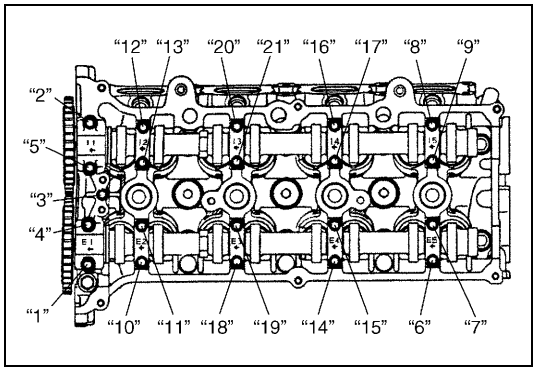

4) Loosen camshaft housing bolts in such order as indicated in figure and remove them.
5) Remove camshaft housings.
6) Remove intake and exhaust camshafts.

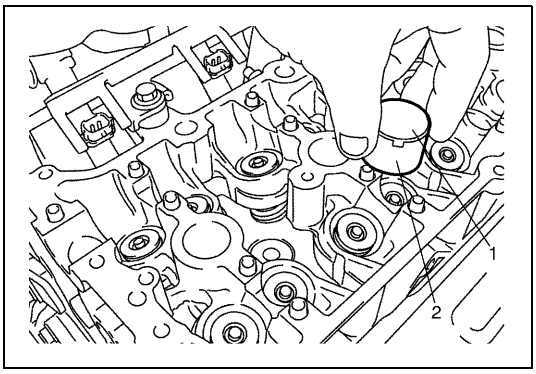

7) Remove tappets (2) with shims (1).

INSPECTION

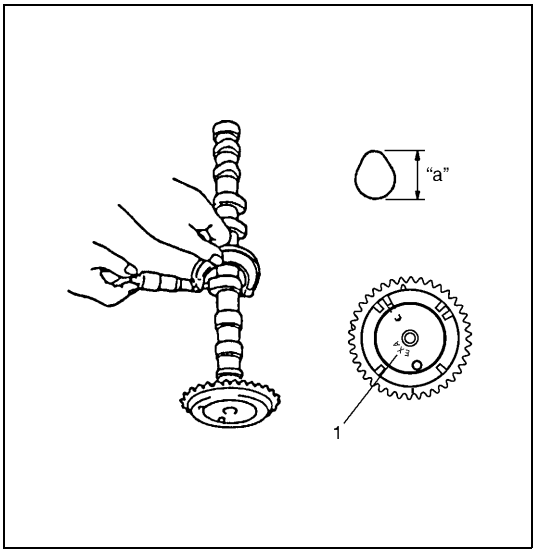

Cam Wear

Using a micrometer, measure cam height "a". If measured height is below its limit, replace camshaft.

Cam height "a" of camshaft

	Standard	Limit
Intake cam	**44.919 – 45.089 mm (1.768 – 1.775 in.)**	**44.81 mm (1.764 in.)**
Exhaust cam (ID mark (1) on sprocket: EXA)	**44.202 – 44.362 mm (1.740 – 1.747 in.)**	**44.08 mm (1.735 in.)**
Exhaust cam (ID mark (1) on sprocket: EXB)	**44.399 – 44.559 mm (1.748 – 1.754 in.)**	**44.28 mm (1.743 in.)**

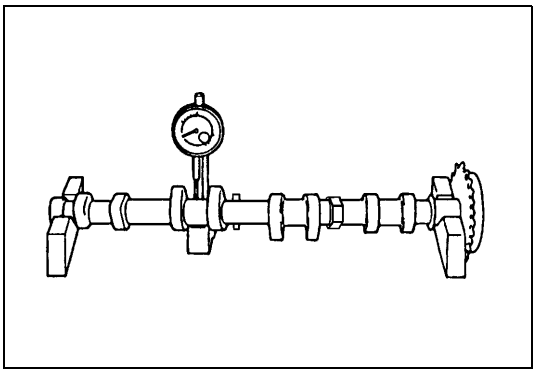

Camshaft Runout

Set camshaft between two "V" blocks, and measure its runout by using a dial gauge.
If measured runout exceeds below limit, replace camshaft.

Camshaft runout limit
: 0.10 mm (0.0039 in.)

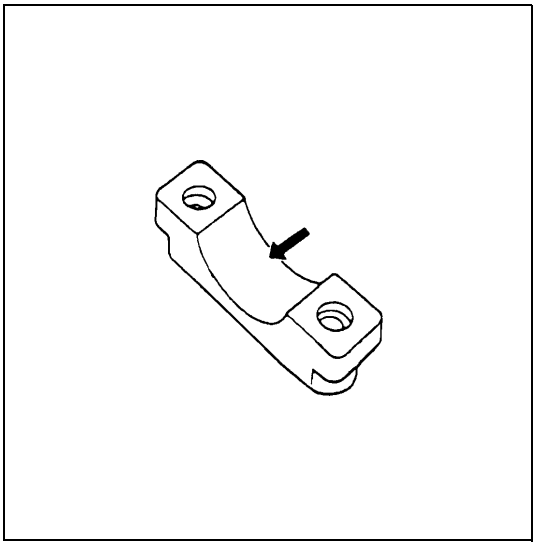

Camshaft Journal Wear

Check camshaft journals and camshaft housings for pitting, scratches, wear or damage.
If any malcondition is found, replace camshaft or cylinder head with housing. Never replace cylinder head without replacing housings.
Check clearance by using gaging plastic. Checking procedure is as follows.

1) Clean housings and camshaft journals.
2) Remove all tappets with shims.
3) Install camshafts to cylinder head.
4) Place a piece of gaging plastic to full width of journal of camshaft (parallel to camshaft).
5) Install camshaft housing.

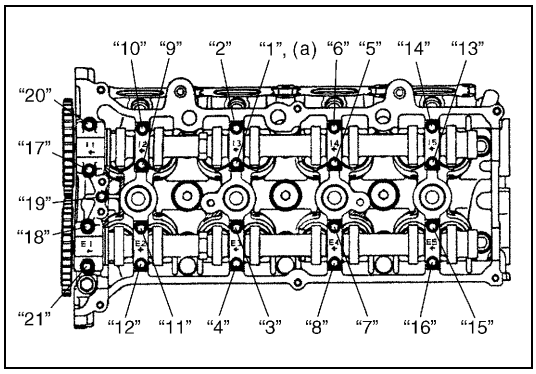

6) Tighten camshaft housing bolts in such order as indicated in figure a little at a time till they are tightened to specified torque.

NOTE:

Do not rotate camshaft while gaging plastic is installed.

Tightening torque
Camshaft housing bolts (a) : 11 N·m (1.1 kg-m, 8.0 lb-ft)

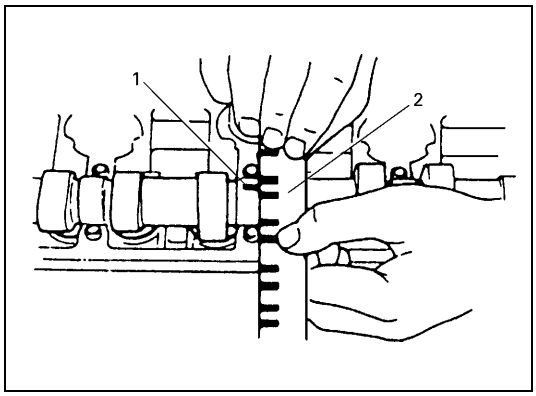

7) Remove housing, and using scale (2) on gaging plastic (1) envelop, measure gaging plastic width at its widest point.

Camshaft journal clearance

	Standard	Limit
Intake No.1	**0.020 – 0.072 mm (0.0008 – 0.0028 in.)**	**0.12 mm**
Other	**0.045 – 0.087 mm (0.0018 – 0.0034 in.)**	

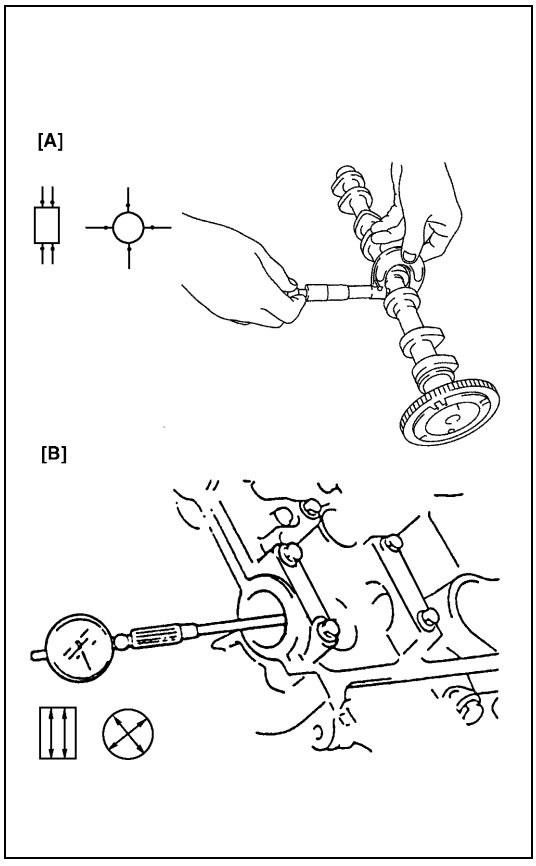

If measured camshaft journal clearance exceeds limit, measure journal (housing) bore and outside diameter of camshaft journal. Replace camshaft or cylinder head assembly whichever the difference from specification is greater.

Camshaft journal diameter [A]

Item	Standard
Intake No.1	**26.940 – 26.955 mm (1.0606 – 1.0612 in.)**
Exhaust No.1	**26.934 – 26.955 mm (1.0604 – 1.0612 in.)**
Other	**22.934 – 22.955 mm (0.9029 – 0.9037 in.)**

Camshaft journal bearing bore [B]

Item	Standard
Exhaust No.1	**27.000 – 27.021 mm (1.0630 – 1.0638 in.)**
Other	**23.000 – 23.021 mm (0.9055 – 0.9063 in.)**

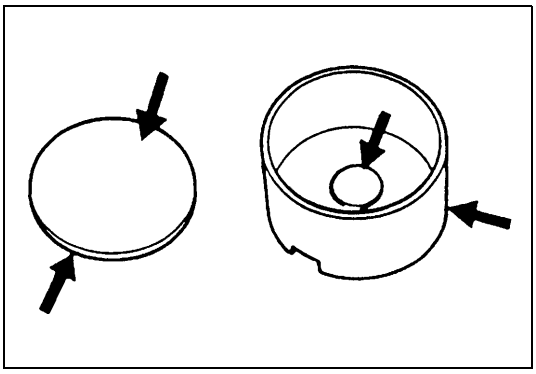

Wear of tappet and shim

Check tappet and shim for pitting, scratches or damage.
If any malcondition is found, replace.

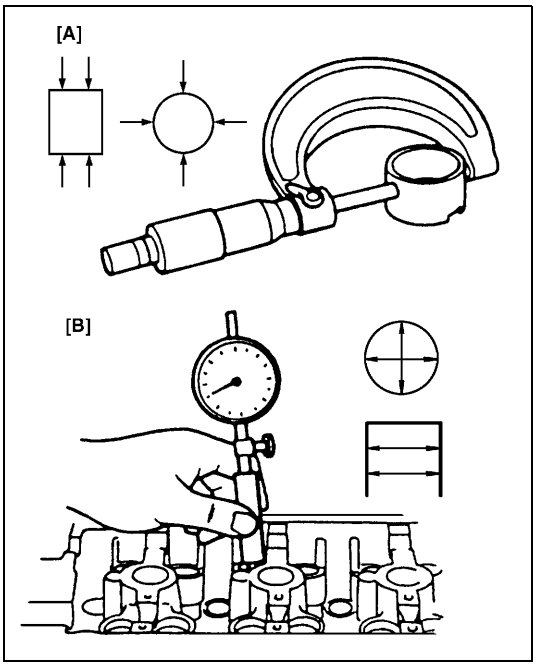

Measure cylinder head bore and tappet outside diameter to determine cylinder head-to-tappet clearance. If clearance exceeds limit, replace tappet or cylinder head.

Cylinder head to tappet clearance
Standard : 0.025 – 0.066 mm (0.0010 – 0.0026 in.)
Limit : 0.15 mm (0.0059 in.)

Tappet outside diameter [A]
Standard : 30.959 – 30.975 mm (1.2189 – 1.2195 in.)

Cylinder head tappet bore [B]
Standard : 31.000 – 31.025 mm (1.2205 – 1.2215 in.)

INSTALLATION

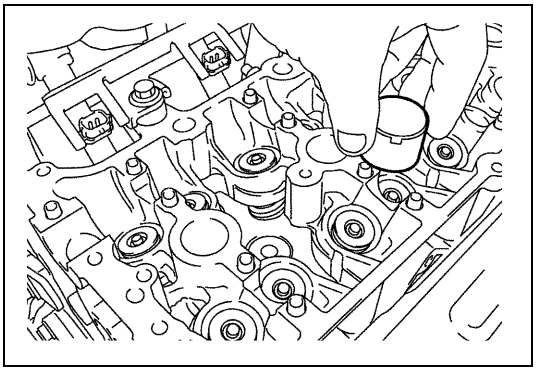

1) Install tappets and shims to cylinder head.
   Apply engine oil around tappet and then install it to cylinder head.

NOTE:

When installing shim, make sure to direct shim No. side toward tappet.

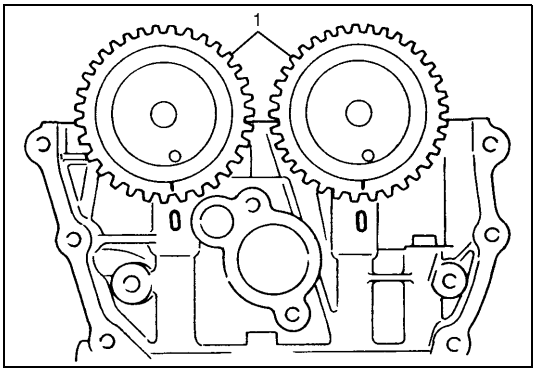

2) Install camshafts (1).

NOTE:

Before installing camshafts, turn crankshaft until key position faces upward. Refer to "TIMING CHAIN AND CHAIN TENSIONER".

Apply engine oil to sliding surface of each camshaft and camshaft journal then install them as shown in figure.

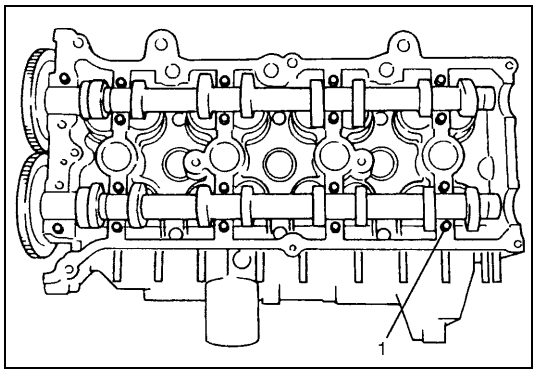

3) Install camshaft housing pins (1) as shown in figure.

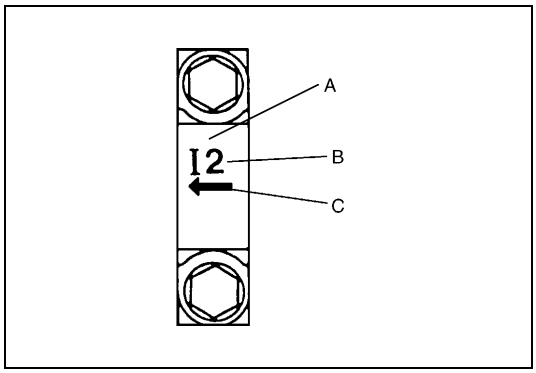

4) Check position of camshaft housings.
   Embossed marks are provided on each camshaft housing, indicating position and direction for installation. Install housings as indicated by these marks.

A.	I : Intake side or E : Exhaust side
B.	Position from timing chain side
C.	Pointing to timing chain side

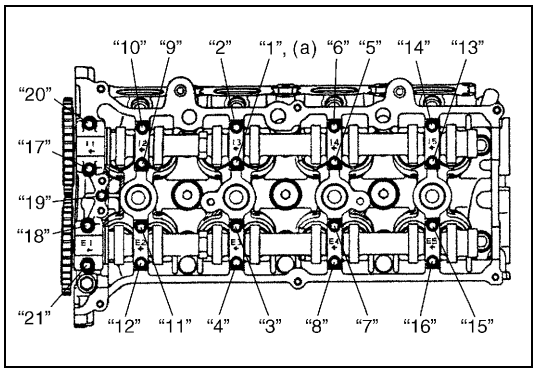

5) After applying engine oil to housing bolts, tighten them temporarily first. Then tighten them by the following numerical order in figure. Tighten a little at a time and evenly among bolts and repeat tightening sequence two or three times before they are tightened to specified torque.

Tightening torque
Camshaft housing bolts (a) : 11 N·m (1.1 kg-m, 8.0 lb-ft)

6) Install timing chain with crankshaft sprocket referring to "TIMING CHAIN AND CHAIN TENSIONER".
7) Install timing chain cover referring to "TIMING CHAIN COVER".
8) Check valve lashes as previously outlined.
9) Install cylinder head cover and oil pan as previously outlined.
10) Adjust water pump belt tension referring to Section 6B.
11) Adjust A/C compressor belt tension (if equipped) referring to Section 1B.
12) Refill engine with engine oil.
13) Verify that there is no, oil leakage and exhaust gas leakage at each connection.

VALVES AND CYLINDER HEAD

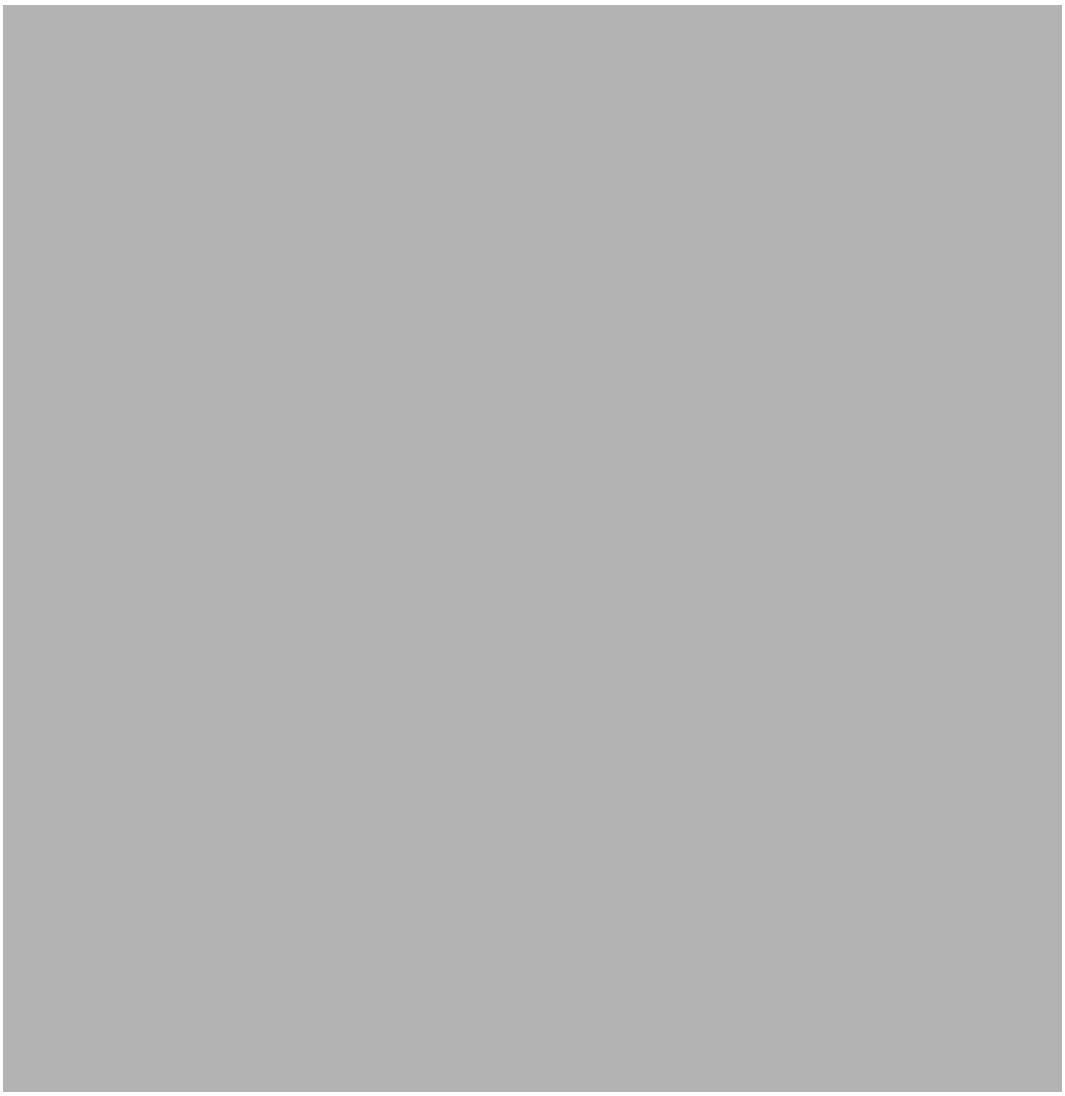

[A]✱ 1) Tighten all bolts at 40 N·m (4.0 kg-m) 2) Turn all bolts at 60° 3) Then, Turn all bolt at 60° once again	6. Intake valve	12. Knock pin
1. Valve cotters	7. Exhaust valve	Tightening torque
2. Valve spring retainer	8. Valve guide	Do not reuse.
3. Valve spring	9. Cylinder head bolt : Never reuse it due to plastic deformation tightening bolt.	Apply engine oil to sliding surface of each part.
4. Valve stem seal	10. Cylinder head	
5. Valve spring seat	11. Cylinder head gasket : "TOP" mark provided on gasket comes to crankshaft pulley side, facing up.	

REMOVAL

1) Relieve fuel pressure according to procedure described in Section 6.
2) Disconnect negative cable at battery.
3) Drain engine oil.

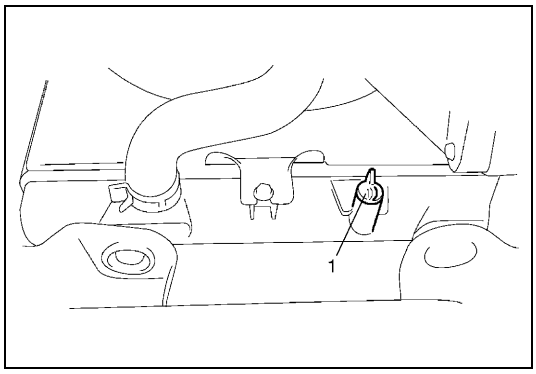

4) Drain coolant by loosening drain plug (1).

WARNING:

To help avoid danger of being burned, do not remove drain plug (1) and radiator cap while engine and radiator are still hot. Scalding fluid and steam can be blown out under pressure if plug and cap are taken off too soon.

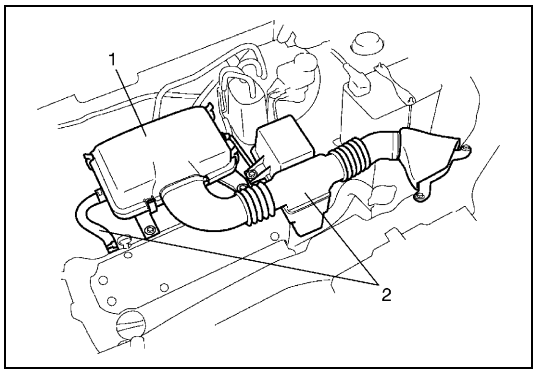

5) Remove air cleaner assembly (1), resonator and hoses (2) referring to “AIR CLEANER ASSEMBLY AND RESONATOR”.

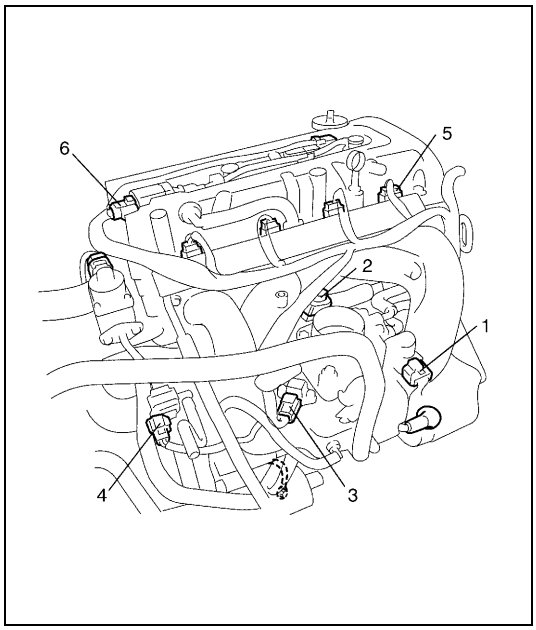

6) Disconnect the following electric lead wires :
   - EGR valve (if equipped)
   - IAC valve (1)
   - TP sensor (2)
   - MAP sensor (3)
   - CMP sensor
   - ECT sensor
   - EVAP canister purge valve (4)
   - Injectors (5)
   - Ignition coils
   - Heated oxygen sensors
   - Ground terminal from exhaust manifold
   - Each wire harness clamps
7) Remove heated oxygen sensor bracket from timing chain cover and detach heated oxygen sensor couplers from its bracket.

8) Disconnect accelerator cable from throttle body.

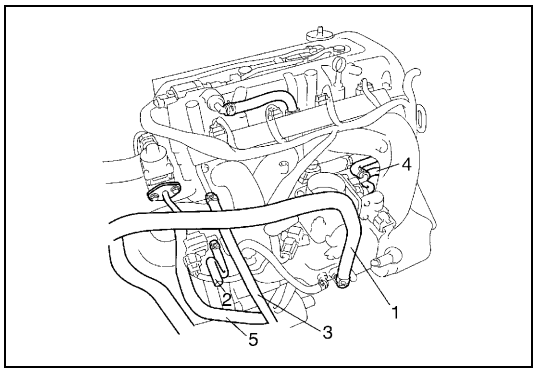

9) Disconnect the following hoses :
   - Brake booster hose (1) from intake manifold
   - Canister purge hose (2) from EVAP canister purge valve
   - Fuel feed and return hose (3) from each pipe
   - Water hose (4) from thermostat case
   - Heater inlet hose (5) from its pipe

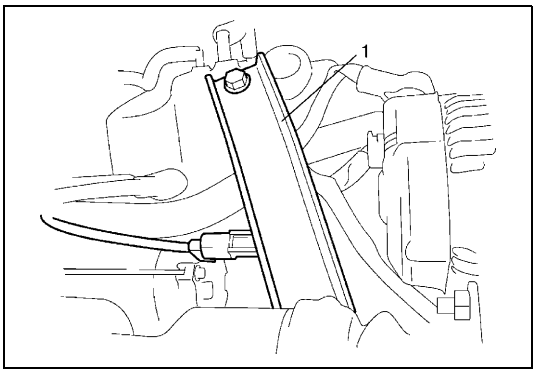

10) Remove intake manifold stiffener (1).

11) Remove oil pan referring to “OIL PAN AND OIL PUMP STRAINER”.
12) Remove cylinder head cover referring to “CYLINDER HEAD COVER”.
13) Remove timing chain cover referring to “TIMING CHAIN COVER”.
14) Remove timing chain referring to “TIMING CHAIN AND CHAIN TENSIONER”.
15) Remove intake and exhaust camshafts referring to “CAMSHAFT, TAPPET AND SHIM”.

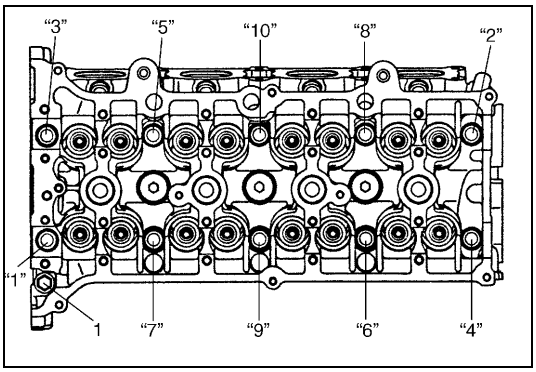

16) Loosen cylinder head bolts in such order as indicated in figure by using a 12 corner socket wrenches and remove them.

NOTE:

- **Don’t forget to remove bolt (M8) (1) as shown in figure.**
- **Never reuse cylinder head bolts once disassembled it due to plastic deformation tightening. Be sure to use new cylinder head bolts when installing.**

17) Check all around cylinder head for any other parts required to be removed or disconnected and remove or disconnect whatever necessary.
18) Remove exhaust manifold, if necessary, referring to “EXHAUST MANIFOLD”.
19) Remove cylinder head with intake manifold and exhaust manifold. Use lifting device, if necessary.

DISASSEMBLY

1) For ease in servicing cylinder head, remove intake manifold, injectors and exhaust manifold from cylinder head.

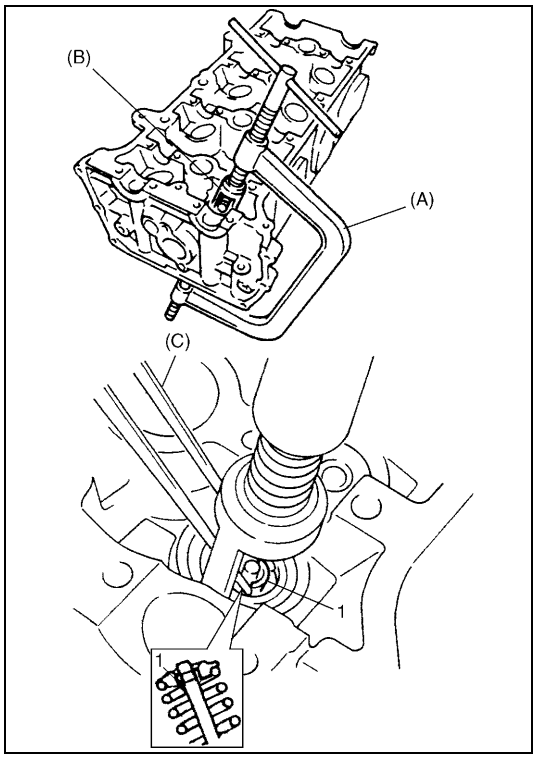

2) Using special tools (Valve lifter), compress valve spring and then remove valve cotters (1) by using special tool (Forceps).

Special tool
(A) : 09916-14510
(B) : 09916-14910
(C) : 09916-84511

3) Release special tool, and remove spring retainer and valve spring.
4) Remove valve from combustion chamber side.

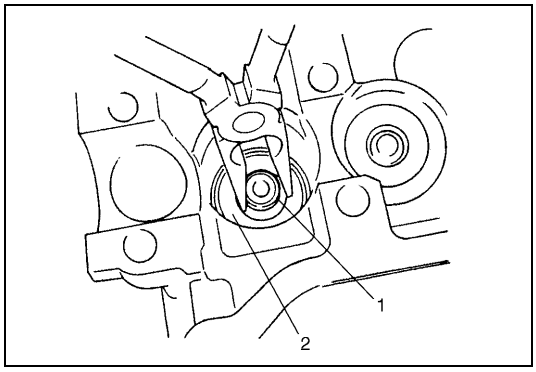

5) Remove valve stem seal (1) from valve guide, and then valve spring seat (2).

NOTE:

Do not reuse seal once disassembled. Be sure to use new oil seal when assembling.

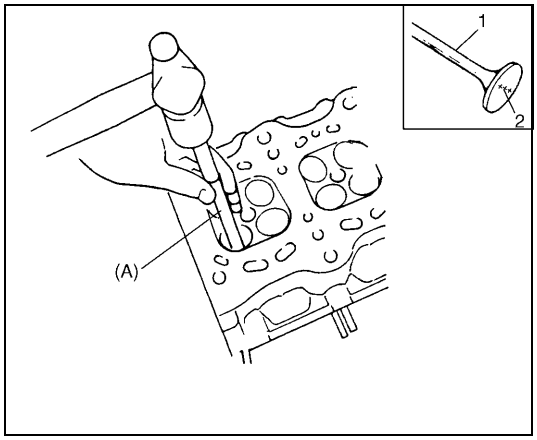

6) Using special tool (valve guide remover), drive valve guide out from combustion chamber side to valve spring side.

Special tool
(A) : 09916-46020 for engine equipped with 69G type valve
(A) : 09916-44910 for engine equipped with 54G type valve

NOTE:

Do not reuse valve guide once disassembled. Be sure to use new valve guide (Oversize) when assembling.

1. Valve
2. Emboss mark 54G or 69G

7) Place disassembled parts except valve stem seal and valve guide in order so that they can be installed in their original position.

INSPECTION

Valve Guides

[A]

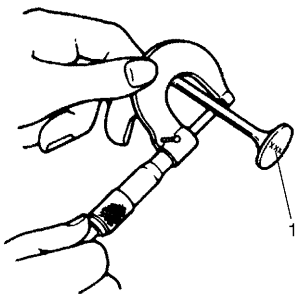

[B]

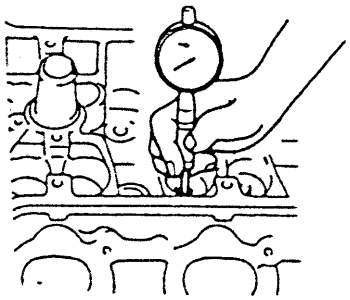

Using a micrometer and bore gauge, take diameter readings on valve stems and guides to check stem-to-guide clearance. Be sure to take reading at more than one place along the length of each stem and guide.
If clearance exceeds limit, replace valve and valve guide.

Valve stem-to-guide clearance

Valve type		Standard	Limit
69G	In	0.020 – 0.047 mm (0.0008 – 0.0019 in.)	0.07 mm (0.0028 in.)
	Ex	0.045 – 0.072 mm (0.0018 – 0.0028 in.)	0.09 mm (0.0035 in.)
54G	In	0.020 – 0.030 mm (0.0008 – 0.0012 in.)	0.05 mm (0.0017 in.)
	Ex	0.045 – 0.055 mm (0.0018 – 0.0022 in.)	0.07 mm (0.0028 in.)

Valve stem diameter [A]

Valve type		Standard
69G	In	5.965 – 5.980 mm (0.2348 – 0.2354 in.)
	Ex	5.940 – 5.955 mm (0.2339 – 0.2344 in.)
54G	In	5.465 – 5.480 mm (0.2152 – 0.2157 in.)
	Ex	5.440 – 5.455 mm (0.2142 – 0.2148 in.)

Valve guide bore [B] standard
In and Ex : 6.000 – 6.012 mm (0.2362 – 0.2367 in.) for 69G type valve
In and Ex : 5.485 – 5.510 mm (0.2159 – 0.2169 in.) for 54G type valve

1. Emboss mark 54G or 69G

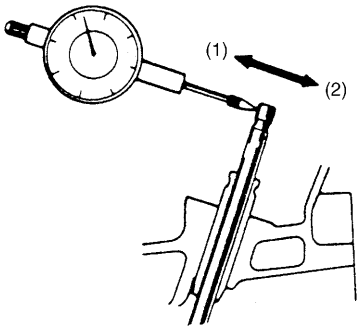

If bore gauge is not available, check end deflection of valve stem with a dial gauge instead.
Move stem end in directions (1) and (2) to measure end deflection.
If deflection exceeds its limit, replace valve stem and valve guide.

Valve stem end deflection limit
In : 0.14 mm (0.005 in.)
Ex : 0.18 mm (0.007 in.)

Valves

- Remove all carbon from valves.
- Inspect each valve for wear, burn or distortion at its face and stem end, as necessary, replace it.

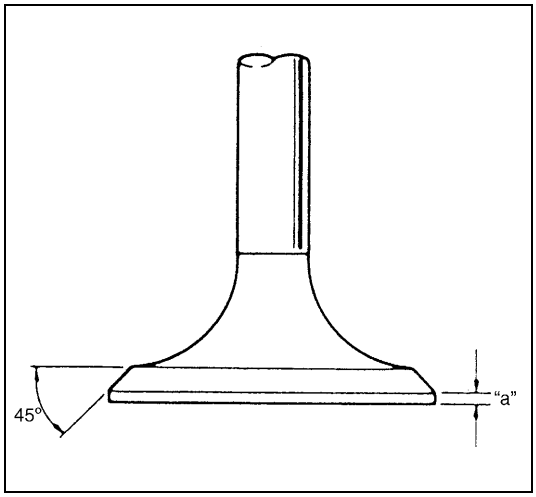

- Measure thickness "a" of valve head. If measured thickness exceeds limit, replace valve.

Valve head thickness (In and Ex)
Standard : 1.22 – 1.55 mm (0.048 – 0.061 in.)
Limit : 0.9 mm (0.035 in.)

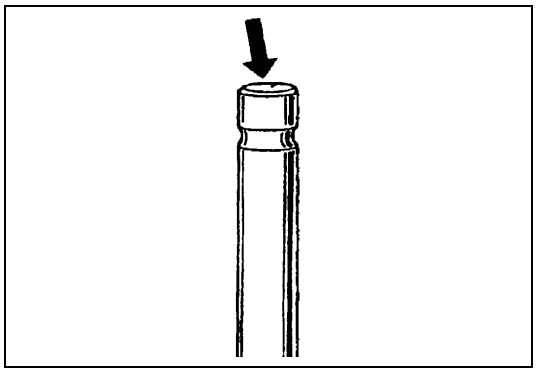

- Inspect valve stem end face for pitting and wear. If pitting or wear is found there, valve stem end may be resurfaced, but not too much to grind off its chamber. When it is worn out too much that its chamber is gone, replace valve.

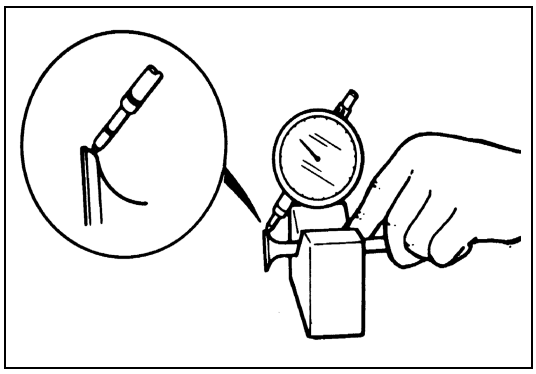

- Check each valve for radial runout with a dial gauge and "V" block. To check runout, rotate valve slowly. If runout exceeds its limit, replace valve.

Limit on valve head radial runout
: 0.08 mm (0.003 in.)

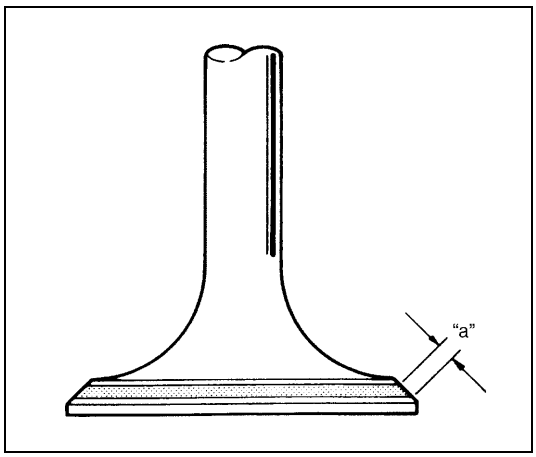

- Seating contact width:
  Create contact pattern on each valve in the usual manner, i.e. by giving uniform coat of marking compound to valve seat and by rotatingly tapping seat with valve head. Valve lapper (tool used in valve lapping) must be used.
  Pattern produced on seating face of valve must be a continuous ring without any break, and the width of pattern must be within specified range.

Standard seating width "a" revealed by contact pattern on valve face
In and Ex : 1.1 - 1.3 mm (0.0433 - 0.0512 in.)

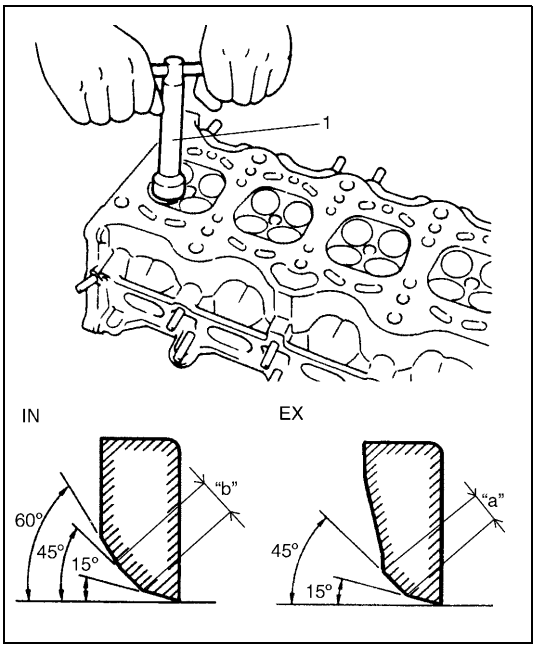

- Valve seat repair:
  A valve seat not producing a uniform contact with its valve or showing width of seating contact that is out of specified range must be repaired by regrinding or by cutting and regrinding and finished by lapping.

a) EXHAUST VALVE SEAT : Use valve seat cutters (1) to make two cuts as illustrated in figure. Two cutters must be used: the first for making 15° angle, and the second for making 45° angle. The second cut must be made to produce desired seat width.

Seat width for exhaust valve seat
"a" : 1.1 – 1.3 mm (0.0433 – 0.0512 in.)

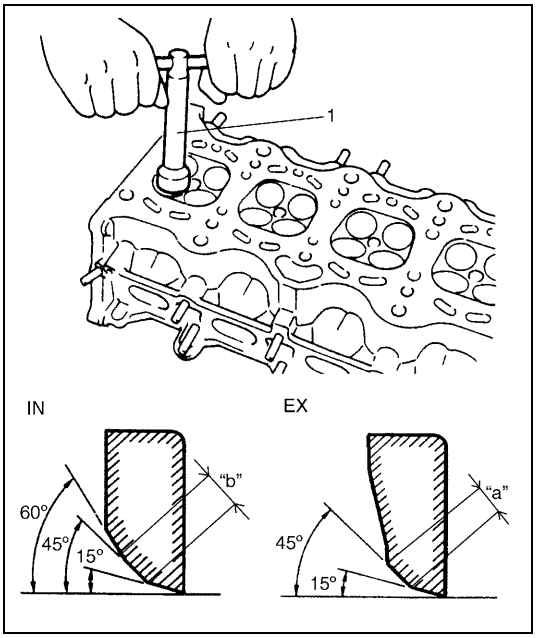

b) INTAKE VALVE SEAT : Use valve seat cutters to make three cuts as illustrated in figure. Three cutters must be used: the 1st for making 15° angle, the 2nd for making 60° angle, and 3rd for making 45° angle. The 3rd cut (45°) must be made to produce desired seat width.

Seat width for intake valve seat
"b" : 1.1 – 1.3 mm (0.0433 – 0.0512 in.)

c) VALVE LAPPING : Lap valve on seat in two steps, first with coarse size lapping compound applied to face and the second with fine-size compound, each time using valve lapper according to usual lapping method.

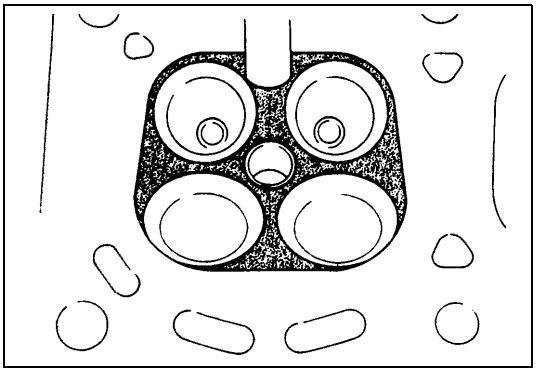

Cylinder Head

- Remove all carbon deposits from combustion chambers.

NOTE:

Do not use any sharp-edged tool to scrape off carbon deposits. Be careful not to scuff or nick metal surfaces when decarbonizing. The same applies to valves and valve seats, too.

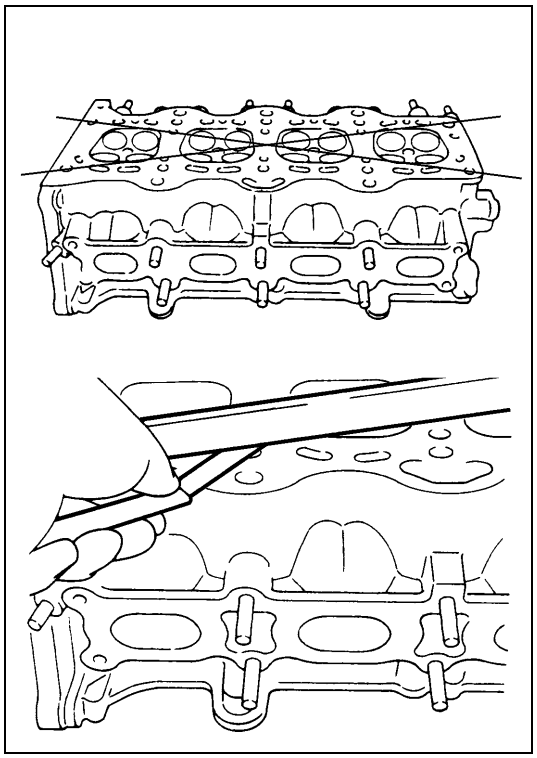

- Check cylinder head for cracks on intake and exhaust ports, combustion chambers, and head surface.
  Using a straightedge and thickness gauge, check flatness of gasketed surface at a total of 2 locations. If distortion limit, given below, is exceeded, correct gasketed surface with a surface plate and abrasive paper of about #400 (Waterproof silicon carbide abrasive paper): place abrasive paper on and over surface plate, and rub gasketed surface against paper to grind off high spots. Should this fail to reduce thickness gauge readings to within limit, replace cylinder head.
  Leakage of combustion gases from this gasketed joint is often due to warped gasketed surface: such leakage results in reduced power output.

Limit of distortion for cylinder head surface on piston side
: 0.03 mm (0.001 in.)

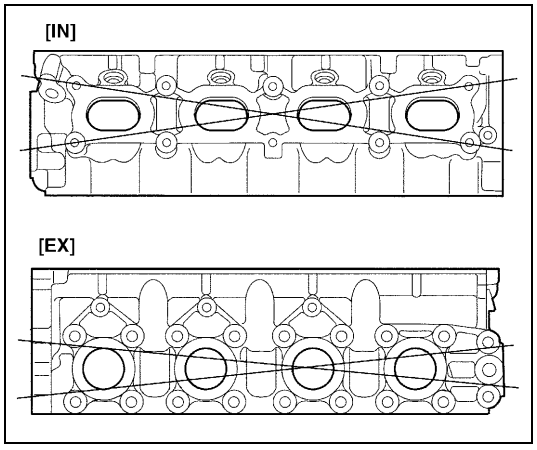

- Distortion of manifold seating faces:
  Check seating faces of cylinder head for manifolds, using a straightedge and thickness gauge, in order to determine whether these faces should be corrected or cylinder head replaced.

Limit of distortion for cylinder head surface on intake and exhaust manifold
: 0.05 mm (0.002 in.)

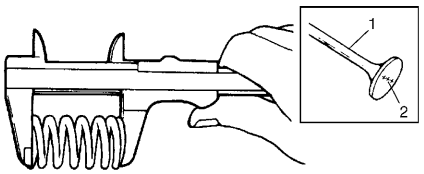

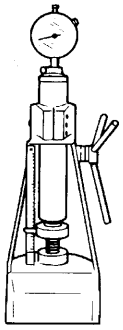

Valve Springs

- Referring to data given below, check to be sure that each spring is in sound condition, free of any evidence of breakage or weakening. Remember, weakened valve springs can cause chatter, not to mention possibility of reducing power output due to gas leakage caused by decreased seating pressure.

Valve spring free length for engine equipped with 69G type valve
Standard : 43.00 mm (1.693 in.)
Limit : 42.00 mm (1.652 in.)

Valve spring free length for engine equipped with 54G type valve
Standard : 36.83 mm (1.450 in.)
Limit : 35.83 mm (1.410 in.)

Valve spring preload for engine equipped with 69G type valve
Standard : 110 – 126 N (11.2 – 12.8 kg) for 39.50 mm (24.7 – 28.2 lb/1.555 in.)
Limit : 105 N (10.7 kg) for 39.5 mm (23.6 lb/1.555 in.)

Valve spring preload for engine equipped with 54G type valve
Standard : 107 – 125 N (10.7 – 12.5 kg) for 31.50 mm (23.6 – 27.6 lb/1.240 in.)
Limit : 102 N (10.4 kg) for 31.50 mm (22.9 lb/1.240 in.)

1. Valve
2. Emboss mark 54G or 69G

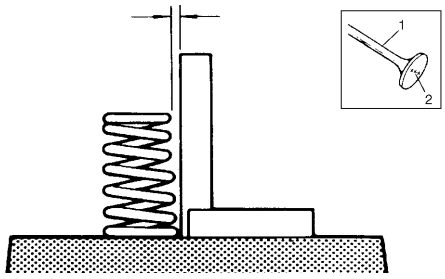

- Spring skewness:
  Use a square and surface plate to check each spring for skewness in terms of clearance between end of valve spring and square. Valve springs found to exhibit a larger clearance than limit given below must be replaced.

Valve spring skewness
Limit : 2.0 mm (0.079 in.) for engine equipped with 69G type valve
Limit : 1.6 mm (0.063 in.) for engine equipped with 54G type valve

1. Valve
2. Emboss mark 54G or 69G

ASSEMBLY

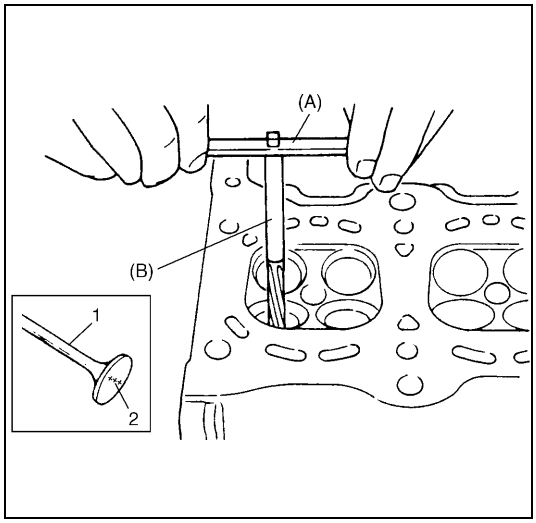

1) Before installing valve guide into cylinder head, ream guide hole with special tool (11 mm reamer for engine equipped with 69G type valve or 10.5 mm reamer for engine equipped with 54G type valve) so as to remove burrs and make it truly round.

Special tool
(A) : 09916-34542
(B) : 09916-38210 (11 mm) for engine equipped with 69G type valve
(B) : 09916-37320 (10.5 mm) for engine equipped with 54G type valve

1. Valve
2. Emboss mark 54G or 69G

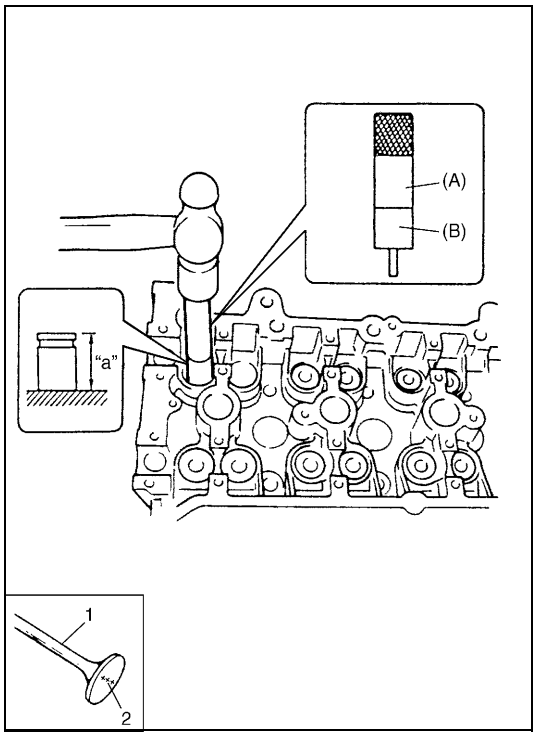

2) Install valve guide to cylinder head.
Heat cylinder head uniformly to a temperature of 80 to 100 °C (176 to 212 °F) so that head will not be distorted, and drive new valve guide into hole with special tools. Drive in new valve guide until special tool (Valve guide installer) contacts cylinder head.
After installing, make sure that valve guide protrudes by specified dimension "a" from cylinder head.

Special tool
(A) : 09916-57350 (For engine equipped with 69G type valve)
(A) : 09916-58210 (For engine equipped with 54G type valve)
(B) : 09917-88240 (For Intake side of engine equipped with 69G type valve)
(B) : 09917-88250 (For Exhaust side of engine equipped with 69G type valve)
(B) : 09916-56011 (For both sides of engine equipped with 54G type valve)

NOTE:

- **Never reuse once-disassembled valve guide. Make sure to install new valve guide.**
- **Intake and exhaust valve guides are identical.**

Specification for valve guide protrusion "a"
Intake side of engine equipped with 69G type valve : 17.5 mm (0.71 in.)
Exhaust side of engine equipped with 69G type valve : 14.5 mm (0.57 in.)
Both sides of engine equipped with 54G type valve : 11.1 – 11.5 mm (0.44 – 0.45 in.)

1. Valve
2. Emboss mark 54G or 69G

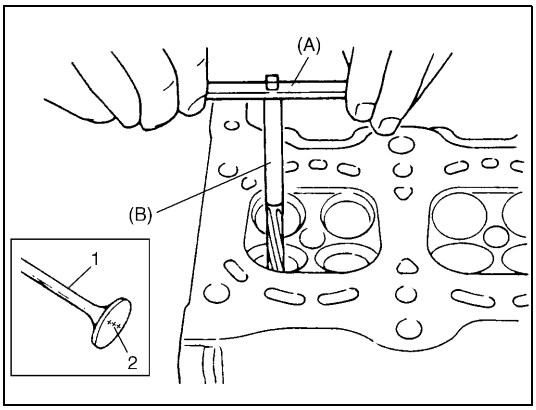

3) Ream valve guide bore with special tool (6.0 mm reamer for engine equipped with 69G type valve or 5.5 mm reamer for engine equipped with 54G type valve). After reaming, clean bore.

Special tool
(A) : 09916-34542
(B) : 09916-37810 (6 mm) for engine equipped with 69G type valve
(B) : 09916-34550 (5.5 mm) for engine equipped with 54G type valve

1.	Valve
2.	Emboss mark 54G or 69G

4) Install valve spring seat to cylinder head.

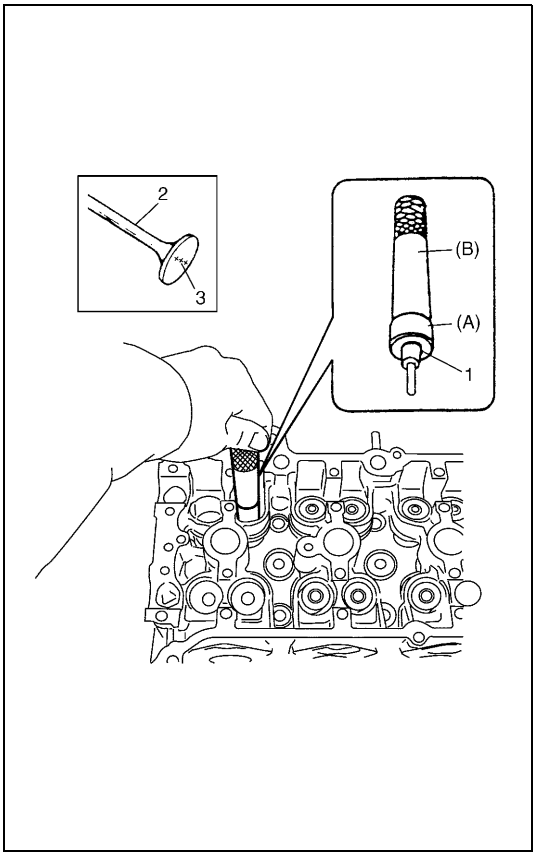

5) Install new valve stem seal (1) to valve guide.
After applying engine oil to seal and spindle of special tool (Valve guide installer handle), fit oil seal to spindle, and then install seal to valve guide by pushing special tool by hand.
After installing, check to be sure that seal is properly fixed to valve guide.

Special tool
(A) : 09917-98221
(B) : 09916-57350 (For engine equipped with 69G type valve)
(B) : 09916-58210 (For engine equipped with 54G type valve)

NOTE:

- **Do not reuse once-disassembled seal. Be sure to install new seal.**
- **When installing, never tap or hit special tool with a hammer or else. Install seal to guide only by pushing special tool by hand. Tapping or hitting special tool may cause damage to seal.**

2.	Valve
3.	Emboss mark 54G or 69G

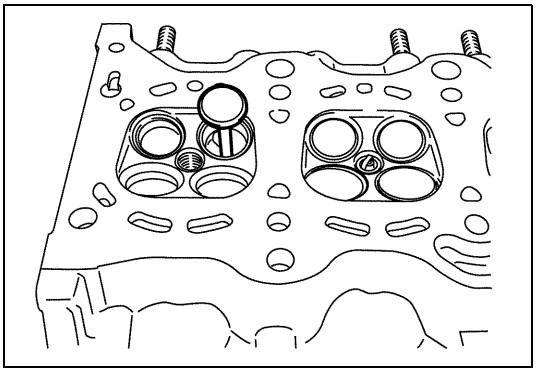

6) Install valve to valve guide.
Before installing valve to valve guide, apply engine oil to stem seal, valve guide bore and valve stem.

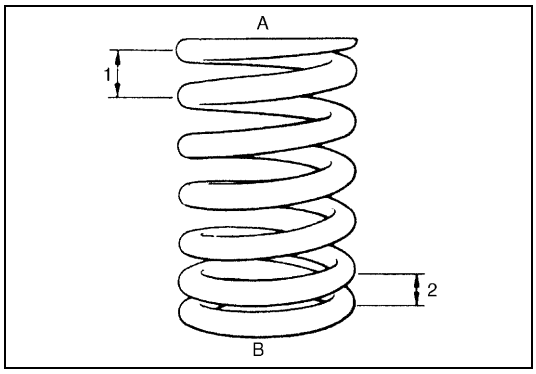

7) Install valve spring and spring retainer.
Each valve spring has top end (large-pitch end (1)) and bottom end (small-pitch end (2)). Be sure to position spring in place with its bottom end (small-pitch end) facing the bottom (valve spring seat side).

A :	Valve spring retainer side
B :	Valve spring seat side

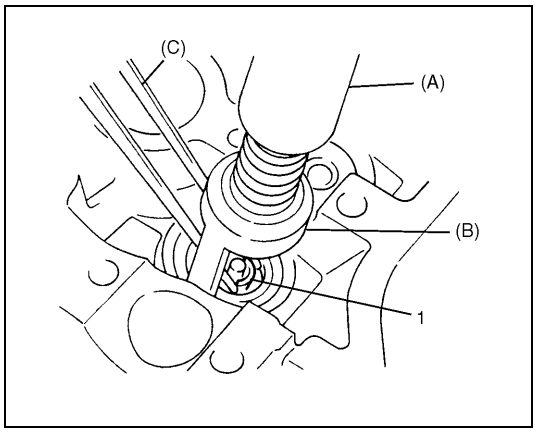

8) Using special tools (Valve lifter), compress valve spring and fit two valve cotters (1) into groove in valve stem.

Special tool
(A) : 09916-14510
(B) : 09916-14910
(C) : 09916-84511

NOTE:

When compressing the valve spring, be carefully to free from damage in inside face of tappet installing hole.

9) Install intake manifold, injectors and exhaust manifold to cylinder head.

INSTALLATION

1) Clean mating surface of cylinder head and cylinder block. Remove oil, old gasket and dust from mating surface.

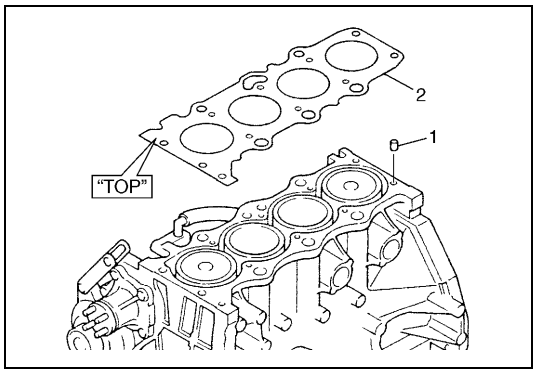

2) Install knock pins (1) to cylinder block.
3) Install new cylinder head gasket (2) to cylinder block.
"TOP" mark provided on gasket comes to crankshaft pulley side, facing up (toward cylinder head side).

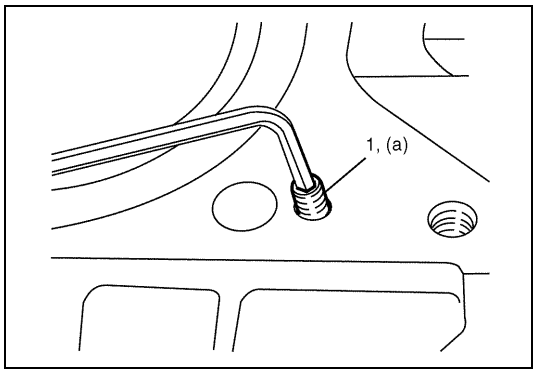

4) Make sure that oil jet (venturi plug) (1) is installed and if it is, that it is not clogged.
When installing it, be sure to tighten to specified torque.

Tightening torque
Venturi plug (a) : 5 N·m (0.5 kg-m, 3.5 lb-ft)

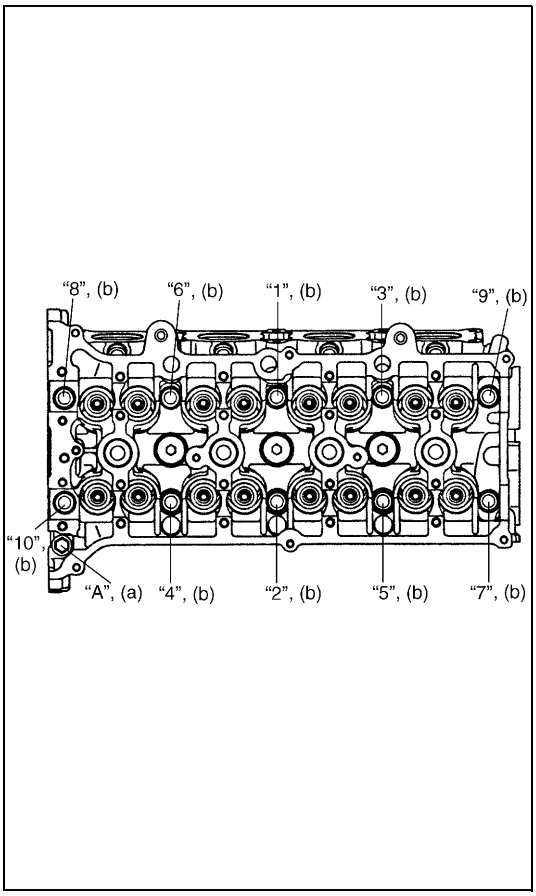

5) Install cylinder head to cylinder block.
   Apply engine oil to new cylinder head bolts and tighten them gradually as follows.
   a) Tighten cylinder head bolts ("1" – "10") to 20 N·m (2.0 kg-m, 14.5 lb-ft) according to numerical order as shown by using a 12 corner socket wrenches.
   b) In the same manner as in Step a), tighten them to 40 N·m (4.0 kg-m, 29.0 lb-ft).
   c) Turn all bolts 60° according to numerical order in figure.
   d) Repeat Step c).
   e) Tighten bolt "A" to specified torque.

NOTE:

- **Never reuse cylinder head bolts ("1" – "10") once disassembled it due to plastic deformation tightening. Be sure to use new cylinder head bolts.**
- **Be sure to tighten M8 bolt ("A") after securing the other bolt.**

Tightening torque
Cylinder head bolt for M8 (a) : 22 N·m (2.2 kg-m, 16.0 lb-ft)
Cylinder head bolts for M10
(b) : 40 N·m (4.0 kg-m, 29.0 lb-ft) and then turn to 60° twice

6) Install exhaust manifold stiffener and exhaust No.1 pipe referring to "EXHAUST MANIFOLD".
7) Install camshafts, timing chain and chain cover as previously outlined.
8) Install cylinder head cover and oil pan as previously outlined.
9) Install intake manifold stiffener and connect each hoses and electric lead wires securely.
10) Install air cleaner assembly, resonator and hoses referring to "AIR CLEANER ASSEMBLY AND RESONATOR".
11) Adjust water pump belt tension referring to Section 6B.
12) Adjust A/C compressor belt tension (if equipped) referring to Section 1B.
13) Adjust accelerator cable play referring to Section 6E1.
14) Check to ensure that all removed parts are back in place. Reinstall any necessary parts which have not been reinstalled.
15) Refill cooling system with coolant, engine with engine oil.
16) Connect negative cable at battery.
17) Verify that there is no fuel leakage, coolant leakage, oil leakage and exhaust gas leakage at each connection.

PISTONS, PISTON RINGS, CONNECTING RODS AND CYLINDERS

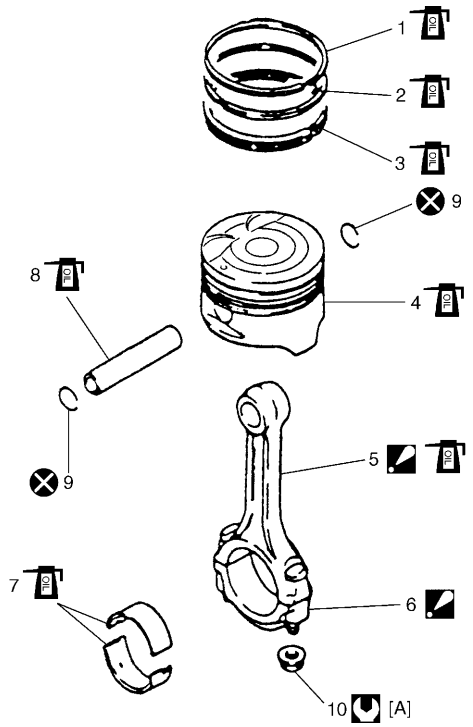

	[A] : 1) Tighten all nuts to 15 N·m (1.5 kg-m) 2) Turn all nuts to 45° 3) Then, Turn all nuts to 45° one again	7.	Connecting rod bearing
	1. Top ring	8.	Piston pin
	2. 2nd ring	9.	Piston pin circlip
	3. Oil ring	10.	Bearing cap nut
	4. Piston		Tightening torque
	5. Connecting rod : Apply engine oil to sliding surface except inner surface of big end, and rod bolts. Make sure rod bolt diameter when reuse it due to plastic deformation tightening. Refer to “INSPECTION” of “CONNECTING ROD”.		Apply engine oil to sliding surface of each parts.
	6. Connecting rod bearing cap : Point arrow mark on cap to crankshaft pulley side.		Do not reuse.

REMOVAL

1) Relieve fuel pressure according to procedure described in Section 6.
2) Disconnect negative cable at battery.
3) Drain engine oil.
4) Drain coolant.
5) Remove cylinder head referring to “VALVES AND CYLINDER HEAD”.
6) Mark cylinder number on all pistons, connecting rods and connecting rod caps using silver pencil or quick drying paint.
7) Remove rod bearing caps.

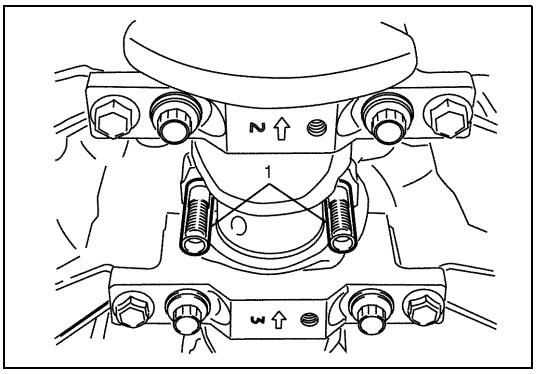

8) Install guide hose (1) over threads of rod bolts.
   This prevents damage to bearing journal and rod bolt threads when removing connecting rod.
9) Decarbonize top of cylinder bore before removing piston from cylinder.
10) Push piston and connecting rod assembly out through the top of cylinder bore.

DISASSEMBLY

1) Using piston ring expander, remove two compression rings (Top and 2nd) and oil ring from piston.
2) Remove piston pin from connecting rod.

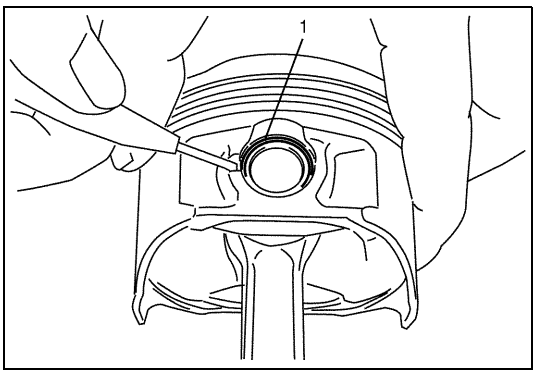

- Ease out piston pin circlips (1), as shown.

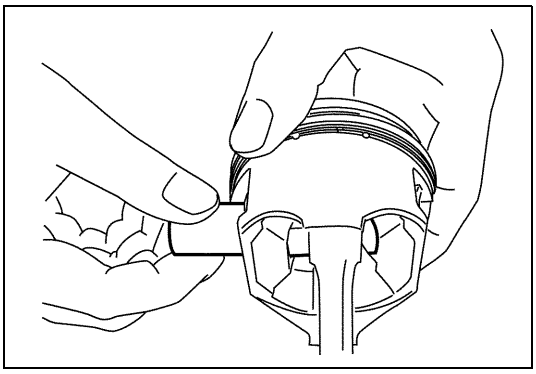

- Force piston pin out.

CLEANING

Decarbonize piston head and ring grooves, using a suitable tool.

INSPECTION

Cylinder

- Inspect cylinder walls for scratches, roughness or ridges which indicate excessive wear. If cylinder bore is very rough or deeply scratched or ridged, rebore cylinder and use oversize piston.

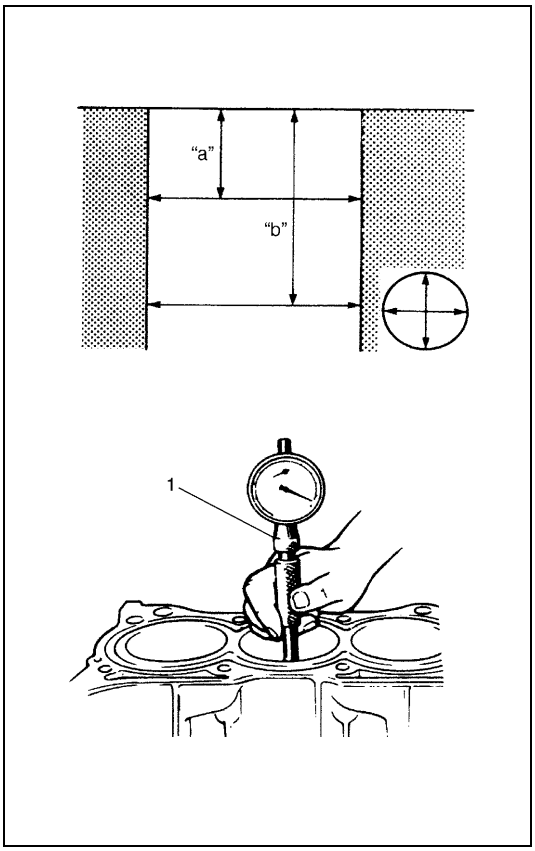

- Using a cylinder gauge (1), measure cylinder bore in thrust and axial directions at two positions ("a" and "b") as shown in figure.
  If any of the following conditions is noted, rebore cylinder.

1) Cylinder bore dia. exceeds limit.
2) Difference of measurements at two positions exceeds taper limit.
3) Difference between thrust and axial measurements exceeds out-of-round limit.

Cylinder bore diameter
Limit : 78.15 mm (3.077 in.)

Cylinder taper and out-of-round
Limit : 0.10 mm (0.004 in.)

"a" : 50 mm (1.96 in.)
"b" : 95 mm (3.74 in.)

NOTE:

If any one of four cylinders has to be rebored, rebore all four to the same next oversize. This is necessary for the sake of uniformity and balance.

Pistons

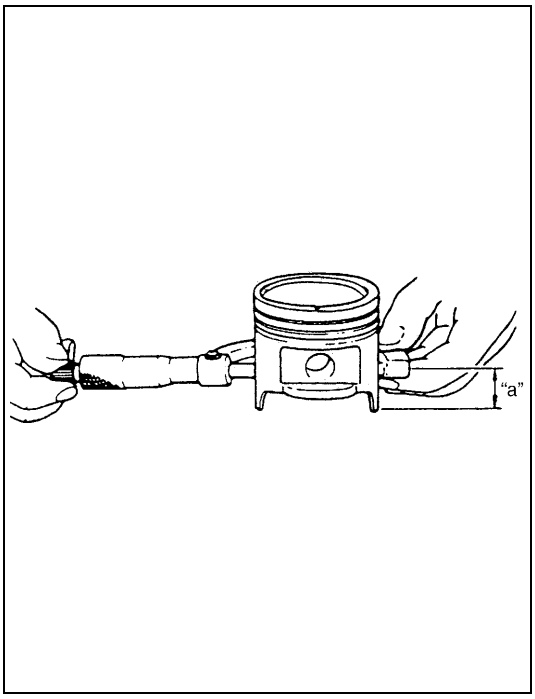

- Inspect piston for faults, cracks or other damaged.
  Damaged or faulty piston should be replaced.
- Piston diameter :
  As indicated in figure, piston diameter should be measured at a position 19.5 mm (0.77 in.) from piston skirt end in the direction perpendicular to piston pin.

Piston diameter specification

Standard size	**77.953 – 77.968 mm (3.0690 – 3.0696 in.) with coating 77.969 – 77.984 mm (3.0696 – 3.0702 in.)**
Oversize 0.25 mm (0.0098 in.)	**78.203 – 78.218 mm (3.0789 – 3.0794 in.)**
Oversize 0.50 mm (0.0196 in.)	**78.453 – 78.468 mm (3.0887 – 3.0893 in.)**

"a" : 19.5 mm (0.77 in.)

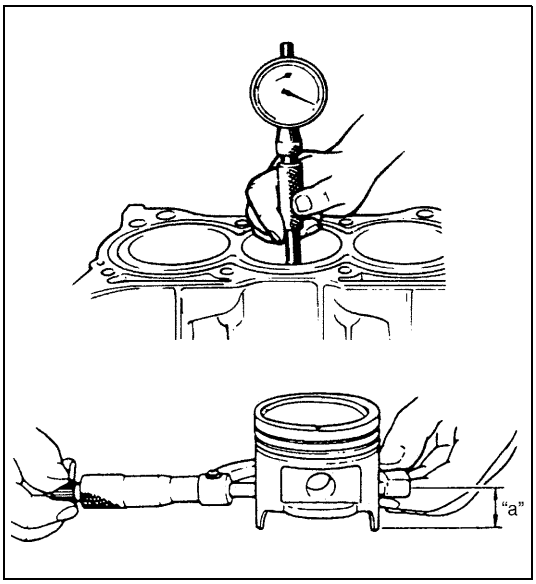

- Piston clearance:
  Measure cylinder bore diameter and piston diameter to find their difference which is piston clearance. Piston clearance should be within specification as given below. If it is out of specification, rebore cylinder and use oversize piston.

Piston clearance
: 0.032 – 0.061 mm (0.0013 – 0.0024 in.)
: 0.016 – 0.045 mm (0.0006 – 0.0018 in.) with coating

NOTE:

Cylinder bore diameters used here are measured in thrust direction at two positions.

"a" : 19.5 mm (0.77 in.)

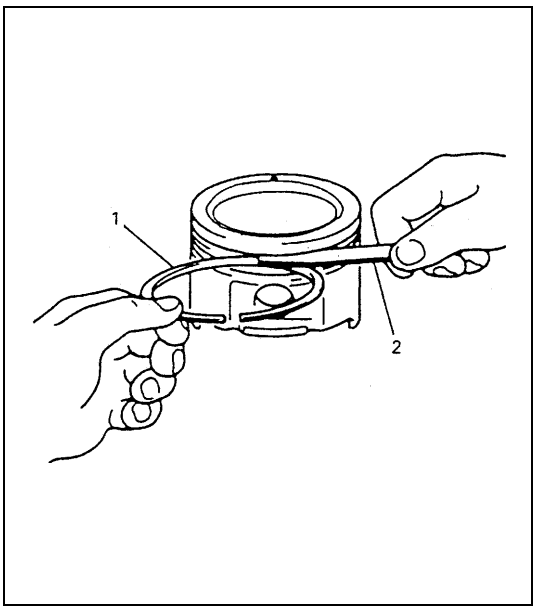

- Ring groove clearance:
  Before checking, piston grooves must be clean, dry and free of carbon deposits.
  Fit new piston ring (1) into piston groove, and measure clearance between ring and ring land by using thickness gauge (2). If clearance is out of limit, replace piston.

Ring groove clearance
Top ring
Standard : 0.03 – 0.07 mm (0.0012 – 0.0028 in.)
Limit : 0.12 mm (0.0047 in.)
2nd ring
Standard : 0.02 – 0.06 mm (0.0008 – 0.0024 in.)
Limit : 0.10 mm (0.0039 in.)
Oil ring
Standard : 0.03 – 0.17 mm (0.0012 – 0.0067 in.)

Piston Pin

- Check piston pin, connecting rod small end bore and piston bore for wear or damage, paying particular attention to condition of small end bore bush. If pin, connecting rod small end bore or piston bore is badly worn or damaged, replace pin, connecting rod and/or piston.

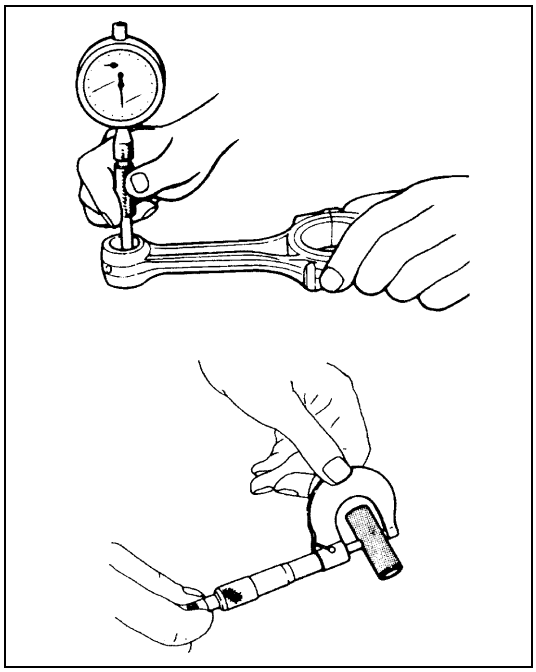

- Piston pin clearance :
  Check piston pin clearance in small end and piston. Replace connecting rod and/or piston if its small end is badly worn or damaged or if measured clearance exceeds limit.

Piston pin clearance in connecting rod small end
: 0.003 – 0.014 mm (0.0001 – 0.0006 in.)

Piston pin clearance in piston
: 0.006 – 0.017 mm (0.00026 – 0.00067 in.)

Small-end bore
: 20.003 – 20.011 mm (0.7875 – 0.7878 in.)

Piston pin dia.
: 19.997 – 20.000 mm (0.7873 – 0.7874 in.)

Piston bore
: 20.006 – 20.014 mm (0.7870 – 0.7874 in.)

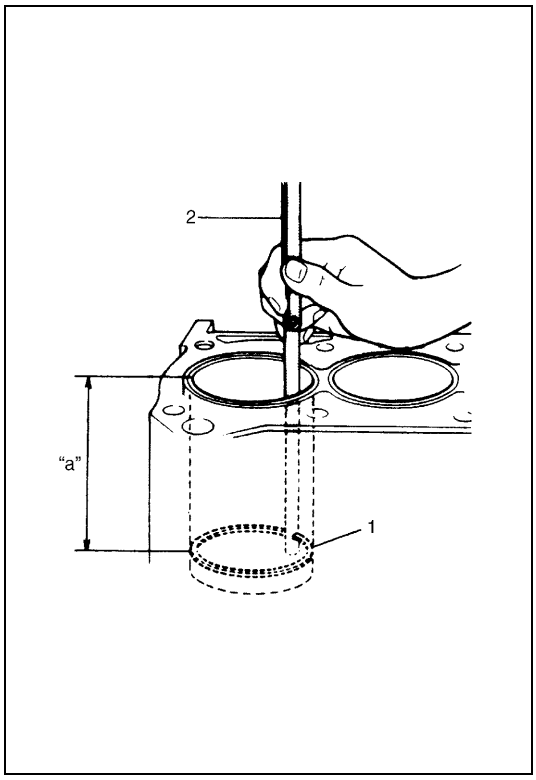

Piston Rings

To measure end gap, insert piston ring (1) into cylinder bore and then measure the gap by using thickness gauge (2).
If measured gap is out of specification, replace ring.

NOTE:
Decarbonize and clean top of cylinder bore before inserting piston ring.

Piston ring end gap

Item	Standard	Limit
Top ring	0.20 – 0.35 mm (0.0079 – 0.0138 in.)	0.7 mm (0.0276 in.)
2nd ring	0.30 – 0.45 mm (0.0118 – 0.0177 in.)	1.0 mm (0.0039 in.)
Oil ring	0.20 – 0.70 mm (0.0079 – 0.0276 in.)	1.5 mm (0.059 in.)

"a" : 120 mm (4.72 in.)

Connecting Rod

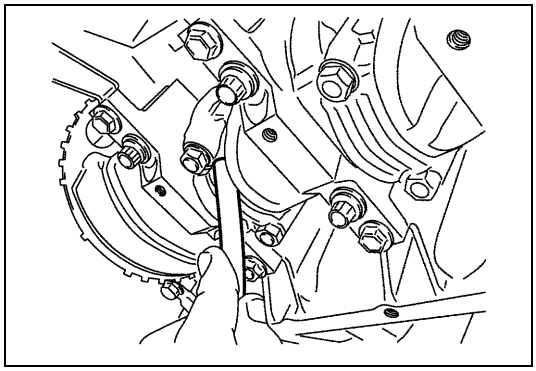

- Big-end side clearance:
  Check big-end of connecting rod for side clearance, with rod fitted and connected to its crank pin in the normal manner. If measured clearance is found to exceed its limit, replace connecting rod.

Big-end side clearance
Standard : 0.25 - 0.40 mm (0.0098 - 0.0157 in.)
Limit : 0.35 mm (0.0138 in.)

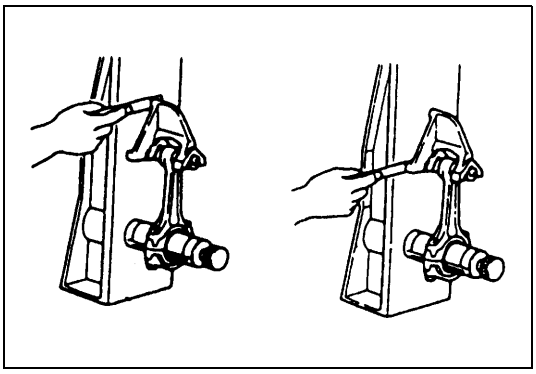

- Connecting rod alignment :
  Mount connecting rod on aligner to check it for bow and twist. If limit is exceeded, replace it.

Connecting rod alignment
Limit on bow : 0.05 mm (0.0020 in.)
Limit on twist : 0.10 mm (0.0039 in.)

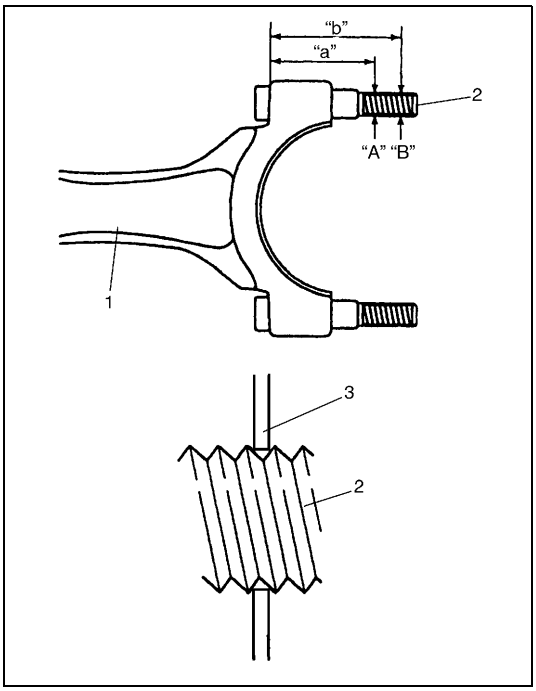

- Connecting rod bolt deformation (Plastic deformation tightening bolt)
  Measure connecting rod (1) bolt (2) for diameter "A" on 32 mm (1.25 in.) from bolt mounting surface and diameter "B" on 40 mm (1.57 in.) from bolt mounting surface by using a micrometer (3).
  Bolt diameter difference should be specification as given below. If it is out of specification, replace connecting rod.

Connecting rod bolt diameter difference limit ("A" – "B") : 0.1 mm (0.004 in.)

Connecting rod bolt measurement distance
"a" : 32 mm (1.25 in.)
"b" : 40 mm (1.57 in.)

Crank Pin and Connecting Rod Bearings

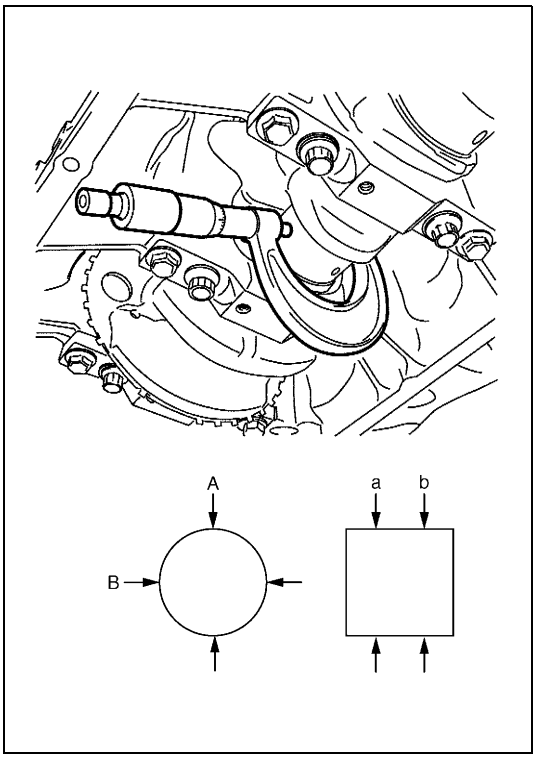

- Inspect crank pin for uneven wear or damage. Measure crank pin for out-of-round or taper with a micrometer. If crank pin is damaged or out-of round or taper is out of limit, replace crankshaft or regrind crank pin to undersize and use undersize bearing.

Crank pin diameter

Connecting rod bearing size	Crank pin diameter
Standard	41.982 – 42.000 mm (1.6528 – 1.6535 in.)
Undersize 0.25 mm (0.0098 in.)	41.732 – 41.750 mm (1.6430 – 1.6437 in.)

Crank pin taper and out-of-round
Limit : 0.01 mm (0.0004 in.)
Out-of-round : A – B
Taper : a – b

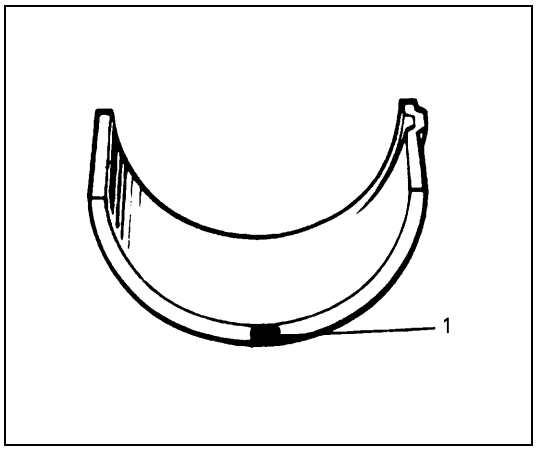

- Rod bearing :
  Inspect bearing shells for signs of fusion, pitting, burn or flaking and observe contact pattern. Bearing shells found in defective condition must be replaced.
  Two kinds of rod bearing are available; standard size bearing and 0.25 mm (0.0098 in.) undersize bearing. For identification of undersize bearing, it is painted red at the position as indicated in figure, undersize bearing thickness is 1.605 – 1.615 mm (0.0632 – 0.0635 in.) at the center of it.

1. Red paint

- Rod bearing clearance :

1) Before checking bearing clearance, clean bearing and crank pin.
2) Install bearing in connecting rod and bearing cap.

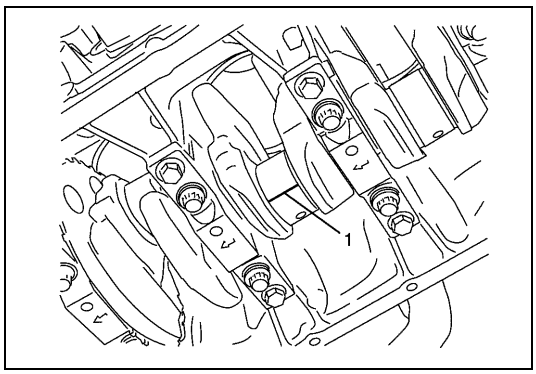

3) Place a piece of gaging plastic (1) to full width of crank pin as contacted by bearing (parallel to crankshaft), avoiding oil hole.

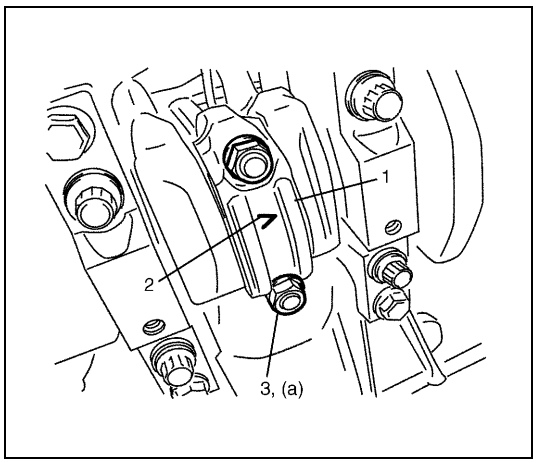

4) Install rod bearing cap (1) to connecting rod.
   When installing cap, be sure to point arrow mark (2) on cap to crankshaft pulley side, as shown in figure. After applying engine oil to rod bolts and tighten cap nuts (3) gradually as follows.
   a) Tighten all cap nuts to 15 N·m (1.5 kg-m, 11.0 lb-ft).
   b) Retighten them to 45°.
   c) Repeat step b) once again.

Tightening torque
Connecting rod bearing cap nuts
(a) : 15 N·m (1.5 kg-m, 11.0 lb-ft) and extra tighten 90°

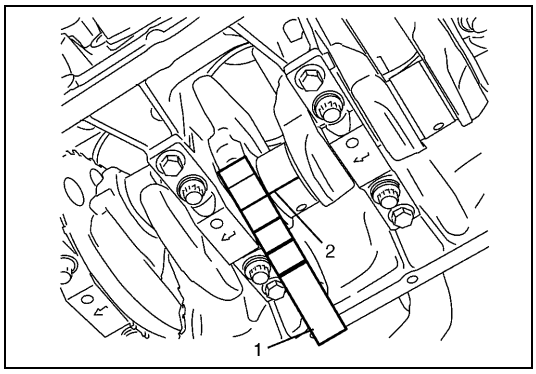

5) Remove cap and using a scale (1) on gaging plastic (2) envelope, measure gaging plastic width at the widest point (clearance).
   If clearance exceeds its limit, use a new standard size bearing and remeasure clearance.

Connecting rod bearing clearance
Standard : 0.029 – 0.047 mm (0.0011 – 0.0019 in.)
Limit : 0.065 mm (0.0026 in.)

6) If clearance can not be brought to within its limit even by using a new standard size bearing, regrind crankpin to undersize and use 0.25 mm undersize bearing.

NOTE:

After checking the rod bearing clearance, make sure that checking for Connecting rod bolt deformation.
Refer to "INSPECTION" of "CONNECTING ROD".

ASSEMBLY

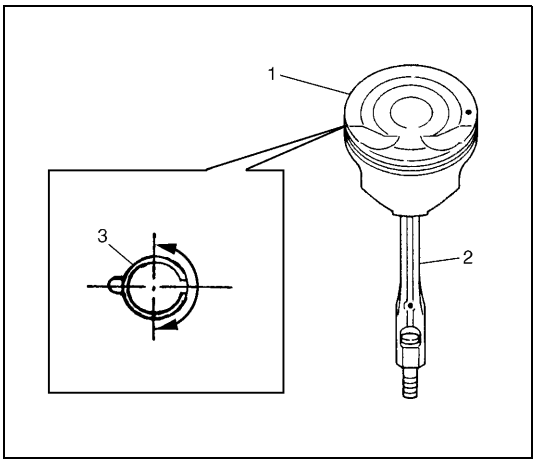

1) Install piston pin to piston (1) and connecting rod (2) :
   a) After applying engine oil to piston pin and piston pin holes in piston and connecting rod.
   b) Fit connecting rod as shown in figure.
   c) Insert piston pin to piston and connecting rod.
   d) Install piston pin circlips (3).

NOTE:

Circlip should be installed with its cut part facing as shown in figure. Install so that circlip end gap comes within such range as indicated by arrow.

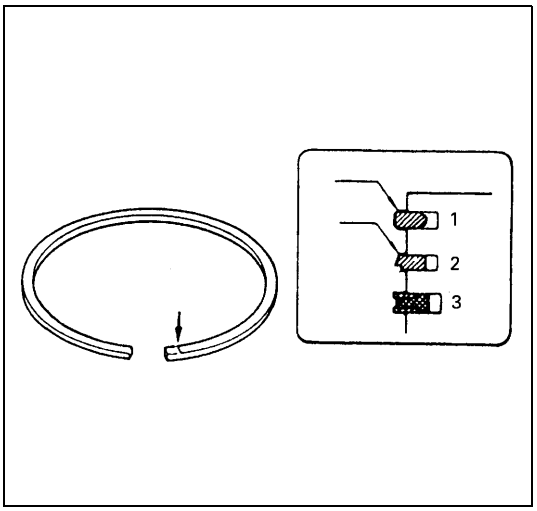

2) Install piston rings to piston :
   a) As indicated in figure, 1st and 2nd rings have "T" mark respectively. When installing these piston rings to piston, direct marked side of each ring toward top of piston.
   b) 1st ring (1) differs from 2nd ring (2) in thickness, shape and color of surface contacting cylinder wall.
   Distinguish 1st ring from 2nd ring by referring to figure.
   c) When installing oil ring (3) install spacer first and then two rails.

1. 1st ring
2. 2nd ring
3. Oil ring

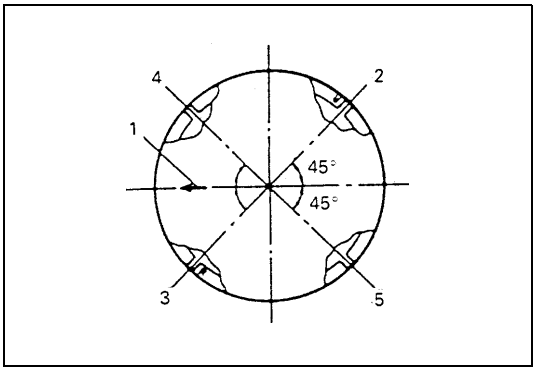

3) After installing three rings (1st, 2nd and oil rings), distribute their end gaps as shown in figure.

1. Arrow mark
2. 1st ring end gap
3. 2nd ring end gap and oil ring spacer gap
4. Oil ring upper rail gap
5. Oil ring lower rail gap

INSTALLATION

1) Apply engine oil to pistons, rings, cylinder walls, connecting rod bearings and crankpins.

NOTE:

Do not apply oil between connecting rod and bearing or between bearing cap and bearing.

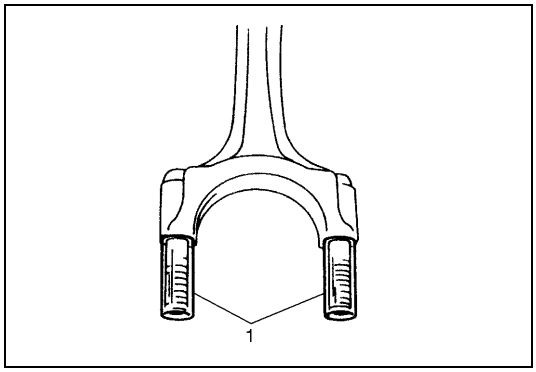

2) Install guide hoses (1) over connecting rod bolts.
These guide hoses protect crank pin and threads of rod bolt from damage during installation of connecting rod and piston assembly.

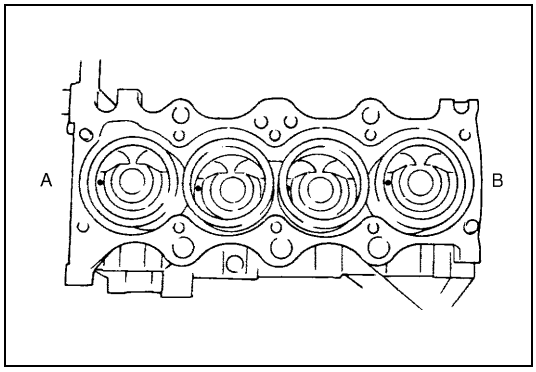

3) When installing piston and connecting rod assembly into cylinder bore, point front mark on piston head to crankshaft pulley side.

A : Crankshaft pulley side
B : Flywheel side

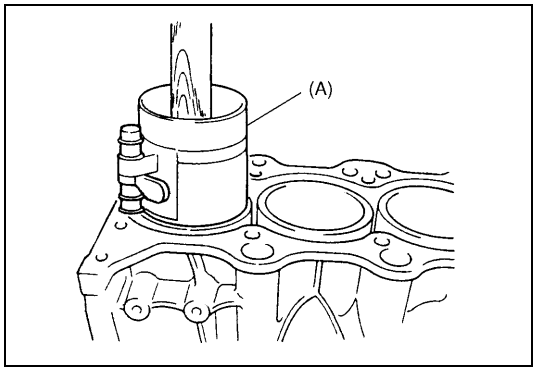

4) Install piston and connecting rod assembly into cylinder bore. Use special tool (Piston ring compressor) to compress rings. Guide connecting rod into place on crankshaft.
Using a hammer handle, tap piston head to install piston into bore. Hold ring compressor firmly against cylinder block until all piston rings have entered cylinder bore.

Special tool
(A) : 09916-77310

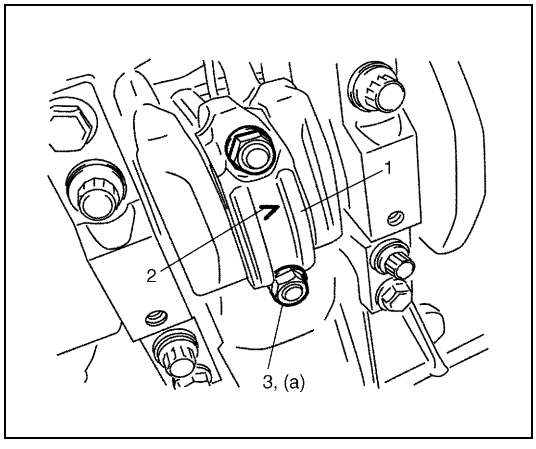

5) Install bearing cap (1):
Point arrow mark (2) on cap to crankshaft pulley side.
After applying oil to rod bolts and tighten cap nuts (3) gradually as follows.
a) Tighten all cap nuts to 15 N·m (1.5 kg-m, 11.0 lb-ft).
b) Retighten them to 45°.
c) Repeat Step b) once again.

Tightening torque
Connecting rod bearing cap nuts
(a) : 15 N·m (1.5 kg-m, 11.0 lb-ft) and then turn to 45° twice.

NOTE:

Before installing bearing cap, make sure that checking for connecting rod bolt deformation.
Refer to "INSPECTION" of "CONNECTING ROD".

6) Reverse removal procedure for installation as previously outlined.
7) Adjust water pump belt tension referring to Section 6B.
8) Adjust A/C compressor belt tension (if equipped) referring to Section 1B.
9) Adjust accelerator cable play referring to Section 6E1.
10) Check to ensure that all removed parts are back in place. Reinstall any necessary parts which have not been reinstalled.
11) Refill cooling system with coolant engine with engine oil.
12) Connect negative cable at battery.
13) Verify that there is no fuel leakage, coolant leakage, oil leakage and exhaust gas leakage at each connection.

ENGINE MOUNTINGS

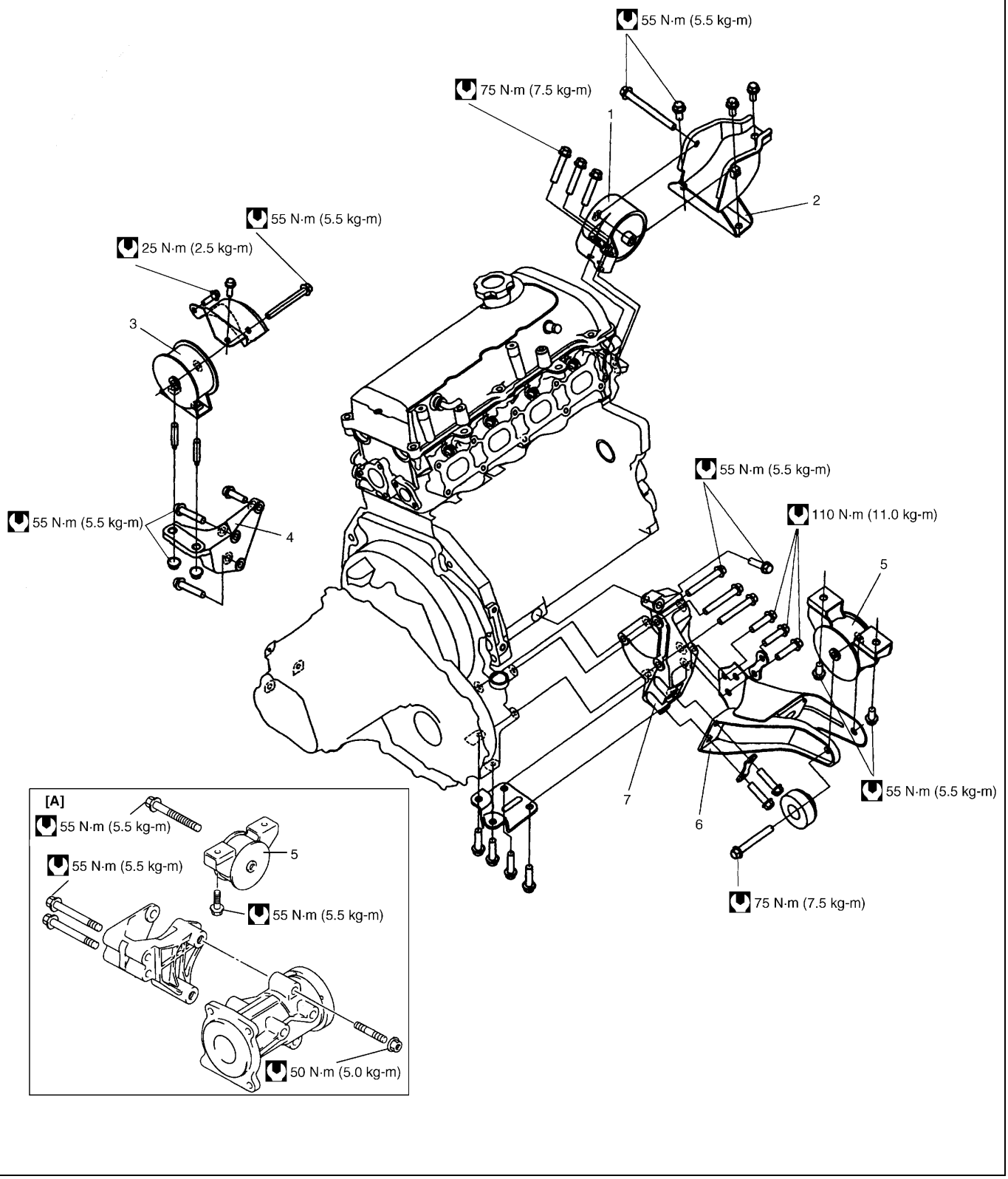

[A] : 4WD MODEL	3. Engine left mounting	6. Engine rear mounting No.1 bracket
1. Engine right mounting	4. Engine left mounting bracket	7. Engine rear mounting No.2 bracket
2. Engine right body side bracket	5. Engine rear mounting	Tightening torque

UNIT REPAIR OVERHAUL

ENGINE ASSEMBLY

REMOVAL

1) Relieve fuel pressure according to procedure described in Section 6.
2) Disconnect negative and positive cables at battery.
3) Remove engine hood after disconnecting windshield washer hose.
4) Remove right and left side engine under covers.
5) Remove A/C compressor belt (if equipped).
6) Remove water pump belt.
7) Drain engine oil, transmission oil or A/T fluid (for A/T vehicle) and transfer oil (for 4WD vehicle).

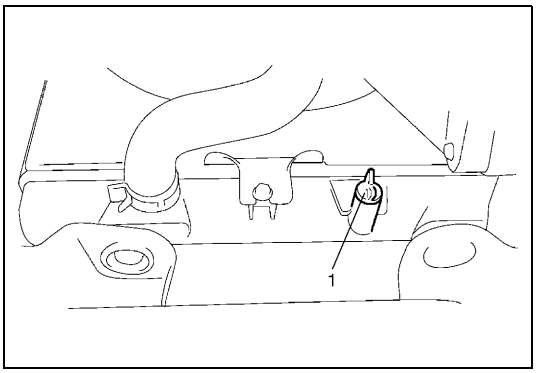

8) Drain coolant.

WARNING:

To help avoid danger of being burned, do not remove drain plug (1) and radiator cap while engine and radiator are still hot. Scalding fluid and steam can be blown out under pressure if plug and cap are taken off too soon.

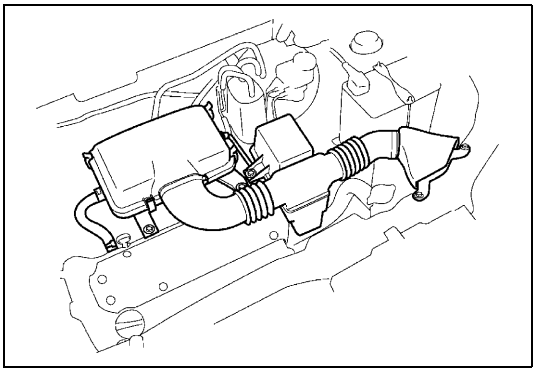

9) Remove air cleaner assembly, resonator and hoses referring to “AIR CLEANER ASSEMBLY AND RESONATOR”.

10) With hose connected, detach A/C compressor from its bracket (if equipped).

NOTE:

Suspend removed A/C compressor at a place where no damage will be caused during removal and installation of engine assembly.

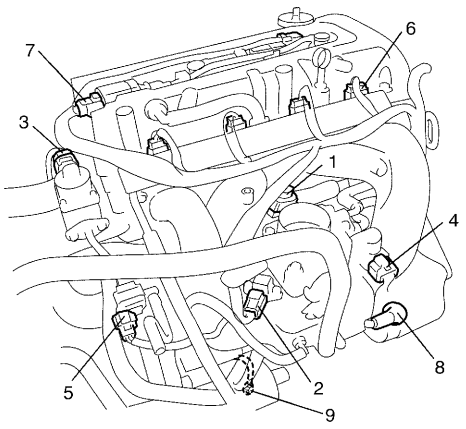

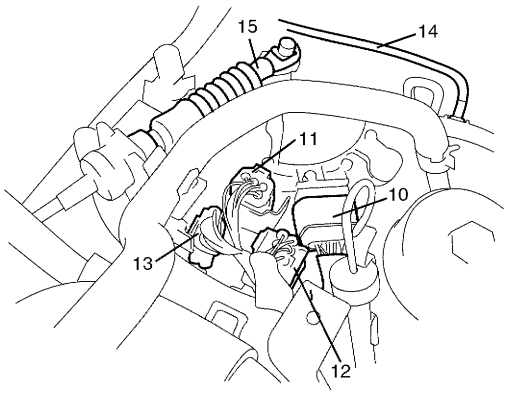

11) Disconnect the following electric lead wires:
- TP sensor (1)
- MAP sensor (2)
- ECT sensor
- CMP sensor
- CKP sensor
- Knock sensor
- Heated oxygen sensors
- EGR valve (3)
- IAC valve (4)
- EVAP canister purge valve (5)
- Injectors (6)
- Ignition coil assembly (7)
- Engine oil pressure switch
- Generator (8)
- Starting motor
- Magnet clutch switch of A/C compressor (if equipped)
- Ground terminal (9) from exhaust manifold and cylinder block
- VSS
- Back up light switch (For M/T vehicle)
- Transmission range switch (10) (For A/T vehicle)
- A/T VSS (11) (For A/T vehicle)
- Dropping resistor (12) (For A/T vehicle)
- A/T shift solenoid and A/T temp. sensor (13) (For A/T vehicle)
- Battery ground cable (14) from transmission
- Each wire harness clamps

12) Remove fuse box from its bracket.
13) Disconnect the following cables :
- Accelerator cable
- Gear select control cable (For M/T vehicle)
- Gear shift control cable (For M/T vehicle)
- Clutch cable (For M/T vehicle)
- Gear select cable (15) (For A/T vehicle)

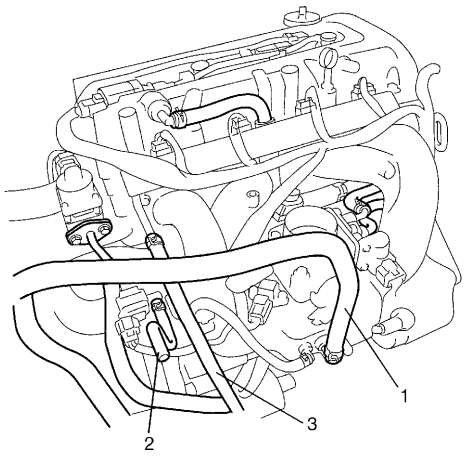

14) Disconnect the following hoses :
- Brake booster hose (1) from intake manifold
- Canister purge hose (2) from EVAP canister purge valve
- Fuel feed hose (3) from fuel delivery pipe
- Heater inlet and outlet hoses from each pipe
- Radiator inlet and outlet hoses from each pipe

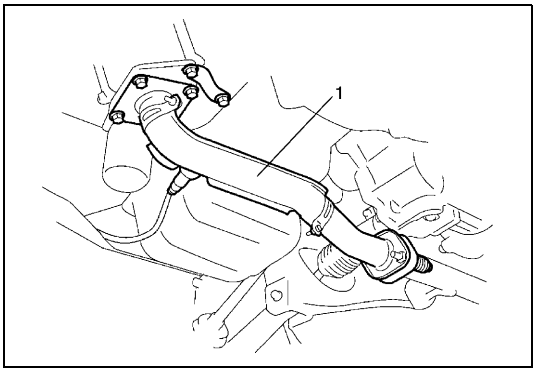

15) Remove exhaust No.1 pipe (1).

16) Disconnect right and left drive shaft joints from differential gear referring to Section 4.
    For engine and transmission removal, it is not necessary to remove drive shafts from steering knuckle.
17) For 4WD vehicle, remove propeller shaft referring to Section 4B.
18) Remove generator referring to Section 6H.

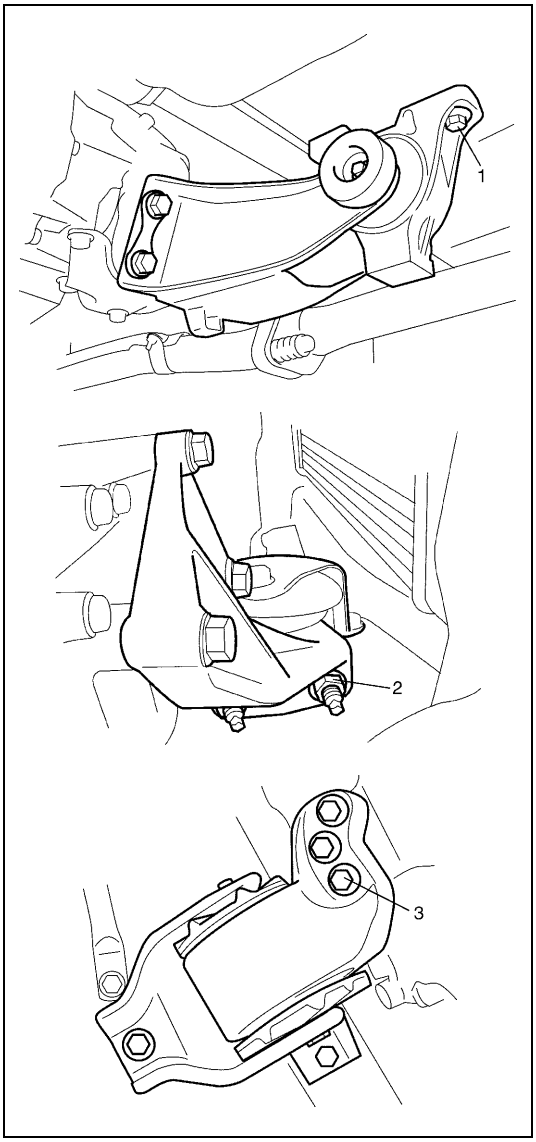

19) Install lifting device.
20) Remove engine rear mounting bolts (1), engine left mounting bracket nuts (2) and engine right mounting bolts (3).

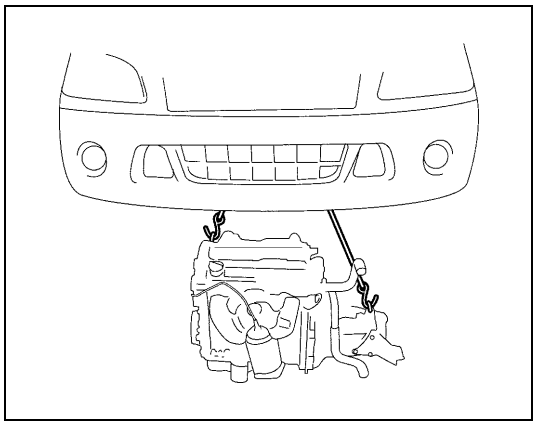

21) Before removing engine with transmission from body, recheck to make sure all hoses, electric wires and cables are disconnected from engine and transmission.
22) Lower engine with transmission from body.

NOTE:

Before lowering engine, to avoid damage to A/C compressor, raise it through clearance made on engine crankshaft pulley side. At this time, use care so that no excessive force is applied to hoses.

23) Disconnect transmission from engine, referring to Section 7A or 7B.
24) Remove clutch cover and clutch disk, referring to Section 7C (M/T).

INSTALLATION

1) Install clutch cover and clutch disk referring to Section 7C.
2) Connect transmission to engine referring to Section 7A or 7B.
3) Lift engine with transmission into engine compartment, but do not remove lifting device.

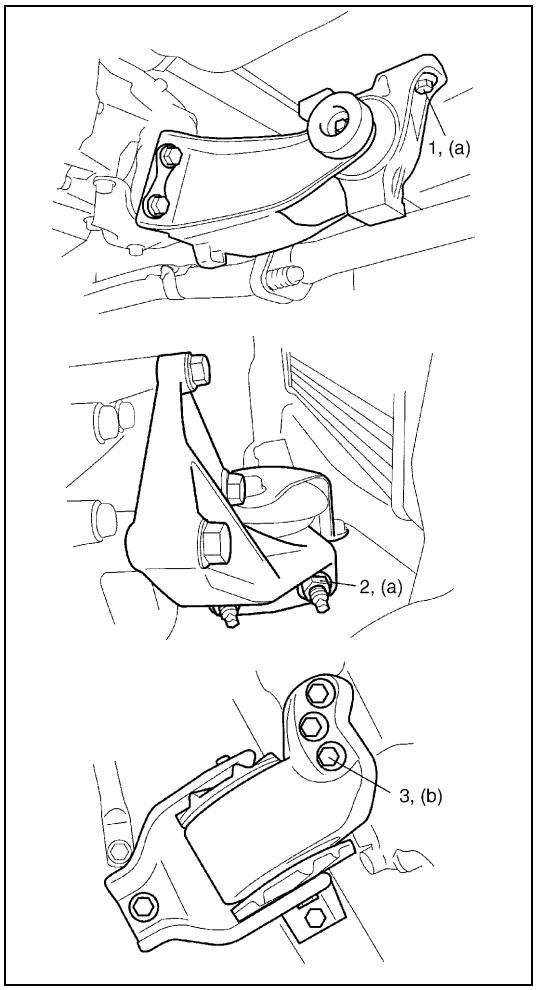

4) Install engine rear mounting bolts (1), engine left mounting bracket nuts (2) and engine right mounting bolts (3).
   Tighten these bolts and nuts to specified torque.

Tightening torque
Engine mounting bolts and nuts for M10
(a) : 55 N·m (5.5 kg-m, 40.0 lb-ft)
Engine mounting bolt for M12
(b) : 75 N·m (7.5 kg-m, 54.5 lb-ft)

5) Remove lifting device.

6) Install generator referring to Section 6H.
7) For 4WD vehicle, install propeller shaft referring to Section 4B.
8) Connect drive shaft joints referring to Section 4.

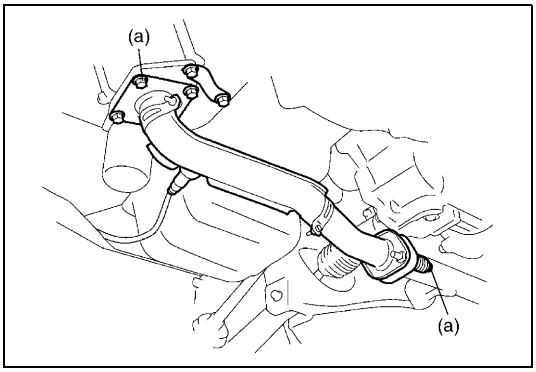

9) Install exhaust No.1 pipe and tighten pipe fasteners to specified torque.

Tightening torque
Exhaust No.1 pipe bolts (a) : 50 N·m (5.0 kg-m, 36.5 lb-ft)

10) Reverse disconnected hoses, cables and electric wires for connection.
11) Install air cleaner assembly, resonator and hoses referring to “AIR CLEANER ASSEMBLY AND RESONATOR”
12) Install A/C compressor to bracket (if equipped).
13) Adjust water pump belt tension referring to Section 6B.
14) Adjust A/C compressor belt tension (if equipped) referring to Section 1B.
15) Adjust accelerator cable play referring to Section 6E1.
16) Check to ensure that all removed parts are back in place. Reinstall any necessary parts which have not been reinstalled.
17) Refill cooling system with coolant engine with engine oil and A/T with specified A/T fluid (vehicle with A/T).
18) Connect negative cable at battery.
19) Verify that there is no fuel leakage, coolant leakage, oil leakage, A/T fluid leakage (vehicle with A/T) and exhaust gas leakage at each connection.

MAIN BEARINGS, CRANKSHAFT AND CYLINDER BLOCK

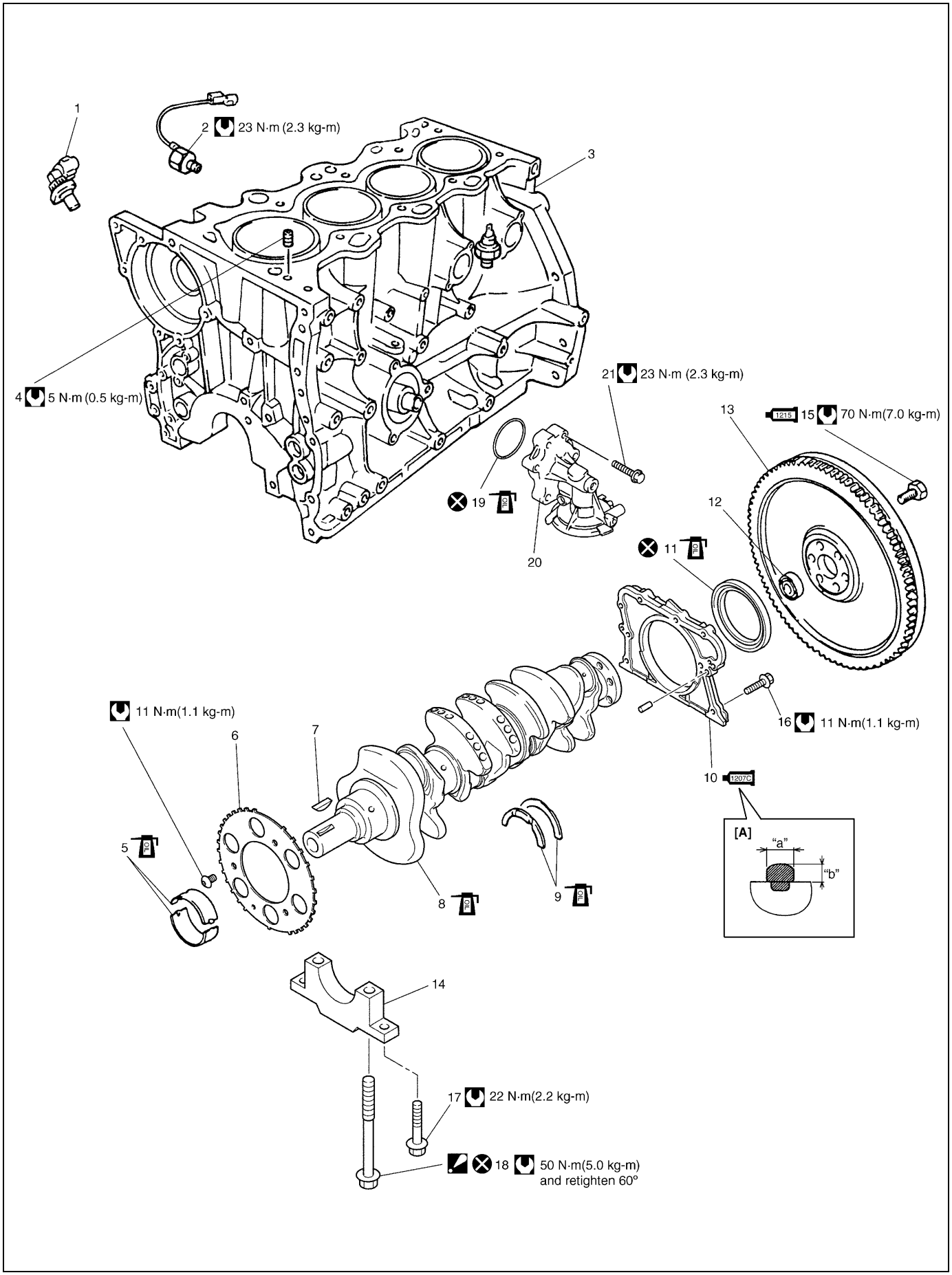

[A] : Sealant application amount	4. Venturi plug	14. Main bearing cap
[B] : 1) Tighten all bolts to 50 N·m (5.0 kg-m) 2) Then, turn all bolts to 60°	5. Main bearing	15. Flywheel mounting bolt
Tightening torque	6. Sensor plate	16. Rear oil seal housing mounting bolt
Do not reuse.	7. Crankshaft timing sprocket key	17. Main bearing mounting No.2 bolt
Apply engine oil to inside / sliding surface.	8. Crankshaft	18. Main bearing mounting No.1 bolt Never reuse it due to plastic deformation tightening bolt.
"a" : 3 mm (0.12 in.)	9. Thrust bearing	19. O-ring
"b" : 2 mm (0.08 in.)	10. Rear oil seal housing : Apply sealant 99000-31150 to mating surface.	20. Oil filter adapter case
1. CKP sensor (if equipped)	11. Rear oil seal	21. Oil filter adapter bolt
2. Knock sensor	12. Input shaft bearing	
3. Cylinder block	13. Flywheel	

REMOVAL

1) Remove engine assembly from vehicle as previously outlined.

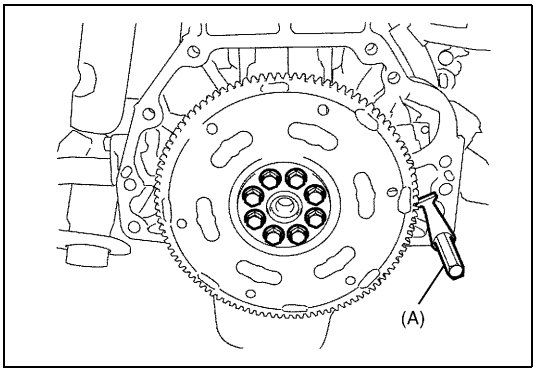

2) Remove clutch flywheel (drive plate for A/T) by using special tool.

Special tool
(A) : 09924-17810

3) Remove the following parts from engine as previously outlined.
- Oil pan and oil pump strainer
- Intake manifold and exhaust manifold
- Cylinder head cover
- Timing chain cover
- Timing chain guide, chain tensioner adjuster, chain tensioner, timing chain and crankshaft timing sprocket
- Camshaft, tappet and shim
- Cylinder head assembly
- Piston and connecting rod

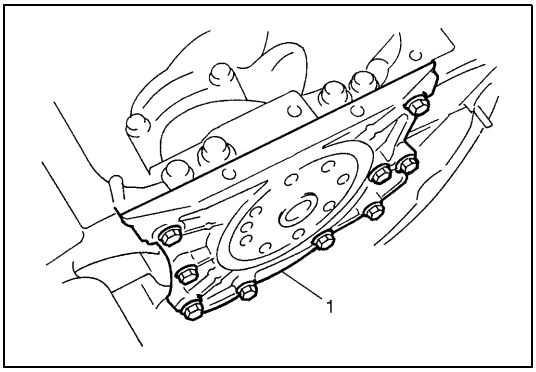

4) Remove rear oil seal housing (1).

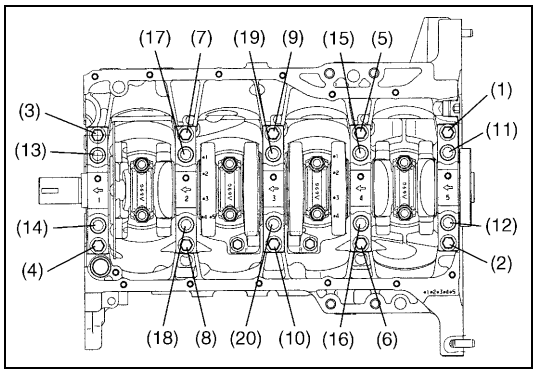

5) Loosen bearing cap No.1 and No.2 bolts in such order as indicated in figure and remove them.
6) Remove crankshaft from cylinder block.

INSPECTION

Crankshaft

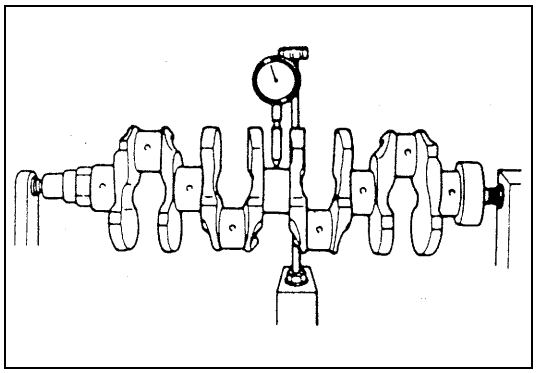

Crankshaft runout

Using a dial gauge, measure runout at center journal. Rotate crankshaft slowly. If runout exceeds its limit, replace crankshaft.

Crankshaft runout
Limit : 0.04 mm (0.0016 in.)

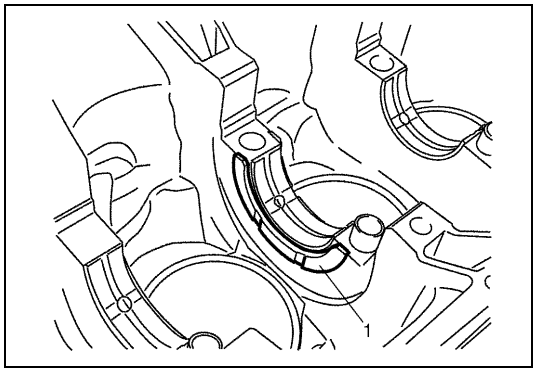

Crankshaft thrust play

Measure this play with crankshaft set in cylinder block in the normal manner, that is with thrust bearing (1) and journal bearing caps installed.

Thickness of crankshaft thrust bearing
Standard : 2.500 mm (0.0984 in.)
Oversize (0.125 mm (0.0049 in.)) : 2.563 mm (0.1009 in.)

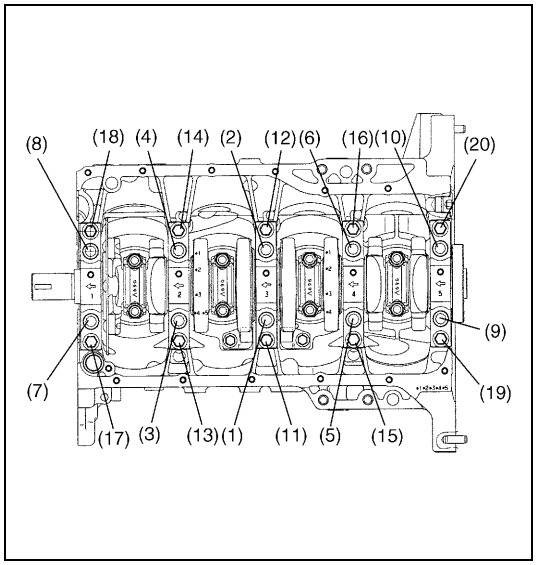

Tighten bearing cap No.1 bolts (1) – (10) and No.2 bolts (11) – (20) gradually as follows.

1) Tighten bolts (1) – (10) to 30 N·m (3.0 kg-m, 22.0 lb-ft) according to numerical order in figure.
2) In the same manner as in Step 1), tighten them to 50 N·m (5.0 kg-m, 36.5 lb-ft).
3) Tighten bolts (11) – (20) to 22 N·m (2.2 kg-m, 16.0 lb-ft) according to numerical order in figure.

Tightening torque
Crank shaft bearing cap No.1 bolts (1) – (10)
: 50 N·m (5.0 kg-m, 36.5 lb-ft)
Crank shaft bearing cap No.2 bolts (11) – (20)
: 22 N·m (2.2 kg-m, 16.0 lb-ft)

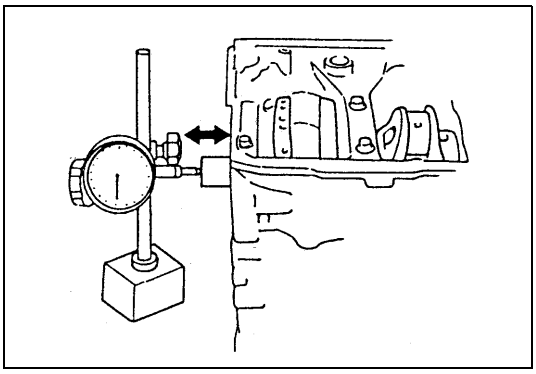

Use a dial gauge to read displacement in axial (thrust) direction of crankshaft.
If its limit is exceeded, replace thrust bearing with new standard one or oversize one to obtain standard thrust play.

Crankshaft thrust play
Standard : 0.11 – 0.31 mm (0.0043 – 0.0122 in.)
Limit : 0.35 mm (0.0138 in.)

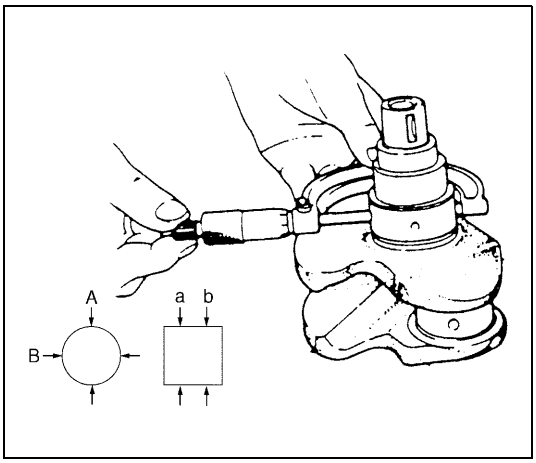

Out-of-round and taper (uneven wear) of journals

An unevenly worn crankshaft journal shows up as a difference in diameter at a cross section or along its length (or both). This difference, if any, is determined by taking micrometer readings. If any one of journals is badly damaged or if amount of uneven wear in the sense explained above exceeds its limit, regrind or replace crankshaft.

Crankshaft out-of-round and taper
Limit : 0.01 mm (0.0004 in.)
Out-of-round : A – B
Taper : a – b

Main Bearings

General information

- Service main bearings are available in standard size and 0.25 mm (0.0098 in.) undersize, and each of them has 5 kinds of bearings differing in tolerance.
- Upper half of bearing (1) has an oil groove (2) as shown in figure.
  Install this half with oil groove to cylinder block.
- Lower half of bearing does not have an oil groove.

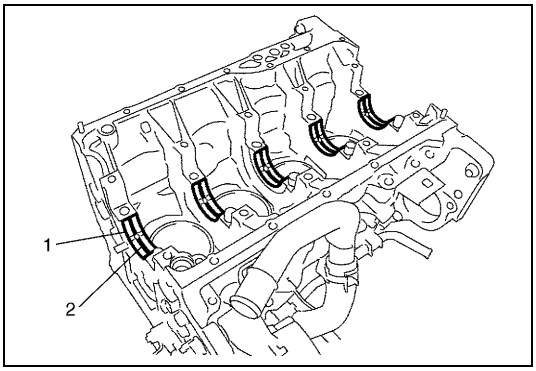

Visual inspection

Check bearings for pitting, scratches, wear or damage.
If any malcondition is found, replace both upper and lower halves.
Never replace either half without replacing the other half.

Main bearing clearance

Check clearance by using gaging plastic according to the following procedure.

1) Remove bearing caps.
2) Clean bearings and main journals.

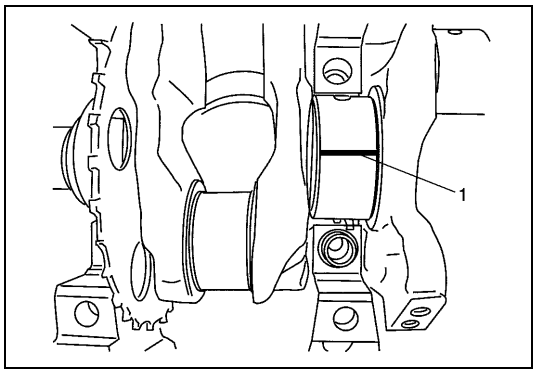

3) Place a piece of gaging plastic (1) the full width of bearing (parallel to crankshaft) on journal, avoiding oil hole.

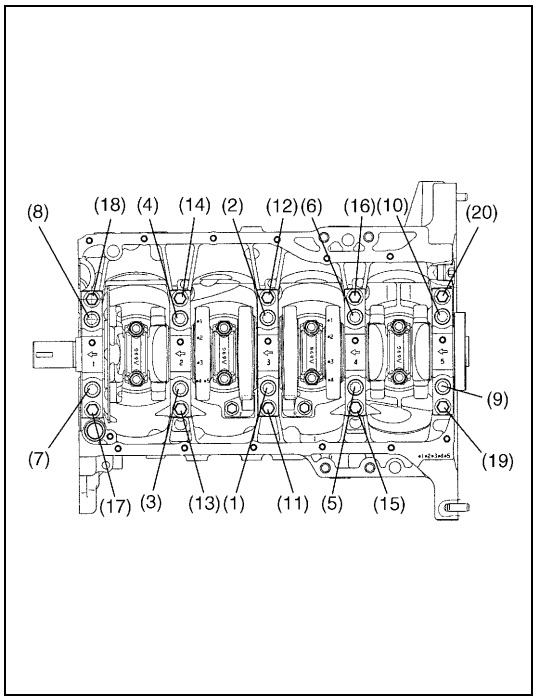

4) Tighten bearing cap No.1 bolts (1) – (10) and No.2 bolts (11) – (20) gradually as follows.
   a) Tighten bolts (1) – (10) to 30 N·m (3.0 kg-m, 22.0 lb-ft) according to numerical order in figure.
   b) In the same manner as in Step a), tighten them to 50 N·m (5.0 kg-m, 36.5 lb-ft).
   c) In the same manner as in step a), retighten them to 60°.
   d) Tighten bolts (11) – (20) to 22 N·m (2.2 kg-m, 16.0 lb-ft) according to numerical order in figure.

Tightening torque
Crank shaft bearing No.1 bolts (1) – (10)
: 50 N·m (5.0 kg-m, 36.5 lb-ft) and extra tighten 60°
Crank shaft bearing No.2 bolts (11) – (20)
: 22 N·m (2.2 kg-m, 16.0 lb-ft)

NOTE:

Do not rotate crankshaft while gaging plastic is installed.

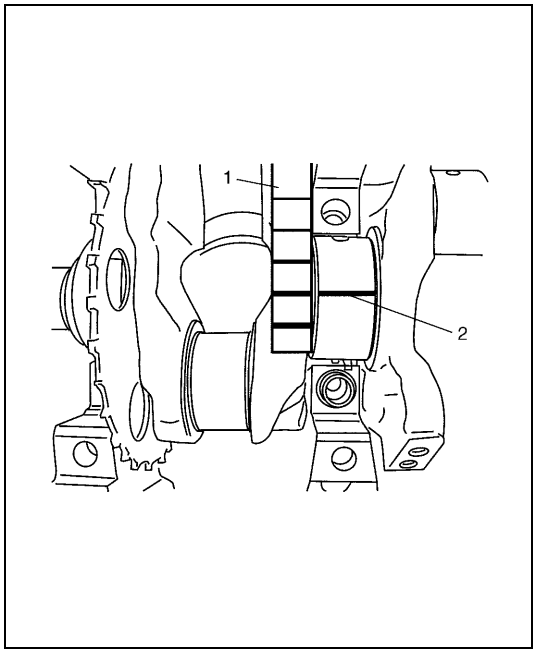

5) Remove bearing caps and using scale (1) on gaging plastic (2) envelop, measure gaging plastic width at its widest point. If clearance exceeds its limit, replace bearing. Always replace both upper and lower inserts as a unit.
   A new standard bearing may produce proper clearance. If not, it will be necessary to regrind crankshaft journal for use of 0.25 mm undersize bearing.
   After selecting new bearing, recheck clearance.

Main bearing clearance
Standard : 0.025 – 0.045 mm (0.0010 – 0.0018 in.)
Limit : 0.065 mm (0.0026 in.)

NOTE:

After checking main bearing clearance, make sure that replace bearing cap No.1 bolts new one.

Selection of main bearings

STANDARD BEARING :

If bearing is in malcondition, or bearing clearance is out of specification, select a new standard bearing according to the following procedure and install it.

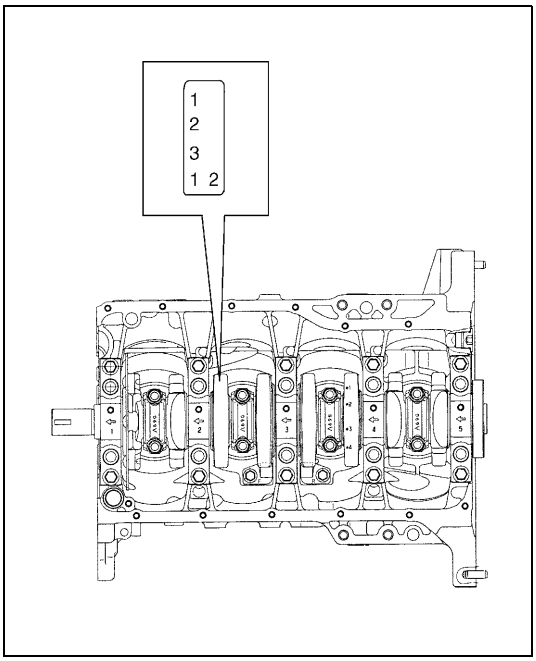

1) First check journal diameter. As shown in figure, crank web No.2 has stamped numbers.
   Three kinds of numbers (“1”, “2” and “3”) represent the following journal diameters.
   Stamped numbers on crank web No.2 represent journal diameters marked with an arrow in figure respectively.
   For example, stamped number “1” indicates that corresponding journal diameter is 44.994 – 45.000 mm (1.7714 – 1.7717 in.).

Crankshaft journal diameter

Stamped numbers	Journal diameter
1	44.994 – 45.000 mm (1.7714 – 1.7717 in.)
2	44.988 – 44.994 mm (1.7712 – 1.7714 in.)
3	44.982 – 44.988 mm (1.7709 – 1.7712 in.)

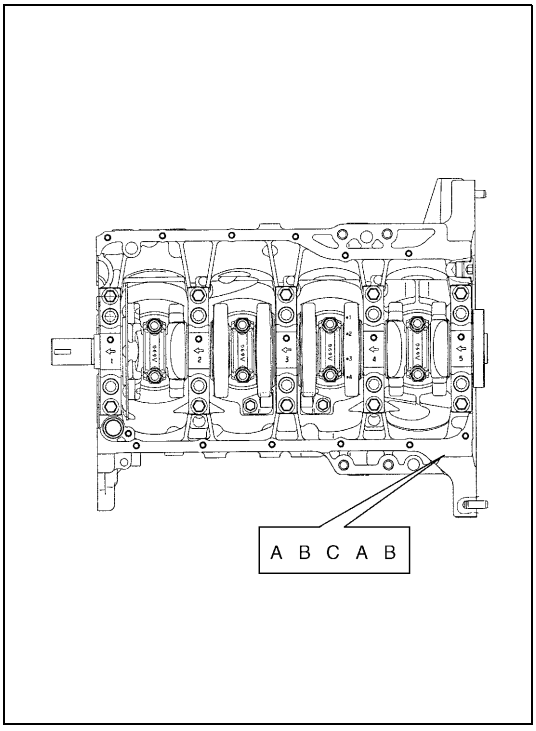

2) Next, check bearing cap bore diameter without bearing. On mating surface of cylinder block, five alphabets are stamped as shown in figure.
   Three kinds of alphabets (“A”, “B” and “C”) represent the following cap bore diameters.
   Stamped alphabets on cylinder block represent bearing cap bore diameter marked with an arrow in figure respectively.
   For example, stamped “A” indicates that corresponding bearing cap bore diameter is 49.000 – 49.006 mm (1.9291 – 1.9294 in.).

Crankshaft bearing cap bore

Stamped alphabet	Bearing cap bore diameter (without bearing)
A	49.000 - 49.006 mm (1.9291 - 1.9294 in.)
B	49.006 - 49.012 mm (1.9294 - 1.9296 in.)
C	49.012 - 49.018 mm (1.9296 - 1.9298 in.)

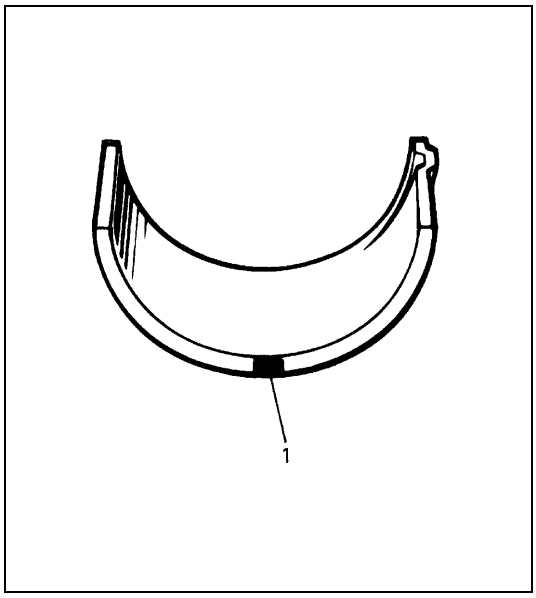

3) There are five kinds of standard bearings differing in thickness. To distinguish them, they are painted in the following colors at the position as indicated in figure.
Each color indicated the following thickness at the center of bearing.

Standard size of crankshaft main bearing thickness

Color painted	Bearing thickness
Pink	1.990 – 1.994 mm (0.0783 – 0.0785 in.)
Purple	1.993 – 1.997 mm (0.0785 – 0.0786 in.)
Brown	1.996 – 2.000 mm (0.0786 – 0.0787 in.)
Green	1.999 – 2.003 mm (0.0787 – 0.0789 in.)
Black	2.002 – 2.006 mm (0.0788 – 0.0790 in.)

1. Paint

4) From number stamped on crank web No.2 and alphabets stamped on cylinder block, determine new standard bearing to be installed to journal, by referring to table shown below.
For example, if number stamped on crank web No.2 is “1” and alphabet stamped on cylinder block is “B”, install a new standard bearing painted in “Purple” to its journal.

Specification of new standard crankshaft main bearing size

		Number stamped on crank web No.2 (Journal diameter)		
		1	2	3
Alphabet stamped on cylinder block (Cap bore dia.)	A	Pink	Purple	Brown
	B	Purple	Brown	Green
	C	Brown	Green	Black
		New standard bearing to be installed.		

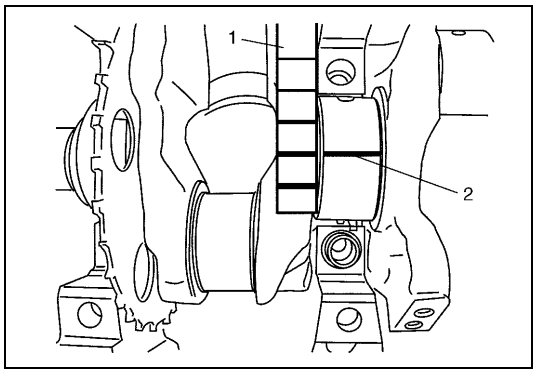

5) Using scale (1) on gaging plastic (2), check bearing clearance with newly selected standard bearing.
If clearance still exceeds its limit, use next thicker bearing and recheck clearance.
6) When replacing crankshaft or cylinder block due to any reason, select new standard bearings to be installed by referring to number stamped on new crankshaft or alphabets stamped on new cylinder block.

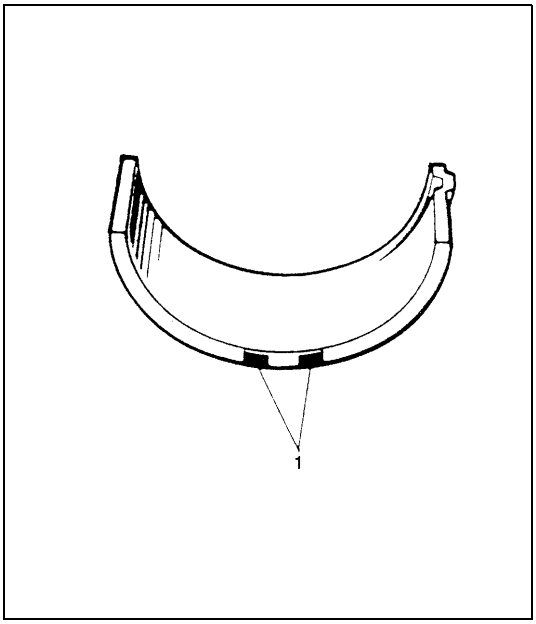

UNDERSIZE BEARING (0.25 mm) :

- 0.25 mm undersize bearing is available, in five kinds varying in thickness.
  To distinguish them, each bearing is painted in the following colors at such position as indicated in figure.
  Each color represents the following thickness at the center of bearing.

Undersize of crankshaft main bearing thickness

Color painted	Bearing thickness
Red and Pink	2.115 - 2.119 mm (0.0833 - 0.0834 in.)
Red and Purple	2.118 - 2.122 mm (0.0834 - 0.0835 in.)
Red and Brown	2.121 - 2.125 mm (0.0835 - 0.0837 in.)
Red and Green	2.124 - 2.128 mm (0.0836 - 0.0838 in.)
Red and Black	2.127 - 2.131 mm (0.0837 - 0.0839 in.)

1. Paint

- If necessary, regrind crankshaft journal and select undersize bearing to use with it as follows.

a) Regrind journal to the following finished diameter.

Finished diameter
: 44.732 – 44.750 mm (1.7611 – 1.7618 in.)

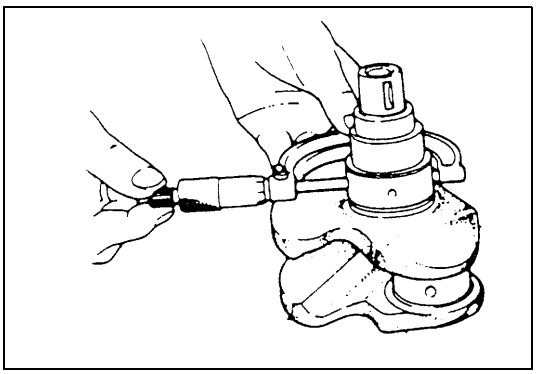

1) Using micrometer, measure reground journal diameter.
   Measurement should be taken in two directions perpendicular to each other in order to check for out-of-round.
2) Using journal diameter measured above and alphabets stamped on cylinder block, select an undersize bearing by referring to table given below.
   Check bearing clearance with newly selected undersize bearing.

Specification of new standard undersize crankshaft main bearing

		Measured journal diameter		
		44.744 – 44.750 mm (1.7616 – 1.7618 in.)	44.738 – 44.744 mm (1.7613 – 1.7616 in.)	44.732 – 44.738 mm (1.7611 – 1.7613 in.)
Alphabets stamped on cylinder block	A	Red and Pink	Red and Purple	Red and Brown
	B	Red and Purple	Red and Brown	Red and Green
	C	Red and Brown	Red and Green	Red and Black
		Undersize bearing to be installed		

Rear Oil Seal

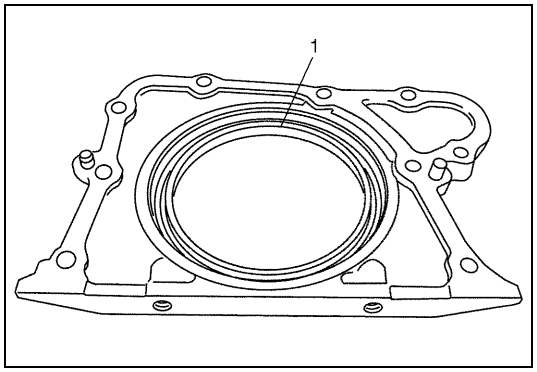

Carefully inspect oil seal (1) for wear or damage.
If its lip is worn or damaged, replace it.

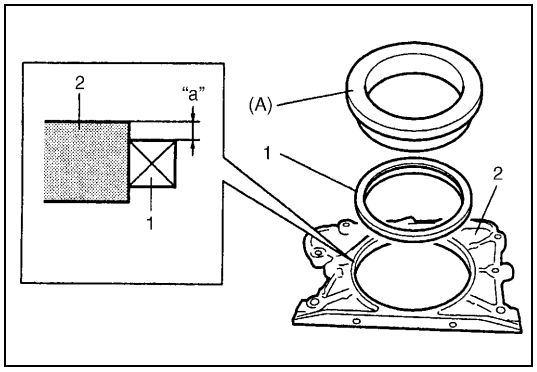

For oil seal installation, press-fit rear oil seal (1) to oil seal housing (2) by using special tool as shown in the figure.

Special tool
(A) : 09911-97820

Drive in dimension
"a" : 3 mm (0.12 in.)

Flywheel

- If ring gear is damaged, cracked or worn, replace flywheel.
- If the surface contacting clutch disc is damaged, or excessively worn, replace flywheel.

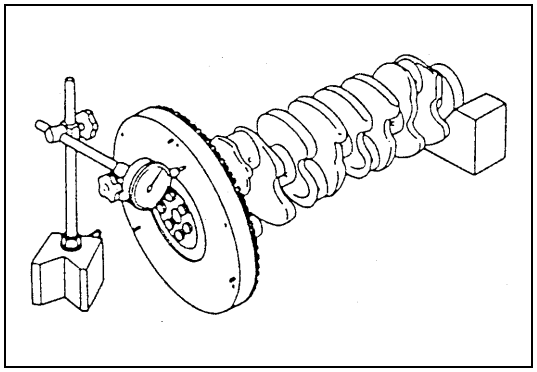

- Check flywheel for face runout with a dial gauge.
  If runout exceeds its limit, replace flywheel.

Flywheel on runout
Limit : 0.2 mm (0.0079 in.)

Sensor plate

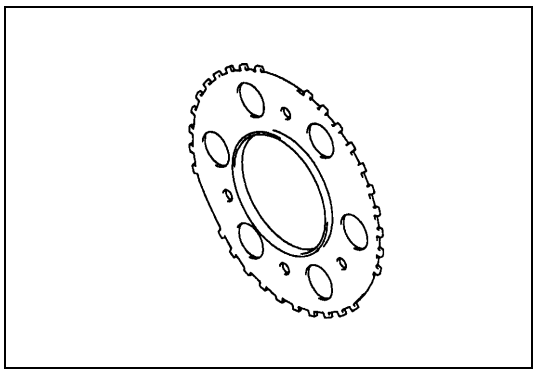

- Check sensor plate for crack or damage. If malcondition is found, replace it.

Cylinder Block

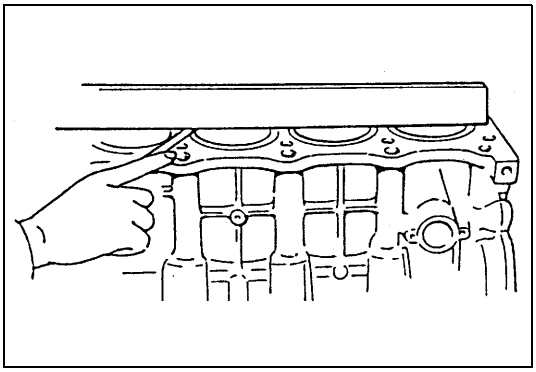

Distortion of gasketed surface

- Using straightedge and thickness gauge, check gasketed surface for distortion and, if flatness exceeds its limit, correct it.

Cylinder block flatness
Limit : 0.05 mm (0.0020 in.)

Honing or reboring cylinders

1) When any cylinder needs reboring, all other cylinders must also be rebored at the same time.
2) Select oversized piston according to amount of cylinder wear.

Oversize piston diameter

Size	Piston diameter
Oversize 0.25	78.203 - 78.218 mm (3.0789 - 3.0794 in.)
Oversize 0.50	78.453 - 78.468 mm (3.0887 - 3.0893 in.)

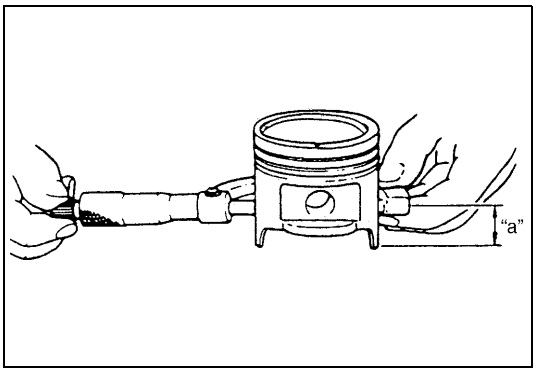

3) Using micrometer, measure piston diameter.

Measurement position for piston diameter
"a" : 19.5 mm (0.77 in.)

4) Calculate cylinder bore diameter to be rebored as follows.
   D = A + B – C
   D : Cylinder bore diameter to be rebored.
   A : Piston diameter as measured.
   B : Piston clearance = 0.02 – 0.04 mm (0.0008 – 0.0016 in.)
   C : Allowance for honing = 0.02 mm (0.0008 in.)
5) Rebore and hone cylinder to calculated dimension.

NOTE:

Before reboring, install all main bearing caps in place and tighten to specification to avoid distortion of bearing bores.

6) Measure piston clearance after honing

INSTALLATION

NOTE:

- **All parts to be installed must be perfectly clean.**
- **Be sure to oil crankshaft journals, journal bearings, thrust bearings, crankpins, connecting rod bearings, pistons, piston rings and cylinder bores.**
- **Journal bearings, bearings caps, connecting rods, rod bearings, rod bearing caps, pistons and piston rings are in combination sets. Do not disturb such combination and make sure that each part goes back to where it came from, when installing.**

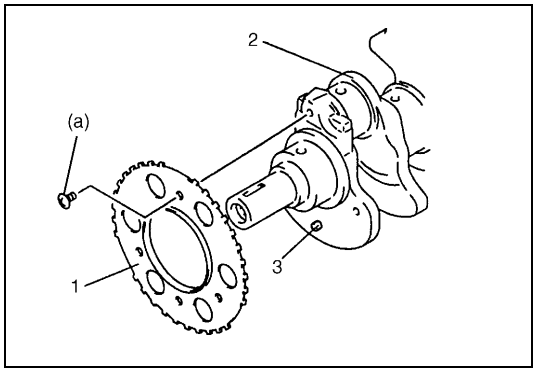

1) Install sensor plate (1) to crankshaft (2) and tighten bolts to specified torque.

NOTE:

When installing sensor plate, align spring pin (3) on crankshaft and hole of sensor plate.

Tightening torque
Sensor plate bolts (a) : 11 N·m (1.1 kg-m, 8.0 lb-ft)

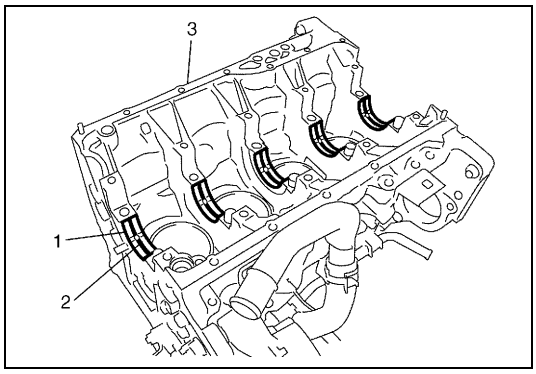

2) Install main bearings to cylinder block.
Upper half of bearing (1), has an oil groove (2).
Install it to cylinder block (3), and the other half without oil groove to bearing cap.
Make sure that two halves are painted in the same color.

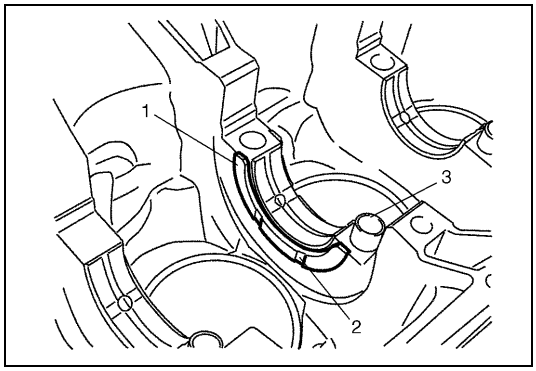

3) Install thrust bearings (1) to cylinder block between No.2 and No.3 cylinders. Face oil groove (2) sides to crank webs.
4) Confirm that dowel pins (3) are installed to intake side of each journal.

5) Install crankshaft to cylinder block.

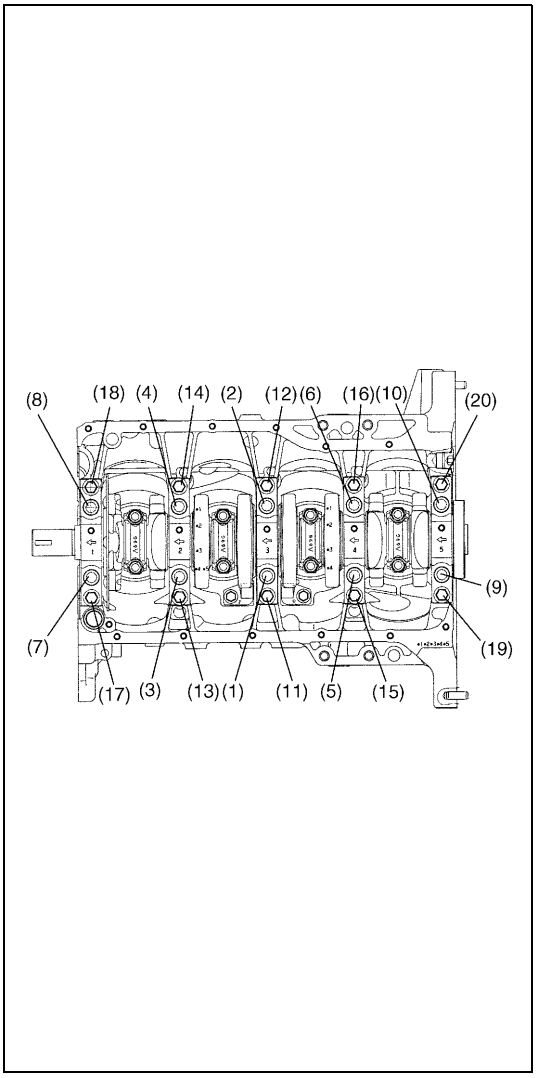

6) Install bearing cap to cylinder block, making sure to point arrow mark (on each cap) to crankshaft pulley side. Fit them sequentially in ascending order, 1, 2, 3, 4 and 5, starting from pulley side.
   After applying engine oil to new bearing cap No.1 bolts ((1) – (10)) and bearing cap No.2 bolts ((11) – (20)), tighten them gradually as follows.
   a) Tighten bolts (1) – (10) to 30 N·m (3.0 kg-m, 22.0 lb-ft) according to numerical order as shown by using a 12 corner socket wrenches.
   b) In the same manner as in Step a), tighten them to 50 N·m (5.0 kg-m, 36.5 lb-ft).
   c) In the same manner as in Step a), retighten them to 60°.
   d) Tighten bolts (11) – (20) to 22 N·m (2.2 kg-m, 16.0 lb-ft) according to numerical order as shown.

Tightening torque
Crankshaft bearing cap No.1 bolts (1) – (10)
: 50 N·m (5.0 kg-m, 36.5 lb-ft) and then turn to 60°
Crankshaft bearing cap No.2 bolts (11) – (20)
: 22 N·m (2.2 kg-m, 16.0 lb-ft)

NOTE:

- **Never reuse bearing cap NO.1 bolts (1) - (10) once disassembled it due to plastic deformation tightening.**
- **After tightening cap bolts, check to be sure that crankshaft rotates smoothly when turning it by 12 N·m (1.2 kg-m, 9.0 lb-ft) torque or below.**

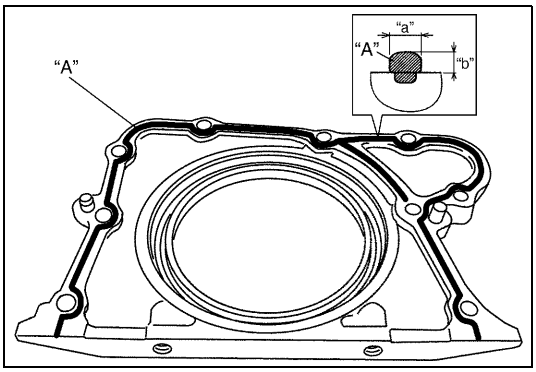

7) Apply sealant to mating surface of rear oil seal housing (1).

"A" : Sealant 99000-31150

Sealant amount for rear oil seal housing
Width "a" : 3 mm, 0.12 in.
Height "b" : 2 mm, 0.08 in.

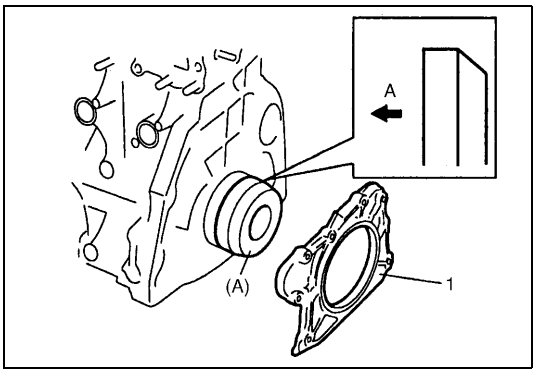

8) Install rear oil seal housing (1) and tighten bolts to specified torque by using special tool.

Special tool
(A) : 09911-97720

Tightening torque
Rear oil seal housing bolts : 11 N·m (1.1 kg-m, 8.0 lb-ft)

A : Crankshaft side

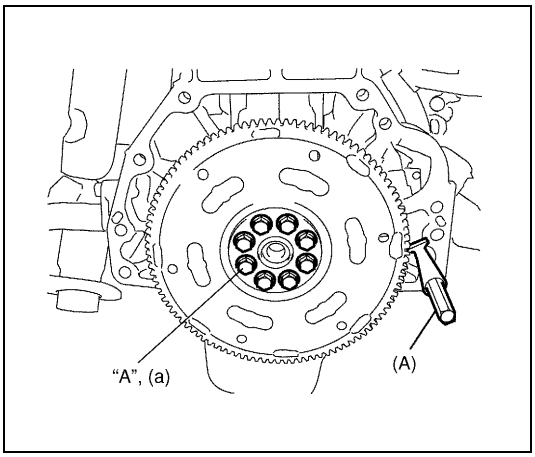

9) Install flywheel (drive plate for A/T).
   Using special tool, lock flywheel or drive plate, and tighten flywheel or drive plate bolts applied with sealant to specification.

   "A" : Sealant 99000-31110

   Special tool
   (A) : 09924-17810

   Tightening torque
   Flywheel or drive plate bolts
   (a) : 70 N·m (7.0 kg-m, 51.0 lb-ft)

10) Install the following parts to engine as previously outlined.
   - Piston and connecting rod
   - Cylinder head assembly
   - Camshaft, tappet and shim
   - Timing chain guide, chain tensioner adjuster, chain tensioner, timing chain and crankshaft timing sprocket
   - Timing chain cover
   - Cylinder head cover
   - Intake manifold and exhaust manifold
   - Oil pan and oil pump strainer
11) Install clutch to flywheel (vehicle with M/T) referring to Section 7C.
12) Install engine assembly to vehicle as previously outlined.

REQUIRED SERVICE MATERIAL

Material	Recommended SUZUKI product (Part Number)	Use
Sealant	Sealant 1207C (99000-31150)	• To apply to mating surfaces of cylinder block and oil pan. • To apply to mating surfaces of cylinder block and timing chain cover. • To apply to sealing surfaces of cylinder head cover. • To apply to mating surfaces to rear oil seal housing.
	Sealant 1207B (99000-31140)	• To apply to mating surface of cylinder block, cylinder head and timing chain cover.
	Sealant 1215 (99000-31110)	• To apply to the thread of the bolt of water outlet pipe. • To flywheel (M/T) or drive plate (A/T) bolts.

TIGHTENING TORQUE SPECIFICATION

Fastening part	Tightening torque		
	N•m	kg-m	lb-ft
Oil pressure switch	14.0	1.4	10.5
Camshaft housing bolts (for replacement of shim)	8.0	0.8	6.0
Camshaft housing bolts	11.0	1.1	8.0
Cylinder head cover bolts	8.0	0.8	6.0
Intake manifold bolts and nuts	25.0	2.5	18.0
Exhaust manifold bolts and nuts	50.0	5.0	36.5
Exhaust No.1 pipe bolts	50.0	5.0	36.5
Exhaust manifold stiffener bolts	50.0	5.5	36.5
Oil pump strainer bolt	11.0	1.1	8.0
Oil pump strainer bracket bolt	11.0	1.1	8.0
Oil pan bolts and nuts	11.0	1.1	8.0
Oil pan drain plug bolt	50.0	5.0	36.5
Timing chain cover bolts	23.0	2.3	17.0
Engine mounting bolts	75.0	7.5	54.5
Engine mounting bracket bolts	55.0	5.5	40.0
Crank shaft pulley bolt	150.0	15.0	108.5
Oil pump rotor plate bolts	11.0	1.1	8.0
Timing chain No.1 guide bolts	9.0	0.9	6.5
Timing chain tensioner adjuster bolt	11.0	1.1	8.0
Venturi plug	5.0	0.5	3.5
Cylinder head bolts for M8	22.0	2.2	16.0
Cylinder head bolts for M10	a) Tighten 40 N·m b) Turn 60° c) Turn 60°	a) Tighten 4.0 kg-m b) Turn 60° c) Turn 60°	a) Tighten 29.0 lb-ft b) Turn 60° c) Turn 60°
Connecting rod bearing cap nuts	a) Tighten 15 N·m b) Turn 45° c) Turn 45°	a) Tighten 1.5 kg-m b) Turn 45° c) Turn 45°	a) Tighten 11.0 lb-ft b) Turn 45° c) Turn 45°
Engine mounting bolts and nuts for M10	55.0	5.5	40.0
Engine mounting bolts and nuts for M12	75.0	7.5	54.5
Crankshaft bearing cap No.1 bolts (for inspection of crankshaft thrust play)	50.0	5.0	36.5
Crankshaft bearing cap No.2 bolts	22.0	2.2	16.0
Sensor plate bolts	11.0	1.1	8.0
Crankshaft bearing cap No.1 bolts	a) Tighten 50 N·m b) Turn 60°	a) Tighten 5.0 kg-m b) Turn 60°	a) Tighten 36.5 lb-ft b) Turn 60°
Rear oil seal housing bolts	11.0	1.1	8.0
Flywheel or drive plate bolts	70.0	7.0	51.0

SPECIAL TOOL

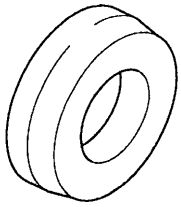 09911-97720 Oil seal guide	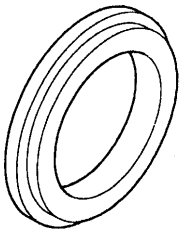 09911-97820 Oil seal installer	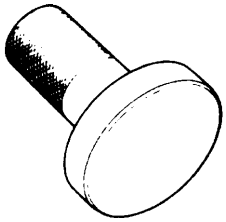 09913-75520 Bearing installer	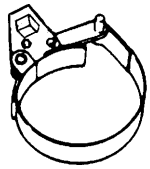 09915-47330 Oil filter wrench
 09915-64510-001 Compression gauge	 09915-64510-002 Connector	 09915-64530 Hose	 09915-67010 Attachment
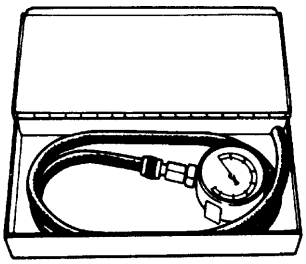 09915-67310 Vacuum gauge	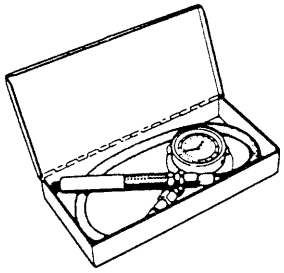 09915-77310 Oil pressure gauge	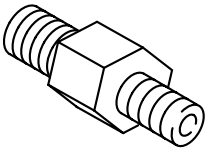 09915-78211 Oil pressure gauge attachment	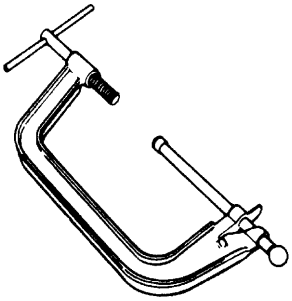 09916-14510 Valve lifer
 09916-14910 Valve lifer attachment	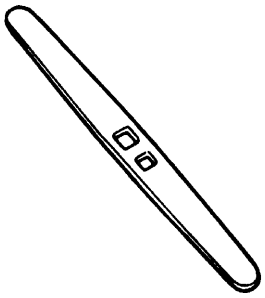 09916-34542 Reamer handle	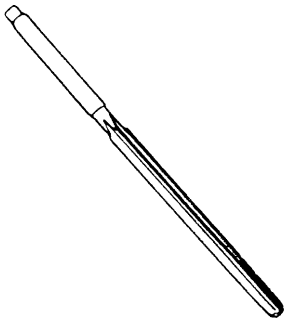 09916-34550 Reamer (5.5 mm)	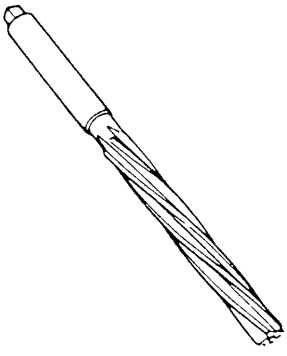 09916-37320 Reamer (10.5 mm)

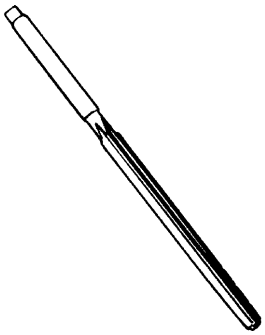 09916-37810 Reamer (6 mm)	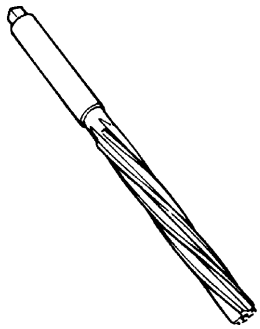 09916-38210 Reamer (11 mm)	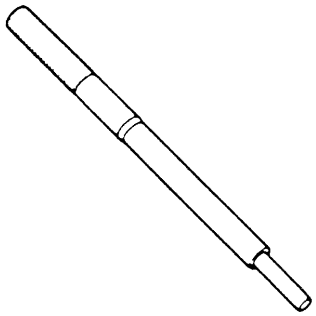 09916-44910 Valve guide remover	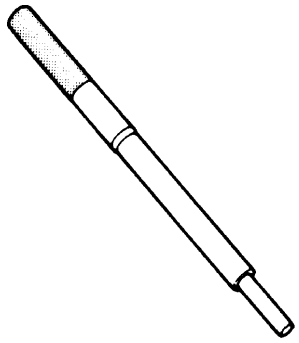 09916-46020 Valve guide remover
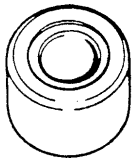 09916-56011 Valve guide installer attachment	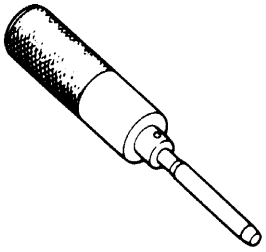 09916-57350 Valve guide installer handle	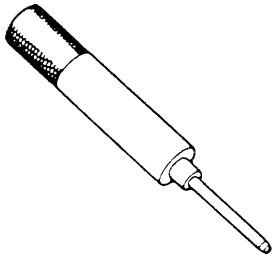 09916-58210 Valve guide installer handle	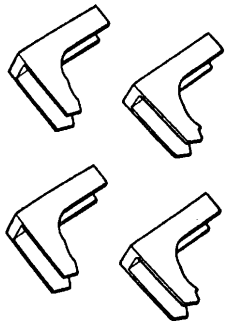 09916-67020 Tappet holder
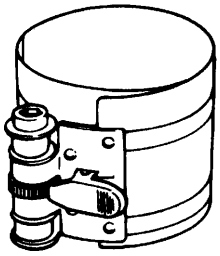 09916-77310 Piston ring compressor	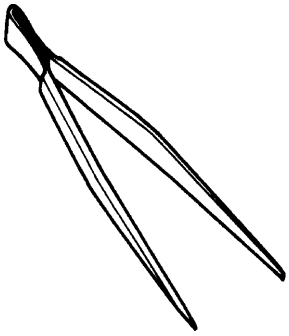 09916-84511 Forceps	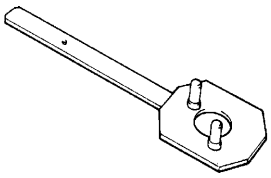 09917-98221 Camshaft lock holder	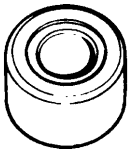 09917-88240 Valve guide installer
 09917-88250 Valve guide installer	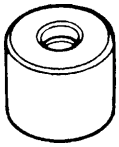 09917-98221 Valve stem seal installer	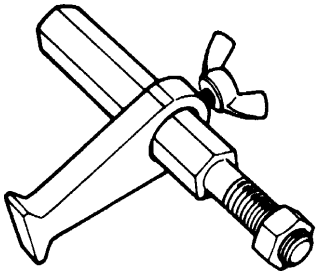 09924-17810 Flywheel holder	

SECTION 6B

ENGINE COOLING

CONTENTS

GENERAL DESCRIPTION 6B-2
COOLING SYSTEM CIRCULATION 6B-2
COOLANT 6B-3
DIAGNOSIS 6B-4
DIAGNOSIS TABLE 6B-4
SYSTEM CIRCUIT 6B-5
SYSTEM CIRCUIT INSPECTION 6B-5
MAINTENANCE 6B-6
COOLANT LEVEL CHECK 6B-6
ENGINE COOLING SYSTEM INSPECTION AND SERVICE 6B-7
COOLING SYSTEM FLUSH AND REFILL ... 6B-7
WATER PUMP/GENERATOR DRIVE BELT TENSION INSPECTION AND ADJUSTMENT 6B-9
ON-VEHICLE SERVICE 6B-10
SYSTEM COMPONENTS 6B-10
COOLING SYSTEM DRAINING 6B-11
COOLING SYSTEM REFILL 6B-11
COOLING WATER PIPES OR HOSES 6B-12
THERMOSTAT 6B-12
RADIATOR 6B-14
RADIATOR AND CONDENSER COOLING FAN 6B-15
RADIATOR AND CONDENSER COOLING FAN RELAY 6B-15
WATER PUMP/GENERATOR DRIVE BELT 6B-15
WATER PUMP 6B-16
ECT SENSOR 6B-18
REQUIRED SERVICE MATERIAL 6B-18
TIGHTENING TORQUE SPECIFICATION 6B-18

GENERAL DESCRIPTION

The cooling system consists of the radiator cap, radiator, coolant reservoir tank, hoses, water pump, cooling fan and thermostat. The radiator is of tube-and-fin type.

COOLING SYSTEM CIRCULATION

While the engine is warmed up (thermostat closed), coolant circulates as follows.

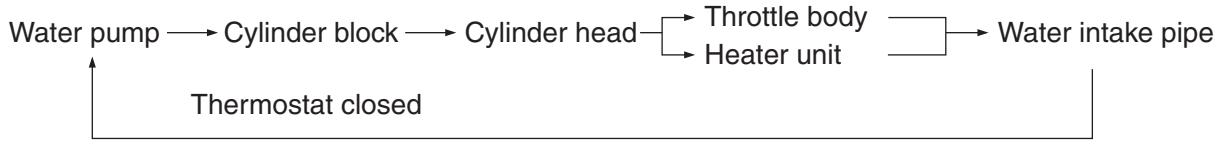

When coolant is warmed up to normal temperature and the thermostat opens, coolant passes through the radiator core to be cooled as well as the above flow circuit.

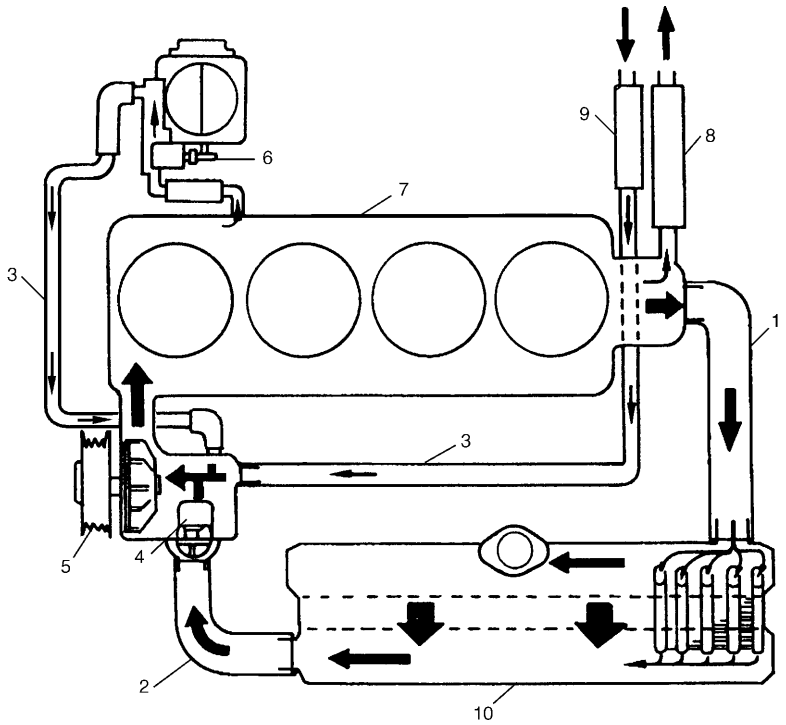

1. Radiator inlet hose	5. Water pump	9. Heater outlet hose
2. Radiator outlet hose	6. Throttle body (Fast idle control plunger)	10. Radiator
3. Water inlet pipe	7. Engine	
4. Thermostat	8. Heater inlet hose	

COOLANT

The coolant recovery system is standard. The coolant in the radiator expands with heat, and the overflow is collected in the reservoir.
When the system cools down, the coolant is drawn back into the radiator.

The cooling system has been filled at the factory with a quality coolant that is a 50/50 mixture of water and ethylene glycol antifreeze (70/30; in a market where no freezing temperature is anticipated).

This 50/50 mixture coolant solution provides freezing protection to –36°C (–33°F).

- Maintain cooling system freeze protection at –36°C (–33°F) to ensure protection against corrosion and loss of coolant from boiling. This should be done even if freezing temperatures are not expected.
- Add ethylene glycol base coolant when coolant has to be added because of coolant loss or to provide added protection against freezing at temperature lower than –36°C (–33°F).

NOTE:

- **Alcohol or methanol base coolant or plain water alone should not be used in cooling system at any time as damage to cooling system could occur.**
- **Even in a market where no freezing temperature is anticipated, mixture of 70% water and 30% ethylene glycol antifreeze (Antifreeze/Anticorrosion coolant) should be used for the purpose of corrosion protection and lubrication.**

Anti-freeze proportioning table

Freezing temperature	**°C**	**–16**	**–36**
	°F	**3**	**–33**
Anti-freeze/Anti-corrosion coolant concentration	**%**	**30**	**50**
Ratio of compound to cooling water	**ltr.**	**1.38/3.22**	**2.30/2.30**
	US pt.	**2.92/6.80**	**4.86/4.86**
	Imp pt.	**2.43/5.67**	**4.05/4.05**

Coolant capacity

Engine radiator and heater	**4.20 liters (8.87/7.39 US/Imp. pt.)**
Reservoir tank	**0.40 liters (0.85/0.70 US/Imp. pt.)**
Total	**4.60 liters (9.72/8.10 US/Imp. pt.)**

DIAGNOSIS

DIAGNOSIS TABLE

Condition	Possible Cause	Correction
Engine overheats (It is in case that radiator fan operates)	Loose or broken water pump belt	Adjust or replace.
	Not enough coolant	Check coolant level and add as necessary.
	Faulty thermostat	Replace.
	Faulty water pump	Replace.
	Dirty or bent radiator fins	Clean or remedy.
	Coolant leakage on cooling system	Repair.
	Clogged radiator	Check and replace radiator as necessary.
	Faulty radiator cap	Replace.
	Improper ignition timing	Adjust.
	Dragging brakes	Adjust brake.
	Slipping clutch	Adjust or replace.
	Poor charge battery	Check and replace as necessary.
	Poor generation generator	Check and repair.
	ECT sensor faulty	Check and replace as necessary.
	Radiator cooling fan relay No.2 and/or No.3 faulty	Check and replace as necessary.
	ECM faulty	Check and replace as necessary.
	Wiring or grounding faulty	Repair and necessary.
	Equipped with too much electric load part	Dismount.
	Radiator cooling fan motor faulty	Check and replace as necessary.
Engine overheats (It is in case that radiator fan won't operates)	Fuse blown	Check "RADTR fan" fuse and check for short circuit to ground.
	Radiator cooling fan relay No.1	Check and replace as necessary.
	ECT sensor faulty	Check and replace as necessary.
	Radiator cooling fan motor faulty	Check and replace as necessary.
	Wiring or grounding faulty	Repair as necessary
	ECM faulty	Check and replace as necessary.

SYSTEM CIRCUIT

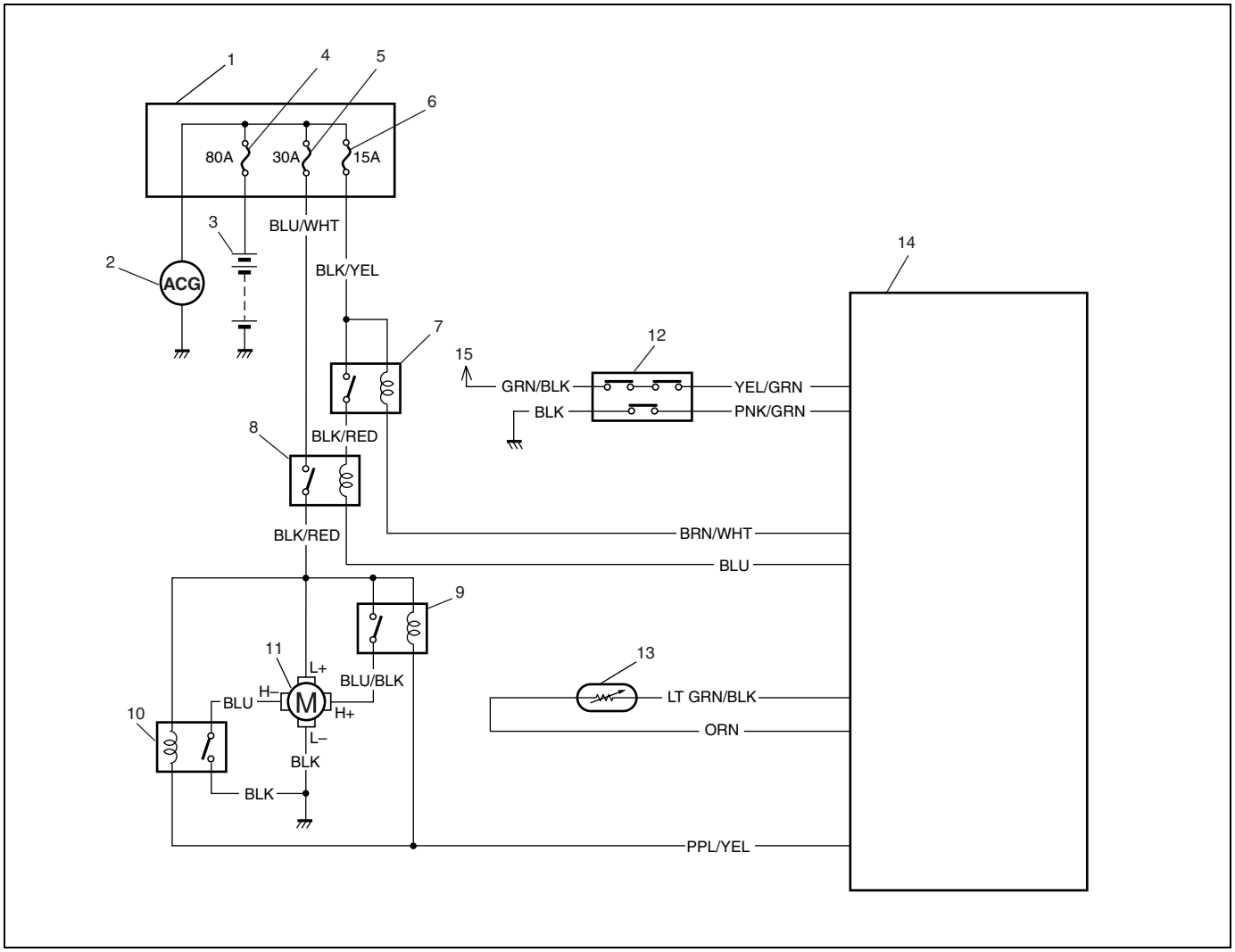

1. Main fuse box	6. ECM main fuse	11. Radiator and condenser cooling fan motor
2. Generator	7. ECM main relay	12. Refrigerant pressure triple switch (if equipped with A/C)
3. Battery	8. Radiator and condenser cooling fan relay No.1	13. ECT sensor
4. Battery fuse	9. Radiator and condenser cooling fan relay No.2	14. ECM
5. RADTR fuse	10. Radiator and condenser cooling fan relay No.3	15. TO A/C switch

SYSTEM CIRCUIT INSPECTION

Refer to “RADIATOR COOLINGFAN CONTROL SYSTEM CHECK” in Section 6

MAINTENANCE

WARNING:

- **Do not remove radiator cap to check engine coolant level; check coolant visually at the see-through coolant reservoir.**
  Coolant should be added only to reservoir as necessary.
- **As long as there is pressure in the cooling system, the temperature can be considerably higher than the boiling temperature of the solution in the radiator without causing the solution to boil. Removal of the radiator cap while engine is hot and pressure is high will cause the solution to boil instantaneously and possibly with explosive force, spewing the solution over engine, fenders and person removing cap. If the solution contains flammable anti-freeze such as alcohol (not recommended for use at any time), there is also the possibility of causing a serious fire.**

COOLANT LEVEL CHECK

To check level, lift hood and look at “see-through” coolant reservoir tank.
It is not necessary to remove radiator cap to check coolant level.

WARNING:

To help avoid danger of being burned :

- **do not remove reservoir tank cap while coolant is boiling, and**
- **do not remove radiator cap while engine and radiator are still hot.**

Scalding fluid and steam can be blown out under pressure if either cap is taken off too soon.

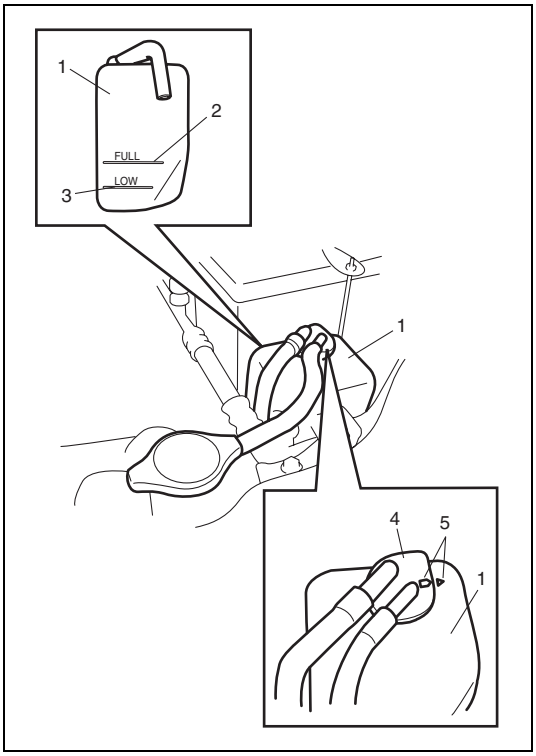

When engine is cool, check coolant level in reservoir tank (1).
A normal coolant level should be between FULL mark (2) and LOW mark (3) on reservoir tank (1).
If coolant level is below LOW mark (3), remove reservoir tank cap (4) and add proper coolant to tank to bring coolant level up to FULL mark (2). Then, reinstall cap (4) and align match marks (5) on tank and cap (4).

NOTE:

- **If proper quality antifreeze is used, there is no need to add extra inhibitors or additives that claim to improve system.**
  They may be harmful to proper operation of system, and are unnecessary expense.
- **When installing reservoir cap, align arrow marks on reservoir and cap.**

ENGINE COOLING SYSTEM INSPECTION AND SERVICE

WARNING:

To help avoid danger of being burned, do not remove radiator cap while engine and radiator are still hot. Scalding fluid and steam can be blown out under pressure if cap is taken off too soon.

1) Check cooling system for leakage or damage.
2) Wash radiator cap and filler neck with clean water by removing radiator cap when engine is cold.
3) Check coolant for proper level and freeze protection.

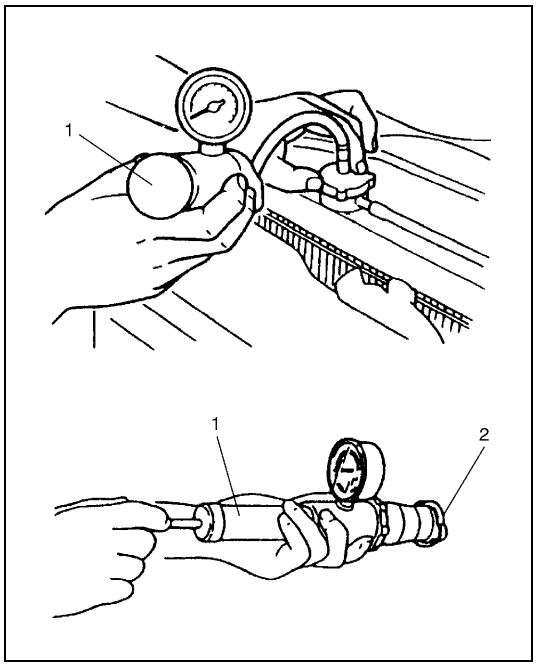

4) Using a pressure tester (1), check system and radiator cap (2) for proper pressure holding capacity.
   If replacement of cap is required, use a proper cap for this vehicle.

Cooling system and radiator cap holding pressure (for inspection)

: 110 kPa (1.1 kg/cm^2, 15.6 psi)

NOTE:

After installing radiator cap to radiator, make sure that the ear of cap lines is parallel to radiator.

5) Tighten hose clamps and inspect all hoses. Replace hoses whenever cracked, swollen or otherwise deteriorated.
6) Clean frontal area of radiator core.

COOLING SYSTEM FLUSH AND REFILL

1) Remove radiator cap when engine is cool.
   a) Turn cap counterclockwise slowly until it reaches a “stop”. (Do not press down while turning it).
   b) Wait until pressure is relieved (indicated by a hissing sound) then press down on cap and continue to turn it counterclockwise.

WARNING:

To help avoid danger of being burned, do not remove radiator cap while engine and radiator are still hot. Scalding fluid and steam can be blown out under pressure if cap is taken off too soon.

2) With radiator cap removed, run engine until upper radiator hose is hot (this shows that thermostat is open and coolant is flowing through system).

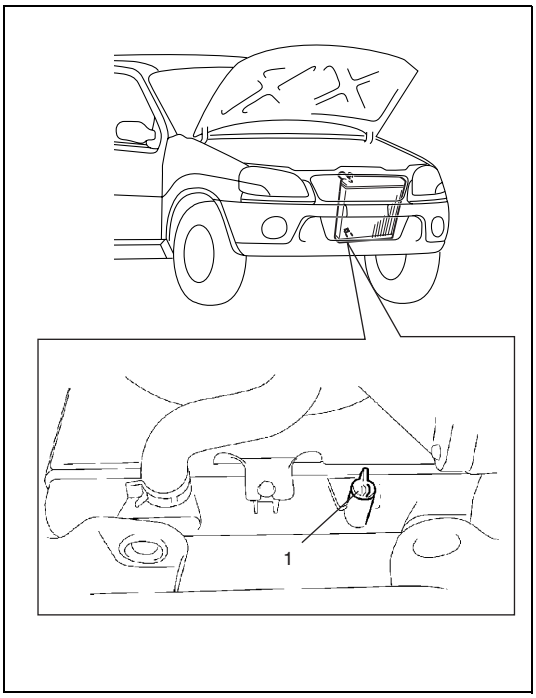

3) Stop engine and drain coolant.
4) Close drain plug. Add water until system is filled and run engine until upper radiator hose is hot again.
5) Repeat Steps 3) and 4) several times until drained liquid is nearly colorless.
6) Drain system and then close radiator drain plug (1) tightly.

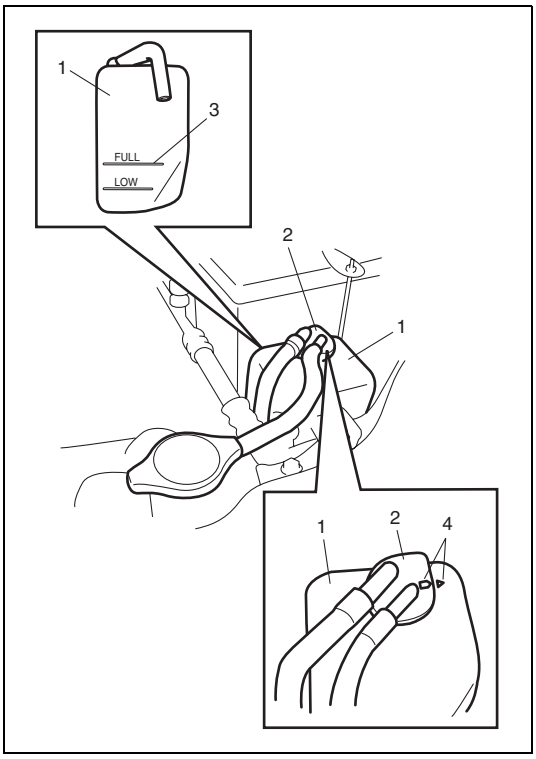

7) Remove reservoir tank (1) and remove cap (2) from reservoir tank (1) and pour out any fluid, scrub and clean inside of tank with soap and water.
   Flush it well with clean water and drain. Reinstall tank.
8) Add coolant that is a mixture of good quality ethylene glycol antifreeze and water to radiator and reservoir tank. For coolant concentration referring to “COOLANT”.
   Fill radiator to the bottom of filler neck and reservoir tank to FULL level mark (3).
9) Reinstall reservoir tank cap and align match marks (4) on reservoir tank and its tank cap.

10) Run engine with radiator cap removed, until radiator inlet hose is hot.
11) With engine idling, add coolant to radiator until level reaches the bottom of filler neck. Install radiator cap, making sure that the ear of cap lines is parallel to radiator.

WATER PUMP/GENERATOR DRIVE BELT TENSION INSPECTION AND ADJUSTMENT

WARNING:

- **Disconnect negative cable at battery before checking and adjusting belt tension.**
- **To help avoid danger of being burned, do not remove radiator cap while engine and radiator are still hot. Scalding fluid and steam can be blown out under pressure if cap is taken off too soon.**

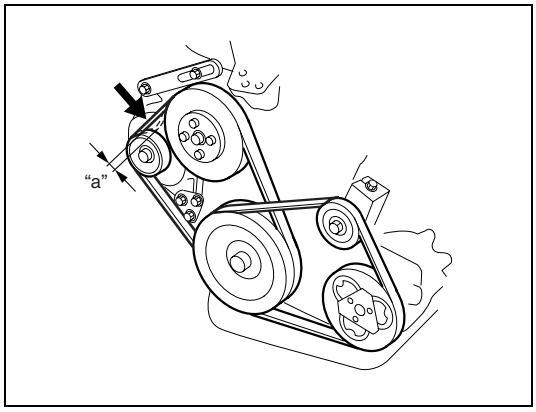

1) Inspect belt for cracks, cuts, deformation, wear and cleanliness. If it is necessary to replace belt, refer to "WATER PUMP/GENERATOR DRIVE BELT" in this section.
2) Check belt for tension. Belt is in proper tension when it deflects 4.5 to 5.5 mm (0.18 – 0.22 in.) under thumb pressure (about 10 kg or 22 lb.).

Water pump / generator drive belt tension "a"
4.5 – 5.5 mm (0.18 – 0.22 in.) as deflection/10 kg (22 lbs)

NOTE:

When replacing belt with a new one, adjust belt tension to 3 – 4 mm (0.12 – 0.16 in.).

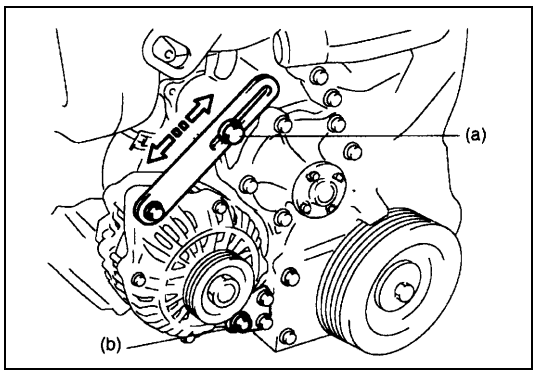

3) If belt is too tight or too loose, adjust it to proper tension by displacing generator position.
4) Tighten generator adjusting bolt and pivot bolts as specified torque.

Tightening torque
Generator adjusting bolt (a) : 23 N·m (2.3 kg-m, 17.0 lb-ft)
Generator pivot bolt (b) : 50 N·m (5.0 kg-m, 36.0 lb-ft)

5) Connect negative cable at battery.

ON-VEHICLE SERVICE

WARNING:

- **Check to make sure that engine coolant temperature is cold before removing any part of cooling system.**
- **Also be sure to disconnect negative cord from battery terminal before removing any part.**

SYSTEM COMPONENTS

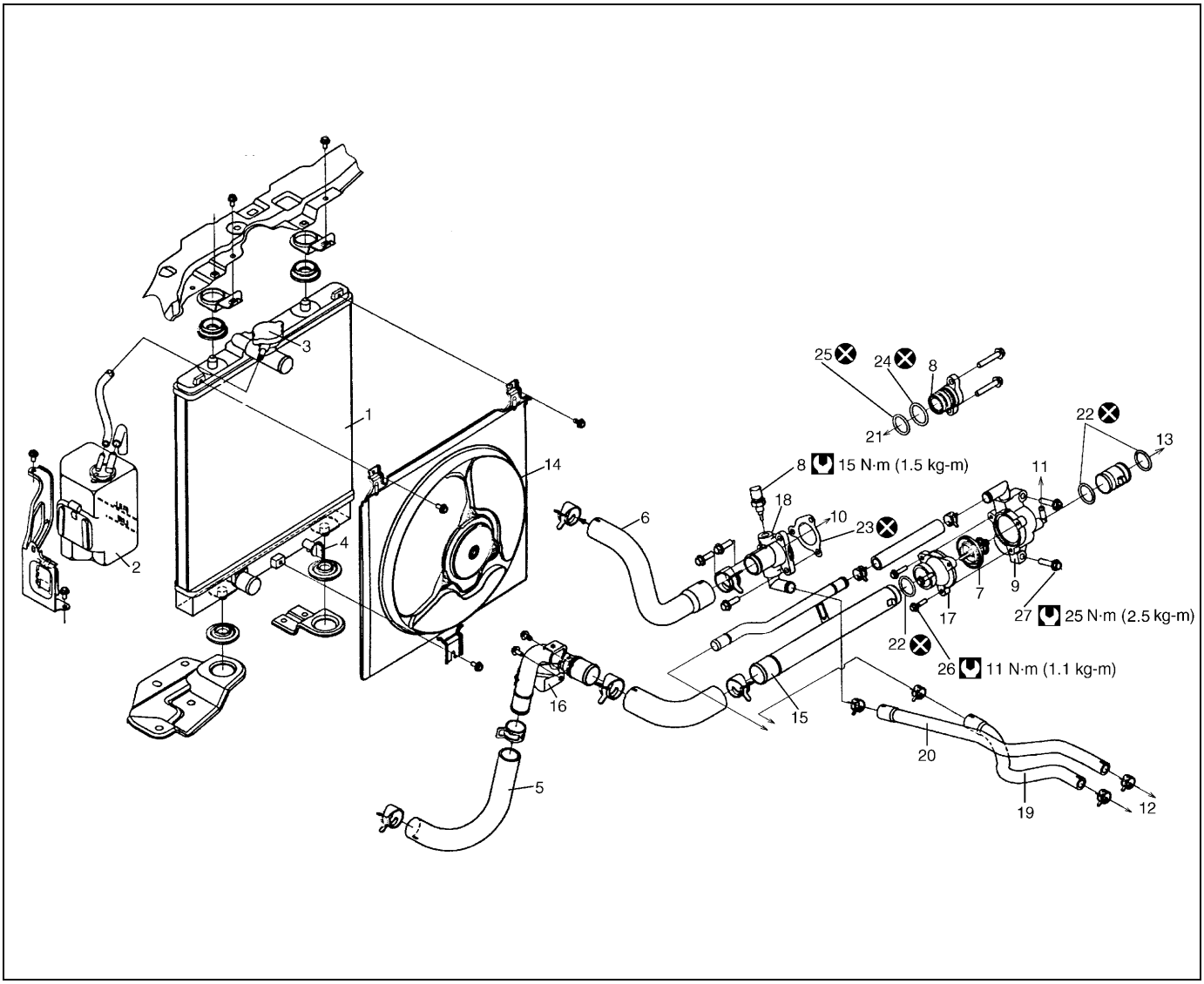

1. Radiator	11. To throttle body	21. To timing chain cover
2. Reservoir tank	12. To heater unit	22. O-Ring
3. Radiator cap	13. To water pump	23. Gasket
4. Drain plug	14. Radiator and condenser cooling fan assembly	24. Water outlet cap O-ring No.1
5. Radiator outlet hose	15. Water inlet pipe No.1	25. Water outlet cap O-ring No.2
6. Radiator inlet hose	16. Water inlet pipe No.2	26. Thermostat cap bolts
7. Thermostat	17. Thermostat cap	27. Thermostat case bolts
8. ECT sensor	18. Water outlet cap	Tightening torque
9. Thermostat case	19. Heater inlet hose	Do not reuse.
10. To cylinder head	20. Heater outlet hose	

COOLING SYSTEM DRAINING

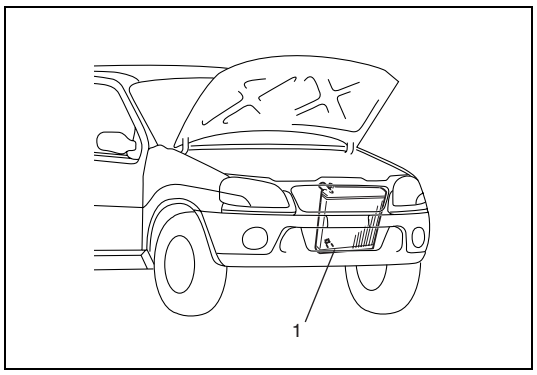

1) Remove radiator cap.
2) Loosen drain plug (1) of radiator to drain coolant.
3) After draining coolant, be sure to tighten drain plug securely.

COOLING SYSTEM REFILL

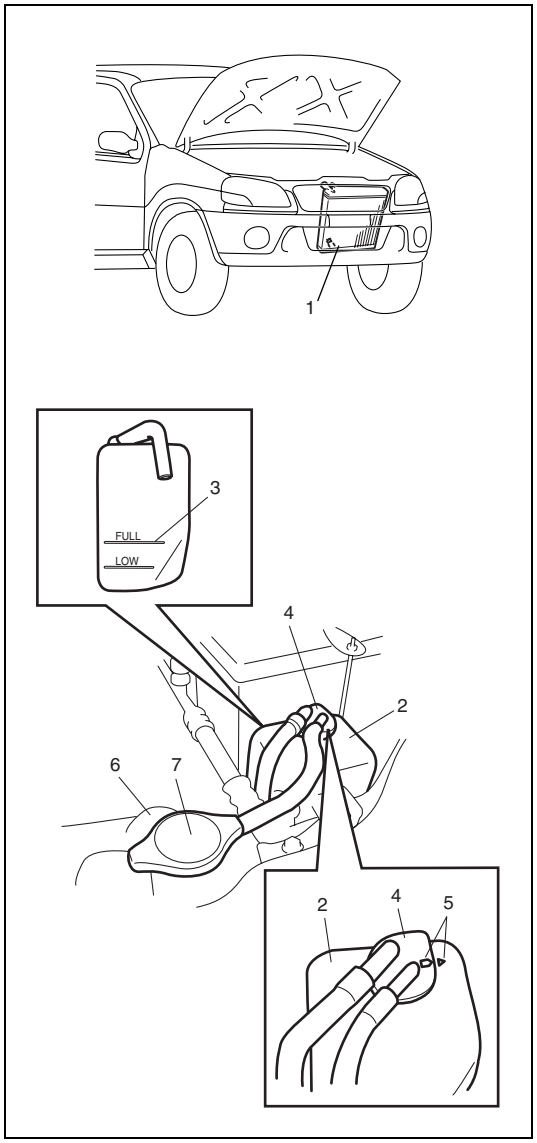

1) Be sure to tighten drain plug (1) securely.
2) Add coolant that is a mixture of good quality ethylene glycol antifreeze and water to radiator and reservoir tank (2). For coolant concentration, referring to “COOLANT”.
   Fill radiator to the bottom of filler neck and reservoir tank (2) to FULL level mark (3).
3) Reinstall reservoir tank cap (4) and align match marks (5) on reservoir tank (2) and its tank cap (4).
4) Run engine with radiator cap (7) removed, until radiator inlet hose (6) is hot.
5) With engine idling, add coolant to radiator until level reaches the bottom of filler neck.
6) Install radiator cap (7) make sure that the ear of radiator cap (7) lines is parallel to radiator.

COOLING WATER PIPES OR HOSES

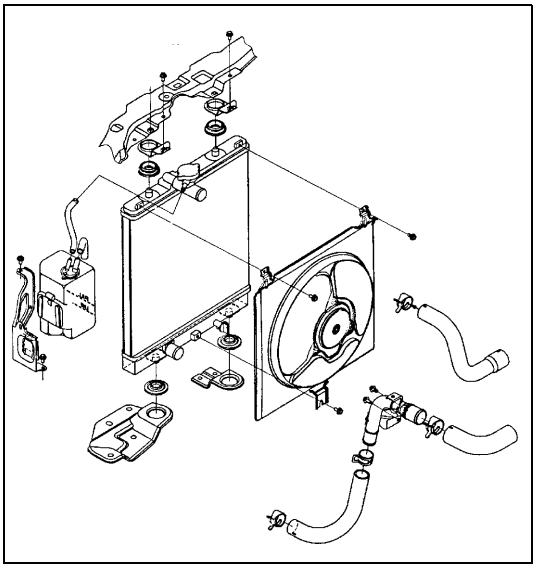

REMOVAL

1) Drain cooling system.
2) To remove these pipes or hoses, loosen clamp on each hose and pull hose end off.

INSTALLATION

Install removed parts in reverse order of removal procedure, noting the following.

- Tighten each clamp securely.
- Refill cooling system with proper coolant referring to “COOLING SYSTEM REFILL”.

THERMOSTAT

REMOVAL

1) Drain cooling system by loosening drain plug of radiator referring to “COOLING SYSTEM DRAINING”.
2) Remove air cleaner assembly and resonator referring to section 6A1
3) Remove intake manifold referring to Section 6A1.
4) Remove generator referring to Section 6H.

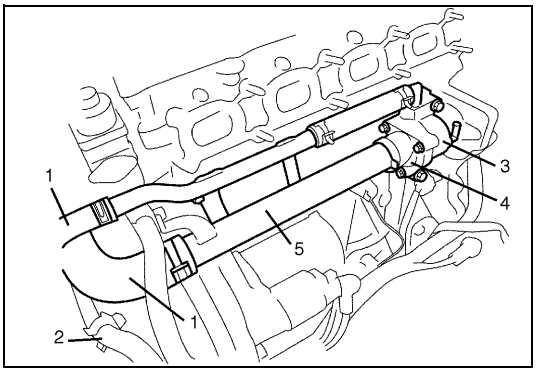

5) Disconnect water hose (1) and heater hose (2) from each pipe.
6) Remove thermostat case (3) with thermostat cap (4) and water inlet pipe (5).
7) Remove water inlet pipe with thermostat cap from thermostat case.
8) Remove thermostat.

INSPECTION

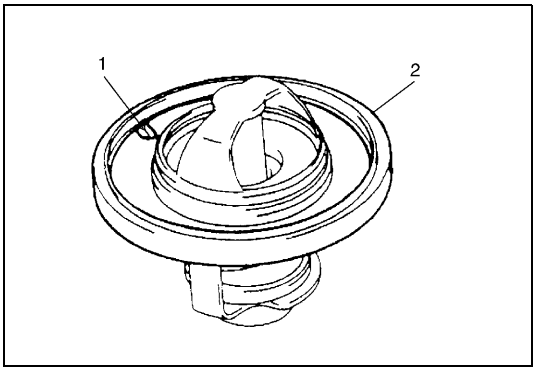

- Make sure that air bleed valve (1) of thermostat is clean. Should this valve be clogged, engine would tend to overheat.
- Check to make sure that valve seat is free from foreign matters which would prevent valve from seating tight.
- Check thermostat seal (2) for breakage, deterioration or any other damage.

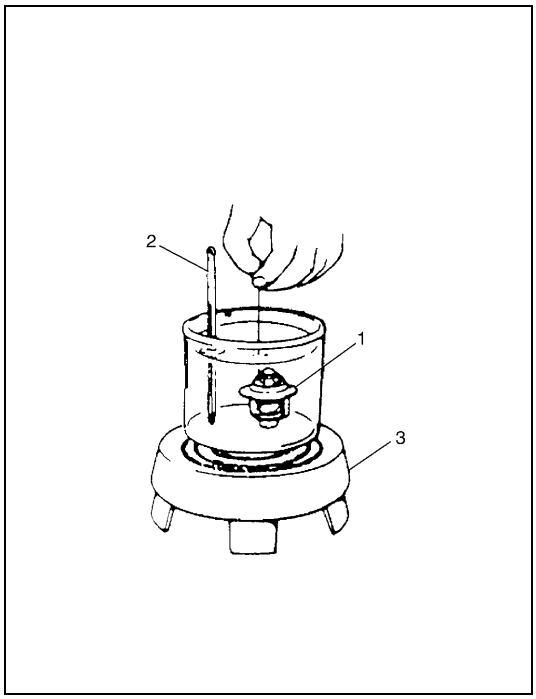

- Check thermostatic movement of wax pellet as follows :

a) Immerse thermostat (1) in water, and heat water gradually.
b) Check that valve starts to open at specific temperature.

Temperature at which valve begins to open
: 80 – 84°C (176 – 183°F)

Temperature at which valve become fully open
: 95 – 97°C (203°F)

Valve lift
: More than 8 mm at 95°C (203°F)

If valve starts to open at a temperature substantially below or above specific temperature, thermostat unit should be replaced with a new one. Such a unit, if reused, will bring about overcooling or overheating tendency.

2. Thermometer
3. Heater

INSTALLATION

Reverse removal procedure for installation noting the following points.

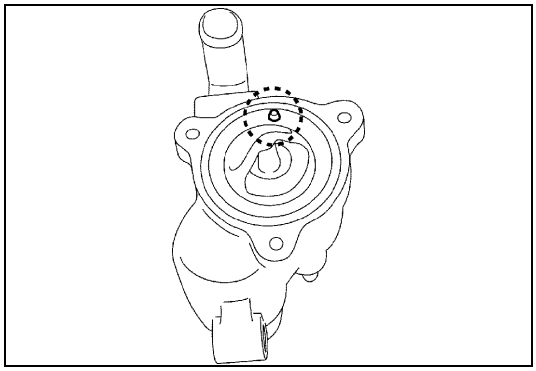

- When positioning thermostat (1) on thermostat case (2), be sure to position it so that air bleed valve (3) comes at position as shown in figure.

- Use new O-rings when installing.
- Adjust water pump belt tension referring to WATER PUMP/ GENERATOR DRIVE BELT TENSION INSPECTION AND ADJUSTMENT in this section.
- Adjust A/C compressor belt tension (if equipped) referring to Section 1B.
- Refill cooling system with proper coolant referring to “COOLING SYSTEM REFILL”.
- Verify that there is no coolant leakage at each connection.

RADIATOR

REMOVAL

1) Disconnect negative cable at battery.
2) Drain cooling system by loosening drain plug of radiator. Refer to “COOLING SYSTEM DRAINING”.
3) Disconnect connector of cooling fan motor.

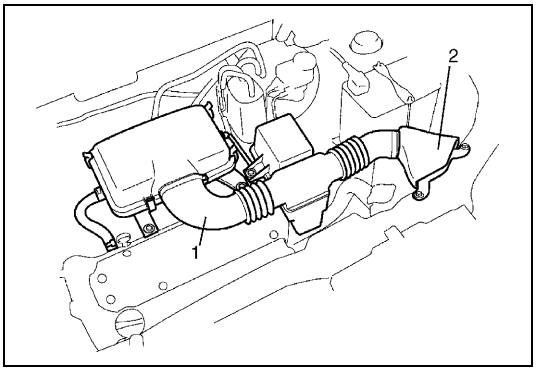

4) Remove air cleaner inlet hose (1) and suction pipe (2).

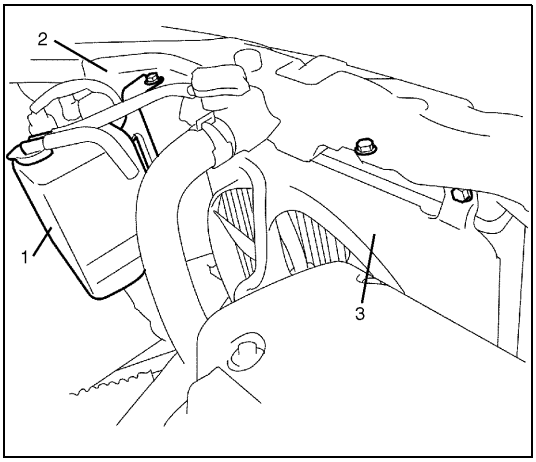

5) Remove reservoir tank (1) and then its bracket (2).
6) Disconnect radiator inlet and outlet hoses from radiator.
7) Remove cooling fan assembly (3).
8) Remove radiator.

INSPECTION

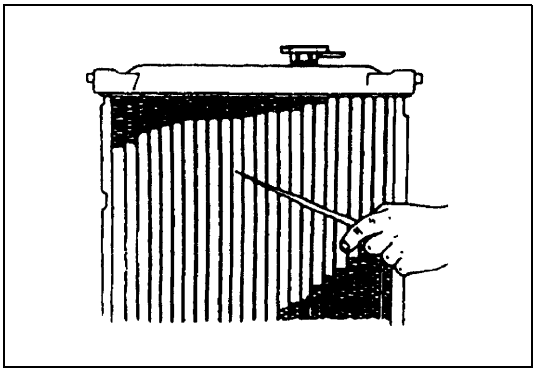

Check radiator for leakage or damage. Straighten bent fins, if any.

CLEANING

Clean frontal area of radiator cores.

INSTALLATION

Reverse removal procedures, noting the followings.

- Refill cooling system with proper coolant referring to “COOLING SYSTEM REFILL”.
- After installation, check each joint for leakage.

RADIATOR AND CONDENSER COOLING FAN

Refer to “RADIATOR AND CONDENSER COOLING FAN” in Section 1B for removal, inspection and installation.

RADIATOR AND CONDENSER COOLING FAN RELAY

INSPECTION

1) Disconnect negative (–) cable at battery.
2) Remove radiator and condenser cooling fan relay No.1 (1), No.2 (2) and No.3 (3) from vehicle.
3) Check that there is no continuity between terminal “c” and “b”. If there is continuity, replace relay.
4) Connect battery positive (+) terminal to terminal “b” of relay.
   Connect battery negative (–) terminal “a” of relay.
   Check continuity between terminal “c” and “d”.
   If there is no continuity when relay is connected to the battery, replace relay.

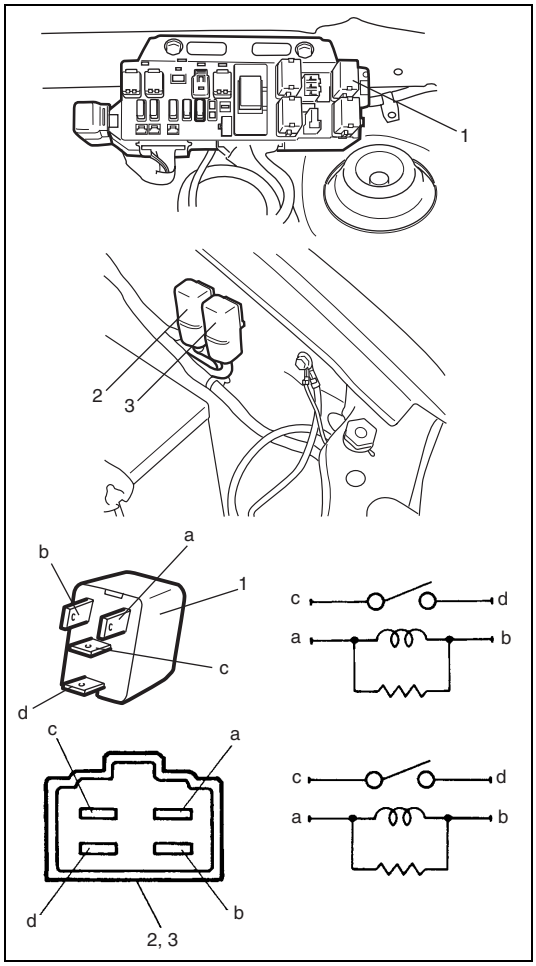

WATER PUMP/GENERATOR DRIVE BELT

REMOVAL

1) Disconnect negative cable at battery.
2) Loosen drive belt adjusting bolt (2) and generator pivot bolt (3).
   When servicing car equipped with A/C, remove compressor drive belt (4) before removing water pump belt (1).
   Refer to “COMPRESSOR DRIVE BELT” in Section 1B.
3) Slacken belt by displacing generator and then remove it.

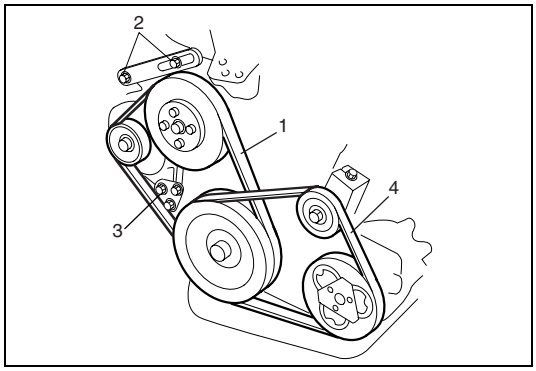

INSTALLATION

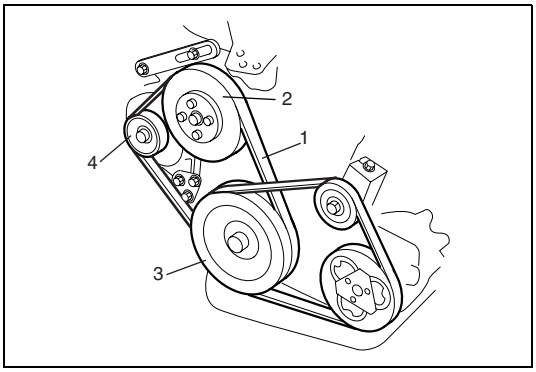

1) Install belt (1) to water pump pulley (2), crankshaft pulley (3) and generator pulley (4).
   When servicing car equipped with A/C, install compressor drive belt, too.

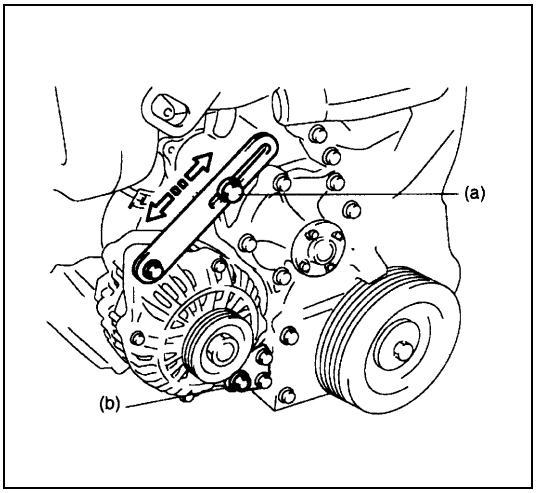

2) Adjust belt tension by referring to "WATER PUMP/GENERATOR DRIVE BELT TENSION INSPECTION AND ADJUSTMENT" in this section.
   For adjustment of compressor drive belt tension, refer to COMPRESSOR DRIVE BELT in Section 1B.
3) Tighten water pump belt adjusting bolt and pivot bolt to specified torque.

   Tightening torque
   Generator adjusting bolt (a) : 23 N·m (2.3 kg-m, 17.0 lb-ft)
   Generator pivot bolt (b) : 50 N·m (5.0 kg-m, 36.0 lb-ft)

4) Connect negative cable at battery.

WATER PUMP BELT TENSION INSPECTION AND ADJUSTMENT

For this inspection or adjustment, refer to "WATER PUMP GENERATOR DRIVE BELT TENSION INSPECTION AND ADJUSTMENT".

WATER PUMP

REMOVAL

1) Disconnect negative cable at battery.
2) Drain coolant. Refer to "COOLING SYSTEM DRAINING".

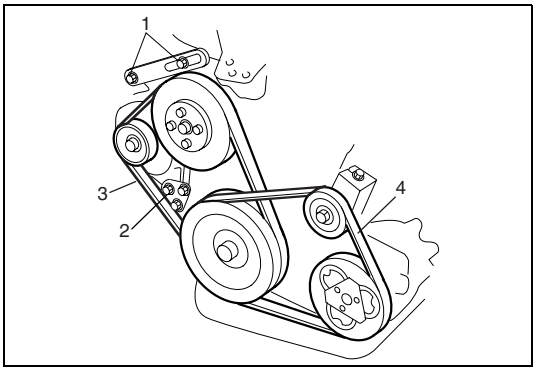

3) Remove A/C compressor belt (4) by referring to "COMPRESSOR DRIVE BELT" in Section 1B. (if equipped).
4) Loosen water pump/generator drive belt adjusting bolt (1) and generator pivot bolt (2). Then remove water pump/generator drive belt (3) and water pump pulley.
   Refer to "WATER PUMP BELT" in this section.

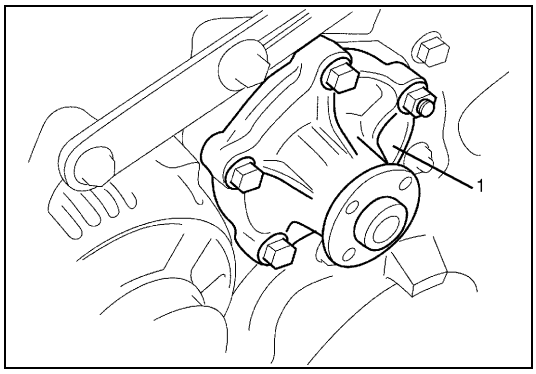

5) Remove water pump assembly (1).

INSPECTION

CAUTION:
Do not disassemble water pump.
If any repair is required on pump, replace it as assembly.

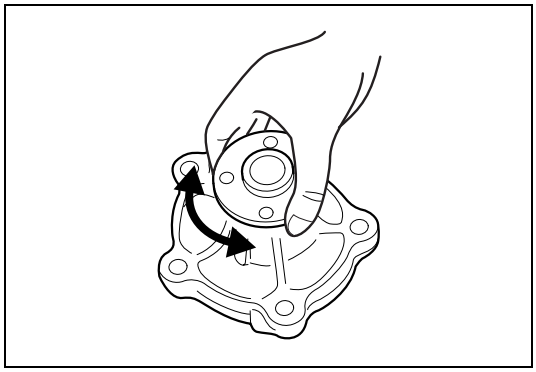

- Rotate water pump by hand to check for smooth operation. If pump does not rotate smoothly or makes abnormal noise, replace it.

INSTALLATION

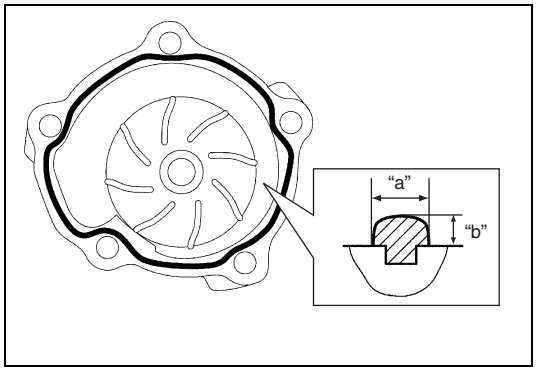

1) Apply sealant to mating surface of water pump as shown in figure.

"A" : Sealant 99000-31150

Sealant quantity (to mating surface of water pump)
Width "a" : 3mm (0.12 in.)
Height "b" : 2mm (0.08 in.)

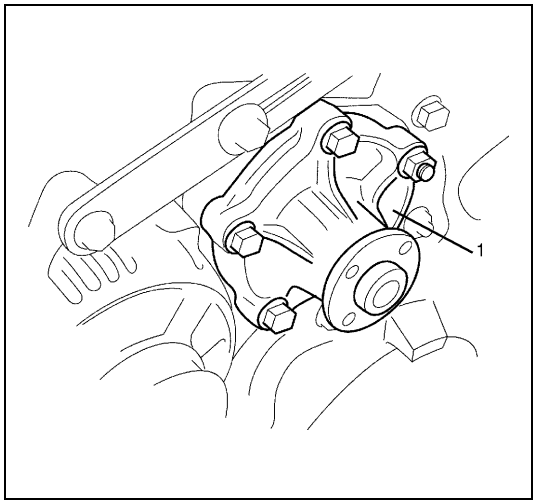

2) Install water pump assembly (1) to cylinder block and tighten bolts and nut to specified torque.

Tightening torque
Water pump bolts and nut (a) : 22 N·m (2.2 kg-m, 16.0 lb-ft)

3) Install water pump pulley.
4) Install water pump/generator drive belt. Refer to "WATER PUMP/GENERATOR DRIVE BELT" in this Section.
5) Install A/C compressor belt (if equipped). Refer to "COMPRESSOR DRIVE BELT" in Section 1B.
6) Fill coolant. Refer to "COOLING SYSTEM REFILL".
7) Connect negative cable at battery.
8) Check each part for leakage.

ECT SENSOR

Refer to “ECT SENSOR” in Section 6E1.

REQUIRED SERVICE MATERIAL

Material	Recommended SUZUKI product (Part Number)	Use
Ethylene glycol base coolant (Anti-freeze/ Anti-corrosion coolant)	—	Additive to engine cooling system for improving cooling efficiency and for protection against rusting.
Sealant	SUZUKI BOND NO. 1207C (99000-31150)	To apply to mating surface of water pump

TIGHTENING TORQUE SPECIFICATION

Fastening part	Tightening torque		
	N•m	kg-m	lb-ft
Generator adjusting bolt	23	2.3	17
Generator pivot bolt	50	5	36
Water pump bolt and Nuts	22	2.2	16

SECTION 6C

ENGINE FUEL

WARNING:

For vehicles equipped with Supplemental Restraint (Air Bag) System:

- **Service on and around the air bag system components or wiring must be performed only by an authorized SUZUKI dealer. Refer to "Air Bag System Components and Wiring Location View" under "General Description" in air bag system section in order to confirm whether you are performing service on or near the air bag system components or wiring. Please observe all WARNINGS and "Service Precautions" under "On-Vehicle Service" in air bag system section before performing service on or around the air bag system components or wiring. Failure to follow WARNINGS could result in unintentional activation of the system or could render the system inoperative. Either of these two conditions may result in severe injury.**
- **Technical service work must be started at least 90 seconds after the ignition switch is turned to the "LOCK" position and the negative cable is disconnected from the battery. Otherwise, the system may be activated by reserve energy in the Sensing and Diagnostic Module (SDM).**

CAUTION:

The engine of this vehicle requires the use of unleaded fuel only. Use of leaded and/or low lead fuel can result in engine damage and reduce the effectiveness of the emission control system.

CONTENTS

GENERAL DESCRIPTION 6C-1
ON-VEHICLE SERVICE 6C-2
COMPONENTS 6C-2
PRECAUTIONS 6C-3
FUEL LINES 6C-4
FUEL PIPE 6C-4
FUEL FILLER CAP 6C-5
FUEL TANK INLET VALVE 6C-6
FUEL TANK 6C-7
FUEL PUMP ASSEMBLY 6C-10
DISASSEMBLY AND REASSEMBLY 6C-12
SPECIAL TOOL 6C-14
TIGHTENING TORQUE SPECIFICATION 6C-14

GENERAL DESCRIPTION

The main components of the fuel system are fuel tank, fuel pump assembly (with fuel filter, fuel level gauge, fuel pressure regulator and tank pressure control valve), fuel/vapor separator fuel feed line and fuel vapor line.
For the details of fuel flow and fuel vapor flow, refer to "GENERAL DESCRIPTION" in Section 6E.

ON-VEHICLE SERVICE

COMPONENTS

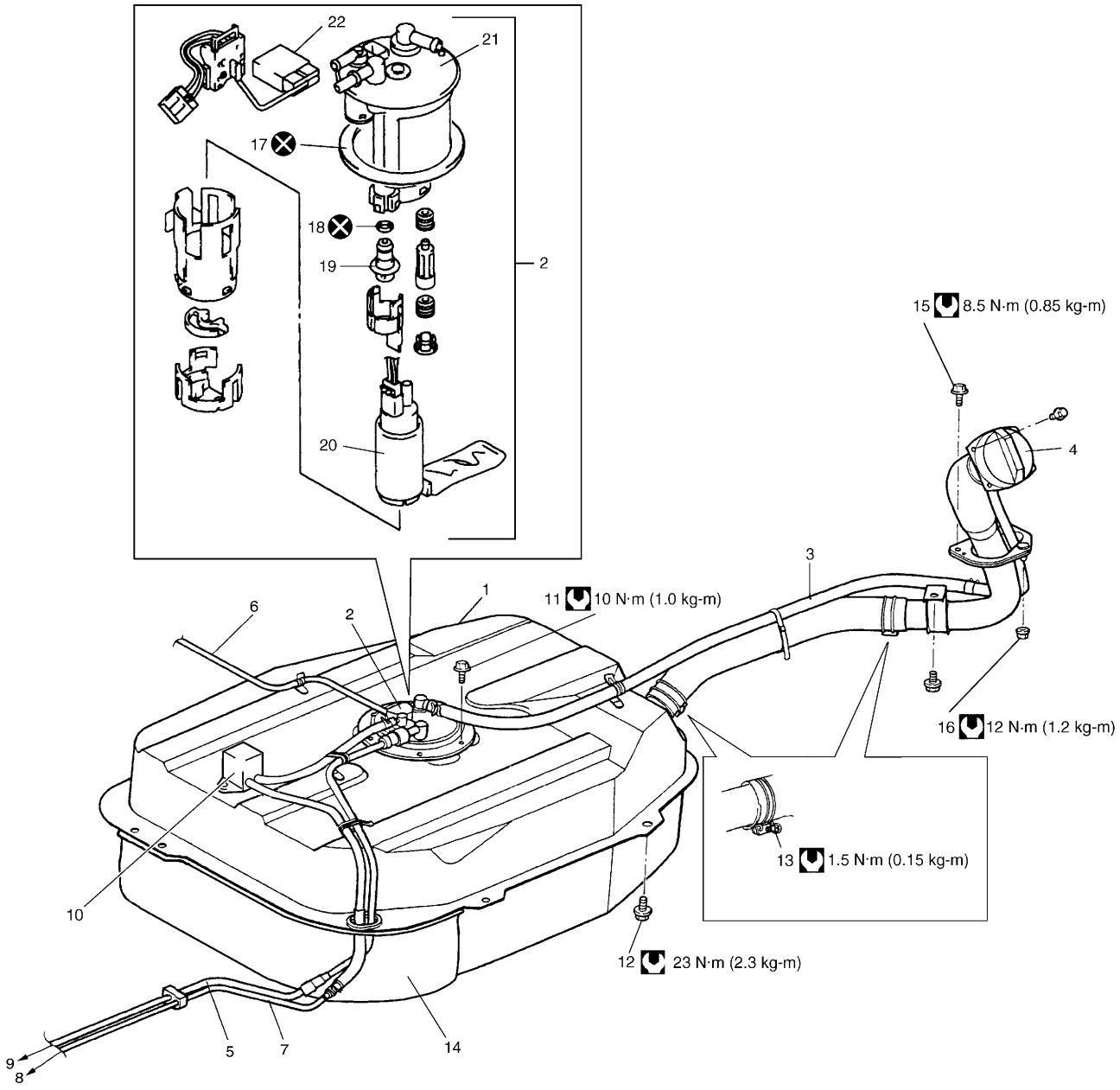

1. Fuel tank	7. Fuel vapor line	13. Fuel filler hose clamp screw	19. Fuel pressure regulator
2. Fuel pump assembly	8. EVAP canister	14. Tank cover	20. Fuel pump
3. Breather hose	9. Delivery pipe	15. Fuel filler bracket screw	21. Fuel filter assembly
4. Fuel filler cap	10. Fuel/vapor separator	16. Fuel filler bracket nut	22. Fuel level gauge (Fuel sender gauge)
5. Fuel feed line	11. Fuel pump bolt (6 pcs.)	17. Gasket	⊗ Do not reuse.
6. Wire harness for fuel pump	12. Fuel tank bolt (4 pcs.)	18. O-ring	Tightening torque

PRECAUTIONS

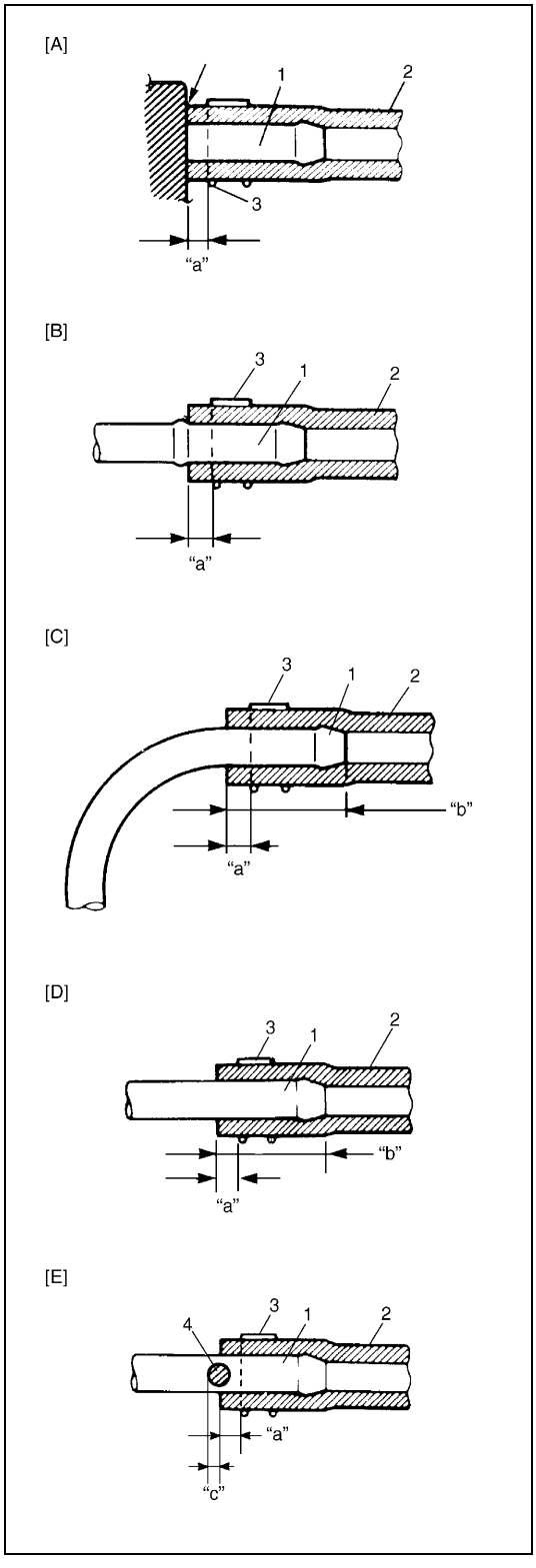

WARNING:

Before attempting service of any type on fuel system, the followings should be always observed in order to reduce the risk or fire and personal injury.

- **Disconnect negative cable at battery.**
- **Do not smoke, and place no smoking signs near work area.**
- **Be sure to have CO_2 fire extinguisher handy.**
- **Be sure to perform work in a well-ventilated area and away from any open flames (such as gas hot heater).**
- **Wear safety glasses.**
- **To relieve fuel vapor pressure in fuel tank, remove fuel filler cap from fuel filler neck and then reinstall it.**
- **As fuel feed line is still under high fuel pressure even after engine was stopped, loosening or disconnecting fuel feed line directly may cause dangerous spout of fuel to occur where loosened or disconnected.**
  Before loosening or disconnecting fuel feed line, make sure to relieve fuel pressure "FUEL PRESSURE RELIEF PROCEDURE" in Section 6.
- **A small amount of fuel may be released after the fuel line is disconnected. In order to reduce the chance of personal injury, cover the fitting to be disconnected with a shop cloth. Be sure to put that cloth in an approved container when disconnection is completed.**
- **Note that fuel hose connection varies with each type of pipe. Be sure to connect and clamp each hose correctly referring to the figure.**

[A] :	With short pipe, fit hose as far as it reaches pipe joint as shown.
[B] :	With the following type pipe, fit hose as far as its peripheral projection as shown.
[C] :	With bent pipe, fit hose as far as its bent part as shown or till depth "b".
[D] :	With straight pipe, fit hose till depth "b".
[E] :	With red marked pipe, fit hose end reaches red mark on pipe.
1.	Pipe
2.	Hose
3.	Clamp
4.	Ped mark
"a" :	Clamp securely at a position 3 to 7 mm (0.12 – 0.27 in.) from hose end.
"b" :	20 to 30 mm (0.79 – 1.18 in.)
"c" :	0 to 5 mm (0 – 0.19 in.)

FUEL LINES

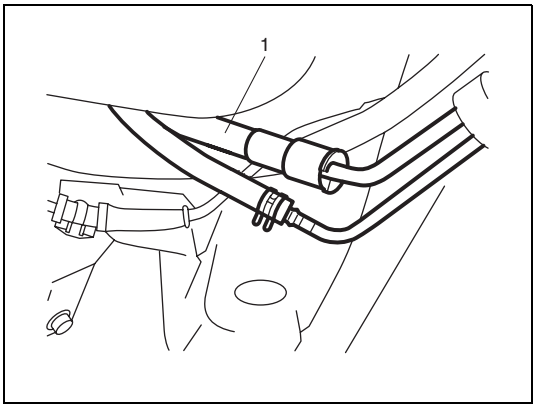

CAUTION:
Due to the fact that fuel feed line (1) is under high pressure, use special care when servicing it.

INSPECTION

Visually inspect fuel lines for evidence of fuel leakage, hose crack and deterioration, or damage.
Make sure all clamps are secure.
Replace parts as needed.

FUEL PIPE

WARNING:
A small amount of fuel may be released after fuel hose is disconnected. In order to reduce the chance of personal injury, cover hose and pipe to be disconnected with a shop cloth.
Be sure to put that cloth in an approved container when disconnection is completed.

REMOVAL

1) Relieve fuel pressure in fuel feed line according to "FUEL PRESSURE RELIEF PROCEDURE" in Section 6.
2) Disconnect negative cable at battery.
3) Disconnect fuel pipe joint and fuel hose from fuel pipe at the front and rear of each fuel pipe.
   For quick joint (2), disconnect it as follows :
   a) Remove mud, dust and/or foreign material between pipe (1) and joint by blowing compressed air.
   b) Unlock joint lock by inserting special tool between pipe and joint.

   Special tool
   (A) : 09919-47020

   c) Disconnect joint (2) from pipe (1).

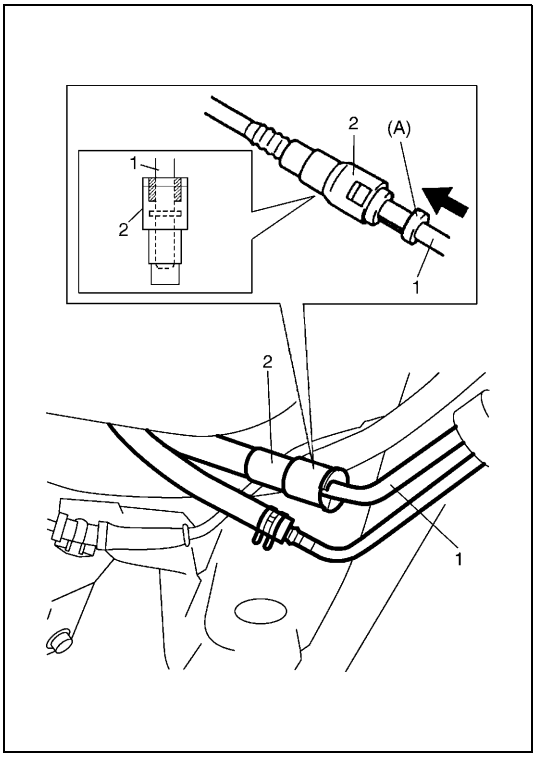

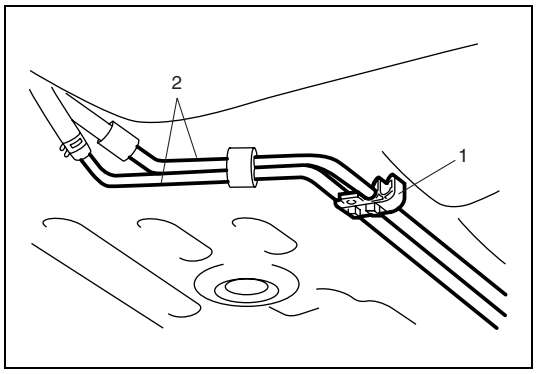

4) Mark the location of clamps (1) on fuel pipes (2), so that the clamps can be reinstalled to where they were.
5) Remove pipes (2) with clamp (1) from vehicle.
6) Remove clamp (1) from pipes (2).

INSTALLATION

1) Install clamps to marked location on pipes. If clamp is deformed or its claw is bent or broken, replace it with new one.
2) Install pipes with pipe clamps to vehicle.
3) Connect fuel hoses and pipes to each pipe.

CAUTION:
When connecting joint, clean outside surfaces of pipe where joint is to be inserted, push joint into pipe till joint lock clicks and check to ensure that pipes are connected securely, or fuel leak may occur.

4) With engine OFF, turn ignition switch to ON position and check for fuel leaks.

FUEL FILLER CAP

INSPECTION

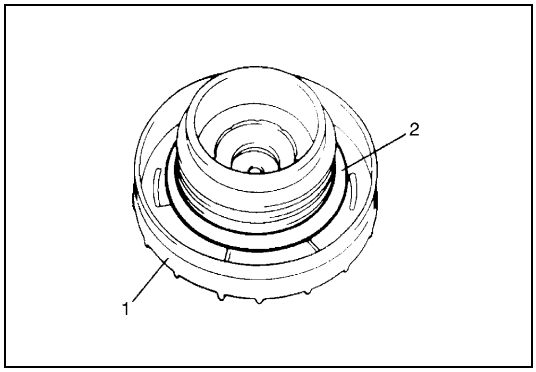

Remove cap (1), and check gasket for even filler neck imprint, and deterioration or any damage. If gasket (2) is in malcondition, replace cap.

NOTE:
If cap requires replacement, only a cap with the same features should be used. Failure to use correct cap can result in critical malfunction of system.

FUEL TANK INLET VALVE

WARNING:

Refer to the WARNING at the beginning of ON-VEHICLE SERVICE in this section.

REMOVAL

1) Remove fuel filler cap.

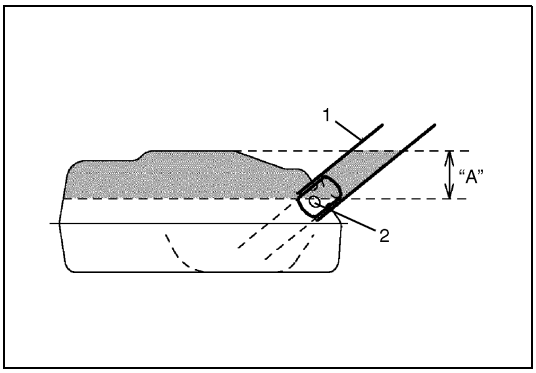

2) Insert hose of a hand operated pump into fuel filler hose (1) and drain fuel in space "A" in the figure.

CAUTION:

Do not force pump hose into fuel tank, or pump hose may damage fuel tank inlet valve (2).

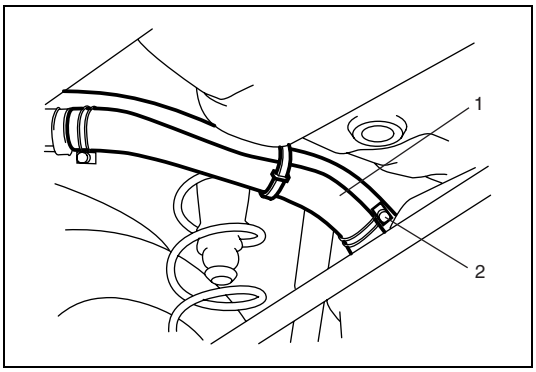

3) Hoist vehicle and remove clamp (2) and fuel filler hose (1) from fuel tank.

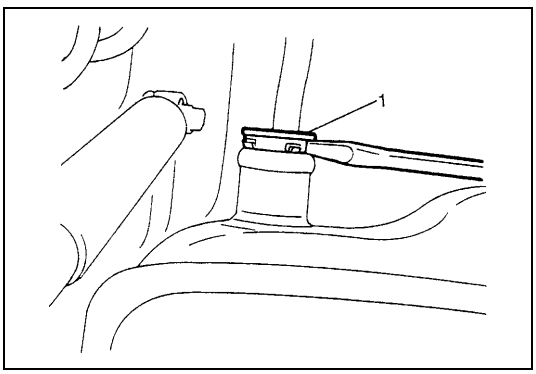

4) Remove fuel tank inlet valve (1) using flat-bladed screwdriver.

CAUTION:

Be careful not to damage fuel tank inlet valve (1) with flat-bladed screwdriver.

INSPECTION

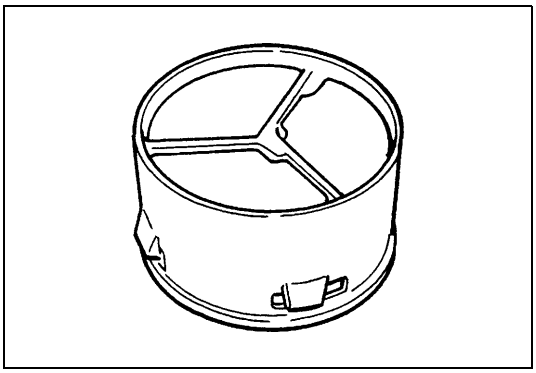

Check fuel tank inlet valve for the followings.

- Damage
- Smooth opening and closing

If any damage or malfunction is found, replace.

INSTALLATION

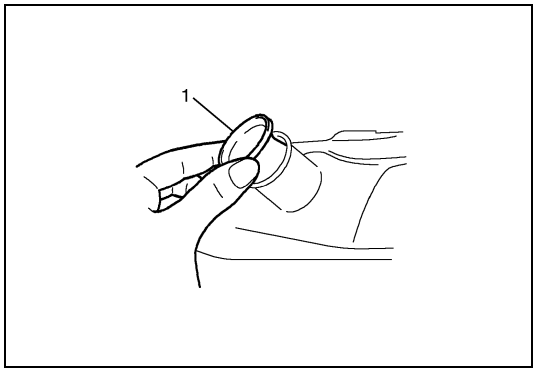

1) Install fuel tank inlet valve (1) to fuel tank.

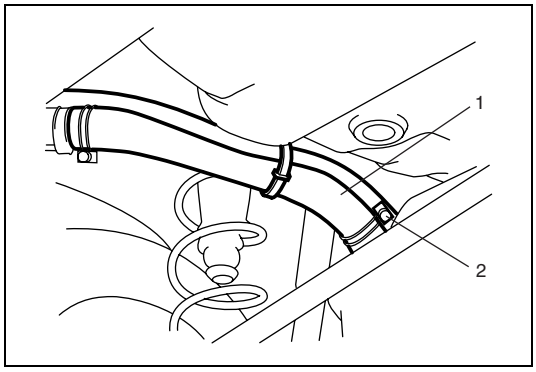

2) Install fuel filler hose (1) to fuel tank and secure it with clamp (2).
   For proper installation, refer to “COMPONENTS” under “ON-VEHICLE SERVICE”.
3) Lower vehicle and install fuel filler cap.

FUEL TANK

REMOVAL

WARNING:

Before starting the following procedure, be sure to observe “PRECAUTIONS”.

1) Relieve fuel pressure in fuel feed line according to “FUEL PRESSURE RELIEF PROCEDURE” in Section 6.
2) Disconnect negative cable at battery.
3) Hoist vehicle.

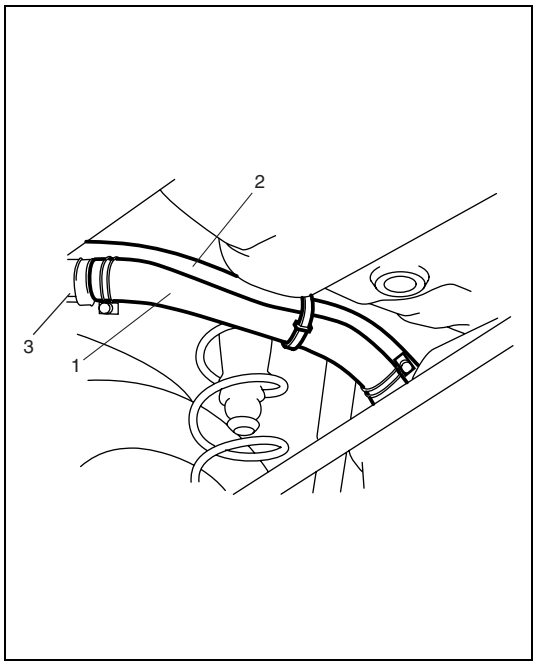

4) Disconnect fuel filler hose (1) and breather hose (2) from filler neck (3).

CAUTION:

Never disconnect fuel filler hose (1) from fuel tank inlet. If half or more of fuel is remaining to fuel tank, fuel over flows in this case and come out.

5) Due to absence of fuel tank drain plug, drain fuel tank by pumping fuel out through fuel tank filler.
   Use hand operated pump device to drain fuel tank.

CAUTION:

- **Do not force pump hose into fuel tank, or pump hose may damage fuel tank inlet valve.**
- **Never drain or store fuel in an open container due to possibility of fire or explosion.**

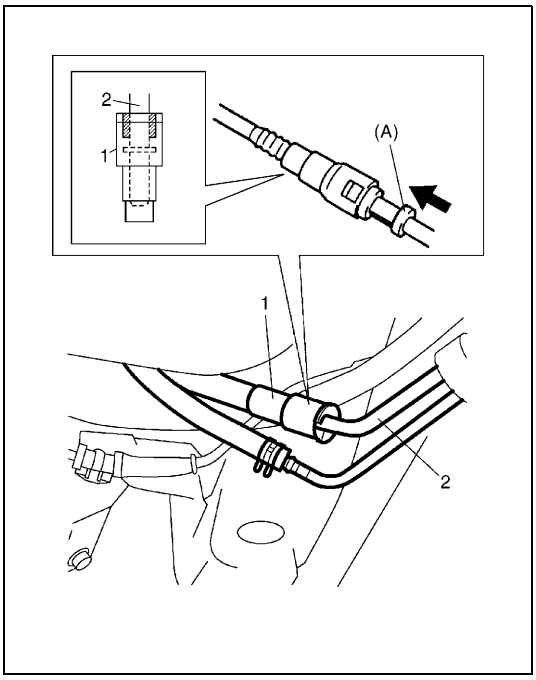

6) Disconnect fuel pipe joint and fuel hoses from pipes.
   For quick joint, disconnect it as follows :
   a) Remove mud, dust and/or foreign material between pipe and joint by blowing compressed air.
   b) Unlock joint (1) lock by inserting special tool between pipe (2) and joint (1).

Special tool
(A) : 09919-47020

   c) Disconnect joint from pipe.

WARNING:
A small amount of fuel may be released after the fuel hose is disconnected. In order to reduce the chance of personal injury, cover the hose and pipe to be disconnected with a shop cloth. Be sure to put that cloth in an approved container when disconnection is completed.

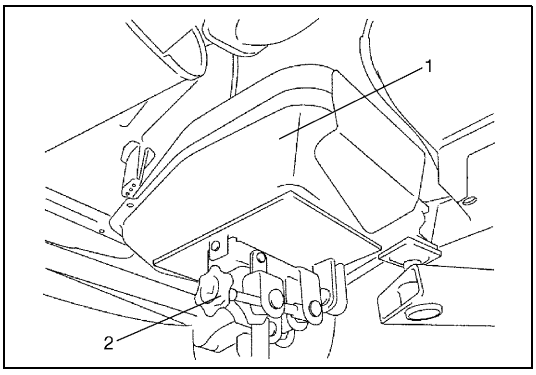

7) Support fuel tank (1) with jack (2) and remove its mounting bolts.

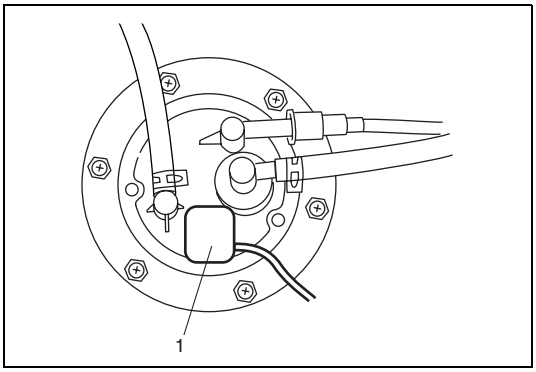

8) Lower fuel tank a little as to disconnect wire harness at connector (1), then remove fuel tank.

INSPECTION

After removing fuel tank, check hoses and pipes connected to fuel tank for leaks, loose connections, deterioration or damage. Also check fuel pump assembly gaskets for leaks, visually inspect fuel tank for leaks and damage.
Replace any damaged or malconditioned parts.

FUEL TANK PURGING PROCEDURE

WARNING:

This purging procedure will not remove all fuel vapor. Do not attempt any repair on tank using heat of flame as an explosion resulting in personal injury could occur.

The following procedure is used for purging fuel tank.

1) After removing fuel tank, remove all hoses, pipes, fuel pump assembly from fuel tank.
2) Drain all remaining fuel from tank.
3) Move tank to flushing area.
4) Fill tank with warm water or tap water, and agitate vigorously and drain. Repeat this washing until inside of tank is clean. Replace tank if its inside is rusty.
5) Completely flush out remaining water after washing.

CAUTION:

Never remain water in fuel tank after washing, or fuel tank inside will get corrosion.

INSTALLATION

1) If parts have been removed from fuel tank, install them before installing fuel tank to vehicle.

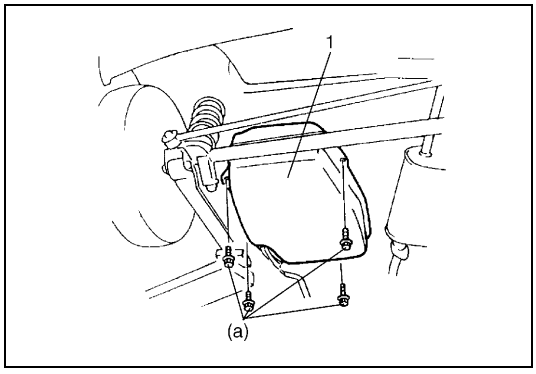

2) Raise fuel tank (1) with jack and connect connector of fuel pump and gauge and clamp wire harness.
3) Install fuel tank to vehicle.

Tightening torque
Fuel tank bolt (a) : 23 N·m (2.3 kg-m, 17.0 lb-ft)

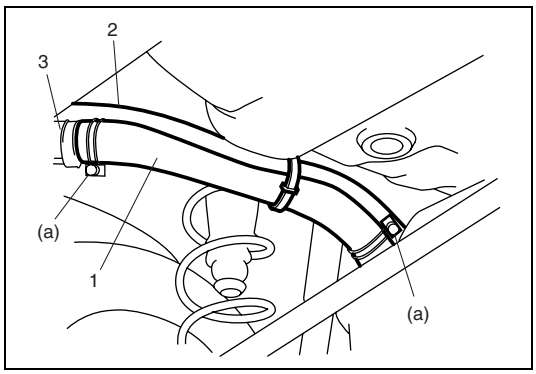

4) Connect fuel filler hose (1) and breather hose (2) to filler neck (3) as shown in figure and clamp them securely.

Tightening torque
Fuel filler hose clamp (a) : 1.5 N·m (0.15 kg-m, 1.0 lb-ft)

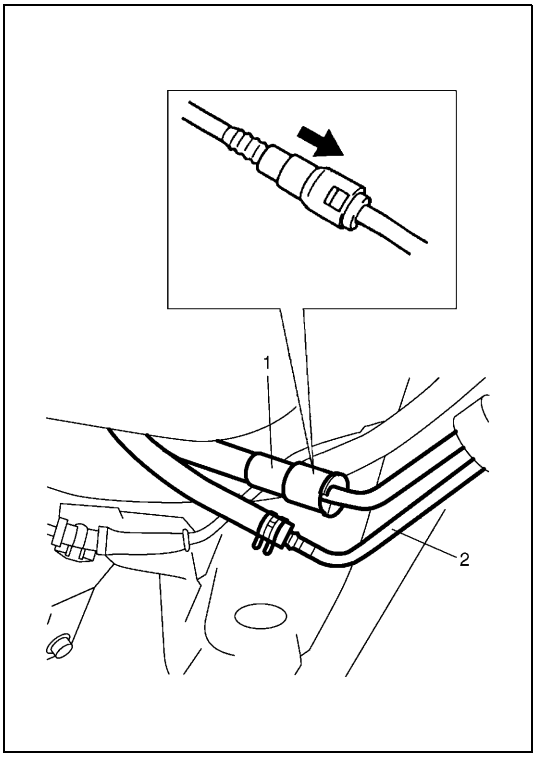

5) Connect fuel feed hose (1) and vapor hose (2) to each pipe as shown in figure and clamp them securely.

CAUTION:
- **When connecting joint, clean outside surfaces of pipe where joint is to be inserted, push joint into pipe till joint lock clicks and check to ensure that pipes are connected securely, or fuel leak may occur.**
- **Never let the fuel hoses touch the ABS sensor harness (if equipped).**

6) Connect negative cable at battery.
With engine OFF, turn ignition switch to ON position and check for fuel leaks.

FUEL PUMP ASSEMBLY

WARNING:
Refer to the PRECAUTIONS at the beginning of ON-VEHICLE SERVICE.

REMOVAL

1) Remove fuel tank from vehicle. Refer to “FUEL TANK”.

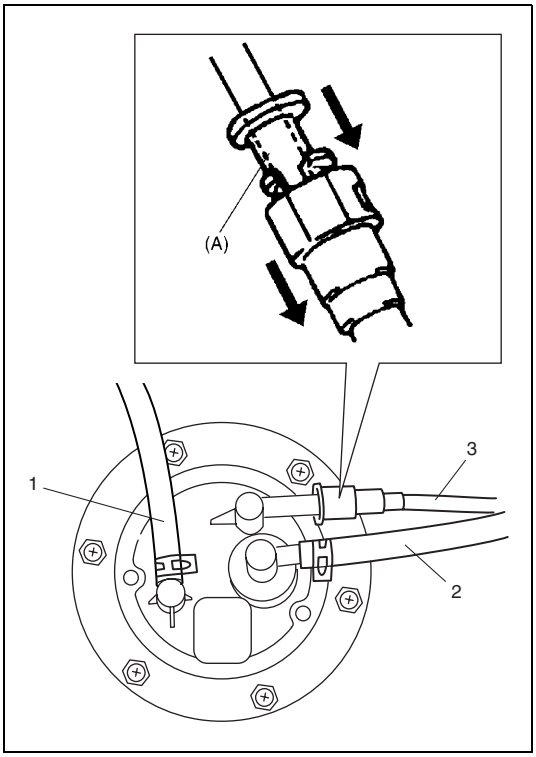

2) Disconnect fuel breather hose (1), fuel vapor hose (2) and pipes from fuel pump assembly.
When disconnecting joint of fuel feed line (3) from pipe, unlock joint by inserting special tool between pipe and joint lock first.

Special tool
(A) : 09919-47020

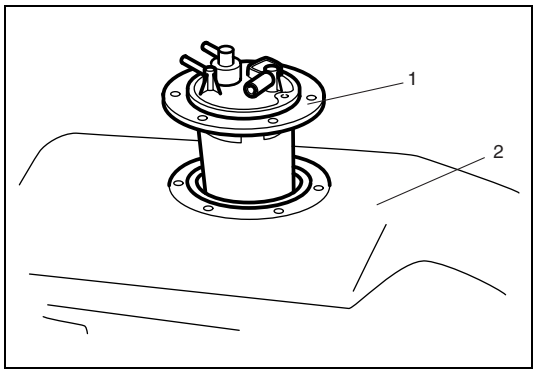

3) Remove fuel pump assembly (1) from fuel tank (2).

INSPECTION

- Check fuel pump assembly for damage.
- Check fuel suction filter (1) for evidence of dirt and contamination.
  If present, replace or clean and check for presence of dirt in fuel tank.
- For operation or electrical circuit inspection by referring to Section 6E1.
- For inspection of fuel level gauge (2) by referring to Section 8.
- Check tank pressure control valve referring to the following procedures.

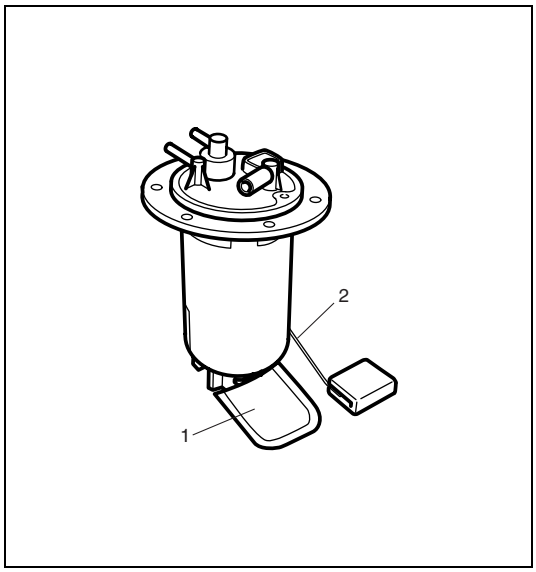

WARNING:

Do not such air through fuel vapor line hose. Fuel vapor inside valve is harmful.

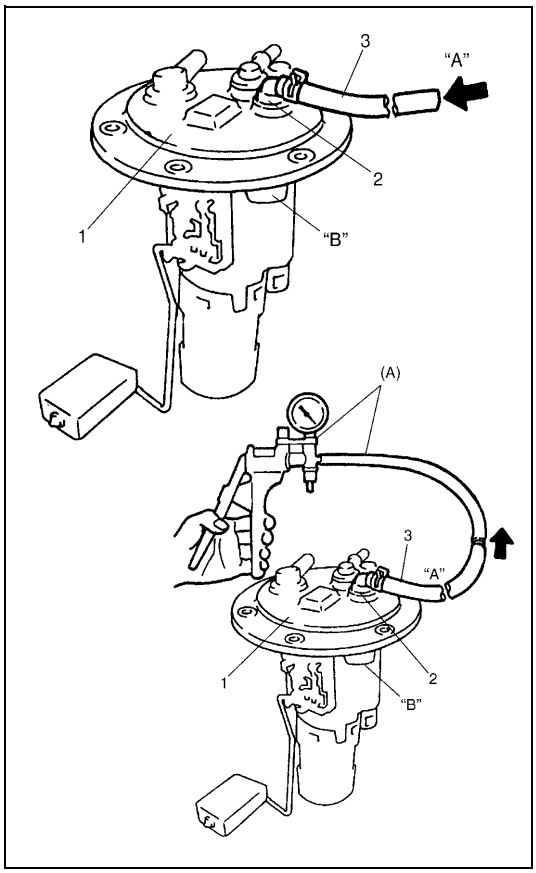

a) Air should pass through valve (2) smoothly from fuel vapor line hose (3) "A" to "B" when blown hard.
b) Also, when vacuum pump (4) is connected to fuel vapor hose and pump air through valve, air should pass from "B" to "A".

Special tool
(A) : 09917-47910

If air doesn't pass through valve in Step a) or vacuum is maintained in Step b), replace fuel filter assembly (1).

DISASSEMBLY AND REASSEMBLY

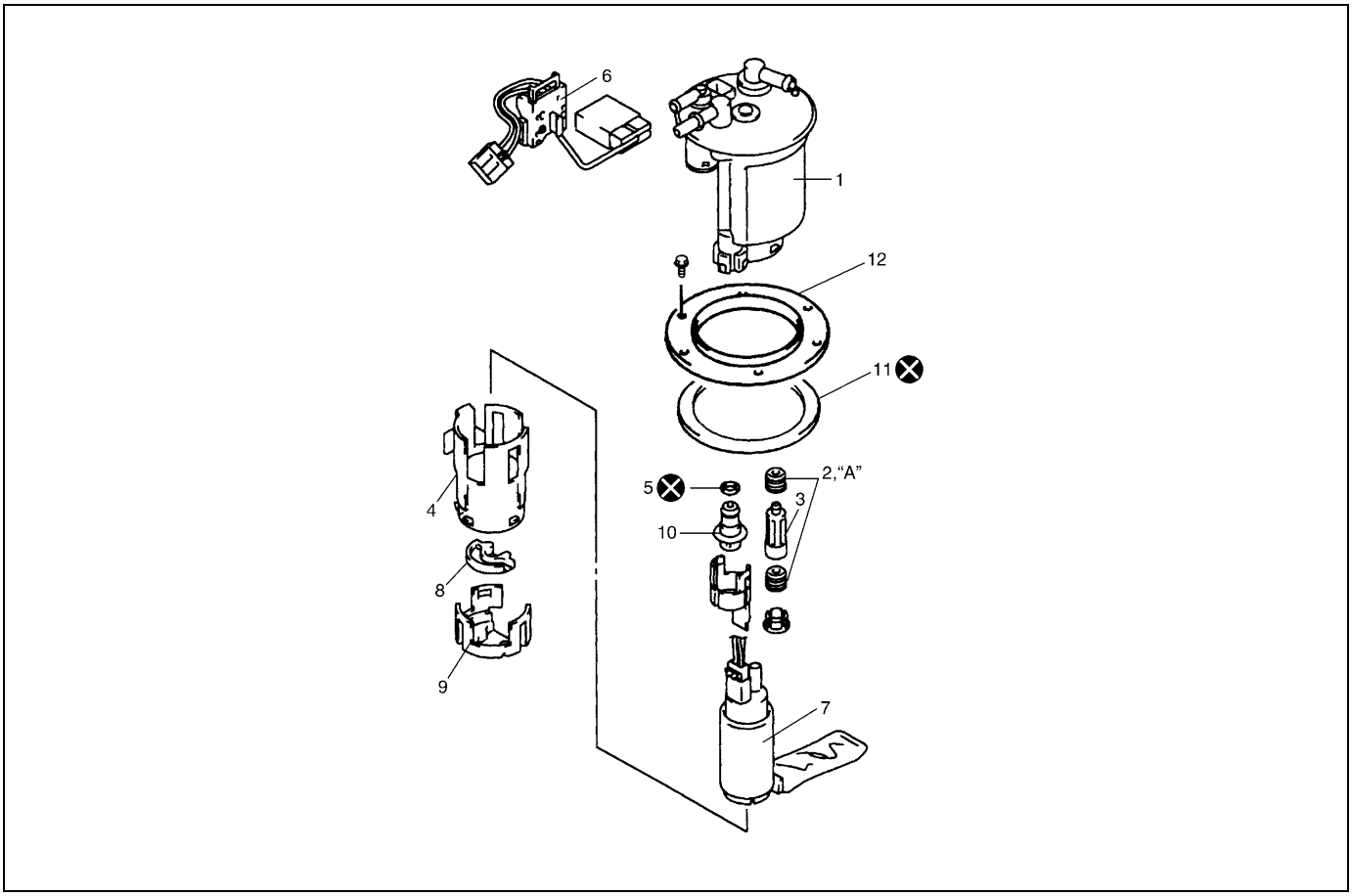

"A" : Apply oil	5. O-ring	10. Fuel pressure regulator
1. Fuel filter assembly (including check valve)	6. Fuel level sensor (Fuel sender gauge)	11. Gasket
2. Grommet	7. Fuel pump	12. Fuel pump plate
3. Tube	8. Cushion	⊗ Do not reuse.
4. Housing	9. Bracket	

Disassemble and reassemble fuel pump assembly, noting the followings.

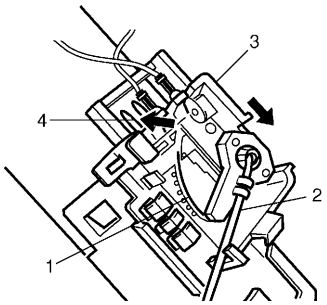

CAUTION:

- **While removing fuel level gauge, do not contact resistor plate (1) or deform arm (2). It may cause fuel level gauge to fail.**
- **When removing grommet from fuel tube or bracket sub assembly, be very careful not to cause damage to grommet installed section (sealed section in bore). Should it be damaged, replace it with new one, or fuel will leak from that part.**

- When removing fuel level sensor (3), press snap-fit part (4) and slide it in the arrow direction as shown in figure.
- When installing fuel level sensor to housing, fit fuel level sensor securely.

INSTALLATION

1) Clean mating surfaces of fuel pump assembly (1) and fuel tank.

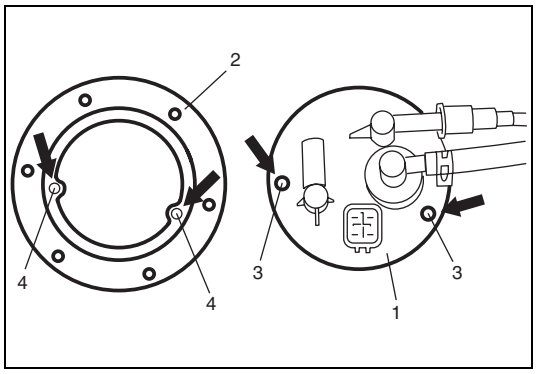

2) Put plate (2) on fuel pump assembly (1) by matching the protrusion of fuel pump assembly (3) to plate hole (4) as shown.

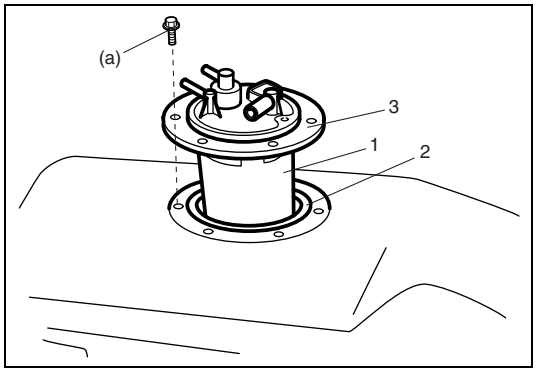

3) Install new gasket (2) and fuel pump assembly (1) with plate (3) to fuel tank.

Tightening torque
Fuel pump assembly bolts (a) : 10 N·m (1.0 kg-m, 7.5 lb-ft)

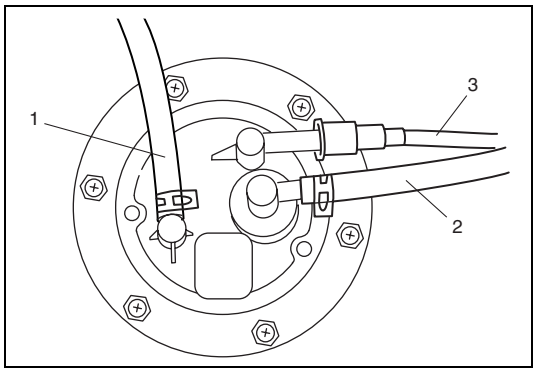

4) Connect fuel breather hose (1), fuel vapor hose (2) and fuel feed line (3) (pipe joint) to fuel pump assembly.

CAUTION:
When connecting joint, clean outside surface of pipe where joint is to be inserted, push joint into pipe till joint lock clicks and check to ensure that pipes are connected securely, or fuel leak may occur.

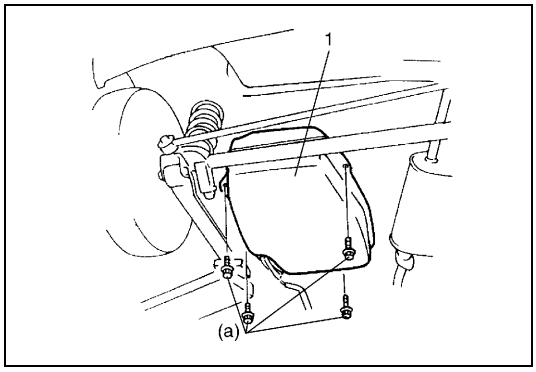

5) Install fuel tank (1) to vehicle. Refer to “FUEL TANK” in this section.

SPECIAL TOOL

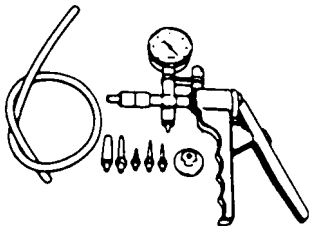	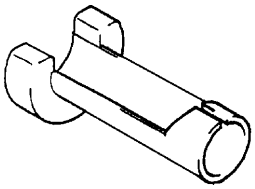
09917-47010 Vacuum pump gauge	09919-47020 Quick joint remover

TIGHTENING TORQUE SPECIFICATION

Fastening part	Tightening torque		
	N•m	kg-m	lb-ft
Fuel tank bolts	23	2.3	17
Fuel filler hose clamps	1.5	0.15	1
Fuel pump assembly bolts	10	1	7.5

SECTION 6E1

ENGINE AND EMISSION CONTROL SYSTEM

WARNING:

For vehicles equipped with Supplemental Restraint (Air Bag) System :

- **Service on and around the air bag system components or wiring must be performed only by an authorized SUZUKI dealer. Refer to "Air Bag System Components and Wiring Location View" under "General Description" in air bag system section in order to confirm whether you are performing service on or near the air bag system components or wiring. Please observe all WARNINGS and "Service Precautions" under "On-Vehicle Service" in air bag system section before performing service on or around the air bag system components or wiring. Failure to follow WARNINGS could result in unintentional activation of the system or could render the system inoperative. Either of these two conditions may result in severe injury.**
- **Technical service work must be started at least 90 seconds after the ignition switch is turned to the "LOCK" position and the negative cable is disconnected from the battery. Otherwise, the system may be activated by reserve energy in the Sensing and Diagnostic Module (SDM).**

NOTE:

Whether the following system (parts) are used in the particular vehicle or not depends on vehicle specifications. Be sure to bear this in mind when performing service work.

- **EGR valve**
- **Heated oxygen sensor(s) or CO adjusting resistor**
- **Three way catalytic converter**
- **Immobilizer indicator lamp**
- **Knock sensor**

CONTENTS

GENERAL DESCRIPTION 6E1-2
AIR INTAKE SYSTEM 6E1-5
FUEL DELIVERY SYSTEM 6E1-6
FUEL PUMP 6E1-6
ELECTRONIC CONTROL SYSTEM 6E1-7
ENGINE & EMISSION CONTROL INPUT/OUTPUT TABLE 6E1-8
ECM INPUT/OUTPUT CIRCUIT DIAGRAM 6E1-9
ECM TERMINAL ARRANGEMENT TABLE 6E1-13
ON-VEHICLE SERVICE 6E1-15
ACCELERATOR CABLE ADJUSTMENT 6E1-15
IDLE SPEED/IDLE AIR CONTROL (IAC) DUTY INSPECTION 6E1-15
IDLE MIXTURE INSPECTION / ADJUSTMENT (VEHICLE WITHOUT HEATED OXYGEN SENSOR) 6E1-17
AIR INTAKE SYSTEM 6E1-18
THROTTLE BODY 6E1-18
IDLE AIR CONTROL VALVE (IAC VALVE) 6E1-20
FUEL DELIVERY SYSTEM 6E1-21
FUEL PRESSURE INSPECTION 6E1-21
FUEL PUMP WITH PRESSURE REGULATOR 6E1-22
FUEL INJECTOR 6E1-23
ELECTRONIC CONTROL SYSTEM 6E1-27
ENGINE CONTROL MODULE (ECM) 6E1-27
MANIFOLD ABSOLUTE PRESSURE SENSOR (MAP SENSOR) 6E1-27
THROTTLE POSITION SENSOR (TP SENSOR) 6E1-28
INTAKE AIR TEMPERATURE SENSOR (IAT SENSOR) 6E1-29
ENGINE COOLANT TEMPERATURE SENSOR (ECT SENSOR) 6E1-30
HEATED OXYGEN SENSOR (HO2S-1 AND HO2S-2) 6E1-31
CAMSHAFT POSITION SENSOR 6E1-32

CRANKSHAFT POSITION SENSOR .. 6E1-32
VEHICLE SPEED SENSOR (VSS)..... 6E1-33
FUEL LEVEL SENSOR (GAUGE) 6E1-33
KNOCK SENSOR (IF EQUIPPED)..... 6E1-33
MAIN RELAY, FUEL PUMP RELAY AND RADIATOR FAN RELAY NO.1.... 6E1-33
FUEL CUT OPERATION 6E1-34
RADIATOR FAN CONTROL SYSTEM 6E1-34
RADIATOR FAN RELAY NO. 2 AND NO.3..... 6E1-34
OUTPUT SIGNALS OF THROTTLE VALVE OPENING AND ENGINE COOLANT TEMP. (VEHICLE WITH A/T ONLY) 6E1-36
EMISSION CONTROL SYSTEM..... 6E1-36
EGR SYSTEM 6E1-36
EVAPORATIVE EMISSION CONTROL SYSTEM 6E1-37
PCV SYSTEM..... 6E1-39
SPECIAL TOOL 6E1-40
TIGHTENING TORQUE SPECIFICATION . 6E1-41

GENERAL DESCRIPTION

The engine and emission control system is divided into 4 major sub-systems : air intake system, fuel delivery system, electronic control system and emission control system.

Air intake system includes air cleaner, throttle body, IAC valve and intake manifold.

Fuel delivery system includes fuel pump, delivery pipe, fuel pressure regulator, etc. Electronic control system includes ECM, various sensors and controlled devices.

Emission control system includes EGR, EVAP and PCV system.

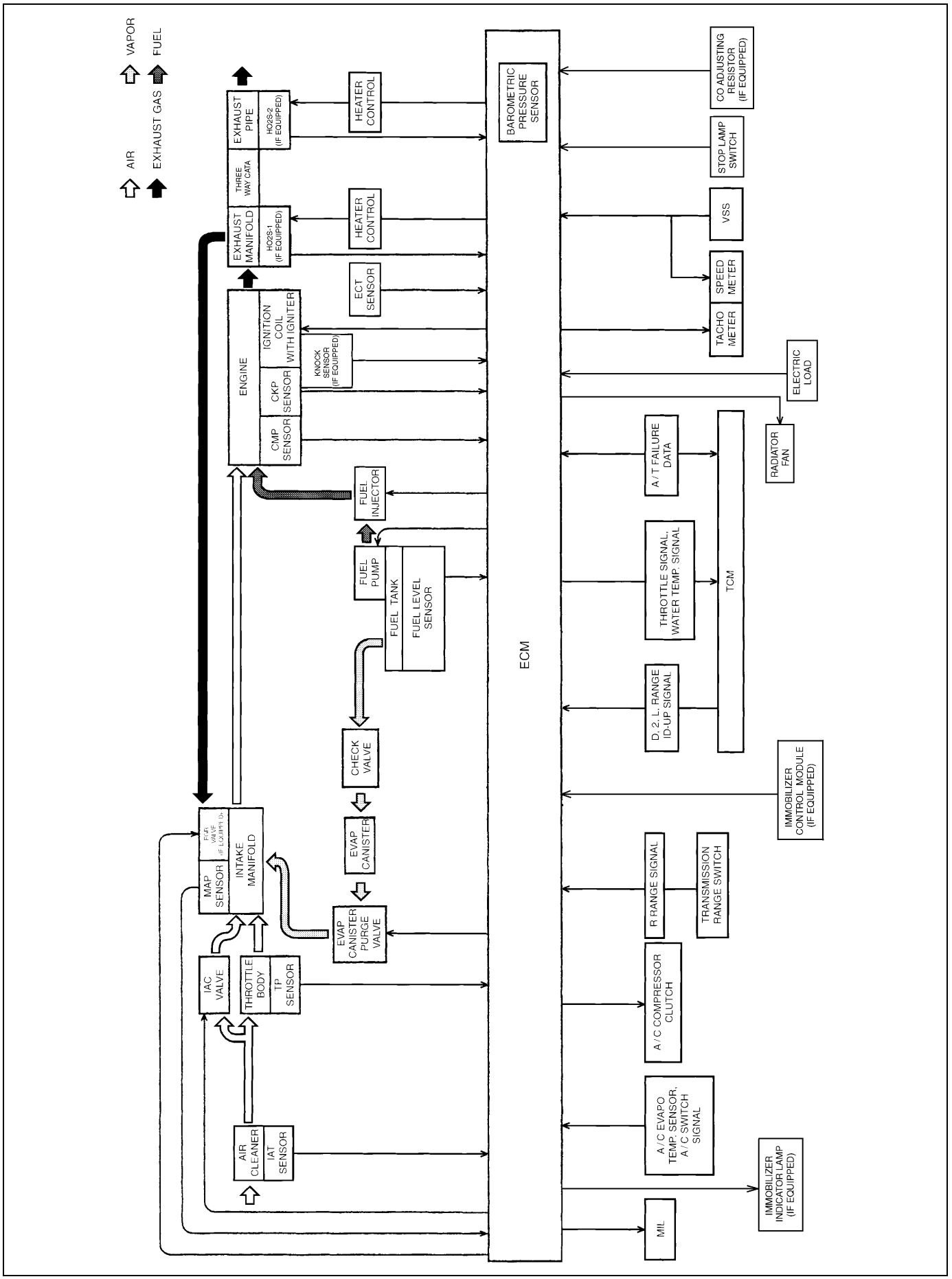
VAPOR
FUEL
AIR
EXHAUST GAS
EXHAUST PIPE
HO2S-2 (IF EQUIPPED)
THREE WAY CATA
EXHAUST MANIFOLD
HO2S-1 (IF EQUIPPED)
ENGINE
IGNITION COIL WITH IGNITER
KNOCK SENSOR (IF EQUIPPED)
CKP SENSOR
CMP SENSOR
HEATER CONTROL
HEATER CONTROL
ECT SENSOR
FUEL INJECTOR
FUEL PUMP
FUEL TANK
FUEL LEVEL SENSOR
CHECK VALVE
EVAP CANISTER
EVAP CANISTER PURGE VALVE
FAPI VALVE (IF EQUIPPED)
MAP SENSOR
INTAKE MANIFOLD
IAC VALVE
THROTTLE BODY
TP SENSOR
AIR CLEANER
IAT SENSOR
BAROMETRIC PRESSURE SENSOR
ECM
CO ADJUSTING RESISTOR (IF EQUIPPED)
STOP LAMP SWITCH
VSS
SPEED METER
TACHO METER
ELECTRIC LOAD
RADIATOR FAN
A/T FAILURE DATA
THROTTLE SIGNAL, WATER TEMP. SIGNAL
TCM
D, 2, L RANGE ID-UP SIGNAL
IMMOBILIZER CONTROL MODULE (IF EQUIPPED)
R RANGE SIGNAL
TRANSMISSION RANGE SWITCH
A/C COMPRESSOR CLUTCH
A/C EVAPO TEMP. SENSOR, A/C SWITCH SIGNAL
IMMOBILIZER INDICATOR LAMP (IF EQUIPPED)
MIL

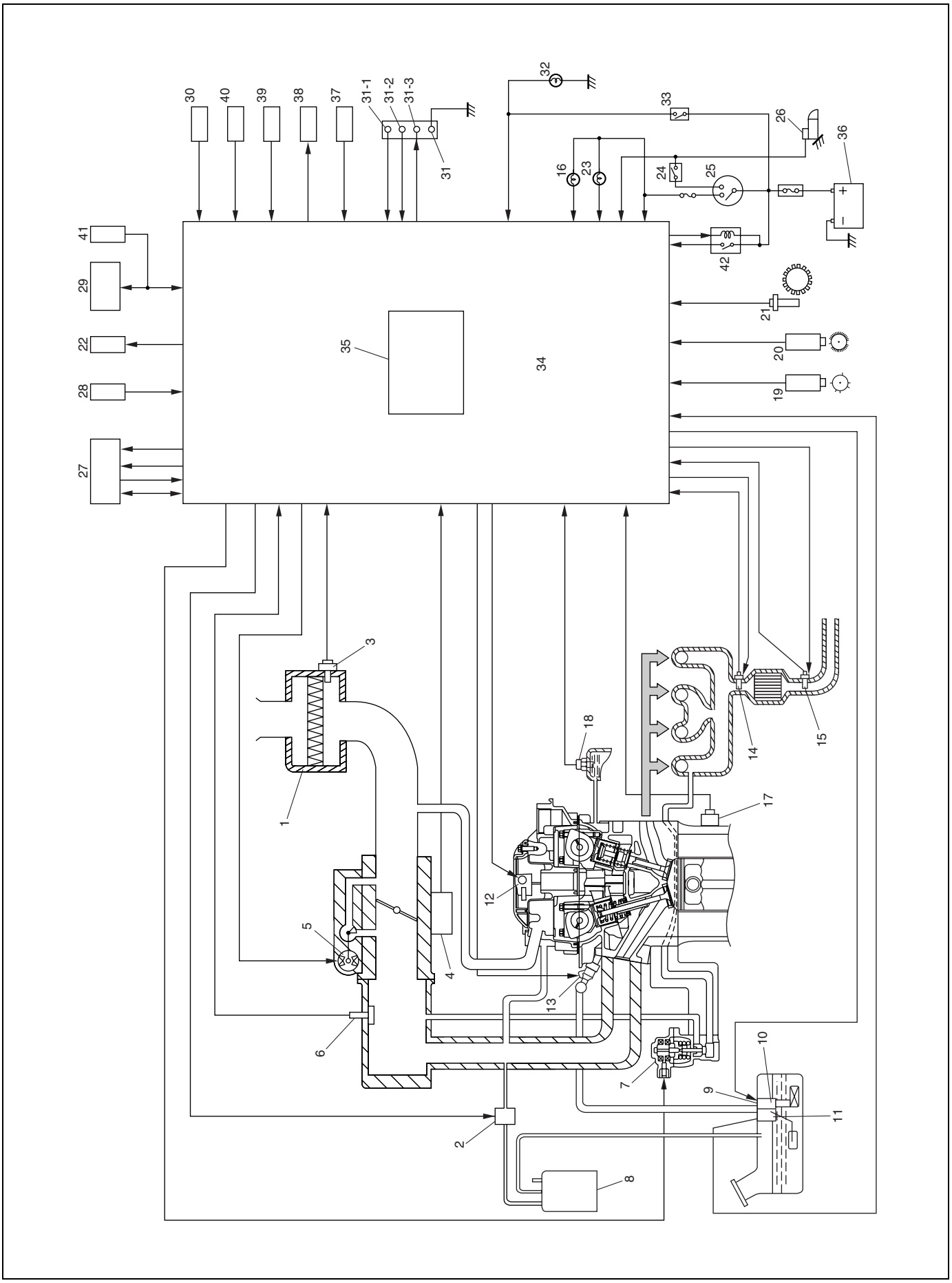
1
2
3
4
5
6
7
8
9
10
11
12
13
14
15
16
17
18
19
20
21
22
23
24
25
26
27
28
29
30
31
31-1
31-2
31-3
32
33
34
35
36
37
38
39
40
41
42
+
-

1. Air Cleaner	16. Immobilizer indicator lamp (if equipped)	31. Monitor connector (vehicle without immobilizer indicator lamp)
2. EVAP canister purge valve	17. Knock sensor (if equipped)	31-1. Diagnosis switch terminal (vehicle without immobilizer indicator lamp)
3. IAT sensor	18. ECT sensor	31-2. Test switch terminal (vehicle without immobilizer indicator lamp)
4. TP sensor	19. CMP sensor	31-3. Duty output terminal (vehicle without immobilizer indicator lamp)
5. IAC valve	20. CKP sensor	32. Stop lamp
6. MAP sensor	21. VSS	33. Stop lamp switch
7. EGR valve (if equipped)	22. Radiation fan	34. ECM
8. EVAP canister	23. Malfunction indicator lamp in combination meter	35. Barometric pressure sensor (if equipped)
9. Tank pressure control valve (built-in fuel pump)	24. Park/Neutral position switch (A/T)	36. Battery
10. Fuel pump (with pressure regulator)	25. Ignition switch	37. CO adjusting resistor (if equipped)
11. Fuel level sensor (vehicle with immobilizer indicator lamp)	26. Starter magnetic switch	38. A/C compressor clutch (if equipped)
12. Ignition coil assembly	27. TCM	39. A/C switch (if equipped)
13. Fuel injector	28. Transmission range switch (A/T)	40. A/C evaporator temp. sensor (if equipped)
14. Heated Oxygen Sensor (HO2S)-1 (if equipped)	29. DLC	41. Immobilizer control module (if equipped)
15. Heated Oxygen Sensor (HO2S)-2 (if equipped)	30. Electric load	42. Main relay

AIR INTAKE SYSTEM

The main components of the air intake system are air cleaner (1), air cleaner outlet hose (2), throttle body (3), idle air control valve (4) and intake manifold (5).

The air (by the amount corresponding to the throttle valve (6) opening and engine speed) is filtered by the air cleaner (1), passes through the throttle body (3), is distributed by the intake manifold (5) and finally drawn into each combustion chamber.

When the idle air control valve (4) is opened according to the signal from ECM, the air (7) bypasses the throttle valve (6) through bypass passage and is finally drawn into the intake manifold (5).

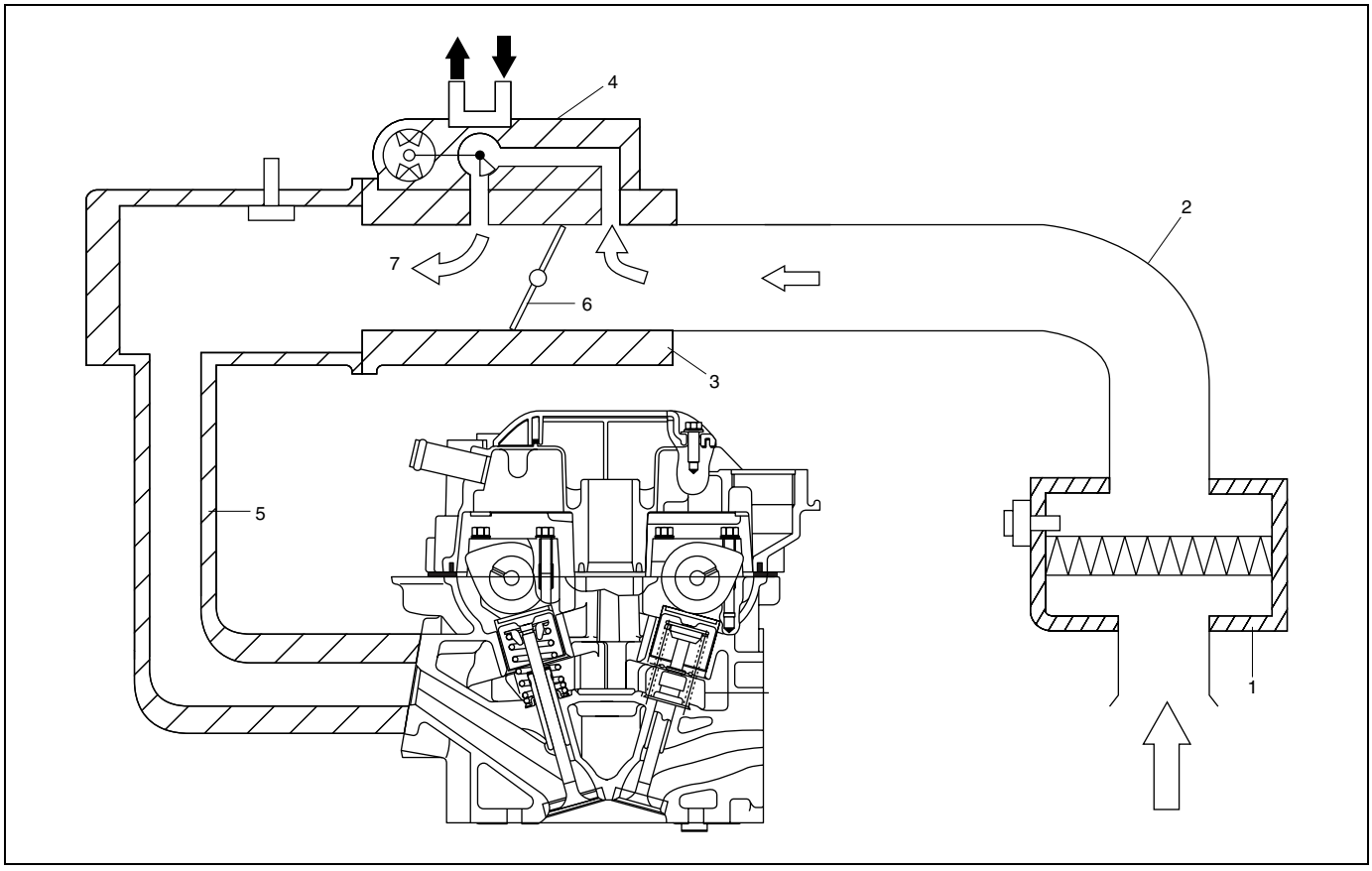

FUEL DELIVERY SYSTEM

The fuel system consists of fuel tank (1), fuel pump (2) (with built-in fuel filter (3) and fuel pressure regulator (4)), delivery pipe (5), injectors (6) and fuel feed line (7).
The fuel (8) in the fuel tank (1) is pumped up by the fuel pump (2), sent into delivery pipe (5) and injected by the injectors (6).
As the fuel pump assembly is equipped with built-in fuel filter (3) and fuel pressure regulator (4), the fuel (8) is filtered and its pressure is regulated before being sent to the delivery pipe (5).
The excess fuel from fuel pressure regulation process is returned back (9) into the fuel tank.
Also, fuel vapor generated in fuel tank is led through the fuel vapor line (10) into the EVAP canister (12).

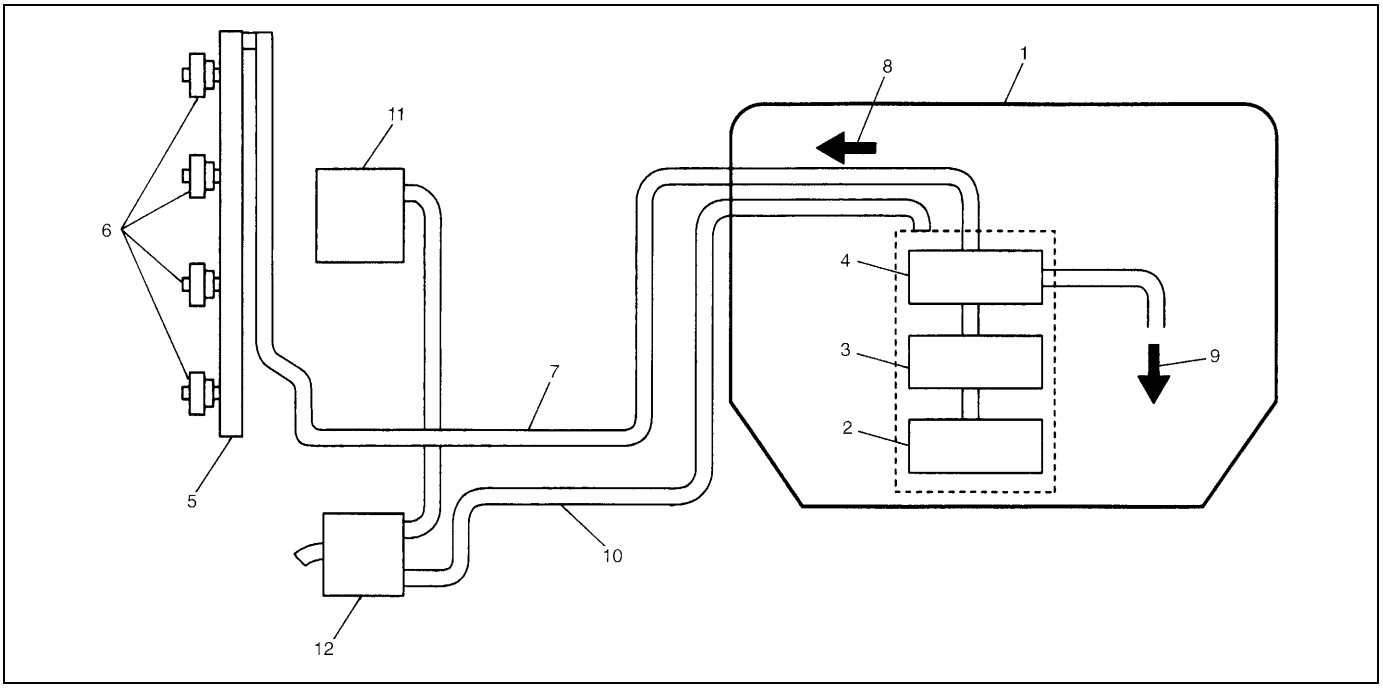

11. Intake manifold

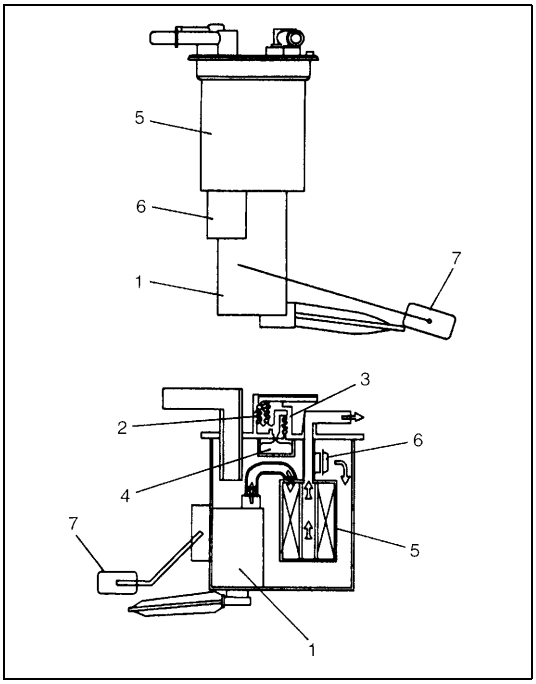

FUEL PUMP

An in-tank type electric pump has been adopted for the fuel pump (1). Incorporated in the pump assembly are;

- Tank pressure control valve (2) which keeps the pressure in the fuel tank constant, and prevents the fuel from spouting and tank itself from being deformed.
- Relief valve (3) which prevents the pressure in tank from rising excessively.
- Fuel cut valve (4) which closes as the float rises so that the fuel will not enter the canister when the fuel level in the tank rises high depending on the fuel level in the tank and the vehicle tilt angle.

Also, a fuel filter (5) and a fuel pressure regulator (6) are included and a fuel level gauge (7) is attached.
Addition of the fuel pressure regulator (6) to the fuel pump makes it possible to maintain the fuel pressure at constant level and ECM controls compensation for variation in the intake manifold pressure.

ELECTRONIC CONTROL SYSTEM

The electronic control system consists of 1) various sensors which detect the state of engine and driving conditions, 2) ECM which controls various devices according to the signals from the sensors and 3) various controlled devices.

Functionally, it is divided into nine sub systems :

- Fuel injection control system
- Idle speed control system
- Fuel pump control system
- A/C control system (if equipped)
- Radiator fan control system
- EGR system (if equipped)
- Evaporative emission control system
- Oxygen sensor heater control system (if equipped)
- Ignition control system

Also, with A/T model, ECM sends throttle valve opening signal and coolant temp. signal to transmission control module to control A/T.

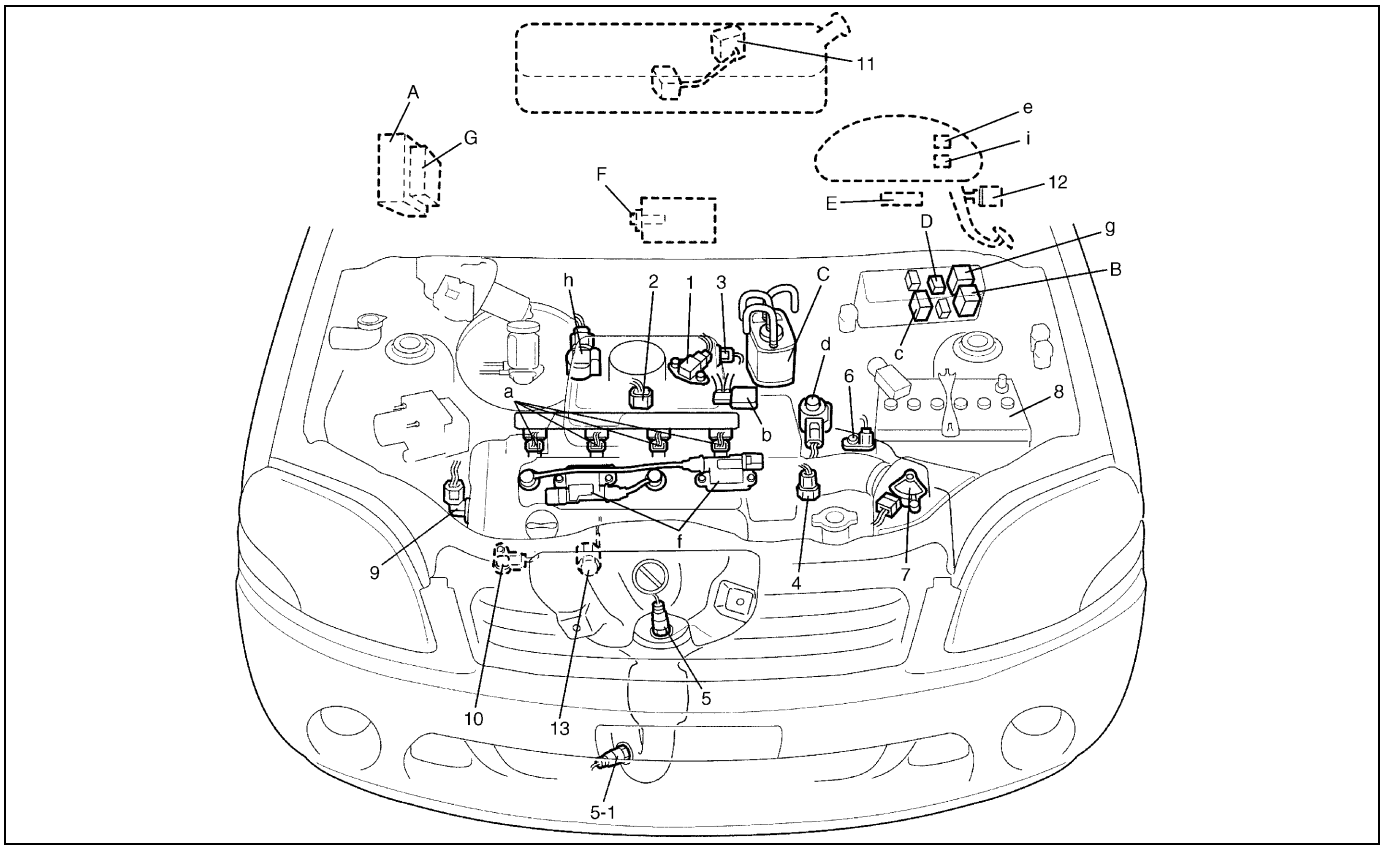

INFORMATION SENSORS	CONTROL DEVICES	OTHERS
1. MAP sensor	a : Fuel injector	A : ECM
2. TP sensor	b : EVAP canister purge valve	B : Main relay
3. IAT sensor	c : Fuel pump relay	C : EVAP canister
4. ECT sensor	d : EGR valve (step motor) (if equipped)	D : Monitor connector
5. Heated oxygen sensor-1 (if equipped)	e : Malfunction indicator lamp	E : Data link connector
5-1. Heated oxygen sensor-2 (if equipped)	f : Ignition coil assembly	F : A/C EVAP thermistor (if equipped)
6. VSS	g : Radiator fan control relay	G : TCM (A/T)
7. Transmission range switch (A/T)	h : IAC valve	
8. Battery	i : Immobilizer indicator lamp	
9. CMP sensor		
10. CKP sensor		
11. Fuel level sensor (gauge) (in fuel tank)		
12. Stop lamp switch		
13. Knock sensor (if equipped)		

ENGINE & EMISSION CONTROL INPUT/OUTPUT TABLE

INPUT \ OUTPUT		ELECTRIC CONTROL DEVICE											
		FUEL PUMP RELAY	FUEL INJECTOR	HO2S HEATER	IAC VALVE	IGNITION COIL WITH IGNITER	EGR VALVE (IF EQUIPPED)	EVAP CANISTER PURGE VALVE	A/C COMPRESSOR CLUTCH	RADIATOR FAN RELAY	MIL	MAIN RELAY	TRANSMISSION CONTROL MODULE
SIGNAL FROM SENSOR, SWITCH AND CONTROL MODULE	DIAGNOSIS SWITCH (VEHICLE WITHOUT IMMOBILIZER INDICATOR LAMP)										○		
	FUEL LEVEL SENSOR (VEHICLE WITH IMMOBILIZER INDICATOR LAMP)	For detecting fuel level											
	BAROMETRIC PRESSURE SENSOR (VEHICLE WITH EGR VALVE)		○		○						○		○
	STOP LAMP SWITCH				○								
	START SWITCH	○	○		○				○		○		
	IGNITION SWITCH	○	○	○	○	○	○	○	○	○		○	○
	LIGHTING SWITCH				○								
	REAR DEFOGGER SWITCH				○								
	BLOWER SWITCH				○				○		○		
	A/C SWITCH				○				○	○			
	A/C EVAP TEMP. SENSOR				○				○				
	VSS				○				○	○	○		○
	HEATED OXYGEN SENSOR-1 (VEHICLE WITH EGR VALVE)		○					○			○		
	HEATED OXYGEN SENSOR-2 (VEHICLE WITH IMMOBILIZER INDICATOR LAMP)	For detecting deterioration of three way catalytic convertor									○		
	IAT SENSOR		○		○	○	○	○	○		○		
	ECT SENSOR		○	○	○	○	○	○	○	○	○		○
	TP SENSOR		○		○	○			○		○		○
	MAP SENSOR		○	○	○	○	○	○	○		○		
	CMP SENSOR	○	○	○	○	○	○	○	○		○		
	CKP SENSOR	○	○	○	○	○	○	○	○		○		
	TEST SWITCH TERMINAL (VEHICLE WITHOUT IMMOBILIZER INDICATOR LAMP)					○							
	KNOCK SENSOR (VEHICLE WITH EGR VALVE)					○					○		

ECM INPUT/OUTPUT CIRCUIT DIAGRAM

For TYPE A (See NOTE)

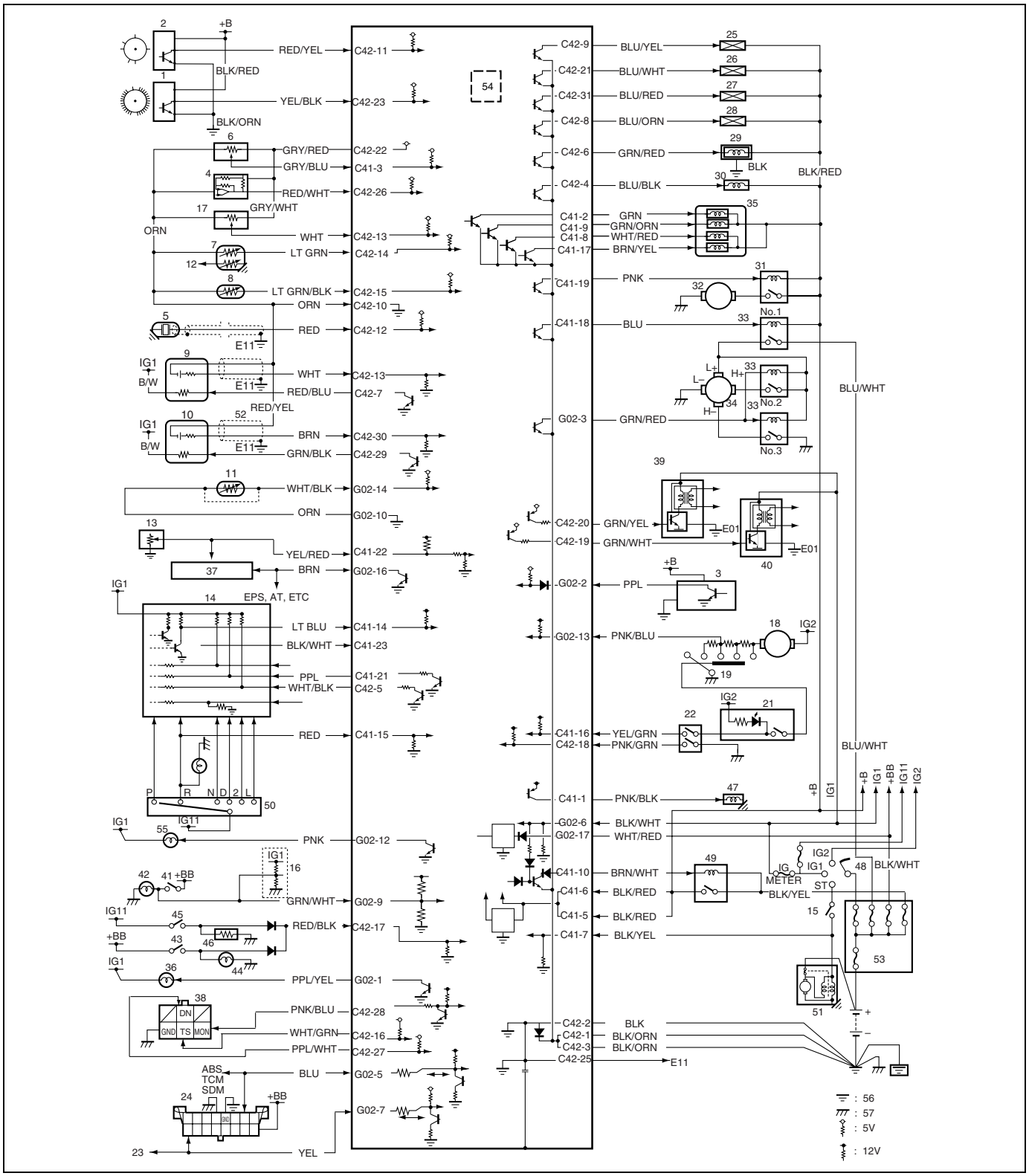

NOTE:

Type A is other than follows.

Type B is right hand steering vehicle equipped with fasten seat belt light and immobilizer control system.

1. CKP sensor	20. Blank	39. Ignition coil assembly (for No.1 and No.4 spark plugs)
2. CMP sensor	21. A/C switch	40. Ignition coil assembly (for No.2 and No.3 spark plugs)
3. VSS	22. A/C pressure switch	41. Stop lamp switch
4. MAP sensor	23. Immobilizer control module	42. Stop lamp
5. Knock sensor (if equipped)	24. Data link connector	43. Lighting switch
6. TP sensor	25. Injector No.1	44. Position lamp
7. ECT sensor	26. Injector No.2	45. Rear defogger switch
8. IAT sensor	27. Injector No.3	46. Rear defogger
9. Heated oxygen sensor-1 (if equipped)	28. Injector No.4	47. A/C compressor clutch (if equipped)
10. Heated oxygen sensor-2 (if equipped)	29. IAC valve	48. Ignition switch
11. A/C evaporator temp. sensor	30. EVAP canister purge valve	49. Main relay
12. Combination meter	31. Fuel pump relay	50. Transmission range switch (A/T)
13. Fuel level sensor (vehicle with immobilizer indicator lamp)	32. Fuel pump	51. Starting motor
14. TCM	33. Radiator fan relay	52. Shield wire
15. Transmission range switch	34. Radiator fan motor	53. Main fuse
16. ABS control module	35. EGR valve (if equipped)	54. Barometric pressure sensor
17. CO adjusting resistor (if equipped)	36. Malfunction indicator lamp	55. Immobilizer indicator lamp (if equipped)
18. Heater fan motor	37. Tachometer	56. Engine ground
19. Heater fan switch	38. Monitor connector (vehicle without immobilizer indicator lamp)	57. Body ground

For TYPE B (Refer to NOTE in "ECM INPUT/OUTPUT CIRCUIT DIAGRAM" for applicable model.)

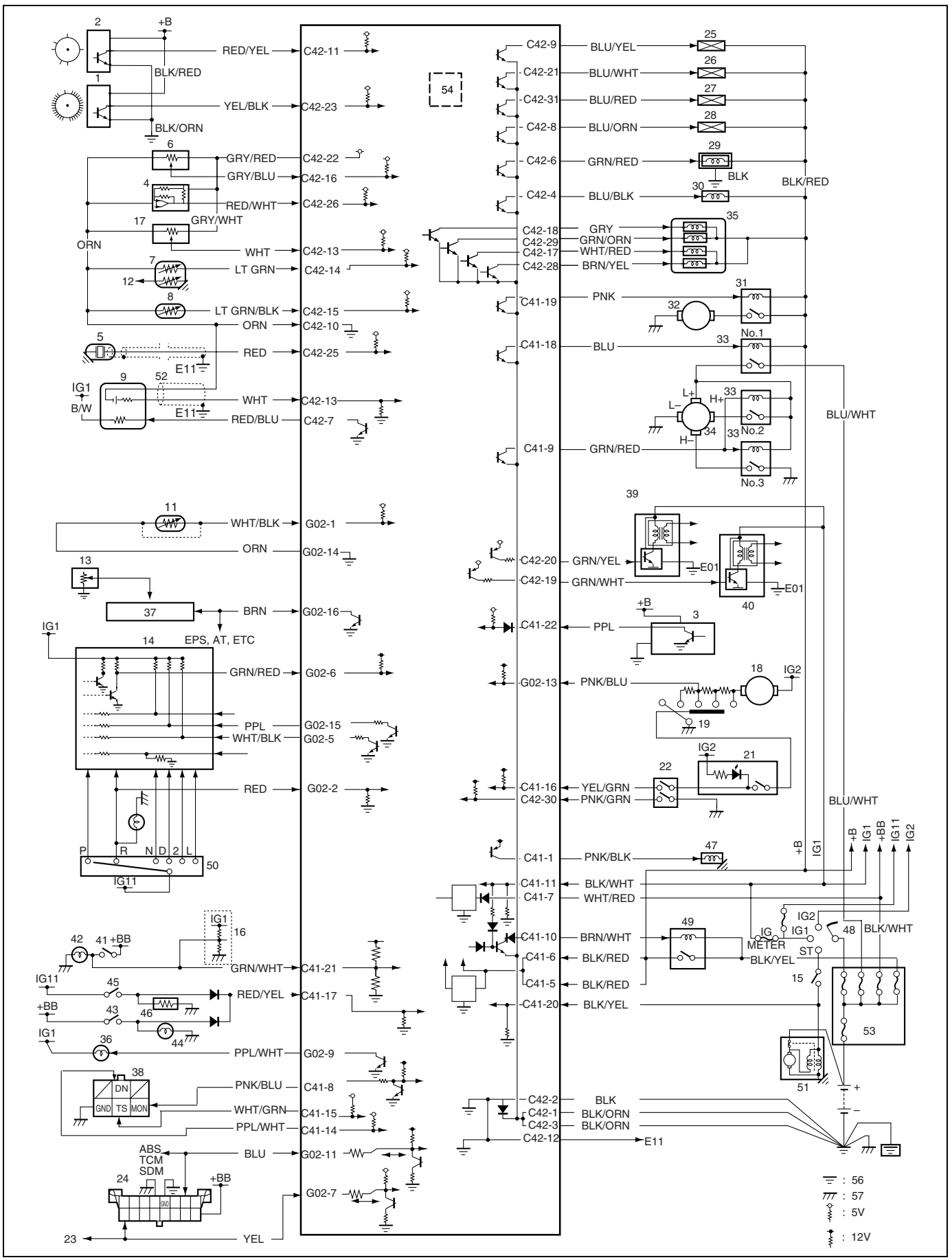

1. CKP sensor	20. Blank	39. Ignition coil assembly (for No.1 and No.4 spark plugs)
2. CMP sensor	21. A/C switch	40. Ignition coil assembly (for No.2 and No.3 spark plugs)
3. VSS	22. A/C pressure switch	41. Stop lamp switch
4. MAP sensor	23. Immobilizer control module	42. Stop lamp
5. Knock sensor (if equipped)	24. Data link connector	43. Lighting switch
6. TP sensor	25. Injector No.1	44. Position lamp
7. ECT sensor	26. Injector No.2	45. Rear defogger switch
8. IAT sensor	27. Injector No.3	46. Rear defogger
9. Heated oxygen sensor-1 (if equipped)	28. Injector No.4	47. A/C compressor clutch (if equipped)
10. Blank	29. IAC valve	48. Ignition switch
11. A/C evaporator temp. sensor	30. EVAP canister purge valve	49. Main relay
12. Combination meter	31. Fuel pump relay	50. Transmission range switch (A/T)
13. Fuel level sensor (vehicle with immobilizer indicator lamp)	32. Fuel pump	51. Starting motor
14. TCM	33. Radiator fan relay	52. Shield wire
15. Transmission range switch	34. Radiator fan motor	53. Main fuse
16. ABS control module	35. EGR valve (if equipped)	54. Barometric pressure sensor
17. CO adjusting resistor (if equipped)	36. Malfunction indicator lamp	55. Immobilizer indicator lamp (if equipped)
18. Heater fan motor	37. Tachometer	56. Engine ground
19. Heater fan switch	38. Monitor connector (vehicle without immobilizer indicator lamp)	57. Body ground

ECM TERMINAL ARRANGEMENT TABLE

For TYPE A (Refer to NOTE in page "ECM INPUT/OUTPUT CIRCUIT DIAGRAM" for applicable model.)

CONNECTOR	TERMINAL	WIRE COLOR	CIRCUIT
C42	1	BLK/ORN	Ground for ECM
	2	BLK	Ground for drive circuit
	3	BLK/ORN	Ground for drive circuit
	4	BLU/BLK	Canister purge valve
	5	WHT/BLK	Coolant temp. signal output
	6	GRN/RED	IAC valve
	7	RED/BLU	Heater of HO2S-1
	8	BLU/ORN	No.4 fuel injector
	9	BLU/YEL	No.1 fuel injector
	10	ORN	Ground for sensor circuit
	11	RED/YEL	CMP sensor
	12	RED	Knock sensor (if equipped)
	13	WHT	Heated oxygen sensor-1 (if equipped)
			CO adjusting resistor (if equipped)
	14	LT GRN	Coolant temp. sensor
	15	LT GRN/BLK	Intake air temp. sensor
	16	WHT/GRN	Test switch terminal (if equipped)
	17	RED/BLK	Electric load (+)
	18	PNK/GRN	A/C switch
	19	GRN/WHT	IG coil assembly for No.2 and 3 spark plugs
	20	GRN/YEL	IG coil assembly for No.1 and 4 spark plugs
	21	BLU/WHT	No.2 fuel injector
	22	GRY/RED	Power supply for sensor
	23	YEL/BLK	CKP sensor (+)
	24	–	–
	25	–	Ground for sensor shield wire
	26	RED/WHT	MAP sensor
	27	PPL/WHT	Diagnosis switch terminal (if equipped)
	28	PNK/BLU	Duty output terminal (if equipped)
	29	BRN	Heater of HO2S-2
	30	GRN/BLK	Heated oxygen sensor-2
	31	BLU/RED	No.3 fuel injector

CONNECTOR	TERMINAL	WIRE COLOR	CIRCUIT
C41	1	PNK/BLK	A/C compressor clutch
	2	GRN	EGR valve (stepper motor coil 1)
	3	GRY/BLU	Throttle position (TP) sensor
	4	–	Heater of HO2S-2
	5	BLK/RED	Power source
	6	BLK/RED	Power source
	7	BLK/YEL	Engine start signal
	8	WHT/RED	EGR valve (stepper motor coil 3)
	9	GRN/ORN	EGR valve (stepper motor coil 2)
	10	BRN/WHT	Ground for main relay
	11	–	–
	12	–	–
	13	–	Heated oxygen sensor-2
	14	LT BLU	"D", "2", "L"-range ID-UP signal
	15	RED	"R"-range signal
	16	YEL/GRN	A/C SW signal
	17	BRN/YEL	EGR valve (stepper motor coil 4)
	18	BLU	Radiator fan relay 1
	19	PNK	Fuel pump relay
	20	–	–
	21	PPL	Throttle opening signal output for A/T
	22	YEL/RED	Fuel level gauge
	23	BLK/WHT	TCM serial data line
	24	–	–

CONNECTOR	TERMINAL	WIRE COLOR	CIRCUIT
G02	1	PPL/WHT	Malfunction indicator lamp
	2	PPL	Vehicle speed sensor
	3	PPL/YEL	Radiator fan relay 2
	4	–	–
	5	BLU	Data link connector
	6	BLK/WHT	Ignition switch signal
	7	YEL	Data link connector
	8	–	–
	9	GRN/WHT	Stop lamp switch (Brake pedal switch)
	10	ORN	GND for sensor
	11	–	–
	12	PNK	Immobilizer indicator lamp (if equipped)
	13	PNK/BLU	Electrical load (-)
	14	WHT/BLK	A/C evaporator temp. sensor
	15	–	–
	16	BRN	Tachometer signal
	17	WHT/RED	Backup power source

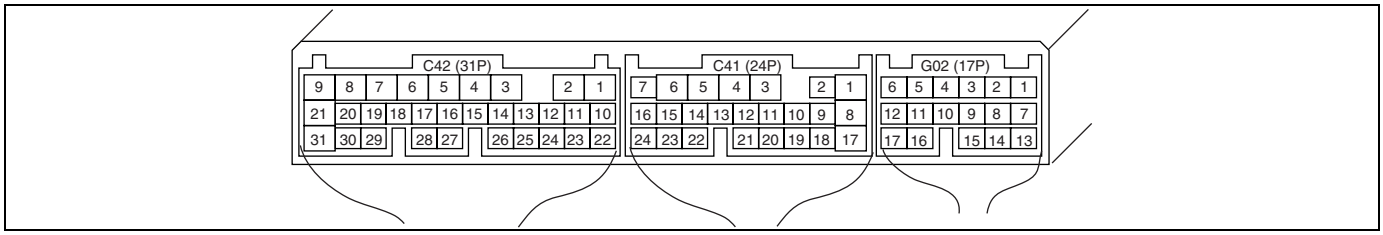

NOTE:

For abbreviation of wire color, refer to Section 0A.

For TYPE B (Refer to NOTE in page "ECM INPUT/OUTPUT CIRCUIT DIAGRAM" for applicable model.)

CONNEC-TOR	TERMINAL	WIRE COLOR	CIRCUIT
C42	1	BLK/ORN	Ground for ECM
	2	BLK	Ground for drive circuit
	3	BLK/ORN	Ground for drive circuit
	4	BLU/BLK	Canister purge valve
	5	–	–
	6	GRN/RED	IAC valve
	7	RED/BLU	Heater of HO2S-1
	8	BLU/ORN	No.4 fuel injector
	9	BLU/YEL	No.1 fuel injector
	10	ORN	Ground for sensor circuit
	11	RED/YEL	CMP sensor
	12	Or	Grand for shield wire
	13	WHT	Heated oxygen sensor-1 (if equipped)
			CO adjusting resistor (if equipped)
	14	LT GRN	Coolant temp. sensor
	15	LT GRN/BLK	Intake air temp. sensor
	16	GRY/BLU	Throttle position (TP) sensor
	17	WHT/RED	EGR valve (stepper motor coil 3)
	18	GRY	EGR valve (stepper motor coil 1)
	19	GRN/WHT	IG coil assembly for No.2 and 3 spark plugs
	20	GRN/YEL	IG coil assembly for No.1 and 4 spark plugs
	21	BLU/WHT	No.2 fuel injector
	22	GRY/RED	Power supply for sensor
	23	YEL/BLK	CKP sensor (+)
	24	–	–
	25	RED	Knock sensor (if equipped)
	26	RED/WHT	MAP sensor
	27	–	–
	28	BRN/YEL	EGR valve (stepper motor coil 4)
	29	GRN/ORN	EGR valve (stepper motor coil 2)
	30	PNK/GRN	A/C switch
	31	BLU/RED	No.3 fuel injector

CONNEC-TOR	TERMINAL	WIRE COLOR	CIRCUIT
C41	12	–	–
	13	–	–
	14	PPL/WHT	Diagnosis switch terminal
	15	WHT/GRN	Test switch terminal
	16	YEL/GRN	A/C SW signal
	17	RED/YEL	Electric load (+)
	18	BLU	Radiator fan relay 1
	19	PNK	Fuel pump relay
	20	BLK/YEL	Cranking signal
	21	GRN/WHT	Stop lamp switch (Brake pedal switch)
	22	PPL	Vehicle speed sensor
	23	–	–
	24	–	–

CONNEC-TOR	TERMINAL	WIRE COLOR	CIRCUIT
G02	1	WHT/BLK	A/C evaporator temp. sensor
	2	RED	"R" range signal
	3	–	–
	4	–	–
	5	WHT/BLK	Engine coolant temp. signals output
	6	GRN/RED	"D", "2", "L" range ID-UP signal
	7	YEL	Data link connector
	8	–	–
	9	PPL/WHT	Malfunction indicator lamp
	10	–	–
	11	BLU	Data link connector
	12	–	–
	13	PNK/BLU	Electrical load (-)
	14	ORN	Ground for sensor
	15	PPL	Throttle opening signal output for A/T
	16	BRN	Tachometer signal
	17	–	–

CONNEC-TOR	TERMINAL	WIRE COLOR	CIRCUIT
C41	1	PNK/BLK	A/C compressor clutch
	2	–	–
	3	–	–
	4	–	–
	5	BLK/RED	Power source for drive circuit
	6	BLK/RED	Power source for main circuit
	7	WHT/RED	Power source for memory circuit
	8	PNK/BLU	Duty signal output terminal
	9	GRN/RED	Radiator fan drive relay No.2
	10	BRN/WHT	Ground for main relay
	11	BLK/WHT	Ignition switch signal

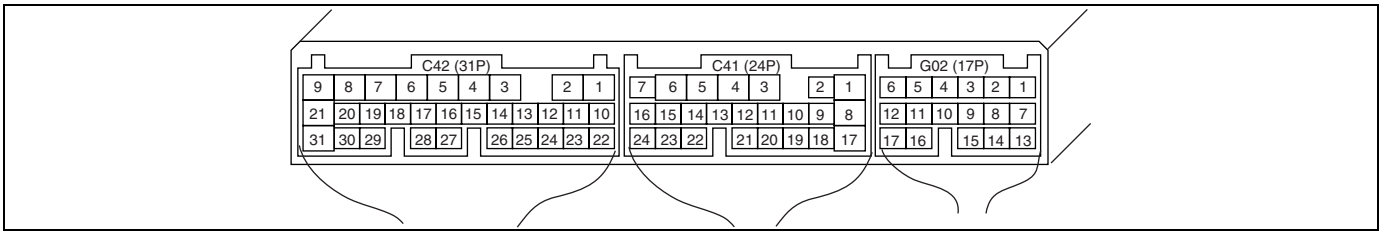

NOTE:

For abbreviation of wire color, refer to Section 0A.

ON-VEHICLE SERVICE

ACCELERATOR CABLE ADJUSTMENT

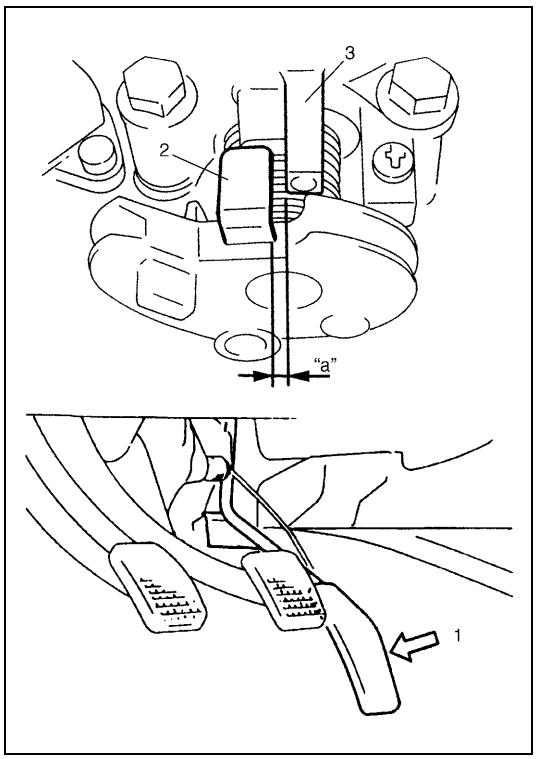

With accelerator pedal depressed fully (1), check clearance between throttle lever (2) and lever stopper (3) (throttle body) which should be within following specification.
If measured value is out of specification, adjust it to specification with cable adjusting nut (4).

Accelerator cable adjustment clearance (with pedal depressed fully)
"a" : 0.5 – 2.0 mm (0.02 – 0.07 in.)

IDLE SPEED/IDLE AIR CONTROL (IAC) DUTY INSPECTION

Before idle speed/IAC duty check, make sure of the following.

- Lead wires and hoses of Electronic Fuel Injection and engine emission control systems are connected securely.
- Accelerator cable has some play, that is, it is not tight.
- Valve lash is checked and adjusted according to maintenance schedule.
- Ignition timing is within specification.
- All accessories (wipers, heater, lights, A/C, etc.) are out of service.
- Air cleaner has been properly installed and is in good condition.
- No abnormal air inhaling from air intake system.

After above items are all confirmed, check idle speed and IAC duty as follows.

NOTE:

Before starting engine, place transmission gear shift lever in "Neutral" (shift selector lever to "P" range for A/T vehicle), and set parking brake and block drive wheels.

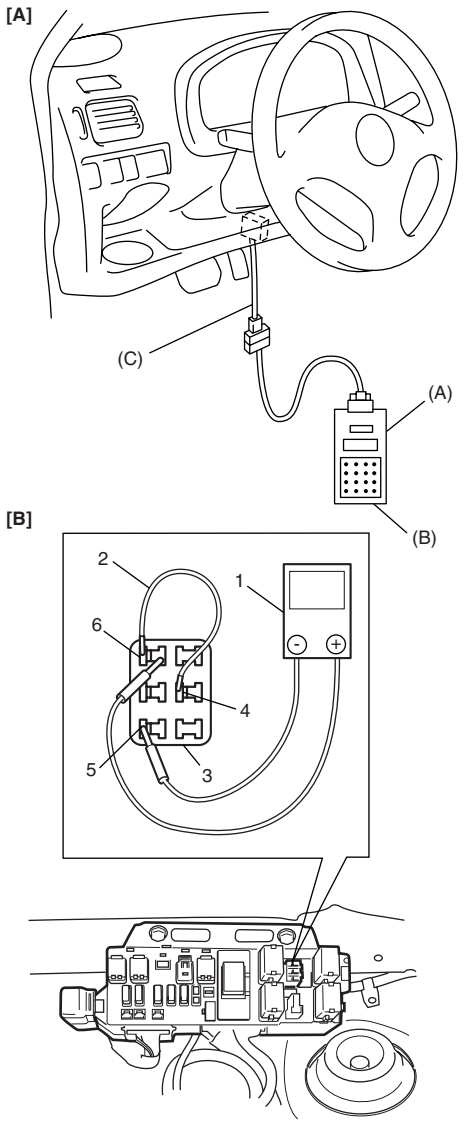

1) Connect SUZUKI scan tool (1) to DLC with ignition switch OFF, if it is available.
2) Warm up engine to normal operating temperature.
3) Check engine idle speed and "IAC duty" as follows :
4) When using SUZUKI scan tool :
   a) Select "Data List" mode on scan tool to check "IAC duty".

(A) : 09931-76011 (SUZUKI scan tool)
(B) : Mass storage cartridge
(C) : 09931-76030 (16/14 pin DLC cable)

[A] : When using SUZUKI scan tool
[B] : When using duty meter (Vehicle without immobilizer indicator lamp)

5) When using duty meter (vehicle without immobilizer indicator lamp) :

NOTE:

IAC duty can be checked using monitor connector only for vehicle not equipped with immobilizer indicator lamp.

   a) Set tachometer.
   b) Using service wire (2), ground "Diag. switch terminal" (4) in monitor connector (3) and connect duty meter between "Duty output terminal" (5) and "Ground terminal" (6) of monitor connector (3).
6) If duty and/or idle speed is out of specifications, inspect idle air control system referring to Diagnostic Flow Table B-4 Idle Air Control System Check in Section 6.

Engine idle speed and IAC duty

	A/C OFF	A/C ON
M/T vehicle	**700 ± 50 r/min (rpm) 5 – 25 %**	**850 ± 50 r/min (rpm)**
A/T vehicle at P/N range	**750 ± 50 r/min (rpm) 5 – 25 %**	**850 ± 50 r/min (rpm)**

NOTE:

Above duty values are ON duty (low voltage rate) meter indications.

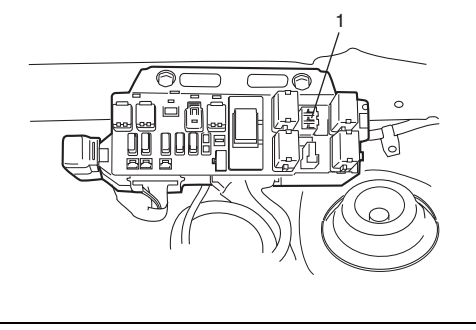

7) Remove service wire from monitor connector (1).
8) Check that specified engine idle speed is obtained with A/C ON if vehicle is equipped with A/C.
   If not, check A/C ON signal circuit and idle air control system.

IDLE MIXTURE INSPECTION / ADJUSTMENT (VEHICLE WITHOUT HEATED OXYGEN SENSOR)

All vehicles not equipped with heated oxygen sensor are shipped with their CO % factory adjusted as follows.

Engine idle mixture (CO %)
0.5 – 1.5 % at specified idle speed

Idle mixture adjustment should never be changed from the original factory setting. However, if during diagnosis, the check indicates idle mixture to be the cause of a driver performance complaint or emission failure, the idle mixture can be adjusted using the following procedures.

NOTE:

For this inspection and adjustment, exhaust gas tester (CO meter) and engine tachometer are necessary.

1) Check idle speed according to “Idle Speed Inspection” section.
2) Using exhaust gas tester, check that idle mixture CO % is within above specification. If it is out of specification, adjust it to specification by turning resistor knob.

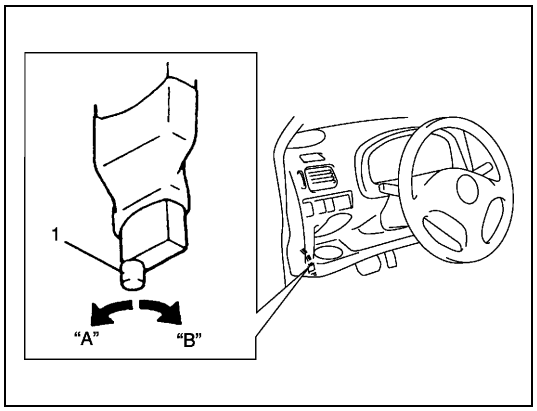

NOTE:

Turning CO adjusting resistor knob to “A” increases CO % (A/F mixture becomes rich) and turning it to “B” decreases CO % (A/F mixture becomes lean).

1. CO adjusting resistor

3) If idle mixture has been adjusted, confirm that idle speed is within specification.

AIR INTAKE SYSTEM

THROTTLE BODY

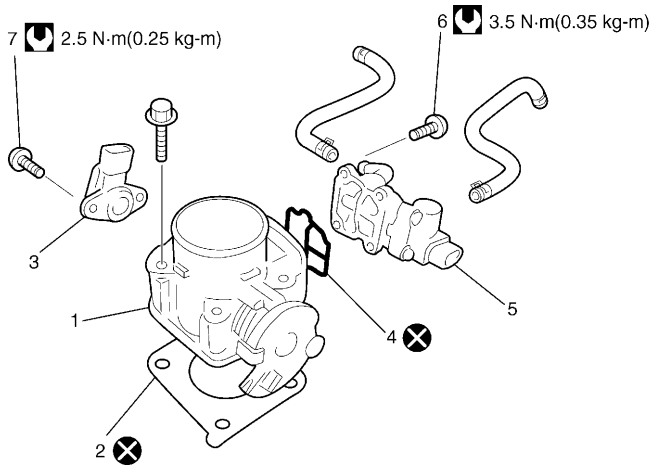

1. Throttle body	4. Gasket	7. TP sensor screws
2. Throttle stop screw	5. Idle air control valve	Tightening torque
3. TP sensor	6. IAC valve screws	Do not reuse.

ON-VEHICLE INSPECTION

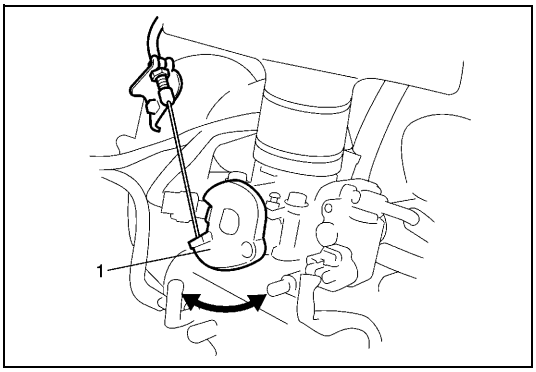

- Check that throttle valve lever (1) moves smoothly.

REMOVAL

1) Disconnect negative cable at battery.
2) Drain cooling system.

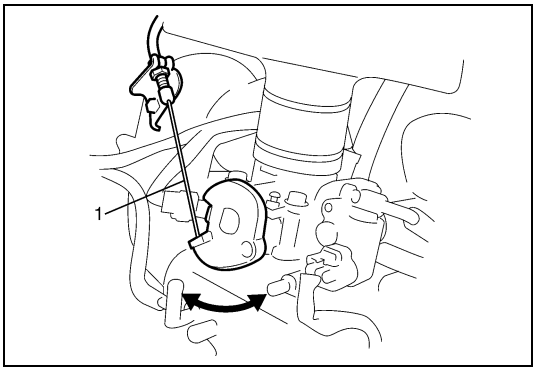

3) Disconnect accelerator cable (1) from throttle valve lever.
4) Disconnect IAT sensor connector and remove air cleaner assembly with air cleaner outlet hose.

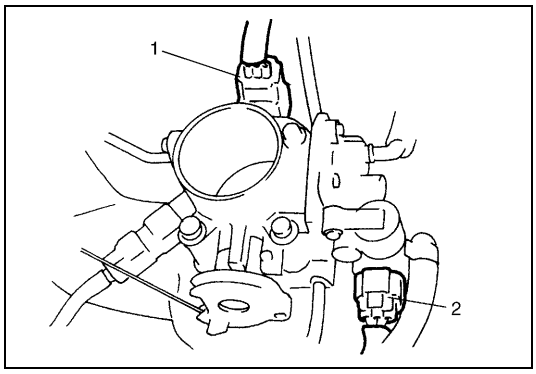

5) Disconnect electric connector from TP sensor (1) and IAC valve (2).
6) Remove throttle body from intake manifold.
7) Disconnect engine coolant hoses from throttle body.

DISASSEMBLY

Remove TP sensor and IAC valve from throttle body.

NOTE:

While disassembling and assembling throttle body, use special care not to deform levers on throttle valve shaft or cause damage to any other parts.

CLEANING

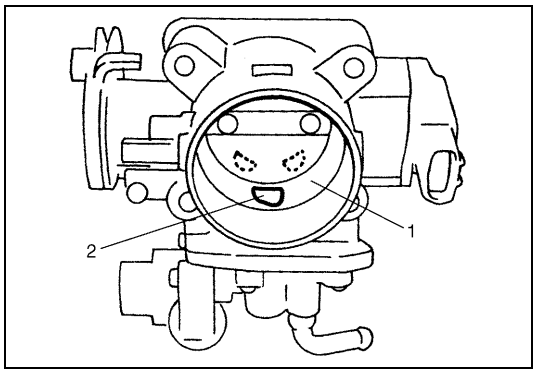

Clean throttle body bore (1) and idle air passage (2) by blowing compressed air.

NOTE:

TP sensor, idle air control valve or other components containing rubber must not be placed in a solvent or cleaner bath. A chemical reaction will cause these parts to swell, harden or get distorted.

REASSEMBLY

1) Install IAC valve to throttle body referring to “IAC valve Installation” section.
2) Install TP sensor to throttle body referring to “TP sensor Installation” section.

INSTALLATION

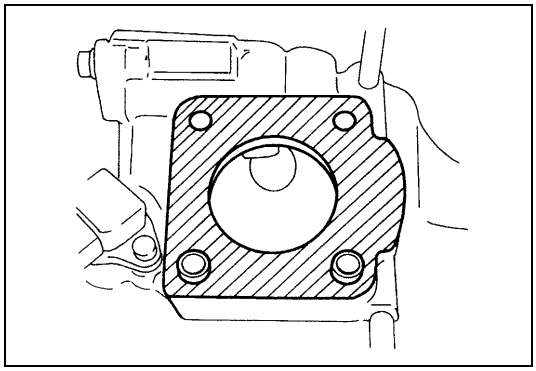

1) Clean mating surfaces and install throttle body gasket to intake manifold.
   Use new gasket.
2) Connect engine coolant hoses.

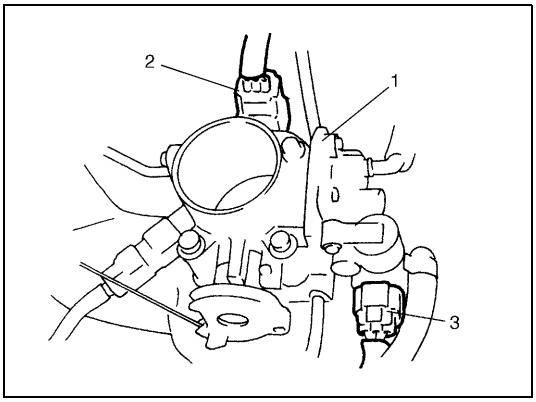

3) Install throttle body (1) to intake manifold.
4) Connect connector to TP sensor (2) and IAC valve (3) securely.
5) Connect accelerator cable and adjust cable play to specification.
6) Install air cleaner assembly with air cleaner outlet hose and connect IAT sensor connector.
7) Refill cooling system.
8) Connect negative cable at battery.

IDLE AIR CONTROL VALVE (IAC VALVE)

REMOVAL

1) Remove throttle body from intake manifold referring to "Throttle Body Removal" section.
2) Remove IAC valve from throttle body.

INSPECTION

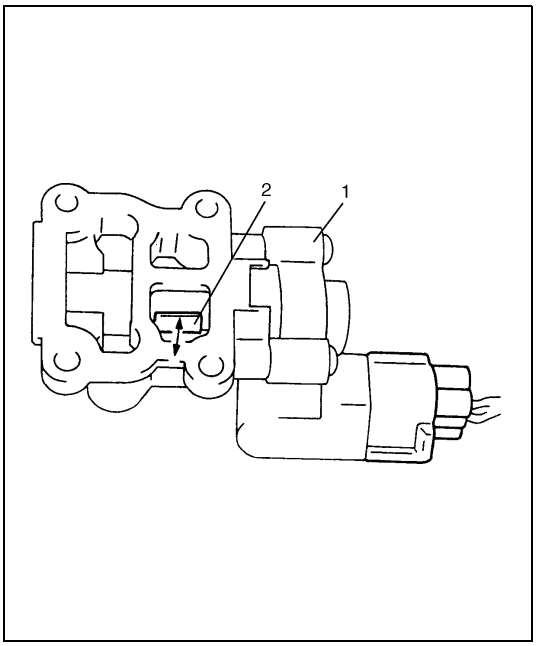

1) Connect each connector to IAC valve (1), TP sensor and IAT sensor.
2) Check that rotary valve (2) of IAC valve opens and closes once and then stops in about 60 ms as soon as ignition switch is turned ON.

NOTE:

- **This check should be performed by two people, one person turns on ignition switch while the other checks valve operation.**
- **As valve operation is momentary, it may be overlooked. To prevent this, perform this operation check 3 times or more continuously.**
  If rotary valve of IAC valve does not operate at all, check wire harness for open and short. If wire harness is in good condition, replace IAC valve and recheck.

INSTALLATION

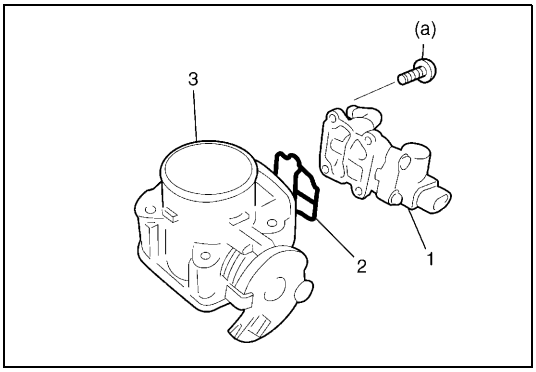

1) Install new gasket (2) to IAC valve (1).
2) Install IAC valve (1) to throttle body (3).
   Tighten IAC valve screws to specified torque.

Tightening torque
IAC valve screw (a) : 3.5 N·m (0.35 kg-m, 2.5 lb-ft)

3) Install throttle body to intake manifold referring to "Throttle Body Installation" section.

FUEL DELIVERY SYSTEM

FUEL PRESSURE INSPECTION

WARNING:

Be sure to perform work in a well-ventilated area and away from any open flames, or there is a risk of a fire breaking out.

1) Relieve fuel pressure in fuel feed line referring to “Fuel Pressure Relief Procedure” in Section 6.
2) Disconnect fuel feed hose from fuel delivery pipe.

CAUTION:

A small amount of fuel may be released when fuel hose is disconnected. Place container under the joint with a shop cloth so that released fuel is caught in container or absorbed in cloth. Place that cloth in an approved container.

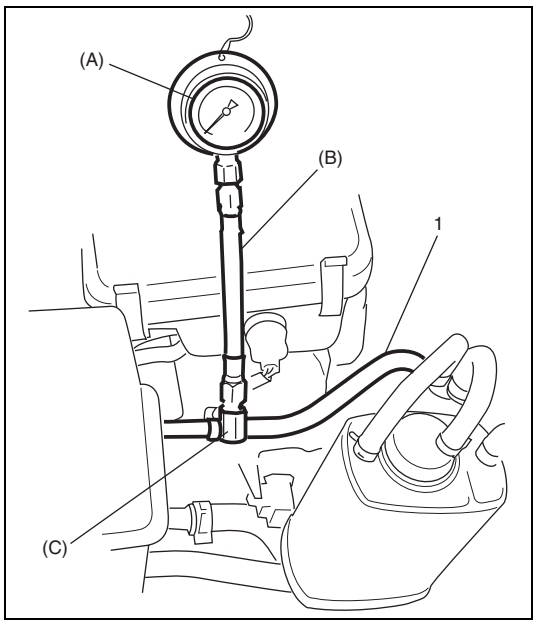

3) Connect special tools and hose between fuel delivery pipe and fuel feed hose (1) as shown in figure, and clamp hoses securely to ensure no leaks occur during checking.

Special tool
(A) : 09912-58441
(B) : 09912-58431
(C) : 09912-58490

4) Check that battery voltage is above 11 V.

5) Turn ignition switch ON to operate fuel pump and after 2 seconds turn it OFF. Repeat this 3 or 4 times and then check fuel pressure.

Fuel pressure specification

CONDITION	FUEL PRESSURE
With fuel pump operating and engine stopped	270 – 310 kPa (2.7 – 3.1 kg/cm^2, 38.4 – 44.0 psi)
At specified idle speed	
With 1 min. after engine (fuel pump) stop (Pressure reduces as time passes)	over 250 kPa (2.5 kg/cm^2, 35.6 psi)

6) Start engine and warm it up to normal operating temperature.
7) Measure fuel pressure at idling.
   If measured pressure does not satisfy specification, refer to "Diagnostic Flow Table B-3" in "Engine Diagnosis" section and check each possibly defective part. Replace if found defective.

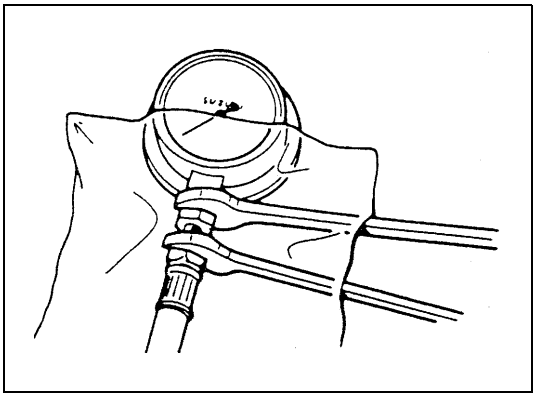

8) After checking fuel pressure, remove fuel pressure gauge.

CAUTION:

As fuel feed line is still under high fuel pressure, make sure to release fuel pressure according to following procedures.

- **Place fuel container under joint.**
- **Cover joint with rag and loosen joint nut slowly to release fuel pressure gradually.**

9) Remove special tools from fuel delivery pipe.
10) Connect fuel feed hose to fuel delivery pipe and clamp it securely.
11) With engine "OFF" and ignition switch "ON", check for fuel leaks.

FUEL PUMP WITH PRESSURE REGULATOR

ON-VEHICLE INSPECTION

CAUTION:

When fuel filler cap is removed in any procedure, work must be done in a well-ventilated area, keep away from any open flames and without smoking.

NOTE:

The fuel pressure regulator is the one body with the fuel pump assembly so individual inspection of it is impossible.

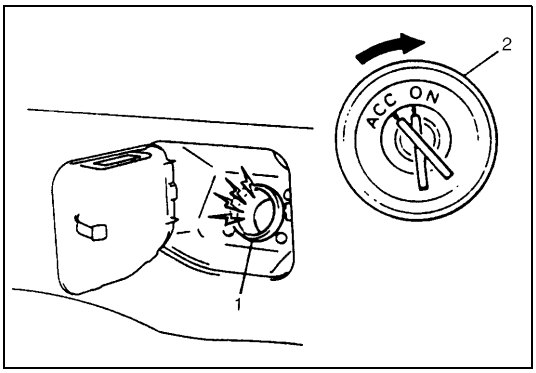

1) Remove filler cap and turn ON ignition switch. Then fuel pump operating sound should be heard from fuel filler for about 2 seconds and stop. Be sure to reinstall fuel filler cap after checking.
   If above check result is not satisfactory, advance to "Diagnostic Flow Table B-2".

1.	Fuel filler
2.	Ignition switch

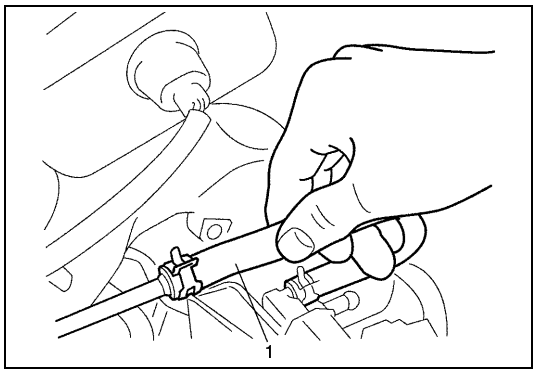

2) Turn OFF ignition switch and leave over 10 minutes as it is.
3) Fuel pressure should be felt at fuel feed hose (1) for about 2 seconds after ignition switch ON.
   If fuel pressure is not felt, advance to “Diagnostic Flow Table B-3”.

REMOVAL

Remove fuel tank from body according to procedure described in Section 6C and remove fuel pump from fuel tank.

INSPECTION

Check fuel pump filter for evidence of dirt and contamination. If present, clean and check for presence of dirt in fuel tank.

INSTALLATION

1) Install fuel pump to its bracket.
2) Install fuel pump to fuel tank and then install fuel tank to body according to procedure described in Section 6C.

FUEL INJECTOR

ON-VEHICLE INSPECTION

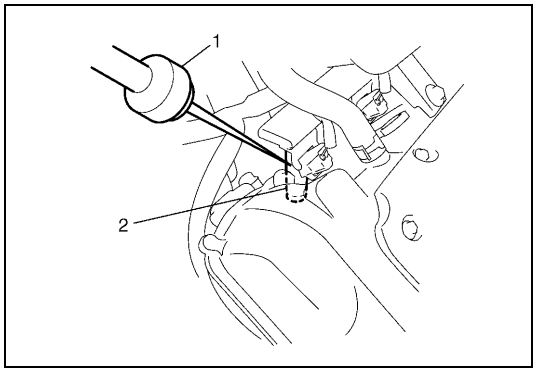

1) Using sound scope (1) or such, check operating sound of injector (2) when engine is running or cranking.
   Cycle of operating sound should vary according to engine speed.
   If no sound or an unusual sound is heard, check injector circuit (wire or connector) or injector (2).

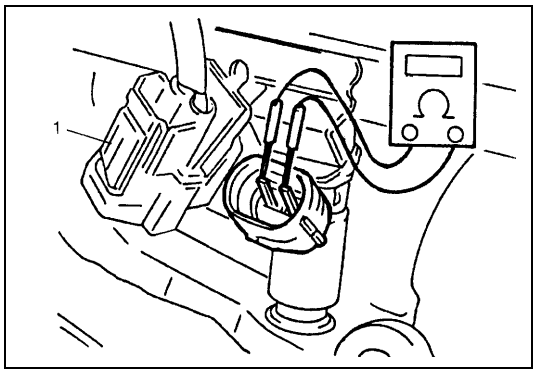

2) Disconnect connector (1) from injector, connect ohmmeter between terminals of injector and check resistance.
   If resistance is out of specification, replace.

   Resistance of fuel injector
   : 11.3 – 13.8 Ω at 20°C (68°F)

3) Connect connector (1) to injector securely.

REMOVAL

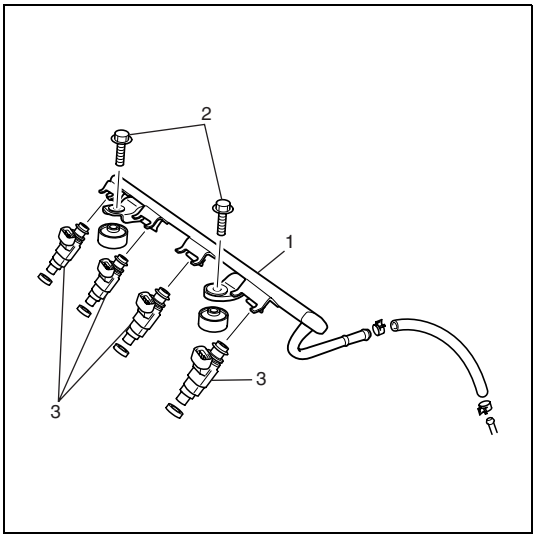

1) Relieve fuel pressure according to procedure described in Section 6.
2) Disconnect battery negative cable at battery.
3) Disconnect IAT sensor connector and remove air cleaner assembly with air cleaner outlet hose.
4) Disconnect fuel injector couplers.
5) Disconnect fuel feed hose from fuel delivery pipe (1).
6) Remove fuel delivery pipe bolts (2).
7) Remove fuel injector(s) (3).

CAUTION:
A small amount of fuel may come out after removal of fuel injectors, cover them with shop cloth.

INSPECTION

WARNING:
As fuel is injected in this inspection, perform in a well ventilated area and away from open flames.
Use special care to prevent sparking when connecting and disconnecting test lead to and from battery.

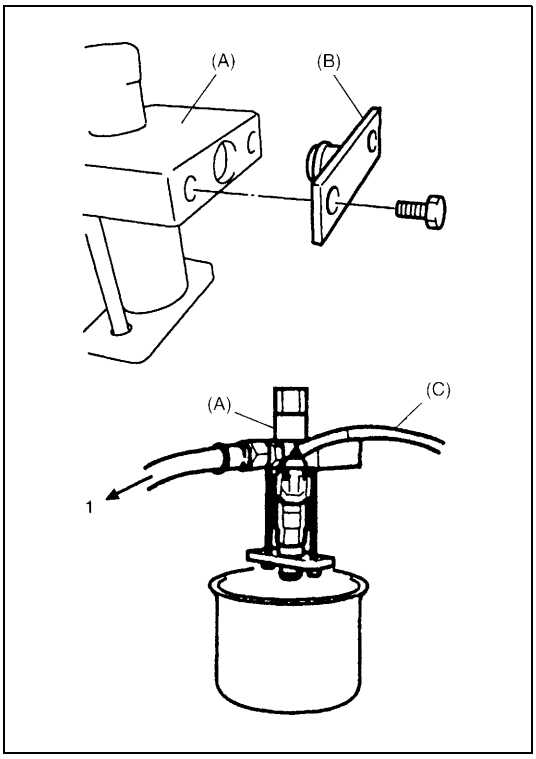

1) Install injector to special tool (injector checking tool).

Special tool
(A) : 09912-58421
(B) : 09912-57610

2) Connect special tools (hose and attachment) to fuel feed pipe (1) of vehicle.
3) Connect special tool (test lead) to injector.

Special tool
(C) : 09930-88530

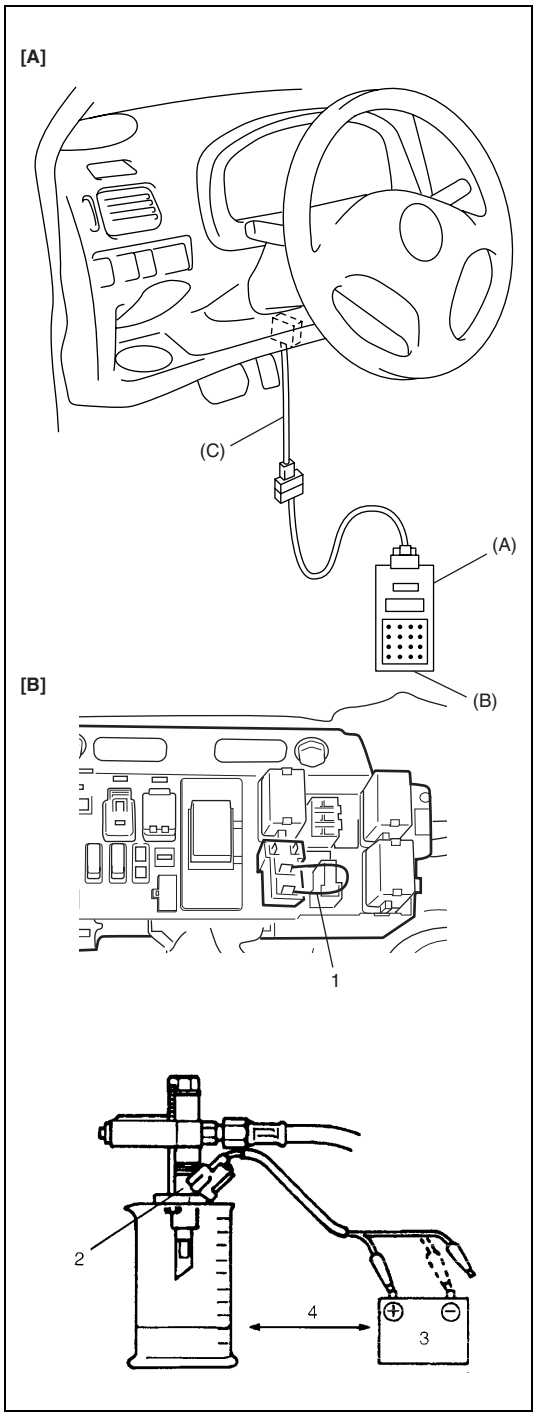

4) Install suitable vinyl tube onto injector nozzle to prevent fuel from splashing out when injecting.
5) Put graduated cylinder under injector as shown.
6) Operate fuel pump and apply fuel pressure to injector as follows:
7) When using SUZUKI scan tool :
   a) Connect SUZUKI scan tool to DLC with ignition switch OFF.
   b) Turn ignition switch ON, clear DTC and select “MISC TEST” mode on SUZUKI scan tool.
   c) Turn fuel pump ON by using SUZUKI scan tool.

(A) : 09931-76011 (SUZUKI scan tool)
(B) : Mass storage cartridge
(C) : 09931-76030 (16/14 pin DLC cable)

8) Without using SUZUKI scan tool :
   a) Remove fuel pump relay from connector.
   b) Connect two terminals of relay connector using service wire (1) as shown in figure.

CAUTION:
Check to make sure that connection is made between correct terminals. Wrong connection can cause damage to ECM, wire harness, etc.

   c) Turn ignition switch ON.
9) Apply battery voltage (3) to injector (2) for 15 seconds and measure injected fuel volume with graduated cylinder.
   Test each injector two or three times.
   If not within specification, replace injector.

Injected fuel volume
: 43 – 47 cc/15 sec. (1.45/1.51 – 1.58/ 1.65 US/Imp. oz/15 sec.)

4. Keep as far apart as possible
[A] : When using SUZUKI scan tool
[B] : When not using SUZUKI scan tool

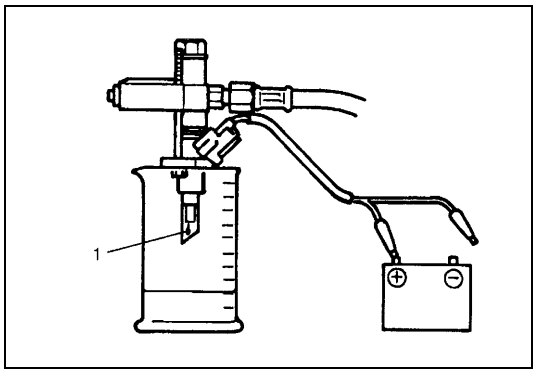

10) Check fuel leakage from injector nozzle. Do not operate injector for this check (but fuel pump should be at work).
    If fuel leaks (1) more than following specifications, replace.

Fuel leakage (1)
: Less than 1 drop/min.

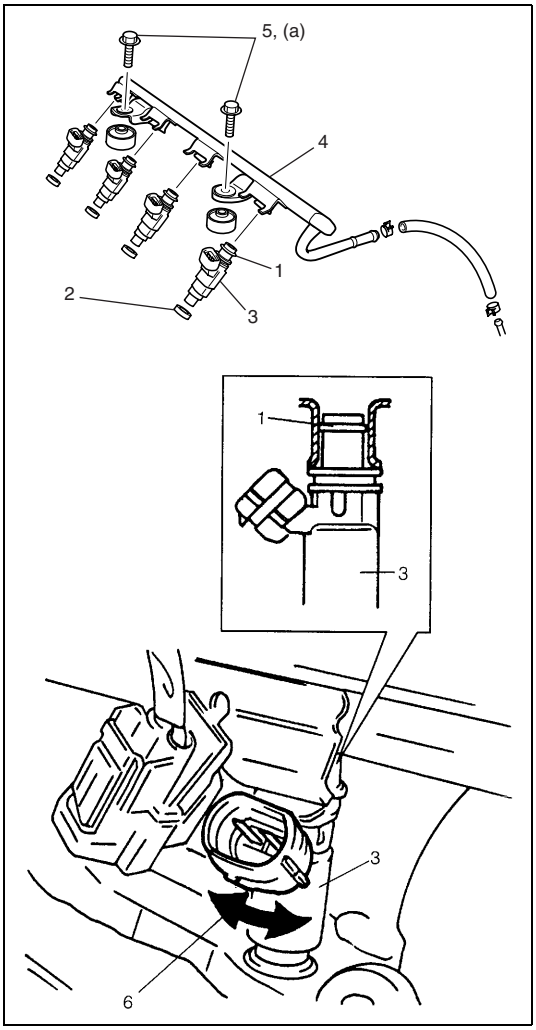

INSTALLATION

For installation, reverse removal procedure and note following precautions.

- Replace injector O-ring (1) with new one using care not to damage it.
- Check if cushion (2) is scored or damaged. If it is, replace with new one.
- Apply thin coat of fuel to O-rings (1) and then install injectors (3) into delivery pipe (4) and intake manifold.
  Make sure that injectors (3) rotate smoothly (6). If not, probable cause is incorrect installation of O-ring (1). Replace O-ring (1) with new one.
- Tighten delivery pipe bolts (5) and make sure that injectors (3) rotate smoothly (6).

Tightening torque
Delivery pipe bolts (a) : 28 N·m (2.8 kg-m, 20.5 lb-ft)

- After installation, with engine “OFF” and ignition switch “ON”, check for fuel leaks around fuel line connection.

ELECTRONIC CONTROL SYSTEM

ENGINE CONTROL MODULE (ECM)

CAUTION:
As ECM consists of precision parts, be careful not to expose it to excessive shock.

REMOVAL

1) Disconnect battery negative cable at battery.
2) Disable air bag system, referring to “Disabling The Air Bag System” in Section 10B if equipped.
3) Disconnect ECM (1) and TCM (2) (if equipped) connectors.
4) Remove bolt and nuts, remove ECM and TCM (if equipped).

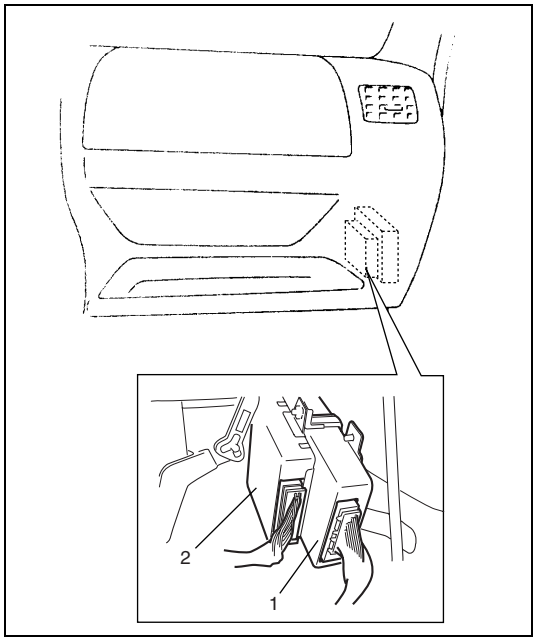

INSTALLATION

Reverse removal procedure noting the following:

- Connect connectors to ECM and TCM (if equipped) securely.

MANIFOLD ABSOLUTE PRESSURE SENSOR (MAP SENSOR)

INSPECTION

Check MAP sensor referring to “MAP Sensor Individual Check” in DTC P0105 (No.11) Flow Table. If malfunction is found, replace.

THROTTLE POSITION SENSOR (TP SENSOR)

INSPECTION

1) Disconnect negative cable at battery and connector from IAT sensor.
2) Remove air cleaner assembly with air cleaner outlet hose and disconnect TP sensor connector.
3) Using ohmmeter, check resistance between terminals under each condition given in table below.
   If check result is not satisfactory, replace TP sensor.

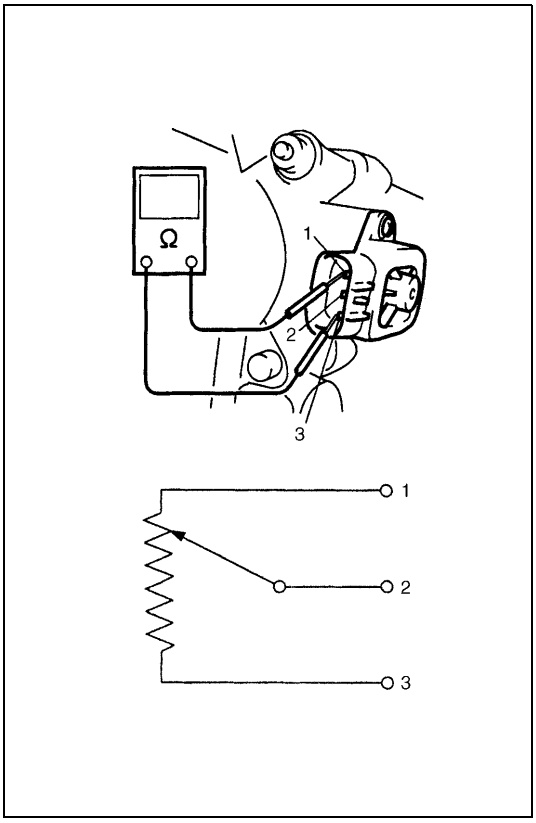

1. Reference voltage terminal
2. Output voltage terminal
3. Ground terminal

TP sensor resistance

TERMINALS	RESISTANCE
Between 1 and 3 terminals	4.0 – 6.0 kΩ
Between 2 and 3 terminals	20 Ω – 6.0 kΩ, varying according to throttle valve opening.

NOTE:

There should be more than 2 kΩ resistance difference between when throttle valve is at idle position and when it is fully open.

4) Connect TP sensor connector securely.
5) Connect negative cable to battery.

REMOVAL

1) Disconnect battery negative cable at battery.
2) Remove throttle body from intake manifold referring to "Throttle Body Removal" in this section.
3) Remove TP sensor from throttle body.

INSTALLATION

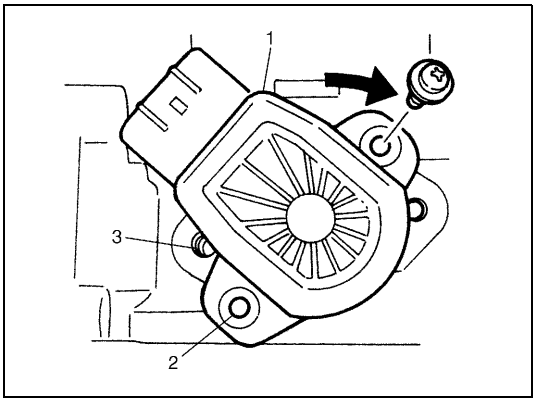

1) Install TP sensor (1) to throttle body.
   Fit TP sensor to throttle body in such way that its holes (3) are a little away from TP sensor screw holes (2) as shown in left figure and turn TP sensor clockwise so that those holes align (4).

Tightening torque
TP sensor screw (a) : 2.5 N·m (0.25 kg-m, 1.8 lb-ft)

2) Connect connector to TP sensor securely.
3) Connect battery negative cable to battery.

INTAKE AIR TEMPERATURE SENSOR (IAT SENSOR)

REMOVAL

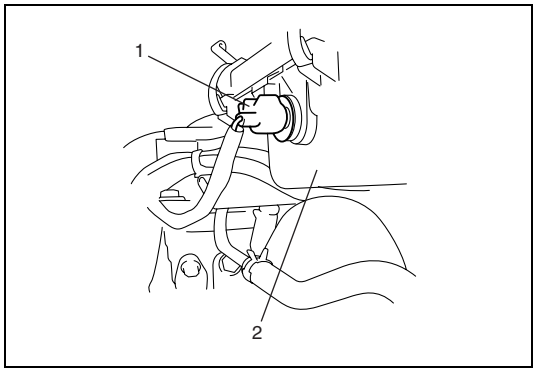

1) Disconnect battery negative cable at battery.
2) Disconnect coupler (1) from IAT sensor.
3) Remove IAT sensor from air cleaner case (2).

INSPECTION

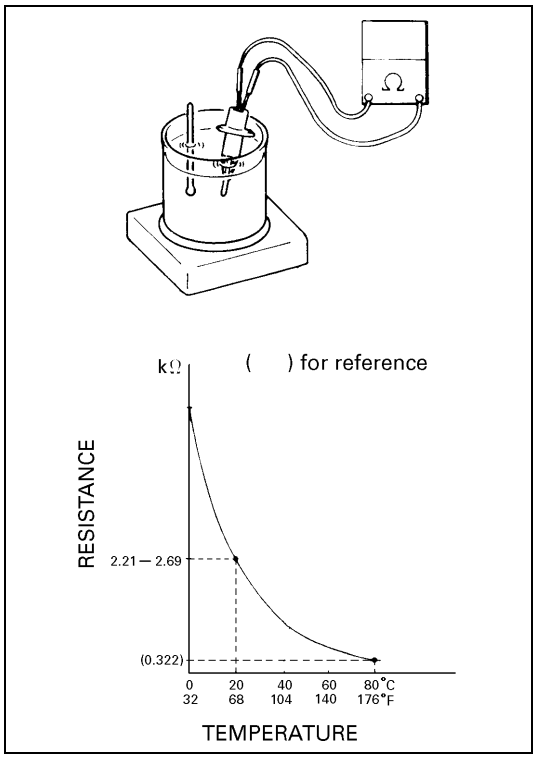

Immerse temperature sensing part of IAT sensor in water (or ice) and measure resistance between sensor terminals while heating water gradually.
If measured resistance does not show such characteristic as shown in left figure, replace IAT sensor.

INSTALLATION

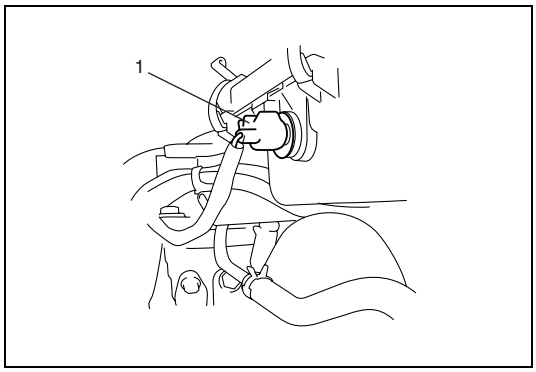

Reverse removal procedure noting the following.

- Clean mating surfaces of IAT sensor and air cleaner case.
- Connect IAT sensor connector (1) securely.

ENGINE COOLANT TEMPERATURE SENSOR (ECT SENSOR)

REMOVAL

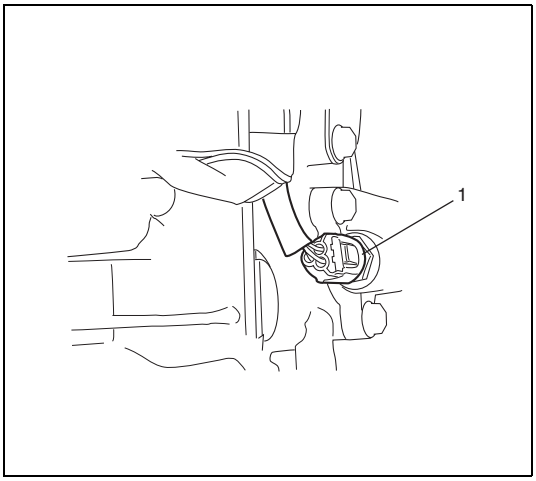

1) Disconnect battery negative cable at battery.
2) Drain coolant referring to Section 6B.

WARNING:
To help avoid danger of being burned, do not remove radiator cap while engine and radiator are still hot. Scalding fluid and steam can be blown out under pressure if cap is taken off too soon.

3) Remove air intake pipe.
4) Disconnect connector from ECT sensor.
5) Remove ECT sensor (1) from thermostat case.

INSPECTION

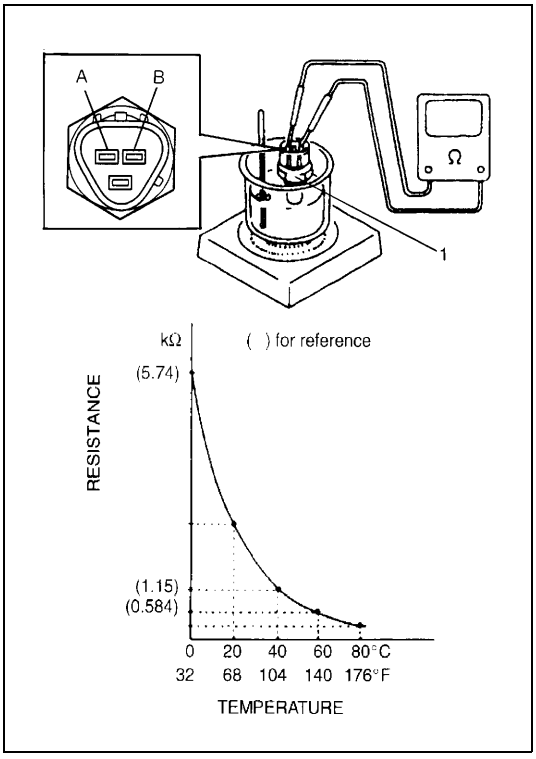

Immerse temperature sensing part of ECT sensor (1) in water (or ice) and measure resistance between terminal “A” and “B” while heating water gradually.
If measured resistance does not show such characteristic as shown in left figure, replace ECT sensor (1).

INSTALLATION

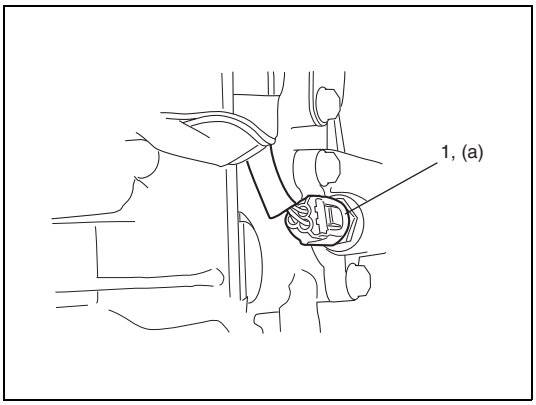

Reverse removal procedure noting the following:

- Clean mating surfaces of ECT sensor (1) and thermostat case.
- Check O-ring for damage and replace if necessary.
- Tighten ECT sensor (1) to specified torque.

Tightening torque
ECT sensor (a) : 15 N·m (1.5 kg-m, 11.5 lb-ft)

- Connect connector to ECT sensor (1) securely.
- Refill coolant referring to Section 6B.

HEATED OXYGEN SENSOR (HO2S-1 AND HO2S-2)

OXYGEN SENSOR HEATER INSPECTION

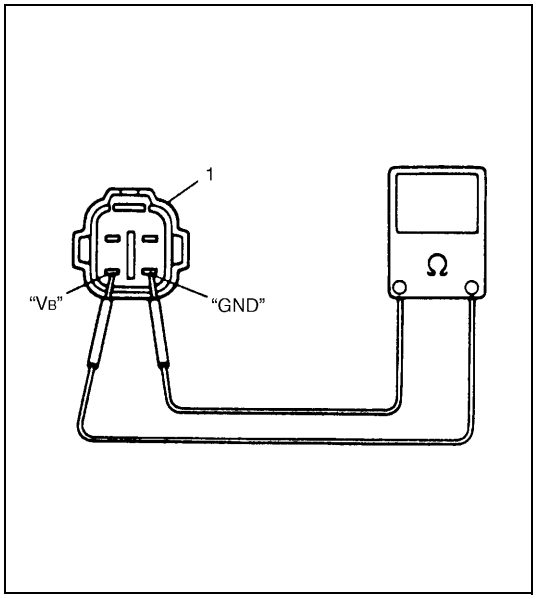

1) Disconnect sensor connector.
2) Using ohmmeter, measure resistance between terminals "V_B" and "GND" of sensor connector.
   If found faulty, replace oxygen sensor.

NOTE:

Temperature of sensor affects resistance value largely. Make sure that sensor heater is at correct temperature.

Resistance of oxygen sensor heater
HO2S-1 : 5.0 – 6.4 Ω at 20°C (68°F)
HO2S-2 : 11.7 – 14.3 Ω at 20°C (68°F)

3) Connect sensor connector securely.

1. Viewed from terminal side

REMOVAL

WARNING:

To avoid danger of being burned, do not touch exhaust system when system is hot. Oxygen sensor removal should be performed when system is cool.

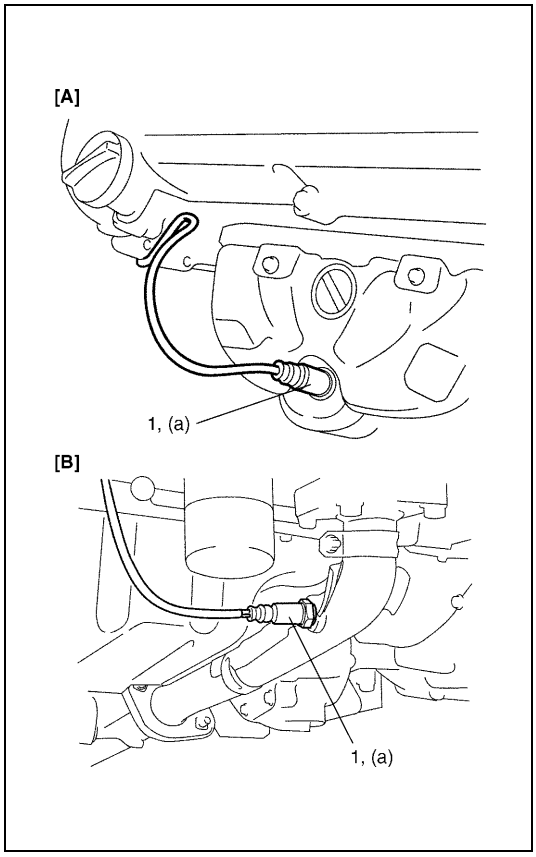

1) Disconnect negative cable at battery.
2) For HO2S-1, disconnect connector of heated oxygen sensor and release its wire harness from clamps, then remove front bumper and heat insulator panel.
3) For HO2S-2, disconnect connector of heated oxygen sensor and release its wire harness from clamp and hoist vehicle.
4) Remove heated oxygen sensor (1) from exhaust manifold or exhaust pipe.

INSTALLATION

Reverse removal procedure noting the following.

- Tighten heated oxygen sensor (1) to specified torque.

Tightening torque
Heated oxygen sensor (a) : 45 N·m (4.5 kg-m, 32.5 lb-ft)

- Connect connector of heated oxygen sensor (1) and clamp wire harness securely.
- After installing heated oxygen sensor (1), start engine and check that no exhaust gas leakage exists.

[A] : HO2S-1
[B] : HO2S-2

CAMSHAFT POSITION SENSOR

INSPECTION

Check camshaft position sensor referring to DTC P0340 (No.15) Diag. Flow Table in Section 6. If malfunction is found, replace.

REMOVAL

1) Disconnect negative cable at battery.
2) Disconnect connector from camshaft position sensor.
3) Remove camshaft position sensor from cylinder head.

INSTALLATION

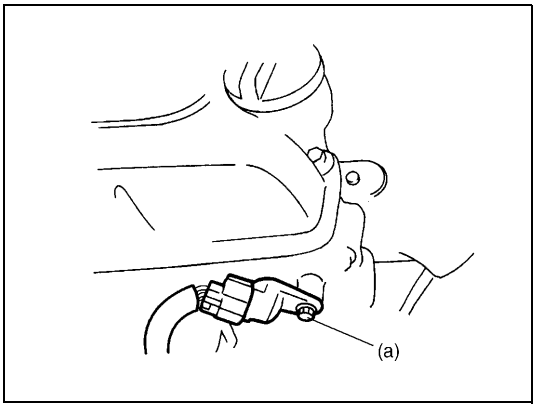

1) Check that O-ring is free from damage.
2) Check that camshaft position sensor and signal rotor teeth are free from any metal particles and damage.
3) Install camshaft position sensor to cylinder head.

Tightening torque
Camshaft position sensor bolt
(a) : 10 N·m (1.0 kg-m, 7.5 lb-ft)

4) Connect connector to it securely.
5) Connect negative cable to battery.

CRANKSHAFT POSITION SENSOR

INSPECTION

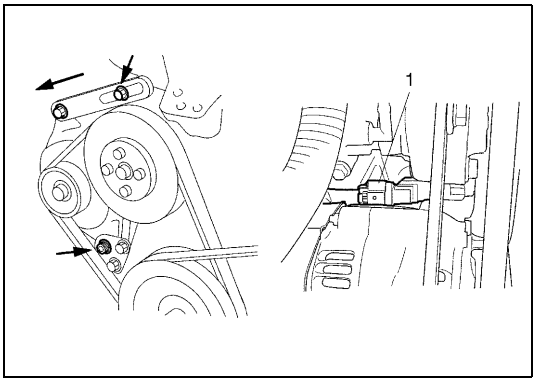

Check crankshaft position sensor referring to step 1 and 2 of DTC P0335 (No.23) Flow Table. If malfunction is found, replace.

REMOVAL

1) Disconnect negative cable at battery.
2) Remove generator drive belt, loosen pivot bolt and move generator outward.
3) Disconnect connector from crankshaft position sensor.
4) Remove crankshaft position sensor (1) from cylinder block.

INSTALLATION

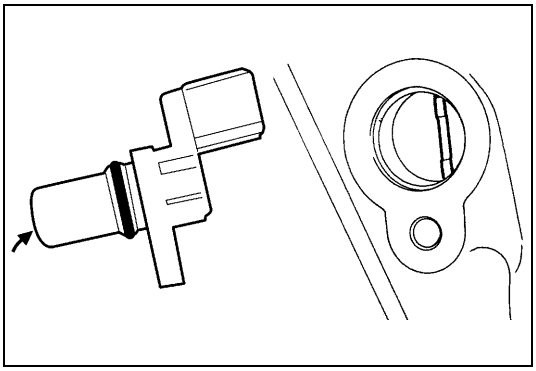

1) Check to make sure that crankshaft position sensor and pulley teeth are free from any metal particles and damage.
2) Install crankshaft position sensor to cylinder block.
3) Connect connector to it securely.
4) Adjust generator belt tension, refer to Section 6B.
5) Connect negative cable to battery.

VEHICLE SPEED SENSOR (VSS)

INSPECTION

Check vehicle speed sensor referring to step 3 of DTC P0500 (No.16) Flow Table. If malfunction is found, replace.

REMOVAL/INSTALLATION

Refer to Section 7A.

FUEL LEVEL SENSOR (GAUGE)

INSPECTION

Refer to Section 8.

REMOVAL/INSTALLATION

Refer to Section 6C.

KNOCK SENSOR (IF EQUIPPED)

INSPECTION

Check knock sensor referring to DTC P0325 (No.17) Flow Table. If malfunction is found, replace.

REMOVAL/INSTALLATION

Refer to Section 6A.

MAIN RELAY, FUEL PUMP RELAY AND RADIATOR FAN RELAY NO.1

INSPECTION

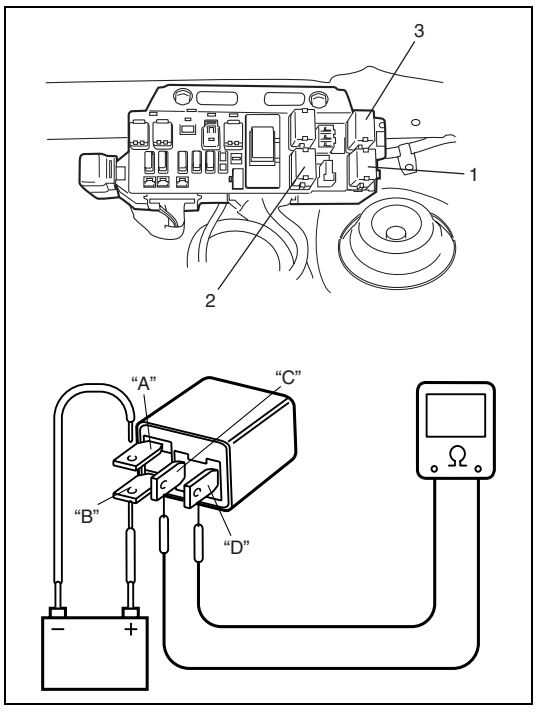

1) Disconnect negative cable at battery.
2) Remove main relay (1), fuel pump relay (2) and radiator fan control relay No.1 (3) from vehicle.
3) Check that there is no continuity between terminal "C" and "D". If there is continuity, replace relay.
4) Connect battery positive (+) terminal to terminal "B" of relay. Connect battery negative (–) terminal "A" of relay. Check continuity between terminal "C" and "D". If there is no continuity when relay is connected to the battery, replace relay.

FUEL CUT OPERATION

INSPECTION

NOTE:

Before inspection, check to make sure that gear shift lever is in neutral position (with A/T model, selector lever in "P" range), A/C is OFF and that parking brake lever is pulled all the way up.

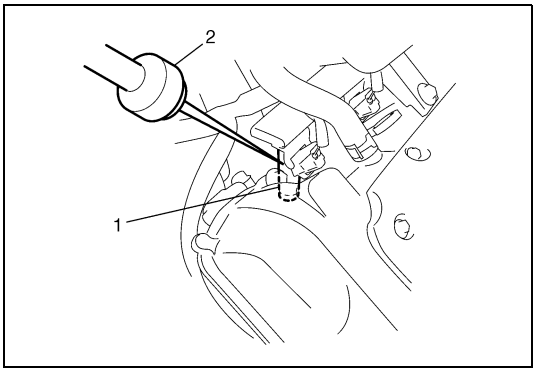

1) Warm up engine to normal operating temperature.
2) While listening to sound of injector (1) by using sound scope (2) or such, increase engine speed to higher than 3,000 r/min.
3) Check to make sure that sound to indicate operation of injector stops when throttle valve is closed instantly and it is heard again when engine speed is reduced to less than about 2,000 r/min.

RADIATOR FAN CONTROL SYSTEM

SYSTEM INSPECTION

WARNING:

Keep hands, tools, and clothing away from engine cooling fan to help prevent personal injury. This fan is electric and can come on whether or not the engine is running. The fan can start automatically in response to the ECT sensor with the ignition switch in the "ON" position.

Check system for operation referring to Flow Table B-7 in Section 6.

If radiator fan fails to operate properly, check relay, radiator fan and electrical circuit.

RADIATOR FAN RELAY NO. 2 AND NO.3

INSPECTION

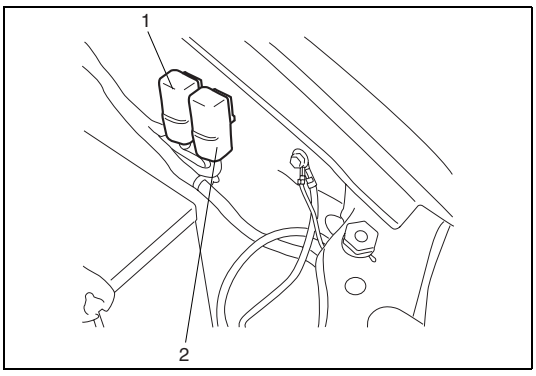

1) Disconnect negative cable at battery.
2) Remove relay(s) from connector(s).

1. Radiator fan relay No. 2
2. Radiator fan relay No. 3

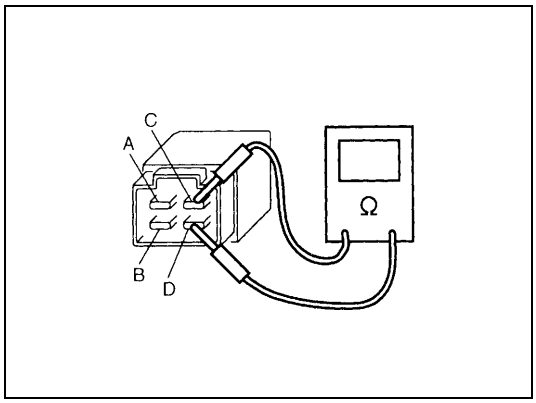

3) Check resistance between each two terminals as in table below.
   If check results are as specified, proceed to next operation check. If not, replace.

Radiator fan relay No.2 and No.3 resistance

TERMINALS	RESISTANCE
Between A and B	**∞ (Infinity)**
Between C and D	**70 – 110 Ω at 20°C (68°F)**

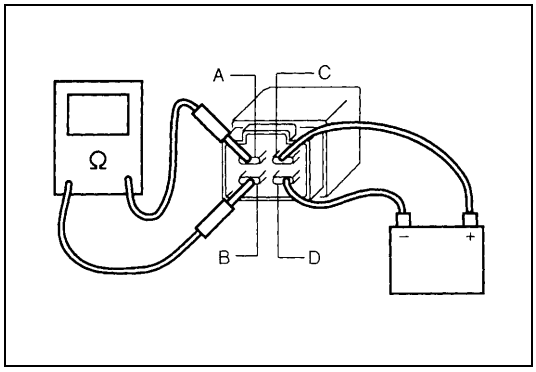

4) Check that there is continuity between terminals “A” and “B” when battery is connected to terminals “C” and “D”.
   If malfunction is found, replace.

RADIATOR FAN INSPECTION

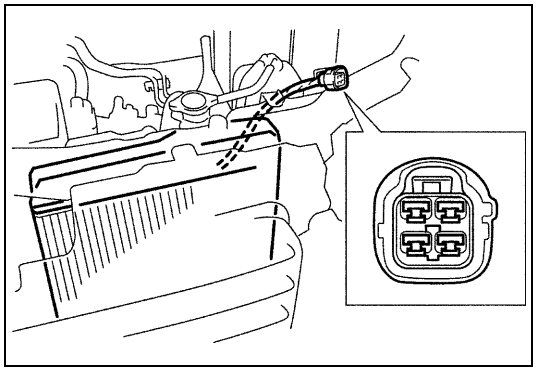

1) Check continuity between each terminals.
   If there is no continuity, replace radiator fan motor.

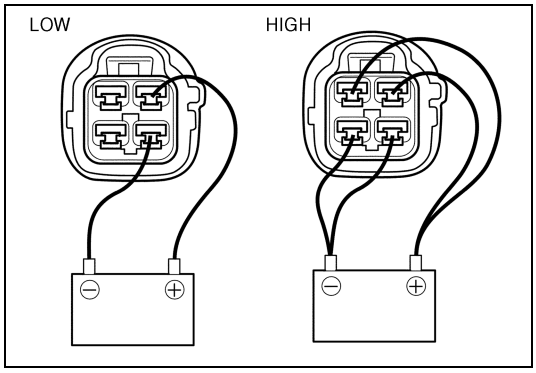

2) Connect battery to radiator fan motor coupler as shown in figure, then check that the radiator fan motor operates smoothly and that fan speed varies.
   If radiator fan motor does not operate smoothly, replace motor.

OUTPUT SIGNALS OF THROTTLE VALVE OPENING AND ENGINE COOLANT TEMP. (VEHICLE WITH A/T ONLY)

THROTTLE VALVE OPENING SIGNAL INSPECTION

Check throttle valve opening (throttle position) signal referring to step 1 of DTC P1700 (No.32 or 33) Flow Table in Section 7B. If check result is not satisfactory, check each wire harness, circuit connections and TP sensor.

ENGINE COOLANT TEMP. SIGNAL INSPECTION

Check engine coolant temp. signal referring to step 1 of DTC P1705 (NO.51) Flow Table in Section 7B.
If check result is not satisfactory, check each wire harness, circuit connection and ECT sensor.

EMISSION CONTROL SYSTEM

EGR SYSTEM

SYSTEM INSPECTION (USING SUZUKI SCAN TOOL)

1) Connect SUZUKI scan tool to DLC with ignition switch OFF.
2) Turn ignition switch ON and then select “DATA LIST” mode on scan tool.
3) Make sure that vehicle condition is as following.
   - Vehicle speed = 0 km/h (0 KPH)
   - Engine speed ≤ 3000 rpm
4) Clear DTC by using “CLEAR INFO” mode.
5) With engine idling (without depressing accelerator pedal), open EGR valve by using “STEP EGR” mode in “MISC TEST” menu. In this state, according as EGR valve opening increases engine idle speed drops. If not, possible cause is clogged EGR gas passage, stuck or faulty EGR valve, poor performance of ECT sensor or TP sensor or DTC and/or pending DTC is (are) stored in ECM memory.

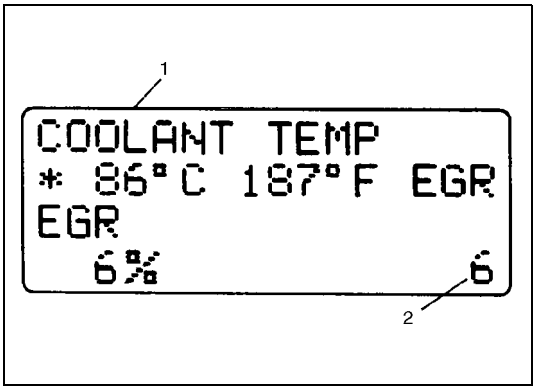

1. SUZUKI scan tool display
2. EGR valve opening (0: Close, 100: Full Open)

REMOVAL

1) Disconnect negative cable at battery.
2) Remove air intake pipe.
3) Remove EGR pipe.
4) Disconnect EGR valve connector.
5) Remove EGR valve and gasket from intake manifold.

INSPECTION

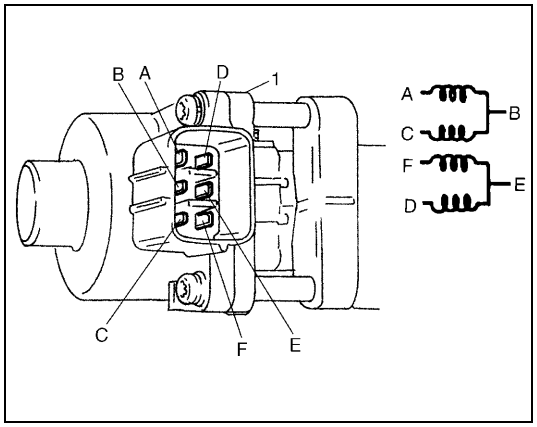

1) Check resistance between following terminals of EGR valve (1) in each pair.
   If found faulty, replace EGR valve assembly.

EGR valve resistance

Terminal	Standard resistance
A – B **C – B** **F – E** **D – E**	**20 – 24 Ω**

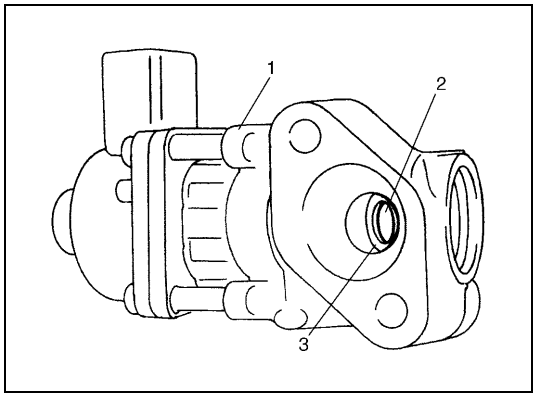

2) Remove carbon from EGR valve gas passage.

NOTE:

Do not use any sharp–edged tool to remove carbon.
Be careful not to damage or bend EGR valve (1), valve seat (3) and rod.

3) Inspect valve (2), valve seat and rod for fault, cracks, bend or other damage.
   If found faulty, replace EGR valve assembly.

INSTALLATION

Reverse removal procedure noting following.

- Clean mating surface of valve and intake manifold.
- Use new gaskets.

EVAPORATIVE EMISSION CONTROL SYSTEM

EVAP CANISTER PURGE INSPECTION

NOTE:

Before inspection, check to make sure that gear shift lever is in neutral position (with A/T model, selector lever in "P" range) and that parking brake lever is pulled all the way up.

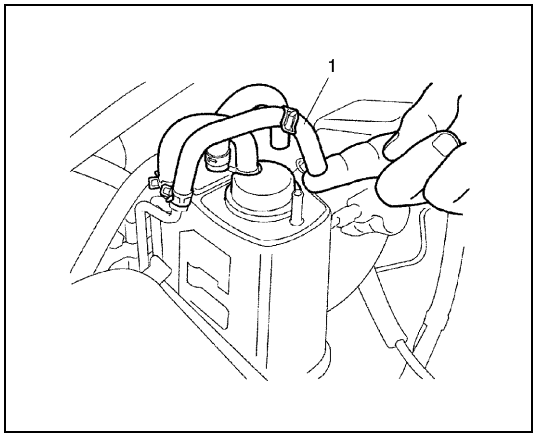

1) Disconnect purge hose (1) from EVAP canister.
2) Place finger against the end of disconnected hose and check that vacuum is not felt there when engine is cool and running at idle speed.

3) Connect purge hose to EVAP canister and warm up engine to normal operating temperature.
4) Disconnect purge hose from EVAP canister.
5) Also check that vacuum is felt when engine is running at idle speed.
   If check result is not satisfactory, check vacuum passage, hoses, EVAP canister purge valve, wire harness and ECM.

NOTE:

The EVAP canister purge system does not perform purging (vacuum is not detected at the purge hose) unless the engine is sufficiently warmed up and the heated oxygen sensor is activated fully. Also, when the purge hose is disconnected in Step 4), the air is drawn into the purge line. As a result, ECM detects a change in the purge gas concentration and sometimes stops purging but this indicates nothing abnormal.

VACUUM PASSAGE INSPECTION

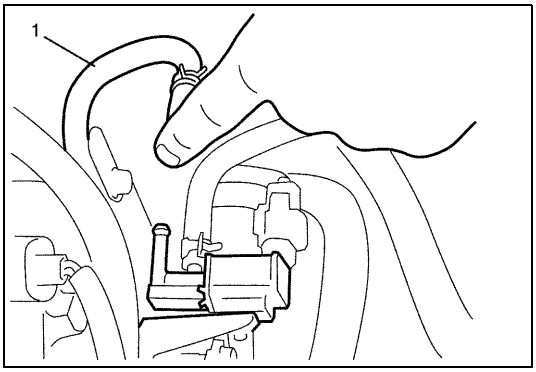

Start engine and run it at idle speed. Disconnect vacuum hose (1) from EVAP canister purge valve (2). With finger placed against hose disconnected, check that vacuum is applied.
If it is not applied, clean vacuum passage by blowing compressed air.

VACUUM HOSE INSPECTION

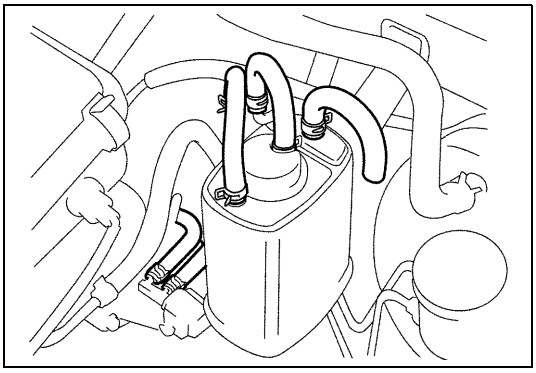

Check hoses for connection, leakage, clog and deterioration. Replace as necessary.

EVAP CANISTER PURGE VALVE INSPECTION

Check EVAP canister purge valve referring to step 1 of DTC P0443 Flow Table.
If found malfunction, replace.

EVAP CANISTER INSPECTION

WARNING:

DO NOT SUCK nozzles on EVAP canister. Fuel vapor inside EVAP canister is harmful.

1) Check outside of EVAP canister visually.
2) Disconnect vacuum hoses from EVAP canister.

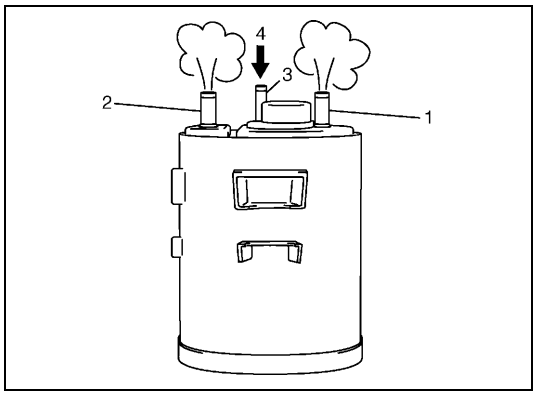

3) Check that there should be no restriction of flow through purge pipe (1) and air pipe (2) when air is blown (4) into tank pipe (3).
   If any faulty condition is found in above inspection, replace.

PCV SYSTEM

NOTE:

Be sure to check that there is no obstruction in PCV valve or its hoses before checking IAC duty, for obstructed PCV valve or hose hampers its accurate adjustment.

PCV HOSE INSPECTION

Check hoses for connection, leakage, clog and deterioration.
Replace as necessary.

PCV VALVE INSPECTION

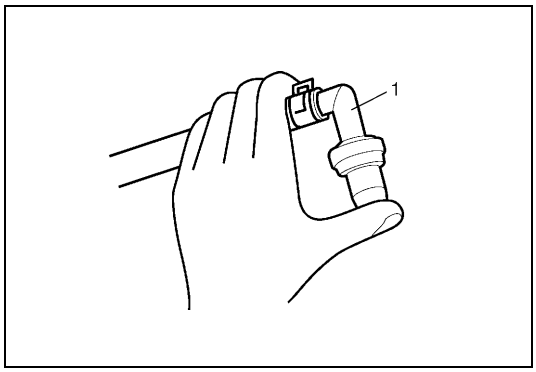

1) Disconnect PCV valve (1) from cylinder head cover and install plug to head cover hole.
2) Run engine at idle.
3) Place your finger over end of PCV valve (1) to check for vacuum.
   If there is no vacuum, check for clogged valve. Replace as necessary.

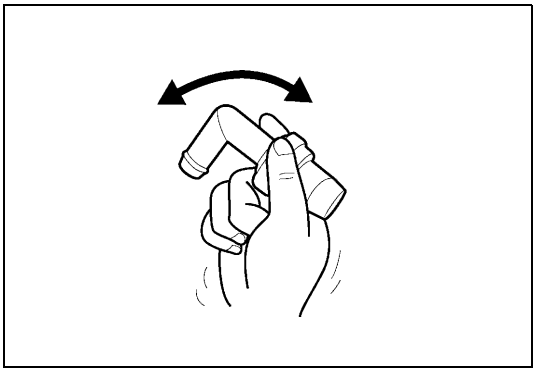

4) After checking vacuum, stop engine and remove PCV valve (1).
   Shake valve and listen for the rattle of check needle inside the valve. If valve does not the rattle, replace valve.
5) After checking, remove plug and install PCV valve (1).

SPECIAL TOOL

 09912-58441 Pressure gauge	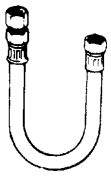 09912-58431 Pressure hose	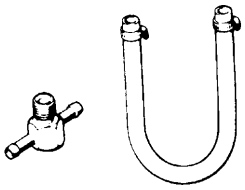 09912-58490 3-way joint & hose	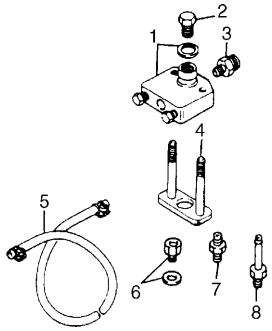 09912-58421 Checking tool set (See NOTE “A”.)
 09912-57610 Checking tool plate	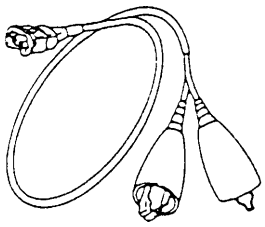 09930-88530 Injector test lead	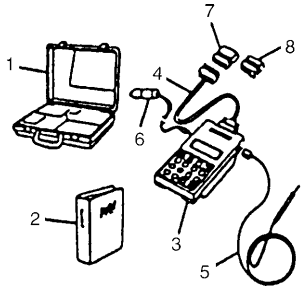 09931-76011 Tech 1A kit (See NOTE “B”.)	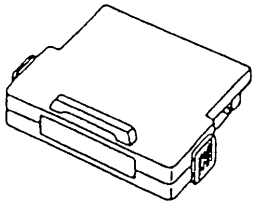 Mass storage cartridge

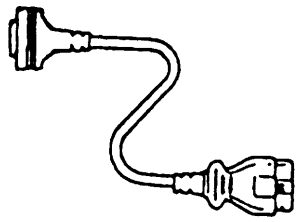

09931-76030
16/14 pin DLC cable

NOTE:

- **"A": This kit includes the following items.**
  1. Tool body & washer, 2. Body plug, 3. Body attachment-1, 4. Holder, 5. Return hose & clamp, 6. Body attachment-2 & washer, 7. Hose attachment-1, 8. Hose attachment-2
- **"B": This kit includes the following items.**
  1. Storage case, 2. Operator's manual, 3. Tech 1A, 4. DLC cable (14/26 pin, 09931-76040), 5. Test lead/probe, 6. Power source cable, 7. DLC cable adaptor, 8. Self-test adaptor

TIGHTENING TORQUE SPECIFICATION

Fastening part	Tightening torque		
	N•m	kg-m	lb-ft
TP sensor mounting screw	2.5	0.25	1.8
IAC valve	3.5	0.35	2.5
ECT sensor	15	1.5	11.5
Heated oxygen sensor-1 and -2	45	4.5	32.5
Camshaft position sensor	10	1.0	7.5

SECTION 6F1

IGNITION SYSTEM (ELECTRONIC IGNITION SYSTEM)

WARNING:

For vehicles equipped with Supplemental Restraint (Air Bag) System:

- **Service on and around the air bag system components or wiring must be performed only by an authorized SUZUKI dealer. Refer to "Air Bag System Components and Wiring Location View" under "General Description" in air bag system section in order to confirm whether you are performing service on or near the air bag system components or wiring. Please observe all WARNINGS and "Service Precautions" under "On-Vehicle Service" in air bag system section before performing service on or around the air bag system components or wiring. Failure to follow WARNINGS could result in unintentional activation of the system or could render the system inoperative. Either of these two conditions may result in severe injury.**
- **Technical service work must be started at least 90 seconds after the ignition switch is turned to the "LOCK" position and the negative cable is disconnected from the battery. Otherwise, the system may be activated by reserve energy in the Sensing and Diagnostic Module (SDM).**

CONTENTS

GENERAL DESCRIPTION 6F1-2
DIAGNOSIS 6F1-3
ON-VEHICLE SERVICE 6F1-5
IGNITION SPARK TEST 6F1-5
HIGH-TENSION CORDS 6F1-5
SPARK PLUGS 6F1-6
IGNITION COIL ASSEMBLY (INCLUDING IGNITOR) 6F1-7
CRANKSHAFT POSITION SENSOR (CKP SENSOR) 6F1-7
IGNITION TIMING 6F1-8
SPECIAL TOOL 6F1-9

GENERAL DESCRIPTION

The ignition system is an electronic (distributorless) ignition system. Its consists of the parts as described below and has an electronic ignition control system.

- ECM
  It detects the engine and vehicle conditions through the signals from the sensors, determines the most suitable ignition timing and time for electricity to flow to the primary coil and sends a signal to the ignitor (power unit) in the ignition coil assembly.
- Ignition coil assembly (including an igniter)
  The ignition coil assembly has a built-in ignitor which turns ON and OFF the current flow to the primary coil according to the signal from ECM. When the current flow to the primary coil is turned OFF, a high voltage is induced in the secondary coil.
- High tension cords and spark plugs.
- CMP sensor (Camshaft position sensor) and CKP sensor (Crankshaft position sensor)
  Using signals from these sensors, ECM identifies the specific cylinder whose piston is in the compression stroke, detects the crank angle and adjusts initial ignition timing automatically.
- TP sensor, ECT sensor, MAP sensor and other sensors/switches
  Refer to Section 6E1 for details.

Although this ignition system does not have a distributor, it has two ignition coil assemblies (one is for No.1 and No.4 spark plugs and the other is for No.2 and No.3 spark plugs). When an ignition signal is sent from ECM to the ignitor in the ignition coil assembly for No.1 and No.4 spark plugs, a high voltage is induced in the secondary coil and that passes through the high-tension cords and causes No.1 and No.4 spark plugs to spark simultaneously. Likewise, when an ignition signal is sent to the ignitor in the other ignition coil assembly, No.2 and No.3 spark plugs spark simultaneously.

SYSTEM COMPONENTS

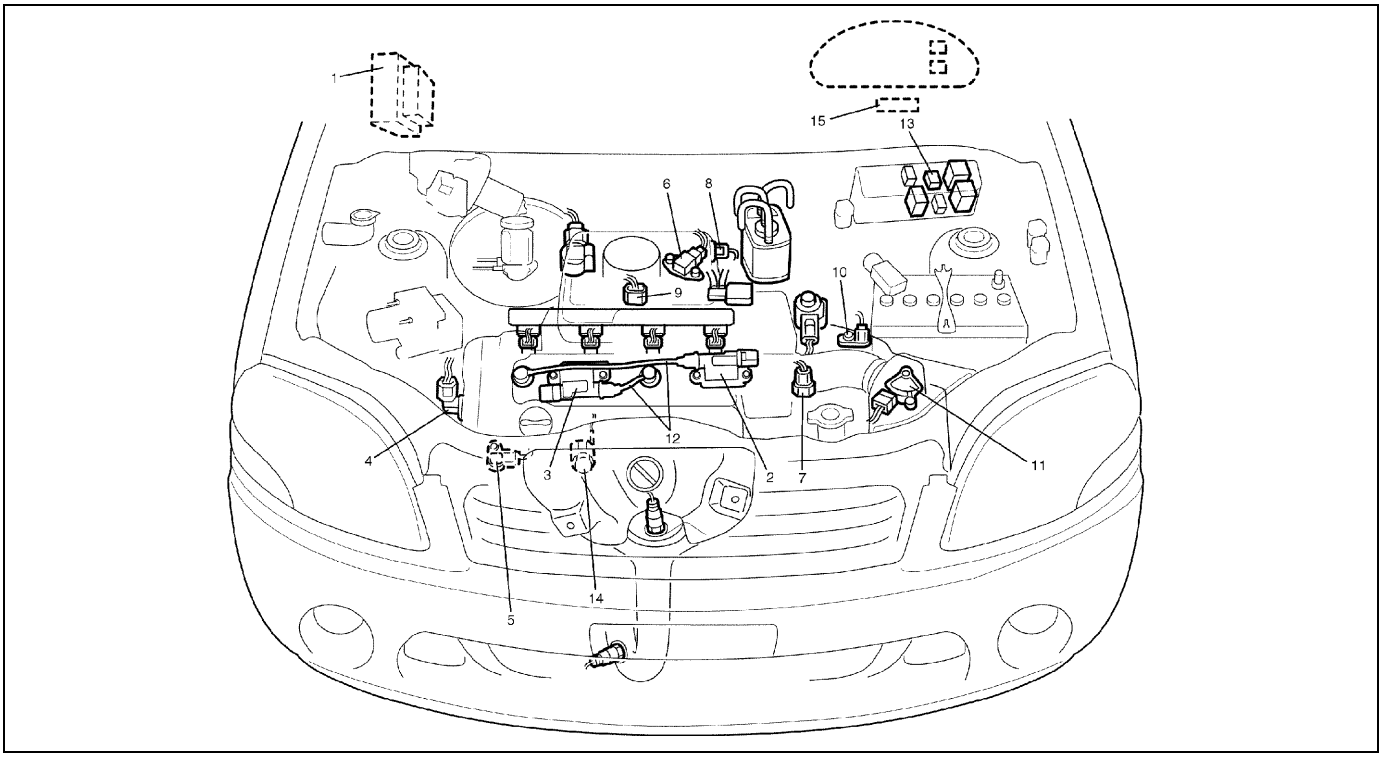

1. ECM	6. MAP sensor	11. Transmission range switch (A/T)
2. Ignition coil assembly for No.1 and No.4 spark plugs	7. ECT sensor	12. High-tension cords
3. Ignition coil assembly for No.2 and No.3 spark plugs	8. IAT sensor	13. Monitor connector
4. CMP sensor	9. TP sensor	14. Knock sensor (if equipped)
5. CKP sensor	10. VSS	15. Data link connector

SYSTEM WIRING DIAGRAM

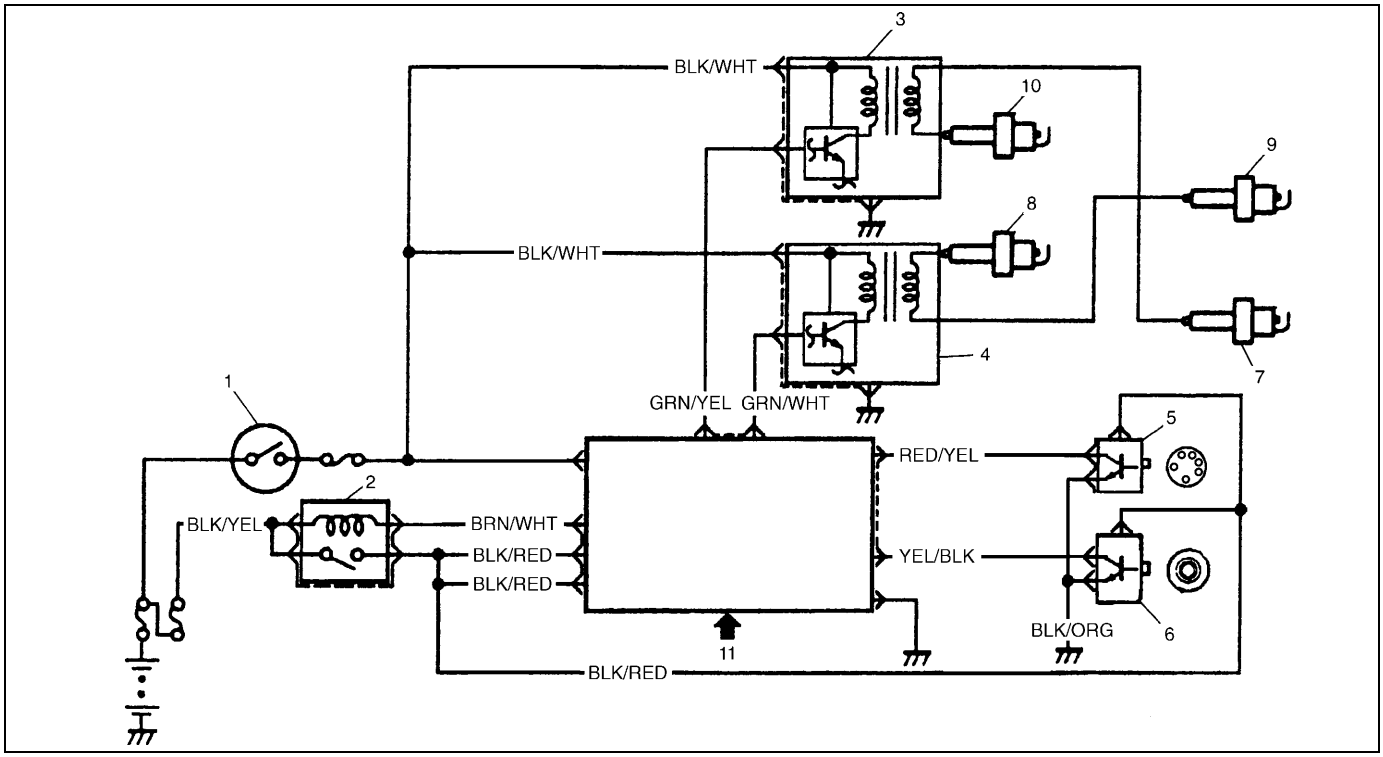

1. Ignition switch	7. No.1 spark plug
2. Main relay	8. No.2 spark plug
3. Ignition coil assembly for No.1 and No.4 spark plugs	9. No.3 spark plug
4. Ignition coil assembly for No.2 and No.3 spark plugs	10. No.4 spark plug
5. CMP sensor	11. Sensed information (MAP sensor, ECT sensor, IAT sensor, TP sensor, Knock sensor (if equipped), VSS, Park/Neutral position signal, Electric load signal, Engine start signal, Test switch terminal (Vehicle without immobilizer indicator lamp))
6. CKP sensor	

DIAGNOSIS

Condition	Possible Cause	Correction
Engine cranks, but will not start or hard to start (No spark)	Blown fuse for ignition coil	Replace.
	Loose connection or disconnection of lead wire or high-tension cord(s)	Connect securely.
	Faulty high-tension cord(s)	Replace.
	Faulty spark plug(s)	Adjust, clean or replace.
	Faulty ignition coil	Replace ignition coil assembly.
	Faulty CKP sensor or CKP sensor plate	Clean, tighten or replace.
	Faulty ECM	Replace.
Poor fuel economy or engine performance	Incorrect ignition timing	Check related sensors and CKP sensor plate.
	Faulty spark plug(s) or high-tension cord(s)	Adjust, clean or replace.
	Faulty ignition coil assembly	Replace.
	Faulty CKP sensor or CKP sensor plate	Clean, tighten or replace.
	Faulty ECM	Replace.

IGNITION SYSTEM DIAGNOSTIC FLOW TABLE

Step	Action	Yes	No
1	Was “ENGINE DIAG. FLOW TABLE” in Section 6 performed?	Go to Step 2.	Go to “ENGINE DIAG. FLOW TABLE” in Section 6.
2	Ignition Spark Test 1) Check all spark plugs for condition and type referring to “Spark Plugs” section. 2) If OK, perform ignition spark test, referring to “Ignition Spark Test” in this section. Is spark emitted from all spark plugs?	Go to Step 11.	Go to Step 3.
3	Diagnostic Trouble Code (DTC) Check Is DTC stored in ECM?	Go to applicable DTC Diag. Flow Table in Section 6.	Go to Step 4.
4	Electrical Connection Check 1) Check ignition coil assemblies and high-tension cords for electrical connection. Are they connected securely?	Go to Step 5.	Connect securely.
5	High-tension Cords Check 1) Check high-tension cord for resistance referring to “High-Tension Cords” in this section. Is check result satisfactory?	Go to Step 6.	Replace high-tension cord(s).
6	Ignition Coil Assembly Power Supply and Ground Circuit Check 1) Check ignition coil assembly power supply and ground circuits for open and short. Are circuits in good condition?	Go to Step 7.	Repair or replace.
7	Ignition Coil Assembly Check 1) Check ignition coil for resistance referring to “Ignition Coil Assembly” in this section. Is check result satisfactory?	Go to Step 8.	Replace ignition coil assembly.
8	Crankshaft Position (CKP) Sensor Check 1) Check crankshaft position sensor referring to Step 3 and 4 of “DTC P0335 (No.23) Diag. Flow Table” in Section 6. Is check result satisfactory?	Go to Step 9.	Tighten CKP sensor bolt, replace CKP sensor or CKP sensor plate.
9	Ignition Trigger Signal Circuit Check 1) Check ignition trigger signal wire for open, short and poor connection. Is circuit in good condition?	Go to Step 10.	Repair or replace.
10	A Known-good Ignition Coil Assembly Substitution 1) Substitute a known-good ignition coil assembly and then repeat Step 2. Is check result of Step 2 satisfactory?	Go to Step 11.	Substitute a known-good ECM and then repeat Step 2.
11	Ignition Timing Check 1) Check initial ignition timing and ignition timing advance referring to “Ignition Timing” in this section. Is check result satisfactory?	System is in good condition.	Check CKP sensor, CKP sensor plate and input signals related to this system.

ON-VEHICLE SERVICE

IGNITION SPARK TEST

1) Disconnect all injector couplers (1) from injectors.

WARNING:
Without disconnection of injector couplers, combustible gas may come out from spark plug holes during this test and may get ignited in engine room.

2) Remove spark plug and check it for condition and type referring to “Spark Plugs” in this section.

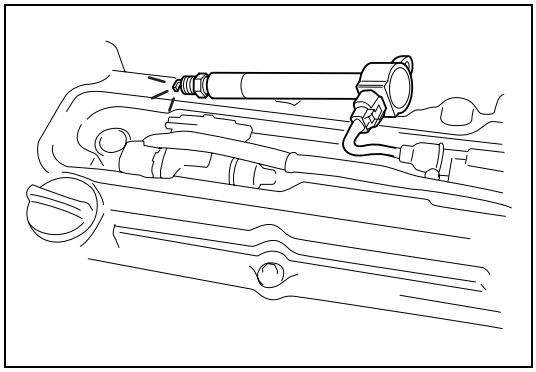

3) If OK, connect ignition coil coupler to ignition coil assembly and connect spark plug to ignition coil assembly or high-tension cord. Ground spark plug.
4) Crank engine and check if each spark plug sparks.
5) If no spark is emitted, inspect the related parts as described under “Diagnosis” earlier in this section.

HIGH-TENSION CORDS

1) Remove air intake pipe and cylinder head upper cover.

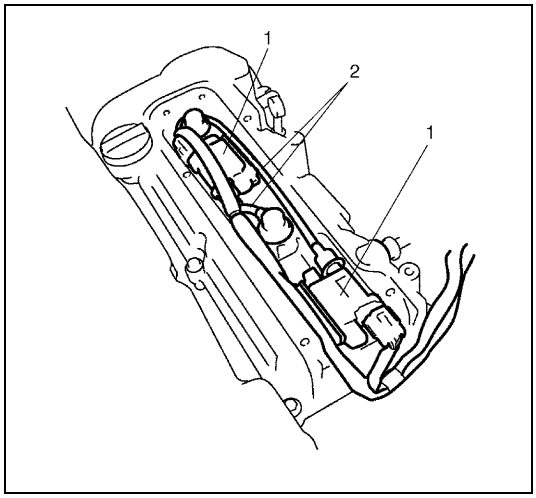

2) Disconnect high-tension cords (2) from ignition coil assemblies (1) while gripping each cap.
3) Pull out high-tension cords from spark plugs while gripping each cap.

CAUTION:
- **Removal of high-tension cords together with clamps will be recommended so as not to damage their inside wire (resistive conductor).**
- **For the same reason, pull out each connection by gripping cap portion.**

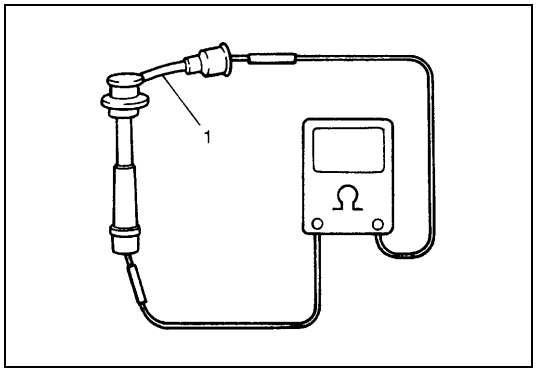

4) Measure resistance of high-tension cord (1) by using ohmmeter.

High-tension cord resistance
: 4 -10 kΩ/m (1.2 - 3.0 kΩ/ft)

5) If resistance exceeds specification, replace high-tension cord(s).

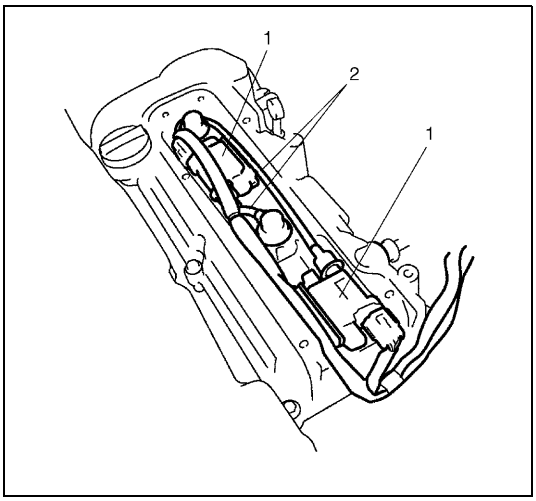

6) Install high-tension cords (2) to spark plugs and ignition coil assemblies (1) while gripping each cap.

CAUTION:
- **Never attempt to use metal conductor high-tension cords as replacing parts.**
- **Insert each cap portion fully when installing high-tension cords.**

SPARK PLUGS

1) Remove air intake pipe and cylinder head upper cover.
2) Pull out high-tension cords by gripping their caps and then remove ignition coil assemblies referring to IGNITION COIL ASSEMBLY in this section.
3) Remove spark plugs.
4) Inspect them for:
   - Electrode wear
   - Carbon deposits
   - Insulator damage

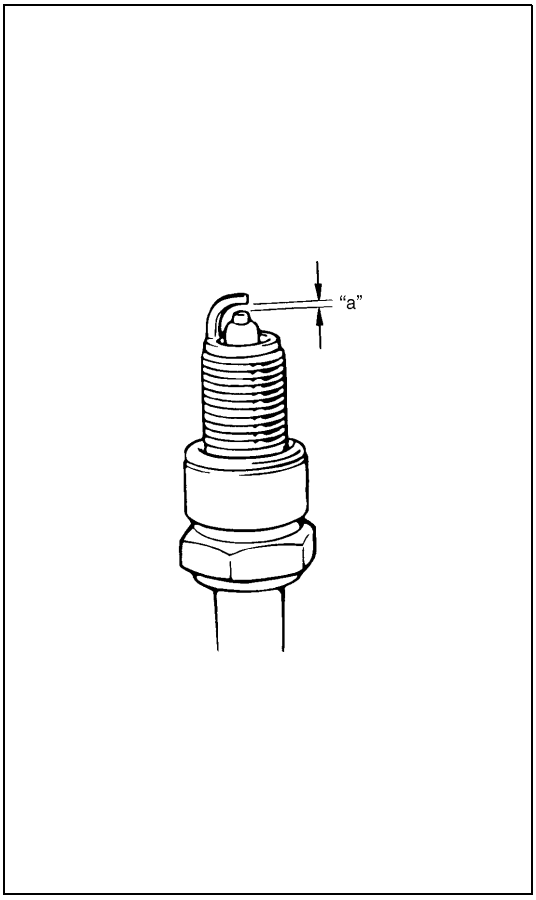

5) If any abnormality is found, adjust air gap, clean with spark plug cleaner or replace them with specified new plugs.
   For iridium/platinum spark plugs, replace them with new plugs.

Spark plug air gap
"a" : 1.0 - 1.1 mm (0.040 - 0.043 in.)

Spark plug type
NGK : BKR6E-11, IFR5E11
DENSO : K20PR-U11

NOTE:

NGK IFR5E11 is highly recommended for better engine starting performance under -25°C(-13°F).

CAUTION:
- **When servicing the iridium/platinum spark plugs (slender center electrode type plugs), do not touch the center electrode to avoid damage to it. The electrode is not strong enough against mechanical force as it is slender and its material is not mechanically tough**
- **Do not clean or adjust gap for the iridium/platinum spark plugs.**

6) Install spark plugs and torque them to specification.

Tightening torque
Spark plug : 25 N·m (2.5 kg-m, 18.0 lb-ft)

7) Install ignition coil assemblies referring to IGNITION COIL ASSEMBLY in this section.
8) Install high-tension cords securely by gripping their caps.
9) Install cylinder head upper cover and air intake pipe.

IGNITION COIL ASSEMBLY (INCLUDING IGNITOR)

Inspection

1) Disconnect negative cable at battery.
2) Remove air intake pipe and cylinder head upper cover.
3) Disconnect ignition coil coupler.

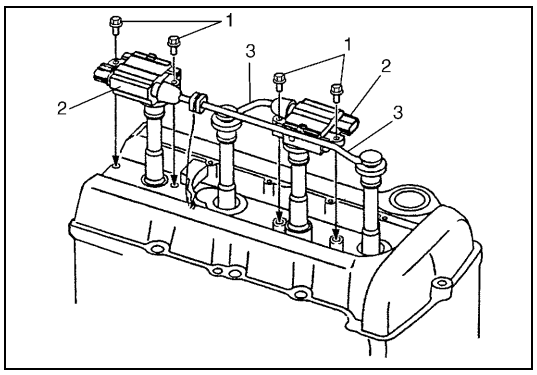

4) Disconnect high-tension cord (3) from ignition coil assembly (2).
5) Remove ignition coil bolts (1) and then pull out ignition coil assembly.

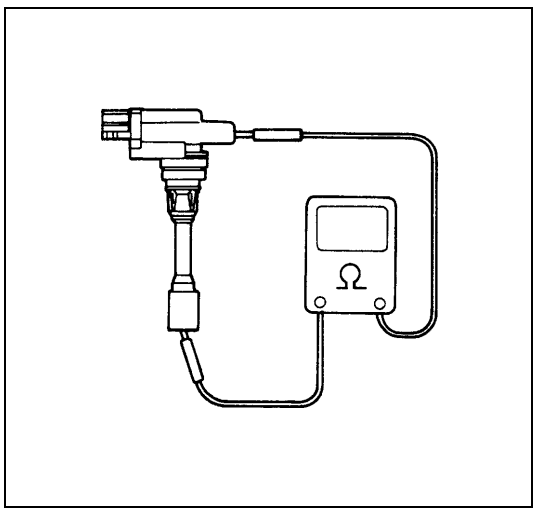

6) Measure secondary coil for resistance.
   If resistance is out of specification, replace ignition coil assembly.

Secondary coil resistance
: 7.6 - 10.2 kΩ at 20°C, 68°F

7) Install ignition coil assembly.
8) Tighten ignition coil bolts, and then connect ignition coil coupler.
9) Install high-tension cord to ignition coil assembly while gripping its cap.
10) Install cylinder head upper cover and air intake pipe.

CRANKSHAFT POSITION SENSOR (CKP SENSOR)

Refer to Section 6E1 for removal, inspection and installation.

IGNITION TIMING

NOTE:

- **Ignition timing is not adjustable. If ignition timing is out of specification, check system related parts.**
- **Before starting engine, place transmission gear shift lever in "Neutral" (shift selector lever to "P" range for A/T model), and set parking brake.**

INSPECTION

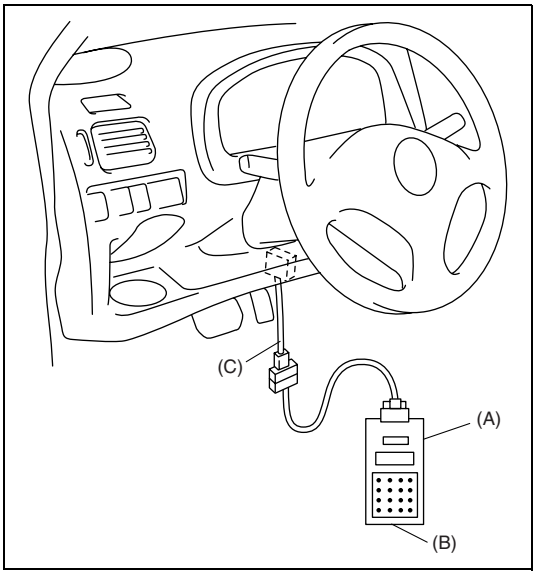

1) When using SUZUKI scan tool, connect SUZUKI scan tool to DLC with ignition switch OFF.

   Special tool
   (A) : 09931-76011 (SUZUKI scan tool)
   (B) : Mass storage cartridge
   (C) : 09931-76030 (16/14 pin DLC cable)

2) Start engine and warm it up to normal operating temperature.
3) Make sure that all of electrical loads except ignition are switched off.
4) Check to be sure that idle speed is within specification.
   (Refer to Section 6E1)

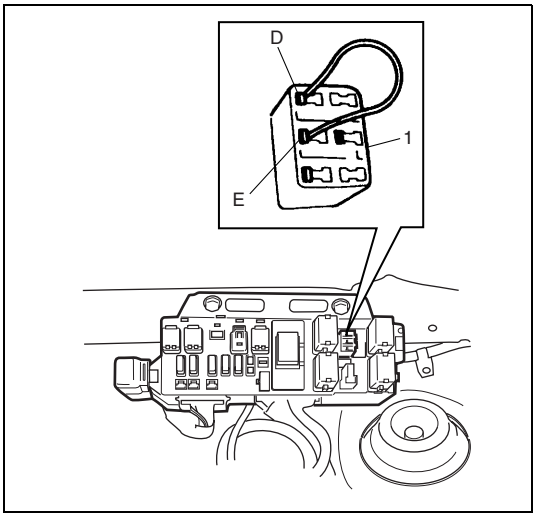

5) Fix ignition timing to initial one as follows.
   Select "MISC" mode on SUZUKI scan tool and fix ignition timing to initial one.
   If scan tool is not available (vehicle without immobilizer indicator lamp), connect D and E terminals of monitor connector (1) by using service wire so that ignition timing is fixed on initial one.

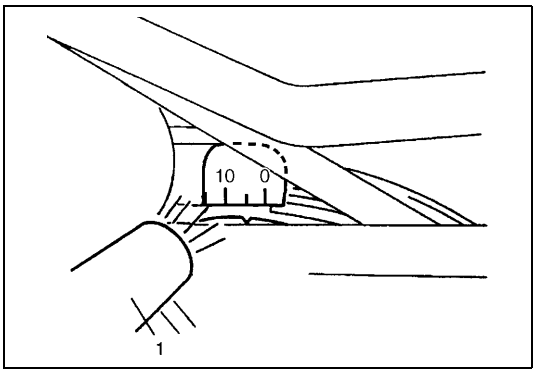

6) Using timing light (1), check that ignition timing is within specification.

   Initial ignition timing (test switch terminal grounded or fixed with SUZUKI scan tool)
   : 5 ± 3° BTDC at idle speed

   Ignition order
   : 1-3-4-2

7) If ignition timing is out of specification, check the followings:
   - CKP sensor
   - CKP sensor plate
   - TP sensor
   - Test switch signal circuit
   - VSS
   - Timing chain cover installation
8) After checking Initial Ignition Timing, release ignition timing fixation by using SUZUKI scan tool or disconnect service wire from monitor connector.
9) With engine idling (test switch terminal ungrounded, throttle opening at closed position and car stopped), check that ignition timing is about 7°–17° BTDC. (Constant variation within a few degrees from 7°–17° indicates no abnormality but proves operation of electronic timing control system.) Also, check that increasing engine speed advances ignition timing. If above check results are not satisfactory, check CKP sensor, test switch terminal circuit and ECM.

SPECIAL TOOL

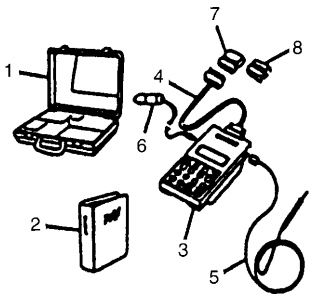	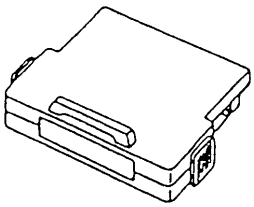	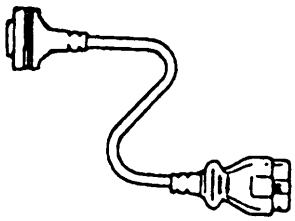
09931-76011 SUZUKI scan tool kit (See NOTE.)	Mass storage cartridge	09931-76030 16/14 pin DLC cable

NOTE:

This kit includes the following items.

1. Storage case, 2. Operator's manual, 3. Tech 1A, 4. DLC cable (14/26 pin, 09931-76040), 5. Test lead/probe, 6. Power source cable, 7. DLC cable adaptor, 8. Self-test adaptor

SECTION 6G

CRANKING SYSTEM

WARNING:

For vehicles equipped with Supplement Restraint (Air Bag) System:

- **Service on and around the air bag system components or wiring must be performed only by an authorized SUZUKI dealer. Refer to AIR BAG SYSTEM COMPONENTS and WIRING LOCATION VIEW under DIAGNOSIS in air bag system section in order to confirm whether you are performing service on or near the air bag system components or wiring. Please observe all WARNINGS and SERVICE PRECAUTIONS under PRECAUTIONS in air bag system section before performing service on or around the air bag system components or wiring. Failure to follow WARNINGS could result in unintentional activation of the system or could render the system inoperative. Either of these two conditions may result in severe injury.**
- **Technical service work must be started at least 90 seconds after the ignition switch is turned to the "LOCK" position and the negative cable is disconnected from the battery. Otherwise, the system may be activated by reserve energy in the Sensing and Diagnostic Module (SDM).**

NOTE:

Starting motor varies depending on specifications, etc. Therefore, be sure to check model and specification of the vehicle being serviced before replacing parts.

CONTENTS

GENERAL DESCRIPTION 6G-2
CRANKING CIRCUIT 6G-2
DIAGNOSIS 6G-2
DIAGNOSIS TABLE 6G-2
PERFORMANCE TEST 6G-4
PULL-IN TEST 6G-4
HOLD-IN TEST 6G-4
PLUNGER AND PINION RETURN TEST 6G-4
NO-LOAD PERFORMANCE TEST 6G-5
ON-VEHICLE SERVICE 6G-5
STARTING MOTOR 6G-5
DISMOUNTING 6G-5
REMOUNTING 6G-5
DISASSEMBLY AND REASSEMBLY 6G-6
SPECIFICATION 6G-8
1.0 kW TYPE 6G-8
1.2 kW TYPE 6G-8
REQUIRED SERVICE MATERIAL 6G-8

GENERAL DESCRIPTION

CRANKING CIRCUIT

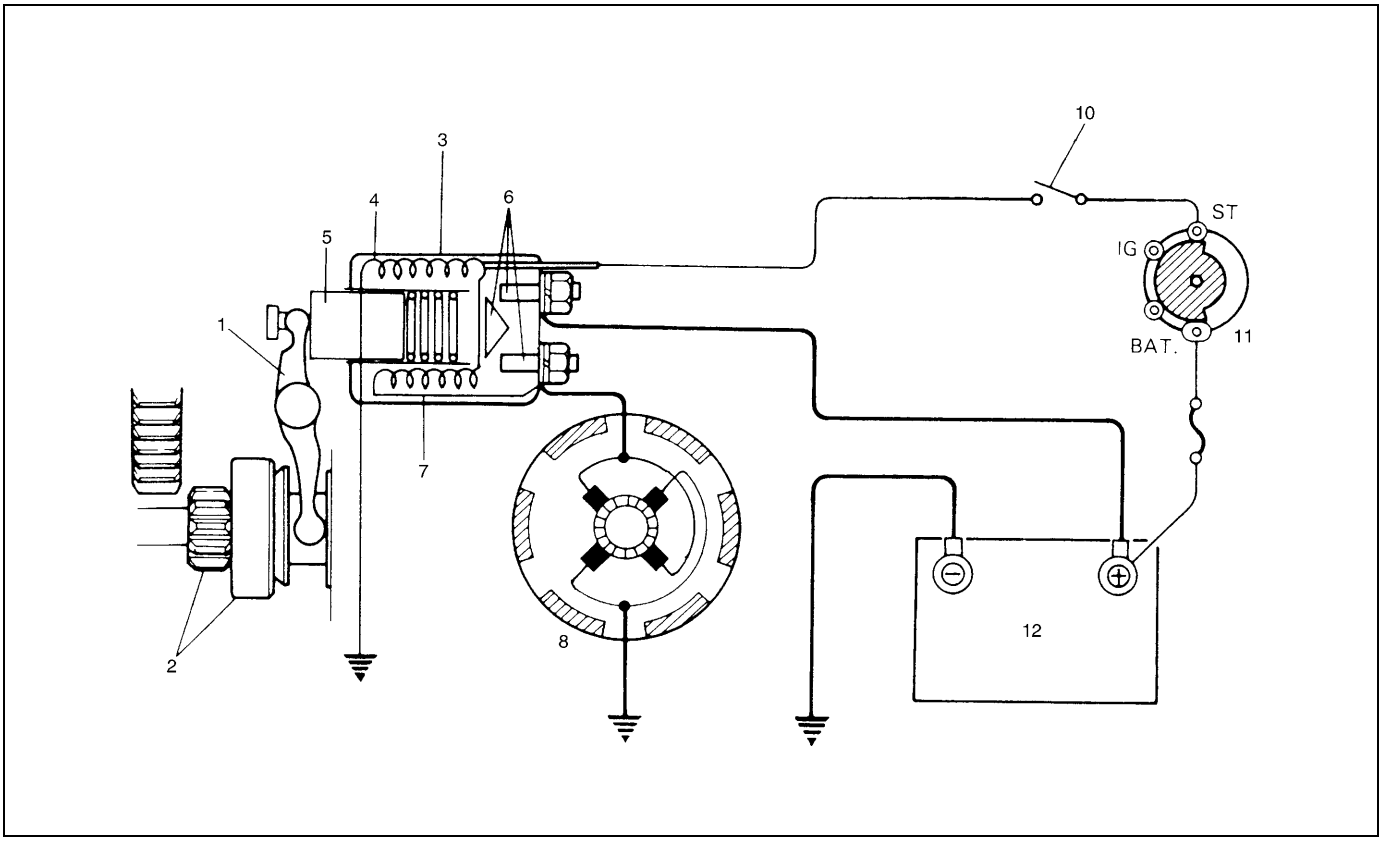

1. Pinion drive lever	5. Plunger	9. Blank
2. Pinion & Over-running clutch	6. Magnetic switch contacts	10. A/T: Transmission range switch (shift lever switch)
3. Magnetic switch	7. Pull-in coil	11. Ignition & Starter switch
4. Hold-in coil	8. Starting motor	12. Battery

DIAGNOSIS

DIAGNOSIS TABLE

Possible symptoms due to starting system trouble would be as follows:

- Starting motor does not run (or runs slowly)
- Starting motor runs but fails to crank engine
- Abnormal noise is heard

Proper diagnosis must be made to determine exactly where the cause of each trouble lies.....in battery, wiring harness, (including starting motor switch), starting motor or engine.
Do not remove motor just because starting motor does not run. Check following items and narrow down scope of possible causes.

1) Condition of trouble
2) Tightness of battery terminals (including ground cable connection on engine side) and starting motor terminals
3) Discharge of battery
4) Mounting of starting motor

Condition	Possible Cause	Correction
Motor not running (No operating sound of magnetic switch)	Shift lever switch is not in P or N, or not adjusted (A/T)	Shift in P or N, or adjust switch.
	Battery run down	Recharge battery.
	Battery voltage too low due to battery deterioration	Replace battery.
	Poor contact in battery terminal connection	Retighten or replace.
	Loose grounding cable connection	Retighten.
	Fuse set loose or blown off	Tighten or replace.
	Poor contacting action of ignition switch and magnetic switch	Replace.
	Lead wire coupler loose in place	Retighten.
	Open-circuit between ignition switch and magnetic switch	Repair.
	Open-circuit in pull-in coil	Replace magnetic switch.
	Brushes are seating poorly or worn down	Repair or replace.
	Poor sliding of plunger and/or pinion	Repair.
Motor not running (Operating sound of magnetic switch heard)	Battery run down	Recharge battery.
	Battery voltage too low due to battery deterioration	Replace battery.
	Loose battery cable connections	Retighten.
	Burnt main contact point, or poor contacting action of magnetic switch	Replace magnetic switch.
	Brushes are seating poorly or worn down	Repair or replace.
	Weakened brush spring	Replace.
	Burnt commutator	Replace armature.
	Layer short-circuit of armature	Replace.
	Crankshaft rotation obstructed	Repair.
Starting motor running but too slow (small torque) (If battery and wiring are satisfactory, inspect starting motor)	Insufficient contact of magnetic switch main contacts	Replace magnetic switch.
	Layer short-circuit of armature	Replace.
	Disconnected, burnt or worn commutator	Repair commutator or replace armature.
	Worn brushes	Replace brush.
	Weakened brush springs	Replace spring.
	Burnt or abnormally worn end bush	Replace bush.
Starting motor running, but not cranking engine	Worn pinion tip	Replace over-running clutch.
	Poor sliding of over-running clutch	Repair.
	Over-running clutch slipping	Replace over-running clutch.
	Worn teeth of pinion gear	Replace flywheel.
Noise	Abnormally worn bush	Replace bush.
	Worn pinion or worn teeth of pinion gear	Replace pinion or flywheel.
	Poor sliding of pinion (failure in return movement)	Repair or replace.
	Worn internal or planetary gear teeth	Replace.
	Lack of oil in each part	Lubricate.
Starting motor does not stop running	Fused contact points of magnetic switch	Replace magnetic switch.
	Short-circuit between turns of magnetic switch coil (layer short-circuit)	Replace magnetic switch.
	Failure of returning action in ignition switch	Replace.

PERFORMANCE TEST

CAUTION:

Each test must be performed within 3 - 5 seconds to avoid coil from burning.

PULL-IN TEST

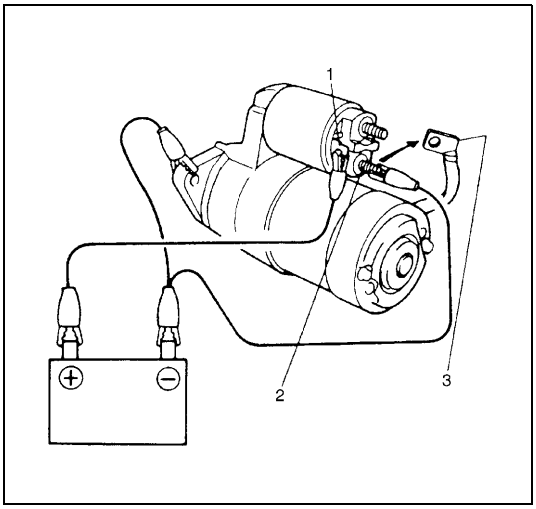

Connect battery to magnetic switch as shown.
Check that plunger and pinion move outward.
If plunger and pinion don't move, replace magnetic switch.

NOTE:

Before testing, disconnect lead wire from terminal M.

1.	Terminal "S"
2.	Terminal "M"
3.	Lead wire (switch to motor)

HOLD-IN TEST

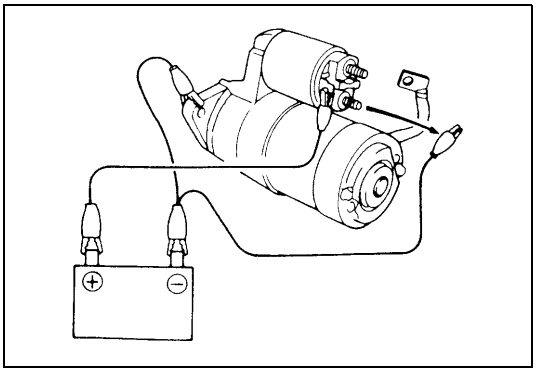

While connected as above with plunger out, disconnect negative lead from terminal "M".
Check that plunger and pinion remain out.
If plunger and pinion return inward, replace magnetic switch.

PLUNGER AND PINION RETURN TEST

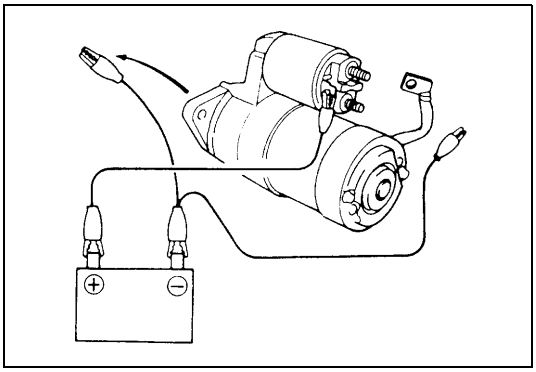

Disconnect negative lead from starting motor body.
Check that plunger and pinion return inward.
If plunger and pinion don't return, replace magnetic switch.

NO-LOAD PERFORMANCE TEST

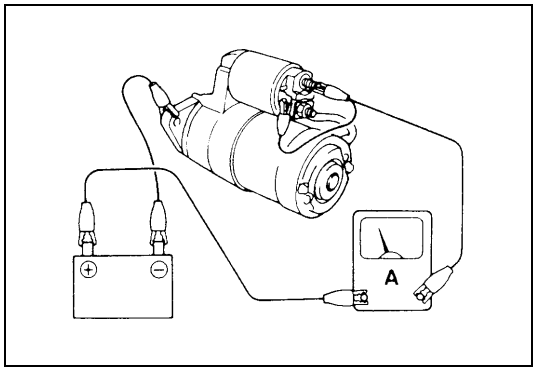

Connect battery and ammeter to starter as shown.
Check that starter rotates smoothly and steadily with pinion moving out. Check that ammeter indicates specified current.

Specified current (No-load performance test)
: 90 A MAX. at 11 V

ON-VEHICLE SERVICE

STARTING MOTOR

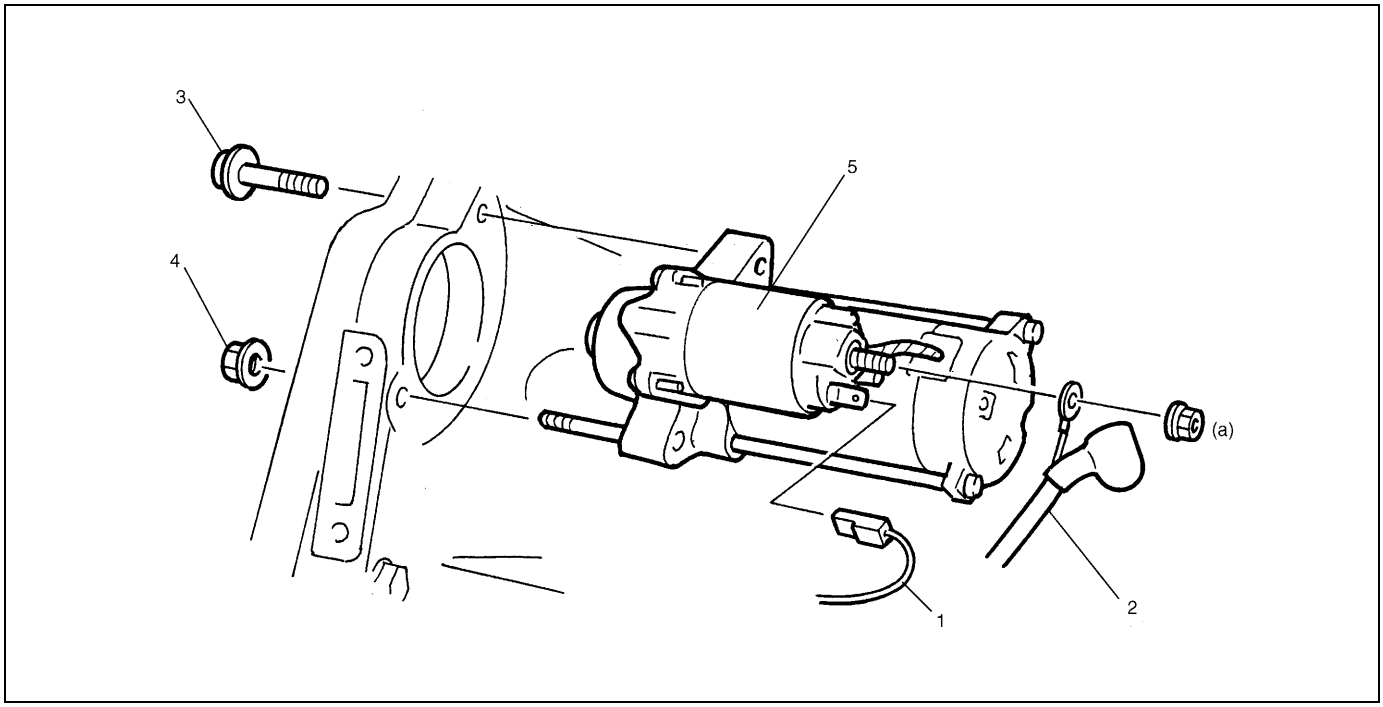

DISMOUNTING

1) Disconnect negative (–) battery lead at battery.
2) Disconnect magnetic switch lead wire (1) and battery cable (2) from starting motor terminals.
3) Remove starting motor mount bolt (3) and nut (4).
4) Remove starting motor (5).

REMOUNTING

Reverse the dismounting procedure.

Tightening torque
Starting motor battery cable nut (a) : 10 N·m (1.0 kg-m, 7.5 lb-ft)

DISASSEMBLY AND REASSEMBLY

1.0 kW TYPE

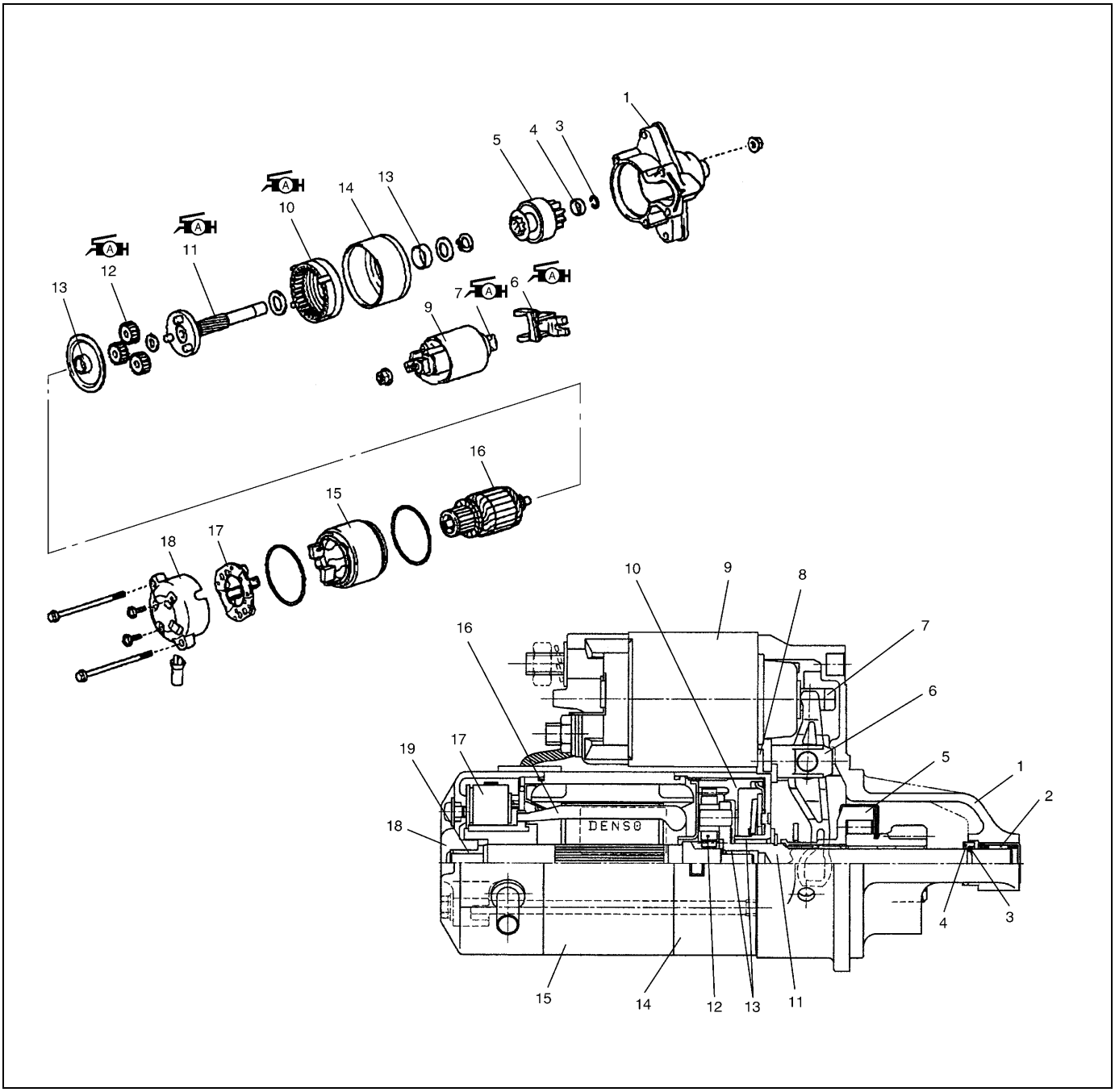

1. Front housing	6. Lever	11. Planetary carrier shaft	16. Armature
2. Needle bearing	7. Plunger	12. Planetary gear	17. Brush holder
3. Snap ring	8. Seal rubber	13. Oilless bearing	18. Rear bracket
4. Pinion stop ring	9. Magnetic switch	14. Center bearing with shock absorber	19. Rear bush
5. Over-running clutch	10. Internal gear	15. Yoke	

1.2 kW TYPE

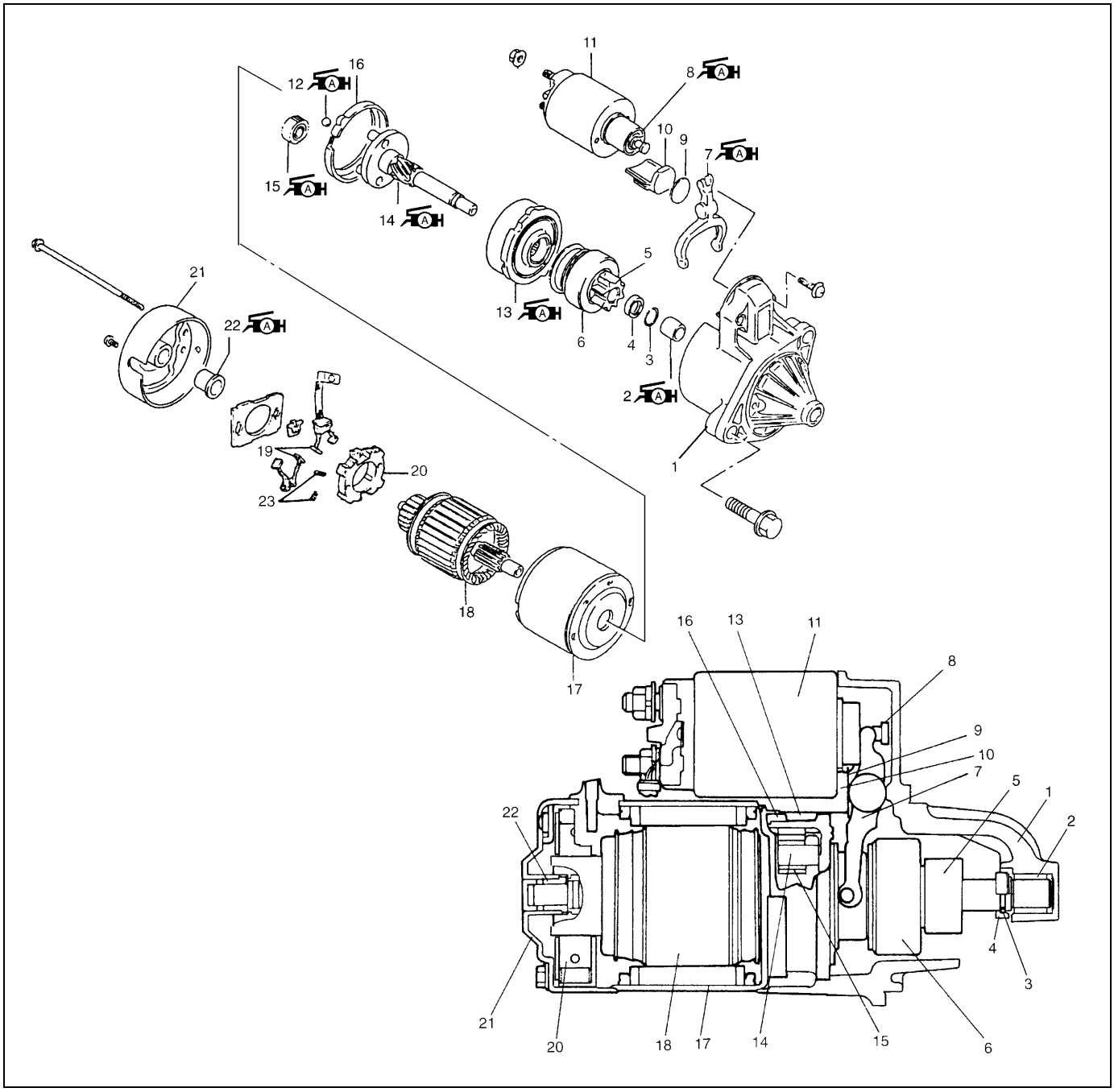

1. Front housing	7. Lever	13. Internal gear	19. Brush
2. Bush	8. Plunger	14. Planetary carrier shaft	20. Brush holder
3. Snap ring	9. Plate	15. Planetary gear	21. Rear bracket
4. Pinion stop ring	10. Seal rubber	16. Packing	22. Rear bush
5. Pinion gear	11. Magnetic switch	17. Yoke	23. Brush spring
6. Over-running clutch	12. Ball	18. Armature	

SPECIFICATION

1.0 kW TYPE

Voltage			12 volts	
Output			1.0 kW	
Rating			30 seconds	
Direction of rotation			Clockwise as viewed from pinion side	
Brush length			Standard: 14.0 mm (0.55 in.)	Limit: 9.0 mm (0.35 in.)
Number of pinion teeth			8	
Performance		Condition	Guarantee	
Around at 20°C (68°F)	No load characteristic	11.5 V	90 A maximum 3,000 rpm minimum	
	Load characteristic	8.7 V 230 A	6.9 N·m (0.69 kg-m, 5.0 lb-ft) minimum 1130 rpm minimum	
	Locked rotor current	2.5 V	325 A maximum 8.2 N·m (0.82 kg-m, 6.0 lb-ft) minimum	
	Magnetic switch operating voltage		8 volts maximum	

1.2 kW TYPE

Voltage			12 volts	
Output			1.2 kW	
Rating			30 seconds	
Direction of rotation			Clockwise as viewed from pinion side	
Brush length			Standard: 12.3 mm (0.48 in.)	Limit: 7.0 mm (0.27 in.)
Number of pinion teeth			8	
Performance		Condition	Guarantee	
Around at 20°C (68°F)	No load characteristic	11.0 V	90 A maximum 2,500 rpm minimum	
	Load characteristic	7.5 V 300 A	10.5 N·m (1.05 kg-m, 7.59 lb-ft) minimum 880 rpm minimum	
	Locked characteristic	4.0 V	760 A maximum 19.5 N·m (1.95 kg-m, 14.1 lb-ft) minimum	
	Magnetic switch operating voltage		8 volts maximum	

REQUIRED SERVICE MATERIAL

Material	Recommended SUZUKI product (Part Number)	Use
Lithium grease	SUZUKI SUPER GREASE A (99000-25010)	• Front and rear bush (for 1.2 kW type only) • Plunger • Pinion drive lever • Internal gear • Planetary carrier shaft • Planetary gear • Ball

SECTION 6H

CHARGING SYSTEM

WARNING:

For vehicles equipped with Supplemental Restraint (Air Bag) System:

- **Service on and around the air bag system components or wiring must be performed only by an authorized SUZUKI dealer. Refer to "Air Bag System Components and Wiring Location View" under "General Description" in air bag system section in order to confirm whether you are performing service on or near the air bag system components or wiring. Please observe all WARNINGS and "Service Precautions" under "On-Vehicle Service" in air bag system section before performing service on or around the air bag system components or wiring. Failure to follow WARNINGS could result in unintentional activation of the system or could render the system inoperative. Either of these two conditions may result in severe injury.**
- **Technical service work must be started at least 90 seconds after the ignition switch is turned to the "LOCK" position and the negative cable is disconnected from the battery. Otherwise, the system may be activated by reserve energy in the Sensing and Diagnostic Module (SDM).**

CONTENTS

GENERAL DESCRIPTION 6H-2
- BATTERY 6H-2
  - CARRIER AND HOLD-DOWN 6H-2
  - ELECTROLYTE FREEZING 6H-2
  - SULFATION 6H-2
  - BUILT-IN INDICATOR (IF EQUIPPED) ... 6H-2
  - CARE OF BATTERY 6H-3
- GENERATOR 6H-4

DIAGNOSIS 6H-5
- BATTERY 6H-5
  - VISUAL INSPECTION 6H-5
  - HYDROMETER TEST 6H-5
- GENERATOR 6H-6
  - CHARGING INDICATOR LAMP OPERATION 6H-6
  - UNDERCHARGED BATTERY 6H-7
  - OVERCHARGED BATTERY 6H-8

ON-VEHICLE SERVICE 6H-9
- BATTERY 6H-9
  - JUMP STARTING IN CASE OF EMERGENCY 6H-9
  - DISMOUNTING 6H-10
  - HANDLING 6H-10
  - REMOUNTING 6H-10
- GENERATOR 6H-10
  - GENERATOR BELT 6H-10
  - DISMOUNTING AND REMOUNTING ... 6H-11
  - DISASSEMBLY AND REASSEMBLY 6H-11
  - INSPECTION 6H-12

SPECIFICATION 6H-14
- BATTERY 6H-14
- GENERATOR 6H-14

TIGHTENING TORQUE SPECIFICATION 6H-14

GENERAL DESCRIPTION

BATTERY

The battery has three major functions in the electrical system.

- It is a source of electrical energy for cranking the engine.
- It acts as a voltage stabilizer for the electrical system.
- It can, for a limited time, provide energy when the electrical load exceeds the output of the generator.

CARRIER AND HOLD-DOWN

The battery carrier should be in good condition so that it will support the battery securely and keep it level.
Before installing the battery, the battery carrier and hold-down clamp should be clean and free from corrosion and make certain there are no parts in carrier.
To prevent the battery from shaking in its carrier, the hold-down bolts should be tight enough but not over-tightened.

ELECTROLYTE FREEZING

The freezing point of electrolyte depends on its specific gravity. Since freezing may ruin a battery, it should be protected against freezing by keeping it in a fully charged condition. If a battery is frozen accidentally, it should not be charged until it is warmed.

SULFATION

If the battery is allowed to stand for a long period in discharged condition, the lead sulfate becomes converted into a hard, crystalline substance, which will not easily turn back to the active material again during the subsequent recharging. “Sulfation” means the result as well as the process of that reaction. Such a battery can be revived by very slow charging and may be restored to usable condition but its capacity is lower than before.

BUILT-IN INDICATOR (IF EQUIPPED)

The battery has a built-in temperature compensated indicator in the top of the battery. This indicator is to be used with the following diagnostic procedure. When checking the indicator, make sure that the battery has a clean top. A light may be needed in some poorly-lit areas.

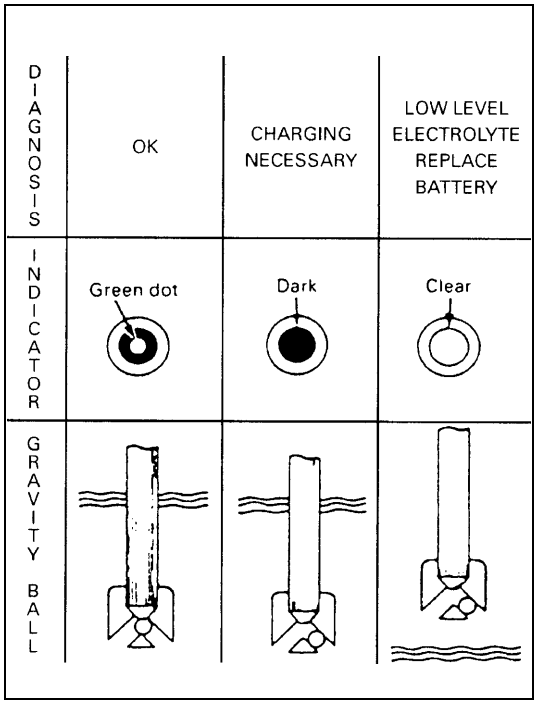

Three types of indication available under normal operation are as follows.

- Green Dot
  Battery is sufficiently charged for testing.
- Dark
  Battery must be charged before testing.
  If there is a cranking complaint, battery should be tested as described in Diagnosis section. Charging and electrical systems should also be checked at this time.
- Clear or Light Yellow
  This means that fluid level is below the bottom of hydrometer. Its possible cause is excessive or prolonged charging, a broken case, excessive tipping or normal battery deterioration. When the battery is found in such condition, it is possible that high charging voltage is caused by the faulty charging system and therefore, charging and electrical systems need to be checked. If there is a trouble in cranking and its cause lies in the battery, it should be replaced.

CARE OF BATTERY

WARNING:

- **Never expose battery to open flame or electric spark because of battery generate gas which is flammable and explosive.**
- **Do not allow battery fluid to contact eyes, skin, fabrics, or painted surfaces as fluid is a corrosive acid. Flush any contacted area with water immediately and thoroughly.**
- **Batteries should always be kept out of reach of children.**

1) The battery is a very reliable component, but needs periodical attentions.
   - Keep the battery carrier clean
   - Prevent rust formation on the terminal posts
   - Keep the electrolyte up to the upper level uniformly in all cells.
   - When keeping battery on vehicle over a long period of time, follow instructions given below.
     – Weekly, start the engine and run it until it reaches normal operating temperature with engine speed of 2000 to 3000 rpm. Make sure all electric switches are off before storing the vehicle.
     – Recharge the battery twice a month to prevent it from discharging excessively. This is especially important when ambient temperature is low.
     The battery discharges even when it is not used, while vehicles are being stored. Battery electrolyte can freeze and battery case can crack at cold ambient condition if battery is not properly charged.
2) Keep the battery cable connections clean.
   The cable connections, particularly at the positive (+) terminal post, tend to become corroded. The product of corrosion, or rust, on the mating faces of conductors resists the flow of current.
   Clean the terminals and fittings periodically to ensure good metal-to-metal contact, and grease the connections after each cleaning to protect them against rusting.
3) Be always in the know as to the state of charge of the battery. The simplest way to tell the state of charge is to carry out a hydrometer test. The hydrometer is an instrument for measuring the specific gravity (S.G.) of the battery electrolyte. The S.G. of the electrolyte is indicative of the state of charge. Refer to “DIAGNOSIS” of BATTERY in this section.

GENERATOR

The generator is a small and high performance type with an IC regulator incorporated.
The internal components are connected electrically as shown below figure.

The generator features are as follows:

- Solid state regulator is mounted inside the generator.
- All regulator components are enclosed into a solid mold.
- This unit along with the brush holder assembly is attached to the rear housing.
- The IC regulator uses integrated circuits and controls the voltage produced by the generator, and the voltage setting cannot be adjusted.
- The generator rotor bearings contain enough grease to eliminate the need for periodic lubrication. Two brushes carry current through the two slip rings to the field coil mounted on the rotor, and under normal conditions will provide long period of attention-free service.
- The stator windings are assembled on the inside of a laminated core that forms part of the generator frame.
- A condenser mounted in the rear housing suppresses radio noise.

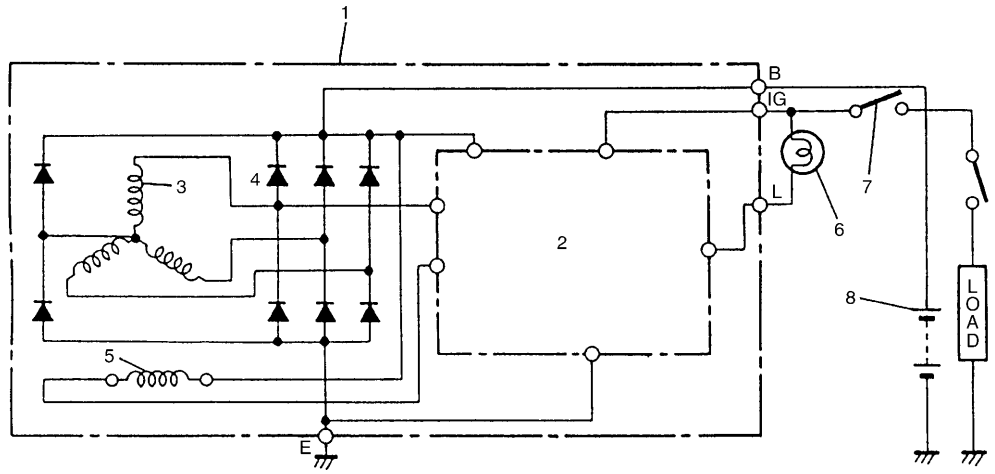

1. Generator with regulator ass'y	3. Stator coil	5. Field coil (rotor coil)	7. Main switch
2. I.C. regulator	4. Diode	6. Charge indicator light	8. Battery

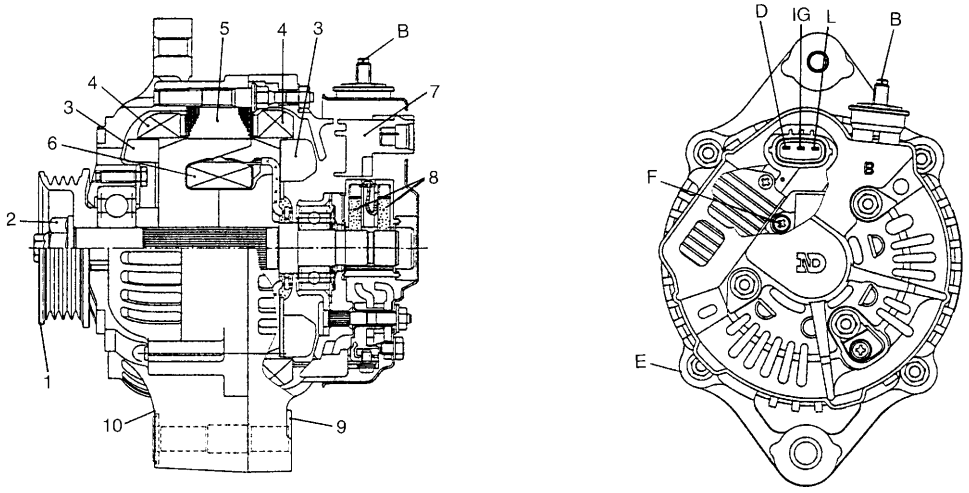

1. Pulley	5. Stator core	9. Rear end frame	E: Ground
2. Pulley nut	6. Field coil	10. Drive end frame	F: Field coil terminal
3. Rotor fan	7. Regulator	B: Generator output (Battery terminal)	IG: Ignition terminal
4. Stator coil	8. Brush	D: Dummy terminal	L: Lamp terminal

DIAGNOSIS

BATTERY

VISUAL INSPECTION

Check for obvious damage, such as cracked or broken case or cover, that could permit loss of electrolyte. If obvious damage is noted, replace battery. Determine cause of damage and correct as needed.

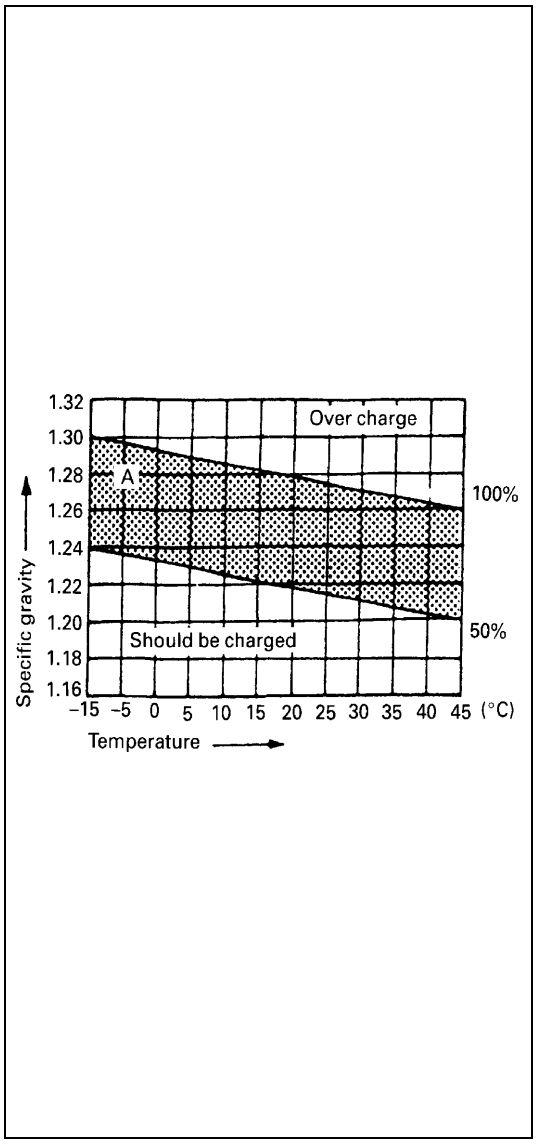

HYDROMETER TEST

The direct method of checking the battery for state of charge is to carry out a high rate discharge test, which involves a special precise voltmeter and an expensive instrument used in the service shops, but not recommendable to the user of the vehicle.

At 20 °C of battery temperature (electrolyte temperature):

- The battery is in FULLY CHARGED STATE if the electrolyte S.G. is 1.280.
- The battery is in HALF CHARGED STATE if the S.G. is 1.220.
- The battery is in NEARLY DISCHARGED STATE if the S.G. is 1.150 and is in danger of freezing.

As the S.G. varies with the temperature, if battery temperature is not at 20°C (68°F), you have to correct your S.G. reading (taken with your hydrometer) to the value at 20°C (68°F) and apply the corrected S.G. value to the three-point guide stated value.

For the manner of correction, refer to the graph showing the relation between S.G. value and temperature at the left.

How to use the temperature-corrected state-of-charge graph

Suppose your S.G. reading is 1.28 and the battery temperature is –5°C (23°F). Locate the intersection of the –5°C line and the 1.28 S.G. line.

The intersection is within the “A” zone (shaded area in the graph) and that means CHARGED STATE.

To know how much the battery is charged, draw a line parallel to the zone demarcation line and extend it to the right till it meets with the percentage scale. In the present example, the line meets at about 85% point on the percentage scale. Therefore, the battery is charged up to the 85% level.

GENERATOR

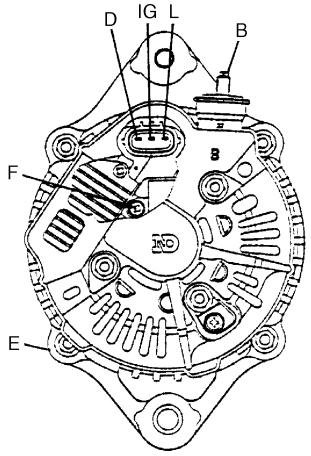

CAUTION:

- **Do not mistake polarities of IG terminal and L terminal.**
- **Do not create short circuit between IG and L terminals. Always connect these terminals through a lamp.**
- **Do not connect any load between L and E.**
- **When connecting charger or booster battery to vehicle battery, refer to this section describing battery charging.**

Trouble in charging system will show up as one or more of the following conditions:

1) Faulty indicator lamp operation.
2) An undercharged battery as evidenced by slow cranking or indicator dark.
3) An overcharged battery as evidenced by excessive spewing of electrolyte from vents.

Noise from generator may be caused by loose drive pulley, loose mounting bolts, worn or dirty bearings, defective diode, or defective stator.

B: Generator output (Battery terminal)
D: Dummy terminal
E: Ground
F: Field coil terminal
IG: Ignition terminal
L: Lamp terminal

CHARGING INDICATOR LAMP OPERATION

Condition	Possible Cause	Correction
Charge light does not light with ignition ON and engine off	Fuse blown	Check fuse.
	Light burned out	Replace light.
	Wiring connection loose	Tighten loose connection.
	IC regulator or field coil faulty	Check generator.
	Poor contact between brush and slip ring	Repair or replace.
Charge light does not go out with engine running (battery requires frequent recharging)	Drive belt loose or worn	Adjust or replace drive belt.
	IC regulator or generator faulty	Check charging system.
	Wiring faulty	Repair wiring.

UNDERCHARGED BATTERY

This condition, as evidenced by slow cranking or indicator clear with red dot can be caused by one or more of the following conditions even though indicator lamp may be operating normal.
Following procedure also applies to cars with voltmeter and ammeter.

- Make sure that undercharged condition has not been caused by accessories left on for extended period of time.
- Check drive belt for proper tension.
- If battery defect is suspected, refer to BATTERY section.
- Inspect wiring for defects. Check all connections for tightness and cleanliness, battery cable connections at battery, starting motor and ignition ground cable.

NO-LOAD CHECK

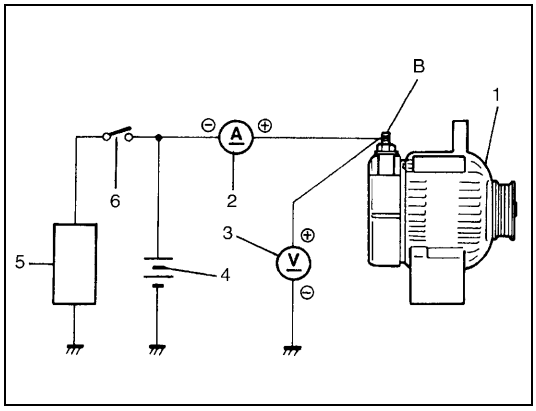

1) Connect voltmeter and ammeter as shown in left figure.

NOTE:

Use fully charged battery.

1.	Generator
2.	Ammeter (between generator (B) terminal and battery (+) terminal)
3.	Voltmeter (between generator (B) terminal and ground)
4.	Battery
5.	Load
6.	Switch

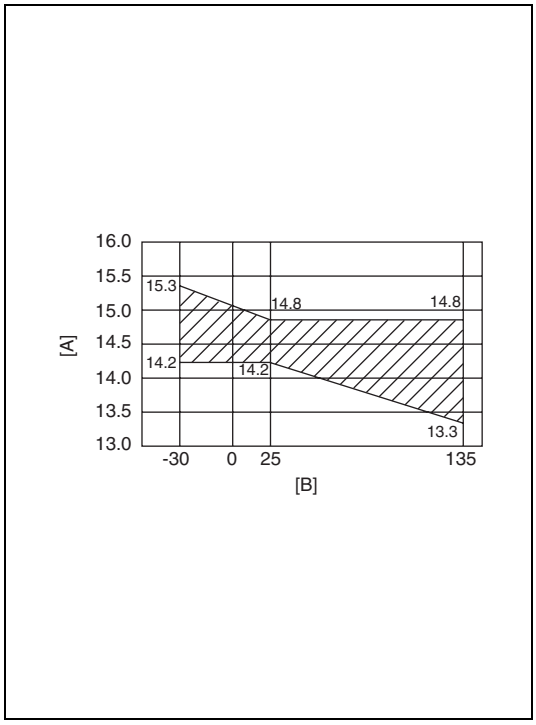

2) Run engine from idling up to 2,000 rpm with all accessories turned off and read meters.
   If voltage is higher than standard value, check ground of brushes.
   If brushes are not grounded, replace IC regulator.
   If voltage is lower than standard value, proceed to following check.

Specification for undercharged battery (No-load check)
Current: 10 A
Voltage: 14.2 – 14.8 V (at 25°C, 77°F)

NOTE:

Consideration should be taken that voltage will differ somewhat with regulator case temperature as shown in left figure.

A:	Regulated voltage (V)
B:	Heatsink temperature (°C)

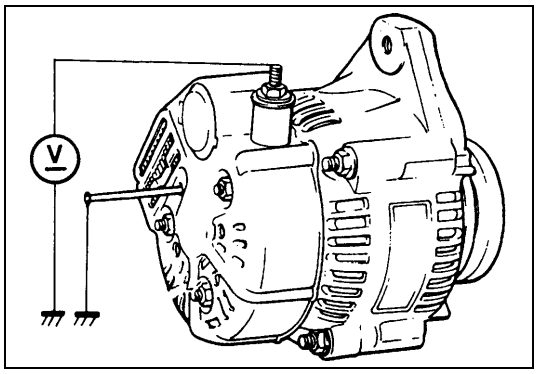

3) Ground F terminal and start engine, then measure voltage at B terminal as shown in left figure.
   - Voltage is higher than standard value
     It is considered that generator itself is good but IC regulator has been damaged, replace IC regulator.
   - Voltage is lower than standard value
     Generator itself has problem, check the generator.

LOAD CHECK

1) Run engine at 2,000 rpm and turn on head light and heater motor.
2) Measure current and if it is less than 20 A repair or replace generator.

OVERCHARGED BATTERY

1) To determine battery condition, refer to Battery section.
2) If obvious overcharge condition exists as evidenced by excessive spewing of electrolyte, measure generator B terminal voltage at engine 2000 rpm.
3) If measured voltage is higher than upper limit value, disassemble generator.
4) Check ground of brushes. If brushes are not grounded, replace IC regulator. Then check field coil for grounds and shorts.

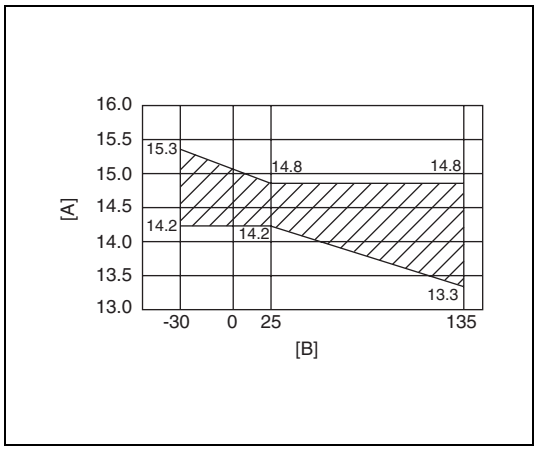

A:	Regulated voltage (V)
B:	Heatsink temperature (°C)

ON-VEHICLE SERVICE

BATTERY

JUMP STARTING IN CASE OF EMERGENCY

WITH AUXILIARY (BOOSTER) BATTERY

CAUTION:

If vehicle is manual transmission model and has a catalytic converter, do not push or tow it to start. Damage to its emission system and/or to other parts may result.

Both booster and discharged battery should be treated carefully when using jumper cables. Follow procedure outlined below, being careful not to cause sparks.

WARNING:

- **Departure from these conditions or procedure described below could result in:**
  - **Serious personal injury (particularly to eyes) or property damage from such causes as battery explosion, battery acid, or electrical burns.**
  - **Damage to electronic components of either vehicle.**
- **Remove rings, watches, and other jewelry. Wear approved eye protection.**
- **Be careful so that metal tools or jumper cables do not contact positive battery terminal (or metal in contact with it) and any other metal on vehicle, because a short circuit could occur.**

WARNING:

Do not connect negative cable directly to negative terminal of dead battery.

1) Set parking brake and place automatic transmission in PARK (NEUTRAL on manual transmission). Turn off ignition, turn off lights and all other electrical loads.
2) Check electrolyte level. If it is below low level line, add distilled water.
3) Attach end of one jumper cable to positive terminal of booster battery and the other end of the same cable to positive terminal of discharged battery. (Use 12-volt battery only to jump start engine).
4) Attach one end of the remaining negative cable to negative terminal of booster battery, and the other end to a solid engine ground (such as exhaust manifold) at least 45 cm (18 in.) away from battery of vehicle being started.
5) Start engine of vehicle with booster battery and turn off electrical accessories. Then Start engine of the vehicle with discharged battery.
6) Disconnect jumper cables in the exact reverse order.

WITH CHARGING EQUIPMENT

CAUTION:

When jump starting engine with charging equipment, be sure equipment used is 12-volt and negative ground. Do not use 24-volt charging equipment. Using such equipment can cause serious damage to electrical system or electronic parts.

DISMOUNTING

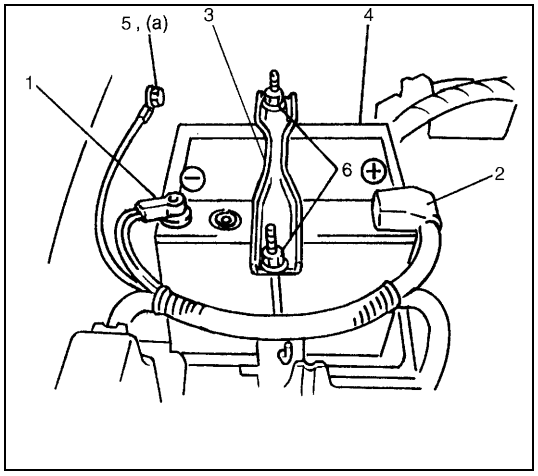

1) Disconnect negative cable (1).
2) Disconnect positive cable (2).
3) Remove retainer (3).
4) Remove battery (4).

5.	Body ground bolt
6.	Nut

HANDLING

When handling battery, following safety precautions should be followed:

- Hydrogen gas is produced by battery. A flame or spark near battery may cause the gas to ignite.
- Battery fluid is highly acidic. Avoid spilling on clothing or other fabric. Any spilled electrolyte should be flushed with large quantity of water and cleaned immediately.

REMOUNTING

1) Reverse removal procedure.
2) Torque battery cables to specification.

NOTE:

Check to be sure that ground cable has enough clearance to hood panel by terminal.

Tightening torque
Body ground bolt (a): 8.0 N·m (0.8 kg-m, 6.0 lb-ft)

GENERATOR

GENERATOR BELT

Refer to “WATER PUMP BELT” in Section 6B “ENGINE COOLING”.

DISMOUNTING AND REMOUNTING

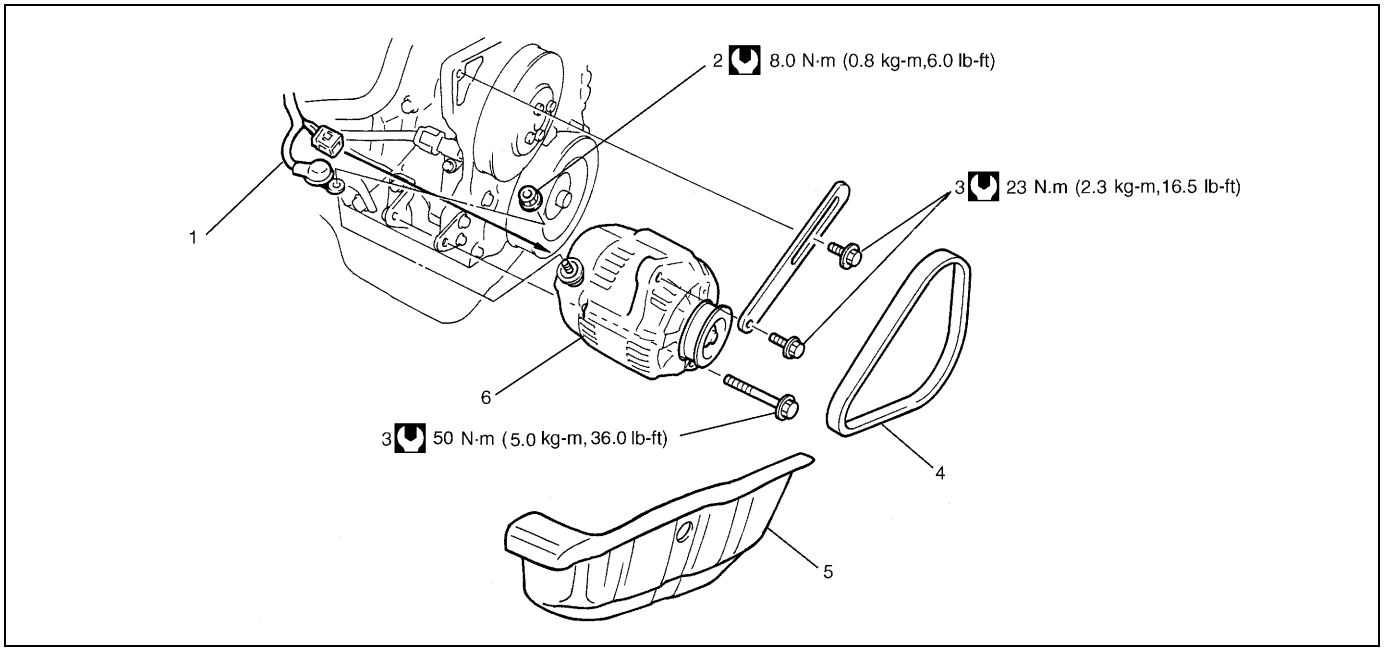

1. "B" terminal wire	3. Generator bolt	5. Splash cover (Right)	Tightening torque
2. "B" terminal nut	4. Generator belt	6. Generator	

DISASSEMBLY AND REASSEMBLY

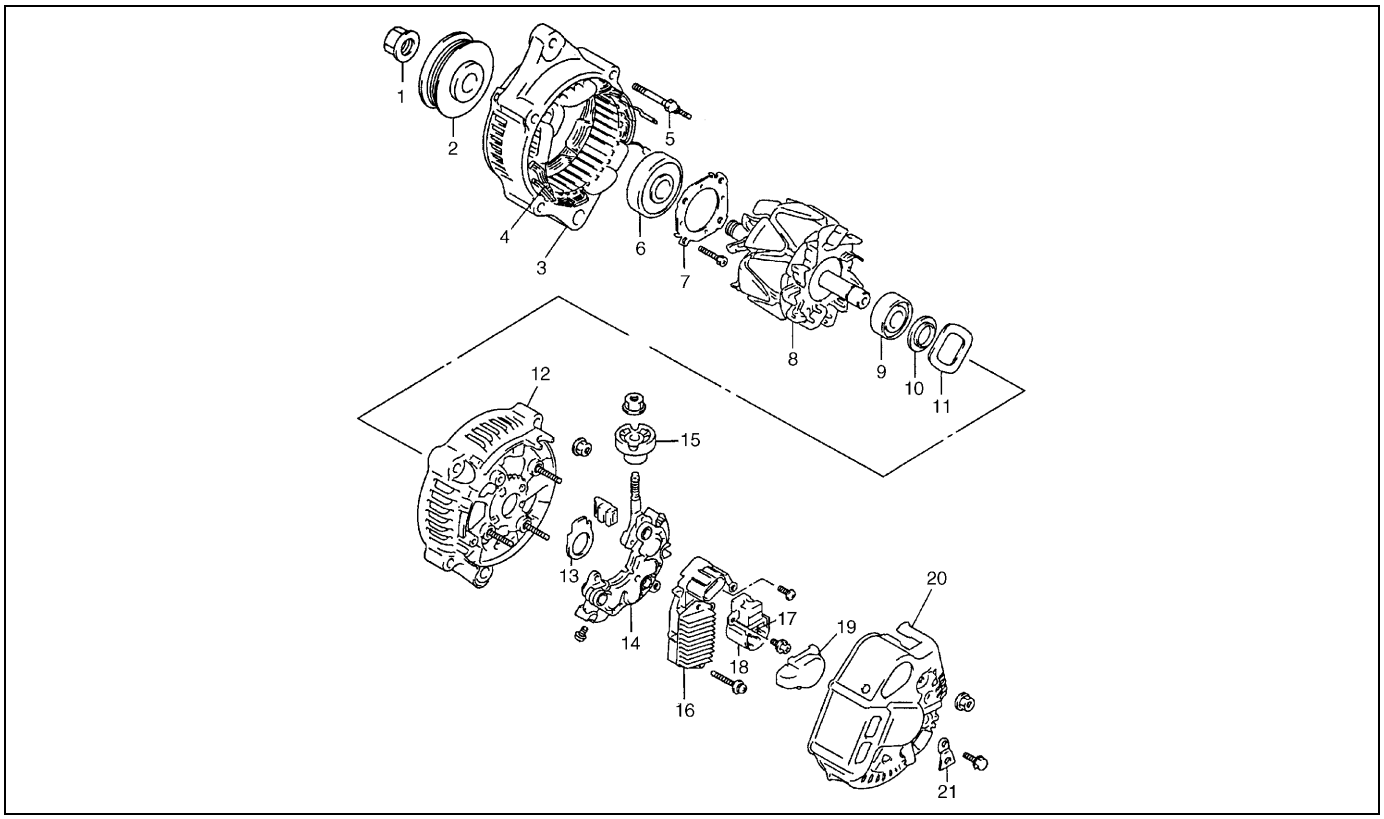

1. Pulley nut	7. Bearing retainer	13. Seal plate	19. Brush holder cover
2. Pulley	8. Rotor	14. Rectifier	20. Rear end cover
3. Drive end frame	9. End housing bearing	15. Insulator	21. Terminal plate
4. Stator	10. Bearing cover	16. Regulator	
5. Stud bolt	11. Wave washer	17. Brush	
6. Drive end bearing	12. Rear end frame	18. Brush holder	

INSPECTION

ROTOR

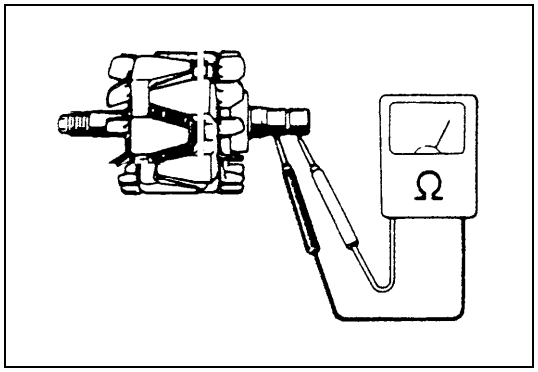

1) Using ohmmeter, check for continuity between slip rings of rotor. If there is no continuity, replace rotor.

Standard resistance between slip rings of rotor
: 2.7 – 3.1 Ω at 20°C (68°F)

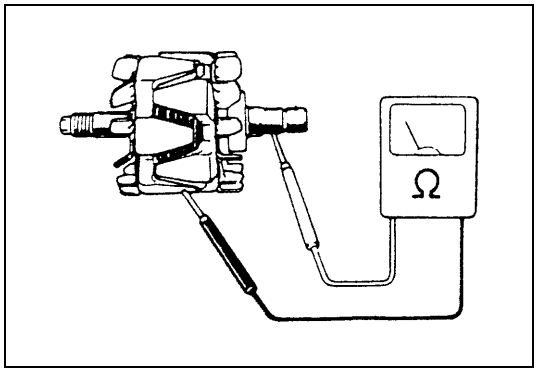

2) Using ohmmeter, check that there is no continuity between slip ring and rotor. If there is continuity, replace rotor.

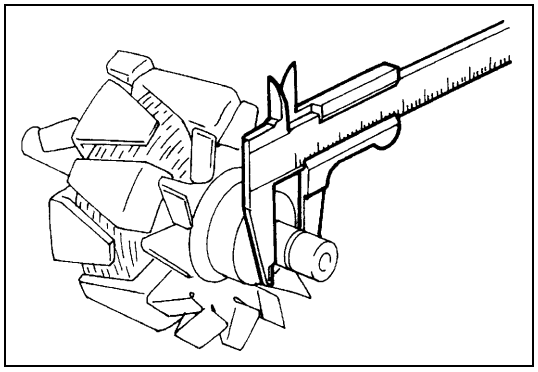

3) Check slip rings for roughness or scoring. If rough or scored, replace rotor.
Using a vernier caliper, measure the slip ring diameter.
If the diameter is less than minimum, replace the rotor.

Slip ring diameter
Standard: 14.2 – 14.4 mm (0.557 – 0.567 in.)
Limit: 12.8 mm (0.504 in.)

STATOR

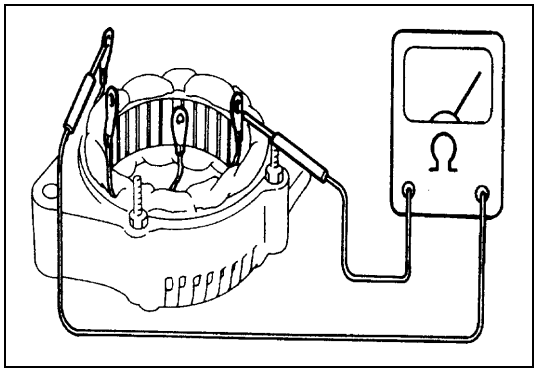

1) Using an ohmmeter, check all leads for continuity. If there is no continuity, replace stator.

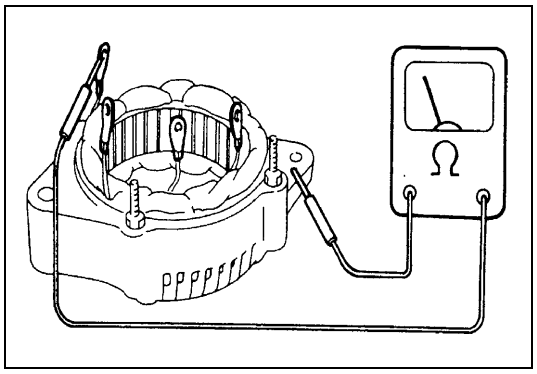

2) Using ohmmeter, check that there is no continuity between coil leads and stator core. If there is continuity, replace stator.

BRUSH AND BRUSH HOLDER

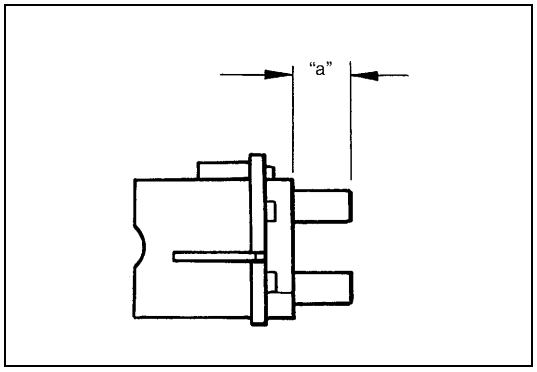

Check each brush for wear by measuring its length as shown. If brush is found worn down to service limit, replace brush.

Exposed brush length "a"
Standard: 10.5 mm (0.41 in.)
Limit: 1.5 mm (0.06 in.)

RECTIFIER

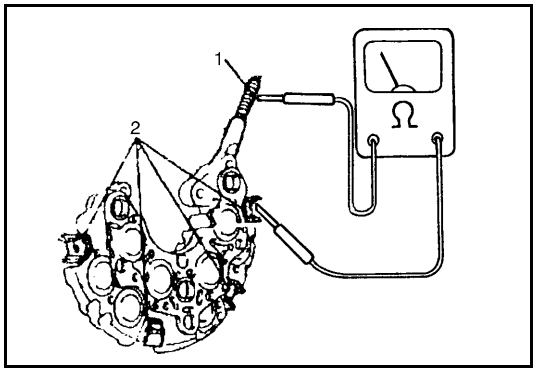

1) Using an ohmmeter, connect one tester probe to the "B" terminal (1) and the other to each rectifier terminal (2).
2) Reverse the polarity of the tester probes and repeat step 1).
3) Check that one shows continuity and the other shows no continuity.
   If there is continuity, replace the rectifier.

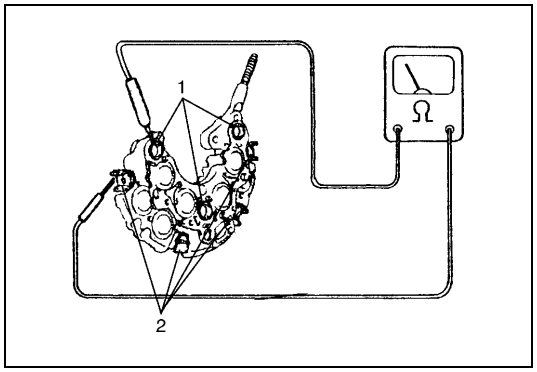

4) Using an ohmmeter, connect one tester probe to each negative terminal (1) and the other to each rectifier terminal (2).
5) Reverse the polarity of the tester probes and repeat step 4).
6) Check that one shows continuity and the other shows no continuity.
   If there is continuity, replace the rectifier.

SPECIFICATION

BATTERY

NOTE:

The battery used in each vehicle is one of the following two types, depending on specification.

Battery type		38B20L	55B24L
Rated capacity	AH/5HR, 12 Volts	28	38
Electrolyte	L (US/Imp. pt)	2.1 (4.44/3.70)	2.8 (5.92/4.93)
Electrolyte S.G.		1.28 when fully charged at 20°C (68°F)	

GENERATOR

Type	75 A type
Rated voltage	12 V
Nominal output	75 A
Permissible max. speed	18000 r/min.
No-load speed	1020 r/min (rpm)
Setting voltage	14.2 to 14.8 V
Exposed brush length	Standard: 10.5 mm (0.41 in.) Limit: 1.5 mm (0.06 in.)
Permissible ambient temperature	–30 to 90°C (–22 to 194°F)
Polarity	Negative ground
Rotation	Clockwise viewed from pulley side

TIGHTENING TORQUE SPECIFICATION

Fastening part	Tightening torque		
	N•m	kg-m	lb-ft
Body ground bolt	8	0.8	6.0
Generator bolts	23	2.3	16.5
“B” terminal inner nut	4.2	0.42	3.0
“B” terminal outer nut	8	0.8	6.0
Pulley nut	111	11.1	80.5
Rear end frame nuts	4.5	0.45	3.5
Rear end cover nuts	4.5	0.45	3.5
Rectifier “B” bolt	3.9	0.39	3.0
Stator stud bolts	8.8	0.88	6.5
Drive end bearing plate screws	2.6	0.26	2.0
Rectifier screws	2.0	0.20	1.5
Regulator and brush holder screws	2.0	0.20	1.5
Terminal plate bolt	3.8	0.38	3.0

SECTION 6K

EXHAUST SYSTEM

CONTENTS

GENERAL DESCRIPTION 6K-2
MAINTENANCE 6K-2
ON-VEHICLE SERVICE 6K-3
EXHAUST MANIFOLD 6K-4
EXHAUST PIPE 6K-4

GENERAL DESCRIPTION

The exhaust system consists of an exhaust manifold, three-way catalytic converter (TWC) in catalyst case, exhaust pipes, a muffler and seals, gasket and etc.
The three-way catalytic converter is an emission control device added to the exhaust system to lower the levels of Hydrocarbon (HC), Carbon Monoxide (CO), and Oxides of Nitrogen (NOx) pollutants in the exhaust gas.

MAINTENANCE

WARNING:

To avoid the danger of being burned, do not touch the exhaust system when the system is hot. Any service on the exhaust system should be performed when the system is cool.

At every interval of periodic maintenance service, and when vehicle is raised for other service, check exhaust system as follows:

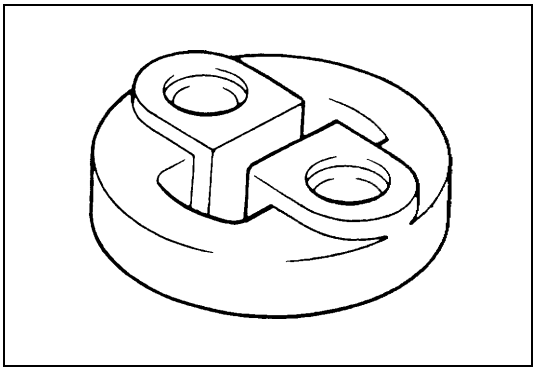

- Check rubber mountings for damage, deterioration, and out of position.

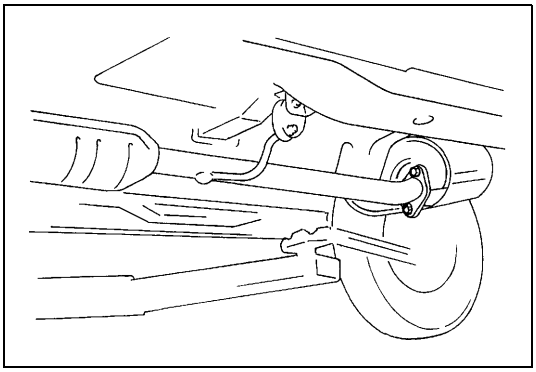

- Check exhaust system for leakage, loose connection, dent and damage.
- If bolts or nuts are loosened, tighten them to specified torque.
  Refer to “GENERAL DESCRIPTION”.

- Check nearby body areas damaged, missing, or mispositioned part, open seam, hole connection or any other defect which could permit exhaust fumes to seep into vehicle.
- Make sure that exhaust system components have enough clearance from underbody to avoid overheating and possible damage to passenger compartment carpet.
- Any defect should be fixed at once.

ON-VEHICLE SERVICE

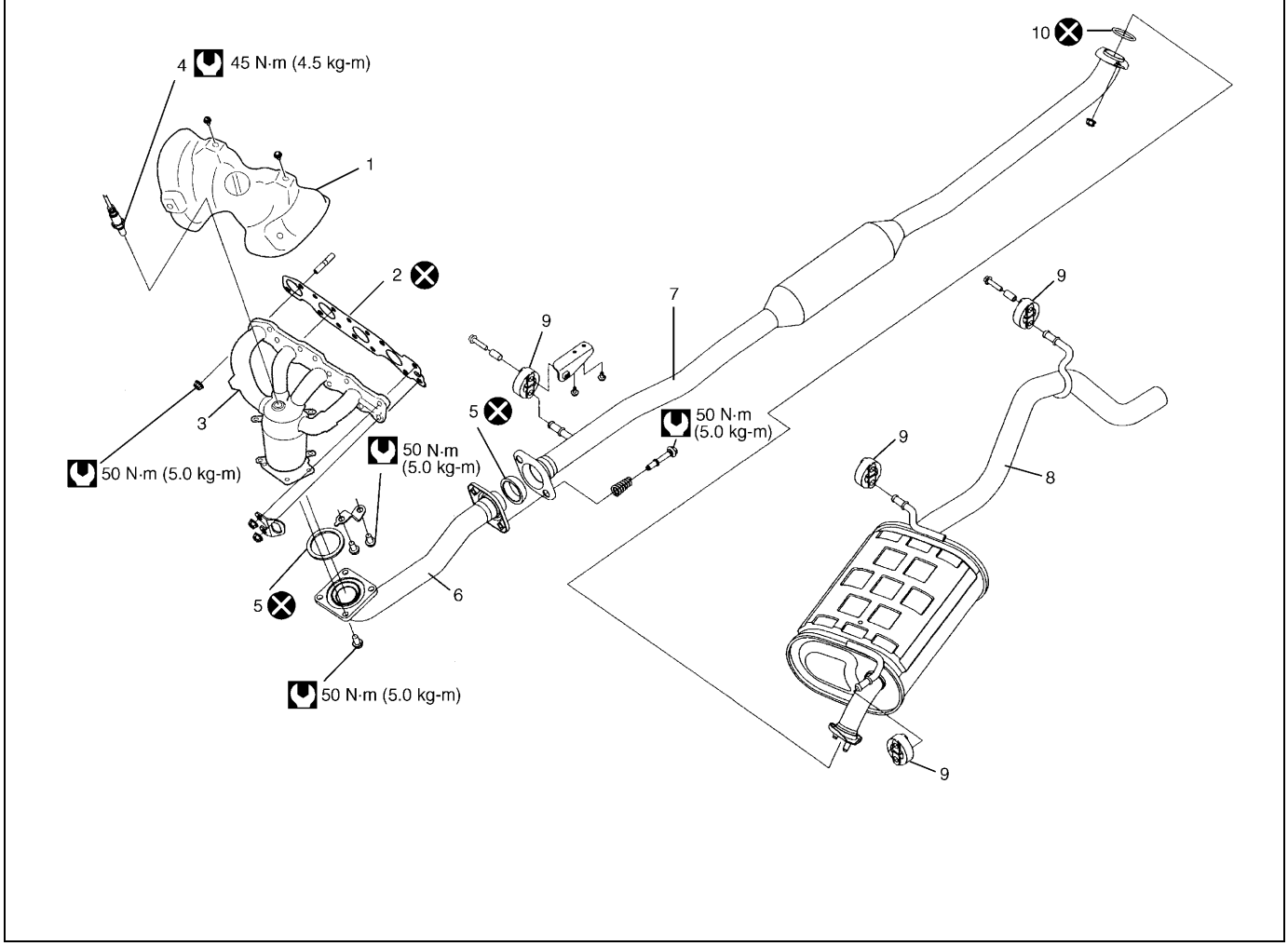

1. Exhaust manifold cover	5. Seal ring	9. Muffler mounting
2. Gasket	6. Exhaust No.1 pipe	10. Gasket
3. Exhaust manifold	7. Exhaust No.2 pipe	Tightening torque
4. Oxygen sensor	8. Muffler	Do not reuse.

WARNING:

To avoid the danger of being burned, do not touch the exhaust system when the system is hot. Any service on the exhaust system should be performed when the system is cool.

EXHAUST MANIFOLD

REMOVAL AND INSTALLATION

Refer to Section 6A1 for removal and installation procedures of exhaust manifold.

INSPECTION

Check gasket and seal for deterioration or damage.
Replace them as necessary.

EXHAUST PIPE

REMOVAL AND INSTALLATION

For replacement of exhaust pipe, be sure to hoist vehicle and observe WARNING under “MAINTENANCE” and the following.

CAUTION:
Exhaust pipe have three way catalytic converter in it, it should not be exposed to any impulse. Be careful not to drop it or hit it against something.

- Tighten bolts and nuts to specified torque when reassembling. Refer to “GENERAL DESCRIPTION” for location of bolts and nuts.
- After installation, start engine and check each joint of exhaust system for leakage.

SECTION 7A

MANUAL TRANSMISSION

WARNING:

For vehicles equipped with Supplemental Restraint (Air Bag) System :

- **Service on and around the air bag system components or wiring must be performed only by an authorized SUZUKI dealer. Refer to "Air Bag System Components and Wiring Location View" under "General Description" in air bag system section in order to confirm whether you are performing service on or near the air bag system components or wiring. Please observe all WARNINGS and "Service Precautions" under "On-Vehicle Service" in air bag system section before performing service on or around the air bag system components or wiring. Failure to follow WARNINGS could result in unintentional activation of the system or could render the system inoperative. Either of these two conditions may result in severe injury.**
- **Technical service work must be started at least 90 seconds after the ignition switch is turned to the "LOCK" position and the negative cable is disconnected from the battery. Otherwise, the system may be activated by reserve energy in the Sensing and Diagnostic Module (SDM).**

CONTENTS

GENERAL DESCRIPTION 7A-2
CONSTRUCTION AND SERVICING 7A-2
TRANSMISSION FOR 2WD MODEL..... 7A-3
TRANSMISSION FOR 4WD MODEL..... 7A-4
DIAGNOSIS 7A-5
ON-VEHICLE SERVICE 7A-5
OIL CHANGE 7A-6
DIFFERENTIAL SIDE OIL SEAL 7A-6
GEAR SHIFT CONTROL LEVER AND CABLE 7A-8
VEHICLE SPEED SENSOR (VSS) 7A-10
UNIT REPAIR OVERHAUL 7A-11
TRANSMISSION UNIT..... 7A-11
TRASMISSION CASE..... 7A-12
INPUT & COUNTER SHAFT..... 7A-13
GEAR SHIFTER & DIFFERENTIAL..... 7A-14
TRANSMISSION UNIT..... 7A-16
UNIT DISASSEMBLY 7A-17
FIFTH GEARS..... 7A-17
GEAR SHIFTER, INPUT SHAFT AND COUNTER SHAFT..... 7A-19
RIGHT CASE 7A-20
SUB ASSEMBLY SERVICE 7A-21
RIGHT CASE 7A-21
LEFT CASE..... 7A-21
INPUT SHAFT ASSEMBLY 7A-22
COUNTER SHAFT ASSEMBLY 7A-25
GEAR SHIFTER..... 7A-29
DIFFERENTIAL ASSEMBLY 7A-30
UNIT ASSEMBLY 7A-33
DIFFERENTIAL TO LEFT CASE 7A-33
FIFTH GEARS 7A-35
GEAR SHIFT AND SELECT SHAFT ASSEMBLY..... 7A-38
TIGHTENING TORQUE SPECIFICATION.... 7A-39
REQUIRED SERVICE MATERIAL..... 7A-40
SPECIAL TOOL 7A-40

GENERAL DESCRIPTION

CONSTRUCTION AND SERVICING

The transmission provides five forward speeds and one reverse speed by means of three synchronizers and three shafts-input shaft, countershaft and reverse gear shaft. All forward gears are in constant mesh, and reverse uses a sliding idler gear arrangement.

The low speed synchronizer is mounted on counter shaft and engaged with counter shaft first gear or second gear, while the high speed synchronizer is done on input shaft and engaged with input shaft third gear or fourth gear.

The fifth speed synchronizer on input shaft is engaged with input shaft fifth gear mounted on the input shaft.

The double cone synchronizing mechanism is provided to 2nd gear synchromesh device for high performance of shifting to 2nd gear.

The countershaft turns the final gear and differential assembly, thereby turning the front drive shafts which are attached to the front wheels.

4WD model is equipped with transfer assembly on transmission being mated to right side of differential output in transmission.

For servicing, it is necessary to use genuine sealant or its equivalent on mating surfaces of transmission case which is made of aluminum. The case fastening bolts must be tightened to specified torque by means of torque wrench. It is also important that all parts are thoroughly cleaned with cleaning fluid and air dried before reassembling.

Further, care must be taken to adjust preload of counter shaft taper roller bearings. New synchronizer rings are prohibited from being lapped with respective gear cones by using lapping compound before they are assembled.

TRANSMISSION FOR 2WD MODEL

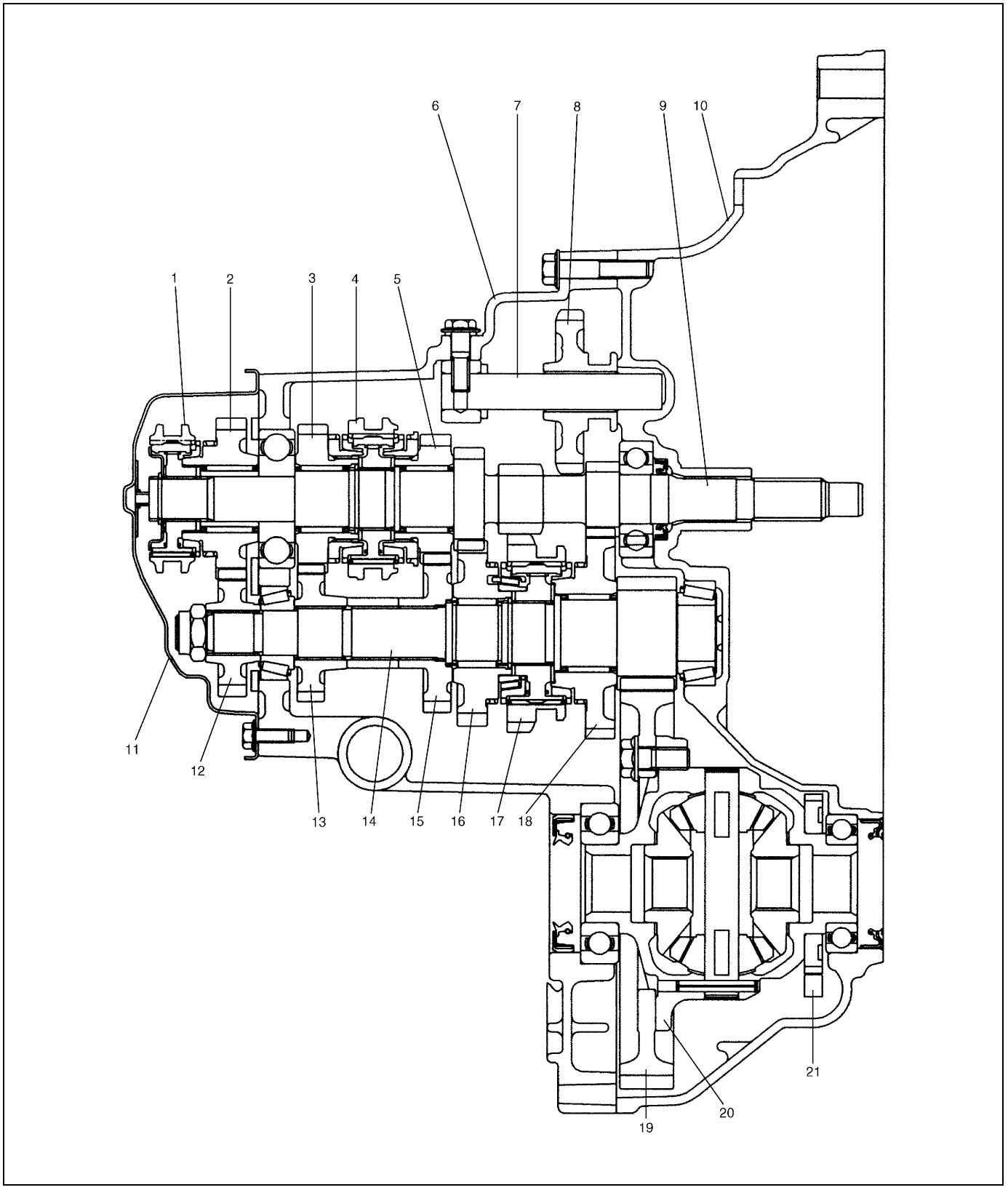

1. 5th speed sleeve & hub	8. Reverse idler gear	15. Countershaft 3rd gear
2. Input shaft 5th gear	9. Input shaft	16. Countershaft 2nd gear
3. Input shaft 4th gear	10. Right case	17. Low speed sleeve & hub
4. High speed sleeve & hub	11. Side cover	18. Countershaft 1st gear
5. Input shaft 3rd gear	12. Countershaft 5th gear	19. Final gear
6. Left case	13. Countershaft 4th gear	20. Differential case
7. Reverse gear shaft	14. Countershaft	21. Vehicle speed sensor

TRANSMISSION FOR 4WD MODEL

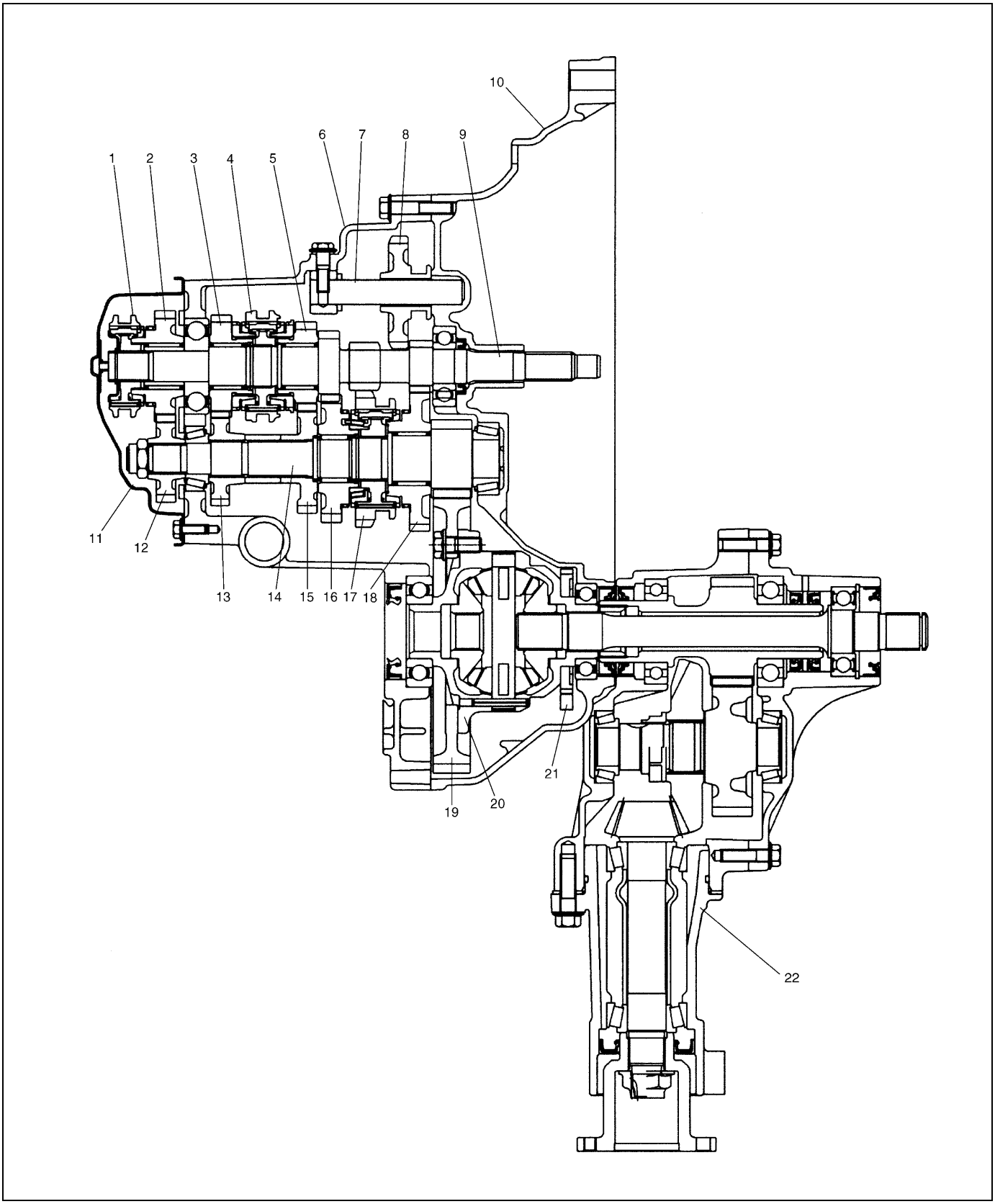

1. 5th speed sleeve & hub	7. Reverse gear shaft	13. Countershaft 4th gear	19. Final gear
2. Input shaft 5th gear	8. Reverse idler gear	14. Countershaft	20. Differential case
3. Input shaft 4th gear	9. Input shaft	15. Countershaft 3rd gear	21. Vehicle speed sensor
4. High speed sleeve & hub	10. Right case	16. Countershaft 2nd gear	22. Transfer assembly
5. Input shaft 3rd gear	11. Side cover	17. Low speed sleeve & hub	
6. Left case	12. Countershaft 5th gear	18. Countershaft 1st gear	

DIAGNOSIS

Condition	Possible Cause	Correction
Gears slipping out of mesh	Maladjusted gear shift/select control cables	Adjust.
	Worn shift fork shaft	Replace.
	Worn shift fork or synchronizer sleeve	Replace.
	Weak or damaged locating springs	Replace.
	Worn bearings on input shaft or counter shaft	Replace.
	Worn chamfered tooth on sleeve and gear	Replace sleeve and gear.
Hard shifting	Maladjusted gear shift/select control cables	Adjust.
	Inadequate or insufficient lubricant	Replenish.
	Improper clutch pedal free travel	Adjust.
	Distorted or broken clutch disc	Replace.
	Damaged clutch pressure plate	Replace clutch cover.
	Worn synchronizer ring	Replace.
	Worn chamfered tooth on sleeve or gear	Replace sleeve or gear.
	Worn gear shift/select control cables joint	Replace.
	Distorted shift shaft	Replace.
Noise	Inadequate or insufficient lubricant	Replenish.
	Damaged or worn bearing(s)	Replace.
	Damaged or worn gear(s)	Replace.
	Damaged or worn synchronizer parts	Replace.

ON-VEHICLE SERVICE

CAUTION:

Do not reuse circlip, spring pin, E-ring, oil seal, gasket, self locking nut and specified parts. Reuse of it can result in trouble.

OIL CHANGE

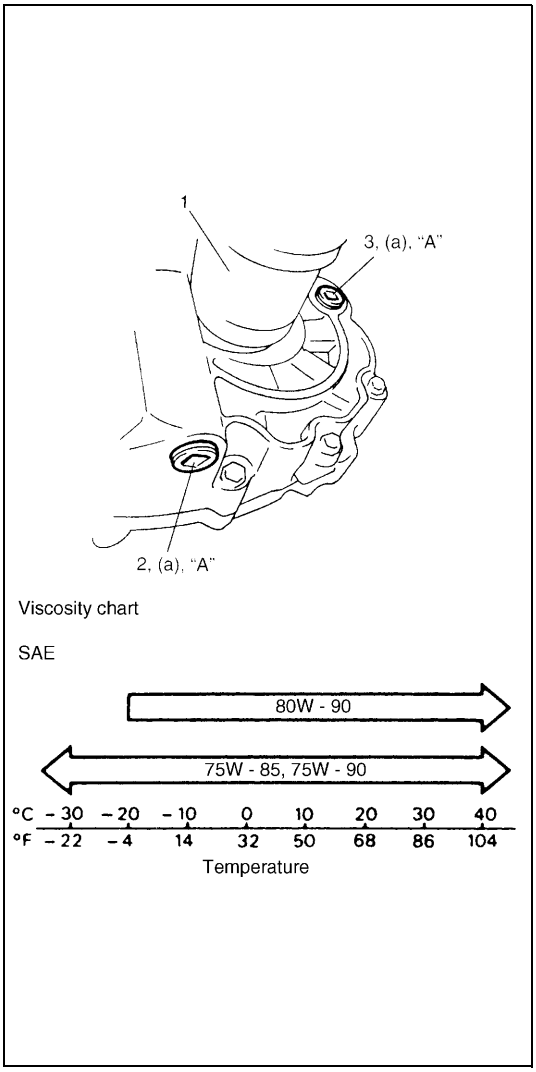

1) Before changing or inspecting oil, be sure to stop engine and lift vehicle horizontally.
2) With vehicle lifted up, check oil level and leakage.
   If leakage exists, correct it.
3) Drain old oil and fill new specified oil by specified amount (up to level hole).
4) Apply sealant to thread of drain plug (2) and level/filler plug (3) and torque them as specified below.

"A" : Sealant 99000-31110

Tightening torque
Transmission oil level/filler and drain plugs
(a) : 21 N·m (2.1 kg-m, 15.5 lb-ft)

NOTE:

- **It is highly recommended to use API GL-4 75W-90 gear oil.**
- **Whenever vehicle is hoisted for any other service work than oil change, also be sure to check for oil leakage.**

Transmission oil
: API GL-4
For SAE classification, refer to viscosity chart in the figure.

Transmission oil capacity
: 2.2 liters (4.6/3.9 US/Imp. pt)

1. Drive shaft (LH)

DIFFERENTIAL SIDE OIL SEAL

REPLACEMENT

1) Lift up vehicle and drain transmission oil.

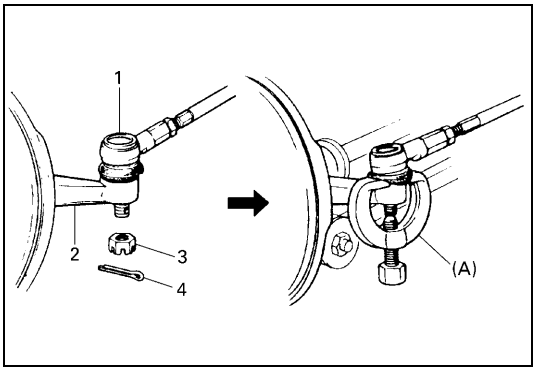

2) Remove wheel, and then remove tie-rod end (1) split pin (4) and castle nut (3).
3) Disconnect tie-rod end from knuckle (2) by using special tool.

Special tool
(A) : 09913-65210

4) Remove two stabilizer mount brackets from vehicle body.
5) Remove ball stud bolt and then separate suspension arm from knuckle.
6) Separate transfer from transmission assembly. (for 4WD vehicle)
   For detail, refer to Section 7D.

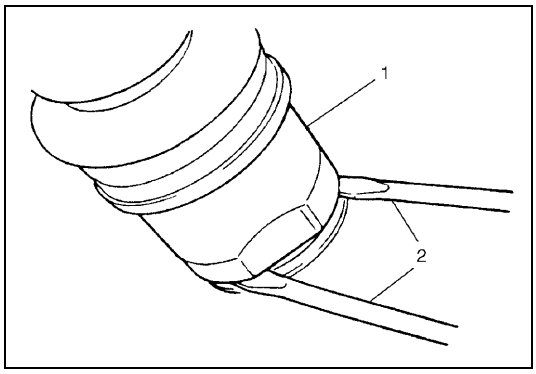

7) By using large size screwdrivers (2), pull out drive shaft joint (1) so as to release snap ring fitting of joint spline at differential side.Pushing knuckle portion outward, detach drive shaft at differential side.

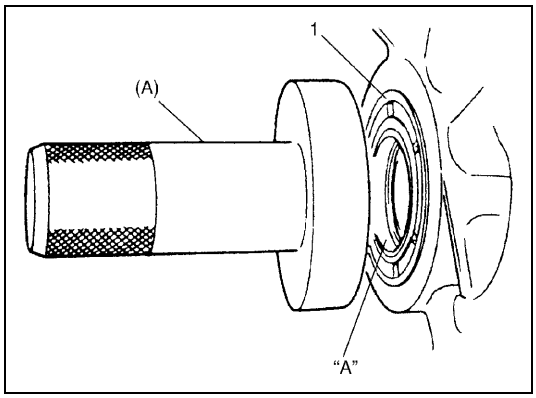

8) Remove oil seal (1) and install a new one until it becomes flush with case surface by using special tool and hammer.

NOTE:

When installing oil seal, face its spring side inward.

Special tool
(A) : 09913-75510 (2WD and LH of 4WD)
(A) : 09951-46010 (RH of 4WD)

9) Apply grease to oil seal lip and at the same time check drive shaft where oil seal contacts and make sure of its smoothness.

"A" : Grease 99000-25010

10) Insert drive shaft joint to differential gear.

CAUTION:
- **Be careful not to scratch oil seal lip with drive shaft joint while inserting.**
- **Make sure to insert drive shaft joint fully and seat its snap ring as it was.**
- **Do not hit joint boot with hammer or the like. Nothing but hands is allowed to use when inserting joint.**

11) Connect ball stud with knuckle and fasten with bolt to specification referring to Section 3D.
12) Connect tie-rod end with knuckle and fasten new nut to specified torque referring to Section 3D.
13) Install stabilizer mount brackets, fasten bolts to specified torque referring to Section 3D.
14) Fill transmission oil as specified and make sure that oil has been sealed with oil seal.

GEAR SHIFT CONTROL LEVER AND CABLE

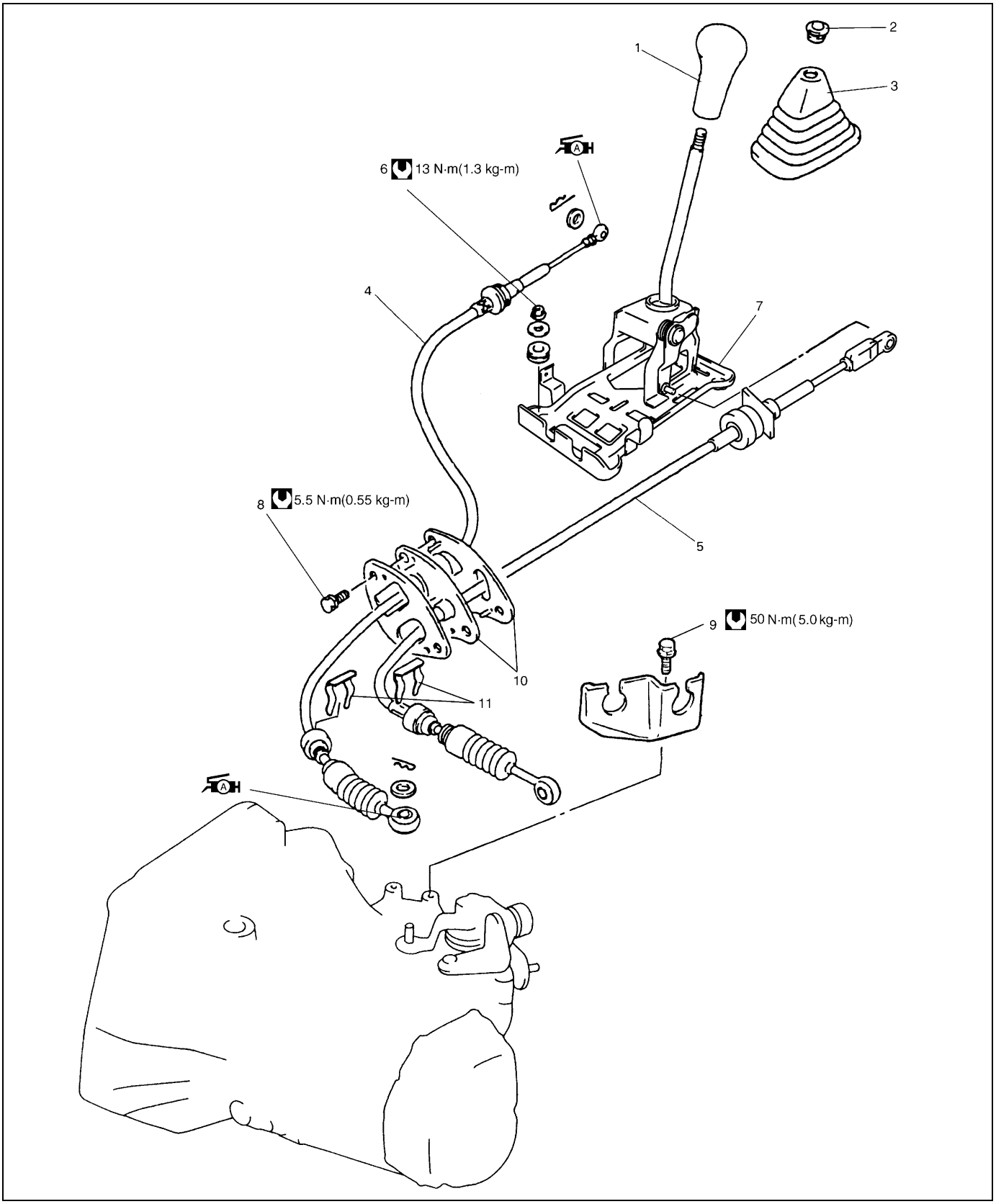

	1. Gear shift control lever knob	5. Gear select control cable	9. Cable bracket bolt
	2. Lever boot holder	6. Gear shift control cable guide nut	10. Cable grommet
	3. Gear shift lever boot	7. Gear shift control lever assembly	11. E-ring
A H	4. Gear shift control cable : Apply SUZUKI SUPER GREASE A 99000-25010 to connecting portion of gear shift control cable	8. Cable mounting bolt	Tightening torque

REMOVAL

1) Remove console box.
2) Disconnect gear shift and select control cables from gear shift control lever assembly.
3) Remove gear shift control cable guide nuts and gear shift lever assembly from body.
4) Disconnect shift and select cables from transmission.
5) Remove E-rings, cable grommet and cable clamp, and then remove shift and select cables from body.

INSTALLATION

Reverse removal procedure for installation and note as follows.

- Tighten each bolts and nuts to specified torque referring to previous figure.
- Apply grease to turning or sliding portions.

VEHICLE SPEED SENSOR (VSS)

REMOVAL

1) Disconnect negative cable at battery.

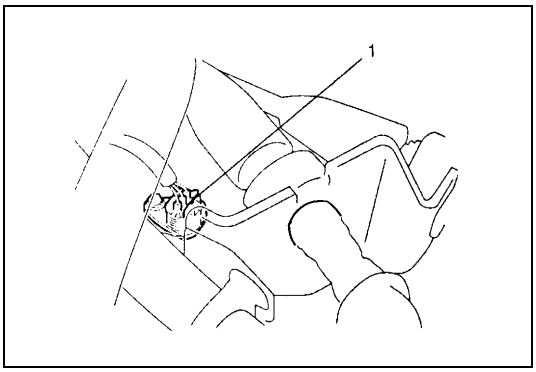

2) Disconnect VSS coupler (1).

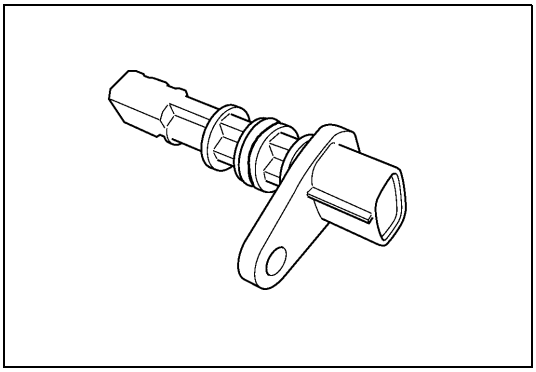

3) Remove VSS.

INSTALLATION

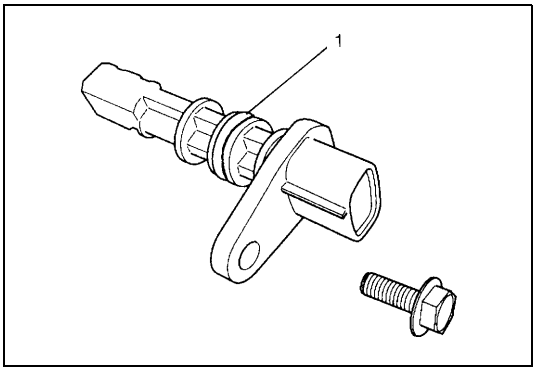

1) Check O-ring (1) and VSS surface for their flawlessness, apply grease to O-ring and then install VSS to transmission.

Grease 99000-25010

2) Connect negative cable at battery.

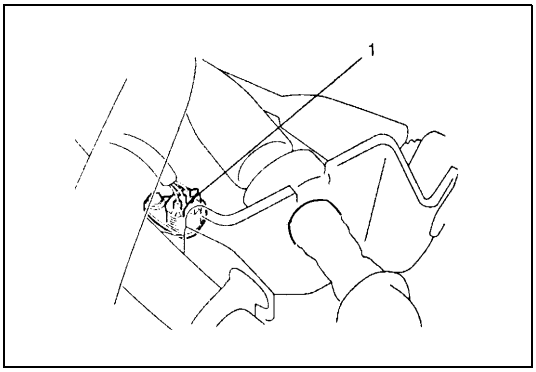

3) Connect VSS coupler (1).

UNIT REPAIR OVERHAUL

TRANSMISSION UNIT

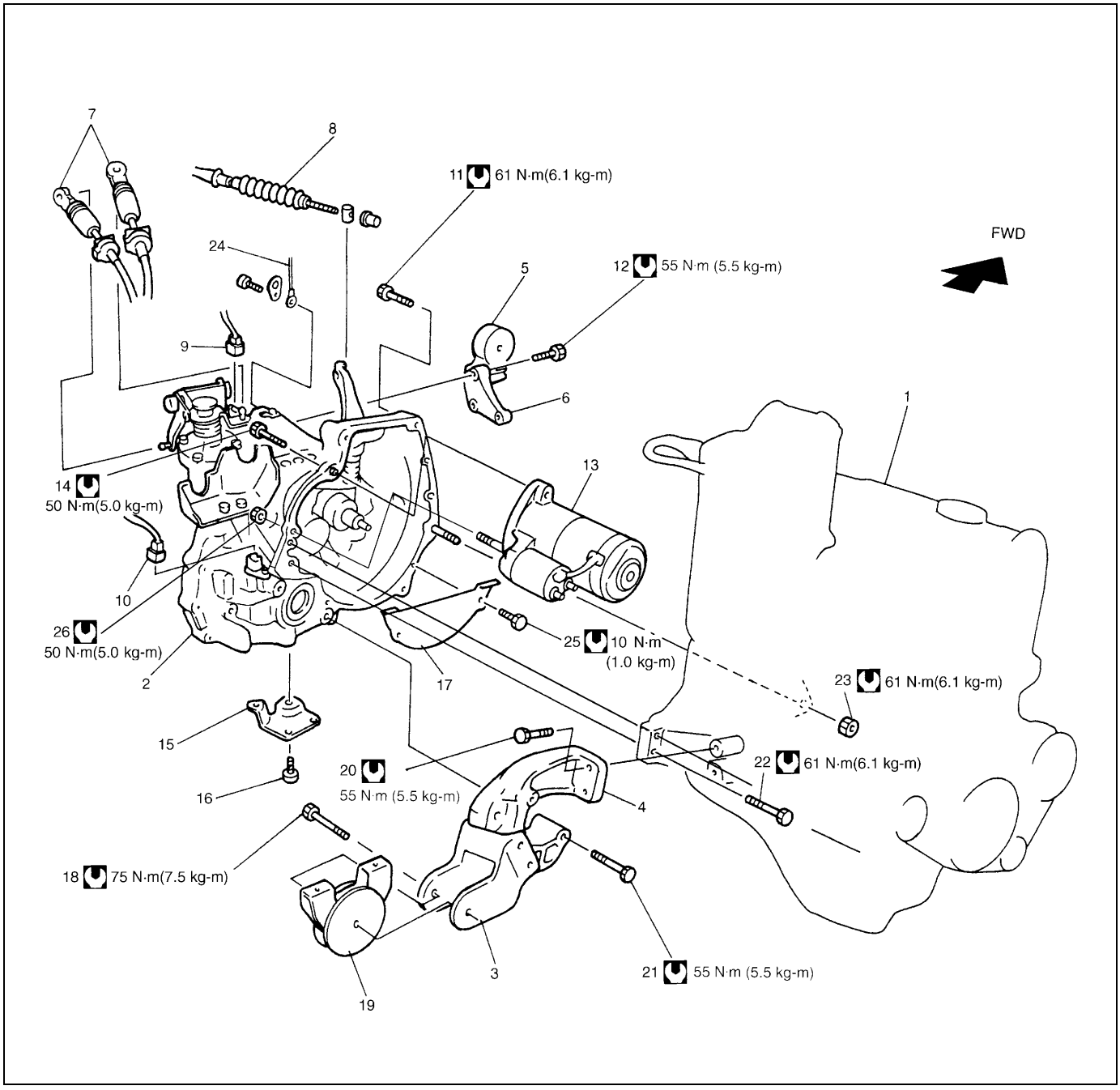

1. Engine	10. VSS connector	19. Engine rear mounting
2. Transmission	11. Transmission to engine bolts	20. Engine rear mounting No.2 bracket bolts
3. Engine rear mounting No.1 bracket	12. Engine left mounting bracket bolts	21. Transmission to engine rear mounting No.2 bracket bolt
4. Engine rear mounting No.2 bracket	13. Starting motor	22. Transmission to engine bolts
5. Engine left mounting	14. Starting motor bolt	23. Transmission to engine nut
6. Engine left mounting bracket	15. Engine rear mounting bracket stiffener	24. Ground cable
7. Shift & select control cables	16. Stiffener bolts	25. Clutch housing lower plate bolts
8. Clutch cable	17. Clutch housing lower plate	26. Starting motor nut
9. Backup lamp switch connector	18. Engine rear mounting bolt	Tightening torque

TRASMISSION CASE

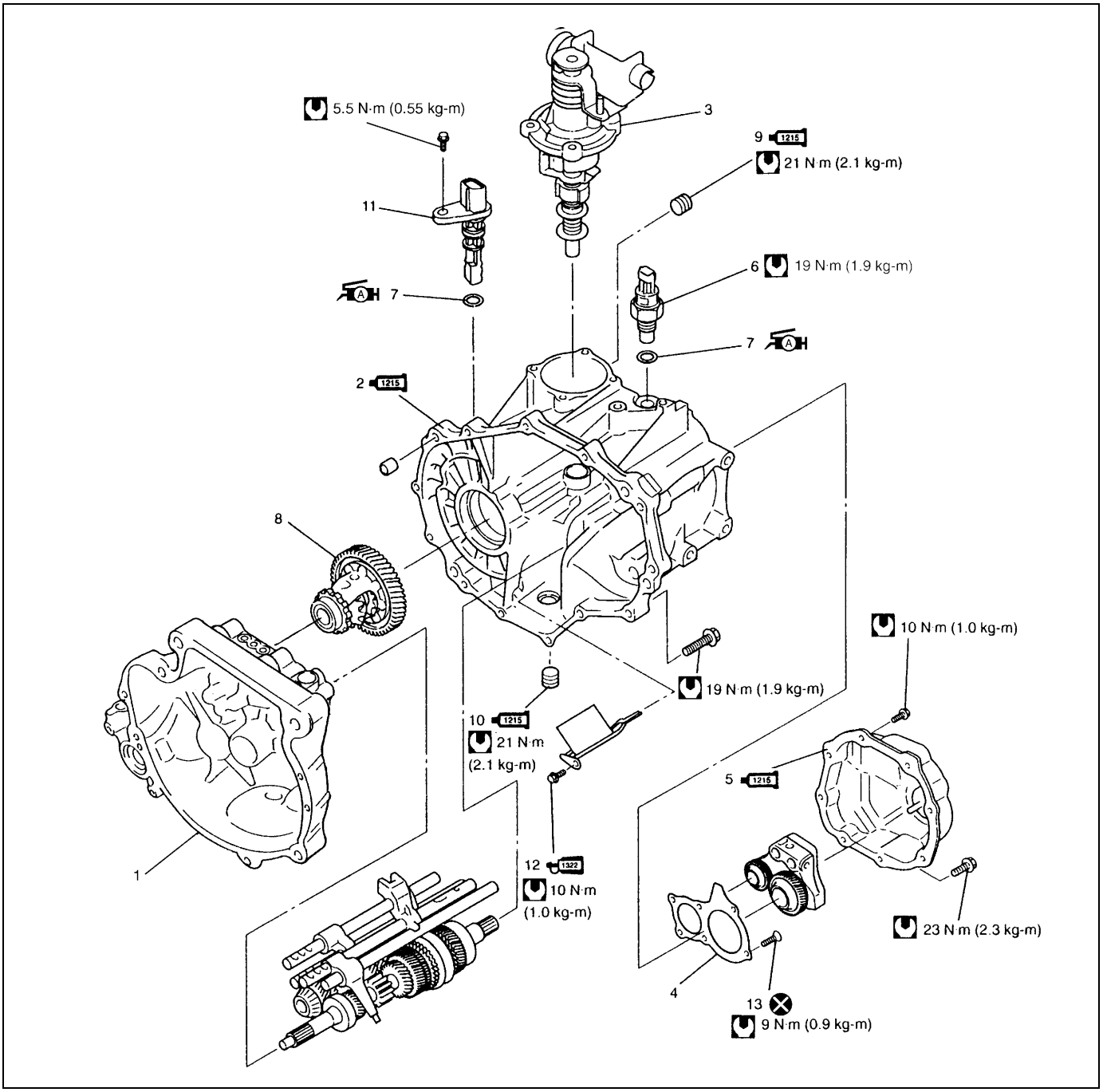

	1. Transmission right case	1215	9. Oil level/filler plug : Apply sealant 99000-31110 to all around thread part of plug.
1215	2. Transmission left case : Apply sealant 99000-31110 to mating surface of left case and right case.	1215	10. Oil drain plug : Apply sealant 99000-31110 to all around thread part of plug.
	3. Gear shifter assembly		11. VSS
	4. Transmission left case plate	1322	12. Oil gutter bolt : Apply thread lock 99000-32110 to all around thread part of bolt.
1215	5. Transmission side cover : Apply sealant 99000-31110 to mating surface of side cover and left case.		13. Left case plate screw
	6. Backup lamp switch		Tightening torque
A H	7. O-ring : Apply SUZUKI SUPER GREASE A 99000-25010 to O-ring.		Do not reuse.
	8. Differential assembly		

INPUT & COUNTER SHAFT

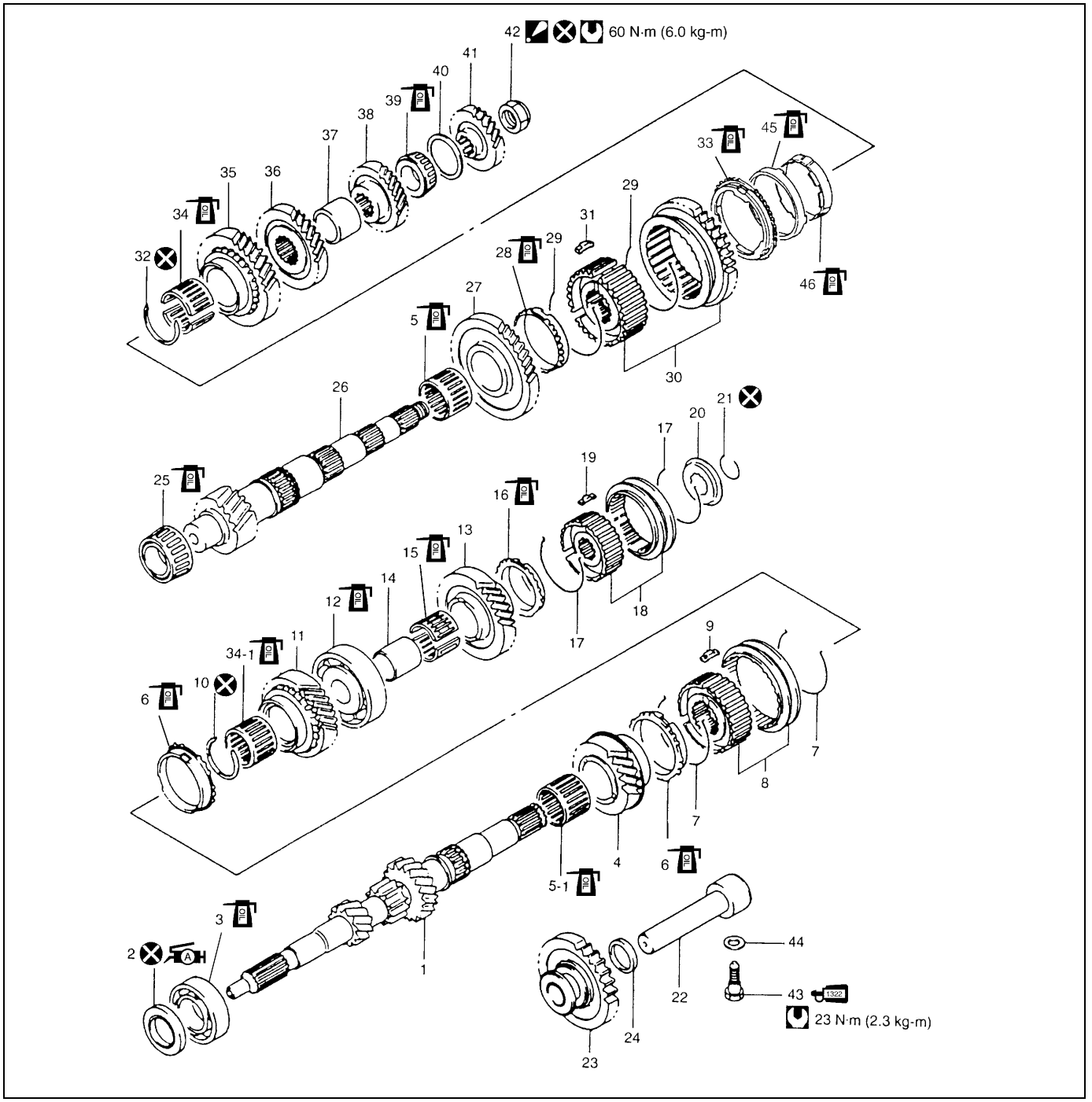

1. Input shaft	13. Input shaft 5th gear	26. Countershaft
2. Oil seal : Apply grease 99000-25010 to oil seal lip	14. 5th gear spacer	27. Countershaft 1st gear
3. Input shaft right bearing	15. 5th gear needle bearing (separated steel cage type)	28. 1st gear synchronizer ring
4. Input shaft 3rd gear	16. 5th speed synchronizer ring	29. Low speed synchronizer spring
5. Needle bearing (resin cage type)	17. 5th synchronizer spring	30. Low speed sleeve & hub
5-1. Needle bearing (resin cage type)	18. 5th speed sleeve & hub	31. Low speed synchronizer key
6. High speed synchronizer ring	19. 5th synchronizer key	32. Circlip
7. High speed synchronizer spring	20. 5th synchronizer hub plate	33. 2nd gear synchronizer outer ring
8. High speed sleeve & hub	21. Circlip	34. Needle bearing (separated steel cage type)
9. High speed synchronizer key	22. Reverse gear shaft	34-1. Needle bearing (steel cage type)
10. Circlip	23. Reverse idler gear	35. Countershaft 2nd gear
11. Input shaft 4th gear	24. Reverse shaft washer	36. Countershaft 3rd gear
12. Input shaft left bearing	25. Countershaft right bearing	37. 3rd & 4th gear spacer

38. Countershaft 4th gear		42. Countershaft nut : After tightening nut to specified torque, caulk nut securely.	46. 2nd gear synchronizer inner ring
39. Countershaft left bearing	1322	43. Reverse shaft bolt : Apply thread lock cement 99000-32110 to thread part of bolt.	Tightening torque
40. Bearing set shim		44. Washer	Do not reuse.
41. Countershaft 5th gear		45. Center cone	Apply transmission oil.

GEAR SHIFTER & DIFFERENTIAL

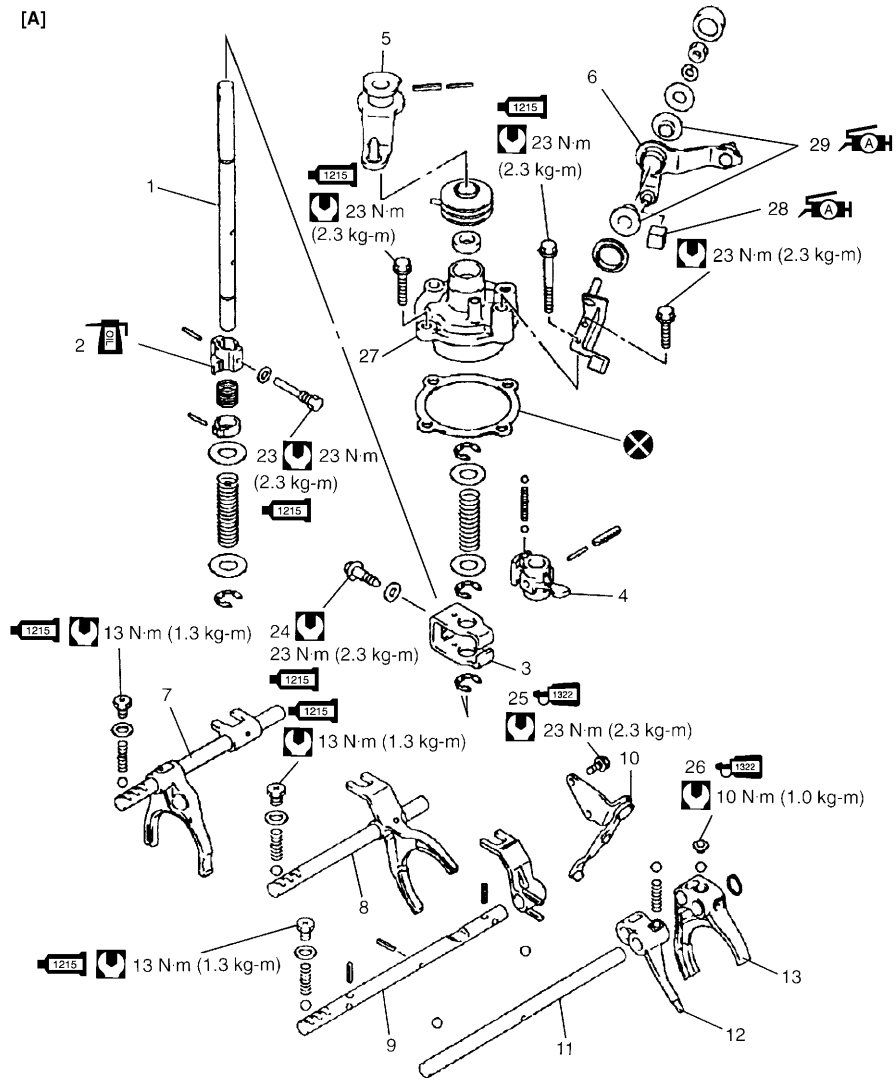

[B]

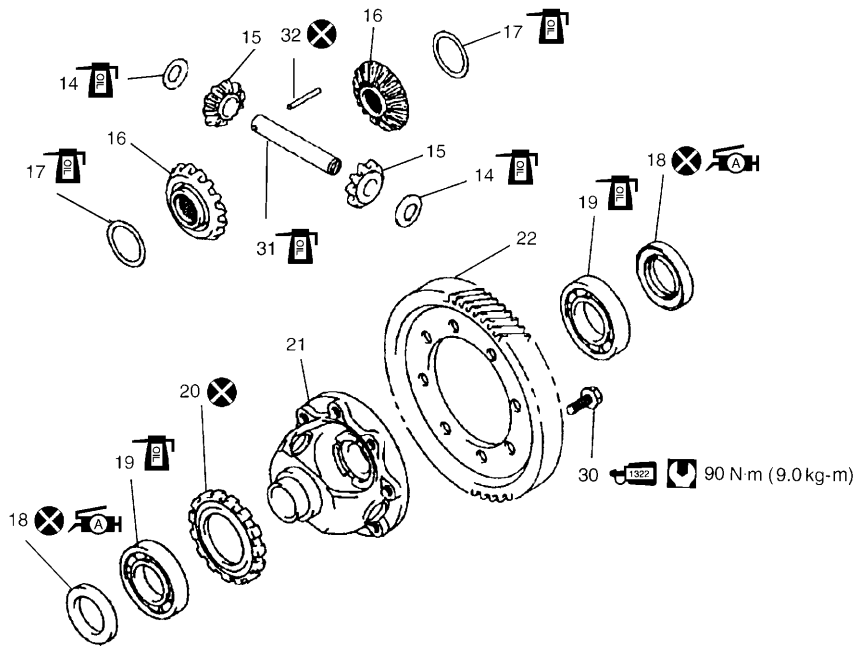

[A] : GEAR SHIFTER	12. Reverse gear shift arm	1322	25. Reverse gear shift lever bolt : Apply thread lock 99000-32110 to all around thread part of bolt.
[B] : DIFFERENTIAL	13. 5th gear shift fork	1322	26. 5th gear shift fork plug : Apply thread lock 99000-32110 to all around thread part of plug.
1. Gear shift & select shaft	14. Side gear washer		27. Guide case
2. 5th & reverse gear shift cam	15. Differential side pinion gear	A H	28. Select lever shaft bush : Apply grease 99000-25010 to whole area of bush.
3. Gear shift interlock plate	16. Differential side gear	A H	29. Select lever boss : Apply grease 99000-25010 to internal and external diameter
4. Gear shift & select lever	17. Side gear washer	1322	30. Final gear bolt : Apply thread lock 99000-32110 to all around thread part of bolt
5. Shift cable lever	A H 18. Differential side oil seal : Apply grease 99000- 25010 to oil seal lip.		31. Differential pinion shaft
6. Select cable lever	19. Differential side bearing		32. Differential pinion shaft pin
7. Low speed gear shift shaft	20. Speed sensor ring		Tightening torque
8. High speed gear shift shaft	21. Differential case		Do not reuse.
9. 5th & reverse gear shift shaft	22. Final gear		Apply transmission oil.
10. Reverse gear shift lever	1215 23. 5th to reverse interlock guide bolt : Apply sealant 99000-31110 to bolt thread.		
11. 5th & reverse gear shift guide shaft	1215 24. Gear shift interlock bolt : Apply sealant 99000-31110 to bolt thread.		

TRANSMISSION UNIT

DISMOUNTING

Under Hood

1) Disconnect negative cable at battery.
2) Undo wiring harness clamps, disconnect backup lamp switch coupler, VSS coupler and ground cable.
3) Disconnect clutch cable from clutch release lever and bracket.
4) Disconnect gear shift and select control cables.
5) Remove water pipe bracket bolts from transmission.

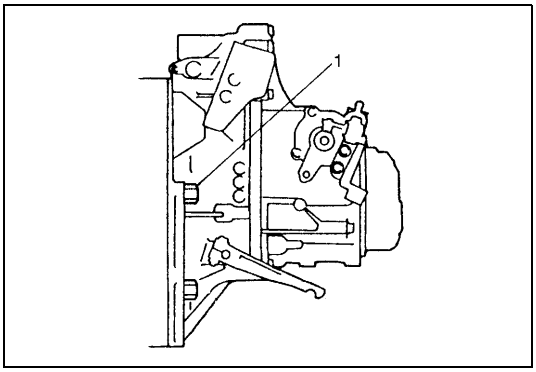

6) Remove transmission bolts (1).
7) Remove starting motor taking out its bolts.
8) Support engine by using lifting device.

On Lift

9) Drain transmission oil referring to “OIL CHANGE” in this section.
10) Remove left and right drive shaft referring to Section 4A.
11) Remove left side of engine under cover.

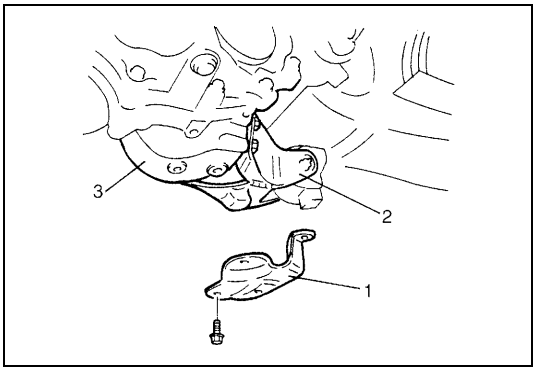

12) Remove engine rear mounting bracket stiffener (1).
13) Remove clutch housing lower plate.
14) Remove engine rear mounting No.1 bracket (2) with No.2 bracket (3).
15) Remove transfer referring to Section 7D (if equipped).
16) Remove transmission to engine bolt and nut.
17) Lower vehicle and support transmission with transmission jack.

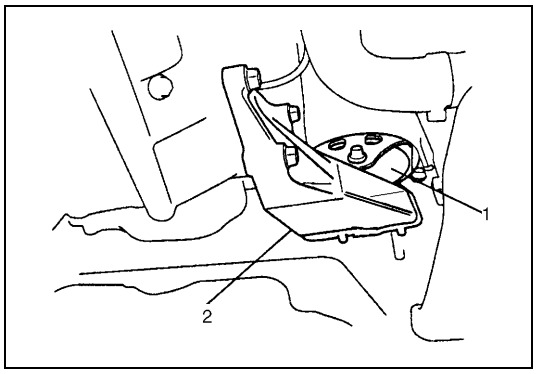

18) Remove engine left mounting (1) with bracket (2).

19) Remove other attached parts from transmission, if any.
20) Pull transmission out so as to disconnect input shaft from clutch disc and then lower it.

REMOUNTING

CAUTION:
Care should be taken not to scratch oil seal lip with drive shaft while raising transmission.
Do not hit drive shaft joint with hammer when installing it into differential gear.

Remount transmission in reverse order of dismounting procedure noting the following.

- Refer to Section 7D for installing transfer (if equipped).
- Refer to the first figure of “UNIT REPAIR OVERHAUL” for fastener specified torque.
- Push in drive shaft joints (right & left) fully so as to snap ring of shaft engages with differential gear.
- Set each clamp for wiring securely.
- After connecting clutch cable, be sure to adjust its play properly.
  Refer to Section 7C.
- Fill transmission with oil as specified.
- Connect battery and check function of engine, clutch and transmission.

UNIT DISASSEMBLY

FIFTH GEARS

1) Remove side cover bolts and take off transmission side cover.

CAUTION:
Care should be taken not to distort side cover when it is removed from left case.

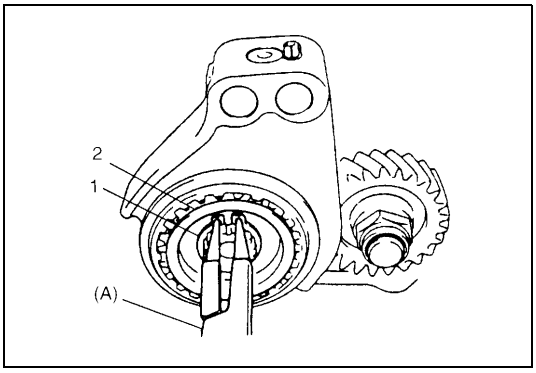

2) Using special tool, remove circlip (1) and then hub plate (2).

Special tool
(A) : 09900-06107

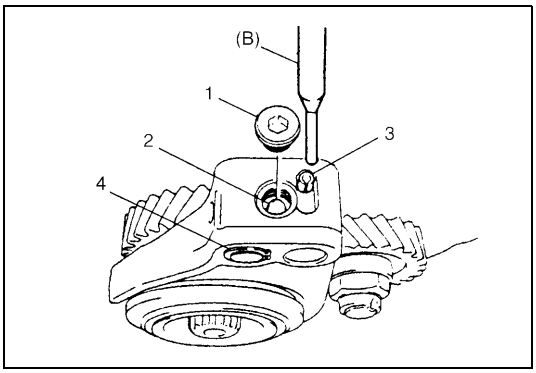

3) If equipped, remove shift fork plug (1) and guide ball (2).

NOTE:
Use of magnet would facilitate removal of guide ball.

4) Drive out spring pin (3) by using special tool and hammer.

Special tool
(B) : 09922-85811

5) If equipped, remove circlip (4) by using circlip plier.

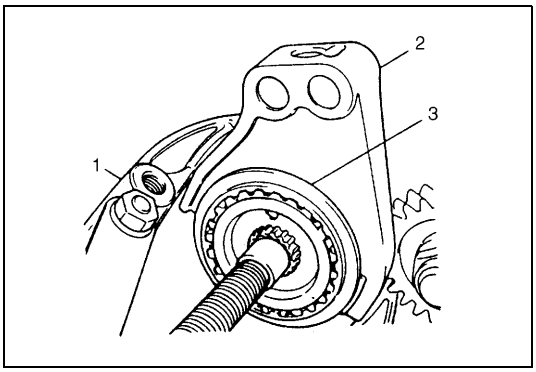

6) Remove gear shift fork (2), sleeve & hub assembly (3), synchronizer ring spring, synchronizer ring and 5th gear all together.Use gear puller (1) for removal if spline fitting of hub is tight.

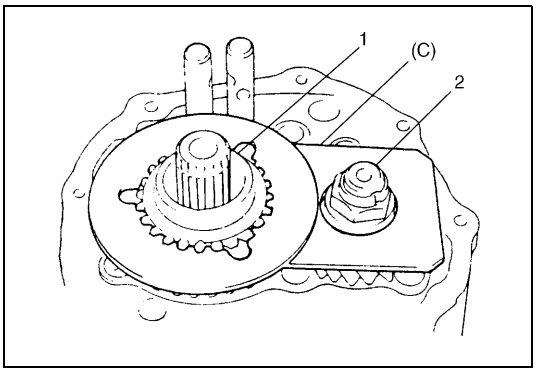

7) Unfasten caulking of countershaft nut, install input shaft 5th gear (1) and special tool to stop rotation of shafts, and then remove countershaft nut (2).

Special tool
(C) : 09927-76010

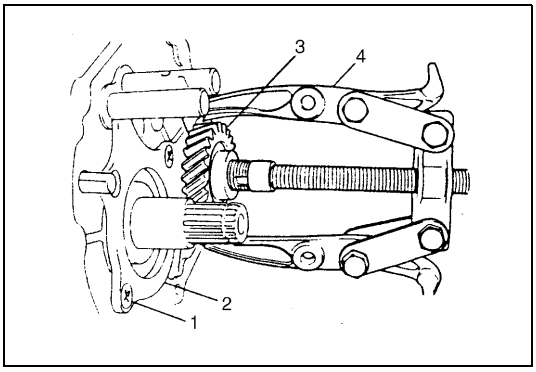

8) Remove special tool, input shaft 5th gear, needle bearing of separated steel cage type and then counter shaft 5th gear. Gear puller (4) would be necessary if spline fitting of counter shaft 5th gear (3) is tight.
9) Remove plate screws (1) and take off left case plate (2), and then bearing set shim.

GEAR SHIFTER, INPUT SHAFT AND COUNTER SHAFT

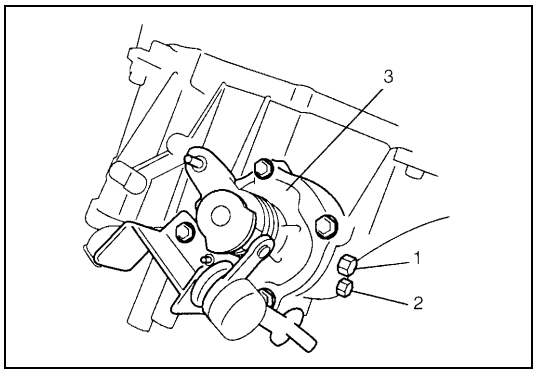

1) Remove gear shift interlock bolt (1) and 5th to reverse interlock guide bolt (2) from transmission case.
2) Remove gear shifter assembly (3).

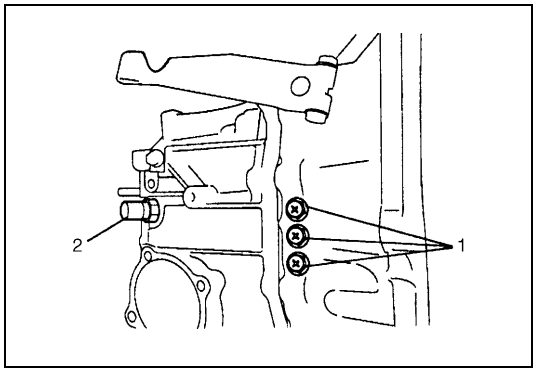

3) Remove gear shift locating bolts (1) with washers, then take out locating springs and steel balls.
4) Remove back up light switch (2).

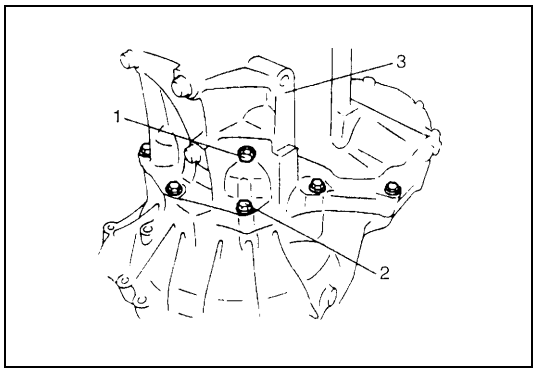

5) Remove reverse shaft bolt (1) with washer.
6) Remove case bolts (2) from outside and another bolts from clutch housing side.
7) Tapping left case (3) flanges with plastic hammer, remove left case.

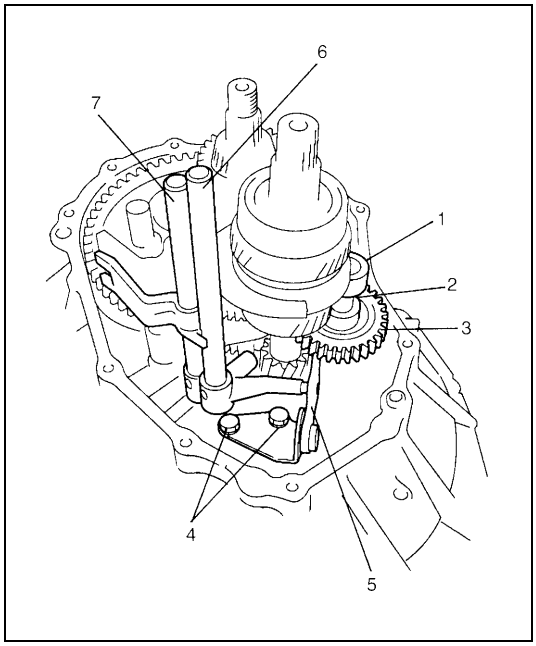

8) Pull out reverse gear shaft (1) with washer (2), then take off reverse idler gear (3).
9) Remove reverse gear shift lever bolts (4), and reverse gear shift lever (5).
10) Pull out 5th & reverse gear shift guide shaft (6) together with 5th & reverse gear shift shaft (7).

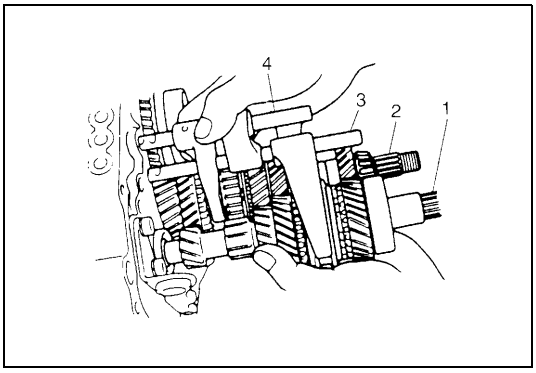

11) Tapping input shaft end with plastic hammer, push it out as assembly from case a little, then take out input shaft assembly (1), counter shaft assembly (2), high speed gear shift shaft (3) and low speed gear shift shaft (4) all at once.

12) Remove counter shaft left bearing cup from left case.
13) Remove differential side left oil seal also from left case.

RIGHT CASE

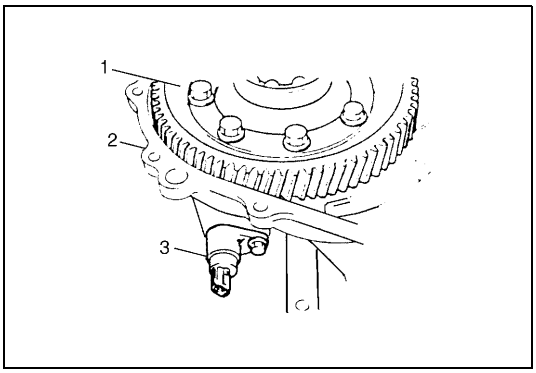

1) Remove differential gear assembly (1) from right case (2).
2) Remove bolt and then pull out VSS (3).

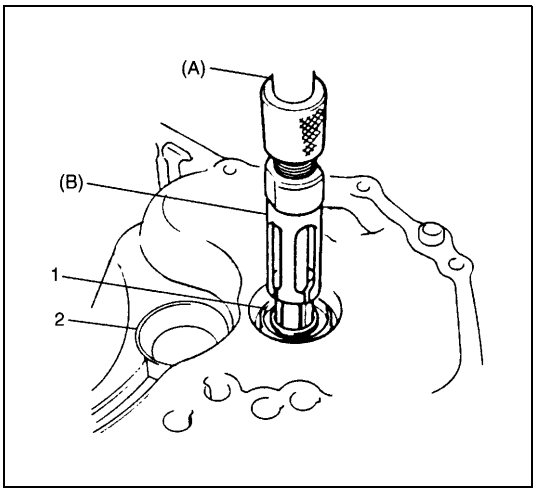

3) If input shaft right bearing has been left in right case, pull it out by using special tools.
   Remove input shaft oil seal (1) by using special tools.

   Special tool
   (A) : 09930-30104
   (B) : 09923-74510

4) Also pull out countershaft right bearing cup (2) by using special tools.

   Special tool
   09941-64511
   09923-30104

SUB ASSEMBLY SERVICE

NOTE:

Before installation, wash each part and apply specified gear oil to sliding faces of bearing and gear.

RIGHT CASE

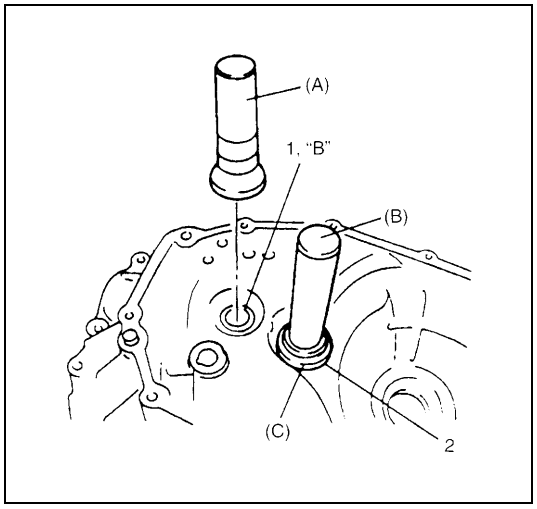

1) Install input shaft oil seal (1) facing its spring side upward. Use special tool and hammer for installation and apply grease to oil seal lip.

"B" : Grease 99000-25010

Special tool
(A) : 09951-76010

2) Install countershaft right bearing cup (2) by using special tools and hammer.

Special tool
(B) : 09924-74510
(C) : 09925-68210

LEFT CASE

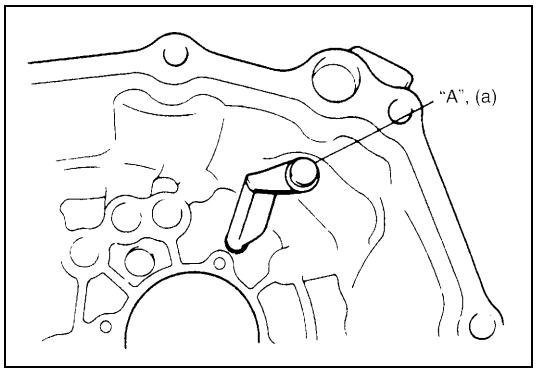

1) If input oil gutter has been removed, install it with bolt to which thread lock cement have been applied.

"A" : Thread lock cement 99000-32110

Tightening torque
Oil gutter bolt (a) : 10 N·m (1.0 kg-m, 7.5 lb-ft)

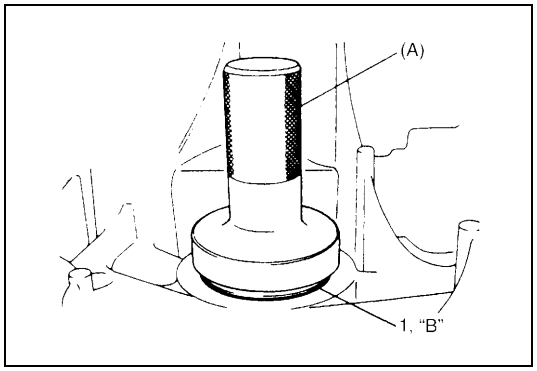

2) Install differential side left oil seal (1) facing its spring side inward until it becomes flush with case surface by using special tool with hammer, and then apply grease to its lip.

"B" : Grease 99000-25010

Special tool
(A) : 09913-75510

3) Install counter shaft left bearing cup into case bore by tapping it with plastic hammer lightly.

INPUT SHAFT ASSEMBLY

DISASSEMBLY

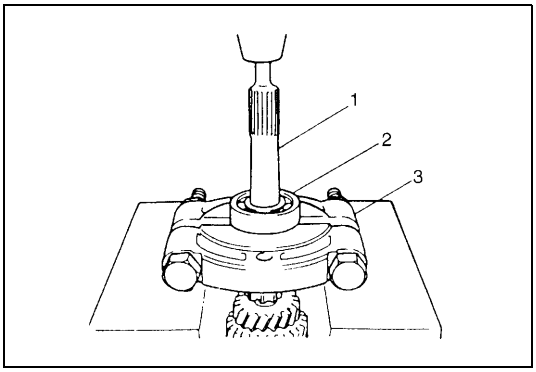

1) Remove input shaft right bearing (2) from input shaft (1) by using bearing puller (3) and press.

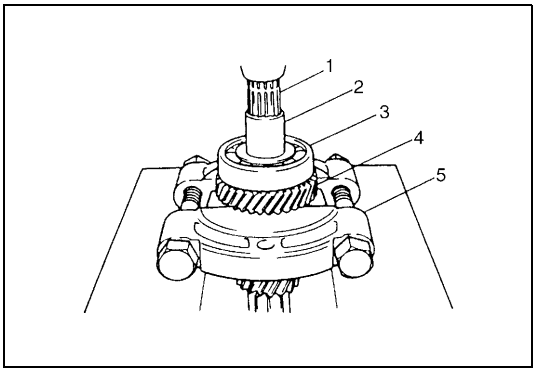

2) Drive out 5th gear spacer (2), left bearing (3) and 4th gear (4) all at once from input shaft (1) by using puller (5) and press.

CAUTION:
To avoid gear tooth from being damaged, support it at flat side of bearing puller.

3) Take out 4th gear needle bearing and high speed synchronizer ring.

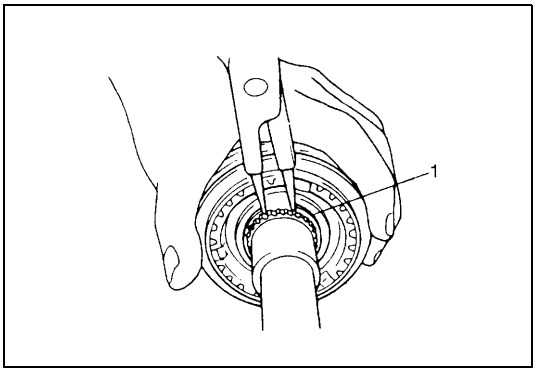

4) Using circlip pliers, remove circlip (1).

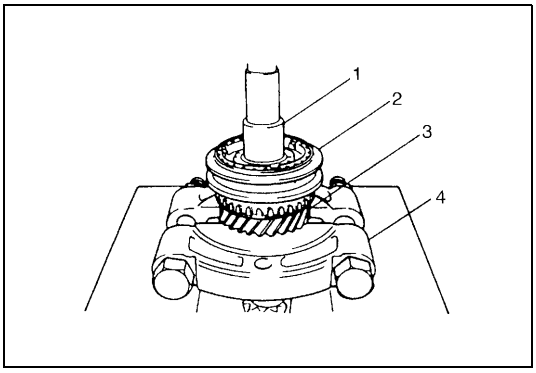

5) Drive out high speed synchronizer sleeve & hub assembly (2) together with 3rd gear (3) from input shaft (1) by using puller (4) and press.

CAUTION:
Make sure to use flat side of puller to avoid causing damage to 3rd gear tooth.

6) Take out 3rd gear needle bearing from shaft.

7) Disassemble synchronizer sleeve & hub assembly.

INSPECTION AND REASSEMBLY

1) Clean all components thoroughly, inspect them for any abnormality and replace with new ones as necessary.

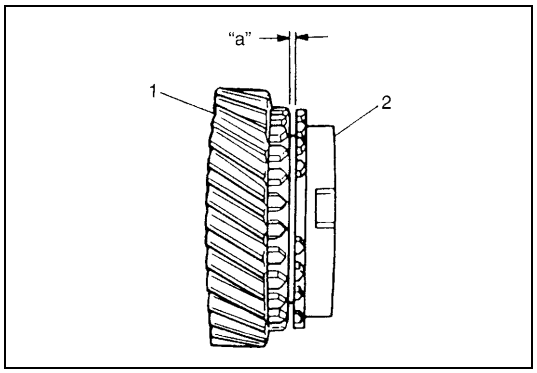

2) If synchronizer parts need to be repaired, check clearance "a" between ring (2) and gear (1), each chamfered tooth of gear, ring and sleeve, then determine parts replacement.

Clearance between synchronizer ring and gear
Standard "a" : 1.0 – 1.4 mm (0.039 – 0.055 in.)
Service limit "a" : 0.5 mm (0.019 in.)

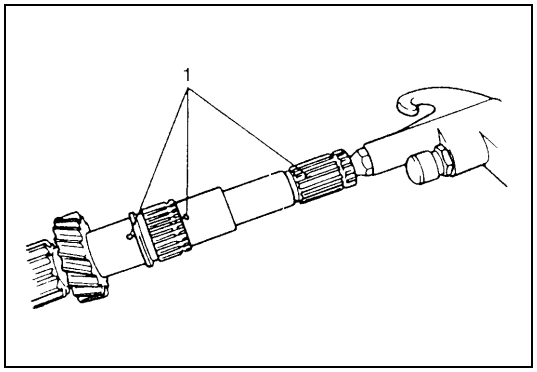

3) To ensure lubrication, air blow oil holes (1) and make sure that they are free from any obstruction.

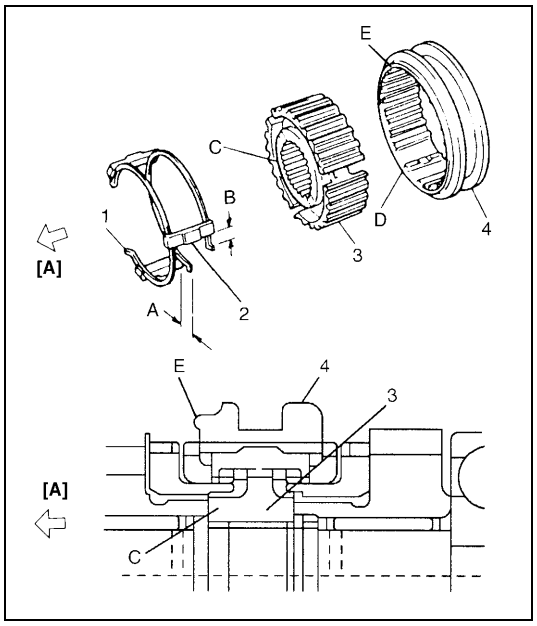

4) Fit high speed synchronizer sleeve (4) to hub (3), insert 3 keys (2) in it and then set springs (1) as shown in figure.

NOTE:

- **No specific direction is assigned to each key but it is assigned as sleeve & hub assembly.**
- **Size of high speed synchronizer sleeve, hub, keys and springs is between those of low speed and 5th speed ones.**

Synchronizer key installation position
: A = B

[A] :	3rd gear side
C :	Long flange
D :	Key way
E :	Projecting end

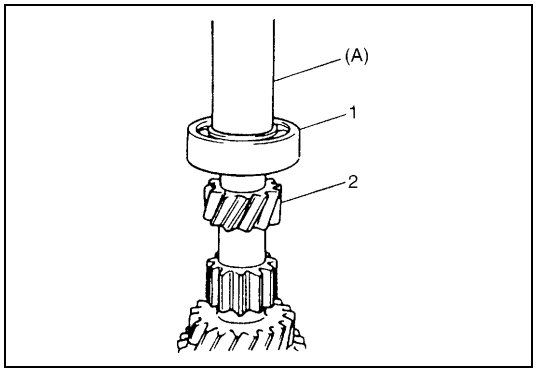

5) Drive in right bearing (1) to input shaft (2) by using special tool and hammer.

Special tool
(A) : 09913-80112

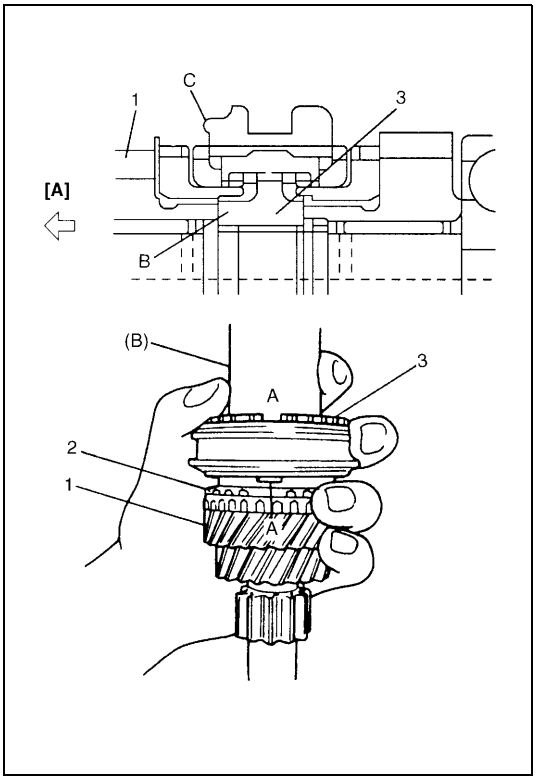

6) Install 3rd gear needle bearing of resin cage type, apply oil to it, then install 3rd gear (1) and synchronizer ring (2).
7) Drive in high speed sleeve & hub assembly (3) by using special tool and hammer, facing long flange side of hub to 3rd gear.

NOTE:

- **While press-fitting sleeve & hub, make sure that synchronizer ring key slots are aligned with keys in sleeve & hub assembly.**
- **Check free rotation of 3rd gear after press-fitting sleeve & hub assembly.**
- **Synchronizer rings for 3rd and 4th are identical.**

Special tool
(B) : 09913-84510

[A] :	3rd gear side
A :	Key way
B :	Long flange
C :	Projecting end

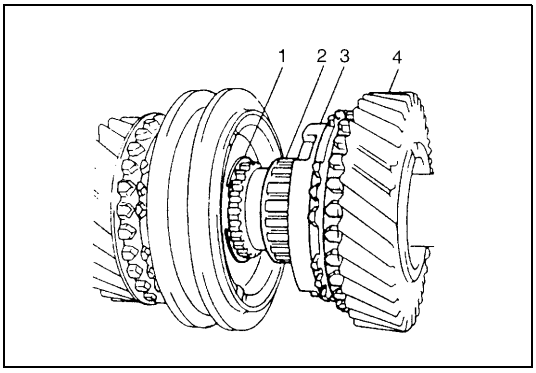

8) Install circlip (1) and confirm that circlip is installed in groove securely.
Install needle bearing (2) of steel cage type, apply oil to bearing and then install synchronizer ring (3) and 4th gear (4).

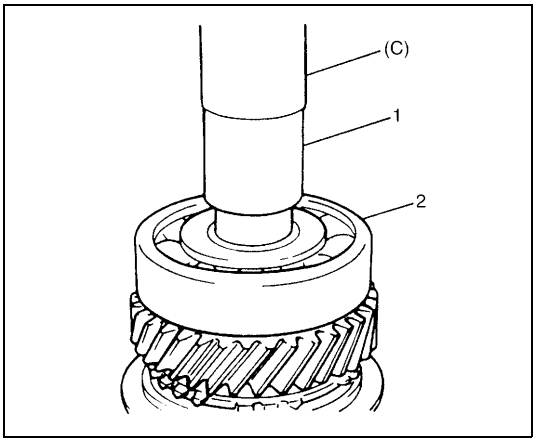

9) Press-fit left bearing (2) by using special tool and hammer.

Special tool
(C) : 09925-98221

10) Using the same special tool, drive in 5th gear spacer (1).

CAUTION:
To prevent 5th gear spacer from being distorted because of excessive compression, do not press-fit it with left bearing at once.

COUNTER SHAFT ASSEMBLY

DISASSEMBLY

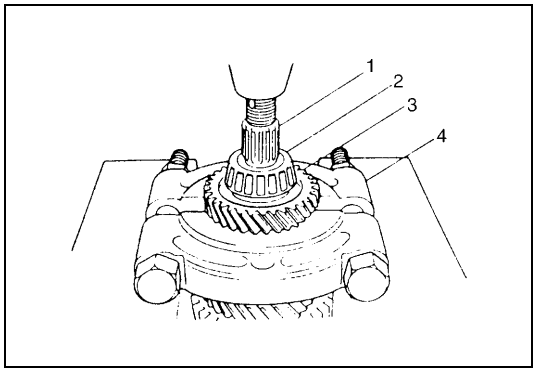

1) Drive out left bearing cone (2) with 4th gear (3) from counter shaft (1) by using puller (4) and press.

CAUTION:
- **Use puller and press that will bear at least 5 ton (11,000 lb) safely.**
- **To avoid tooth damage, support 4th gear at flat side of puller.**

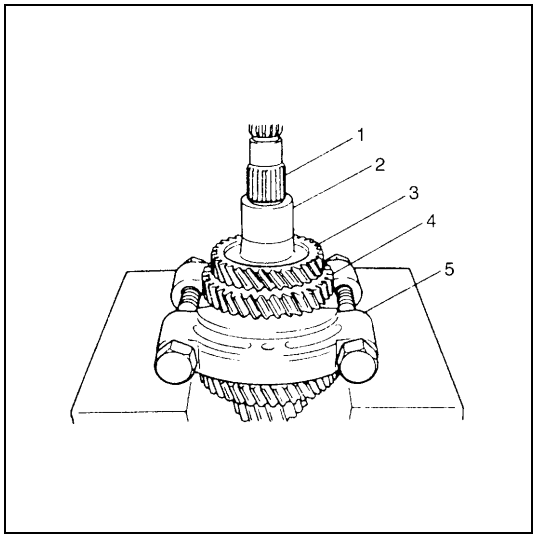

2) Apply puller (5) to 2nd gear (4) and drive out 3rd & 4th gear spacer (2) and 3rd gear (3) together with 2nd gear from counter shaft (1) by using press. Take out needle bearing of separated steel cage type from counter shaft.

CAUTION:
- **If compression exceeds 5 ton (11,000 lb), release compression once, reset puller support and then continue press work again.**
- **To avoid gear tooth from being damaged, support it at flat side of bearing puller.**

3) Take out 2nd synchronizer outer ring, center cone and inner ring.

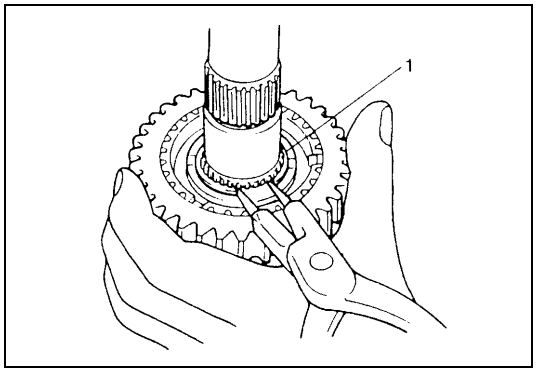

4) Using circlip pliers, remove circlip (1).

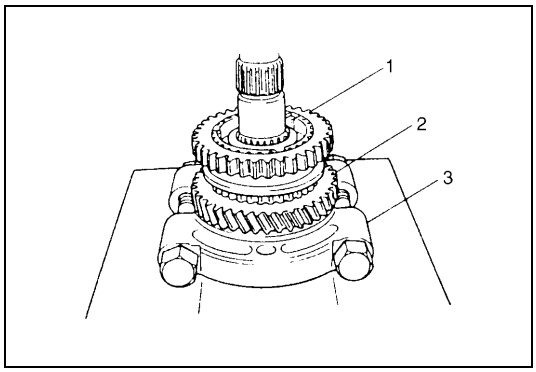

5) Apply puller (3) to 1st gear (2) and drive out low speed synchronizer sleeve & hub assembly (1) with gear by using press.

CAUTION:

To avoid gear tooth from being damaged, support it at flat side of bearing puller.

6) Disassemble synchronizer sleeve & hub assembly.

7) Take out needle bearing from shaft.

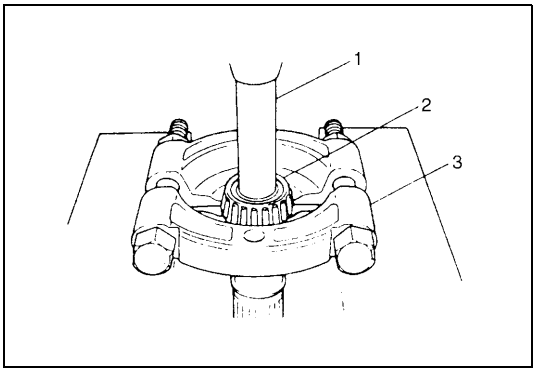

8) Remove right bearing cone (2) by using puller (3), metal stick (1) and press.

INSPECTION AND REASSEMBLY

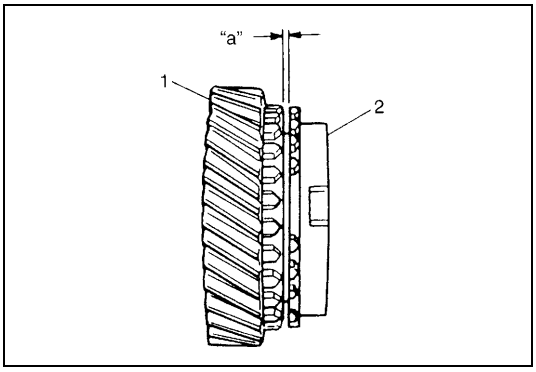

1) Clean all components thoroughly, inspect them for any abnormality and replace with new ones as necessary.
2) If synchronizer parts need to be repaired, check clearance "a" between ring (2) and gear (1), each chamfered tooth of gear, ring and sleeve, then determine parts replacement.

Clearance between synchronizer ring and gear
Standard "a" : 1.0 – 1.4 mm (0.039 – 0.055 in.)
Service limit "a" : 0.5 mm (0.019 in.)

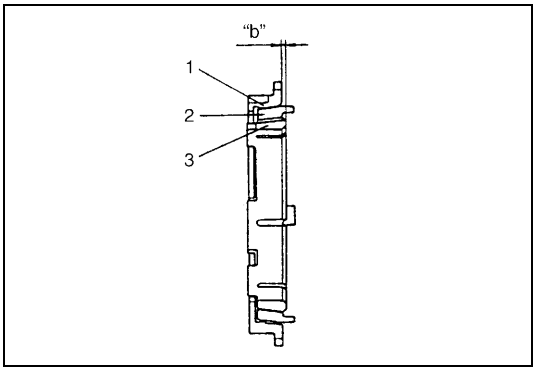

3) Put the synchronizer outer ring (1), inner ring (3) and the cone (2) together and then measure the step difference between the outer ring and the inner ring. And also check each chamfered tooth of gear and synchronizer ring and replace with new one, if necessary. Also, check gear tooth.

Difference between synchronizer outer ring and inner ring
Standard "b" : 1.0 – 1.4 mm (0.039 – 0.055 in.)
Service limit "b" : 0.5 mm (0.019 in.)

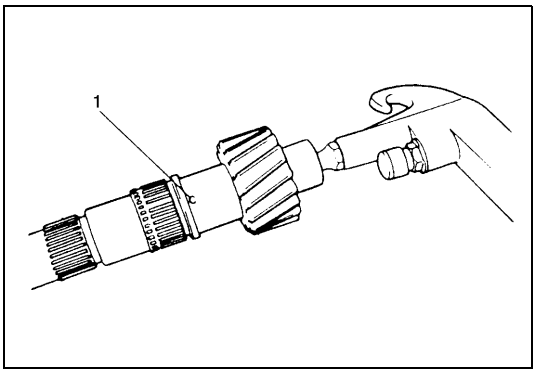

4) To ensure lubrication, air blow oil holes (1) and make sure that they are free from any obstruction.

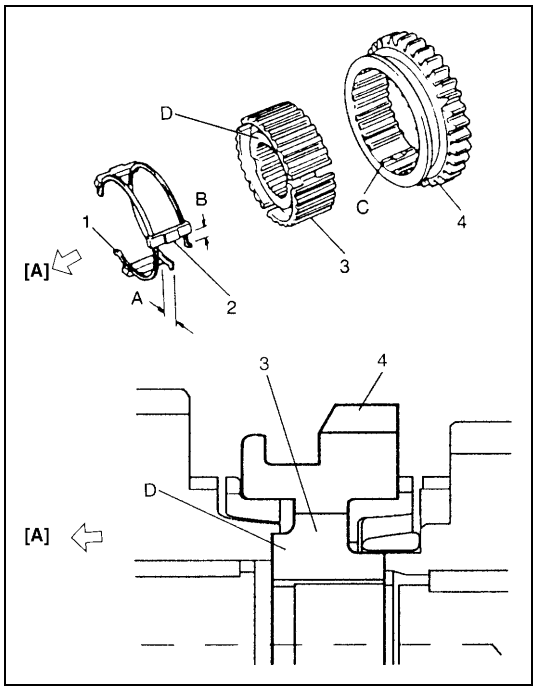

5) Fit low speed synchronizer sleeve (4) to hub (3), insert 3 keys (2) in it and then set springs (1) as shown in figure.

NOTE:

- **No specific direction is assigned to each key but it is assigned as sleeve & hub assembly.**
- **Size of low speed synchronizer keys and springs are the largest compared with those of high speed and 5th speed ones.**

Synchronizer key installation position
: A = B

[A] :	1st gear side
C :	Key way
D :	Short flange

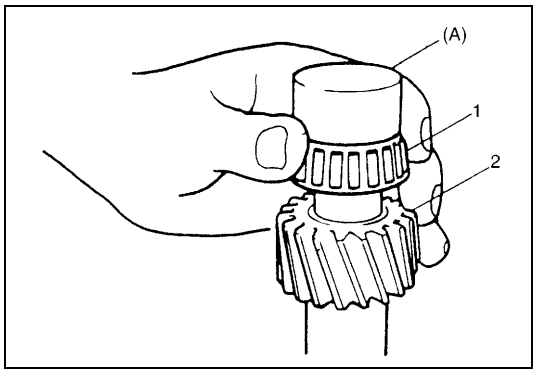

6) Install right bearing cone (1) to counter shaft (2) by using special tool and hammer.

Special tool
(A) : 09923-78210

7) Install needle bearing of resin cage type, apply oil to it, then install 1st gear and 1st gear synchronizer ring.

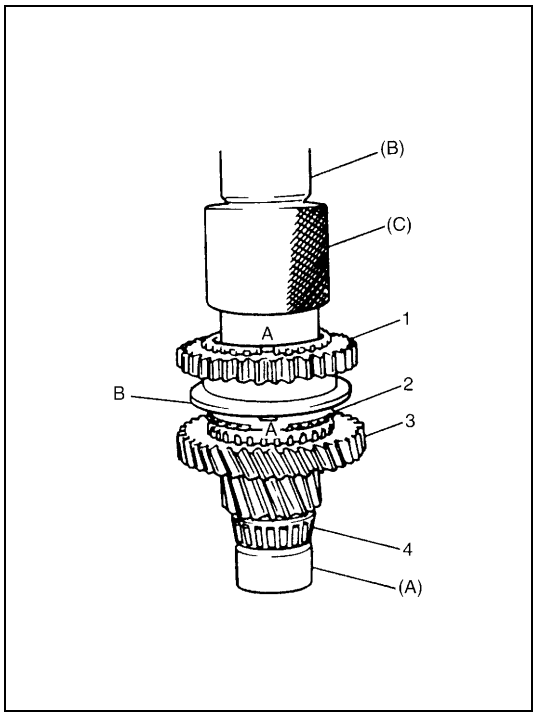

8) Drive in low speed sleeve & hub assembly (1) by using special tools and hammer, facing “B” side of sleeve to 1st gear.

NOTE:

- **Support shaft with special tool as shown in figure so that retainer of bearing cone (4) will be free from compression.**
- **Make sure that synchronizer ring (2) key slots are aligned with keys while press-fitting sleeve & hub assembly.**
- **Check free rotation of 1st gear (3) after press-fitting sleeve & hub assembly.**

Special tool
(A) : 09923-78210
(B) : 09925-18011
(C) : 09940-53111

A :	Align key slots with keys

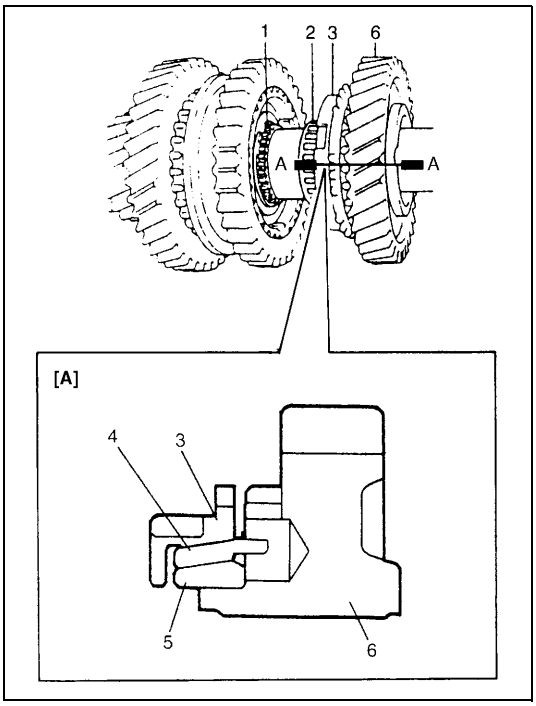

9) Install circlip (1) and confirm that circlip is installed in groove securely.
   Install needle bearing (2) of separated steel cage type, apply oil to bearing.
   With synchronizer outer ring (3), center cone (4) & inner ring (5) put together and installed to 2nd gear (6) as shown in figure.

[A] : SECTION A - A

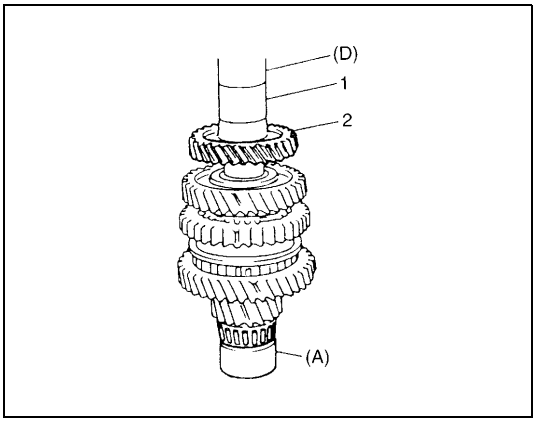

10) Press-fit 3rd gear (2) and spacer (1) by using special tools and press.

CAUTION:
Press-fit 3rd gear and spacer first, and then 4th gear later separately so that counter shaft will not be compressed excessively.

Special tool
(A) : 09923-78210
(D) : 09913-80112

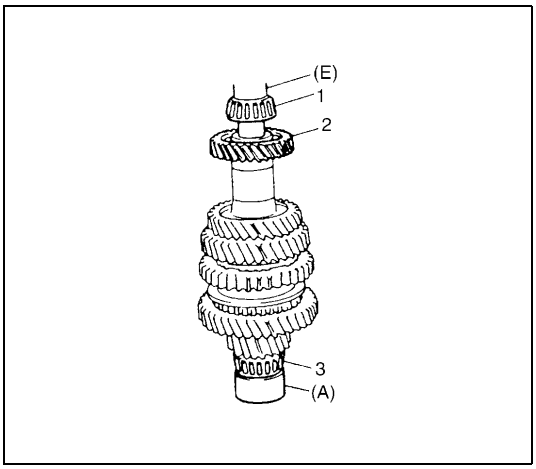

11) Press-fit 4th gear (2) by using the same procedure as the above.
12) Install left bearing cone (1) by using special tools and hammer.

NOTE:
For protection of right bearing cone (3), always support shaft with special tool as illustrated.

Special tool
(A) : 09923-78210
(E) : 09925-98221

GEAR SHIFTER

Gear Shift and Select Shaft Assembly

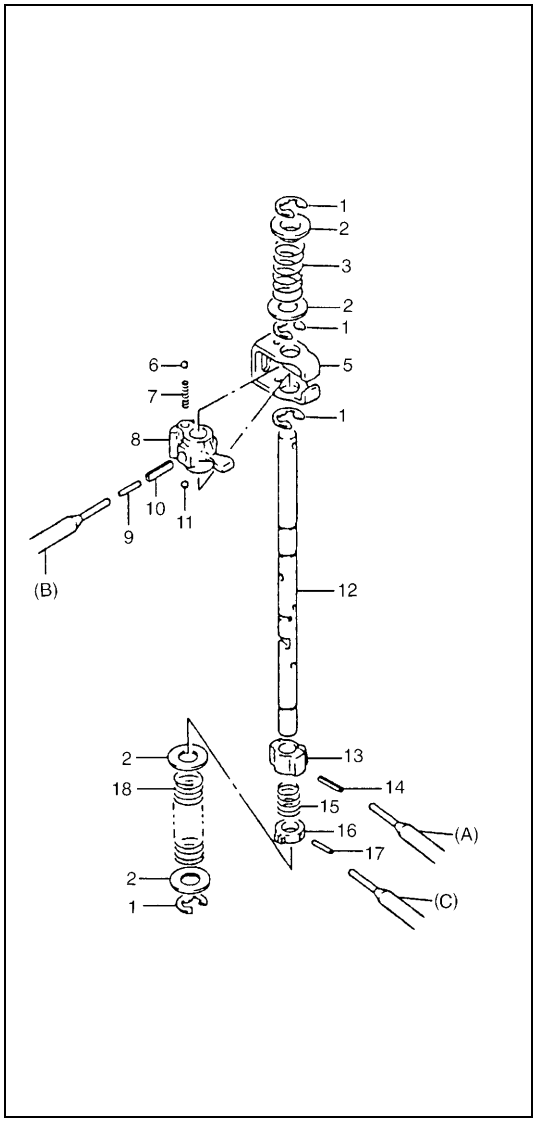

1) Push spring pins out using specified spring pin removers as shown bellow.

Special tool
(A) : 09922-85811 (4.5 mm)
(B) : 09925-78210 (6.0 mm)
(C) : 2.8 – 3.0 mm (0.11 – 0.12 in.) Commercially available spring pin remover

2) Inspect component parts for wear, distortion or damage. If any detect is found, replace detective part with new one.

NOTE:

- **When driving in spring pins, prevent shaft from being bent by supporting it with wood block.**
- **Assemble 5th & reverse gear shift cam with its pit and spring pin aligned.**
- **Make sure to select an appropriate spring by identifying the painted colors to keep gear shifting performance as designed.**
  - **– Low speed select spring - No paint**
  - **– Reverse select spring - Pink**

1. E-ring	10. Spring pin
2. Washer	11. Ball
3. Reverse select spring	12. Gear shift & select shaft
4. Blank	13. 5th & reverse gear shift cam
5. Gear shift interlock plate	14. Spring pin
6. Ball	15. Cam guide return spring
7. Gear shift interlock spring	16. 5th & reverse gear shift cam guide
8. Gear shift & select lever	17. Spring pin
9. Spring pin	18. Low speed select spring

High Speed and Low Speed Gear Shift Shafts Inspection

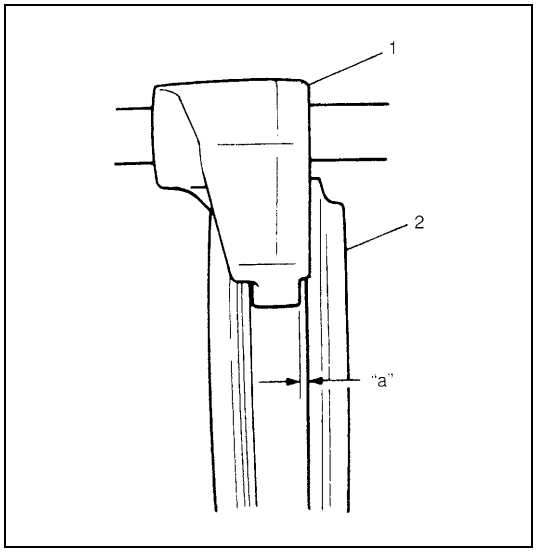

1) Using feeler gauge, check clearance between fork (1) and sleeve (2) and replace those parts if it exceeds limit below.

NOTE:

For correct judgement of parts replacement, carefully inspect contact portion of fork and sleeve.

Clearance between fork and sleeve
Service limit "a" : 1.0 mm (0.039 in.)

2) Insert each gear shift shaft into case and check that it moves smoothly. If it doesn't, correct by using oilstone, reamer or the like.

5th & Reverse Gear Shifter

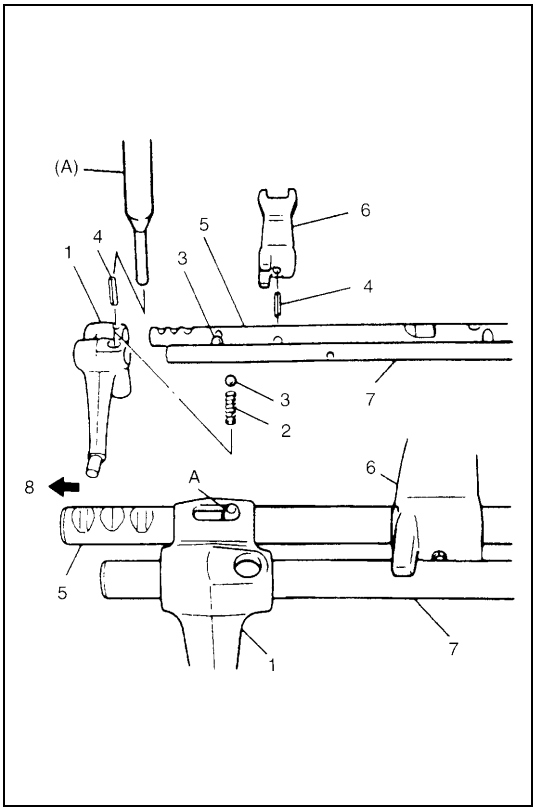

1) Disassemble component parts by using special tool and hammer.

Special tool
(A) : 09922-85811

2) Replace or correct parts as required and assemble shafts making sure that component parts are in proper order as shown in figure.

NOTE:

- **Distinguish reverse gear shift arm spring (Blue) (2) from low speed locating spring (Yellow).**
- **Install 2 steel balls (3) in reverse gear shift arm (1) without fail.**
- **Drive in spring pin for reverse shift arm facing slit A toward front.**

1. Reverse gear shift arm	6. 5th & reverse gear shift yoke
2. Reverse gear shift arm spring (Blue)	7. 5th & reverse gear shift guide shaft
3. Steel ball	8. 5th gear side
4. Spring pin	A: Face pin slit toward 5thn gear side
5. 5th & reverse gear shift shaft	

DIFFERENTIAL ASSEMBLY

DISASSEMBLY

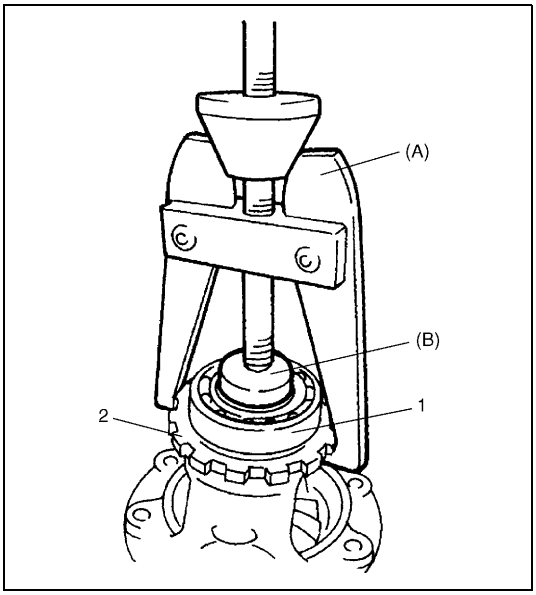

1) Using special tools, remove right bearing (1) and sensor rotor (2).

Special tool
(A) : 09913-60910
(B) : 09925-88210

2) Remove left bearing in the same manner.

3) Support differential case with soft jawed vise and remove final gear bolts then take out final gear.

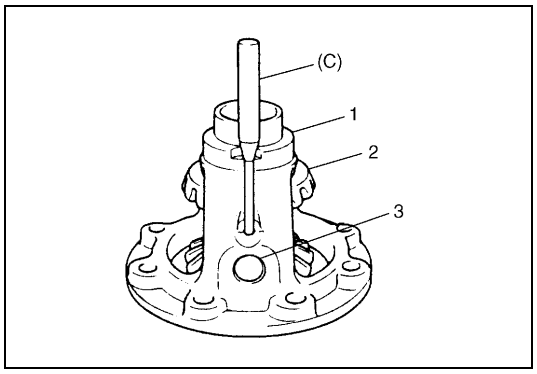

4) Using special tool and hammer, drive out differential pinion shaft pin and then disassemble component parts.

Special tool
(C) : 09922-85811

1.	Differential case
2.	Differential gear
3.	Differential pinion shaft

ADJUSTMENT AND REASSEMBLY

Judging from abnormality noted before disassembly and what is found through visual check of component parts after disassembly, prepare replacing parts and proceed to reassembly. Make sure that all parts are clean.

1) Assemble differential gear and measure thrust play of differential gear as follows.

Differential gear thrust play
: 0.03 – 0.31 mm (0.001 – 0.012 in.)

Left side

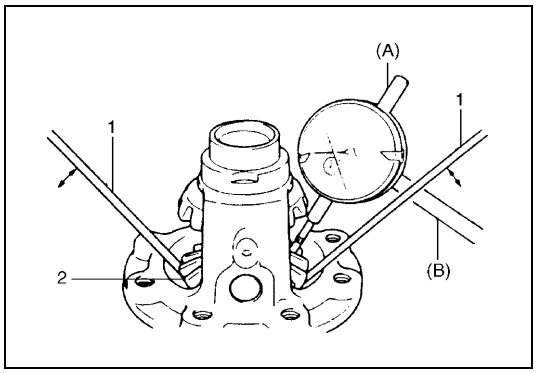

- Hold differential assembly with soft jawed vise and apply measuring tip of dial gauge to top surface of gear.
- Using 2 screwdrivers (1), move gear (2) up and down and read movement of dial gauge pointer.

Special tool
(A) : 09900-20606
(B) : 09900-20701

Right side

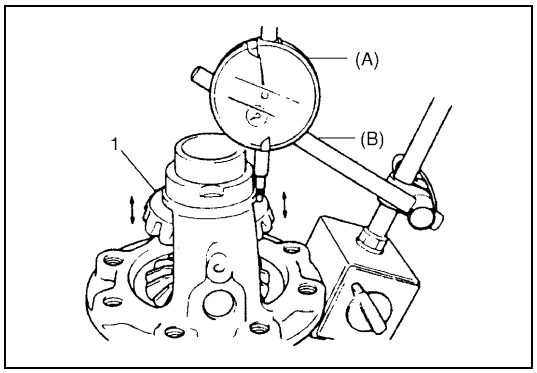

- Using similar procedure to the above, set dial gauge tip to gear (1) shoulder.
- Move gear up and down by hand and read dial gauge.

Special tool
(A) : 09900-20606
(B) : 09900-20701

2) If thrust play is out of specification, select suitable thrust washer from among the following available size, install it and check again that specified gear play is obtained.

Available thrust washer thickness
0.9, 0.95, 1.0, 1.05, 1.1, 1.15 and 1.2 mm
(0.035, 0.037, 0.039, 0.041, 0.043, 0.045, and 0.047 in.)

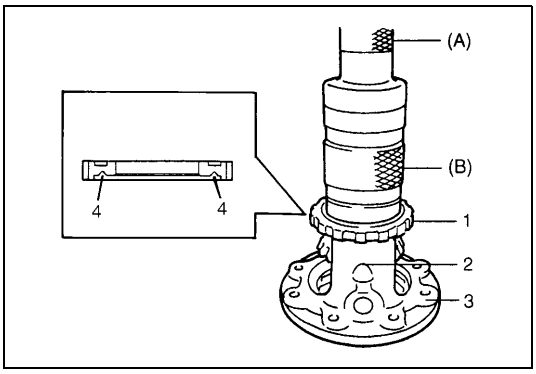

3) Drive in new differential pinion shaft pin (2) till the depth from differential case (3) surface is about 1 mm (0.04 in.).
4) Press-fit new sensor rotor (1) with groove (4) side downward as shown by using special tools and copper hammer.

Special tool
(A) : 09913-75510
(B) : 09940-54910

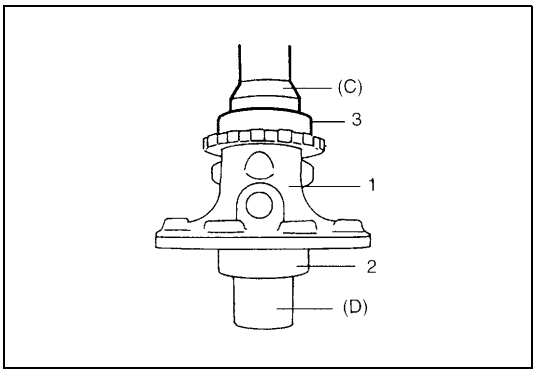

5) Press-fit left bearing by using special tools and copper hammer.
6) Support differential assembly (1) as illustrated so as to left bearing (2) is floating, and then press-fit right bearing (3) like left bearing in Step 5).

Special tool
(C) : 09951-76010
(D) : 09951-16060

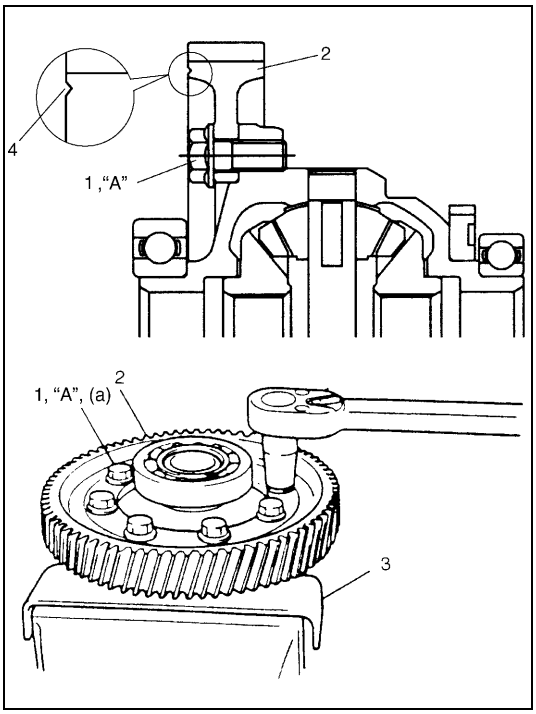

7) Hold differential assembly with soft jawed vise (3), install final gear (2) as shown in figure and then tighten bolts (1) with thread lock cement applied to specified torque.

NOTE:
Make sure to install final gear in correct installing direction.

CAUTION:
Use of any other bolts than specified ones is prohibited.

"A" : Thread lock cement 99000-32110

Tightening torque
Final gear bolts (a) : 90 N·m (9.0 kg-m, 65.0 lb-ft)

4. Groove

UNIT ASSEMBLY

DIFFERENTIAL TO LEFT CASE

ASSEMBLY

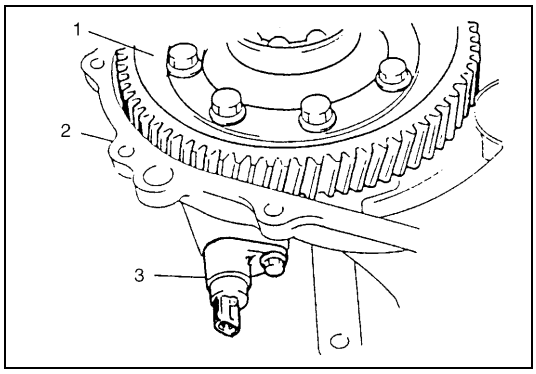

1) Install differential assembly (1) into right case (2).
2) Insert VSS (3) with grease applied to its O-ring, then tighten it with bolt.

Grease 99000-25010

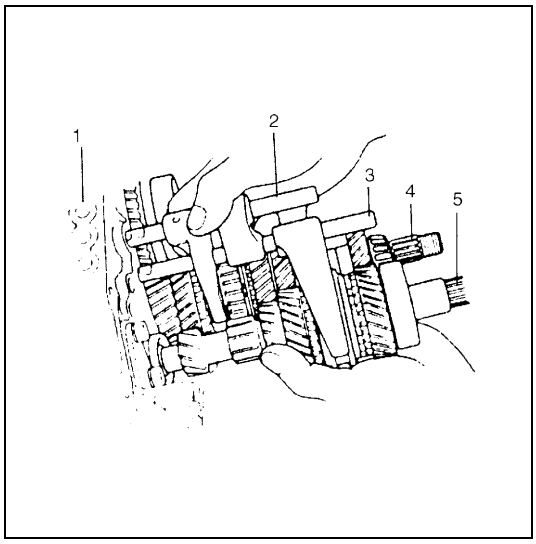

3) Join input shaft (5), countershaft (4), low speed gear shift shaft (2) and high speed gear shift shaft (3) assemblies all together, then install them into right case (1).

CAUTION:
Take care not to damage oil seal lip by input shaft, or oil leakage may take place.

NOTE:

- **Input shaft right bearing on shaft can be installed into right case by tapping shaft with plastic hammer.**
- **Check to make sure that counter shaft is engaged with final gear while installing.**

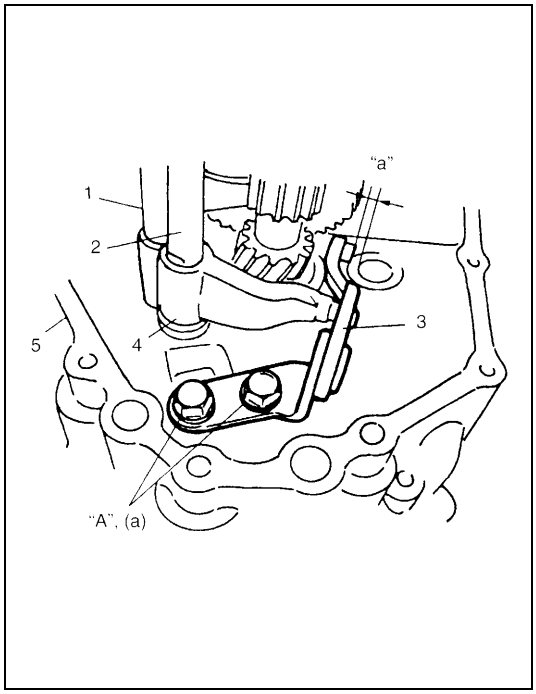

4) Install 5th & reverse gear shift shaft (1) with 5th & reverse gear shift guide shaft (2) into right case (5). Reverse gear shift arm (4) has to be joined with reverse gear shift lever (3) at the same time.
5) Place reverse gear shift lever, fasten it with bolts after applying thread lock cement.

"A" : Thread lock cement 99000-32110

Tightening torque
Revers gear shift lever bolts
(a) : 23 N·m (2.3 kg-m, 17.0 lb-ft)

NOTE:

- **When installing reverse gear shift lever, set it as the following specification.**

Distance between lever end and shaft bore
"a" : 5 mm (0.2 in.)

NOTE:

- **Distance "a" can be measured by installing reverse gear shaft provisionally.**
- **When "a" is 5 mm (0.2 in.), clearance between reverse idler gear groove and shift lever end will be 1 mm (0.04 in.).**

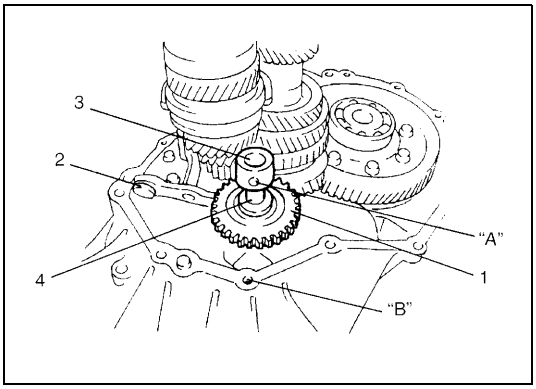

6) Make reverse idler gear (1) with reverse gear shift lever (2), insert reverse gear shaft (3) into case through idler gear and then align "A" in shift with "B" in case.

NOTE:

- **Make sure that washer (4) has been installed in shaft at above the gear.**
- **Check to confirm that reverse gear shift lever end has clearance 1 mm (0.04 in.) to idler gear groove.**

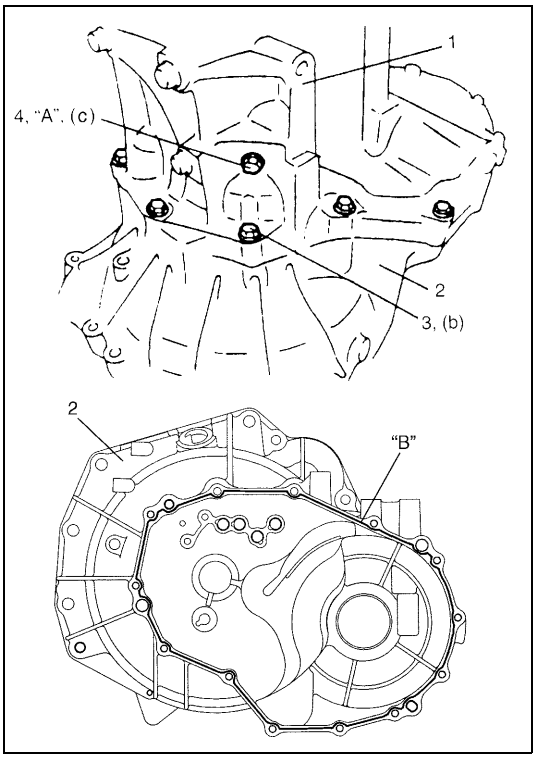

7) Clean mating surfaces of both right and left cases, apply sealant to right case (2) by using a nozzle as shown in figure by such amount that its section is 1.5mm (0.059 in.) in diameter then mate it with left case (1).

"B" : Sealant 99000-31110

8) Tighten case bolts (3) from left case side to specified torque.

Tightening torque
Transmission case bolts (b) : 19 N·m (1.9 kg-m, 14.0 lb-ft)

9) Install reverse shaft bolt (4) to which thread lock cement have been applied with aluminum washer and tighten it.

"A" : Thread lock cement 99000-32110

Tightening torque
Reverse shaft bolt (c) : 23 N·m (2.3 kg-m, 17.0 lb-ft)

10) Install another case bolts from clutch housing side and tighten them to specification.

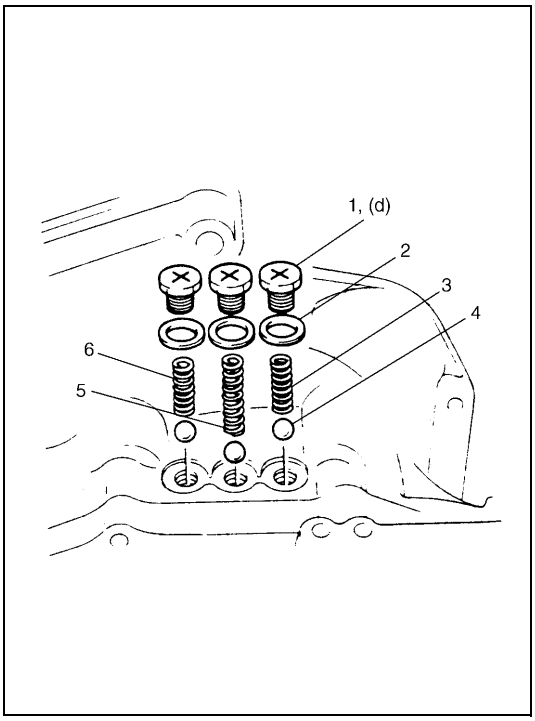

11) Check locating spring for deterioration and replace with new one as necessary.

Locating spring free length
For Low speed (3) and 5th & reverse (6)
Standard : 26.1 mm (1.028 in.)
Service Limit : 25.0 mm (0.984 in.)
For High speed (5)
Standard : 40.1 mm (1.579 in.)
Service Limit : 39.0 mm (1.535 in.)

12) Install steel ball (4) and locating spring for respective gear shift shaft and tighten bolt (1) to which sealant have been applied to its thread part.

Sealant 99000-31110

Tightening torque
Locating spring bolts (d) : 13 N·m (1.3 kg-m, 9.5 lb-ft)

2. Washer

FIFTH GEARS

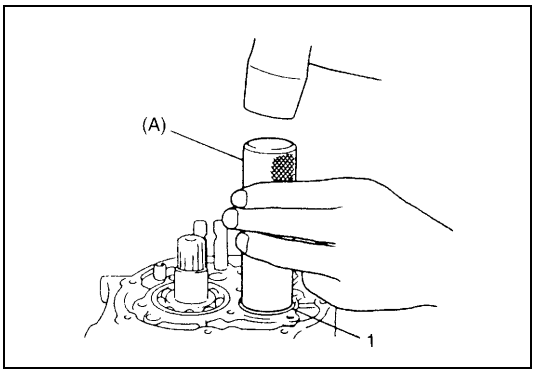

1) To seat countershaft left bearing cup (1) to bearing cone, tap cup by using special tool and plastic hammer.

Special tool
(A) : 09913-84510

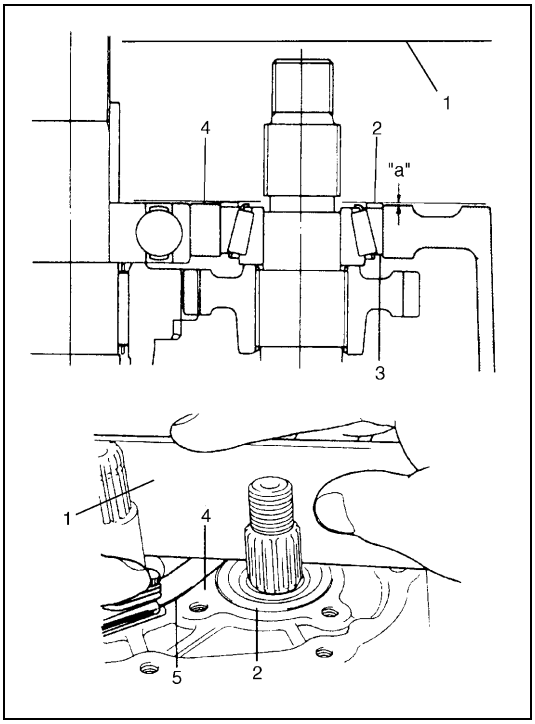

2) Put a shim (2) on bearing cup (3) provisionally, place straight edge (1) over it and compress it by hand through straight edge, and then measure “a” (Clearance between case surface (4) and straight edge) by using feeler gauge (5).

Clearance between case surface and straight edge
“a” : 0.13 – 0.17 mm (0.0051 – 0.0067 in.)
(Shim protrusion)

3) By repeating above step, select a suitable shim which adjusts clearance “a” to specification and put it on bearing cup.

NOTE:
Insert 0.15 mm (0.0059 in.) feeler to know whether or not a shim fulfills specification quickly.

Available shim thickness
0.40, 0.45, 0.50, 0.55, 0.6, 0.65,0.7, 0.75, 0.8, 0.85, 0.9, 0.95, 1.0,1.05, 1.1 and 1.15 mm (0.015, 0.017, 0.019, 0.021, 0.023,0.025, 0.027, 0.029, 0.031, 0.033,0.035, 0.037, 0.039, 0.041, 0.043 and 0.045 in.)

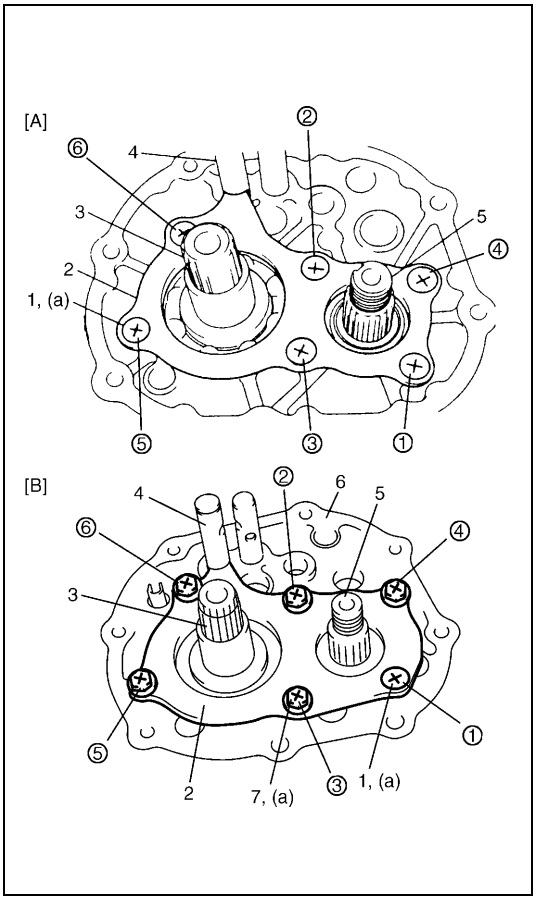

CAUTION:
Do not reuse left case plate screw(s) (1) (and bolts (7)). Be sure to use new adhesive pre-coated screw(s) (and new adhesive pre-coated bolts). Otherwise, screw(s) (and/or bolts) may loosen.

4) Place left case plate (2) inserting its end in groove of shift guide shaft (4) and tighten new adhesive pre-coated screw(s) (1) (and new adhesive per-coated bolts (7) temporarily with less than specified toque.
5) Tighten new screw(s) (and new bolts) to specified torque finally in the order of circled numbers (①→②→③→④→⑤→⑥) shown in figure.

NOTE:

After tightening screw(s) (and bolts), make sure that countershaft (5) can be rotated by hand feeling certain load.

Tightening torque
Left case plate screw(s) (and bolts)
(a) : 11 N·m (1.1 kg-m, 8.0 lb-ft)

[A]: In case 6 screws are used	3. Input shaft
[B]: In case 1 screw and 5 bolts are used	6. Transaxle left case

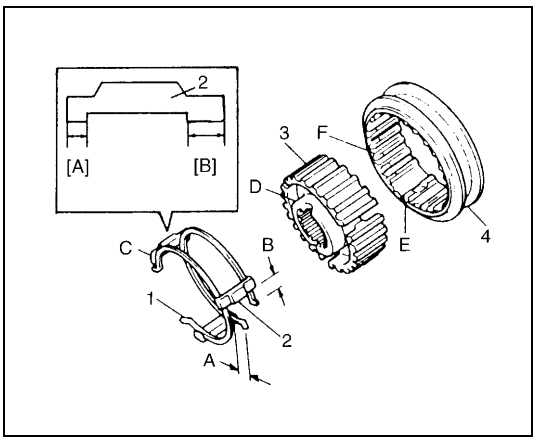

6) Assemble 5th speed synchronizer sleeve (4) and hub (3) with keys (2) and springs (1).

NOTE:

Short side C in keys, long flange D in hub and chamfered spline F in sleeve should face inward (5th gear side).

Synchronizer key installation position
: A = B

[A] : Short side C	D : Long flange (Inward)
[B] : Long side	E : Key way
C : Short side (Inward)	F : Chamfered spline (Inward)

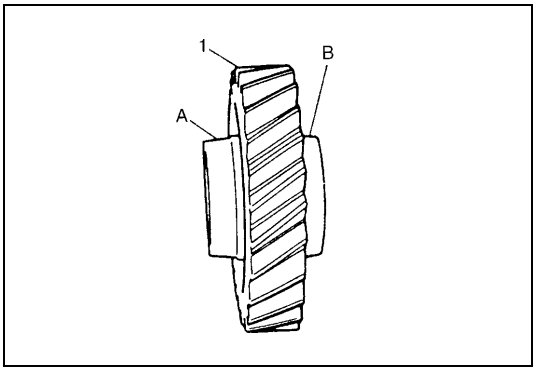

7) Install 5th gear (1) to counter shaft facing machined boss A inward.

A : Machined boss (Inside)
B : No machining (Outside)

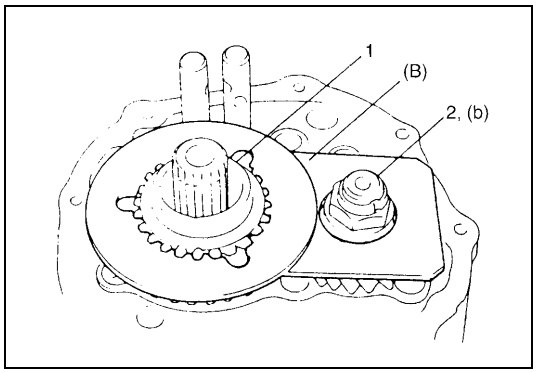

8) Install needle bearing of separated steel cage type to input shaft, apply oil then install 5th gear (1) and special tool to stop shaft rotation.

Special tool
(B) : 09927-76010

9) Install new countershaft nut (2) and tighten it to specification.

Tightening torque
Countershaft nut (b) : 60 N·m (6.0 kg-m, 43.5 lb-ft)

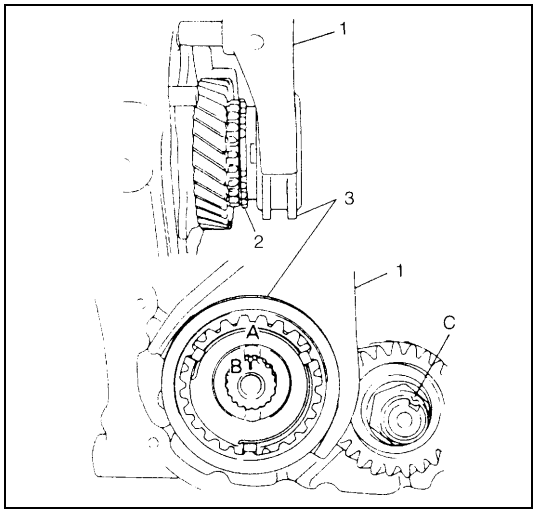

10) Remove special tool, then caulk nut at C with caulking tool and hammer.
11) Install synchronizer ring (2).
12) Fit 5th gear shift fork (1) to sleeve & hub assembly (3) and install them into input shaft, shift shaft and shift guide shaft at once aligning hub oil groove A with shaft mark B.

NOTE:

Long flange of hub faces inward (gear side).

A :	Oil groove (Align with B)
B :	Punch mark
C :	Caulking

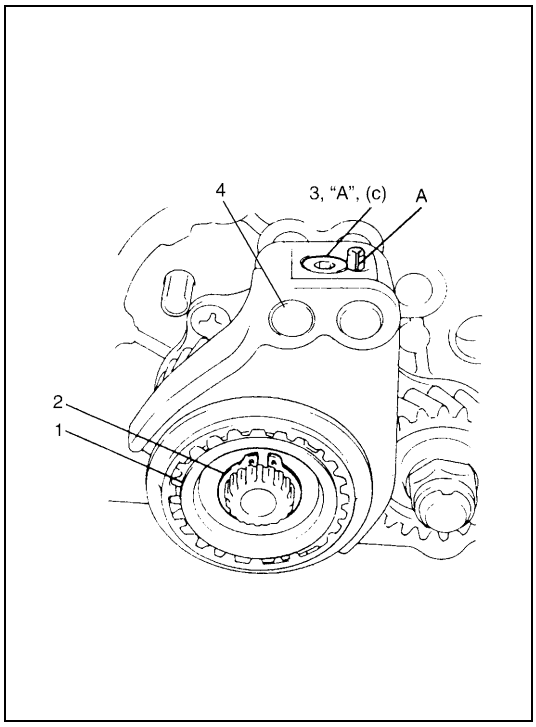

13) Drive in spring pin facing its slit A outward.
14) If equipped, install steel ball, tighten shift fork plug (3) to which thread lock cement have been applied.

"A" : Thread lock 1322 99000-32110

Tightening torque
5th shift fork plug (c) : 10 N·m (1.0 kg-m, 7.5 lb-ft)

15) Fit hub plate (1) and fix it with circlip (2).
16) If equipped, install circlip (4) to the end of 5th & reverse gear shift guide shaft.

CAUTION:

- **Coat shift fork plug with thread lock cement reasonably. If it is done to much, excess may interfere in ball movement and cause hard shift to 5th speed.**
- **Make sure circlip is installed in shaft groove securely.**

A :	Pin slit (Face outward)

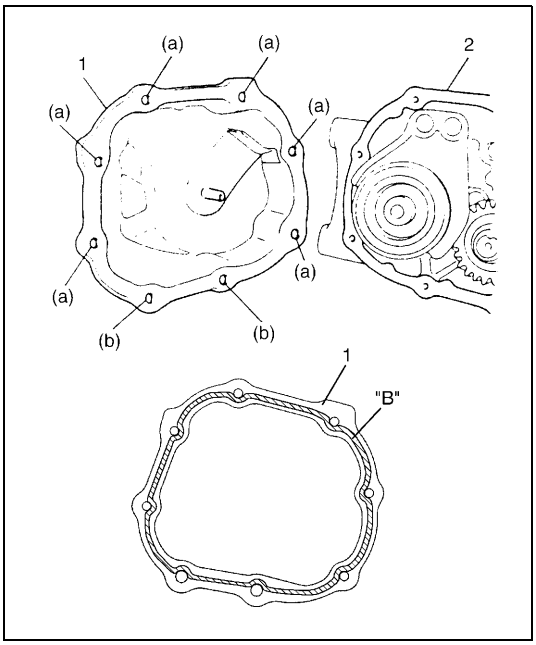

17) Clean mating surface of both left case (2) and side cover (1), apply sealant to side cover (1) by using a nozzle as shown in figure by such amount that its section is 1.5mm (0.059 in.) in diameter, mate it with left case and then tighten bolts.

"B" : Sealant 99000-31110

Tightening torque
Side cover No.1 bolts (a) : 10 N·m (1.0 kg-m, 7.5 lb-ft)
Side cover No.2 bolts (b) : 23 N·m (2.3 kg-m, 17.0 lb-ft)

GEAR SHIFT AND SELECT SHAFT ASSEMBLY

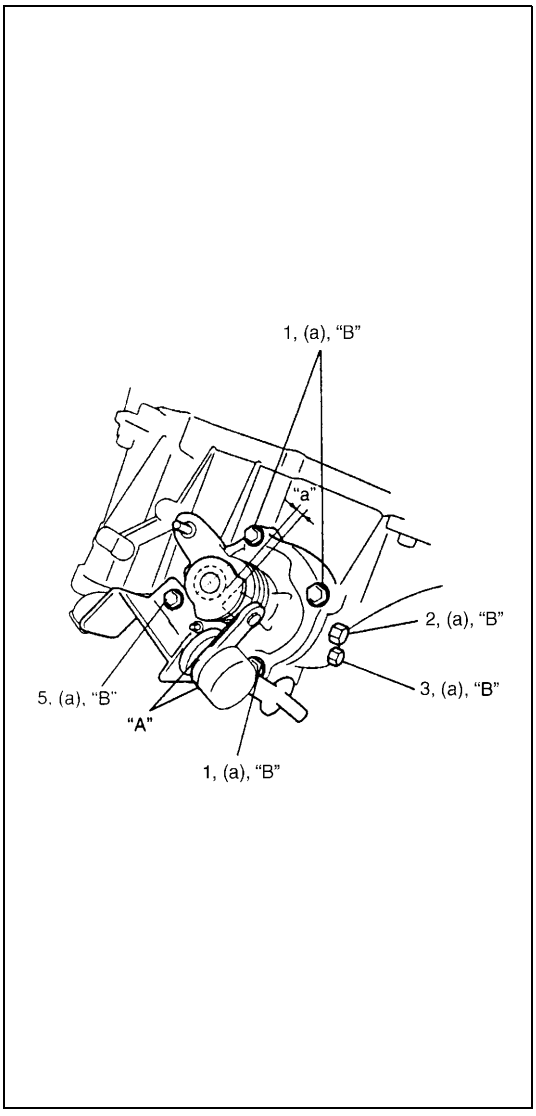

1) Clean mating surface of guide case.
2) Apply grease to select lever shaft bush and select lever boss, and install gear shift and select shaft assembly with new gasket into transmission.

"A" : Grease 99000-25010

3) Apply sealant to gear shift guide case No. 2 bolt (5). Tighten gear shift guide case No. 1 bolts (1) and No. 2 bolt (5) to specified torque at the position that clearance "a" is within 1 - 1.5 mm (0.04 - 0.06 in.).

Tightening torque
Guide case bolts (a) : 23 N·m (2.3 kg-m, 17.0 lb-ft)

4) Install washer and gear shift interlock bolt (2) to which sealant have been applied and them tighten it to specified torque.

"B" : Sealant 99000-31110

Tightening torque
Gear shift inter lock bolt (a) : 23 N·m (2.3 kg-m, 17.0 lb-ft)

5) Install washer and 5th to reverse interlock guide bolt (3) to which sealant have been applied and then tighten it to specified torque.

"B" : Sealant 99000-31110

Tightening torque
5th to reverse interlock guide bolt (a) : 23 N·m (2.3 kg-m, 17.0 lb-ft)

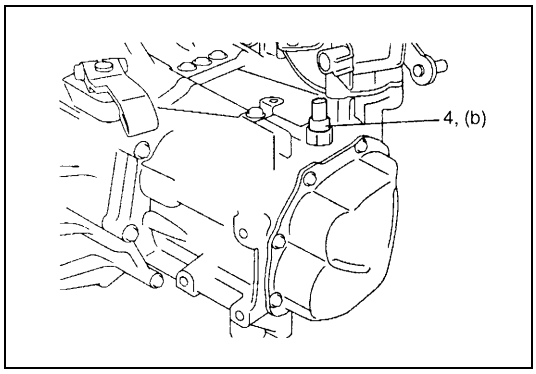

6) Tighten backup lamp switch (1) to specified torque.

Tightening torque
Backup lamp switch (b) : 19 N·m (1.9 kg-m, 14.0 lb-ft)

7) Check input shaft for rotation in each gear position.
8) Also confirm function of back up light switch in reverse position by using ohmmeter.

TIGHTENING TORQUE SPECIFICATION

Fastening part	Tightening torque		
	N•m	kg-m	lb-ft
Transmission oil level/filler and drain plugs	21	2.1	15.5
Oil gutter bolt	10	1.0	7.5
Final gear bolts	90	9.0	65.0
Reverse gear shift lever bolts	23	2.3	17.0
Transmission case bolts	19	1.9	14.0
Reverse shaft bolt	23	2.3	17.0
Locating spring bolts	13	1.3	9.5
Left case plate screw	9	0.9	6.5
Countershaft nut	60	6.0	43.5
5th shift fork plug	10	1.0	7.5
Side cover No.1 bolts	10	1.0	7.5
Side cover No.2 bolts	23	2.3	17.0
Guide case bolts	23	2.3	17.0
Gear shift interlock bolt	23	2.3	17.0
5th to reverse interlock guide bolt	23	2.3	17.0
Backup lamp switch	19	1.9	14.0

REQUIRED SERVICE MATERIAL

Material	Recommended SUZUKI product (Part Number)	Use
Lithium grease	SUZUKI SUPER GREASE A (99000-25010)	• Oil seal lips • O-rings • Select lever boss • Select lever shaft bush • Gear shift control cable end
Sealant	SUZUKI BOND NO.1215 (99000-31110)	• Oil drain plug and filler/level plug • Locating spring bolts • Mating surface of transmission case • Mating surface of side cover • Gear shift interlock bolt • 5th to reverse interlock guide bolt
Thread lock cement	THREAD LOCK 1322 (99000-32110)	• Reverse gear shift lever bolts • Oil gutter bolt • Shift fork plug • Reverse shaft bolt • Final gear bolts

SPECIAL TOOL

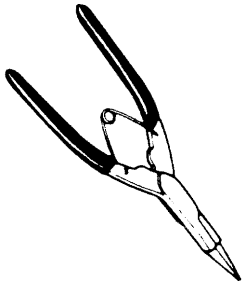 09900-06107 Snap ring pliers (Opening type)	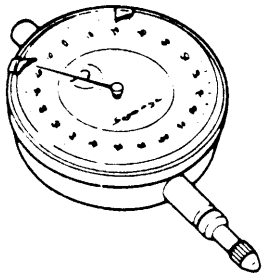 09900-20606 Dial gauge	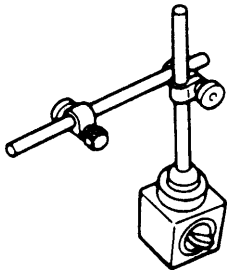 09900-20701 Magnetic stand	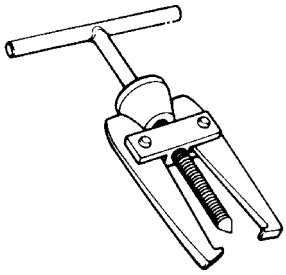 09913-60910 Bearing puller
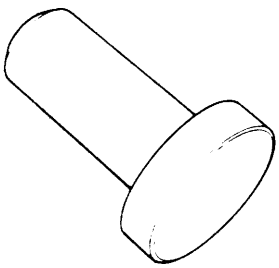 09913-75510 Bearing installer	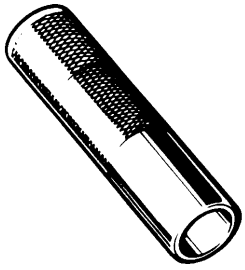 09913-80112 Bearing installer	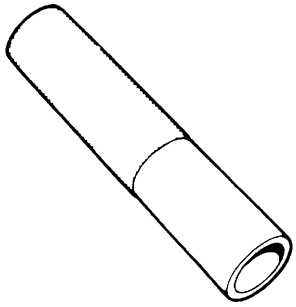 09913-84510 Bearing installer	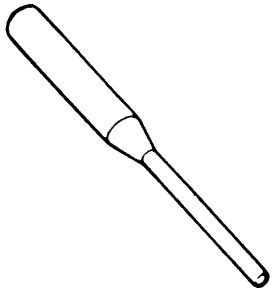 09922-85811 Spring pin remover 4.5 mm

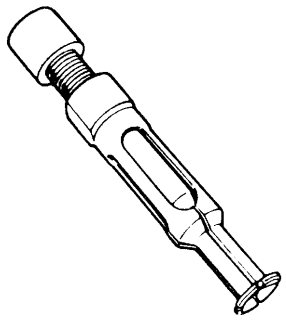 09923-74510 Bearing remover	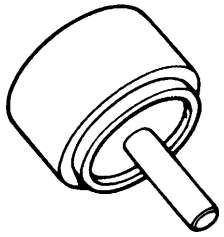 09923-78210 Bearing installer	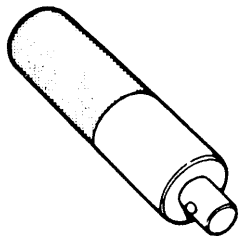 09924-74510 Installer attachment	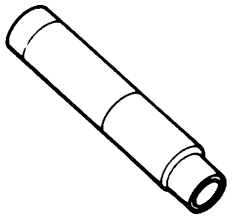 09925-18011 Bearing installer
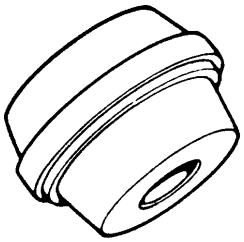 09925-68210 Bearing outer race installer	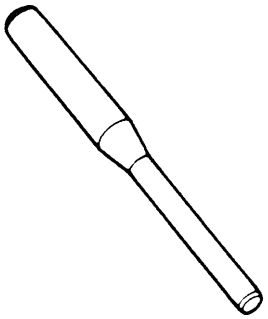 09925-78210 Spring pin remover 6 mm	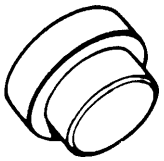 09925-88210 Bearing puller attachment	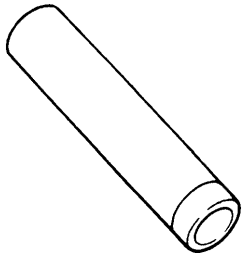 09925-98221 Bearing installer
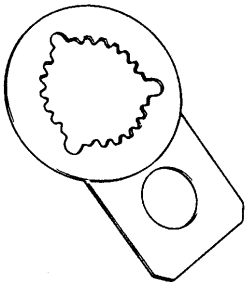 09927-76010 Gear holder	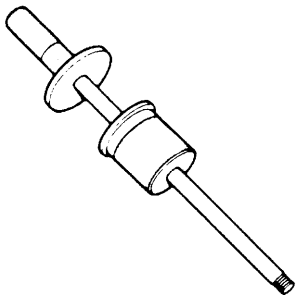 09930-30104 Sliding shaft	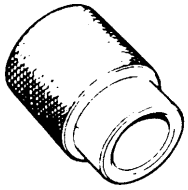 09940-53111 Bearing installer	 09940-54910 Sensor rotor installer
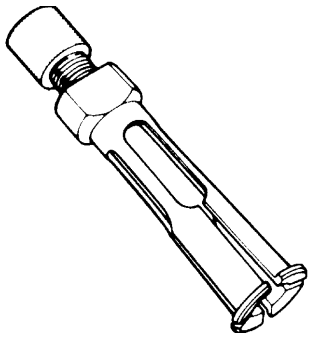 09941-64511 Bearing remover	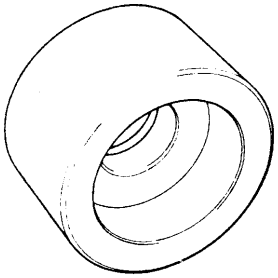 09951-16060 Bush remover	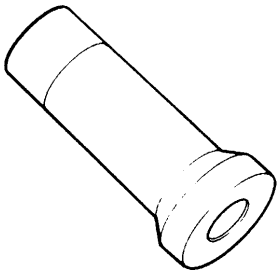 09951-76010 Bearing installer	

SECTION 7B

AUTOMATIC TRANSMISSION (4 A/T)

WARNING:

For vehicles equipped with Supplemental Restraint (Air Bag) System :

- **Service on and around the air bag system components or wiring must be performed only by an authorized SUZUKI dealer. Refer to "Air Bag System Components and Wiring Location View" under "General Description" in air bag system section in order to confirm whether you are performing service on or near the air bag system components or wiring. Please observe all WARNINGS and "Service Precautions" under "On-Vehicle Service" in air bag system section before performing service on or around the air bag system components or wiring. Failure to follow WARNINGS could result in unintentional activation of the system or could render the system inoperative. Either of these two conditions may result in severe injury.**
- **Technical service work must be started at least 90 seconds after the ignition switch is turned to the "LOCK" position and the negative cable is disconnected from the battery. Otherwise, the system may be activated by reserve energy in the Sensing and Diagnostic Module (SDM).**

CONTENTS

GENERAL DESCRIPTION 7B-3
- ELECTRONIC SHIFT CONTROL SYSTEM . 7B-6
  - TRANSMISSION CONTROL MODULE (TCM) 7B-7
  - FAIL SAFE FUNCTION 7B-8
  - CHANGE MECHANISM 7B-10
  - AUTOMATIC GEAR SHIFT DIAGRAM ... 7B-11

DIAGNOSIS 7B-13
- AUTOMATIC TRANSMISSION DIAGNOSTIC FLOW TABLE 7B-13
- TROUBLE DIAGNOSIS TABLE 7B-18
  - STALL TEST 7B-20
  - TIME LAG TEST 7B-21
  - LINE PRESSURE TEST 7B-22
  - ENGINE BRAKE TEST 7B-23
  - "P" RANGE TEST 7B-23
- ELECTRONIC CONTROL SYSTEM DIAGNOSIS 7B-24
  - PRECAUTIONS IN DIAGNOSING TROUBLES 7B-24
  - DTC CHECK 7B-25
  - DTC CLEARANCE 7B-27
  - DTC TABLE 7B-28
  - TCM POWER AND GROUND CIRCUIT CHECK 7B-30
  - DTC P0715 (DTC NO.14) INPUT/ TURBINE SPEED SENSOR CIRCUIT MALFUNCTION 7B-31
  - DTC P0730 (DTC NO. 18) INCORRECT GEAR RATIO 7B-33
  - DTC P0753 (DTC NO.21/22) SHIFT SOLENOID-A (NO.1) ELECTRICAL 7B-35
  - DTC P0758 (DTC NO.23/24) SHIFT SOLENOID-B (NO.2) ELECTRICAL 7B-35
  - DTC P0743 (DTC NO.25/26) TCC (LOCK-UP CLUTCH) SYSTEM ELECTRICAL 7B-35
  - DTC P0741 (DTC NO.29) TCC (LOCK-UP) SOLENOID PERFORMANCE OR STUCK OFF 7B-37
  - DTC P0720 (DTC NO. 31) OUTPUT SHAFT SPEED SENSOR CIRCUIT MALFUNCTION 7B-38
  - DTC P1700 (DTC NO.32/33) THROTTLE POSITION SIGNAL INPUT MALFUNCTION 7B-41
  - DTC P0705 (DTC NO.34) TRANSMISSION RANGE SENSOR (SWITCH) CIRCUIT MALFUNCTION 7B-43
  - DTC P0725 (DTC NO.35) ENGINE SPEED INPUT CIRCUIT MALFUNCTION 7B-45
  - DTC P0710 (DTC No.36/38) TRANSMISSION TEMPERATURE SENSOR CIRCUIT MALFUNCTION 7B-47
  - DTC P0763 (DTC NO.43) SHIFT SOLENOID-C (NO.3) ELECTRICAL 7B-49
  - DTC P0768 (DTC NO.45) SHIFT SOLENOID-B (NO.4) ELECTRICAL 7B-49
  - DTC P0773 (DTC NO.48) SHIFT SOLENOID-E (NO.5) ELECTRICAL 7B-49
  - DTC P1709 (DTC NO.51) ENGINE COOLANT TEMPERATURE/BAROMETRIC PRESSURE SIGNAL CIRCUIT 7B-51

DTC P0702/P1702 (DTC No.52) TRANSMISSION CONTROL SYSTEM ELECTRICAL OR INTERNAL MALFUNCTION OF TCM 7B-52
INSPECTION OF TCM AND ITS CIRCUITS 7B-53
ON-VEHICLE SERVICE 7B-55
MAINTENANCE SERVICE 7B-55
FLUID LEVEL AT NORMAL OPERATING TEMPERATURE 7B-55
FLUID LEVEL AT ROOM TEMPERATURE 7B-56
FLUID CHANGE 7B-56
SELECTOR LEVER 7B-57
TRANSMISSION RANGE SENSOR (SHIFT SWITCH) 7B-58
SELECTOR CABLE 7B-60
OUTPUT SHAFT SPEED SENSOR (A/T VSS) 7B-62
INPUT SHAFT SPEED SENSOR 7B-63
VEHICLE SPEED SENSOR (VSS) 7B-63
THROTTLE POSITION SENSOR 7B-63
ENGINE COOLANT TEMP. (ECT) SENSOR 7B-64
DROPPING RESISTOR 7B-64
O/D OFF SWITCH 7B-65
SHIFT SOLENOID VALVES AND TRANSMISSION TEMPERATURE SENSOR 7B-65
SHIFT SOLENOID VALVES 7B-66
TRANSMISSION TEMPERATURE SENSOR 7B-66
DIFFERENTIAL SIDE OIL SEAL 7B-68
TRANSMISSION CONTROL MODULE (TCM) 7B-69
LEARNING CONTROL INITIALIZATION 7B-70
BRAKE INTERLOCK SYSTEM (IF EQUIPPED) 7B-70
KEY INTERLOCK CABLE (IF EQUIPPED) 7B-72
TRANSMISSION UNIT REPAIR OVERHAUL 7B-75
DISMOUNTING 7B-76
REMOUNTING 7B-77
UNIT DISASSEMBLY 7B-78
DISASSEMBLY/ASSEMBLY OF SUBASSEMBLY 7B-88
OIL PUMP 7B-88
FRONT CLUTCH (C2 CLUTCH) 7B-91
REAR CLUTCH (C1 CLUTCH) 7B-95
DIRECT CLUTCH (C0 CLUTCH) 7B-100
PLANETARY SET 7B-104
VALVE BODY 7B-106
DIFFERENTIAL ASSEMBLY 7B-112
REAR COVER (O/D BRAKE PISTON ASSEMBLY) 7B-115
PLANETARY SUN GEAR NO.1 ASSEMBLY 7B-115
TORQUE CONVERTER HOUSING 7B-116
TRANSMISSION CASE 7B-117
UNIT ASSEMBLY 7B-118
TIGHTENING TORQUE SPECIFICATION .. 7B-136
SPECIAL TOOL 7B-137
REQUIRED SERVICE MATERIAL 7B-139

GENERAL DESCRIPTION

This automatic transmission is a full automatic type with 3-speed plus overdrive (O/D).
The torque converter is a 3-element, 1-step and 2-phase type equipped with lock-up mechanism. The gear shift device consists of 2 sets of planetary gear units, sets of 3 disc type clutches, 3sets of disc type brakes and one-way clutch. The gear shift is done by selecting one of 6 positions (“P”, “R”, “N”, “D”, “2” and “L”) by means of the select lever installed on the floor. On the shift knob, there is an overdrive (O/D) cut switch which allows shift-up to the overdrive mode and shift-down from the overdrive mode.

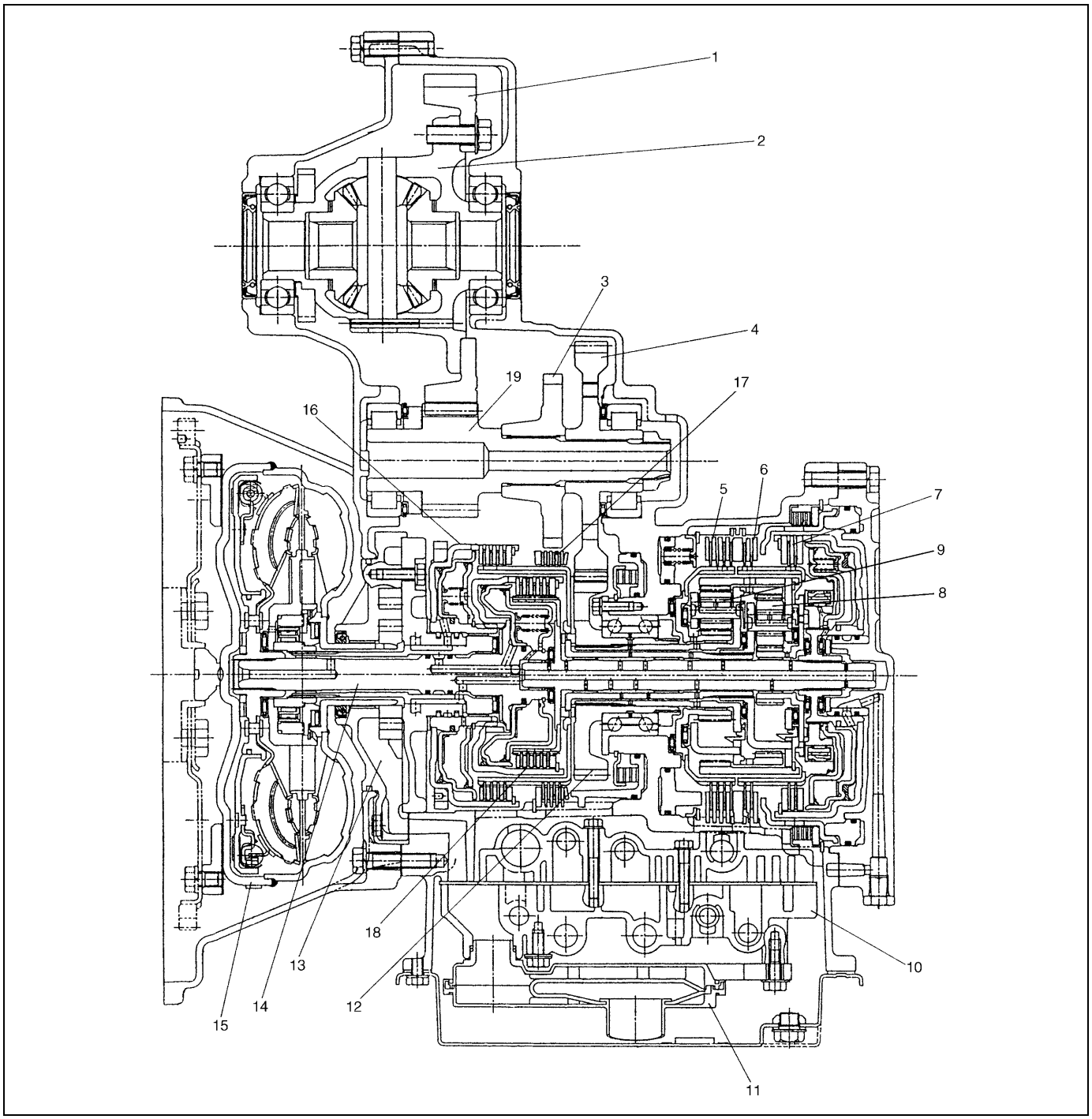

1. Final gear	6. Overdrive brake (B0)	11. Oil strainer	16. Front clutch (C2)
2. Differential gear assembly	7. Direct clutch (C0)	12. Counter drive gear (Reduction gear)	17. Reverse brake (B2)
3. Parking gear	8. Rear planetary gear	13. Oil pump	18. Rear clutch (C1)
4. Counter driven gear (Reduction gear)	9. Front planetary gear	14. Input shaft	19. Differential drive pinion shaft
5. 1st and 2nd brake (B1)	10. Valve body assembly	15. Torque converter	

Item			Specifications		
Torque converter	Type Stall torque ratio		3-element, 1-step, 2-phase type 1.65 –1.85		
Oil pump	Type Drive system		Internal gear type oil pump Engine driven		
Gear change device	Type		Forward 4-step, reverse 1-step planetary gear type		
	Shift position		“P” range “R” range “N” range “D” range (O/D ON) “D” range (O/D OFF) “2” range “L” range	Gear in neutral, output shaft fixed, engine start Reverse Gear in neutral, engine start Forward 1st ↔ 2nd ↔ 3rd ↔ 4th (O/D) automatic gear change Forward 1st ↔ 2nd ↔ 3rd ← 4th automatic gear change Forward 1st ↔ 2nd ← 3rd automatic gear change Forward 1st ← 2nd reduction, and fixed at 1st gear	
	Gear ratio	1st	2.962	Number of teeth	Front sun gear : 34 Rear sun gear : 21 Front pinion gear : 16 Rear pinion gear : 19 Front internal gear : 66 Rear internal gear : 59
		2nd	1.515		
		3rd	1.000		
		4th (overdrive gear)	0.737		
		Reverse (reverse gear	2.809		
	Control elements		Wet type multi-disc clutch ... 3 sets One-way clutch ... 1 set Wet type multi-disc brake ... 3 sets		
	Reduction gear ratio		1.209		
	Final gear ratio (Differential)		3.578 (for 2WD vehicle), 3.894 (for 4WD vehicle)		
Lubrication	Lubrication system		Force feed system by oil pump		
Cooling	Cooling system		Water-cooled		
Fluid used			Equivalent of DEXRON®-III or DEXRON®-IIE		

FUNCTIONS

NOTE:

For operation of each part, refer to TABLE OF COMPONENT OPERATION.

PART NAME	FUNCTION
Rear clutch	Meshes input shaft and rear sun gear through one-way clutch.
Front clutch	Meshes input shaft and front internal gear and rear carrier.
Overdrive brake	Fixes rear sun gear.
1st & 2nd brake	Fixes front sun gear.
Reverse brake	Fixes front internal gear and rear carrier.
Direct clutch	Meshes input shaft and rear sun gear.

TABLE OF COMPONENT OPERATION

Selector position / Gear position / Part		Rear clutch	Front clutch	Overdrive brake	1st & 2nd brake	Reverse brake	Direct clutch	One-way clutch
P		○	×	×	×	×	○	×
R		○	×	×	×	○	○	○
N		○	×	×	×	×	○	×
D	1st	○	×	×	○	×	×	○
	2nd	○	○	×	○	×	×	×
	3rd	○	○	×	×	×	○	×
	4th(O/D)	×	○	○	×	×	○	×
2	1st	○	×	×	○	×	×	○
	2nd	○	○	×	○	×	×	×
L	1st	○	×	×	○	×	○	○

○ :Operating × :Not operating

TABLE OF SHIFT SOLENOID VALVE OPERATION

Range & Gear	Shift Solenoid Valve				
	A (No.1)	B (No.2)	C (No.3)	D (No.4)	E (No.5)
[P] , [N]	×	×	×	○	×
1st gear of, [D] , [2]	○	×	×	○	○
1st gear of [L]	○	×	×	○	×
2nd gear	○	×	×	×	○
3rd gear	×	×	×	×	×
4th gear	×	○	○	×	×
[R]	×	×	×	×	×

○ :Operating × :Not operating

ELECTRONIC SHIFT CONTROL SYSTEM

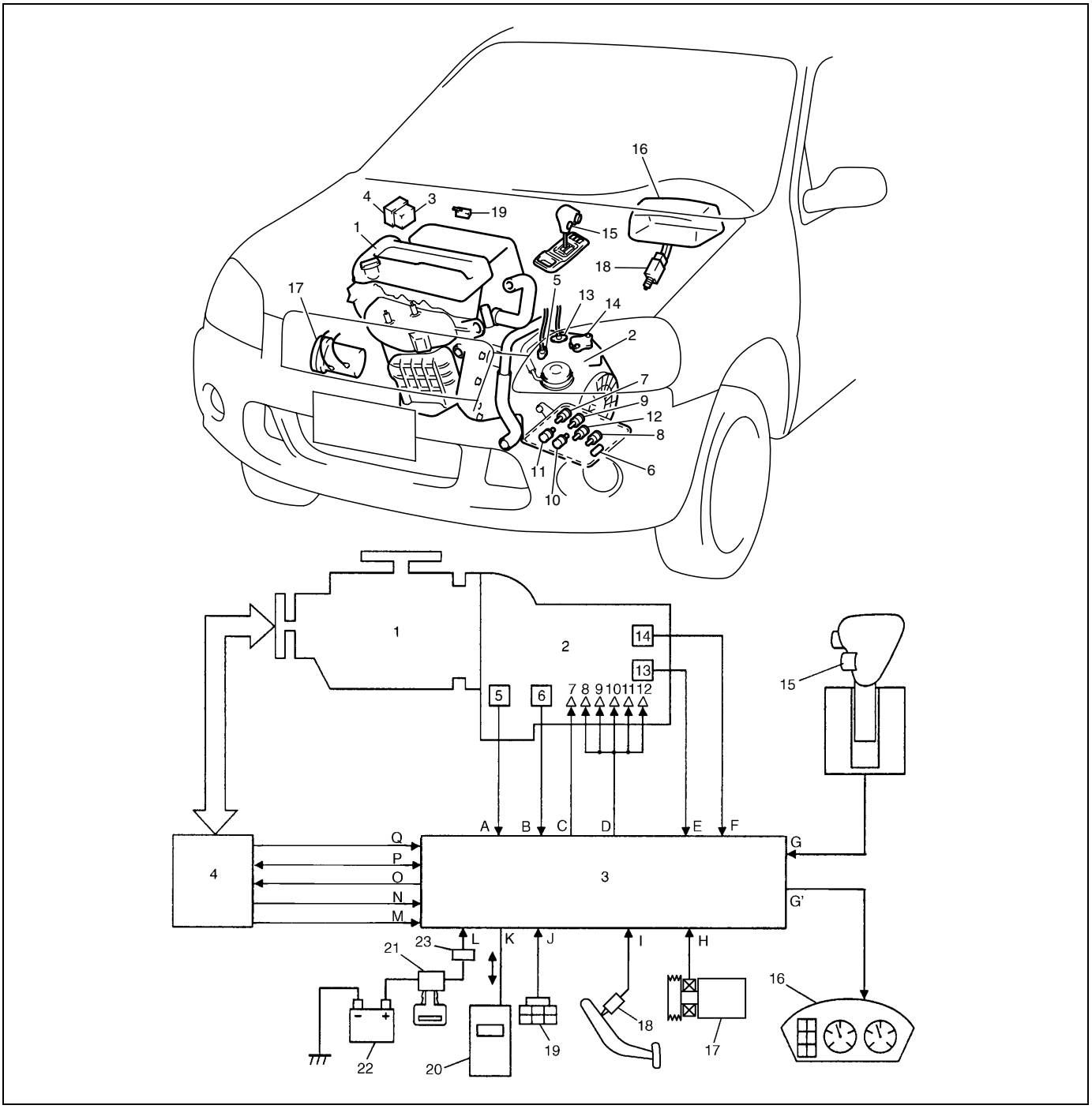

1. Engine	15. O/D off switch	F. Range signal
2. Transmission	16. Combination meter (O/D off lamp)	G. O/D off switch signal
3. TCM	17. A/C compressor	G'. O/D off lamp signal
4. ECM	18. Brake lamp switch	H. A/C clutch signal
5. Input shaft speed sensor (Turbine rev. sensor)	19. Monitor connector NO. 2	I. Brake signal
6. Transmission temp. sensor (A/T fluid temp. sensor)	20. Suzuki scan tool	J. Diagnosis switch signal
7. TCC solenoid (Lock-up solenoid)	21. Ignition switch	K. Serial communication with Suzuki scan tool
8. Shift solenoid-A (Shift solenoid No.1)	22. Battery	L. Power supply
9. Shift solenoid-B (Shift solenoid No.2)	23. A/T relay	M. Throttle opening signal
10. Shift solenoid-C (Shift solenoid No.3)	A. Turbine speed signal	N. Engine coolant temp./Barometric pressure signal
11. Shift solenoid-D (Shift solenoid No.4)	B. A/T fluid temp signal	O. Idle up signal
12. Shift solenoid-E (Shift solenoid No.5)	C. TCC (lock-up) control signal	P. A/T failure signal
13. Output shaft speed sensor (A/T VSS)	D. Shift control signal	Q. Engine speed (rev.) signal.
14. Transmission range sensor (Shift switch)	E. A/T output shaft speed signal	

TRANSMISSION CONTROL MODULE (TCM)

TCM is an electronic circuit component that controls gear shift, idle-up according to the signal from each sensor. Also it has learning control function for performing optimum control. It is a microcomputer consisting of an IC, transistor, diode, etc. It is installed behind glove box.

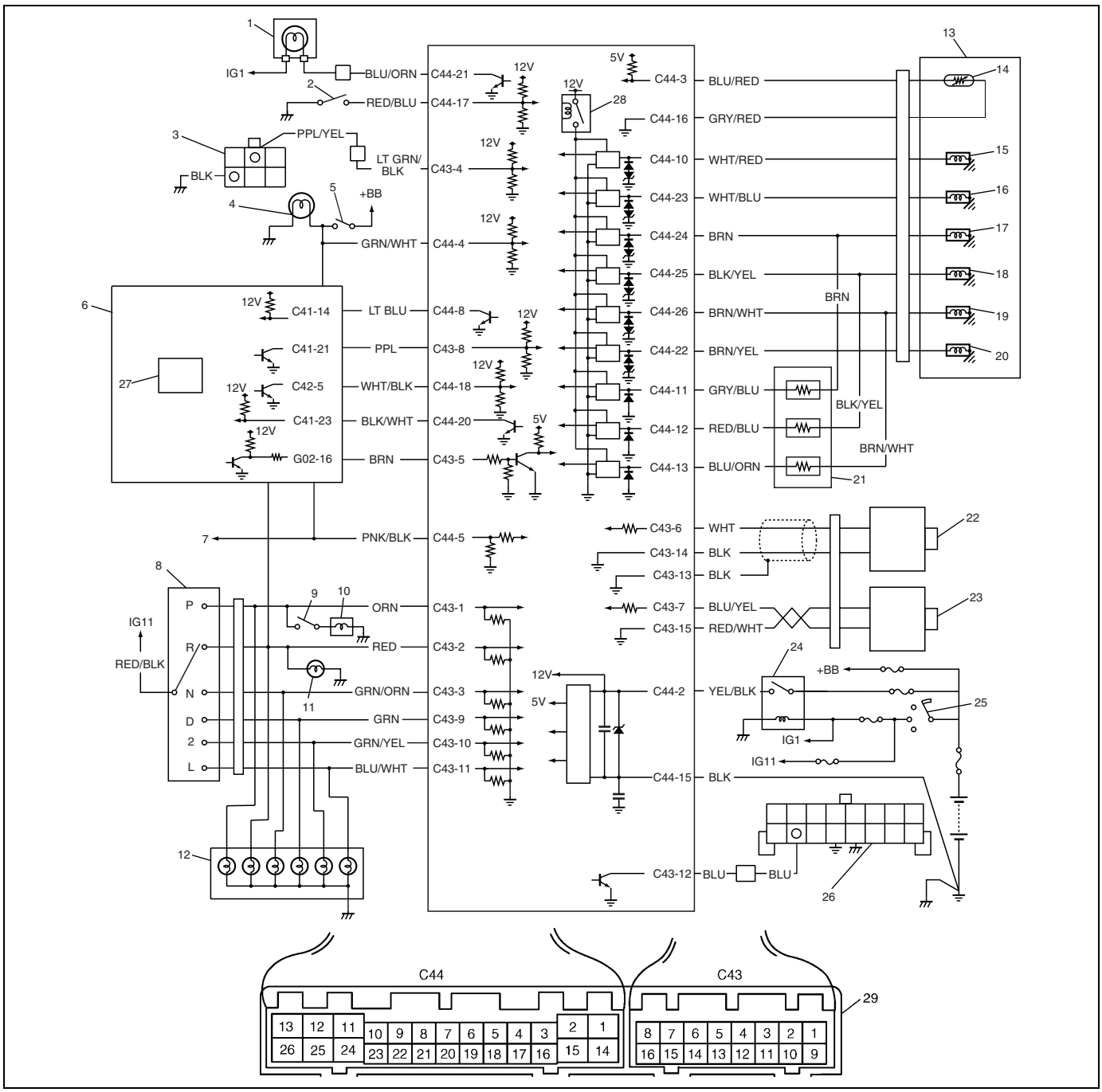

1. "O/D OFF" lamp (in combination meter)	11. Backup lamp	21. Dropping resistor
2. "O/D" off switch	12. Shift indicator (if equipped)	22. Output shaft speed sensor (A/T VSS)
3. Monitor connector No.2	13. A/T	23. Input shaft speed sensor (Turbine rev. sensor)
4. Brake lamp	14. Transmission temperature sensor (A/T fluid temp. sensor)	24. A/T power source relay
5. Brake lamp switch	15. Shift solenoid-A (Shift solenoid No.1)	25. Ignition switch
6. ECM	16. Shift solenoid-B (Shift solenoid No.2)	26. DLC
7. A/C clutch	17. Shift solenoid-C (Shift solenoid No.3)	27. Barometric pressure sensor
8. Transmission range sensor (Shift switch)	18. Shift solenoid-D (Shift solenoid No.4)	28. Solenoid power relay
9. Shift lock solenoid switch (if equipped)	19. Shift solenoid-E (Shift solenoid No.5)	29. Terminal arrangement of TCM coupler (Viewed from harness side)
10. Shift lock solenoid (if equipped)	20. TCC solenoid (Lock-up solenoid)	

FAIL SAFE FUNCTION

This function is provided by the safe mechanism that assures safe driveability even when the solenoid valve, sensor or its circuit fails.
The table below shows the fail safe function for each fail condition of sensor, solenoid or its circuit.

Area	Detecting condition	Fail safe function
Input/Turbine speed sensor circuit (DTC P0715)	Input shaft speed sensor signal voltage is too high or too low.	• When vehicle running and in shift change by automatic electronic control, gear is fixed to gear which is going to be selected and lock-up function is turned OFF. • When vehicle running and in no shift change, gear is fixed to gear right before the trouble occurred and lock-up function is turned OFF. • When vehicle is at stop after or during detecting trouble, or in shift change by manual operation while running, gear is fixed as the followings and lock-up function is turned OFF. "P" range → P, "R" range → R, "N" range → N, "D" range → 3rd, "2" range → 2nd, "L" range → 1st
Output shaft speed sensor circuit (DTC P0720)	Output shaft speed sensor signal voltage is too high or too low.	
Shift solenoid (DTC P0753) (DTC P0758) (DTC P0763) (DTC P0768) (DTC P0773)	• Solenoid output voltage is too high although TCM orders solenoid to turn off. • Solenoid output voltage is too low although TCM orders solenoid to turn on.	• When select lever is "P", "R", "N", "D" or "2" range, A/T solenoid power relay is turned OFF and gear is fixed as follows : "P" range → P, "R" range → R, "N" range → N, "D" range → 3rd • When select lever is "2" range, gear is fixed to pre programmed gear position of several patterns as follows : – Malfunction of No.1 solenoid → 3rd – Malfunction of No.2 solenoid → 3rd – Malfunction of No.3 solenoid → 2nd – Malfunction of No.4 solenoid → 1st or 2nd – Malfunction of No.5 solenoid → 2nd or 3rd – Malfunction of 2 or more solenoids → 3rd • When select lever is "L" range, gear is fixed to pre programmed gear position of several patterns as follows : – Malfunction of No.1 solenoid → 3rd – Malfunction of No.2 solenoid → 1st – Malfunction of No.3 solenoid → 2nd – Malfunction of No.4 solenoid → 1st or 2nd – Malfunction of No.5 solenoid →1st – Malfunction of 2 or more solenoids → 3rd
TCC circuit (DTC P0743)		Lock-up function is turned OFF.

Area	Detecting condition	Fail safe function
A/T hardware itself (DTC P0730)	Difference in detected revolution between input shaft speed sensor and output shaft speed sensor is too wide.	"P" range → P, "R" range → R, "N" range → N, "D"/"2"/"L" range "To be controlled as follows : 1) When detecting trouble at first, gear is selected well-suited gear calculated with parameters of each sensor's rev. number and gear position just when the trouble occurred. Lock-up function is turned OFF. 2) If A/T can transmit driving force under the above condition, gear is fixed the selected gear until ignition switch is turned OFF. 3) If A/T can not transmit driving force under the above condition, after once vehicle stop, gear which can transmit drive force is searched one by one until gear is found out. After gear is found out, position of gear is held until ignition switch is turned OFF.
Transmission range sensor circuit (DTC P0705)	No shift switch signal is inputted or two or more shift switch signals are inputted at the same time.	• When vehicle running, shift range position is fixed to shift range position right before the trouble occurred until vehicle stop and lock-up function is turned OFF. • When vehicle is at stop after or during detecting the trouble, gear is fixed as the followings and lock-up function is turned OFF. – When 2 adjoining gear position signals are inputted. "P", "R" range → R, "R", "N" range → R, "N", "D" range → D, "D", "2" range → D, "2", "L" range → 2nd – When 2 or more signals excepting above or no signal are inputted. "P" range → P, "R" range → R, "N" range → N, "D"/"2"/"L" range → 3rd
Transmission temperature sensor circuit (DTC P0710)	• A/T fluid temp. signal input voltage is too low. • A/T fluid temp. signal input voltage does not go down although standard value of engine rev. signal is inputted.	• When detecting circuit open, TCM control as fluid temperature is 100°C (212°F). • Lock-up function is turned OFF.
Engine speed input circuit (DTC P0725)	Inputted engine rev. signal is too low or too high.	• Engine rev. is processed as 4000 rpm. • No compensation or judgement for gear shift control, for which engine rev. is considered, is processed. • Lock-up function is turned OFF.
Engine coolant temp./Barometric pressure signal circuit (DTC P1709)	No or abnormal engine coolant temp. signal is inputted	• No compensation for gear shift control, for which engine coolant temp. and barometric pressure are considered, is processed. • Lock -up function is turned OFF.

Area	Detecting condition	Fail safe function
Throttle position signal circuit (DTC P1700)	No or abnormal throttle opening signal is inputted	• Scheduling of automatic gear shift is performed as throttle valve opening is 0%. • Control of automatic gear shift (i.e. control of oil pressure) is performed as throttle valve opening is 100%. • Coast down shifting is performed when brake is applied and engine rev. is less than 1,500 rpm. • Lock-up function is turned OFF.
Transmission control system electrical (DTC P0702)	Solenoid power supply relay output voltage is too high although TCM orders relay to turn off or relay output voltage is too low although TCM orders relay to turn on.	• When relay shorted, the gear is fixed as the followings and lock-up function is turned OFF. "P" range → P, "R" range → R, "N" range → N, "D" range → 3rd, "2" range → 2nd, "L" range → 1st • When relay open, power supply to all solenoids is cut and the gear is fixed as the followings. Lock-up function is turned OFF. "P" range → P, "R" range → R, "N" range → N, "D"/"2"/"L" range → 3rd
Internal malfunction of TCM (DTC P1702)	Incorrect calculations of checking TCM programmed data indicated.	Power supply to all solenoid is cut and the gear is fixed as follows : "P" range P, "R" range R, "N" range N, "D"/"2"/"L" range "3rd

CHANGE MECHANISM

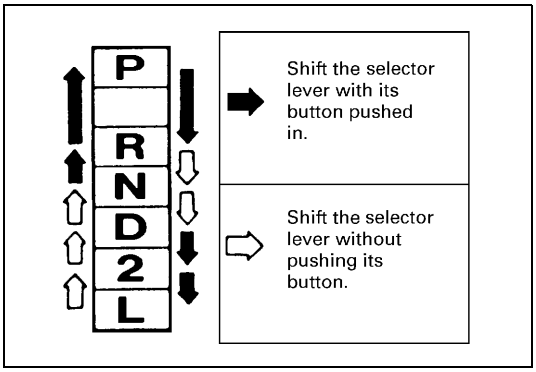

The same select pattern shift lever is used as the floor type and frequently used "N" and "D" ranges are made selectable freely.

AUTOMATIC GEAR SHIFT DIAGRAM

Automatic shift schedule as a result of shift control is shown below.

[For 2WD model]

	Shift					
Throttle opening	1→2	2→3	3→4	4→3	3→2	2→1
Full throttle	44	98	-	135	87	35
Closed throttle	13	26	43	34	9	9

Gear Shift Diagram

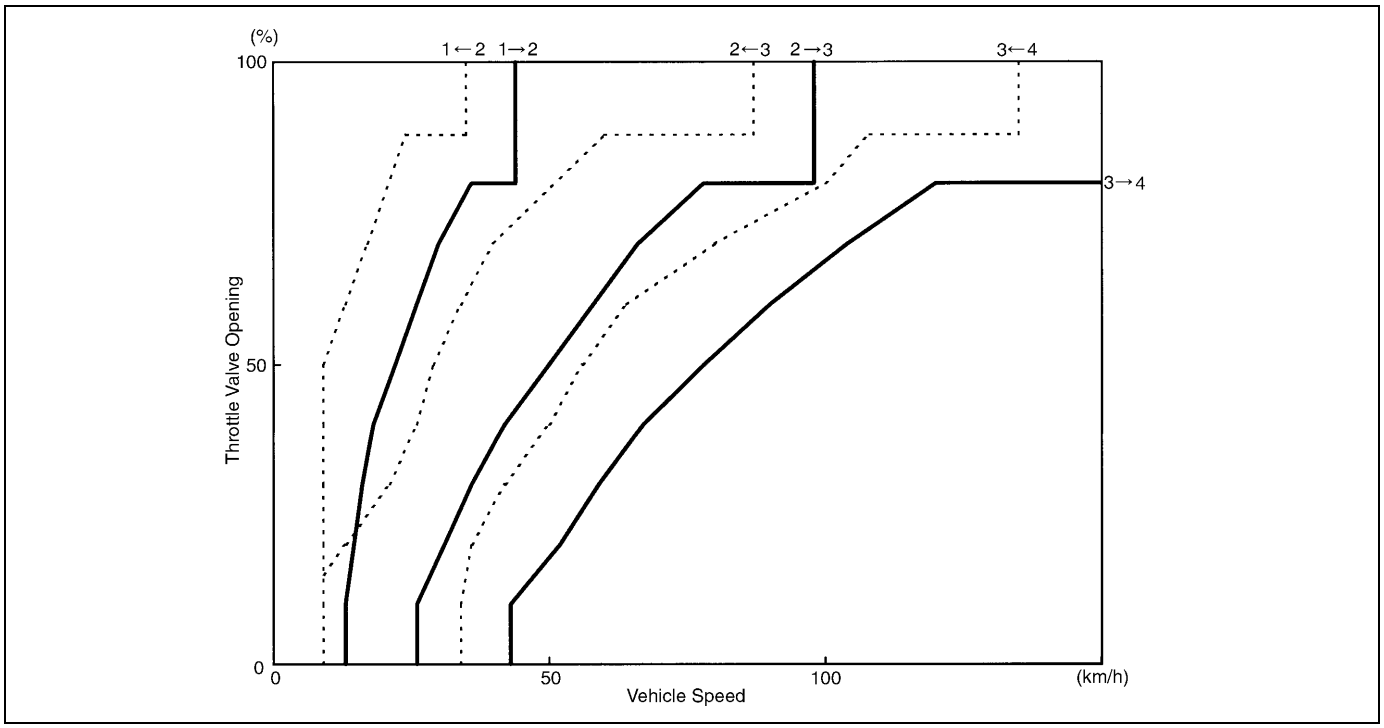

TCC Lock-up Diagram

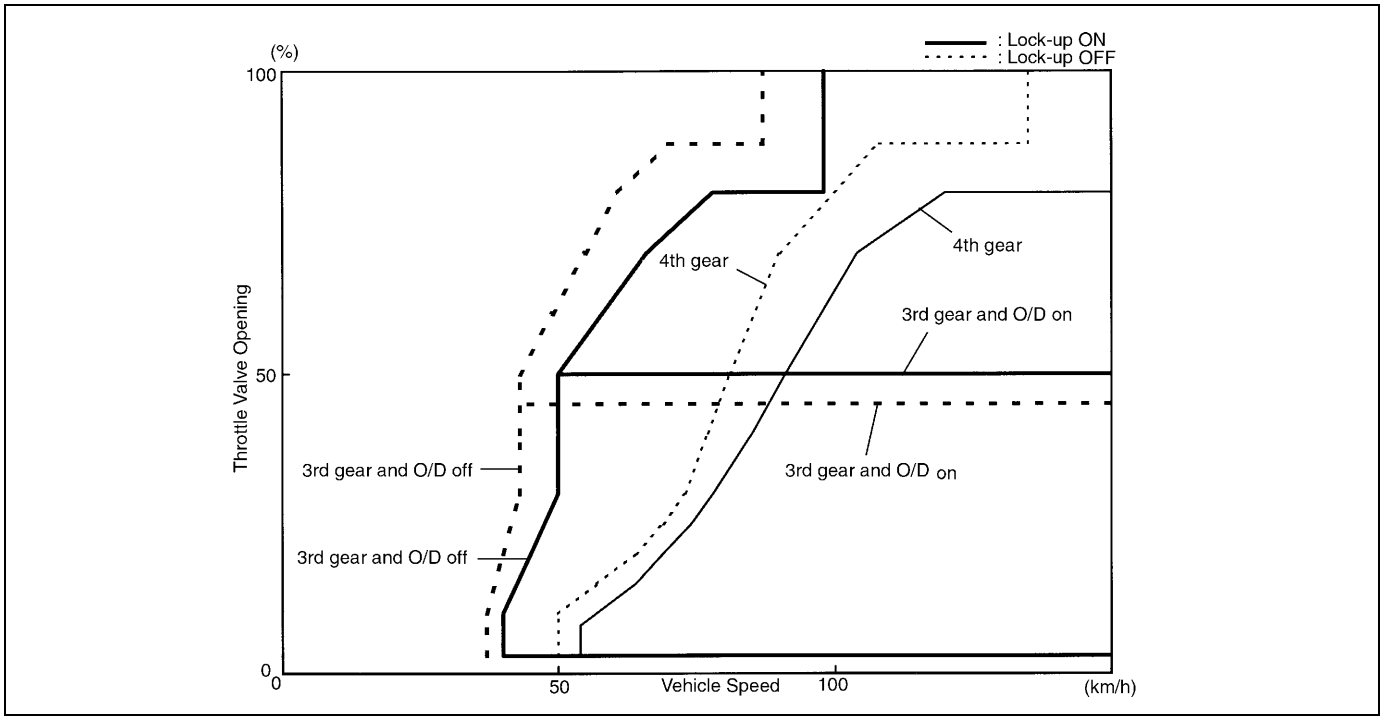

[For 4WD model]

	Shift					
Throttle opening	1→2	2→3	3→4	4→3	3→2	2→1
Full throttle	40	90	143	124	80	32
Closed throttle	12	24	40	31	9	9

Gear Shift Diagram

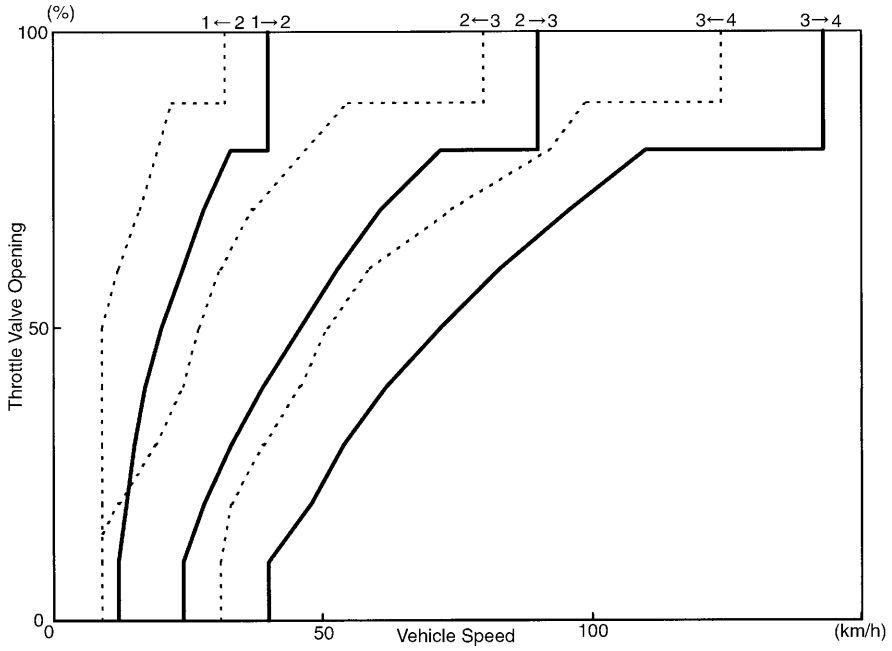

TCC Lock-up Diagram

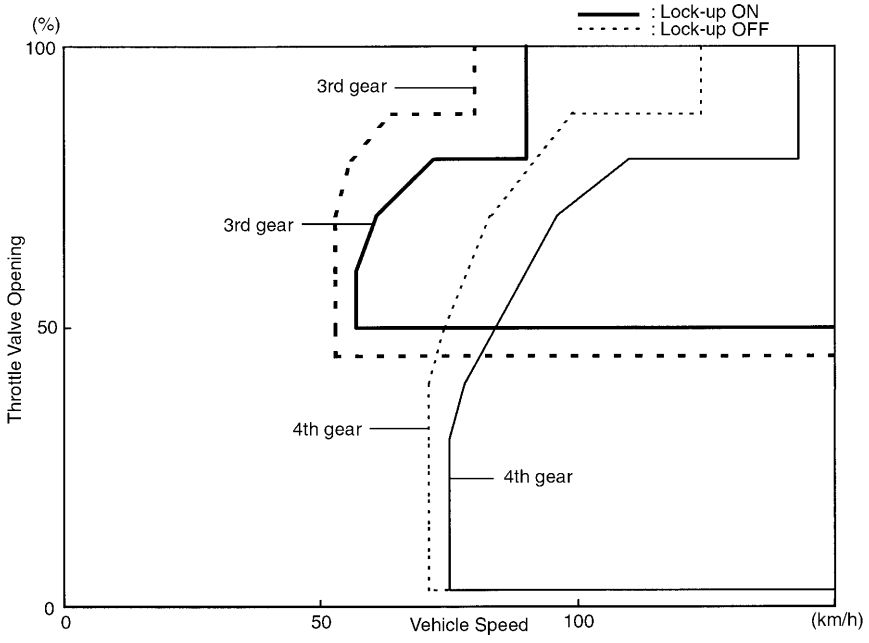

DIAGNOSIS

This vehicle is equipped with an electronic transmission control system, which controls the automatic shift up and shift down timing, etc. suitably to vehicle driving conditions.
When diagnosing a trouble in the transmission including this system, follow “AUTOMATIC TRANSMISSION DIAGNOSTIC FLOW TABLE” given below to obtain correct result smoothly.

AUTOMATIC TRANSMISSION DIAGNOSTIC FLOW TABLE

NOTE:

For the details of each step, refer to the following pages.

Step	Action	Yes	No
1	Customer Complaint Analysis 1) Perform customer complaint analysis referring to the following page. Was customer complaint analysis performed according to instruction on the following page?	Go to Step 2.	Perform customer complaint analysis.
2	Diagnostic Trouble Code (DTC) Check, Record and Clearance 1) Check for DTC referring to the following page. Is there any DTC(s)?	1) Print DTC or write it down and clear it by referring to “DTC CLEARANCE” in this section. 2) Go to Step 3.	Go to Step 4.
3	Visual Inspection 1) Perform visual inspection referring to the following page. Is there any faulty condition?	1) Repair or replace malfunction part. 2) Go to Step 11.	Go to Step 5.
4	Visual Inspection 1) Perform visual inspection referring to the following page. Is there any faulty condition?		Go to Step 8.
5	Trouble Symptom Confirmation 1) Confirm trouble symptom referring to the following page. Is trouble symptom identified?	Go to Step 6.	Go to Step 7.
6	Rechecking and Record of DTC. 1) Recheck for DTC referring to “DTC CHECK” in this section. Is there any DTC(s)?	Go to Step 9.	Go to Step 8.
7	Rechecking and Record of DTC. 1) Recheck for DTC referring to “DTC CHECK” in this section. Is there any DTC(s)?	Go to Step 9.	Go to Step 10.

Step	Action	Yes	No
8	Automatic Transmission Basic Check and Trouble Diagnosis Table 1) Check and repair according to “A/T BASIC CHECK” and “TROUBLE DIAGNOSIS TABLE” in this section. Are check and repair complete?	Go to Step 11.	1) Check and repair malfunction part(s). 2) Go to Step 11.
9	Troubleshooting for DTC 1) Check and repair according to applicable DTC Diagnostic Flow Table. Are check and repair complete?		
10	Check for Intermittent Problems 1) Check for intermittent problems referring to the following page. Is there any faulty condition?	1) Repair or replace malfunction part(s). 2) Go to Step 11.	Go to Step 11.
11	Final Confirmation Test 1) Clear DTC if any. 2) Perform final confirmation test referring to the following page. Is there any problem symptom, DTC or abnormal condition?	Go to Step 6.	End.

1. CUSTOMER COMPLAINT ANALYSIS

Record details of the problem (failure, complaint) and how it occurred as described by the customer. For this purpose, use of such a questionnaire form as shown below will facilitate collecting information to the point required for proper analysis and diagnosis.

CUSTOMER QUESTIONNAIRE (EXAMPLE)

User name:	Model:	VIN:	
Date of issue:	Date Reg.	Date of problem:	Mileage:
DESCRIPTION OF PROBLEM			
Engine does not start		Engine stops	
Vehicle does not move (forward, rearward)		Transmission does not shift (1st, 2nd, 3rd, 4th, Rev) gear	
No lock-up (Lock-up clutch operation)		Automatic shift does not occur	
Shift point too high or too low		Transmission slipping in (1st, 2nd, 3rd, 4th, Rev) gear	
Excessive gear change shock		Other	
VEHICLE/ENVIRONMENTAL CONDITION WHEN PROBLEM OCCURS			
Environmental Condition			
Weather	fair/cloudy/rain/snow/always/other( )		
Temperature	hot/warm/cool/cold/( ) °C/always		
Frequency	always/sometimes (times/ day, month)/only once		
Road	urban/suburb/highway/mountainous (uphill/downhill)/tarmacadam/gravel/other( )		
Vehicle Condition			
Transmission range	(P, R, N, D, 2, L) range/(→) range		
Transmission temp.	cold/warming up phase/warmed up		
Vehicle	at stop/during driving (constant speed/accelerating/decelerating/right hand corner/left hand corner)/other ( )/speed (km/h)		
Engine	Speed (r/min)/throttle opening (idle/about %/full)		
Brake	Apply/Not apply		
"O/D OFF" switch	ON/OFF		
MALFUNCTION INDICATOR LAMP FUNCTION			
always ON/sometimes ON/not on			
Diagnostic trouble code indicated/not indicated			
Diagnostic trouble code recorded			

NOTE:

The above form is a standard sample. It should be modified according to conditions characteristic of each market.

2. DIAGNOSTIC TROUBLE CODE (DTC) CHECK, RECORD AND CLEARANCE

To check DTC, refer to “DTC CHECK” in this section. When a DTC exists, it means existence of a malfunction in the system represented by that code but whether it still exists (current) or it occurred in the past and has gone (history) is unknown. To know it, clear this DTC once (Refer to “DTC CLEARANCE” in this section.), perform test drive and/or “TROUBLE SYMPTOM CONFIRMATION” in this section and then check DTC again as described in “DTC CHECK”. Attempt to diagnose the trouble based on the DTC recorded in this step only or failure to clear the DTC in this step may mislead the diagnosis or make diagnosing difficult. Even after checking the DTC with the SUZUKI scan tool, diagnosis should be performed according to this flow chart to check TCM for proper self-diagnosis function.

3 and 4. VISUAL INSPECTION

As a preliminary step, perform visual check of the following items that support proper function of the automatic transmission.

INSPECTION ITEM	REFERRING SECTION
• Engine oil ----- level, leakage	Section 0B
• Engine coolant ----- level, leakage	Section 0B
• A/T fluid ----- level, leakage, color	Section 0B
• Battery ----- fluid level, corrosion of terminal	
• A/T fluid hoses ----- disconnection, looseness, deterioration	
• Connectors of electric wire harness ----- disconnection, friction	Section 8
• Fuses ----- burning	Section 8
• Parts ----- installation, bolt ----- looseness	
• Parts ----- deformation	
• Other parts that can be checked visually	
Also add following items at engine start.	
• Indicator, warning lights in combination meter ----- ON (indicating abnormality in system) or OFF	Section 8C
• Other parts that can be checked visually	

5.TROUBLE SYMPTOM CONFIRMATION

Check if what the customer claimed in “CUSTOMER COMPLAINT ANALYSIS” is actually found in the vehicle and if that symptom is found, whether it is identified as a failure. (This step should be shared with the customer if possible.)

When the symptom is not actually found, possibility is :

- The symptom occurs under certain conditions.
  ----- Retry with the vehicle under different conditions.
- The trouble occurred only temporarily and normal operation has been restored.
  ----- Perform “DTC CHECK” and if the diagnostic trouble code is indicated, inspect according to the flow table for that DTC.

6 and 7. RECHECKING AND RECORD OF DTC

Refer to “DTC CHECK” in this section.

8. AUTOMATIC TRANSMISSION BASIC CHECK AND TROUBLE DIAGNOSIS TABLE

Perform basic automatic transmission check according to the list below first. When the end of the list has been reached, check the part of system suspected as a possible cause referring to “TROUBLE DIAGNOSIS TABLE” and based on symptoms appearing on vehicle (symptoms obtained through steps of customer complaint analysis, trouble symptom confirmation and/or A/T basic check) and repair or replace faulty parts, if any.

AUTOMATIC TRANSMISSION BASIC CHECK LIST

1) Power Supply Voltage Check
   Check that the battery voltage is within 10 – 14 V at engine stop.
2) A/T Fluid Check
   Check A/T fluid level and quality.
3) STALL TEST
   Perform stall test. Refer to “STALL TEST” in this section for details.
4) LINE PRESSURE TEST
   Perform line pressure test. Refer to “LINE PRESSURE TEST” in this section.
5) ROAD TEST
   Perform road test to understand correctly the trouble area.
6) Electrical Harness and Coupler Check
   Check the connection of the harness coupler. Check for the loose connection of the harness, loose connection of the terminals.

9. DIAGNOSTIC TROUBLE CODE FLOW TABLE

Based on the DTC indicated in STEP 6 and STEP 7 and referring to “DTC CHECK”, locate the cause of the trouble, namely in a sensor, switch, wire harness, connector, actuator, TCM or other part and repair or replace faulty parts.

10. CHECK FOR INTERMITTENT PROBLEM

Check parts where an intermittent trouble is easy to occur (e.g. wire harness, connector, etc.), referring to “INTERMITTENT AND POOR CONNECTION” in Section 0A and related circuit of DTC recorded in Step 2.

11. FINAL CONFIRMATION TEST

Confirm that the problem symptom has gone and the automatic transmission is free from any abnormal conditions. If what has been repaired is related to the malfunction DTC, clear the DTC once and perform test driving and confirm that a normal code is indicated.

TROUBLE DIAGNOSIS TABLE

NOTE:

For the inspection of throttle position sensor, refer to "TP SENSOR" in Section 6E.

TABLE 1 (ELECTRICAL)

Condition		Possible Cause	Correction
No up-shift	1st → 2nd 2nd → 3rd	• Output shaft speed sensor or its circuit faulty	Inspect output shaft speed sensor.
		• Shift solenoid -D (No.4) (1st → 2nd), -A (No.1) (1st → 3rd), -E (No.5) (2nd → 3rd), and/or its circuit faulty	Repair or replace.
		• Throttle position sensor or its circuit faulty	Inspect TP sensor.
		• TCM faulty	Replace TCM.
	3rd → 4th	• Output shaft speed sensor or its circuit faulty	Inspect output shaft speed sensor.
		• Shift solenoid -B (No.2), -C (No.3) or its circuit faulty	Repair or replace.
		• O/D CUT switch circuit faulty	Refer to "O/D OFF SWITCH" in this section and/or inspect its circuit.
		• Throttle position sensor or its circuit faulty	Inspect TP sensor.
		• TCM faulty	Replace TCM.
No down-shift	4th → 3rd 3rd → 2nd 2nd →1st	• Shift solenoid -C (No.3) (4th → 3rd), -D (No.4) (2nd → 1st), -A (No.1) (3rd → 2nd), -B (No.2) (4th → 3rd), -E (No.5) (3rd → 2nd) or its circuit faulty	Repair or replace.
		• Throttle position sensor or its circuit faulty	Inspect TP sensor.
		• TCM fault	Replace TCM.
Shift point too high or too low		• Throttle position sensor, output shaft speed sensor or its circuit faulty	Inspect TP sensor and/or output shaft speed sensor.
Vehicle does not move		• Shift solenoid -A (No.1), -C (No.3), -D (No.4) or its circuit faulty	Repair or replace.
Excessive slip		• Shift solenoid -A (No.1) to -E (No.5) or its circuit faulty	Repair or replace.
Excessive shock at N → D or N → R		• Shift solenoid -A (No.1), -D (No.4), -E (No.5) or its circuit faulty	Repair or replace.
		• ISC circuit	Inspect ISC circuit.
No lock-up or No lock-up OFF		• TCC (lock-up) solenoid valve or its circuit faulty	Repair or replace.
		• Throttle position sensor or its circuit faulty	Refer to "THROTTLE POSITION SENSOR" in Section 6E.
		• Input shaft speed and/or output shaft speed sensor or its circuit faulty.	Refer to "ECT SENSOR" in Section 6E.
		• Abnormal engine rev. signal or its circuit.	Repair or replace.
		• ECM faulty	Inspect ECM.

TABLE 2 (MECHANICAL)

Condition		Possible Cause	Correction
Vehicle does not move at any range		• Manual valve faulty	Clean or replace.
		• Primary regulator valve faulty	Clean or replace.
No gear change	**1st ↔ 2nd**	• Shift solenoid -D (No.4) and/or -E (No.5) stuck	Clean or replace.
	2nd ↔ 3rd	• Shift solenoid -A (No.1), -C (No.3) and/or fail valve No.1 stuck	Clean or replace.
	3rd ↔ 4th	• Shift solenoid -B (No.2), -C (No.3) and/or fail valve No.2 stuck	Clean or replace.
Harsh engagement	**P, N → R**	• Front clutch accumulator faulty	Clean or replace.
	N → D	• 1st & 2nd brake accumulator faulty	Clean or replace.
	1st → 2nd at D range or 2 range	• Front clutch accumulator faulty	Clean or replace.
		• Shift solenoid -D (No.4)	Clean or replace.
	2nd → 3rd at D range	• Direct clutch accumulator faulty	Clean or replace.
		• Shift solenoid -E (No.5)	Clean or replace.
	3rd → 4th at D range	• Overdrive brake accumulator faulty	Clean or replace.
		• Shift solenoid -B (No.2)	Clean or replace.
	All gear change	• Primary regulator valve faulty	Clean or replace.
Excessive slip (low line pressure)		• Primary regulator valve faulty	Clean or replace.
Vehicle does not move at	**1st, 2nd, 3rd and reverse gear**	• Rear clutch faulty	Repair or replace.
	Reverse gear	• Reverse brake faulty	Repair or replace.
	2nd, 3rd and 4th gear	• Front clutch faulty	Repair or replace.
	3rd and 4th gear	• Direct clutch faulty	Repair or replace.
	1st and 2nd gear	• 1st & 2nd brake faulty	Repair or replace.
	4th gear	• Overdrive brake faulty	Repair or replace.
	Any forward and reverse gear	• Parking lock pawl faulty	Repair or replace.
Shock or engine stalls when starting off and stopping		• TCC (lock-up clutch) faulty	Inspect and replace as necessary.
		• TCC (lock-up) solenoid faulty	Clean or replace.
		• Lock-up control valve faulty	Clean or replace.
		• Lock-up signal valve faulty	Clean or replace.
No up-shift	**1st → 2nd**	• Front clutch faulty	Repair or replace.
	2nd → 3rd	• Direct clutch faulty	Repair or replace.
	3rd → 4th	• Overdrive brake faulty	Repair or replace.
No engine braking	**2nd or 3rd gear**	• Front, rear or direct clutch or 1st & 2nd brake faulty	Repair or replace
	L range 1st gear	• Direct clutch or 1st & 2nd brake faulty	Repair or replace.
No lock-up		• Torque converter clutch faulty	Inspect and replace as necessary.
		• Lock-up control valve faulty	Clean or replace.
		• TCC (lock-up) solenoid faulty	Clean or replace.
		• Secondary regulator valve faulty	Clean or replace.
		• Signal valve faulty	Clean or replace.

STALL TEST

This test is to check overall performance of automatic transmission and engine by measuring stall speed at “D” and “R” ranges. Be sure to perform this test only when transmission fluid is at normal operating temperature and its level is between FULL and LOW marks.

CAUTION:
- **Do not run engine at stall more than 5 seconds continuously, for fluid temperature may rise excessively high.**
- **After performing stall test, be sure to leave engine running at idle for longer than 30 seconds before another stall test.**

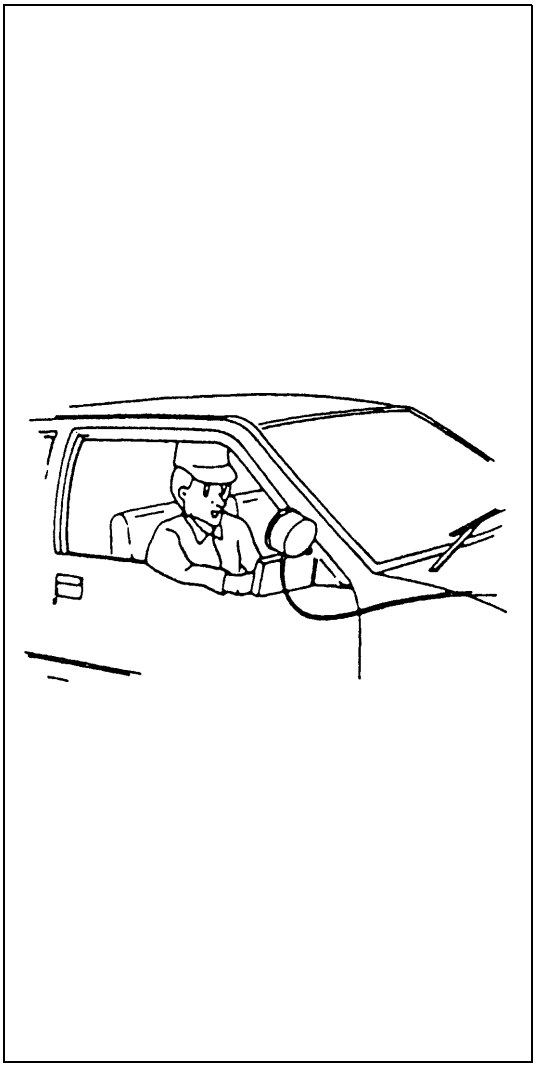

1) Apply parking brake and block wheels.
2) Install tachometer.
3) Start engine with select lever shifted to “P”.
4) Depress brake pedal fully.
5) Shift select lever to “D” and depress accelerator pedal fully while watching tachometer. Read engine rpm quickly when it has become constant (stall speed).
6) Release accelerator pedal immediately after stall speed is checked.
7) In the same way, check stall speed in “R” range.
8) Stall speed should be within following specification.

Stall speed
: 2,750 – 3,150 r/min

Test result	Possible cause
Lower than standard level	• Lack of engine output • Defective torque converter
Higher than standard level in “D” range	• Low line pressure • Malfunctioning 1st & 2nd brake • Malfunctioning rear clutch • Malfunctioning stator one-way clutch
Higher than standard level in “R” range	• Low line pressure • Malfunctioning rear clutch • Malfunctioning reverse brake • Malfunctioning stator one-way clutch • Malfunctioning direct clutch

TIME LAG TEST

This test is to check conditions of clutch, reverse brake and fluid pressure. “Time lag” means time elapsed since select lever is shifted with engine idling till shock is felt.

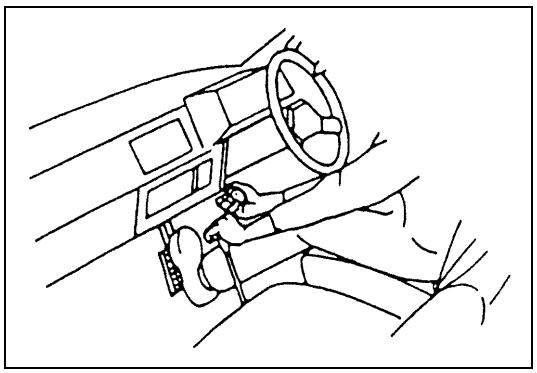

1) With chocks placed in front and behind front and rear wheels respectively, depress brake pedal.
2) Start engine.
3) With stop watch ready, shift select lever from “N” to “D” range and measure time from that moment till shock is felt.
4) Similarly measure time lag by shifting select lever from “N” to “R” range.

Specification for time lag
“N” → “D” : Less than 1.0 sec.
“N” → “R” : Less than 1.2 sec.

NOTE:

- **Make sure that selector cable is properly adjusted.**
- **When repeating this test, be sure to wait at least minute after select lever is shifted back to “N” range.**
- **Engine should be warmed up fully for this test.**

Test result	Possible cause
When “N” → “D” time lag exceeds specification.	• Low line pressure • Worn rear clutch • Worn 1st & 2nd brake
When “N” → “R” time lag exceeds specification.	• Low line pressure • Worn rear clutch • Worn direct clutch • Worn reverse brake

LINE PRESSURE TEST

Purpose of this test is to check operating conditions of each part by measuring fluid pressure in fluid pressure line.
Line pressure test requires following conditions.

- Automatic fluid is at normal operating temperature (70 – 80°C /158 – 176°F).
- Fluid is filled to proper level (between FULL and LOW on dipstick).

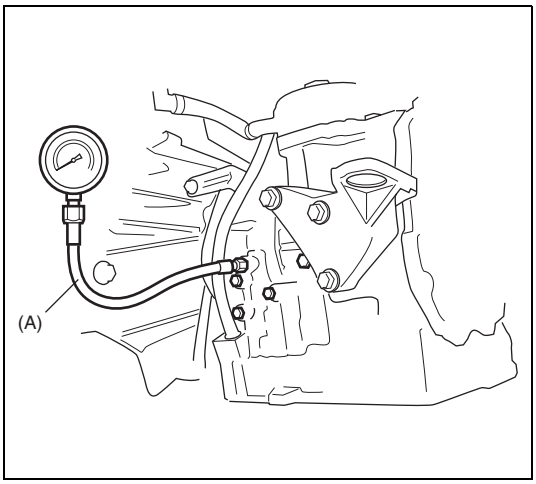

1) Apply parking brake securely and place chocks against wheels.
2) Remove fluid pressure check hole plug bolt.
3) Attach oil pressure gauge to fluid pressure check hole in transmission case.

Special tool
(A) : 09925-37811-001

CAUTION:
After attaching oil pressure gauge, check that no fluid leakage exists.

4) Depress foot brake fully, run engine at idle and stall then check fluid pressure in “D” or “R” range.

CAUTION:
Do not continue running engine at stall speed longer than 5 seconds.

Line pressure

	“D” range	“R” range
At idle speed	**7.6 – 9.2 kg/cm^2** **108.1 – 130.8 psi**	**14.1 – 17.3 kg/cm^2** **200.6 – 246.0 psi**
At stall speed	**7.9 – 9.5 kg/cm^2** **112.4 – 135.0 psi**	**14.4 – 17.6 kg/cm^2** **204.8 – 250.2 psi**

Test result	Possible cause
Line pressure higher than standard level in each range	• Malfunctioning regulator valve
Line pressure lower than standard level in each rang	• Malfunctioning regulator valve • Defective oil pump
Line pressure lower than standard level only in “D” range	• Fluid leakage from “D” range pressure circuit • Fluid leakage from 1st & 2nd brake • Fluid leakage from rear clutch
Line pressure lower than standard level only in “R” range	• Fluid leakage from “R” range pressure circuit • Fluid leakage from rear clutch • Fluid leakage from direct clutch • Fluid leakage from reverse brake

ENGINE BRAKE TEST

WARNING:
Before test, make sure that there is no vehicle behind so as to prevent rear-end collision.

1) While driving vehicle in 3rd gear of “D” range, shift select lever down to “2” range and check if engine brake operates.
2) In the same way as in Step 1), check engine brake for operation when select lever is shifted down to “L” range.
3) Engine brake should operate in above test.

Test result	Possible cause
Fails to operate when shifted down to “2” range	• Defective shift switch • 1st & 2nd brake defective • Direct clutch defective
Fails to operate when shifted down to “L” range	

“P” RANGE TEST

1) Stop vehicle on a slope, shift select lever to “P” range and at the same time apply parking brake.
2) After stopping engine, depress brake pedal and release parking brake.
3) Then, release brake pedal gradually and check that vehicle remains stationary.
4) Depress brake pedal and shift select lever to “N” range.
5) Then, release brake pedal gradually and check that vehicle moves.

WARNING:
Before test, check to make sure no one is around vehicle or down on a slope and keep watchful for safety during test.

Test result	Possible cause
Vehicle moves at “P” range or remains stationary at “N” range	Defective parking lock pawl or spring

ELECTRONIC CONTROL SYSTEM DIAGNOSIS

TCM has on-board diagnostic system (a system self-diagnosis function). Investigate where the trouble is by referring to “DIAGNOSTIC FLOW TABLE” and “DTC TABLE” in this section.

PRECAUTIONS IN DIAGNOSING TROUBLES

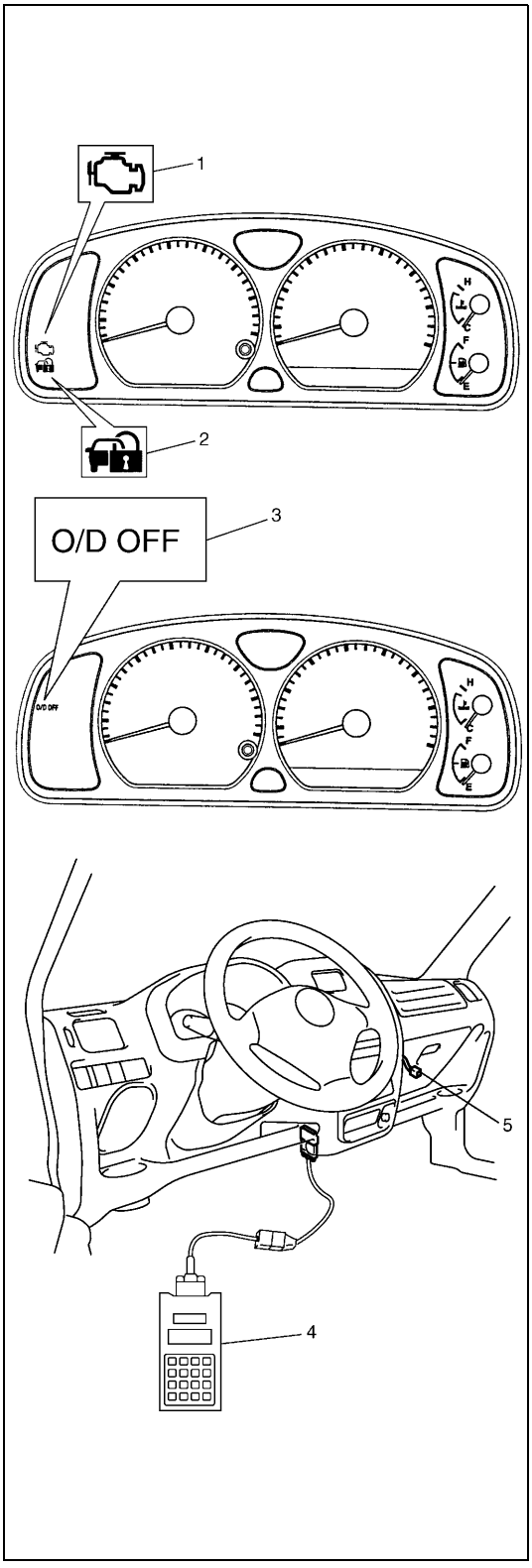

[PRECAUTIONS IN IDENTIFYING DTC]

- For vehicle equipped with immobilizer indicator lamp (2) (which comes on when turning on ignition switch leaving engine OFF), malfunction indicator lamp (MIL) (1) comes on when TCM detects malfunction of automatic transmission system.
- For vehicle equipped without immobilizer indicator lamp (2), malfunction indicator lamp (MIL) (1) does not come on although TCM detects malfunction of automatic transmission system.
- Don’t disconnect couplers from TCM, battery cable from battery, TCM ground wire harness from engine or main fuse before checking DTC stored in TCM memory.
  Such disconnection will clear memorized information in TCM memory.
- Using SUZUKI scan tool (Tech-1) (4), diagnostic trouble code (DTC) stored in TCM memory can be checked and cleared as well.
  Before its use, be sure to read Operator’s (instruction) Manual supplied with it carefully to have good understanding of its functions and usage.
- Not using scan tool, the DTC stored in TCM memory also can be checked and cleared.
  DTC stored in the TCM memory is outputted by flashing of “O/D OFF” lamp (3) with diagnosis switch terminal of monitor connector No.2 (5) grounded.
  If no DTC is stored in TCM memory, DTC No.12 is outputted repeatedly.
  If one or more DTCs are stored in TCM memory, they are outputted starting from smallest code number in increasing order.
  After all DTCs are outputted, all DTCs are outputted repeatedly.
- Be sure to read “PRECAUTIONS FOR ELECTRICAL CIRCUIT SERVICE” in Section 0A before inspection and observe what is written there.
- When replacing TCM with used one, all learned contents which are stored in TCM memory should be erased after the replacement referring to “LEARNING CONTROL INITIALIZATION” in this section.

[INTERMITTENT TROUBLES] and [NOTES ON SYSTEM CIRCUIT INSPECTION]
Refer to Section 0A.

DTC CHECK

[Check DTC with SUZUKI scan tool]

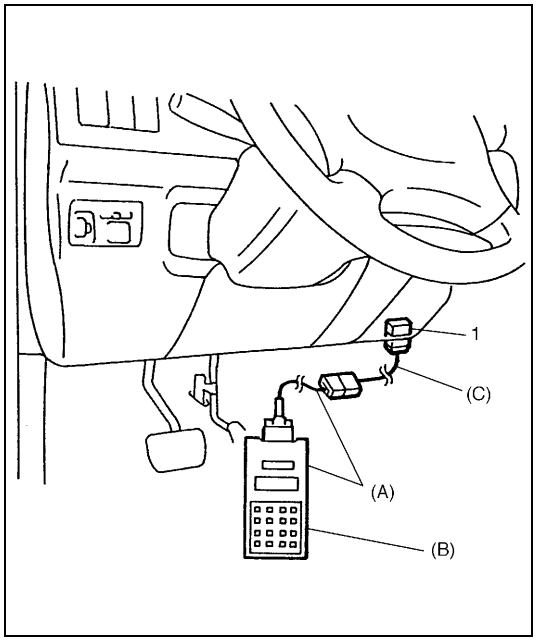

1) Turn ignition switch OFF.
2) After setting cartridge, connect SUZUKI scan tool to data link connector (DLC) (1) located on underside of instrument panel at driver's seat side.

Special tool
(A) : 09931-76011 (SUZUKI scan tool)
(B) : Mass storage cartridge
(C) : 09931-76030 (16/14 pin DLC cable)

3) Turn ignition switch ON.
4) Read DTC according to instructions displayed on SUZUKI scan tool and print it or write it down. Refer to SUZUKI scan tool operator's manual for further details.
5) After completing the check, turn ignition switch OFF and disconnect SUZUKI scan tool from data link connector (DLC) (1).

[Check DTC without SUZUKI scan tool]

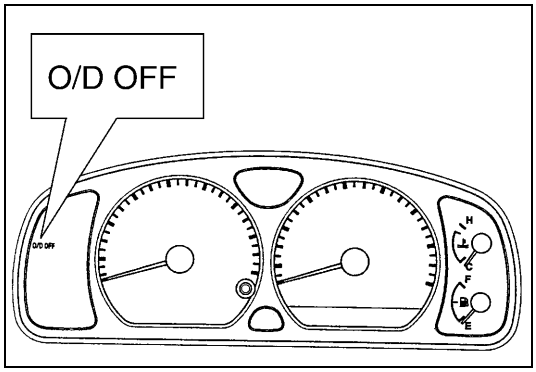

1) Turn ignition switch ON and make sure that O/D OFF lamp is OFF in combination meter (O/D off switch OFF).
2) Turn ignition switch OFF.

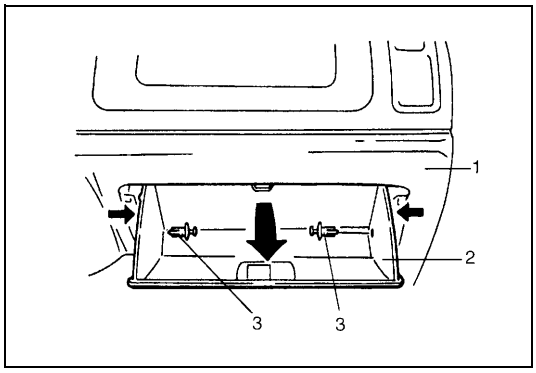

3) Pull out clip (3) and remove glove box (2) from instrument panel (1).

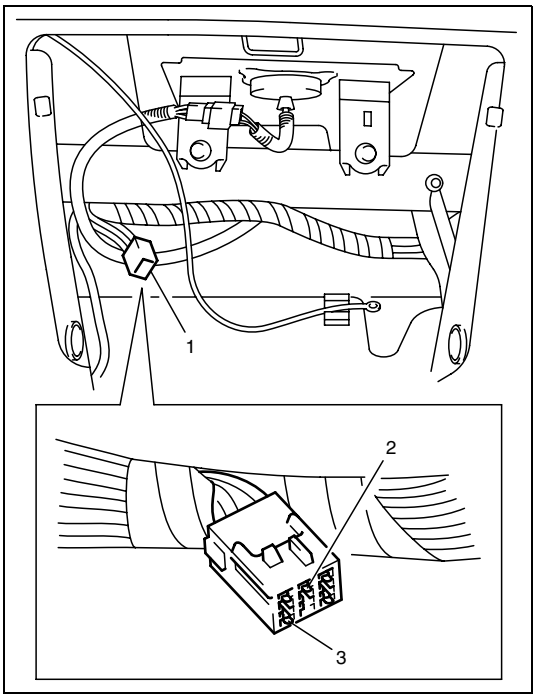

4) Using service wire, ground diagnosis switch terminal (2) of monitor connector No.2 (1).

3. Ground terminal

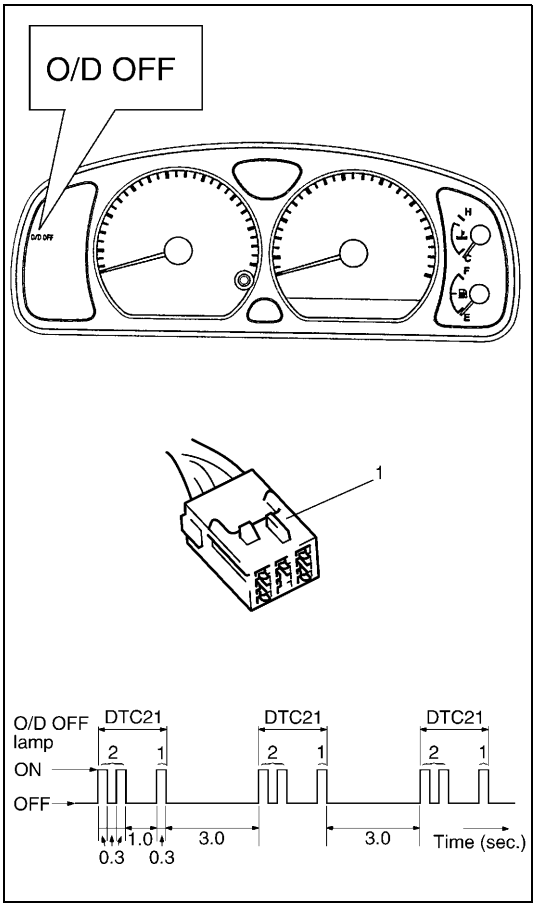

5) Turn ignition switch ON.
6) Read DTC from flashing pattern of O/D OFF lamp.
7) After completing the DTC check, turn ignition switch OFF and disconnect service wire from monitor connector No.2 (1).

DTC CLEARANCE

[Clear DTC with SUZUKI scan tool]

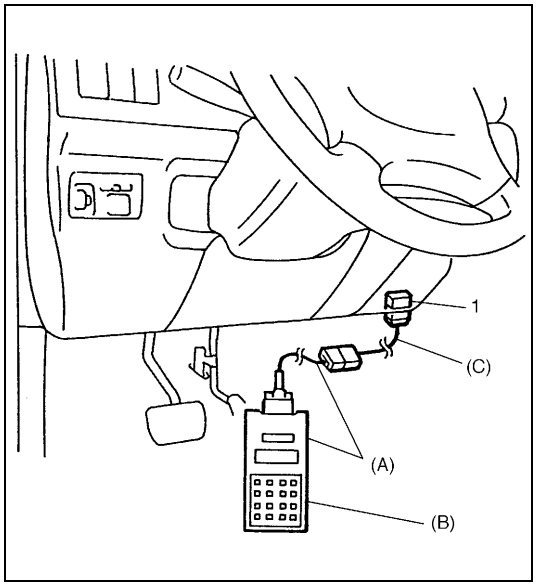

1) Turn ignition switch OFF.
2) After setting cartridge to scan tool, connect it to data link connector (DLC) (1) located on underside of instrument panel at driver's seat side.

Special tool
(A) : 09931-76011 (SUZUKI scan tool)
(B) : Mass storage cartridge
(C) : 09931-76030 (16/14 pin DLC cable)

3) Turn ignition switch ON.
4) Erase DTC according to instructions displayed on scan tool. Refer to SUZUKI scan tool operator's manual for further details.
5) After completing the clearance, turn ignition switch OFF and disconnect scan tool from data link connector (DLC) (1).

[Clear DTC without SUZUKI scan tool]

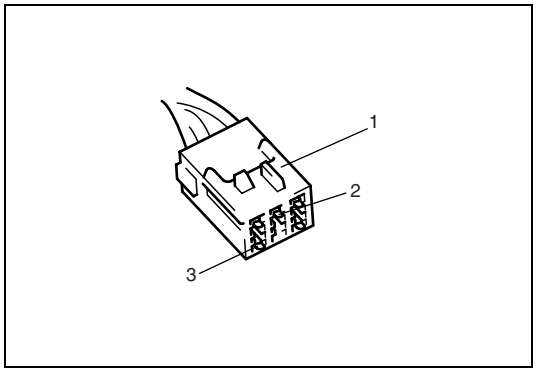

1) Turn ignition switch ON.
2) Using service wire, ground diagnosis switch terminal (2) of monitor connector No.2 (1) five times within 10 seconds.
3) Perform "DTC check" and confirm that only DTC12 (normal DTC) is displayed. If not, repeat step 1) and 2) and check again.

3. Ground terminal

DTC TABLE

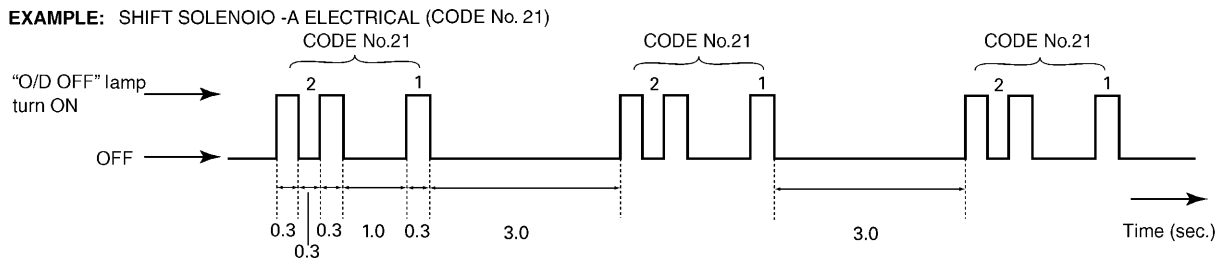

DTC NO.		"O/D OFF" Lamp Flashing Pattern of DTC (Not using scan tool)	DETECTING ITEMS	MIL	
Using scan tool	Not using scan tool			Vehicle equipped with immobilizer indicator lamp	Vehicle equipped without immobilizer indicator lamp
–	12		Normal	–	–
P0715	14	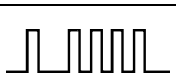	Input/Turbine speed sensor circuit malfunction	1 driving cycle	Not applicable
P0730	18		Incorrect gear ratio	2 driving cycles	Not applicable
P0753	21		Shift solenoid-A (No.1) electrical	1 driving cycle	Not applicable
	22				
P0758	23		Shift solenoid-B (No.2) electrical	1 driving cycle	Not applicable
	24				
P0763	43		Shift solenoid-C (No.3) electrical	1 driving cycle	Not applicable
P0768	45		Shift solenoid-D (No.4) electrical	1 driving cycle	Not applicable
P0773	48		Shift solenoid-E (No.5) electrical	1 driving cycle	Not applicable
P0743	25		Torque converter clutch (lock-up) system electrical	1 driving cycle	Not applicable
	26				

DTC NO.		"O/D OFF" Lamp Flashing Pattern of DTC (Not using scan tool)	DETECTING ITEMS	MIL	
Using scan tool	Not using scan tool			Vehicle equipped with immobilizer indicator lamp	Vehicle equipped without immobilizer indicator lamp
P0741	29		Torque converter clutch (lock-up) solenoid performance or stuck off	2 driving cycles	Not applicable
P0720	31		Output shaft speed sensor circuit malfunction	1 driving cycle	Not applicable
P1700	32		Throttle position signal input malfunction	1 driving cycle	Not applicable
	33				
P0705	34		Transmission range sensor circuit malfunction	1 driving cycle	Not applicable
P0725	35		Engine speed input circuit malfunction	2 driving cycles	Not applicable
P0710	36		Transmission temperature sensor circuit malfunction	2 driving cycles	Not applicable
	38				
P1709	51		Engine coolant temperature signal circuit	1 driving cycle	Not applicable
P0702	52		Transmission control system electrical	1 driving cycle	Not applicable
P1702			Internal malfunction of TCM		

TCM POWER AND GROUND CIRCUIT CHECK

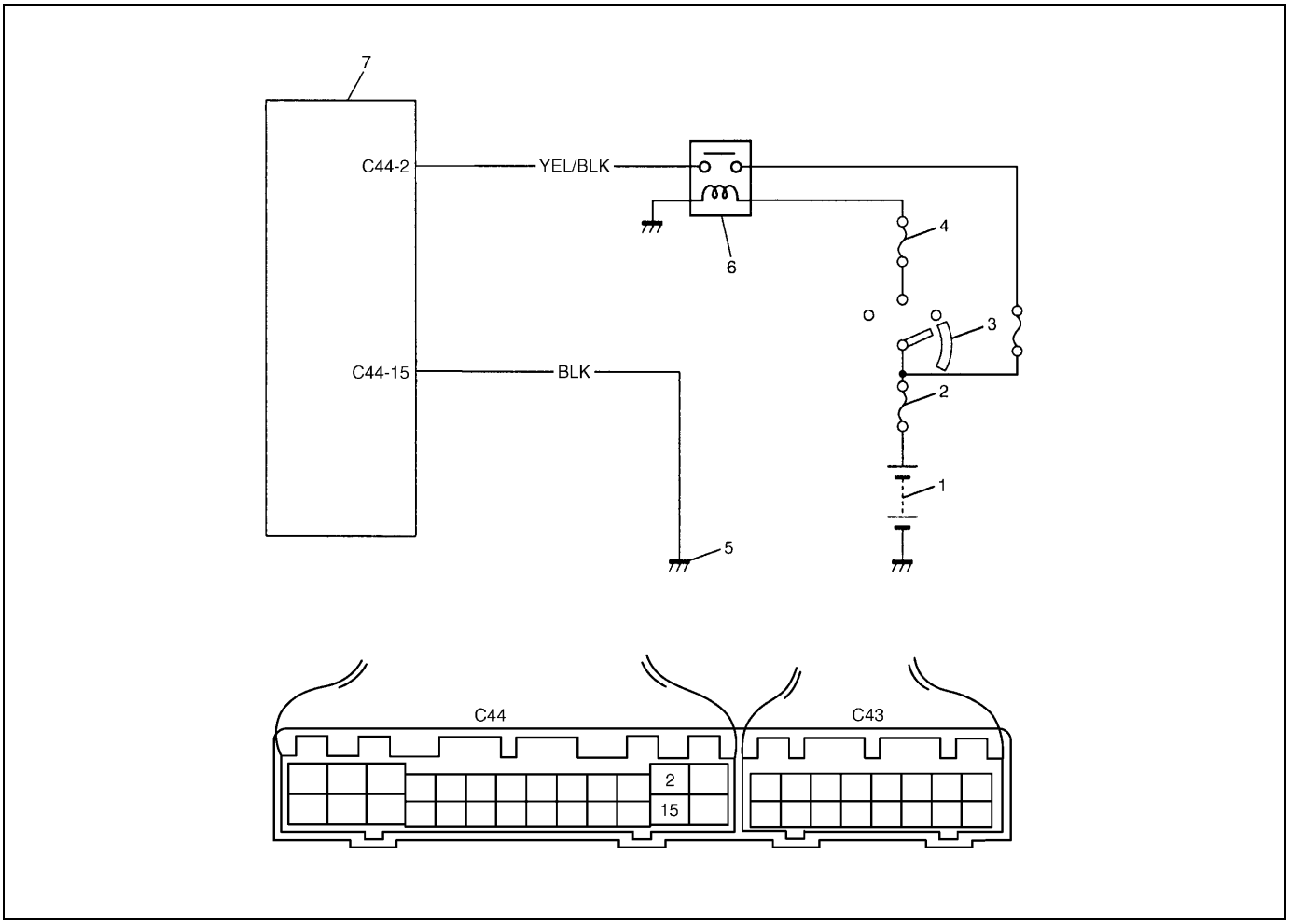

1. Battery	4. Circuit fuse (IG)	7. TCM
2. Main fuse	5. Ground	
3. Ignition switch	6. A/T relay	

DTC DETECTING CONDITION
• Automatic transmission doesn't shift to 1st gear at vehicle start in "D" range.

Step	Action	Yes	No
1	Check voltage between terminal "C44-2" of TCM coupler and body ground with ignition switch ON. Is it 10 – 14 V?	Go to Step 2.	YEL/BLK wire open or faulty A/T relay.
2	Check voltage between terminal "C44-15" of TCM coupler and body ground with ignition switch ON. Is it about 0 V?	Poor "C44-2" or "C44-15" connection. If all above are OK, replace known-good TCM and recheck.	"BLK" wire open.

DTC P0715 (DTC NO.14) INPUT/TURBINE SPEED SENSOR CIRCUIT MALFUNCTION

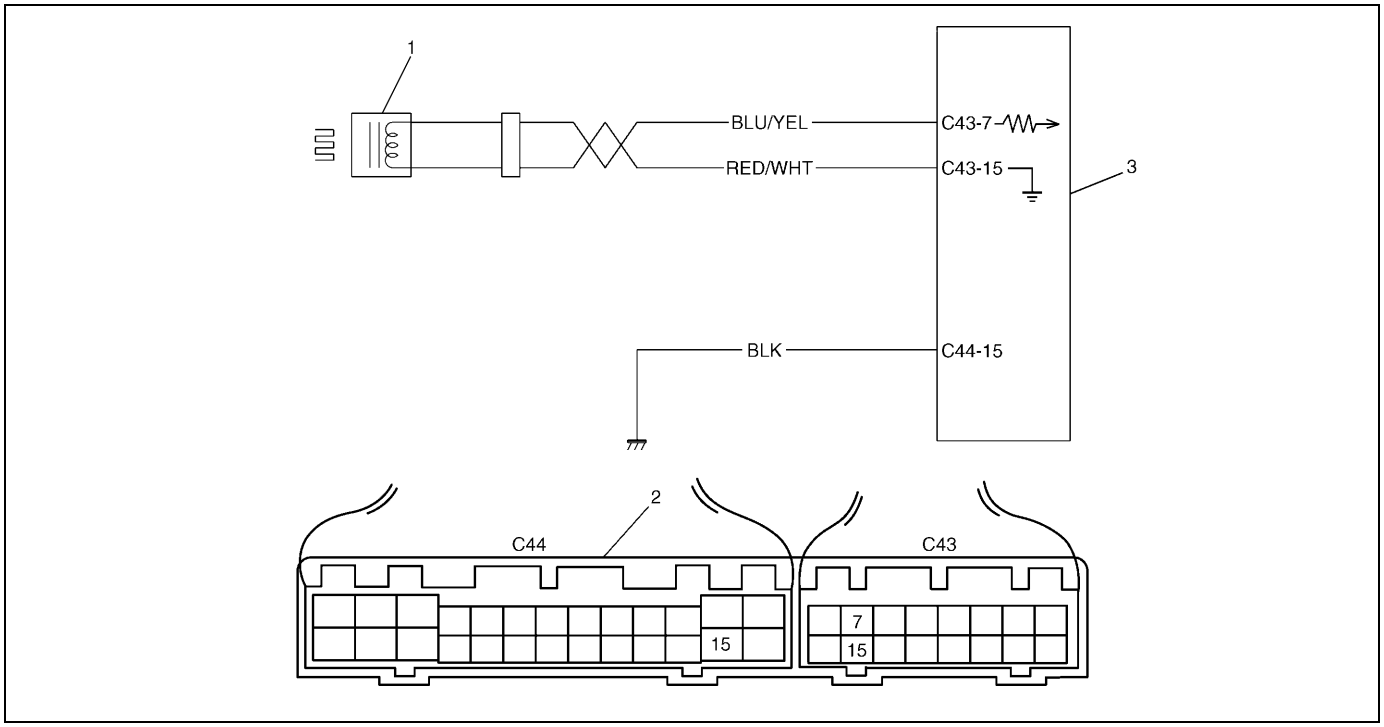

1. Input shaft speed sensor	2. TCM coupler (viewed from harness side)	3. TCM

DTC DETECTING CONDITION
• Input shaft speed sensor signal voltage too high or too low.

Step	Action	Yes	No
1	Was “AUTOMATIC TRANSMISSION DIAGNOSTIC FLOW TABLE” performed?	Go to Step 2.	Go to “AUTOMATIC TRANSMISSION DIAGNOSTIC FLOW TABLE”.
2	1) Turn ignition switch OFF and disconnect output shaft speed sensor – input shaft speed sensor coupler. 2) Measure resistance between terminals of the disconnected sensor side coupler. Is it 160–200 Ω? (See figure.)	Go to Step 3.	Replace input shaft speed sensor.
3	1) Connect output shaft speed sensor - input shaft speed sensor coupler then disconnect TCM couplers. 2) Measure resistance between terminal “C43-7” and “C43-15” of disconnected harness side coupler. Is it 160–200 Ω?	Go to Step 4.	“BLU/YEL” or “RED/WHT” wire open or shorted each other.
4	1) Turn ignition switch OFF and connect input shaft speed sensor coupler then disconnect TCM couplers. 2) Measure resistance between terminal “C43-7” (of disconnected harness side coupler) and body ground then terminal “C43-15” (of disconnected harness side coupler) and body ground. Are they about 0 Ω? (See figure.)	Short in between “BLU/YEL” wire and ground or “RED/WHT” wire and ground.	Poor connection of terminal “C43-7” or “C43-15” of TCM. If all the above are in good condition, substitute a known-good TCM and recheck.

Figure for Step 2

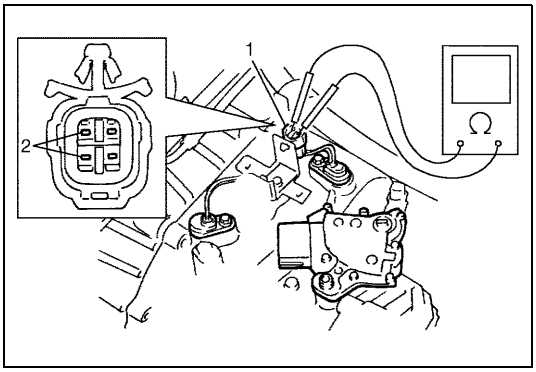

1.	Output shaft speed sensor - Input shaft speed sensor coupler
2.	Input shaft speed sensor terminal

Figure for Step 4

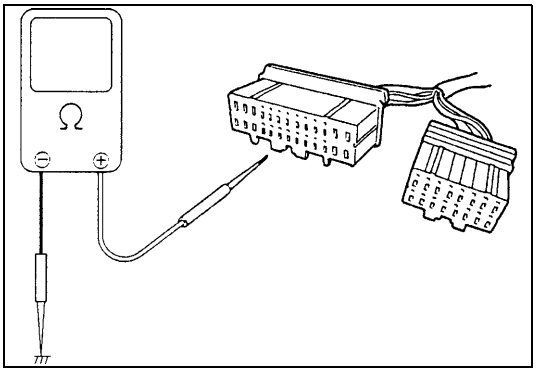

DTC P0730 (DTC NO. 18) INCORRECT GEAR RATIO

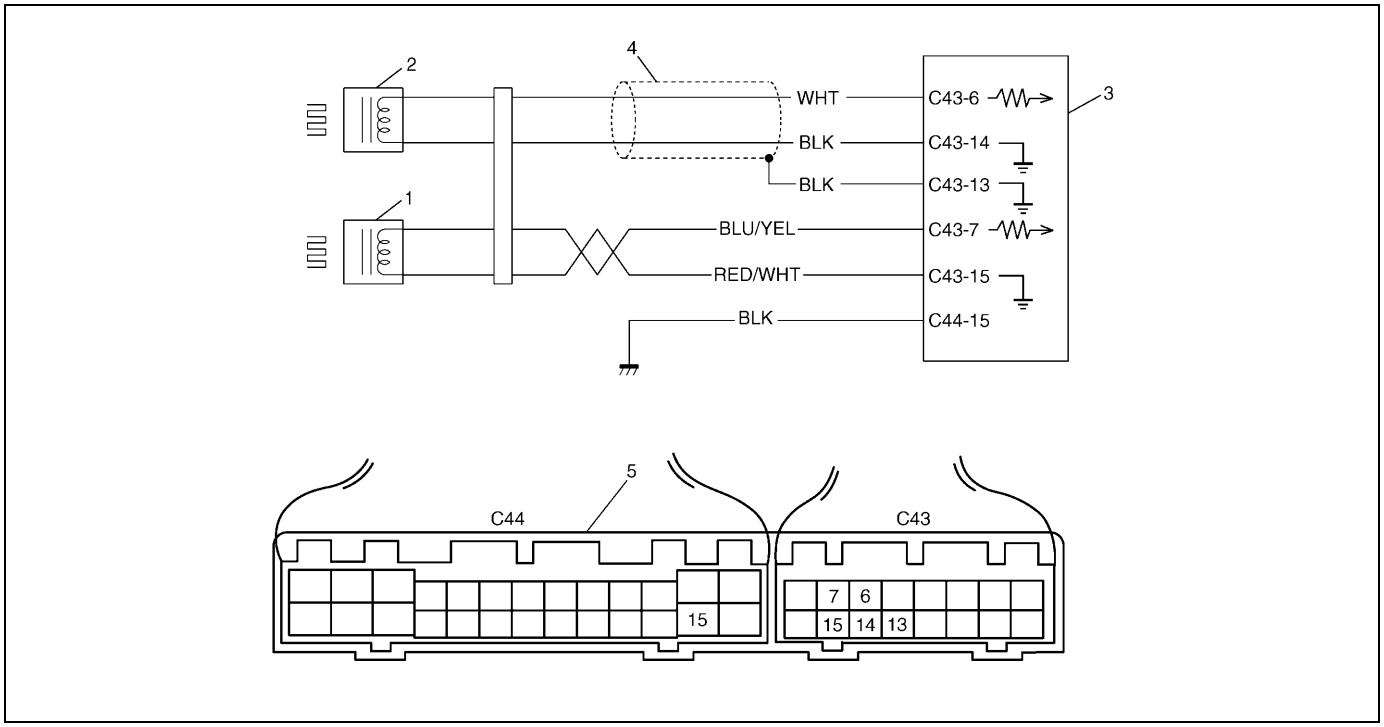

1. Input shaft speed sensor	4. Shield wire
2. Output shaft speed sensor	5. TCM coupler (viewed from harness side)
3. TCM	

DTC DETECTING CONDITION
• Difference in detected revolution between input shaft speed sensor and output shaft speed sensor too wide.

Step	Action	Yes	No
1	Check if DTC P0730 (DTC No.18) displayed with DTC P0715 (DTC No.14) or DTC P0720 (DTC No.31). Is DTC P0730 (DTC No.18) displayed with DTC P0715 (DTC No.14) or DTC P0720 (DTC No.31)? (See figure.)	Inspect according to DTC P0715 (DTC No.14) or DTC P0720 (DTC No.31) flow table first.	Go to Step 2.
2	1) Turn ignition switch OFF and disconnect TCM couplers. 2) Measure resistance between terminal “C43-13” of the disconnected harness side coupler and body ground. Is it about 0 Ω? (See figure.)	Short in between shield portion or “BLK” wire and ground.	Go to Step 3.

Step	Action	Yes	No
3	Check input shaft speed sensor and output shaft speed sensor referring to each item in this section. Are they OK? (See figure.)	• Broken wire in shield portion or broken “BLK” wire, or shorted to power source circuit. • Malfunction of A/T itself (over revolving of C0 clutch drum by departing of C0 clutch drum snap ring, clutch slipping, etc.) If all the above are in good condition, substitute a known-good TCM and recheck.	Inspect and replace referring to each item in this section.

Figure for Step 1

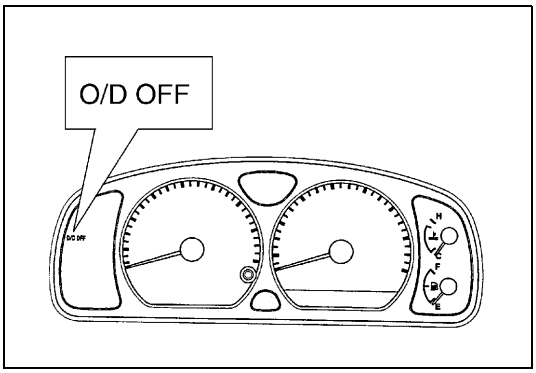

Figure for Step 2

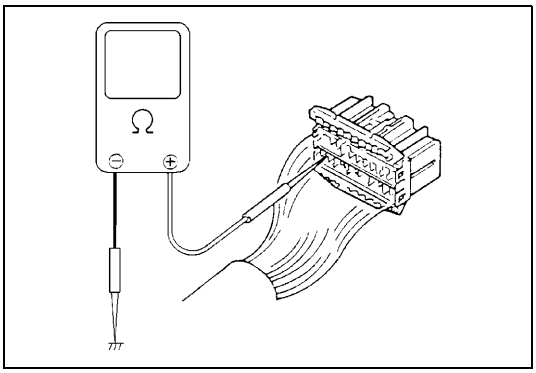

Figure for Step 3

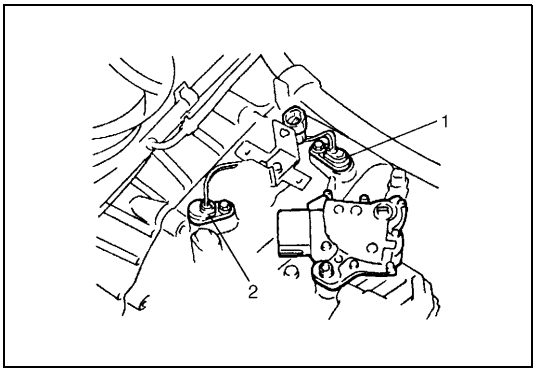

1.	Output shaft speed sensor
2.	Input shaft speed sensor

DTC P0753 (DTC NO.21/22) SHIFT SOLENOID-A (NO.1) ELECTRICAL
DTC P0758 (DTC NO.23/24) SHIFT SOLENOID-B (NO.2) ELECTRICAL
DTC P0743 (DTC NO.25/26) TCC (LOCK-UP CLUTCH) SYSTEM ELECTRICAL

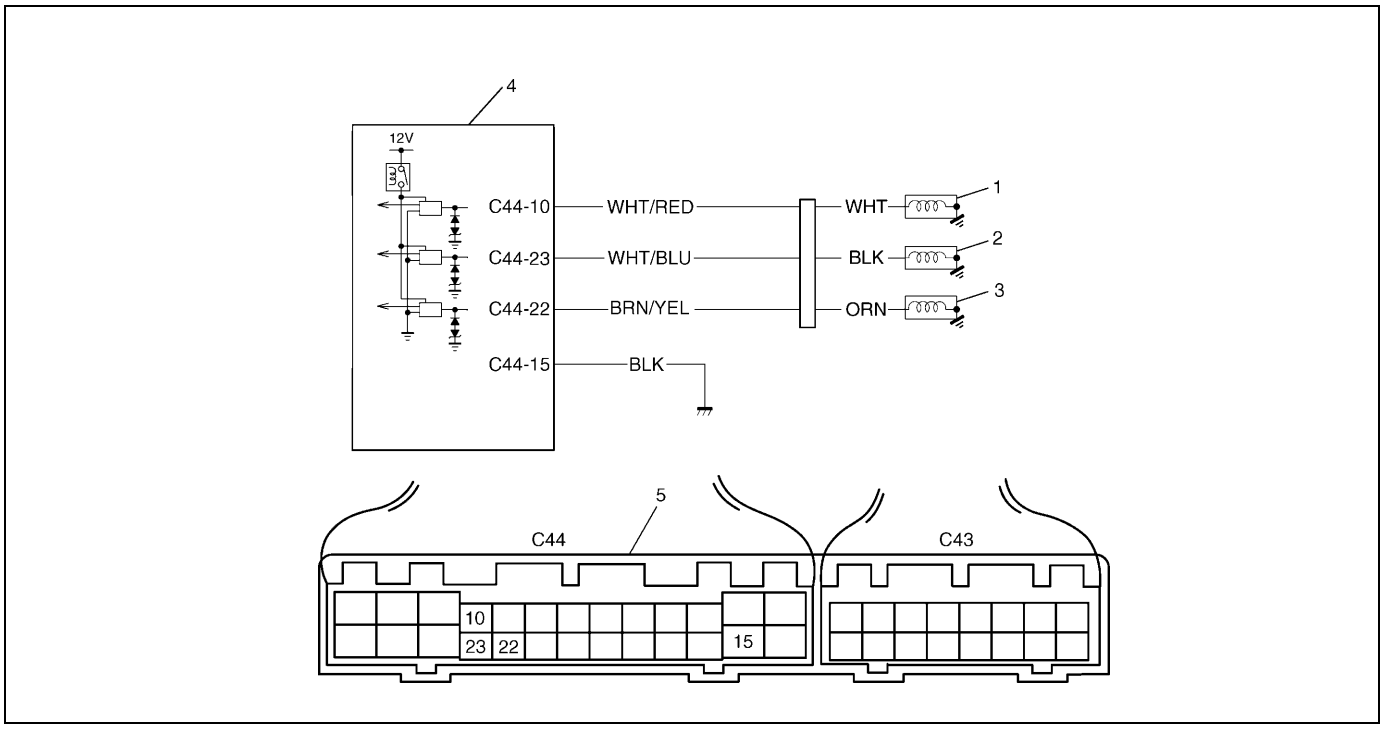

1. Shift solenoid-A (No.1)	4. TCM
2. Shift solenoid-B (No.2)	5. TCM coupler (viewed from harness side)
3. TCC (lock-up) solenoid	

DTC DETECTING CONDITION
• Solenoid output voltage too high although TCM orders solenoid to turn OFF.
• Solenoid output voltage too low although TCM orders solenoid to turn ON.

Step	Action	Yes	No
1	1) Turn ignition switch OFF and disconnect solenoid coupler. 2) Measure the resistance between each solenoid terminal of the solenoid side coupler and transmission ground. Is it 11 – 15 Ω? (See figure.)	Go to Step 2.	• Solenoid lead wire open or shorted to ground. • Malfunction of solenoid.
2	Is DTC No.22, 24 or 26?	Go to Step 4.	Go to Step 3.
3	Is DTC No.21, 23 or 25?	Go to Step 6.	Go to Step 5. (When DTC is P0753, P0758 or P0743.)
4	1) Disconnect TCM couplers. 2) Measure the resistance between terminal “C44-10”, “C44-23” or “C44-22” of the disconnected harness side TCM coupler and body ground. Is it about 0 Ω? (See figure.)	“WHT/RED”, “WHT/BLU” or “BRN/YEL” wire shorted to ground.	Substitute a known-good TCM and recheck.

Step	Action	Yes	No
5	1) Disconnect TCM couplers. 2) Measure the resistance between terminal "C44-10", "C44-23" or "C44-22" of the disconnected harness side TCM coupler and body ground. Is it about 0 Ω? (See figure.)	"WHT/RED", "WHT/BLU", or "BRN/YEL" wire shorted to ground.	Go to Step 6.
6	1) Connect solenoid coupler then disconnect TCM couplers. 2) Measure the resistance between each solenoid terminal of the disconnected harness side TCM coupler and body ground. Is it 10.5 – 15.5 Ω?	Go to Step 7.	"WHT/RED", "WHT/BLU" or "BRN/YEL" wire open or poor connection of shift solenoid coupler.
7	Turn ignition switch ON then measure voltage between terminal "C44-10", "C44-23" or "C44-22" of the disconnected harness side TCM coupler and body ground. Is it about 0 V?	Poor connection at terminal "C44-10", "C44-23" or "C44-22" of TCM. If all the above are in good condition, substitute a known-good TCM and recheck.	"WHT/RED", "WHT/BLU" or "BRN/YEL" wire or shift solenoid lead wire shorted to power source circuit.

Solenoid	TCM Terminal Number	Lead Wire Color (between TCM and solenoid coupler)
Shift solenoid -A (No.1)	C44-10	WHT/RED
Shift solenoid -B (No.2)	C44-23	WHT/BLU
TCC solenoid (Lock-up solenoid)	C44-22	BRN/YEL

Figure for Step 1

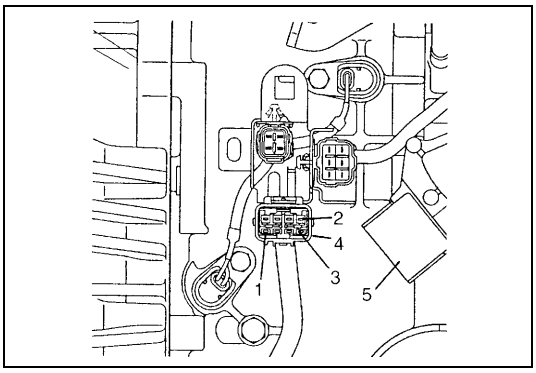

1. Shift solenoid -A (No.1) terminal
2. Shift solenoid -B (No.2) terminal
3. TCC (Lock-up) solenoid terminal
4. Solenoid coupler
5. Transmission range sensor (Shift switch)

Figure for Step 4, 5, 6, 7

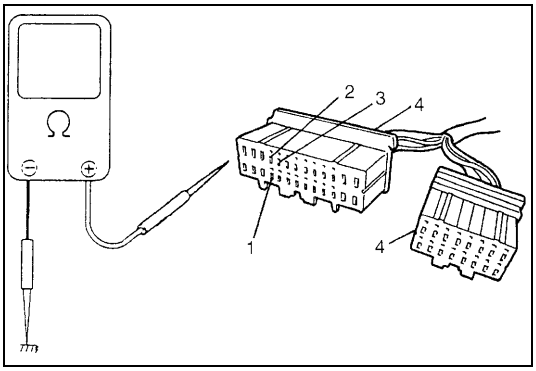

1. "C44-10" terminal
2. "C44-23" terminal
3. "C44-22" terminal
4. TCM couples

DTC P0741 (DTC NO.29) TCC (LOCK-UP) SOLENOID PERFORMANCE OR STUCK OFF

Step	Action	Yes	No
1	Was “AUTOMATIC TRANSMISSION DIAGNOSTIC FLOW TABLE” performed?	Go to Step 2.	Go to “AUTOMATIC TRANSMISSION DIAGNOSTIC FLOW TABLE”.
2	Check TCC (lock-up) solenoid referring to “SHIFT SOLENOID VALVES” in this section. Is it in good condition?	Go to Step 3.	Replace TCC (lock-up) solenoid.
3	Check valve body for fluid passage clog, or lock-up control valve, secondary regulator valve or signal valve stuck, referring to “TRANSMISSION UNIT REPAIR OVERHAUL” in this section. Are they in good condition?	Go to Step 4.	Faulty valve body.
4	Substitute a known-good torque converter and recheck. Is it OK?	Torque converter malfunction.	Overhaul and repair automatic transmission.

DTC DETECTING CONDITION
• Difference between turbine rev. and engine rev. too close even though TCM ordered to turn OFF lock-up. • Difference between turbine rev. and engine rev. too wide even though TCM ordered to turn ON lock-up.

DTC P0720 (DTC NO. 31) OUTPUT SHAFT SPEED SENSOR CIRCUIT MALFUNCTION

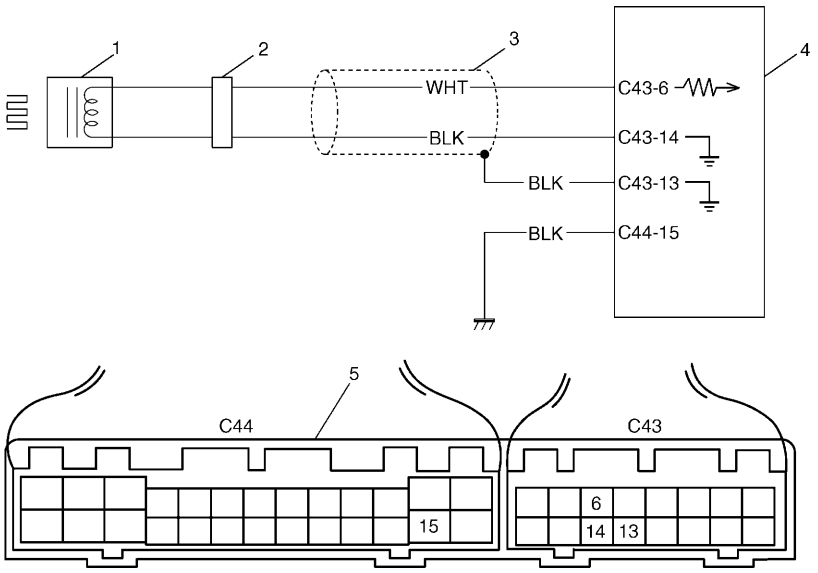

1. Output shaft speed sensor (A/T VSS)	4. TCM
2. Coupler	5. TCM coupler (viewed from harness side)
3. Shield wire	

DTC DETECTING CONDITION
• Output shaft speed sensor signal voltage too high or too low.

Step	Action	Yes	No
1	1) Turn ignition switch OFF and disconnect output shaft speed sensor – input shaft speed sensor coupler. (See figure.) 2) Measure the resistance between terminals of disconnected sensor side coupler. Is it 160 – 200 Ω? (See figure.)	Go to Step 2.	Replace output shaft speed sensor.
2	1) Connect output shaft speed sensor coupler then disconnect TCM couplers. 2) Measure resistance between terminal “C43-6” and “C43-14” of disconnected harness side coupler. Is it 160 – 200 Ω? (See figure.)	Go to Step 3.	“WHT” or “BLK” wire open or shorted each other.

Step	Action	Yes	No
3	1) Turn ignition switch OFF and disconnect output shaft speed sensor – input shaft speed sensor coupler. (See figure.) 2) Measure resistance between terminal “3” (of disconnected sensor side coupler) and body ground then terminal “4” (of disconnected sensor side coupler) and body ground. Is it about 0 Ω? (See figure.)	Replace output shaft speed sensor.	Go to Step 4.
4	1) Turn ignition switch OFF and connect output shaft speed sensor coupler then disconnect TCM couplers. 2) Measure resistance between terminal “C43-6” (of disconnected harness side coupler) and body ground then terminal “C43-14” (of disconnected harness side coupler) and body ground. Is it about 0 Ω? (See figure.)	“WHT” or “BLK” wire shorted to ground.	Go to Step 5.
5	Measure resistance between terminal “C43-6” and “C43-13” (of disconnected harness side coupler) then terminal “C43-14” and “C43-13” (of disconnected harness side coupler). Is it about 0 Ω? (See figure.)	“WHT” wire or “BLK” wire shorted to shield portion.	Poor connection of terminal “C43-6” or “C43-14” of the TCM. If all the above are in good condition, substitute a known-good TCM and recheck.

Figure for Step 1, 2

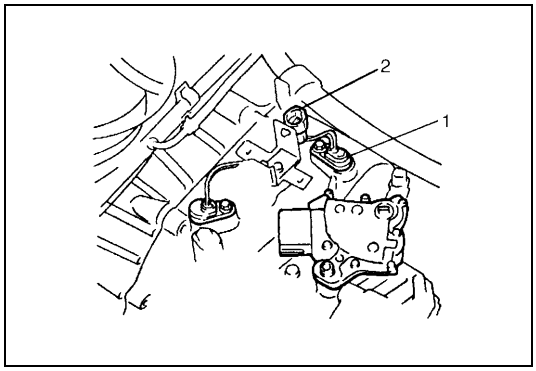

1.	Output shaft speed sensor
2.	Input shaft speed sensor coupler

Figure for Step 2, 3

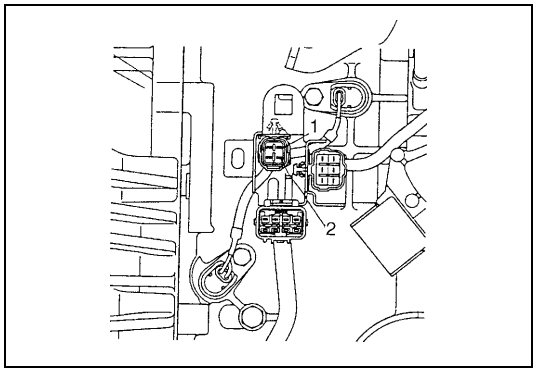

1.	Terminal “3”
2.	Terminal “4”

Figure for Step 2, 5

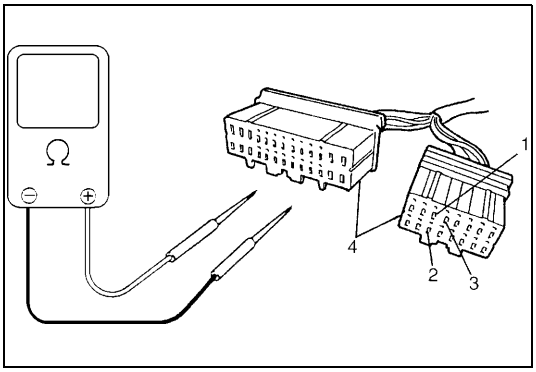

1.	“C43-14” terminal
2.	“C43-6” terminal
3.	“C43-13” terminal
4.	TCM coupler

Figure for Step 4

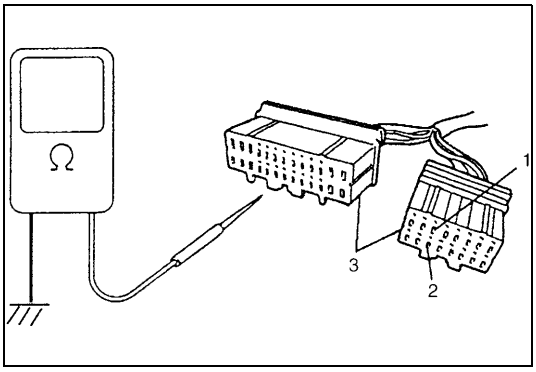

1.	“C43-14” terminal
2.	“C43-6” terminal
3.	TCM coupler

DTC P1700 (DTC NO.32/33) THROTTLE POSITION SIGNAL INPUT MALFUNCTION

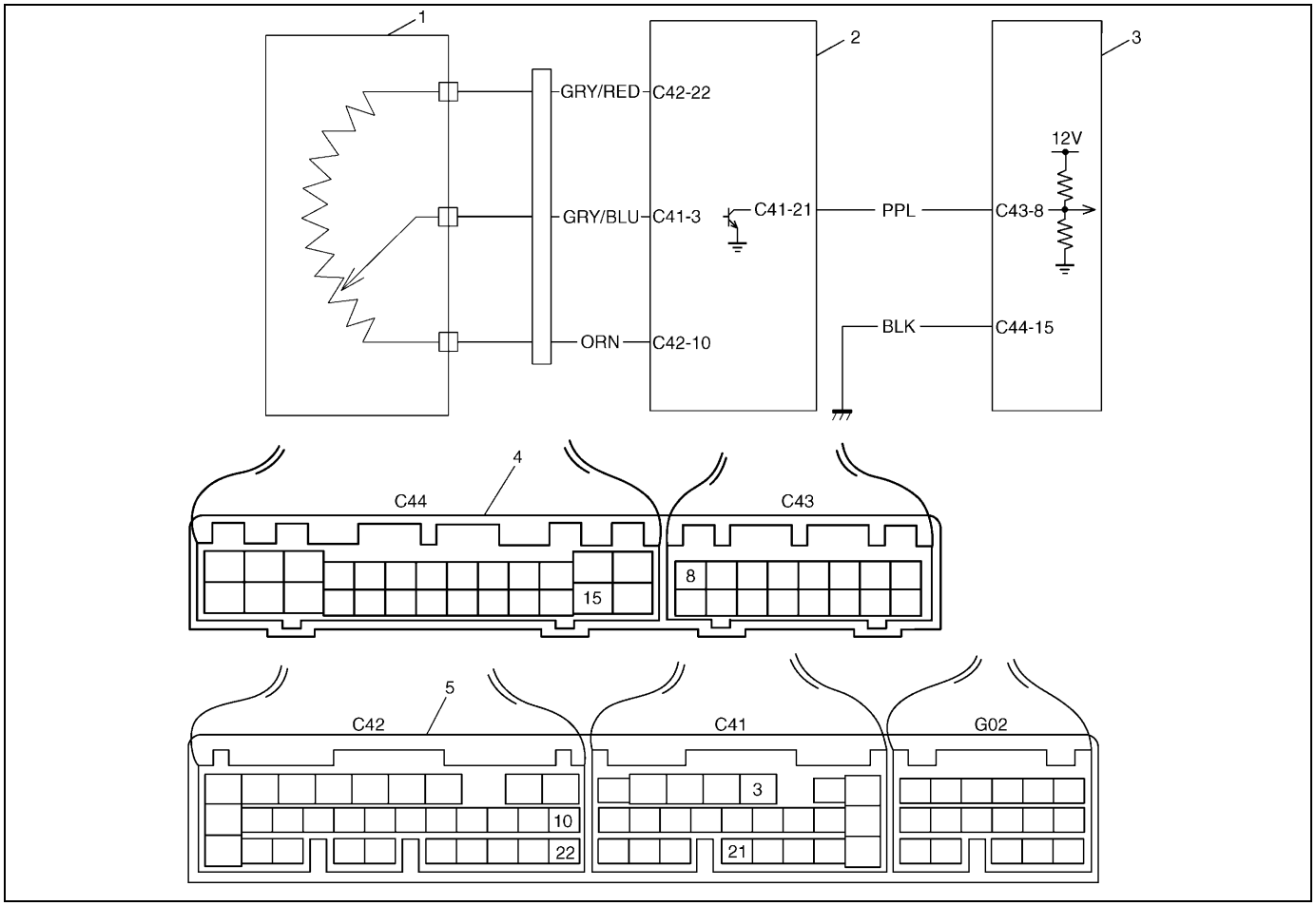

1. Throttle position (TP) sensor	4. TCM coupler (viewed from harness side)
2. ECM	5. ECM coupler (viewed from harness side)
3. TCM	

DTC DETECTING CONDITION
• NO or abnormal throttle opening signal inputted.

Step	Action	Yes	No
1	Check DTC of “ENGINE DIAGNOSIS” referring to Section 6. Is there DTC related to throttle position sensor detected?	Inspect and repair referring to DTC flow table of “ENGINE DIAGNOSIS” in Section 6.	Go to Step 2.
2	Is DTC No.33?	Go to Step 4.	Go to Step 3.
3	Is DTC No.32?	Go to Step 5.	Go to Step 5. (When DTC is P1700.)
4	1) Turn ignition switch OFF and disconnect ECM couplers. 2) Turn ignition switch ON and check voltage between terminal “C41-21” of disconnected harness side ECM coupler and body ground. Is it 10 – 14 V?	Poor connection of terminal “C41-21” of ECM coupler. If connection is OK, substitute a known-good ECM and recheck.	“PPL” wire open or poor connection of terminal “C43-8” of TCM coupler. If wire and connection are OK, substitute a known-good TCM and recheck.

Step	Action	Yes	No
5	1) Turn ignition switch OFF and disconnect ECM couplers. 2) Turn ignition switch ON and check voltage between terminal “C41-21” of disconnected harness side ECM coupler and body ground. Is it 10 – 14 V?	Go to Step 7.	Substitute a known-good TCM and recheck.
6	1) Check for proper connection of terminal “C41-21” of ECM coupler. 2) If OK, turn ignition switch OFF and disconnect ECM couplers. 3) Turn ignition switch ON and check voltage between terminal “C41-21” of disconnected harness side ECM coupler and body ground. Is it 10 – 14 V?	Go to Step 7.	“PPL” wire open or poor connection of terminal “C43-8” of TCM coupler. If wire and connection are OK, substitute a known-good TCM and recheck.
7	1) Turn ignition switch OFF and disconnect TCM couplers. 2) Check resistance between terminal “C43-8” of disconnected harness side TCM coupler and body ground. Is it infinity?	Intermittent trouble or faulty ECM. Check for intermittent referring to “INTERMITTENT AND POOR CONNECTION” in Section 0A. If no trouble found, substitute a known-good ECM and recheck.	“PPL” wire shorted to ground.

DTC P0705 (DTC NO.34) TRANSMISSION RANGE SENSOR (SWITCH) CIRCUIT MALFUNCTION

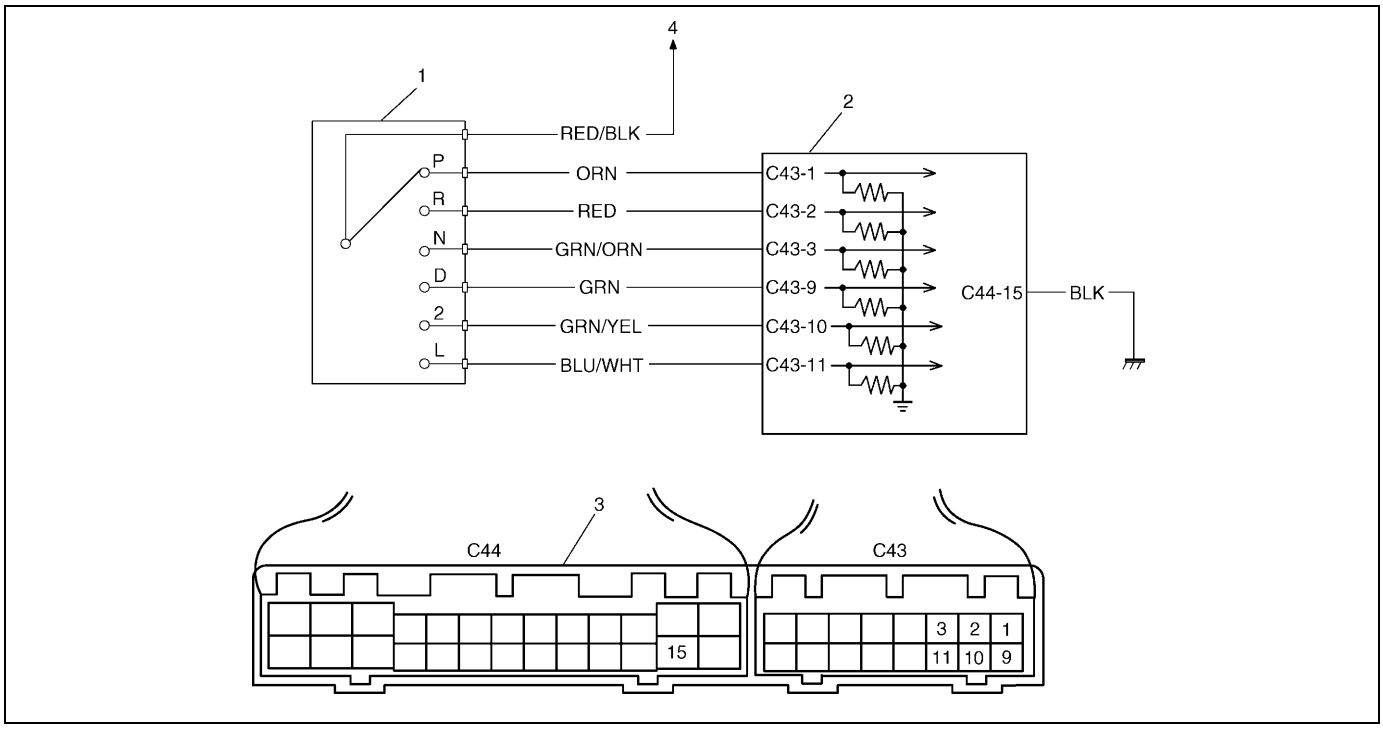

1. Transmission range sensor (shift switch)	3. TCM coupler (viewed from harness side)
2. TCM	4. Power source

DTC DETECTING CONDITION
• No shift switch signal inputted or two or more shift switch signals inputted at the same time.

Step	Action	Yes	No
1	1) Turn ignition switch OFF, disconnect TCM coupler. 2) Turn ignition switch ON, check voltage between terminal “C43-1” and “C44-15” of disconnected harness side TCM coupler. Is it 10 – 14 V at “P” range and 0 V at the other range?	Go to Step 2.	Go to Step 7.
2	While ignition switch ON, check voltage between terminal “C43-2” and “C44-15” of disconnected harness side TCM coupler. Is it 10 – 14 V at “R” range and 0 V at the other range?	Go to Step 3.	Go to Step 7.
3	While ignition switch ON, check voltage between terminal “C43-3” and “C44-15” of disconnected harness side TCM coupler. Is it 10 – 14 V at “N” range and 0 V at the other range?	Go to Step 4.	Go to Step 7.
4	While ignition switch ON, check voltage between terminal “C43-9” and “C44-15” of disconnected harness side TCM coupler. Is it 10 – 14 V at “D” range and 0 V at the other range?	Go to Step 5.	Go to Step 7.

Step	Action	Yes	No
5	While ignition switch ON, check voltage between terminal “C43-10” and “C44-15” of disconnected harness side TCM coupler. Is it 10 – 14 V at “2” range and 0 V at the other range?	Go to Step 6.	Go to Step 7.
6	While ignition switch ON, check voltage between terminal “C43-11” and “C44-15” of disconnected harness side TCM coupler. Is it 10 – 14 V at “L” range and 0 V at the other range?	Intermittent trouble or faulty TCM. Check for intermittent trouble referring to “INTERMITTENT AND POOR CONNECTION” in Section 0B.	Go to Step 7.
7	Check transmission range sensor referring in this section. Is it OK?	Transmission range sensor wire shorted. If wire harnesses are OK, substitute a known-good TCM and recheck.	Replace transmission range sensor.

DTC P0725 (DTC NO.35) ENGINE SPEED INPUT CIRCUIT MALFUNCTION

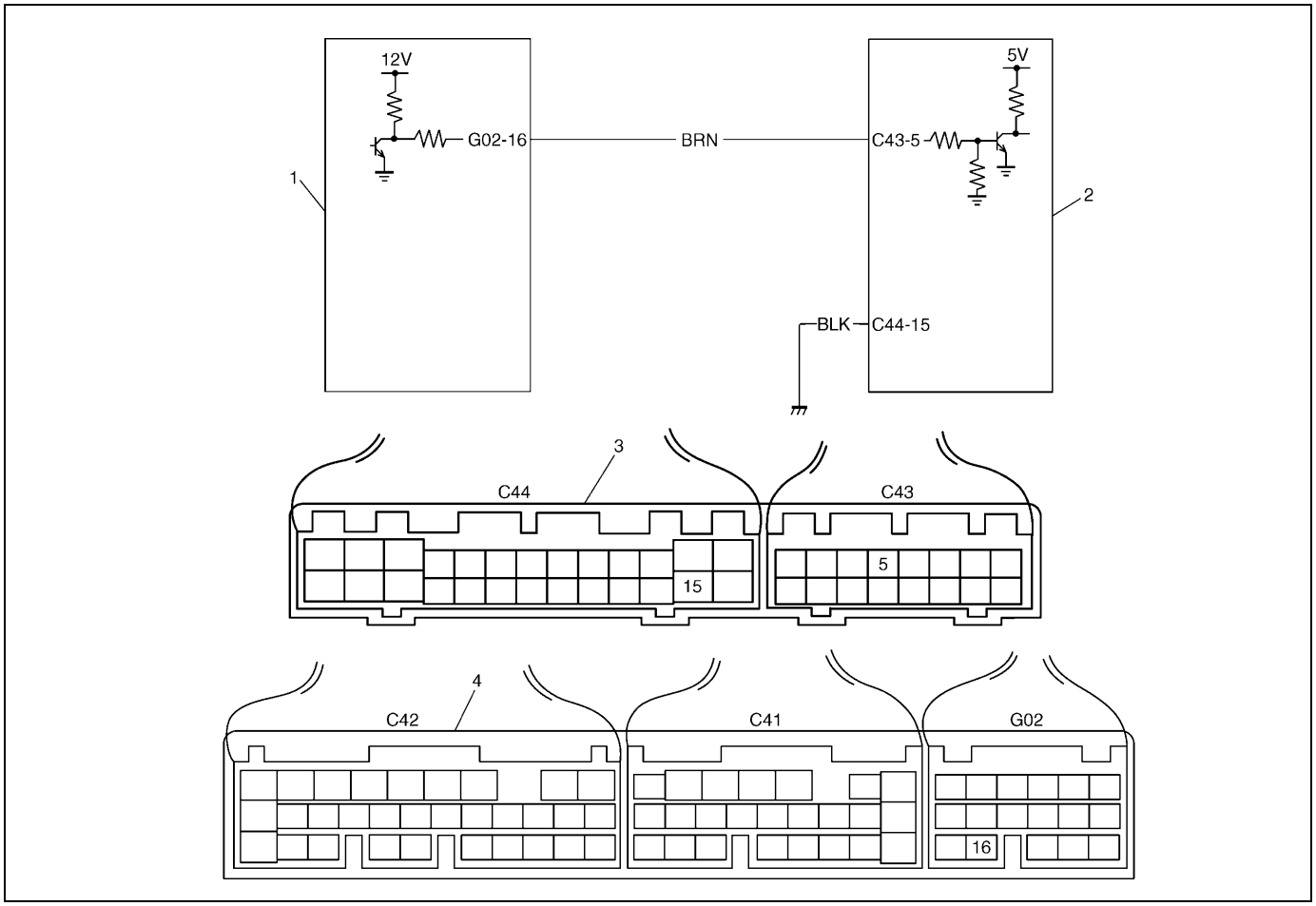

1. ECM	3. TCM coupler (viewed from harness side)
2. TCM	4. ECM coupler (viewed from harness side)

DTC DETECTING CONDITION
• Inputted engine rev. signal too low or too high.

Step	Action	Yes	No
1	Check DTC of “ENGINE DIAGNOSIS” referring to Section 6. Is there DTC related to engine speed sensor?	Inspect and repair referring to DTC flow table of “ENGINE DIAGNOSIS” in Section 6.	Go to Step 2.
2	1) Turn ignition switch OFF and disconnect ECM or TCM couplers. 2) Measure resistance between terminal “G02-16” and “C43-5” of disconnected harness side coupler. Is it about 0 Ω?	Go to Step 3.	“BRN” wire open.
3	Measure resistance between terminal “C43-5” of disconnected harness side coupler and body ground. Is it infinity?	Go to Step 4.	“BRN” wire shorted to ground

Step	Action	Yes	No
4	1) Turn ignition switch OFF and connect ECM couplers. 2) Turn ignition switch ON and measure voltage between terminal “C43-5” of disconnected harness side TCM coupler and body ground. Is it 10 – 14 V?	Intermittent trouble or faulty ECM or TCM. Check for intermittent referring to “INTERMITTENT AND POOR CONNECTION” in Section 0A. If no trouble found, substitute a known-good ECM or TCM and recheck.	“BRN” wire is shorted to power circuit or faulty ECM. If “BRN” wire is OK, substitute a known-good ECM and recheck.

DTC P0710 (DTC No.36/38) TRANSMISSION TEMPERATURE SENSOR CIRCUIT MALFUNCTION

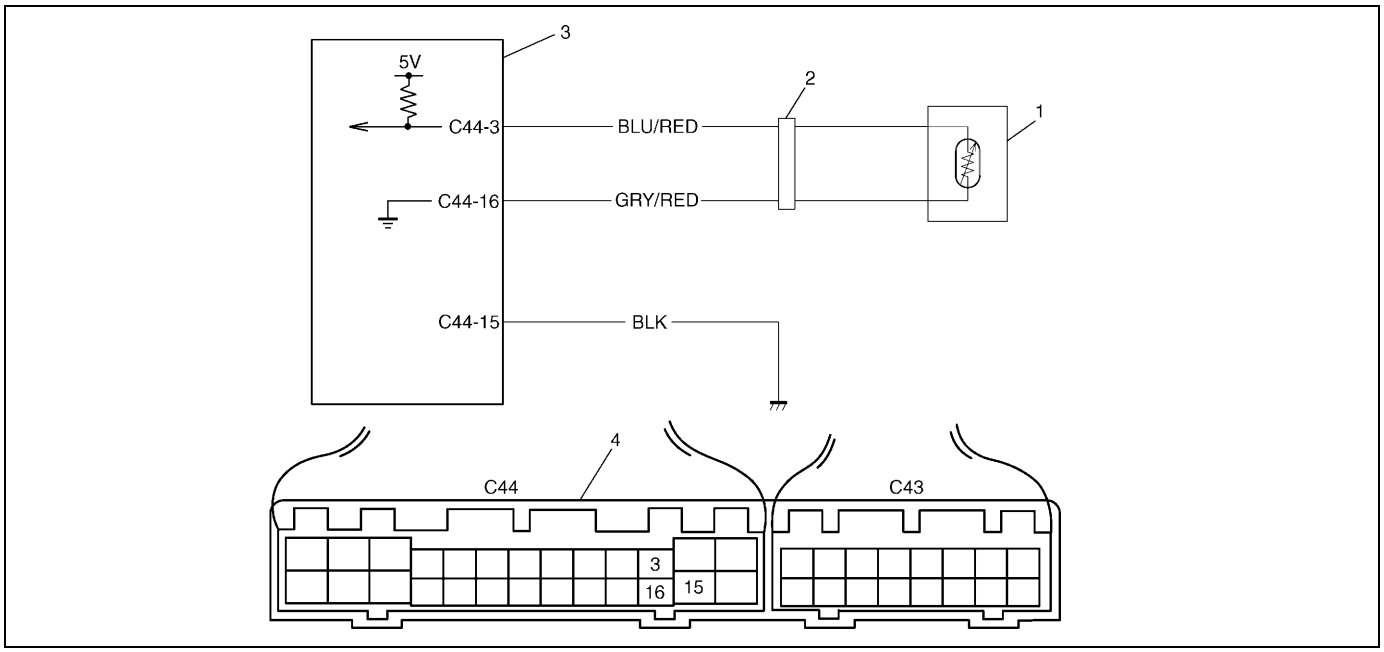

1. Transmission temperature sensor	3. TCM
2. Coupler	4. TCM coupler (viewed from harness side)

DTC DETECTING CONDITION
• A/T fluid temperature signal input voltage too low. • A/T fluid temperature signal input voltage does not go down although standard value of engine rev. signal input.

Step	Action	Yes	No
1	1) Turn ignition switch OFF and disconnect sensor wire harness coupler. 2) Measure resistance between “BLU/RED” wire and “GRY/RED” wire terminal of sensor side coupler. Is it infinity or 0 Ω?	Faulty transmission temperature sensor. Replace transmission temperature sensor.	Go to Step 2.
2	Is DTC No.36?	Go to Step 4.	Go to Step 3.
3	Is DTC No.38?	Go to Step 5.	Go to Step 6. (When DTC is P0710.)
4	1) Turn ignition switch OFF and connect sensor wire harness coupler. 2) Disconnect TCM couplers. 3) Measure the resistance between terminal “C44-3” and “C44-16” of disconnected harness side coupler. Is it about 0 Ω?	“BLU/RED” and “GRY/RED” wire shorted each other.	Substitute a known-good TCM and recheck.

Step	Action	Yes	No
5	1) Turn ignition switch OFF and connect sensor wire harness coupler. 2) Disconnect TCM couplers. 3) Measure the resistance between terminal "C44-3" and "C44-16" of disconnected harness side coupler. Is it infinity?	"BLU/RED" or "GRY/RED" wire open or poor connection of solenoid wire harness coupler.	Go to Step 7.
6	1) Turn ignition switch OFF and connect sensor wire harness coupler. 2) Disconnect TCM couplers. 3) Measure the resistance between terminal "C44-3" and "C44-16" of disconnected harness side coupler. Is it about 0 Ω or infinity?	"BLU/REDl" or "GRY/RED" wire open, shorted each other or poor connection of solenoid wire harness coupler.	Go to Step 7.
7	1) Turn ignition switch OFF and connect TCM couplers. 2) Disconnect solenoid wire harness coupler. 3) Turn ignition switch ON then measure voltage between "BLU/RED" wire terminal of disconnected harness side coupler and engine ground. (See figure.) Is it 4 – 6 V?	Intermittent trouble or faulty TCM. Check for intermittent referring to "INTERMITTENT AND POOR CONNECTION" in Section 0A. If no trouble found, substitute a known-good TCM and recheck.	"BLU/RED" wire shorted to power circuit or poor connection of terminal "C44-3". If wire and connection are OK, substitute a known-good TCM.

Figure for Step 7

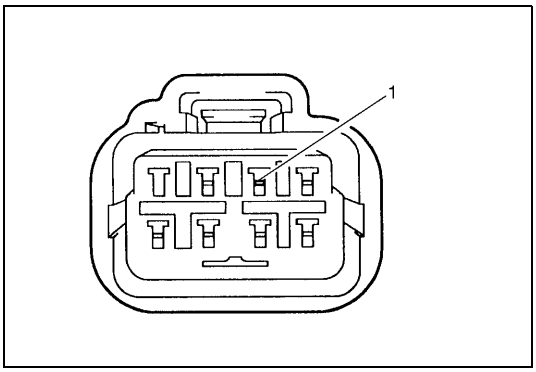

1. BLU/RED wire terminal

DTC P0763 (DTC NO.43) SHIFT SOLENOID-C (NO.3) ELECTRICAL
DTC P0768 (DTC NO.45) SHIFT SOLENOID-B (NO.4) ELECTRICAL
DTC P0773 (DTC NO.48) SHIFT SOLENOID-E (NO.5) ELECTRICAL

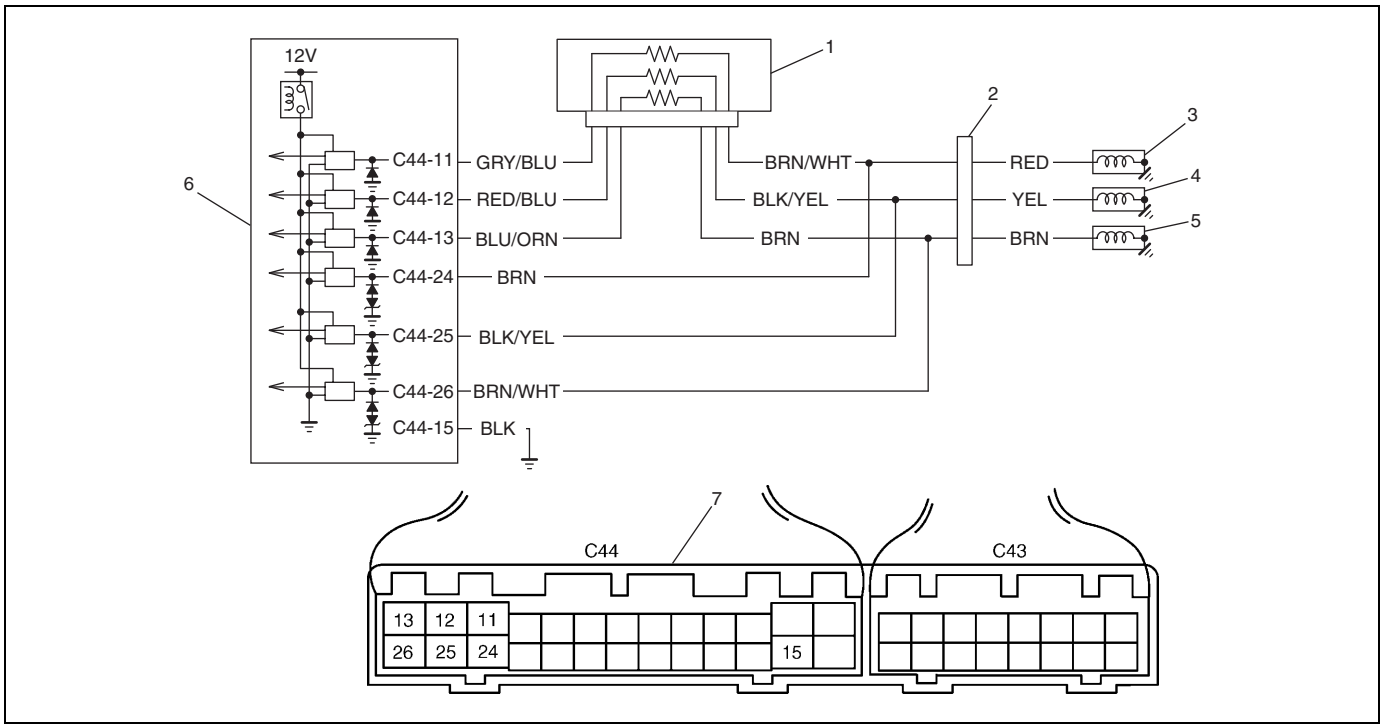

1. Dropping resistor	4. Shift solenoid-D (No.4)	7. TCM coupler (viewed from harness side)
2. solenoid coupler	5. Shift solenoid-E (No.5)	
3. Shift solenoid-C (No.3)	6. TCM	

DTC DETECTING CONDITION
• Solenoid output voltage too high or too low differently from TCM order.

Step	Action	Yes	No
1	1) Turn ignition switch OFF and disconnect solenoid coupler. 2) Measure resistance between terminal of solenoid coupler and transmission ground. (See figure.) Is it 2.5 – 3.5 Ω?	Go to Step 2.	• Solenoid lead wire open or shorted to ground. • Malfunction of solenoid valve.
2	1) Disconnect TCM couplers. 2) Measure resistance between terminal of disconnected body side solenoid coupler and terminal “C44-11”, “C44-12” or “C44-13” of disconnected harness side TCM coupler. (See chart.) Is it 6.5 – 8.5 Ω?	Go to Step 3.	Inspect dropping resister referring to “DROPPING RESISTOR” in this section. If OK, circuit between TCM and dropping resister or dropping resister and solenoid coupler open.
3	Check continuity between terminal “C44-24”, “C44-25” or “C44-26” of disconnected TCM coupler and terminal of disconnected body side solenoid coupler. (See chart.) Is there continuity?	Go to Step 4.	Circuit between TCM and solenoid coupler open.

Step	Action	Yes	No
4	Check continuity between terminal of disconnected body side solenoid coupler and transmission ground with TCM, dropping resister and solenoid couplers disconnected. Is there continuity?	Circuit between TCM and transmission shorted to ground.	Go to Step 5.
5	Check continuity between terminal of disconnected body side dropping resistor coupler and transmission ground. (See chart.) Is there continuity?	Circuit between TCM and dropping resister is shorted to ground.	Intermittent trouble or faulty TCM. Check for intermittent referring to “INTERMITTENT AND POOR CONNECTION” in Section 0A. If no trouble found, substitute a known-good TCM and recheck.

Chart for Step 2

Solenoid	TCM terminal No.	Solenoid coupler lead wire color (body side)
C (No.3)	C44-11	BRN
D (No.4)	C44-12	BLK/YEL
E (No.5)	C44-13	BRN/WHT

Chart for Step 3

Solenoid	TCM terminal No.	Solenoid coupler lead wire color (body side)
C (No.3)	C44-24	BRN
D (No.4)	C44-25	BLK/YEL
E (No.5)	C44-26	BRN/WHT

Chart for Step 5

Solenoid	TCM terminal No.	Dropping resistor lead wire color (body side)
C (No.3)	C44-11	GRY/BLU
D (No.4)	C44-12	RED/BLU
E (No.5)	C44-13	BLU/ORN

Figure for Step 1 and 5

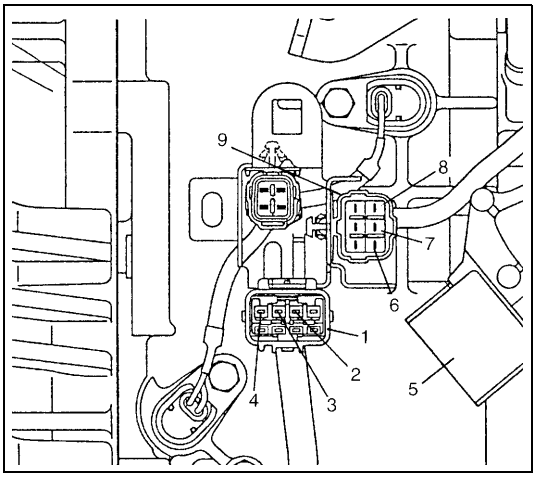

1. Solenoid coupler
2. Terminal for shift solenoid-C (No.3)
3. Terminal for shift solenoid-D (No.4)
4. Terminal for shift solenoid-E (No.5)
5. Transmission range sensor (Shift switch)
6. Dropping resistor terminal for shift solenoid-C (No.3)
7. Dropping resistor terminal for shift solenoid-D (No.4)
8. Dropping resistor terminal for shift solenoid-E (No.5)
9. Dropping resistor coupler

DTC P1709 (DTC NO.51) ENGINE COOLANT TEMPERATURE/BAROMETRIC PRESSURE SIGNAL CIRCUIT

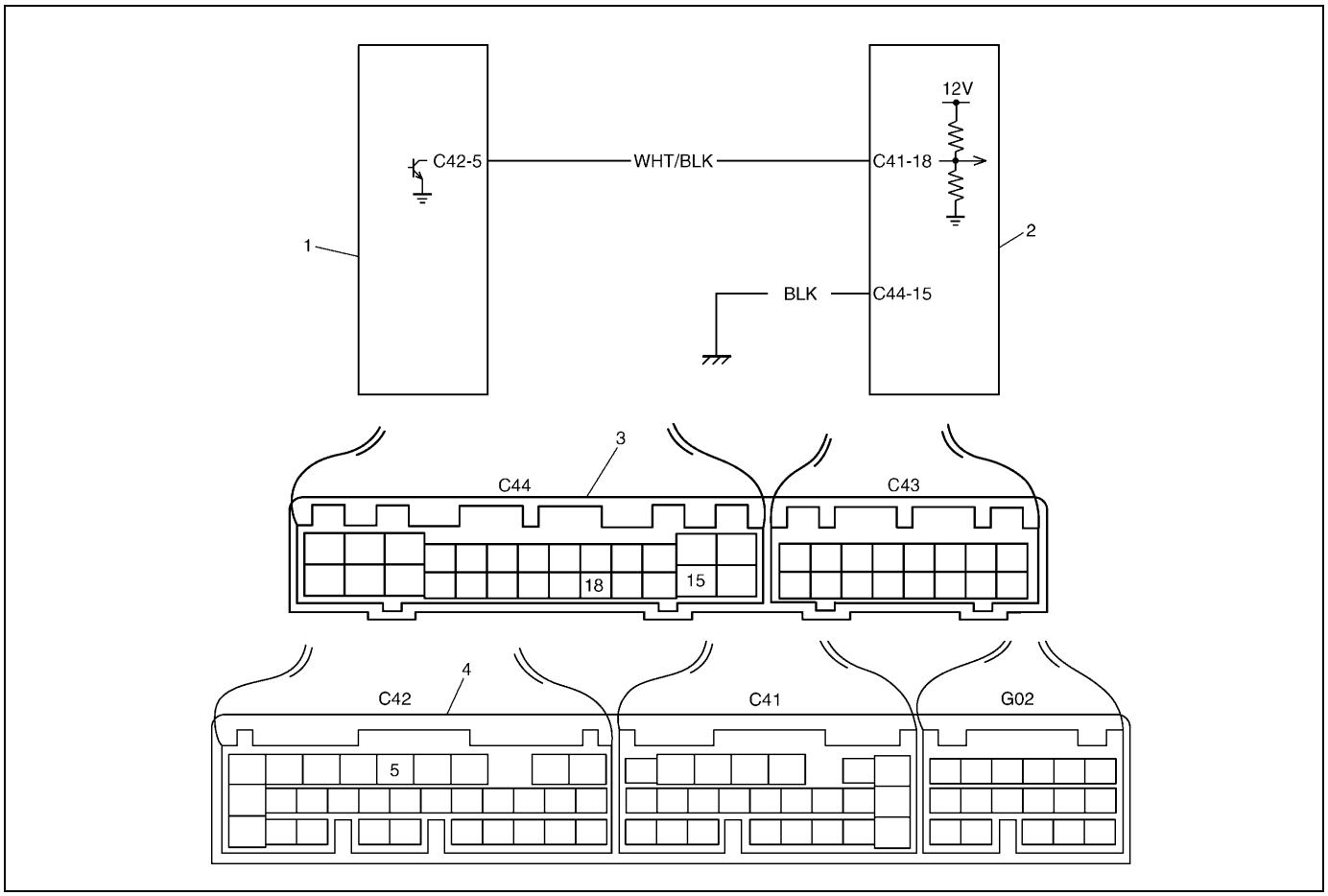

1. ECM	3. TCM coupler (viewed from harness side)
2. TCM	4. ECM coupler (viewed from harness side)

DTC DETECTING CONDITION
• Engine coolant temperature/barometric pressure signal voltage too low although A/T fluid temperature is normal operating temperature and engine rev. is standard.

Step	Action	Yes	No
1	Check DTC referring to “ENGINE DIAGNOSIS” in Section 6. Is any DTC detected?	Inspect and repair referring to DTC flow table in Section 6.	Go to Step 2.
2	1) Turn ignition switch OFF and disconnect TCM and ECM couplers. 2) Measure resistance between terminal “C44-18” of disconnected harness side TCM coupler and body ground. Is it infinity?	Go to Step 3.	“WHT/BLK” wire shorted to ground.
3	1) Turn ignition switch OFF and connect TCM couplers. 2) Turn ignition switch ON and check voltage between terminal “C44-18” and body ground. Is it 0V?	Substitute a known-good TCM and recheck.	Substitute a know-good ECM and recheck.

DTC P0702/P1702 (DTC No.52)TRANSMISSION CONTROL SYSTEM ELECTRICAL OR INTERNAL MALFUNCTION OF TCM

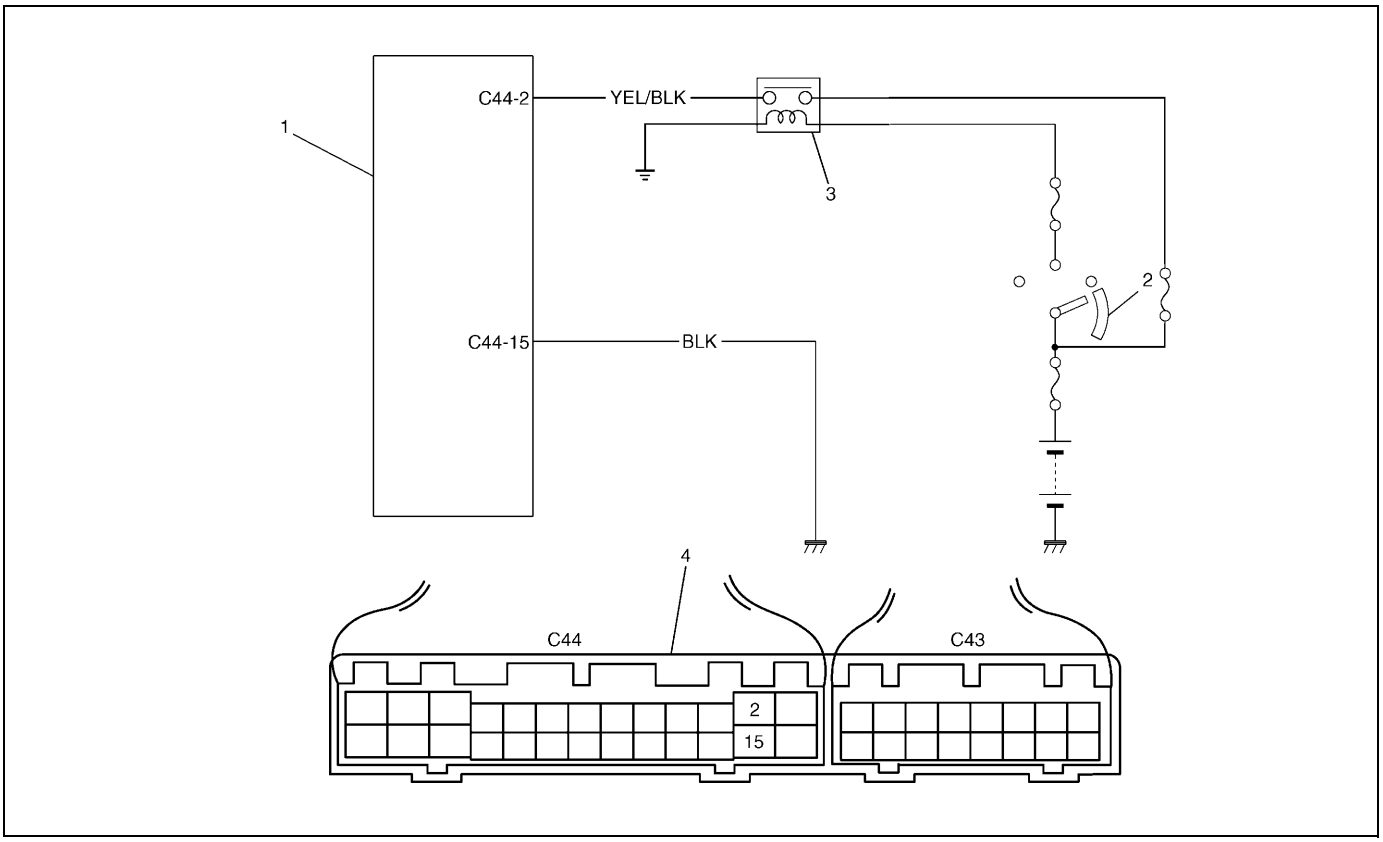

1. TCM	3. A/T relay
2. Ignition switch	4. TCM coupler (viewed from harness side)

DTC DETECTING CONDITION
• Relay output voltage too high although TCM orders the relay to turn OFF or relay output voltage too low although TCM orders the relay to turn on. • Incorrect calculations of checking TCM programmed data indicated.

Step	Action	Yes	No
1	1) Turn ignition switch ON. 2) Erase all DTCs referring to “HOW TO CLEAR DTC” in this section. 3) Turn ignition switch OFF. 4) Turn ignition switch ON once again and check for any DTC. Is it DTC P1702 (DTC No.52) or P0702 (DTC No.52)?	Replace TCM.	Could be a temporary malfunction of the TCM.

INSPECTION OF TCM AND ITS CIRCUITS

TCM and its circuits can be checked at TCM wiring couplers by measuring voltage and resistance.

CAUTION:
TCM cannot be checked by itself, it is strictly prohibited to connect voltmeter or ohmmeter to TCM with coupler disconnected from it.

INSPECTION

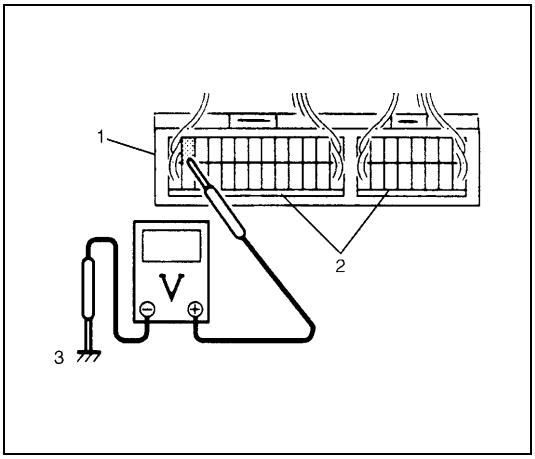

1) Remove TCM from vehicle referring to “TRANSMISSION CONTROL MODULE” in this section.
2) Connect TCM couplers to TCM.
3) Check voltage at each terminal of couplers connected.

NOTE:
As each terminal voltage is affected by the battery voltage, confirm that it is 11 V or more when ignition switch is ON.

1. TCM	3. Body ground
2. Couplers	

Terminal arrangement of TCM coupler (Viewed from harness side)

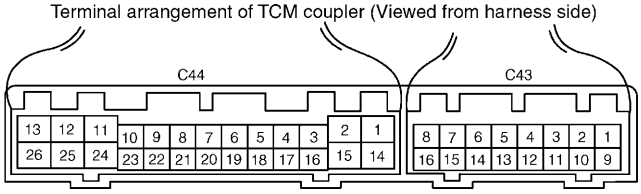

TERMINAL		CIRCUIT	STANDARD VOLTAGE	CONDITION
C43	1	Transmission range “P” switch	10 – 14 V	IG switch ON, selector lever at “P” range
			0 – 1 V	IG switch ON, selector lever other than “P” range
	2	Transmission range “R” switch	10 – 14 V	IG switch ON, selector lever at “R” range
			0 – 1 V	IG switch ON, selector lever other than “R” range
	3	Transmission range “N” switch	10 – 14 V	IG switch ON, selector lever at “N” range
			0 – 1 V	IG switch ON, selector lever other than “N” range
	4	Diagnosis switch	10 – 14 V	IG switch ON, diagnosis switch terminal not grounded
	5	Engine speed signal	0 – 1 V	IG switch ON, leaving engine OFF
	6	Output shaft speed sensor(+)	–	–
	7	Input shaft speed sensor(+)	–	–
	8	throttle opening signal	–	–
	9	Transmission range “D” switch	10 – 14 V	IG switch ON, selector lever at “D” range
			0 – 1 V	IG switch ON, selector lever other than “D” range
	10	Transmission range “2” switch	10 – 14 V	IG switch ON, selector lever at “2” range
			0 – 1 V	IG switch ON, selector lever other than “2” range
	11	Transmission range “L” switch	10 – 14 V	IG switch ON, selector lever at “L” range
			0 – 1 V	IG switch ON, selector lever other than “L” range

TERMINAL		CIRCUIT	STAN-DARD VOLTAGE	CONDITION
C43	12	Serial data link (SUZUKI scan tool)	10 – 14 V	IG switch ON
	13	Output shaft speed sensor shield	–	–
	14	Output shaft speed sensor(–)	–	–
	15	Input shaft speed sensor(–)	–	–
C44	2	IG power source	10 – 14 V	IG switch ON
	3	Transmission temperature sensor	0 – 4.5 V	IG switch ON
	4	Brake switch	10 – 14 V	IG switch ON, brake pedal depressed
	5	A/C compressor	0 – 2 V	A/C OFF
			10 – 14 V	A/C ON
	8	Idle up signal	10 – 14 V	Selector lever at “P” or “N” range
			0 – 1 V	Selector lever other than “P” or “N” range
	10	Shift solenoid-A (No.1)	0 – 1 V	IG switch ON, select lever at “P” range
	11	Shift solenoid-C (Dropping resistor)	0 – 1 V	IG switch ON, select lever at “P” range
	12	Shift solenoid-D (Dropping resistor)	10 – 14 V	IG switch ON, select lever at “P” range
	13	Shift solenoid-E (Dropping resistor)	0 – 1 V	IG switch ON, select lever at “P” range
	15	Ground	–	–
	16	Transmission temperature sensor ground	–	–
	17	O/D off switch	0 – 1 V	IG switch ON, O/D off switch ON
			10 – 14 V	IG switch ON, O/D off switch OFF
	18	Engine coolant temperature/ Barometric pressure signal	–	–
	20	A/T failure serial data	0 – 1 V	IG switch ON
	21	O/D OFF lamp	10 – 14 V	IG switch ON, O/D off switch OFF
			0 – 1 V	IG switch ON, O/D off switch ON
	22	Lock-up solenoid	0 – 1 V	IG switch ON, selector lever at “P” range
	23	Shift solenoid-B (No.2)	0 – 1 V	IG switch ON, selector lever at “P” range
	24	Shift solenoid-C (No.3)	0 – 1 V	IG switch ON, selector lever at “P” range
	25	Shift solenoid-D (No.4)	2.2 – 4.9 V	IG switch ON, selector lever at “P” range
	26	Shift solenoid-E (No.5)	0 – 1 V	IG switch ON, selector lever at “P” range

ON-VEHICLE SERVICE

MAINTENANCE SERVICE

FLUID LEVEL AT NORMAL OPERATING TEMPERATURE

INSPECTION

1) Stop vehicle and place it level.
2) Apply parking brake and place chocks against wheels.
3) With selector at P position, start engine.
4) Warm up engine till fluid temperature reaches normal operating temperature (70 – 80°C/158 – 176°F). As a guide to check fluid temperature, warm up engine to normal operating temperature.

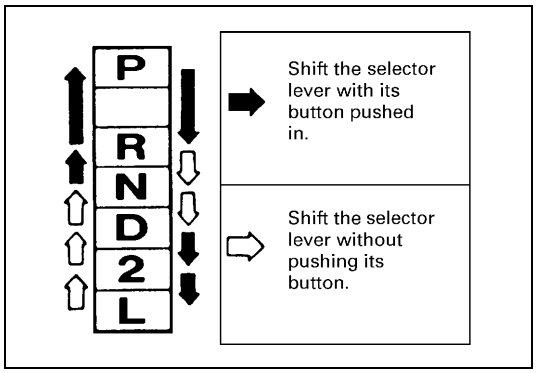

5) Keep engine idling and shift selector slowly to L and back to P position.
6) With engine idling, pull out dipstick, wipe it off with a clean cloth and put it back into place.

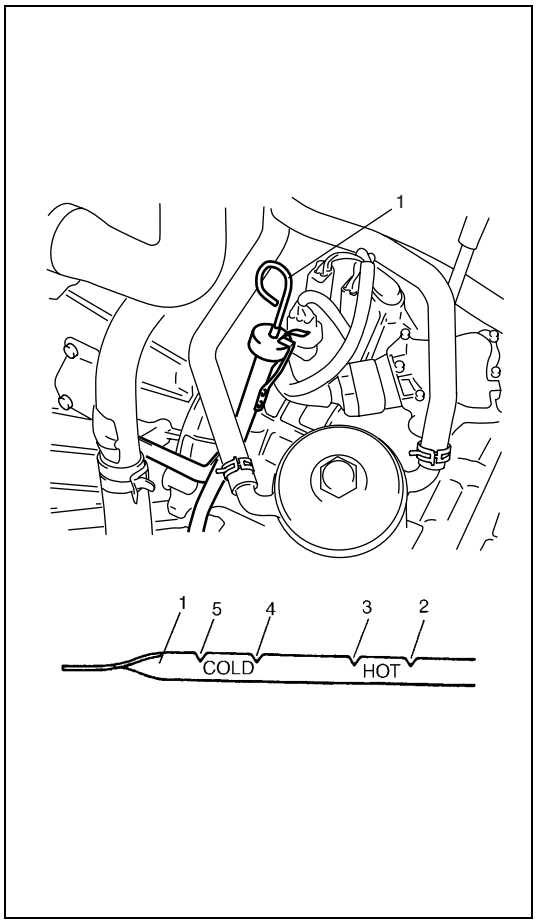

7) Pull out dipstick (1) again and check fluid level indicated on it. Fluid level should be between FULL HOT and LOW HOT. If it is below LOW HOT, add an equivalent of DEXRON®-III or DEXRON®-IIE up to FULL HOT.

A/T fluid specification

: An equivalent of DEXRON®-III or DEXRON®-IIE

NOTE:

- **DO NOT RACE ENGINE while checking fluid level, even after the engine start.**
- **DO NOT OVERFILL. Overfilling can cause foaming and loss of fluid through breather. Then slippage and transmission failure can result.**
- **Bringing the level from LOW HOT to FULL HOT requires 0.35 liters (0.74/0.62 US/Imp. pt).**
- **If vehicle was driven under high load such as pulling a trailer, fluid level should be checked about half an hour after it is stopped.**

2. “FULL HOT” mark
3. “LOW HOT” mark
4. “FULL COLD” mark
5. “LOW COLD” mark

FLUID LEVEL AT ROOM TEMPERATURE

INSPECTION

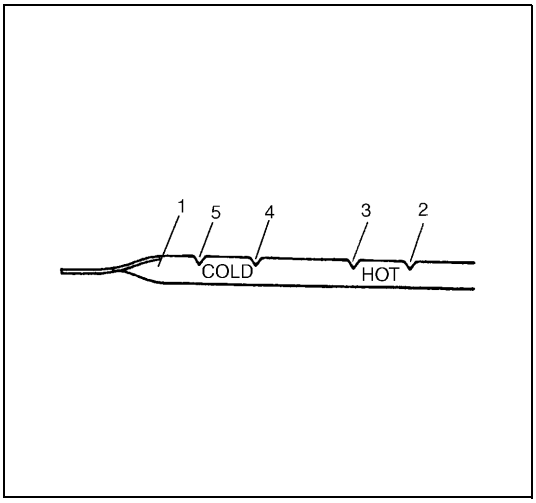

The fluid level check at room temperature performed after repair or fluid change before test driving is just preparation for level check of normal operation temperature. The checking procedure itself is the same as that described previously. If the fluid level is between FULL COLD and LOW COLD, proceed to test drive. And when the fluid temperature has reached the normal operating temperature, check fluid again and adjust it as necessary.

1. Dipstick
2. “FULL HOT” mark
3. “LOW HOT” mark
4. “FULL COLD” mark
5. “LOW COLD” mark

FLUID CHANGE

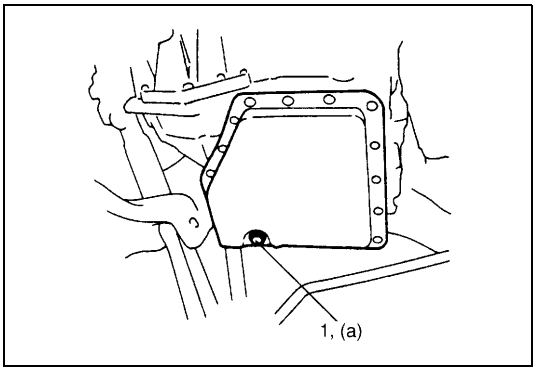

1) Lift up vehicle.
2) When engine has cooled down, remove drain plug (1) from oil pan and drain A/T fluid.
3) Install drain plug.

Tightening torque
A/T fluid drain plug (a) : 23 N·m (2.3 kg-m, 16.5 lb-ft)

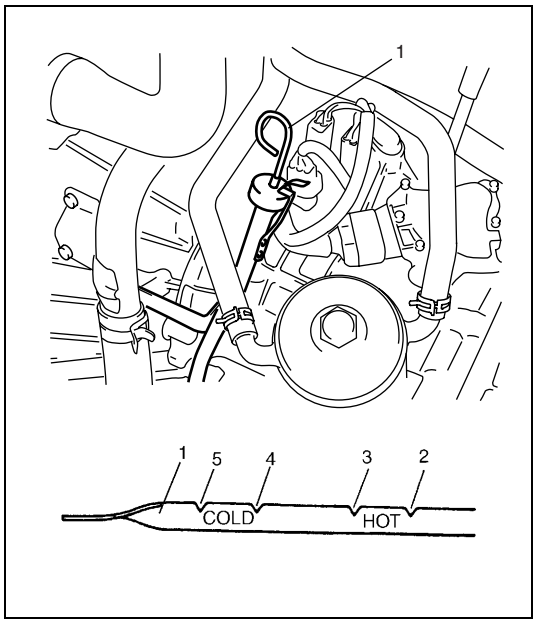

4) Lower vehicle and fill proper amount of an equivalent of DEXRON®-III or DEXRON®-IIE
5) Check fluid level according to procedure described under "FLUID LEVEL AT NORMAL OPERATING TEMPERATURE.

A/T fluid specification

: An equivalent of DEXRON®-III or DEXRON®-IIE

A/T fluid capacity
When draining from drain plug hole :
4.0 liters (8.45/7.04 US/Imp. pt.)
When overhauling :
5.1 liters (10.78/8.98 US/Imp. pt.)

1.	Dipstick
2.	"FULL HOT" mark
3.	"LOW HOT" mark
4.	"FULL COLD" mark
5.	"LOW COLD" mark

SELECTOR LEVER

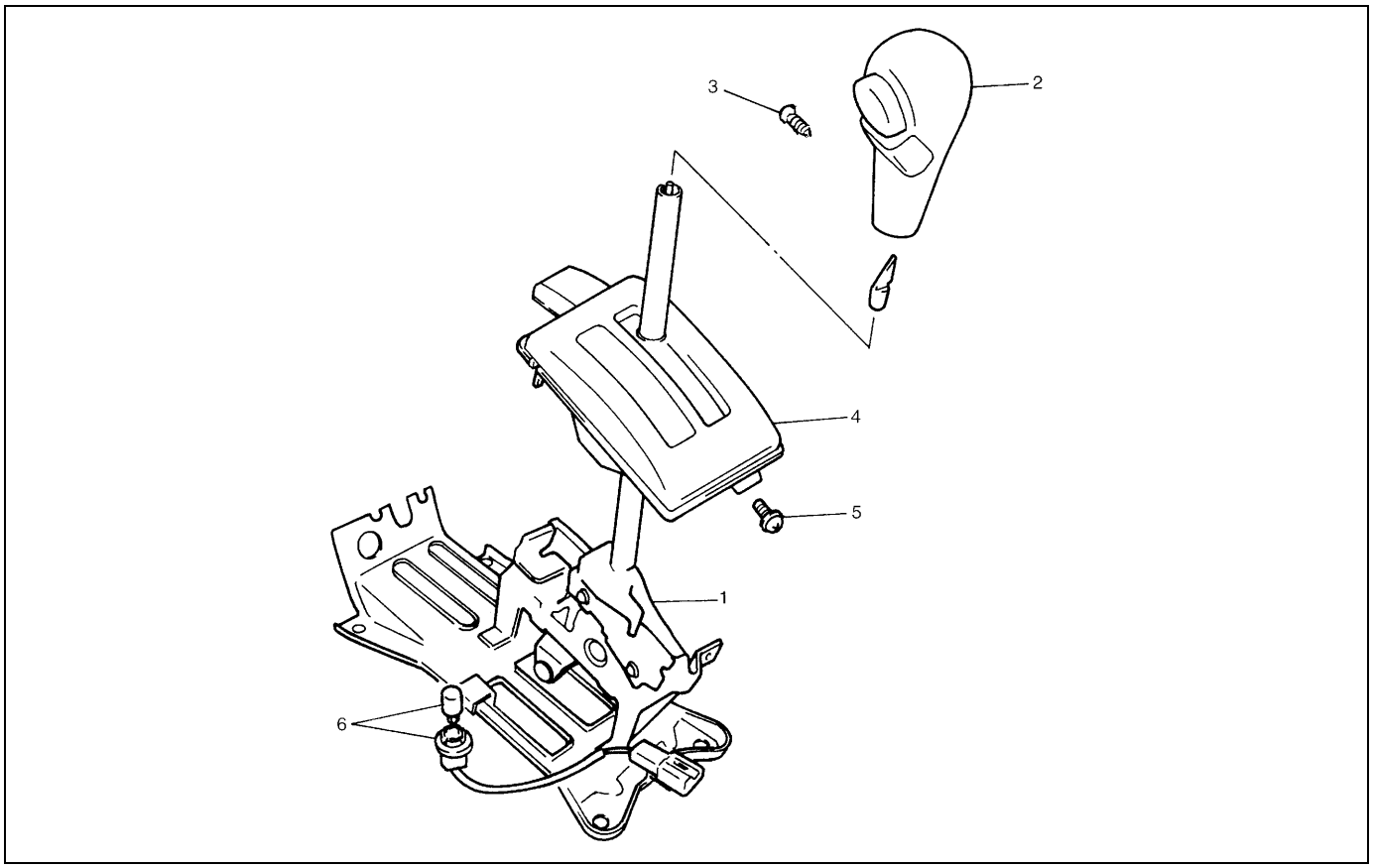

1. Selector lever assembly	4. Selector indicator assembly
2. Selector lever knob assembly	5. Screw
3. Screw	6. Illumination lamp assembly

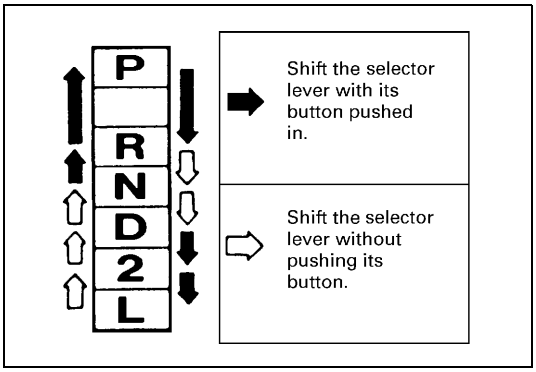

INSPECTION

Check selector lever for smooth and clear cut movement and position indicator for correct indication.
For operation of selector lever, refer to the figure.

TRANSMISSION RANGE SENSOR (SHIFT SWITCH)

REMOVAL

1) Block wheels and turn select lever to “N” range.
2) Disconnect transmission range sensor coupler and select cable.
3) Remove transmission range sensor from transmission case.

CAUTION:
Do not overhaul transmission range sensor.

INSPECTION

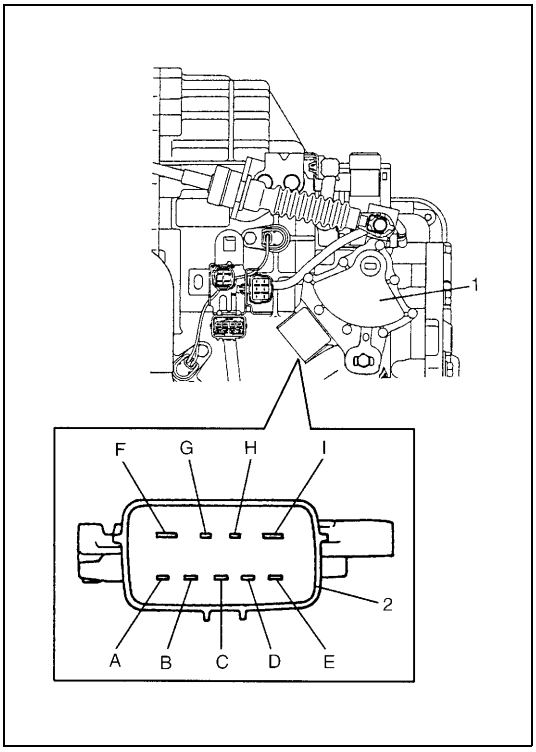

1) Disconnect transmission range sensor coupler (2).
2) Check that continuity exists at terminals shown below by moving selector lever.

Sensor Position \ Terminal	B	A	H	C	E	D	G	I	F
P	○						○	○	○
R		○					○		
N			○				○	○	○
D				○			○		
2					○		○		
L						○	○		

1. Transmission range sensor

INSTALLATION

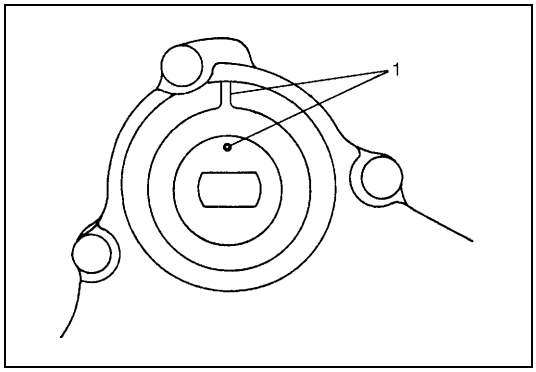

1) Using flat tip screwdriver, turn transmission range sensor to have the match marks (1) line up (transmission range sensor “N” range).

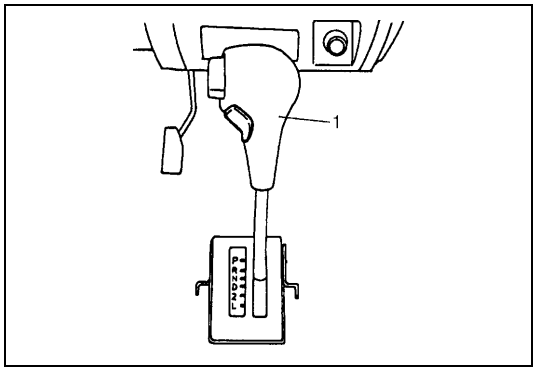

2) Turn selector lever (1) to “N” range (to have the automatic transmission to “N” range).

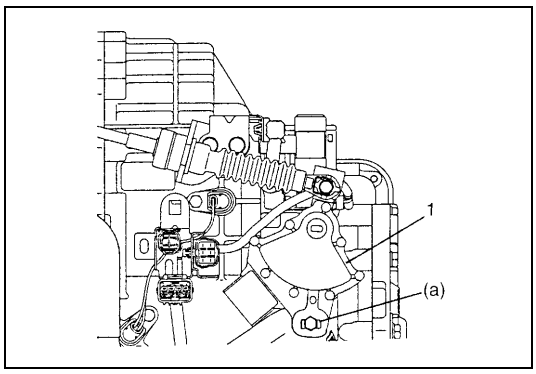

3) Install transmission range sensor (1) to transmission case.

Tightening torque
Transmission range sensor bolt
(a) : 18 N·m (1.8 kg-m, 13.0 lb-ft)

4) Move selector lever in cabin to each range and check the continuity of each terminal of transmission range sensor referring to “INSPECTION”.
5) Connect transmission range sensor coupler.
6) Check that the engine can only be started in “N” and “P” range, but can not in “D”, “2”, “L” or “R” range. Also, check that backup lamp come ON at “R” range.

SELECTOR CABLE

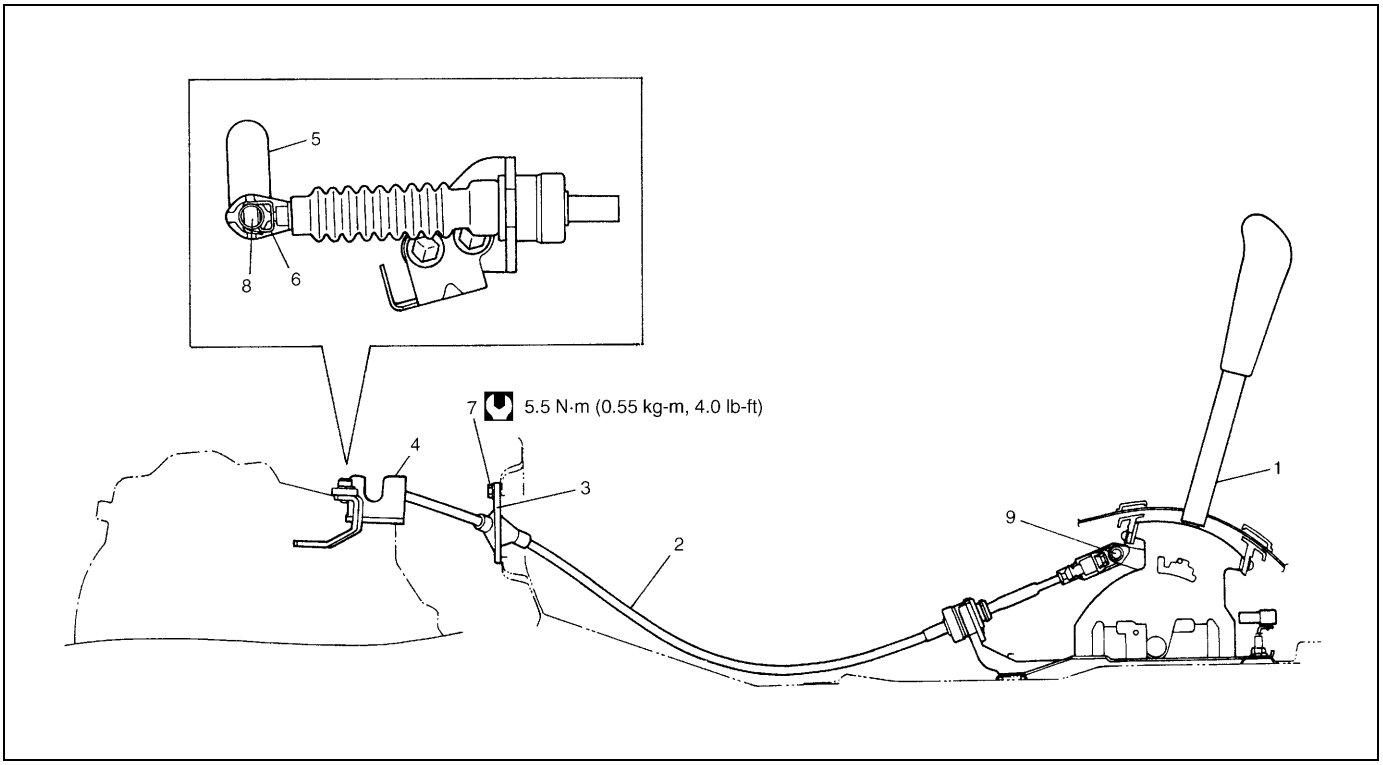

1. Selector lever assembly		6. Clip
2. Selector cable		7. Selector housing bolt
3. Selector housing	A	8. Shift control lever pin : Apply lithium grease 99000-25010 to all around pin (0.15 g)
4. Cable bracket	A	9. Selector lever pin : Apply lithium grease 99000-25010 to all around pin (0.15 g)
5. Shift control lever		Tightening torque

REMOVAL

1) Remove parking brake lever cover.
2) Remove console box.
3) Disconnect selector cable from selector lever and then detach from bracket.
4) Remove clip and disconnect selector cable from transmission.
5) Remove selector housing from dash panel.

INSTALLATION

Install selector cable by reversing removal procedure.
The important steps in installation are as follows.

- Apply grease to pin and cable joint.
- Tighten bolts and nut in upper figure to specified torque.
- Adjusting procedure is as follows.

ADJUSTMENT

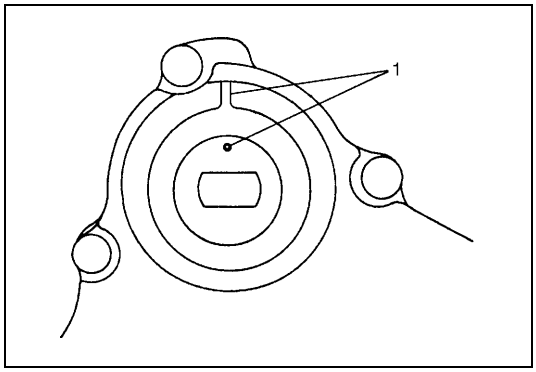

1) Turn transmission range sensor to have the match marks (1) line up (transmission range sensor “N” range).
2) Remove adjuster (cable end) from selector pin.

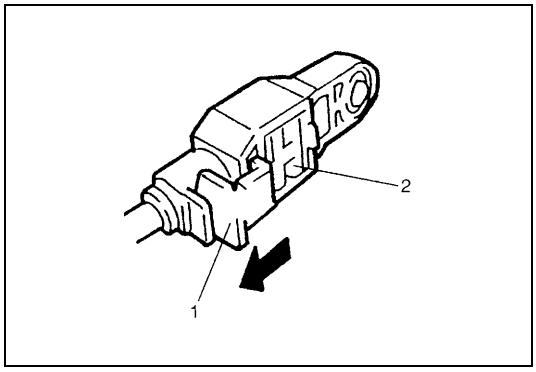

3) Release lock plate (1) which restrict moving of cable end holder (2).

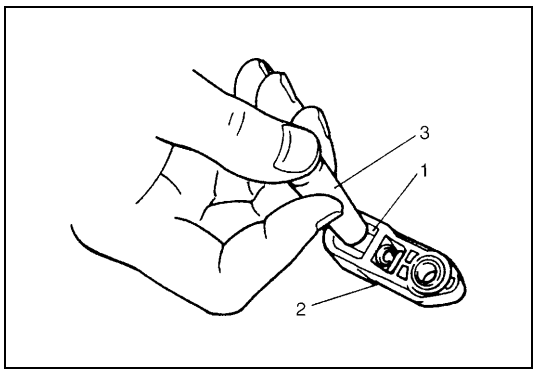

4) Push cable end holder (1) out from eye-end (2) using an appropriate tool (3) to disengage cable.

5) Shift selector lever to “N” position.
6) Apply grease to selector pin and install adjuster (cable end) to it.

Grease : 99000-25010

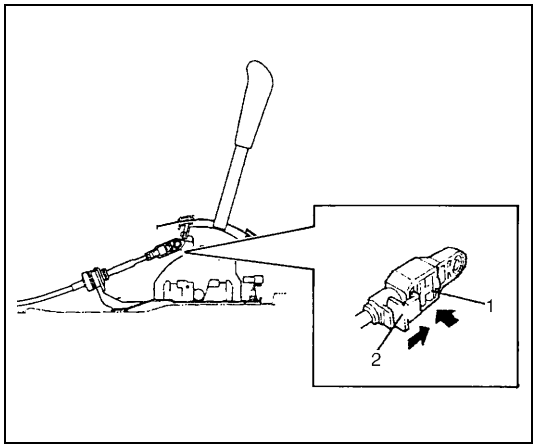

7) With both selector lever and transmission range sensor kept each “N” position, drive cable end holder (1) in until it locks cable.
8) Slide lock plate (2) to secure cable end holder in position.
9) After selector rod was installed, check for the following.
   - Push vehicle with selector lever shifted to “P” range. Vehicle should not move.
   - Vehicle can not be driven in “N” range.
   - Vehicle can be driven in “D”, “2” and “L” ranges.
   - Vehicle can be backed in “R” range.

OUTPUT SHAFT SPEED SENSOR (A/T VSS)

INSPECTION

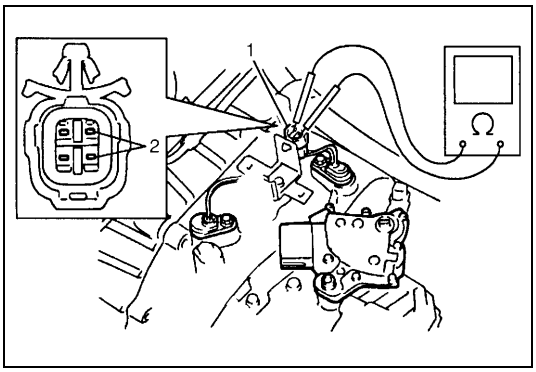

1) Disconnect negative cable at battery.
2) Disconnect output shaft speed sensor – input shaft speed sensor coupler (1).
3) Check resistance between output shaft speed sensor terminals (2).

Output shaft speed sensor resistance
Standard : 160 – 200 Ω at 20°C (68°F)

REMOVAL

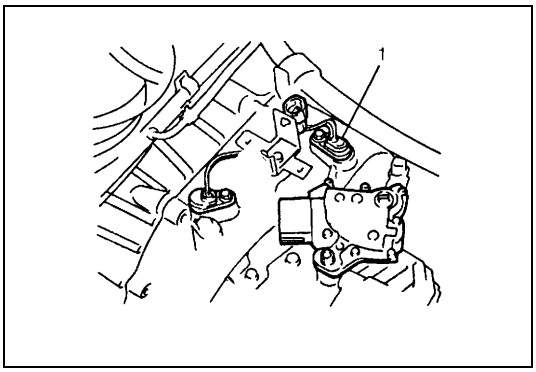

1) Disconnect negative cable at battery.
2) Disconnect output shaft speed sensor – input shaft speed sensor coupler.
3) Remove output shaft speed sensor (1) by removing its bolt.

INSTALLATION

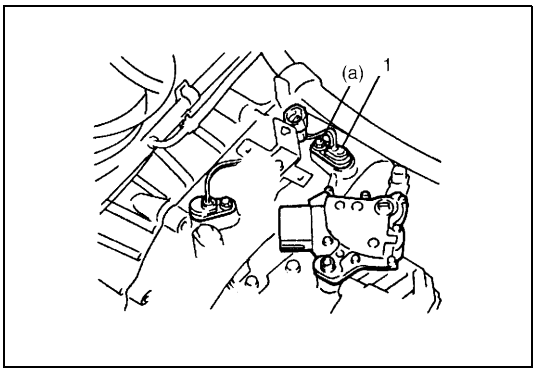

1) Apply A/T fluid to output shaft speed sensor o-ring.
2) Install output shaft speed sensor (1) to A/T case and tighten bolt to specified torque.

Tightening torque
Output shaft speed sensor bolt
(a) : 8 N·m (0.8 kg-m, 6.0 lb-ft)

3) Connect output shaft speed sensor – input shaft speed sensor coupler.
4) Connect negative cable to battery.

INPUT SHAFT SPEED SENSOR

INSPECTION

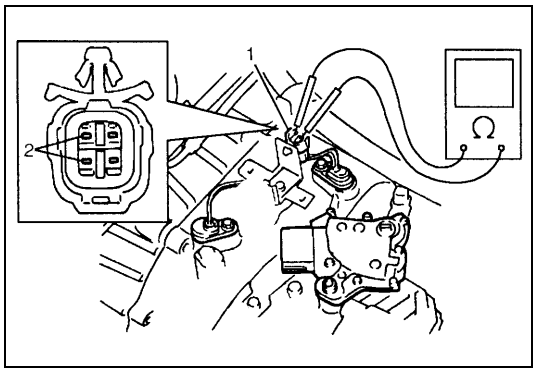

1) Disconnect negative cable at battery.
2) Disconnect output shaft speed sensor – input shaft speed sensor coupler (1).
3) Check resistance between input shaft speed sensor terminals (2).

Input shaft speed sensor resistance
Standard : 160 – 200 Ω at 20°C (68°F)

REMOVAL

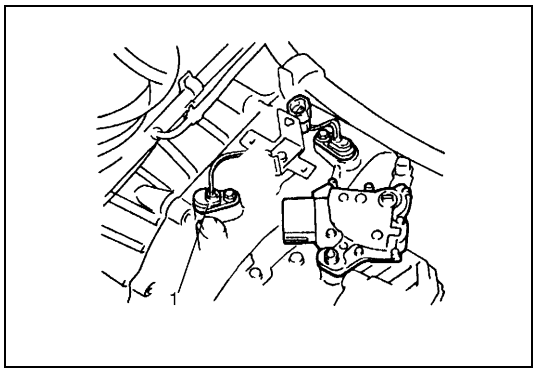

1) Disconnect negative cable at battery.
2) Disconnect output shaft speed sensor – input shaft speed sensor coupler.
3) Remove input shaft speed sensor (1) by removing its bolt.

INSTALLATION

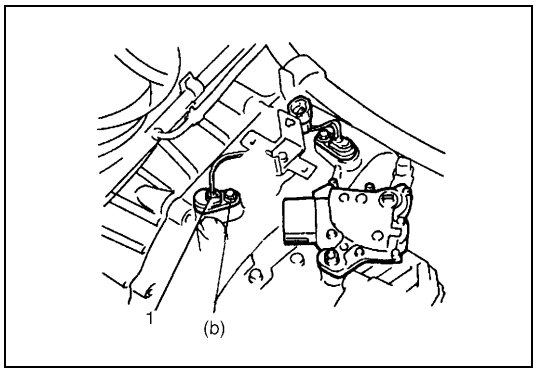

1) Apply A/T fluid to input shaft speed sensor O-ring.
2) Install input shaft speed sensor (1) to A/T case and tighten bolt to specified torque.

Tightening torque
Input shaft speed sensor bolt
(b) : 8 N·m (0.8 kg-m, 6.0 lb-ft)

3) Connect output shaft speed sensor – input shaft speed sensor coupler.
4) Connect negative cable to battery.

VEHICLE SPEED SENSOR (VSS)

Refer to Section 6E for removal, installation and inspection.

THROTTLE POSITION SENSOR

INSPECTION

Check throttle position sensor referring to Section 6E.

ENGINE COOLANT TEMP. (ECT) SENSOR

INSPECTION

Check engine coolant temp. sensor referring to Section 6E.

DROPPING RESISTOR

REMOVAL/INSTALLATION

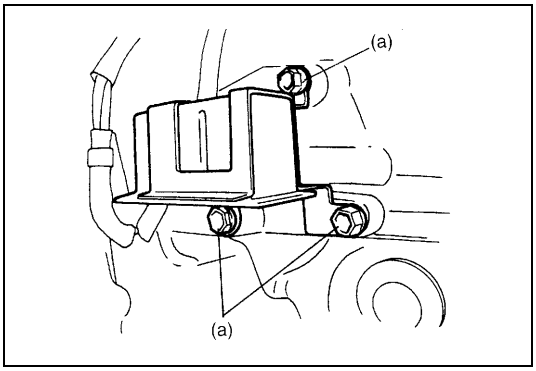

Refer to the figure for removal/installation.

Tightening torque
Dropping resistor bolts
(a) : 20 N·m (2.0 kg-m, 14.5 lb-ft)

INSPECTION

Measure resistance between each resistor terminals.

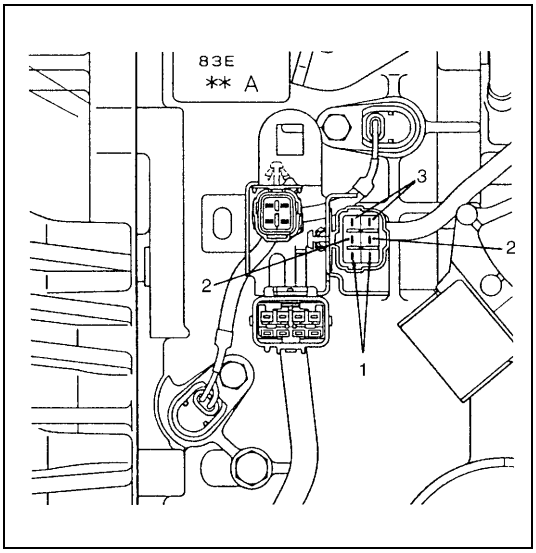

Dropping resistor resistance

CIRCUIT	RESISTANCE
Shift solenoid -C (No.3)	6.5 – 8.5 Ω
Shift solenoid -D (No.4)	6.5 – 8.5 Ω
Shift solenoid -E (No.5)	6.5 – 8.5 Ω

1. Resistor terminal for shift solenoid -C Circuit
2. Resistor terminal for shift solenoid -D Circuit
3. Resistor terminal for shift solenoid -E Circuit

O/D OFF SWITCH

INSPECTION

1) Remove console box.

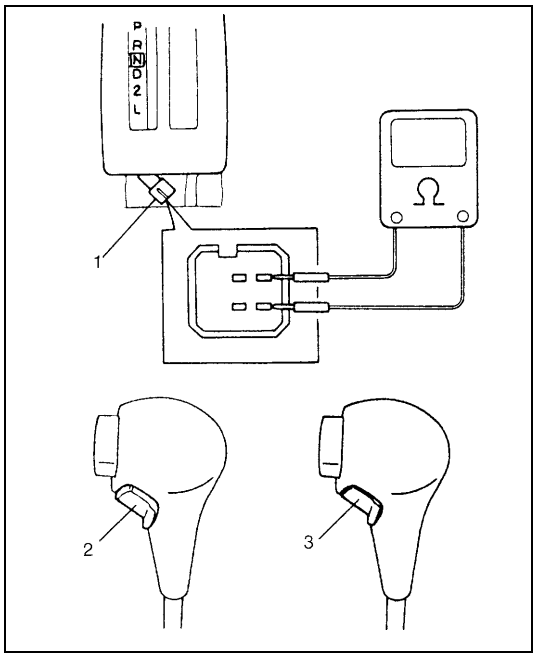

2) Disconnect O/D off switch coupler (1).
3) Check continuity between O/D off switch terminals.

O/D OFF switch specification

O/D off switch	ON	OFF
Continuity	Continuity	No continuity

2. O/D off switch ON
3. O/D off switch OFF

SHIFT SOLENOID VALVES AND TRANSMISSION TEMPERATURE SENSOR

REMOVAL

1) Disconnect negative cable at battery.
2) Drain A/T fluid.

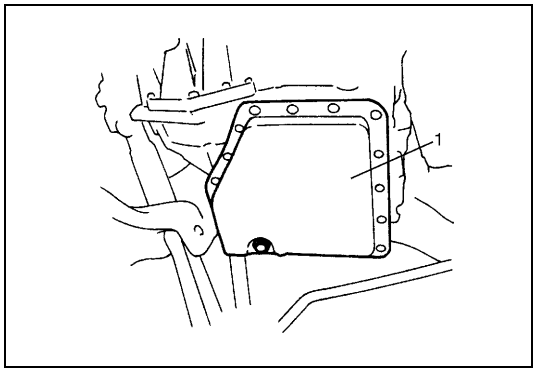

3) Remove A/T oil pan (1).

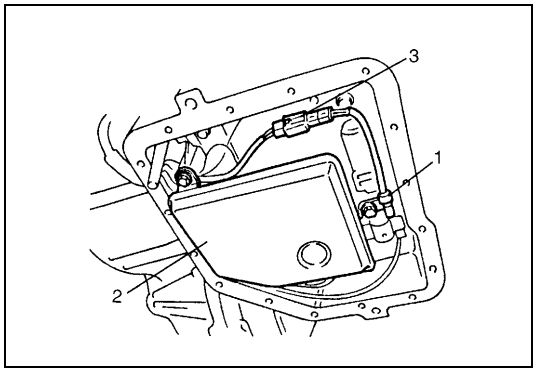

4) Disconnect transmission temp. sensor coupler (3).
5) Remove A/T oil strainer (2) and transmission temp. sensor (1).

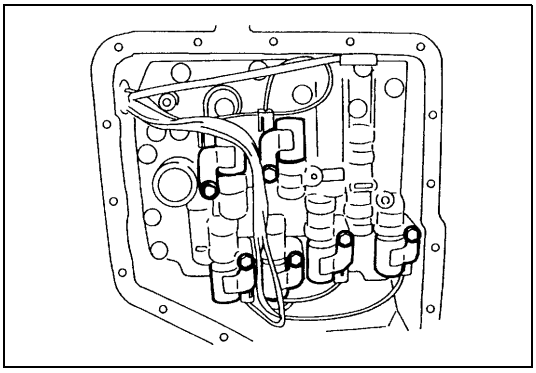

6) Disconnect shift solenoid couplers.
7) Remove shift solenoid valves.

SHIFT SOLENOID VALVES

INSPECTION

Resistance Check

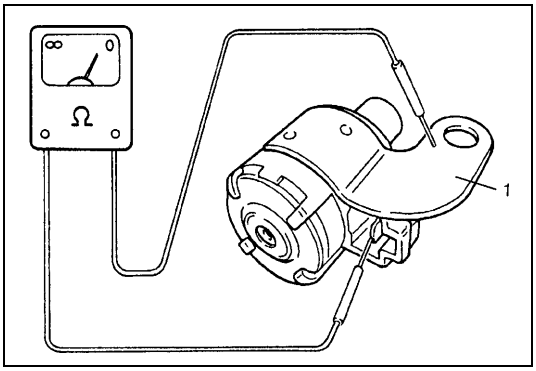

- Shift solenoid A (No.1), B (No.2) and lock-up solenoid
  Resistance between terminal and solenoid body
  Standard : 10.5 – 15.5 Ω

- Shift solenoid C (No.3), D (No.4) or E (No.5)

  Resistance between terminal and solenoid body
  Standard : 2.5 – 3.5 Ω

1. Solenoid valve

Operation check

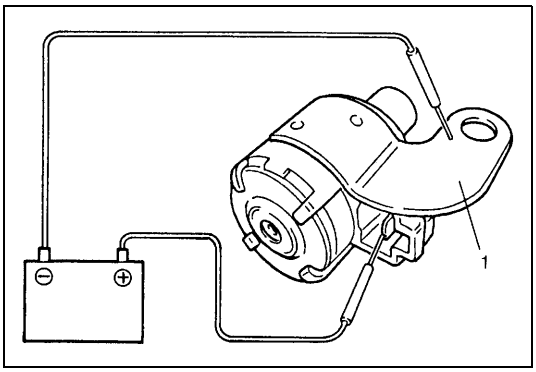

When solenoids is connected to the battery as shown in figure, check that the solenoid actuates with a click sound.

1. Solenoid valve

TRANSMISSION TEMPERATURE SENSOR

INSPECTION

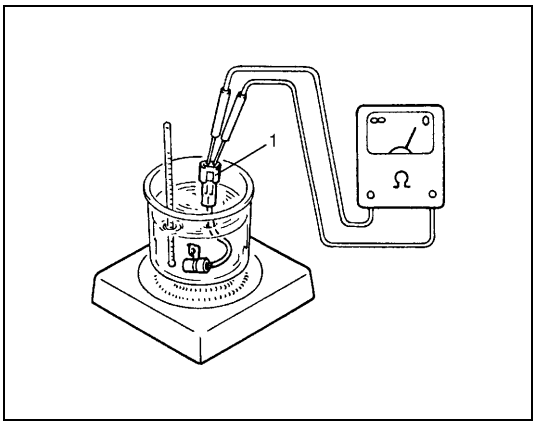

Warm up transmission temp. sensor. Thus make sure its resistance decrease with the increase of temperature.

Transmission temperature sensor resistance

Temperature	Resistance
20°C (68°F)	2.5 kΩ
40°C (104°F)	1.2 kΩ
60°C (140°F)	0.6 kΩ

1. Transmission temperature sensor coupler

INSTALLATION

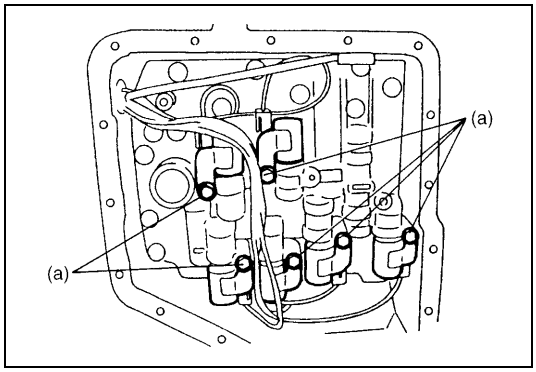

1) Install shift solenoid valves.

Tightening torque
Solenoid valve bolts (a) : 8 N·m (0.8 kg-m, 6.0 lb-ft)

2) Connect shift solenoid couplers.

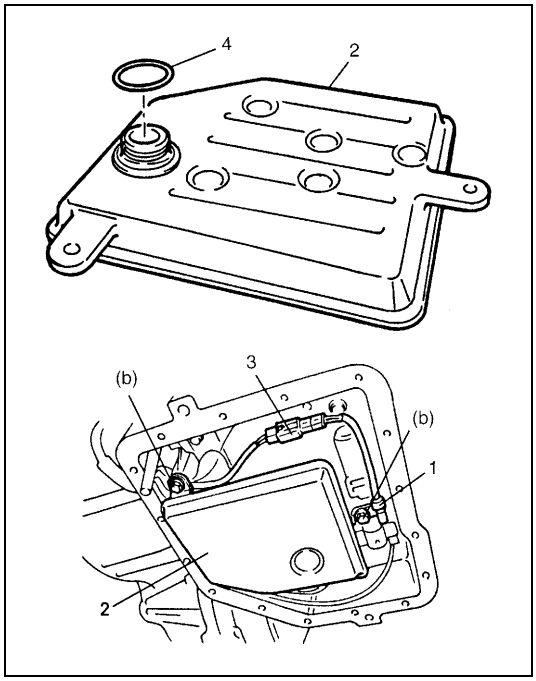

3) Install oil strainer (2) and transmission temperature sensor (1).

Tightening torque
Transmission temperature sensor bolt
(b) : 10 N·m (1.0 kg-m, 7.5 lb-ft)

NOTE:
Do not forget to install O-ring (4) to oil strainer first.

4) Connect transmission temperature sensor coupler (3).

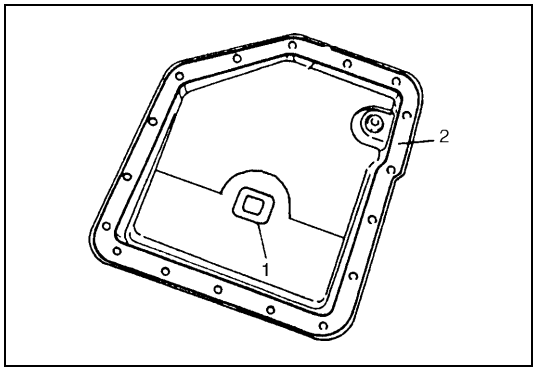

5) Clean mating surface of A/T oil pan (1) and A/T case.
6) Install new gasket (2) to A/T oil pan.

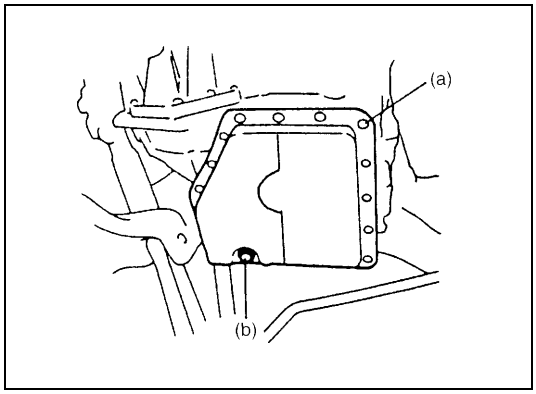

7) Install A/T oil pan.

Tightening torque
A/T oil pan bolts (a) : 7.5 N·m (0.75 kg-m, 5.5 lb-ft)

8) Install A/T fluid drain bolt.

Tightening torque
A/T fluid drain bolt (b) : 23 N·m (2.3 kg-m, 16.5 lb-ft)

9) Refill A/T fluid referring to “FLUID CHANGE” in this section.
10) Verify that there is no A/T fluid leakage.

DIFFERENTIAL SIDE OIL SEAL

REPLACEMENT

1) Lift up vehicle and drain transmission oil.
2) Remove drive shaft joints from differential gear of transmission.
   Refer to Section 4 for procedure to disconnect drive shaft joints.
   For differential side oil seal removal, it is not necessary to remove drive shafts from steering knuckle.
   For 4WD vehicle, remove transfer referring to Section 7D.

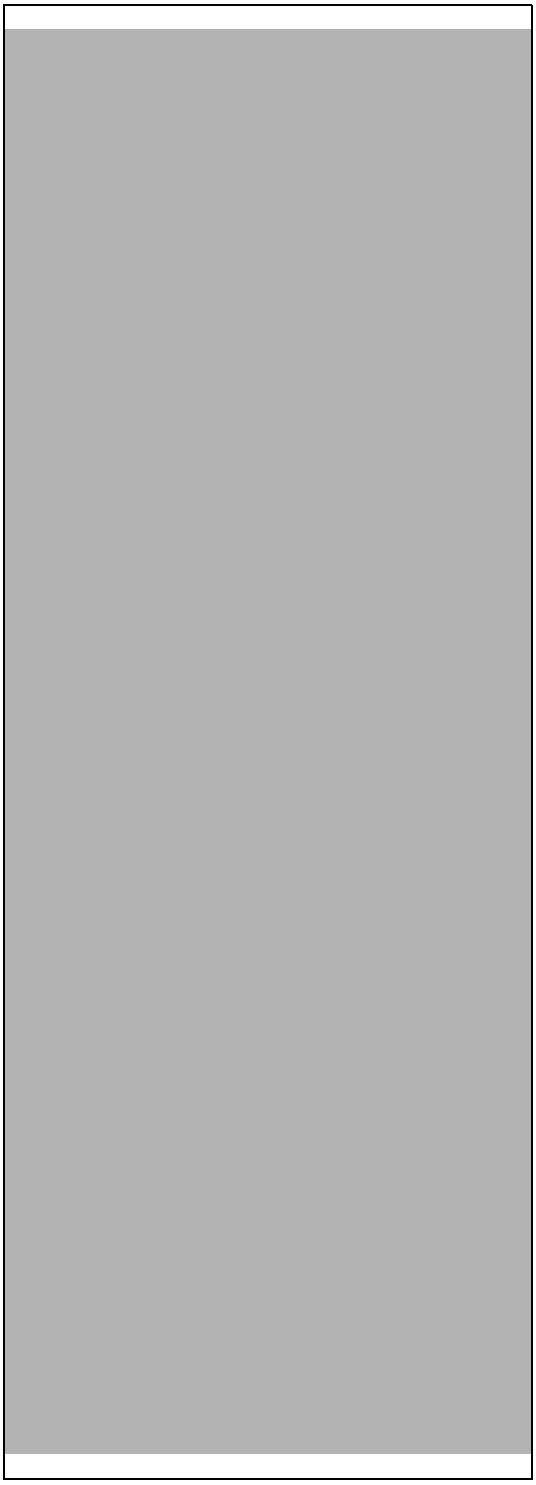

3) Remove differential side oil seal (1) by using flat end rod or like.
4) Install new differential side oil seal by using special tool.

NOTE:

For oil seal installation, press-fit oil seal so that transmission case end face is flush with oil seal end face.

Special tool
(A) : 09940-53111
(B) : 09913-75510

5) Install drive shaft referring to Section 4.
6) Refill A/T fluid referring to “FLUID CHANGE” in this section.

2.	Steering gear box
3.	A/T oil pan
4.	Torque converter housing
5.	Transmission case

TRANSMISSION CONTROL MODULE (TCM)

CAUTION:

TCM and ECM consist of highly precise parts, so when handling it (or them), be careful not to expose to excessive shock.

NOTE:

When replacing TCM with used one, all learned contents which are stored in TCM memory should be erased referring to "LEARNING CONTROL INITIALIZATION" in this section.

REMOVAL

1) Disconnect negative cable at battery.
2) If the vehicle is equipped with air bag system, disable air bag system. Refer to "DISABLING AIR BAG SYSTEM" in Section 10B.

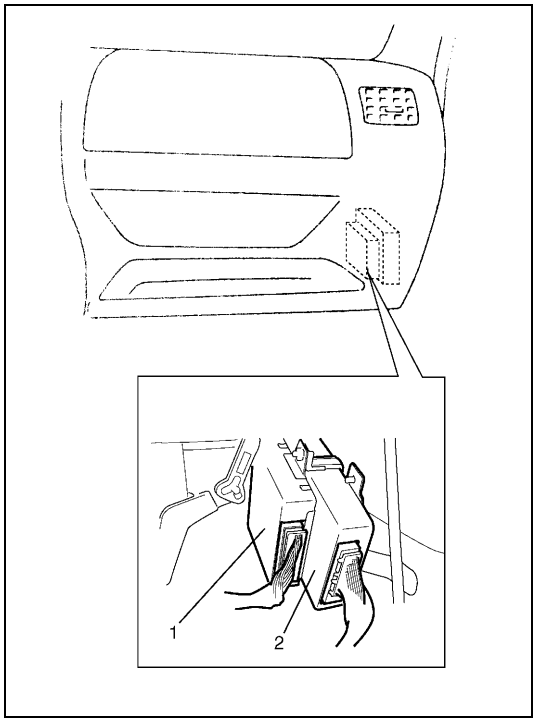

3) Disconnect couplers from TCM (1) and ECM (2).
4) Loosen bolt and nuts and remove TCM (1) together with ECM (2) from vehicle.

INSTALLATION

Reverse removal procedure noting the following.

- Connect ECM and TCM couplers securely.
- If the vehicle is equipped with air bag system, be sure to enable air bag system after TCM and ECM are back in place. Refer to "ENABLING AIR BAG SYSTEM" in Section 10B.

LEARNING CONTROL INITIALIZATION

When one or more operations such as shown below are performed, all learned contents which are stored in TCM memory should be erased after the operations.

- Replacing transmission with new or used one.
- Repairing transmission partially by replacing any brake component parts with new and/or used brake disc(s), plate(s) and/or flange.
- Repairing transmission partially by replacing any clutch component parts with new and/or used clutch disc(s), plate(s) and/or flange.
- Replacing TCM with used one.

1) Turn ignition switch ON, leaving engine OFF.
2) Using service wire, connect diagnosis switch terminal (2) with ground terminal (3) of monitor connector No.2 (1).
3) Shift selector lever from "D" range to "2" range 3 times repeatedly within 10 seconds with diagnosis switch terminal (2) kept on connecting with ground.
4) Check DTC referring to "DTC CHECK" in this section and confirm that only DTC No.12 is displayed.
   If not, repeat Step 1) to Step 3) and check again.

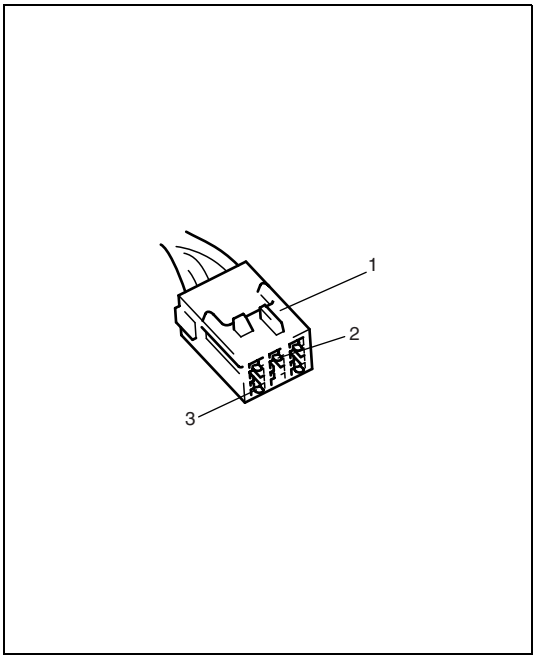

NOTE:

- **"O/D OFF" lamp lights during initializing.**
- **Diagnostic trouble code(s) (DTC(s)) also are erased by performing this initializing procedure.**
- **After initializing is achieved, DTC No.12 is stored in TCM. If initializing is failed, DTC No.52 is stored in TCM.**

BRAKE INTERLOCK SYSTEM (IF EQUIPPED)

SHIFT LOCK SOLENOID CONTROL

This system consists of shift lock solenoid control system and interlock cable control system.

The shift lock solenoid control system is so designed that the selector lever can not be shifted from "P" range position unless ignition switch is turned ON and the brake pedal is depressed.

And interlock cable control system is so designed that select lever cannot be shifted from "P" range position unless ignition switch is turned to "ACC" or "ON" position. Also, ignition key cannot be pulled out of key slot unless selector lever is in "P" range.

SHIFT LOCK SOLENOID MANUAL RLEASE

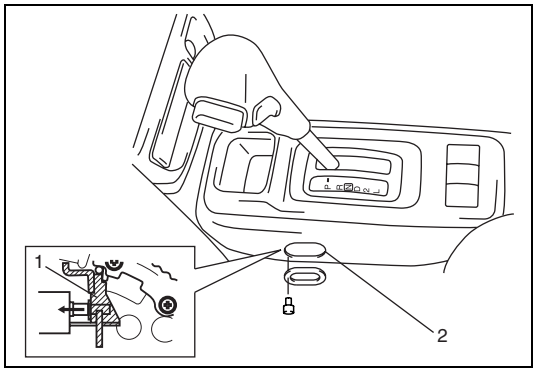

Without using brake pedal, shift lock can be moved by pushing shift lock solenoid cam (1) with screw driver or like through hole (2). (To shift selector lever from “P” range to any other position, turn ignition switch to “ACC” or “ON” position.)

INSPECTION

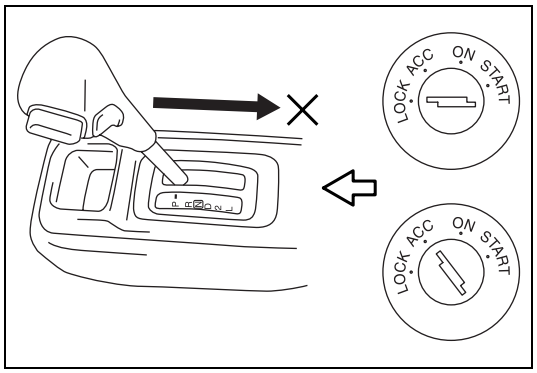

1) Check to make sure that selector lever cannot be moved to any other range from “P” range position when ignition switch key is at “ACC” position, at “LOCK” position (or it is removed from keyhole of ignition switch) or brake pedal is not depressed.

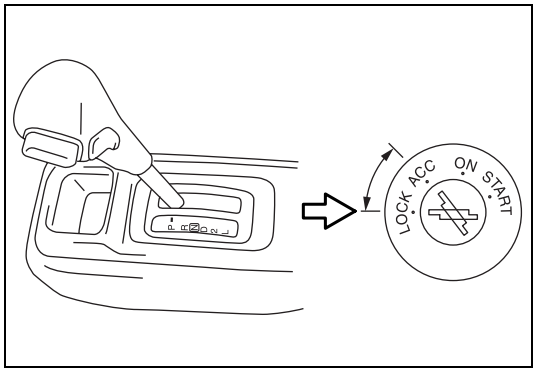

2) Shift selector lever to “P” range position, release knob button and check for the following.
- Ignition key can be turned between “LOCK” and “ACC” positions back and forth and also it can be removed from ignition switch.

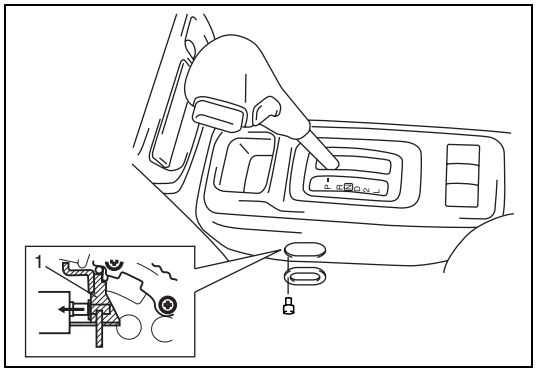

- With shift lock solenoid cam (1) moved in arrow direction and ignition key turned to “ACC” position, selector lever can be shifted from “P” range position to any other range.
- With shift lock solenoid cam moved in arrow direction and ignition key turned to “LOCK” position, selector lever can not be shifted from “P” range position to any other range.

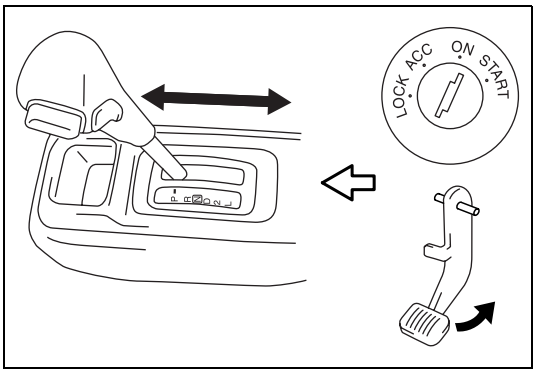

- When ignition switch is turned “ON” and brake pedal is depressed, selector lever can be shifted from “P” range position to any other range.

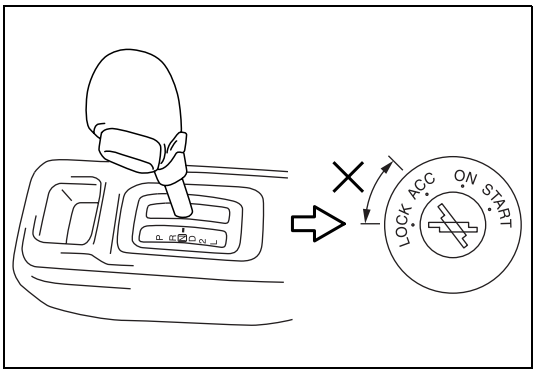

3) With ignition lever shifted to any position other than “P” range, check that ignition key cannot be turned “LOCK” position and it cannot be removed from ignition switch unless it is at “LOCK” position.

KEY INTERLOCK CABLE (IF EQUIPPED)

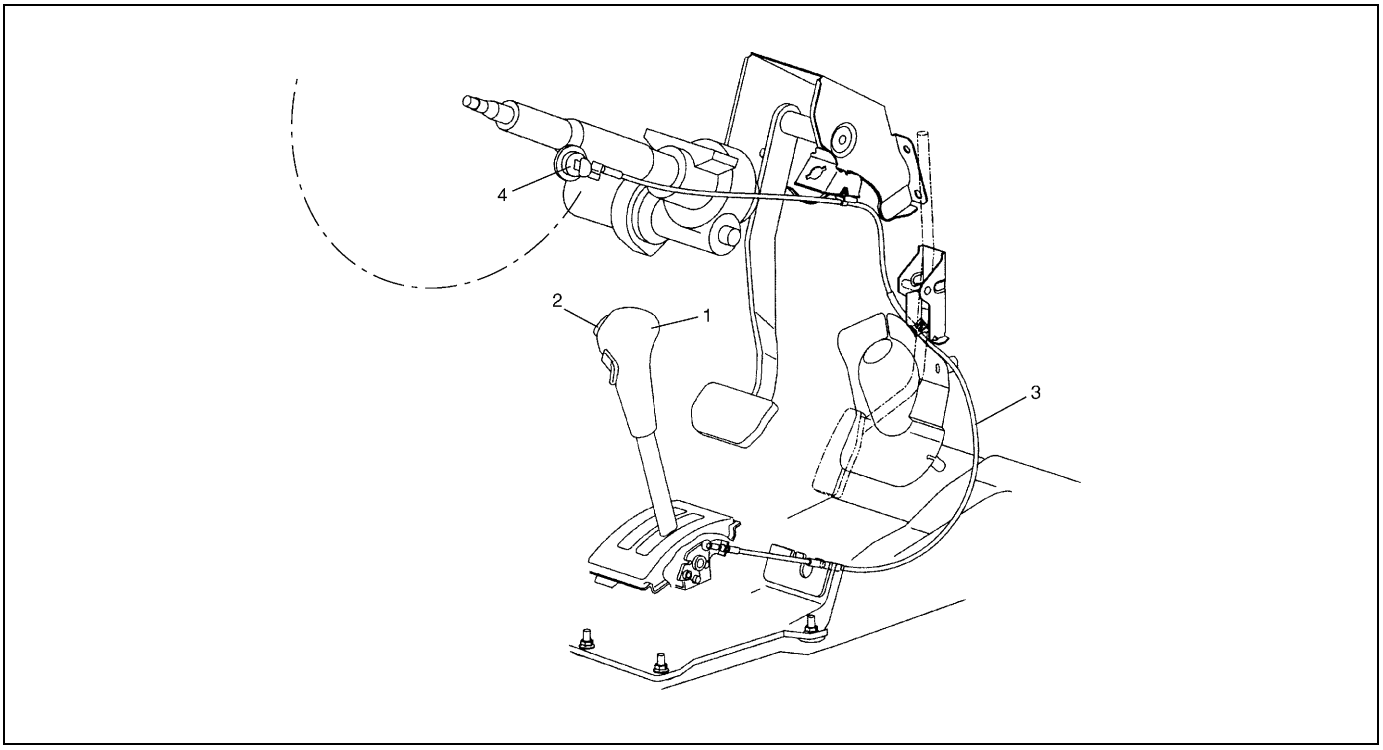

1. selector lever	3. key inter lock cable
2. knob button	4. key cylinder

NOTE:

Don’t bend interlock cable excessively when removing and installing it, or system will not operate correctly.

REMOVAL

1) Disconnect negative cable at battery and disable air bag system, referring to “DISABLING AIR BAG SYSTEMS” in Section 10B (if equipped).
2) Remove steering column hole cover and steering column cover.
3) Remove steering column mounting bolts and nuts.

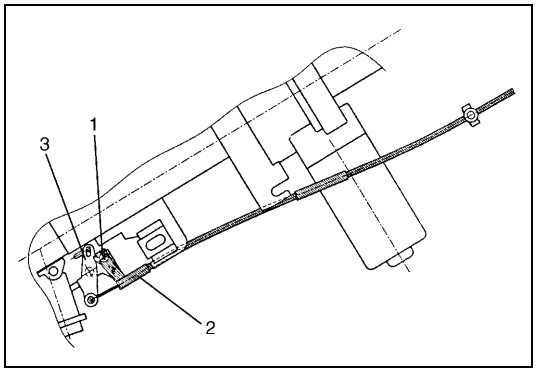

4) Remove interlock cable screw (1) located at ignition switch and disconnect interlock cable (2) from key cylinder arm (3) with ignition switch turned to “ACC” position.

5) Remove center console.

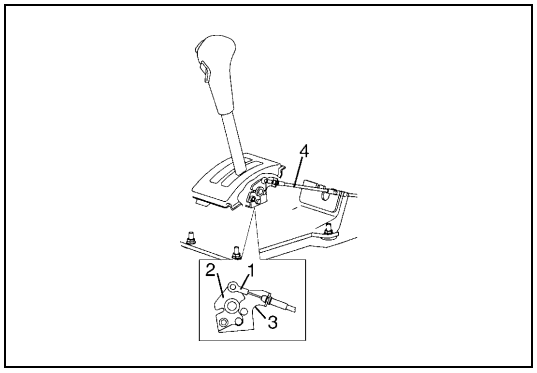

6) Remove cable end (1) from key interlock cam (2) and its bracket (3).
7) Remove interlock cable (4).

INSTALLATION

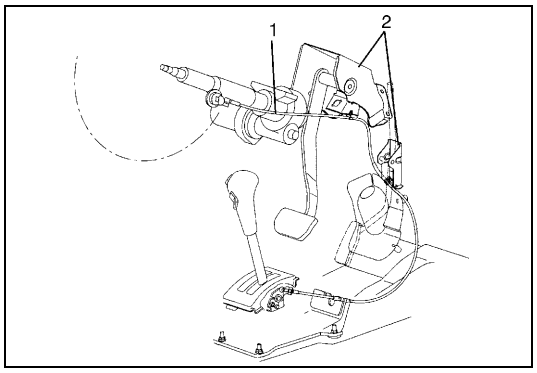

1) Install interlock cable (1) to pedal brackets (2) by clamp as shown in figure.

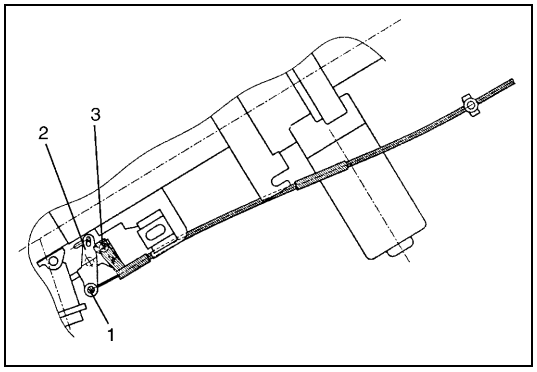

2) With ignition key at “ACC” position, connect cable end (1) to key cylinder arm (2) and tighten cable screw (3) securely.

3) If selector lever is in “P” range, shift selector lever to other than “P” range with releasing shift lock referring to “SHIFT LOCK SOLENOID MANUAL RELEASE” in this section.

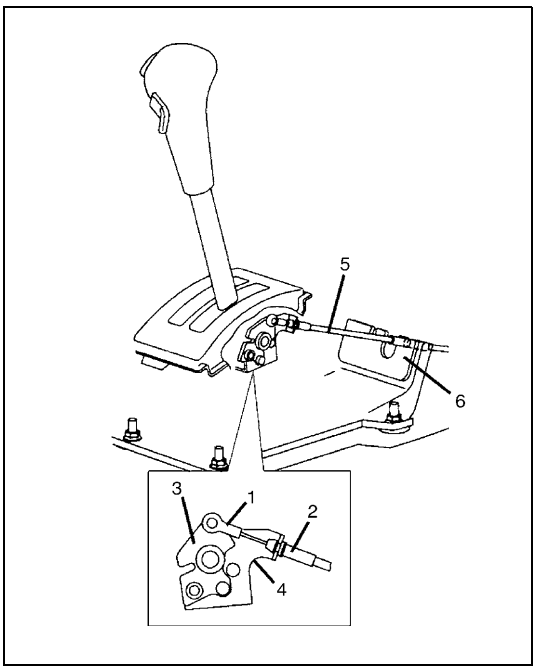

4) Install cable end (1) and cable casing cap (2) to key interlock cam (3) and its bracket (4), then install cable (5) to selector pad (6).

5) With selector lever set at “P” position, turn ignition key to “ACC” position and then check for following conditions.
   - With knob button released, ignition key can be turned from “ACC” position to “LOCK” position.
   - With knob button pressed, ignition key cannot be turned from “ACC” position to “LOCK” position.
6) Install steering column referring to Section 3C.
7) Install steering column hole cover.
8) Install center console.
9) Connect negative cable at battery and enable air bag system, referring to “ENABLING AIR BAG SYSTEM” in Section 10B (if equipped).

TRANSMISSION UNIT REPAIR OVERHAUL

NOTE:

When transmission is replaced, or when clutch or brake disc, plate and/or flange is changed to new and/or used one, all learned contents which are stored in TCM memory should be erased referring to "LEARNING CONTROL INITIALIZATION" in this section.

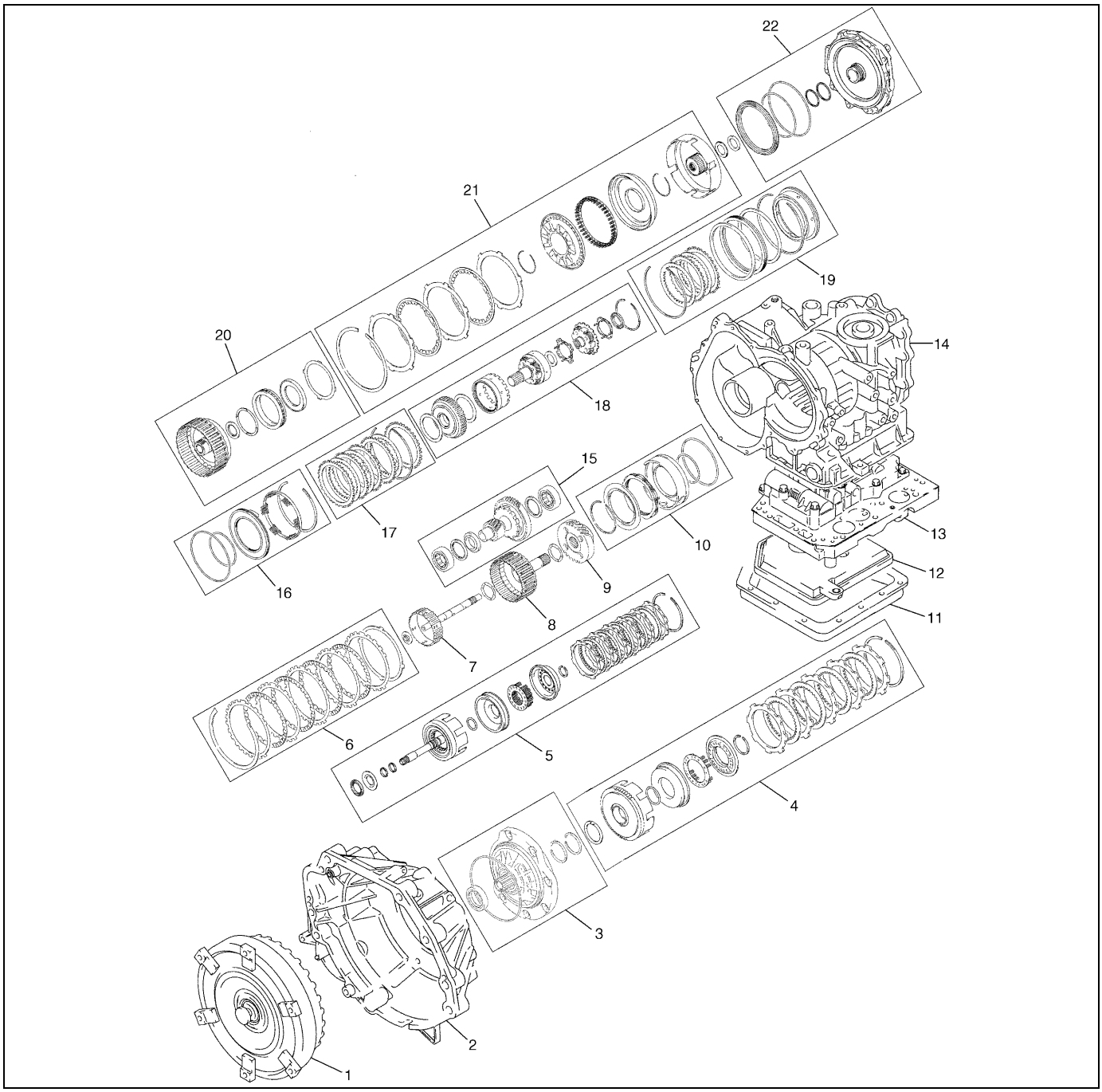

1. Torque converter	9. Counter drive gear	17. 1st & 2nd brake (B1) assembly
2. Torque converter housing	10. Reverse brake (B2) piston assembly	18. Planetary gear assembly
3. Oil pump assembly	11. A/T oil pan	19. O/D brake (B0) assembly
4. Front clutch (C2) assembly	12. Oil strainer	20. Planetary sun gear No.1 assembly
5. Rear Clutch (C1) assembly	13. Valve body assembly	21. Direct clutch (C0) assembly
6. Reverse brake (B2) assembly	14. Transmission case	22. O/D brake (B0) piston and rear cover assembly
7. Intermediate shaft	15. Counter driven gear assembly	
8. Follow shaft	16. 1st & 2nd brake (B1) piston assembly	

DISMOUNTING

1) Take down transmission with engine. For its procedure, refer to Section 6A1.
2) For 4WD vehicle, remove transfer referring to Section 7D
   For 2WD vehicle, remove engine rear mounting No.1 bracket and engine rear mounting No.2 bracket with stiffener.

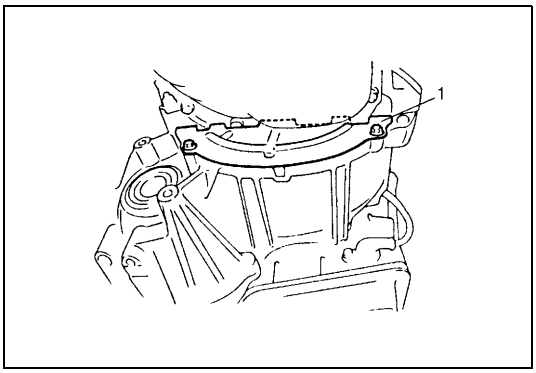

3) Remove torque converter housing lower plate (1).

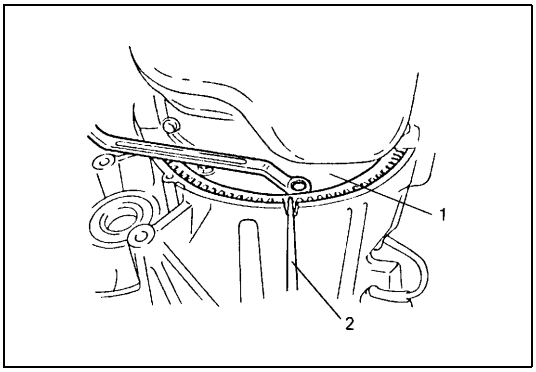

4) Remove drive plate bolts.
   To lock drive plate (1), engage a flat head rod or the like (2) with drive plate gear.

5) Remove starting motor.

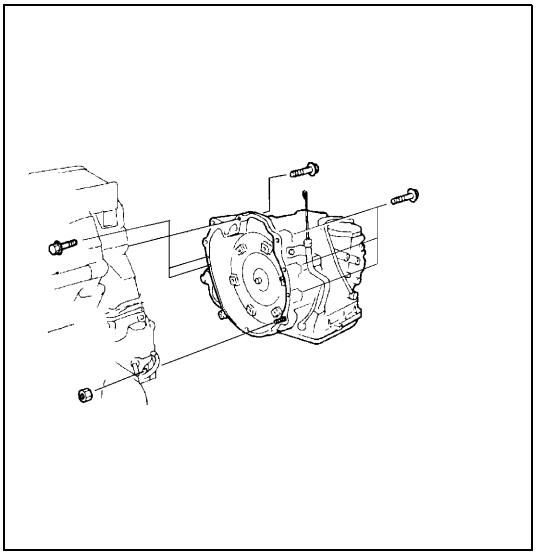

6) Remove bolts and nut fastening engine and transmission, then detach transmission from engine.

NOTE:

When detaching transmission from engine, move it in parallel with crankshaft and use care so as not to apply excessive force to drive plate and torque converter.

WARNING:

Be sure to keep transmission with torque converter horizontal or facing up throughout the work. Should it be tilted with torque converter down, converter may fall off and cause personal injury.

REMOUNTING

1) Make sure that torque converter is installed correctly to transmission.
   Refer to “UNIT ASSEMBLY” in this section.

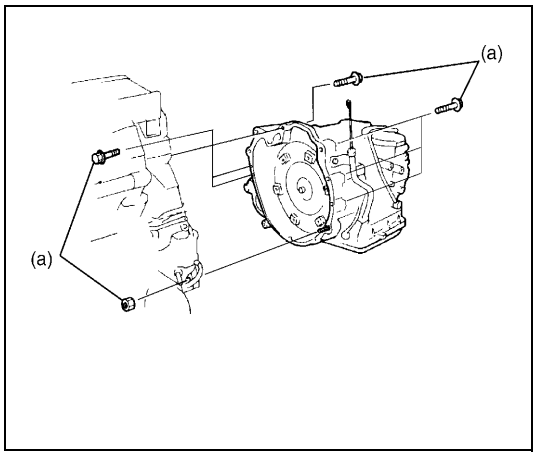

2) Attach transmission to engine.

Tightening torque
Transmission to engine bolts and nut
(a) : 85 N·m (8.5 kg-m, 61.5 lb-ft)

WARNING:
Be sure to keep transmission with torque converter horizontal or facing up throughout the work. Should it be tilted with torque converter down, converter may fall off and cause personal injury.

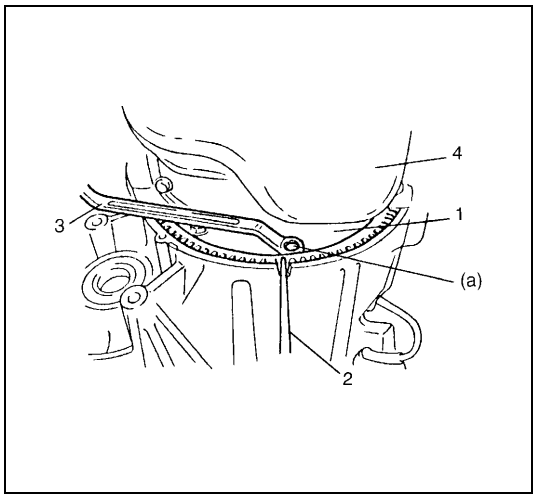

3) Tighten drive plate-torque converter bolts.
   Align drive plate bolt hole and torque converter through starter motor mounting opening then tighten bolts through torque converter housing lower plate opening.
   Lock drive plate (1) by engaging a flat head rod or the like (2) with drive plate gear.

Tightening torque
Drive plate to torque converter bolts
(a) : 20 N·m (2.0 kg-m, 14.5 lb-ft)

3.	Wrench
4.	Engine oil pan

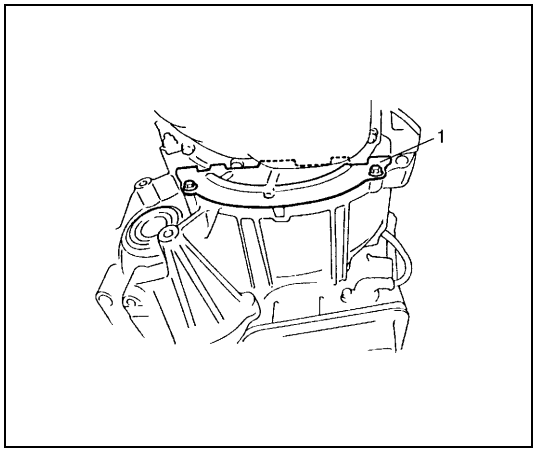

4) Install torque converter housing lower plate (1).
5) Install starter motor.

Tightening Torque
Starter motor bolts : 23 N·m (2.3 kg-m, 16.5 lb-ft)

6) For 4WD vehicle, install transfer referring to Section 7D.
   For 2WD vehicle, install engine rear mounting brackets and stiffener.
7) Remount engine with transmission assembly to vehicle. Refer to Section 6A1 for its procedure.

UNIT DISASSEMBLY

CAUTION:
- **Thoroughly clean transmission exterior before overhauling it.**
- **Keep working table, tools and hands clean while overhauling.**
- **Use special care to handle aluminum parts so as not to damage them.**
- **Do not expose removed parts to dust. Keep them always clean.**

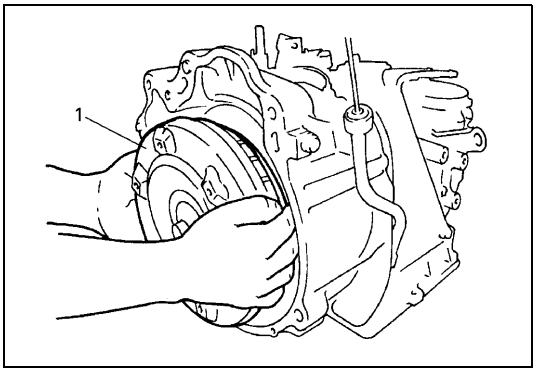

1) Remove torque converter (1).

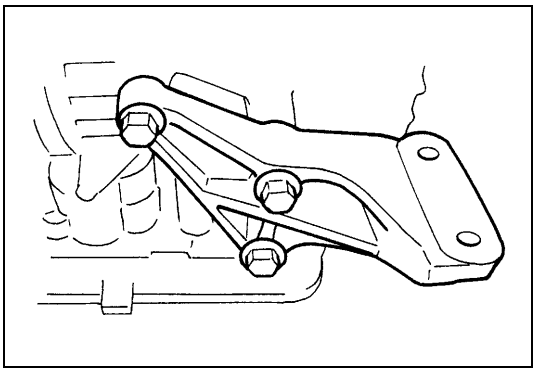

2) Remove engine mounting LH bracket.

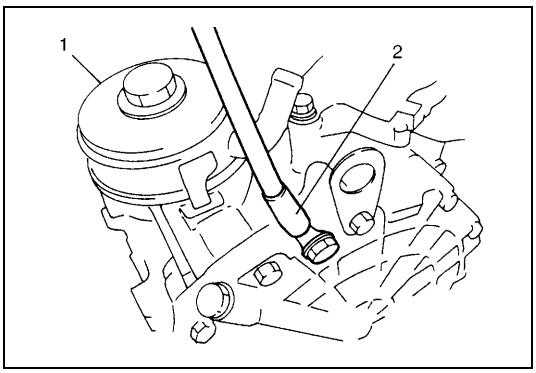

3) Remove oil cooler (1) and battery ground cable (2) (if still attached).

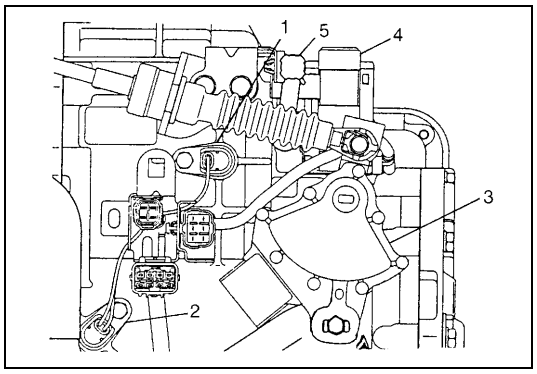

4) Remove output shaft speed sensor (1) and input shaft speed sensor (2).
5) Remove transmission range sensor (3).
6) Remove dropping resistor (4).
7) Remove breather hose (5).

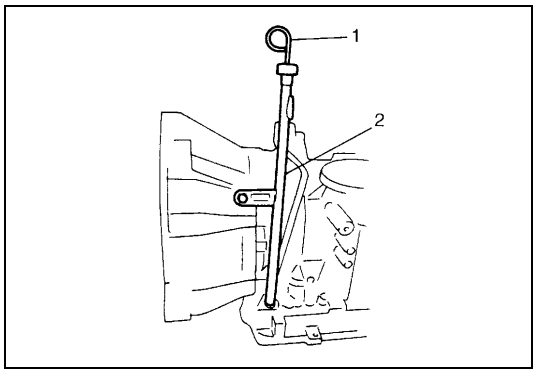

8) Remove A/T fluid level gauge (1) and filler tube (2).

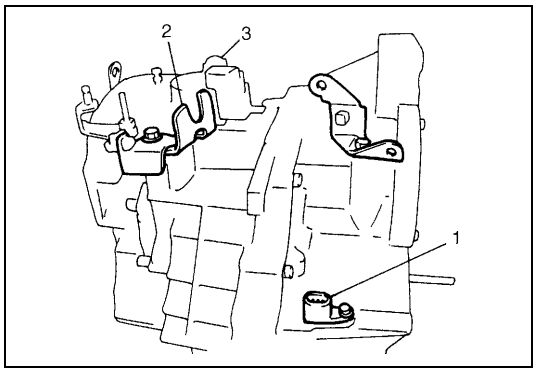

9) Remove vehicle speed sensor (1) (for speedometer), shift cable bracket (2) and connector clamp bracket (3).

10) Remove oil pan and oil pan gasket.

NOTE:

- **For removal of oil pan, do not turn transmission over as this will contaminate valve body with foreign materials in the bottom of oil pan.**
- **When removing oil pan, tap around it lightly with a plastic hammer. Do not force it off by using a screwdriver or the like.**

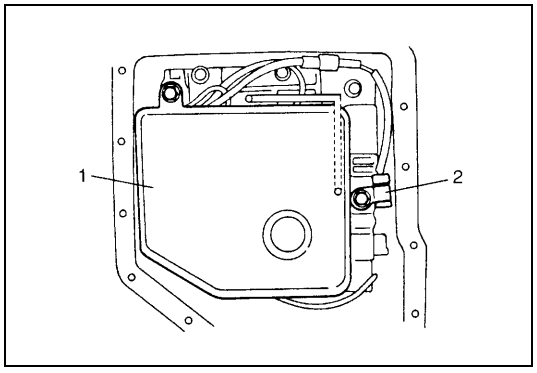

11) Remove oil strainer assembly (1), and detach transmission temperature sensor (2).

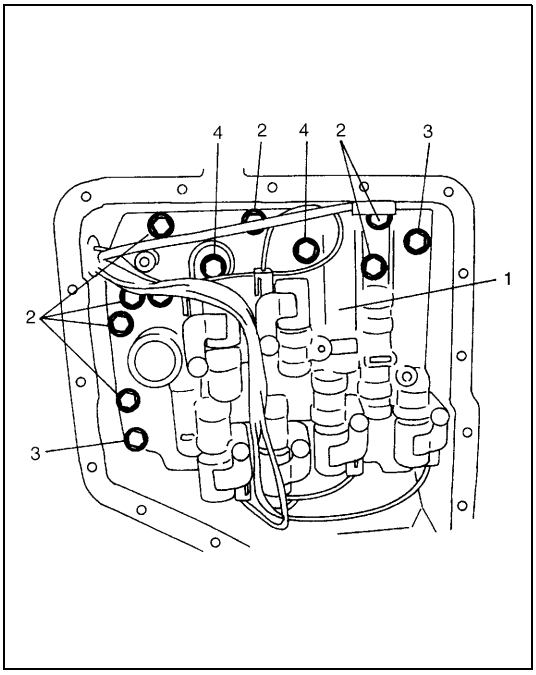

12) Disconnect couplers from solenoid valves, and transmission temperature sensor.
    Remove transmission temperature sensor.
13) Remove valve body assembly (1).

CAUTION:
Be careful not to let manual valve fall off when removing valve body assembly.

NOTE:
There are three kinds of bolts (bolts A, B and C) fixing valve body assembly.

14) Remove solenoid harness assembly.

2. Bolt A
3. Bolt B
4. Bolt C

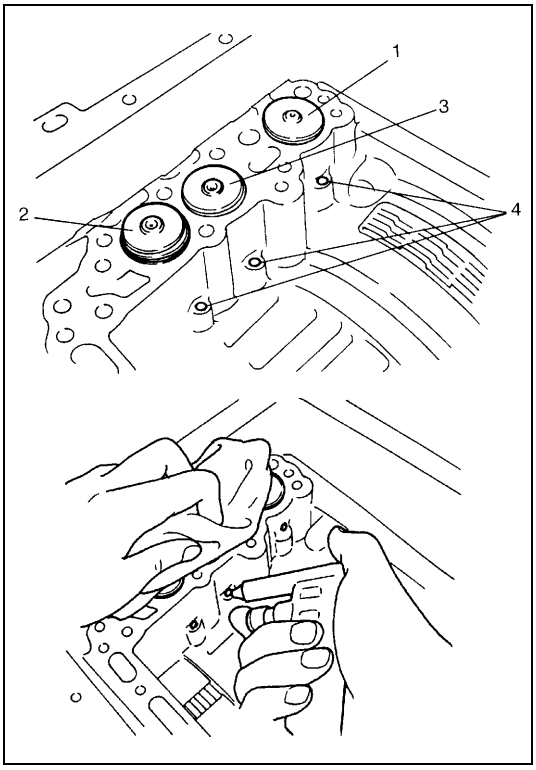

15) Remove accumulator pistons and springs.
    To remove C0 (1), C2 (2) and B1 (3) accumulator pistons and springs, position a rag on pistons to catch each piston. To remove pistons, force low-pressure compressed air (1 kg/cm^2, 15 psi, 100 kPa, max) into hole (4) as shown in figure, and pop each piston into the rag.
    To remove B0 and C1 accumulator pistons and springs, remove each snap ring and accumulator spacer, then remove spring and piston.

NOTE:
Do not push accumulator pistons with fingers or anything before removing them. Pushing them may cause compressed fluid in accumulator to spew out of hole and get to your face and clothes.

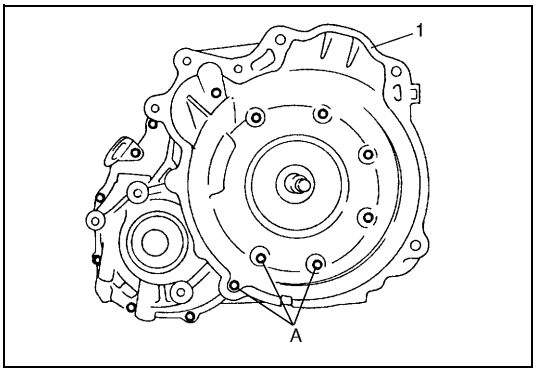

16) Remove torque converter housing (1).
    a) Remove housing bolts.
    b) Remove housing while tapping around it lightly with a plastic hammer.

NOTE:
Never reuse bolts A shown in figure.

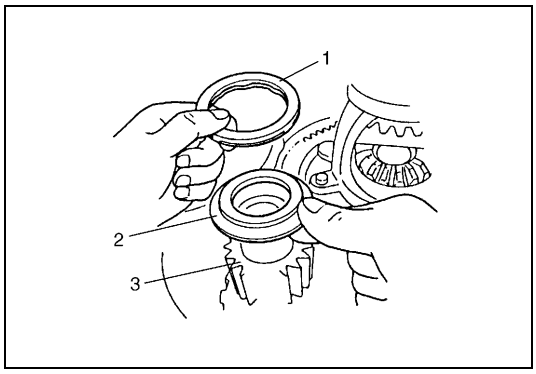

17) Remove thrust needle roller bearing (1) and thrust bearing race (2) from the top of counter driven gear assembly (3).

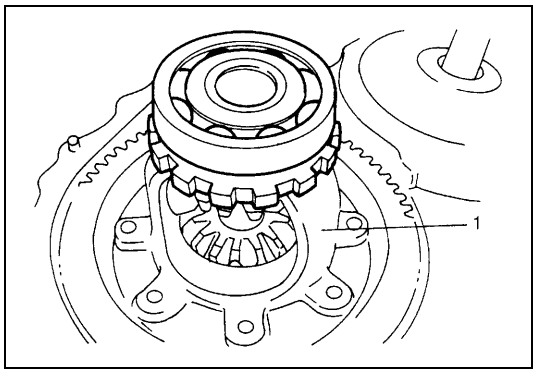

18) Remove differential gear assembly (1).

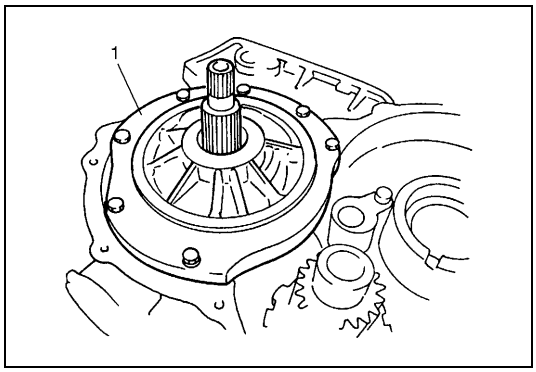

19) Remove oil pump assembly and gasket (1).

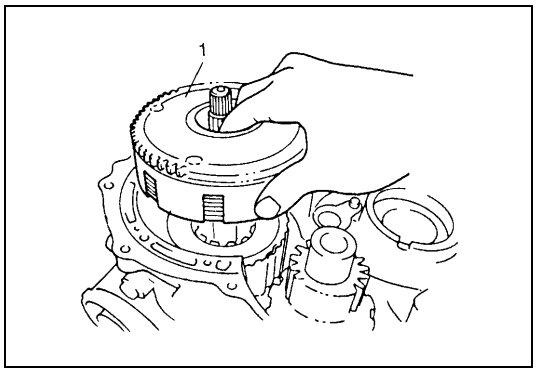

20) Remove front clutch assembly (1).

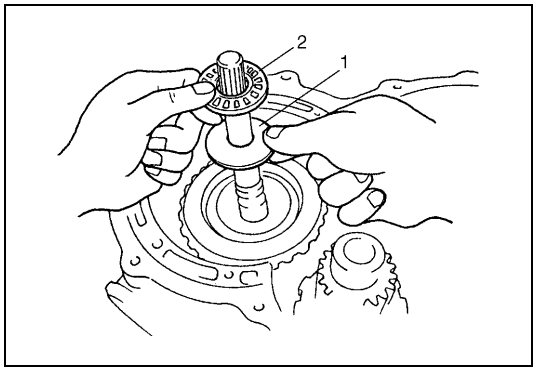

21) Remove thrust bearing race (1) and thrust needle roller bearing (2).

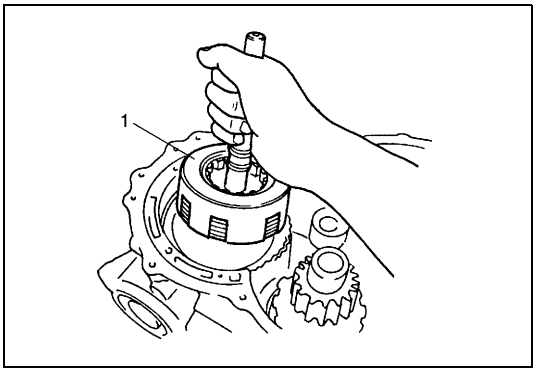

22) Remove rear clutch assembly (1).

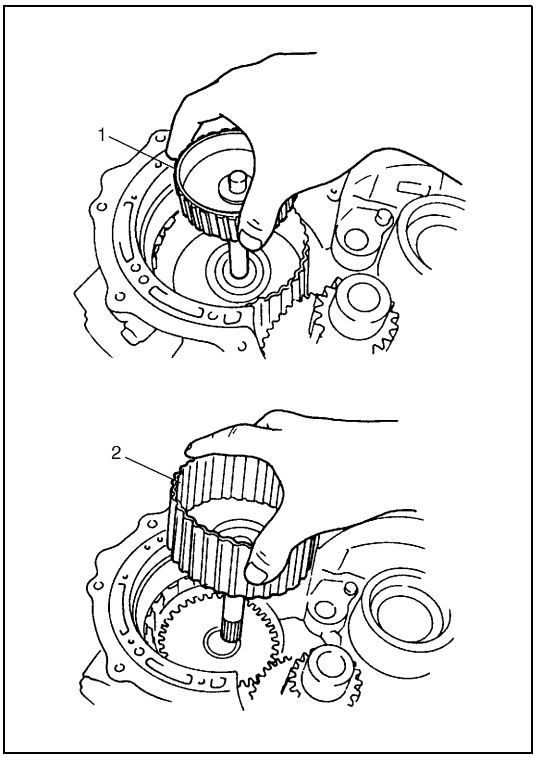

23) Remove intermediate shaft assembly (1) and follow shaft assembly (2).

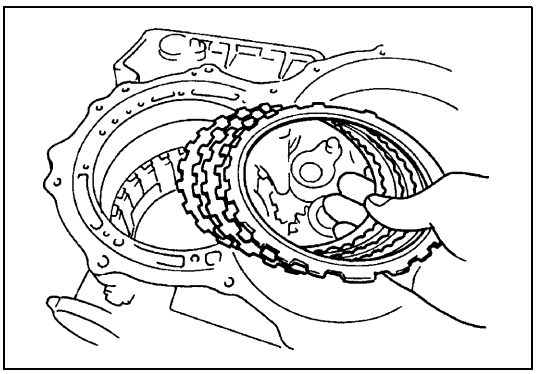

24) Remove reverse brake (B2) snap ring, brake flange, brake discs, brake plates and cushion plate.

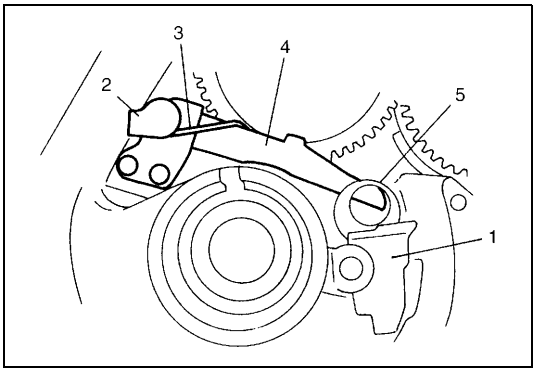

25) Remove oil guide plate (1) parking lock pawl cover (2), shaft, torsional spring (3) and parking lock pawl (4).
26) Remove parking lock pawl sleeve (5).

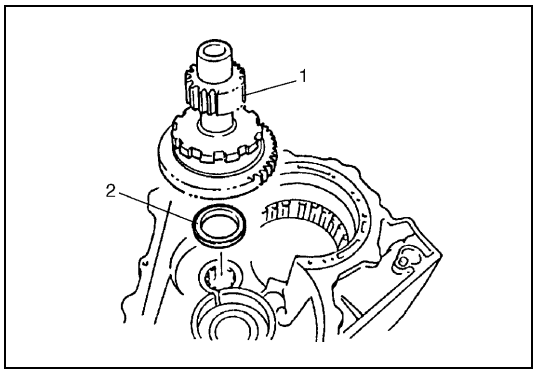

27) Remove counter driven gear assembly (1) and thrust needle roller bearing (2).

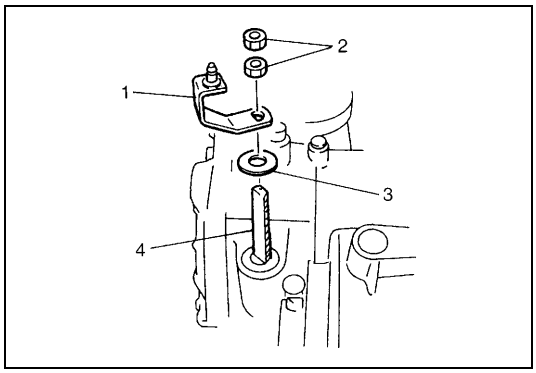

28) Remove control shift lever (1), nuts (2), washer (3) from manual shift shaft (4).

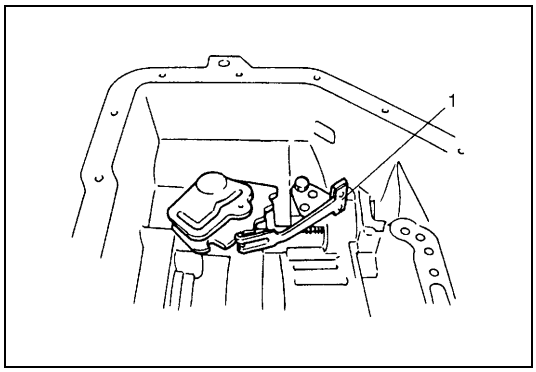

29) Remove detent spring (1).

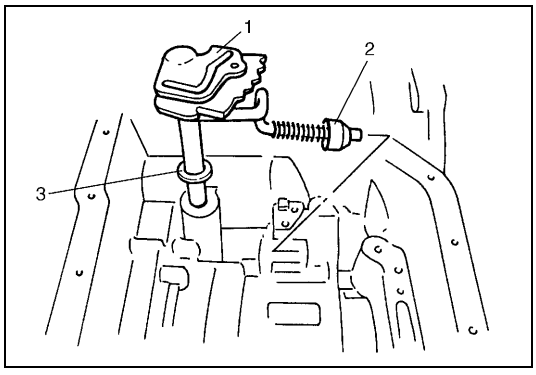

30) Remove manual shift shaft (1) with parking lock rod (2), and washer (3) from transmission case.

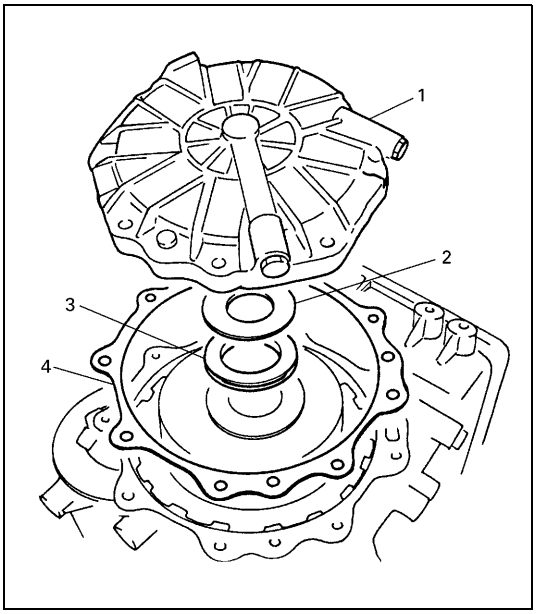

31) Remove rear cover assembly (1), thrust washer (2) and thrust needle roller bearing (3).
Remove gasket (4).

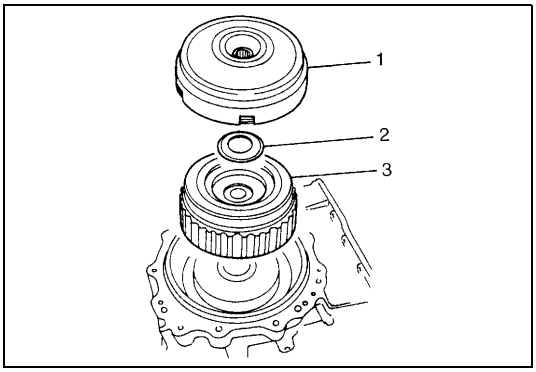

32) Remove direct clutch (C0) assembly (1), thrust roller bearing (2) and rear planetary sun gear No.1 assembly (3).

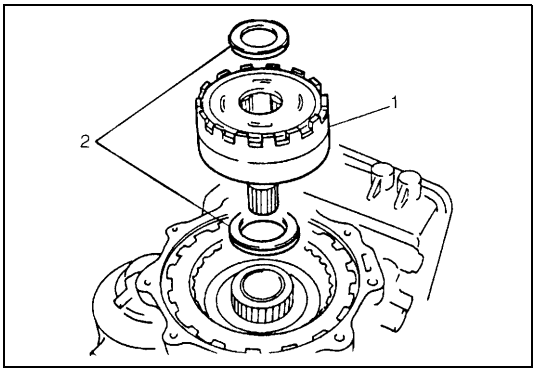

33) Remove planetary set (1) with bearing, thrust needle roller bearing (2).

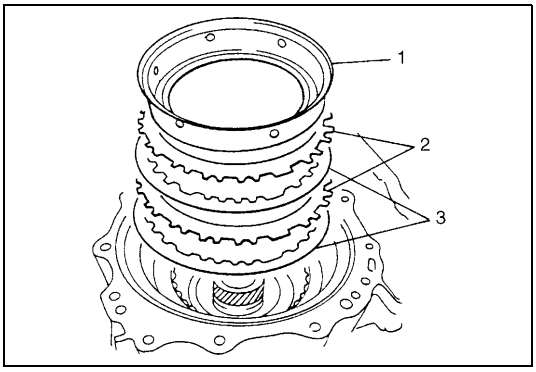

34) Remove O/D brake (B0) piston adapter (1), B0 plates (2) and discs (3).

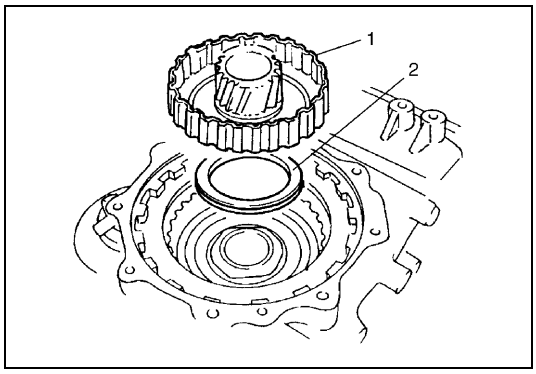

35) Remove planetary sun gear No.2 (1) and thrust needle roller bearing (2).

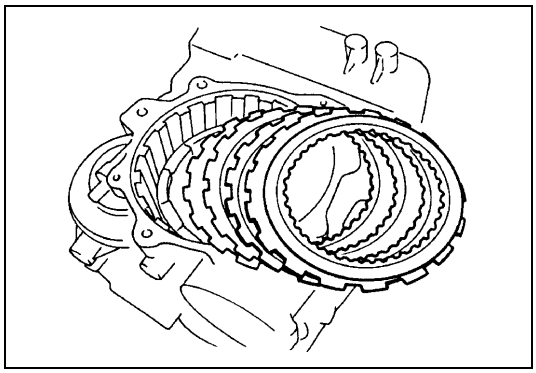

36) Remove snap ring, then remove brake flange and disc.
37) Remove snap ring, then remove brake discs and plates (B1 brake).

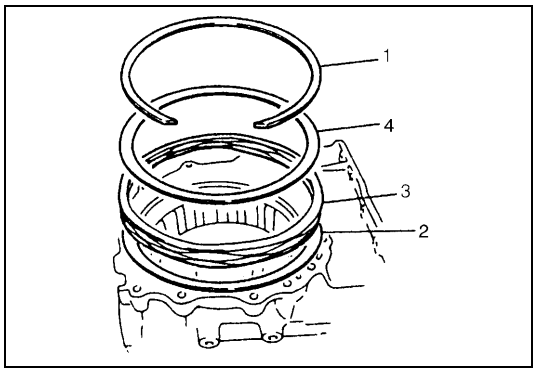

38) Remove snap ring (1), then O/D brake return spring seat (2), return spring (3) and spring retainer (4).

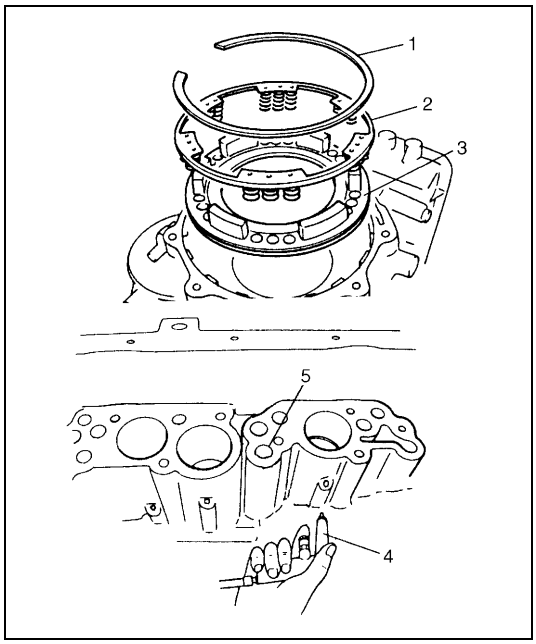

39) Remove snap ring (1) then remove 1st & 2nd brake piston return spring subassembly (2) and 1st & 2nd brake piston (3).
To remove 1st & 2nd brake piston, force low-pressure compressed air (1 kg/cm^2, 15 psi, 100 kPa, max) into hole (5) shown in figure and pop out 1st & 2nd brake piston into a rag.

4. Air gun

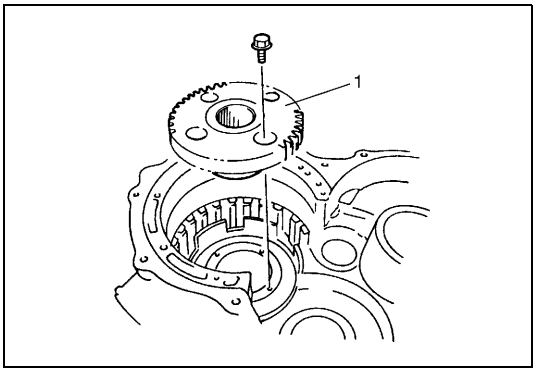

40) Remove counter drive gear (1).

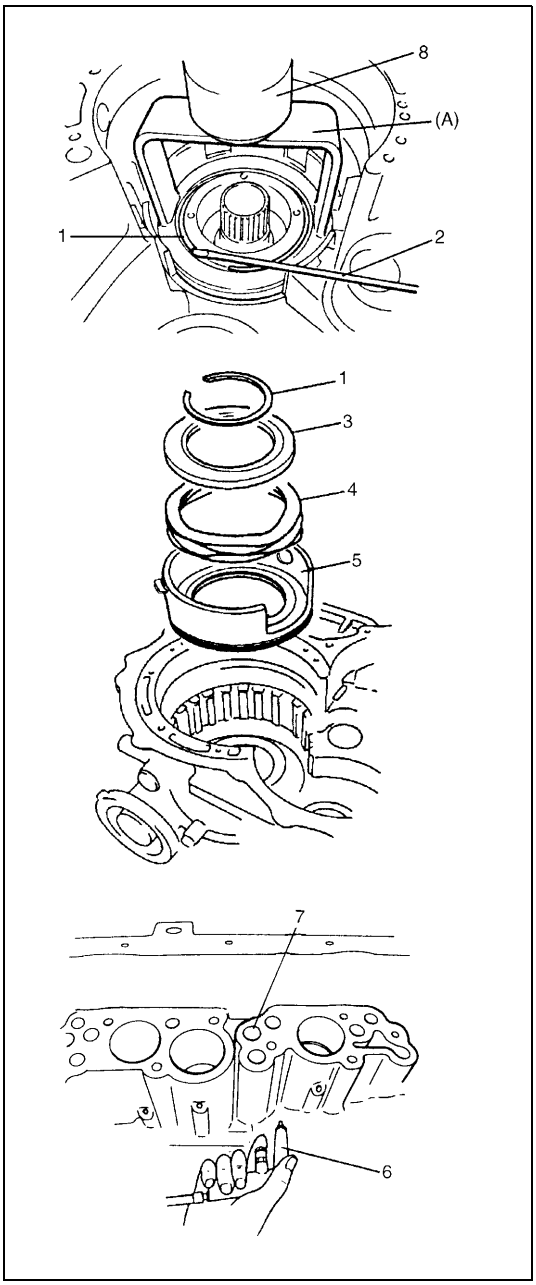

41) Use hydraulic press (8) and special tool to compress wave spring (4), then remove snap ring (1).

Special tool
(A) : 09926-96040

NOTE:

- **Do not compress wave spring more than necessary.**
- **Do not reuse snap ring (1).**

42) Remove reverse brake piston seat (3), wave spring (4) and reverse brake piston (5).
To remove reverse brake piston, force low-pressure compress air (1 kg/cm^2, 15 psi, 100 kPa, max) into hole (7) shown in figure, and pop out piston into a rag.

2. Flat end rod or the like
6. Air gun

INSPECTION

Clutch and Brake Discs

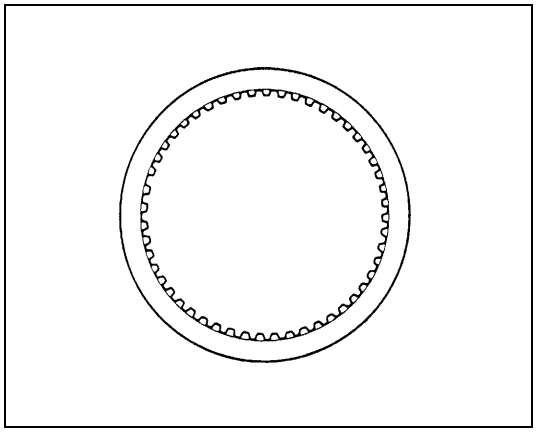

Dry and inspect them for pitting, burn flaking, wear, glazing, cracking, charring and chips or metal particles imbedded in lining. If discs show any of the above conditions, replacement is required.

NOTE:

- **If disc lining is exfoliated or discolored, replace all discs.**
- **Before assembling new discs, soak them in A/T fluid for at least two hours.**

Clutch and Brake Plates and Flanges

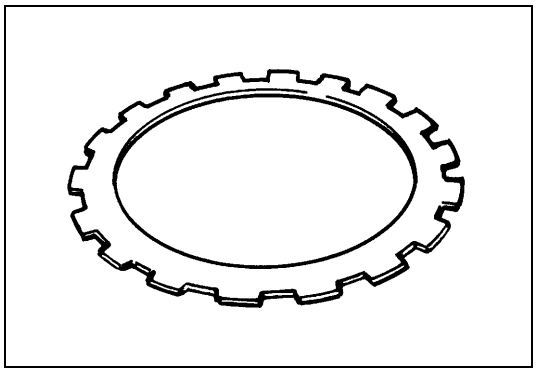

Dry plates and check for discoloration. If plate surface is smooth and even color smear is indicated, the plate should be reused. If severe heat spot discoloration or surface scuffing is indicated, the plate must be replaced.

1st & 2nd Brake Piston Return Spring Subassembly

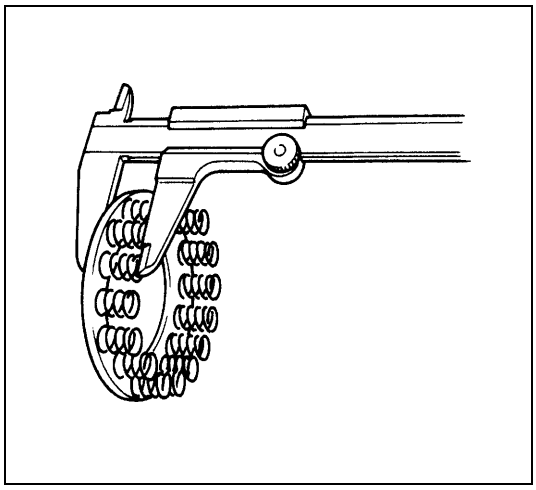

Measure height of 1st & 2nd brake piston return spring.

Height of 1st & 2nd brake piston return spring
20.81 mm (0.819 in.)

NOTE:

- **Do not apply excessive force when measuring spring height.**
- **Perform measurement at several points.**

Evidence of extreme heat or burning in the area of clutch may have caused springs to take a heat set and would require their replacement.

DISASSEMBLY/ASSEMBLY OF SUBASSEMBLY

CAUTION:

- **Keep component parts in group for each subassembly and avoid mixing them up.**
- **Clean all parts with cleaning solvent thoroughly and air dry them.**
- **Use kerosene or automatic transmission fluid as cleaning solvent.**
- **Do not use wiping cloths or rags to clean or dry parts.**
- **All oil passages should be blown out and checked to make sure that they are not obstructed.**
- **Keep face and eyes away from solvent spray while air blowing parts.**
- **Check mating surface for irregularities and remove them, if any, and clean it again.**
- **Soak new clutch discs and brake discs in transmission fluid for at least 2 hours before assembly.**
- **Replace all gaskets and O-rings with new ones.**
- **Apply automatic transmission fluid to all O-rings.**
- **When installing seal ring, be careful so that it is not expanded excessively, extruded or caught.**
- **Replace oil seals that are removed and apply grease to their lips.**
- **Before installing, be sure to apply automatic transmission fluid to sliding, rolling and thrusting surface of all component part. Also after installation, make sure to check each part for proper operation.**
- **Always use torque wrench when tightening bolts.**

OIL PUMP

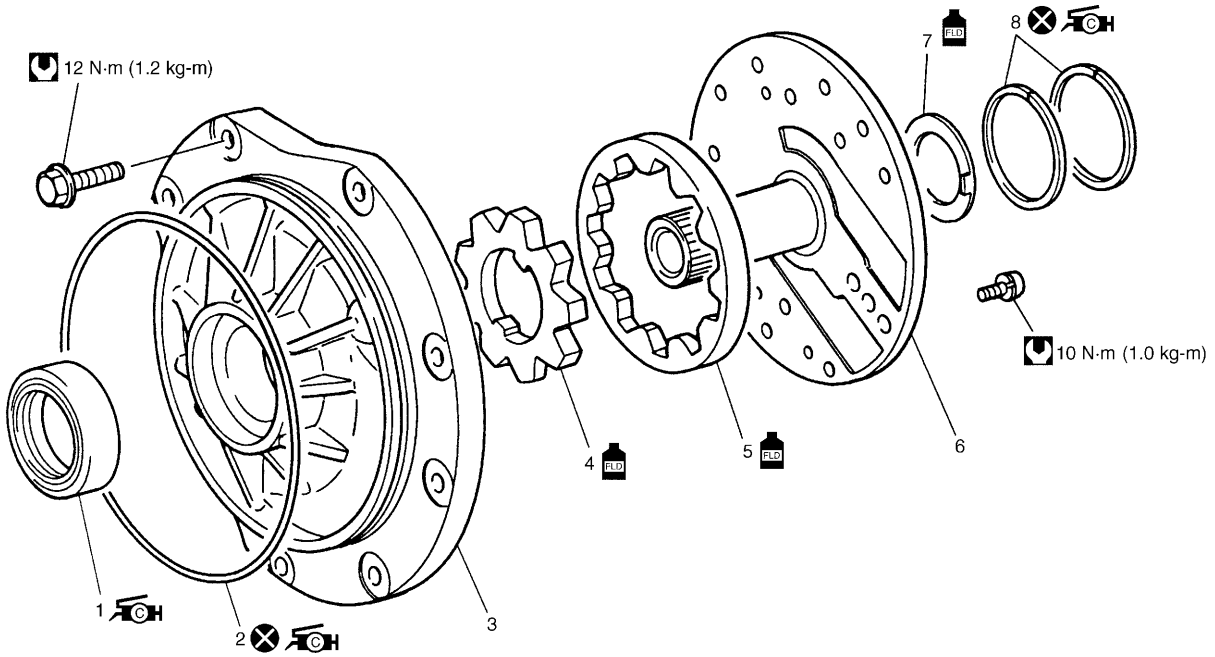

C/H	1. Oil seal : Apply grease 99000-25030 to oil seal lip.		7. Clutch drum thrust washer
C/H	2. D-ring : Apply grease 99000-25030 to all over surface.	C/H	8. Clutch drum oil seal ring : Apply grease 99000-25030 to all over surface.
	3. Oil pump body	FLD	Apply automatic transmission fluid.
	4. Oil pump drive gear		Tightening torque
	5. Oil pump driven gear		Do not reuse.
	6. Stator shaft assembly		

DISASSEMBLY

1) Remove D-ring from pump body.
2) Remove 2 oil seal rings and clutch drum thrust washer.
3) Remove 11 bolts.
4) Separate pump body from stator shaft assembly.
5) Remove oil seal from pump body.

INSPECTION

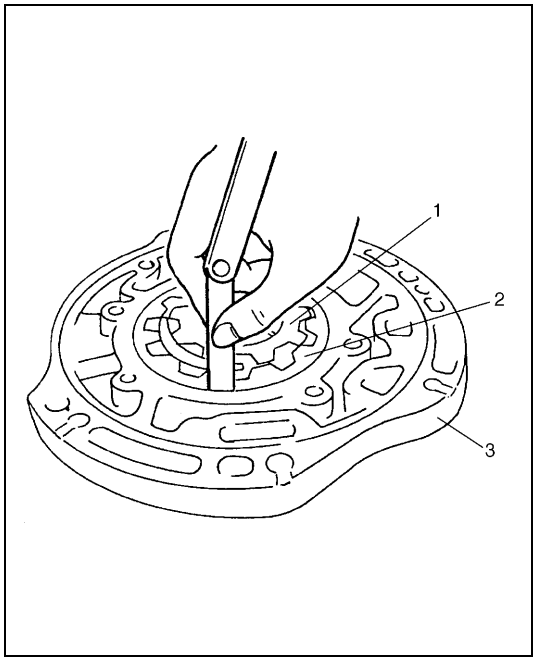

1) Inspect pump body oil seal.
   Check for wear, damage or cracks.
   Replace oil seal if necessary and apply grease to its lip portion slightly when it is installed.
2) Check body clearance of driven gear.
   Push driven gear to one side of body. Using a feeler gauge, measure clearance between driven gear and body.
   If clearance exceeds its standard value, replace oil pump assembly.

Clearance between oil pump driven gear and oil pump body
Standard : 0.08 – 0.15 mm (0.0027 – 0.0059 in.)
Limit : 0.30 mm (0.018 in.)

1.	Oil pump drive gear
2.	Driven gear
3.	Body

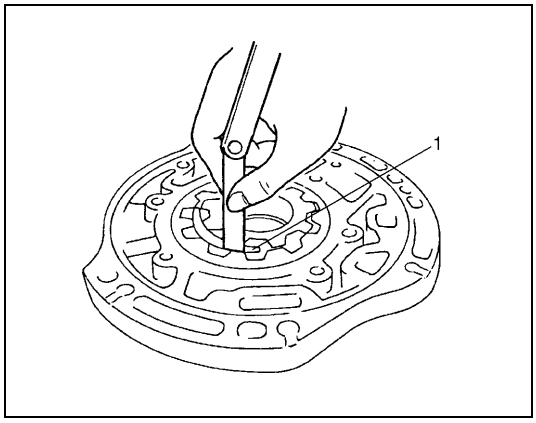

3) Check tip clearance of both drive and driven gears.
   Measure radial clearance between gear tooth and crescent.
   If clearance exceeds its standard value, replace oil pump assembly.

Radial clearance between oil pump gear tooth and oil pump crescent
Standard : 0.13 – 0.20 mm (0.0051 – 0.0079 in.)
Limit : 0.30 mm (0.018 in.)

1.	Pump body crescent portion

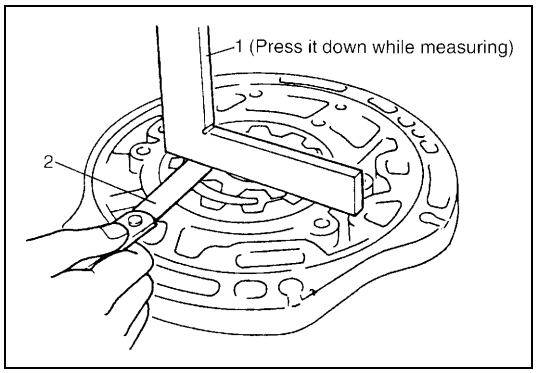

4) Check side clearance of both gears.
   Using a straightedge (1) and a feeler gauge (2), measure side clearance between gear and pump body.
   If clearance exceeds its standard value, replace oil pump assembly.

Side clearance between gear and oil pump body
Standard : 0.02 – 0.04 mm (0.0008 – 0.0015 in.)

ASSEMBLY

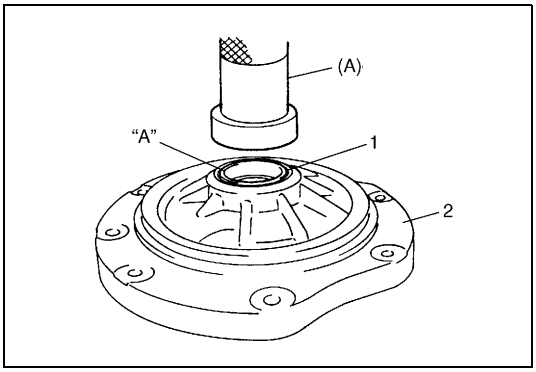

1) Install pump body oil seal (1)
   Use special tool and hammer to install it, and then apply grease to its lip portion.

   Special tool
   (A) : 09913-85210

   "A": Grease 99000-25030

2) Install driven gear and drive gear to pump body (2) after applying A/T fluid to gears.

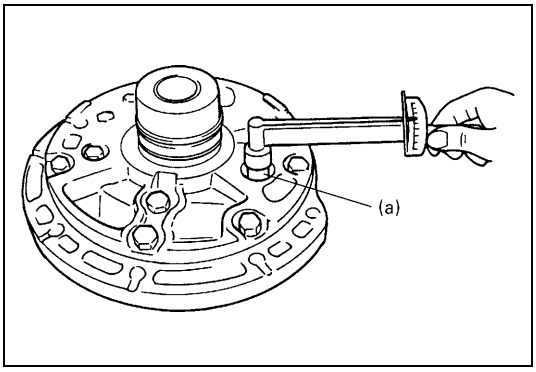

3) Install stator shaft assembly to pump body and tighten 11 pump cover bolts to specification.

   Tightening torque
   Oil pump cover bolts (a) : 10 N·m (1.0 kg-m, 7.5 lb-ft)

4) Install 2 new oil seal rings to stator shaft.
5) Apply grease to 2 oil seal rings.
6) Install new D-ring to which grease is applied and make sure that it is not twisted or extruded.
7) Check drive gear for smooth rotation.

FRONT CLUTCH (C2 CLUTCH)

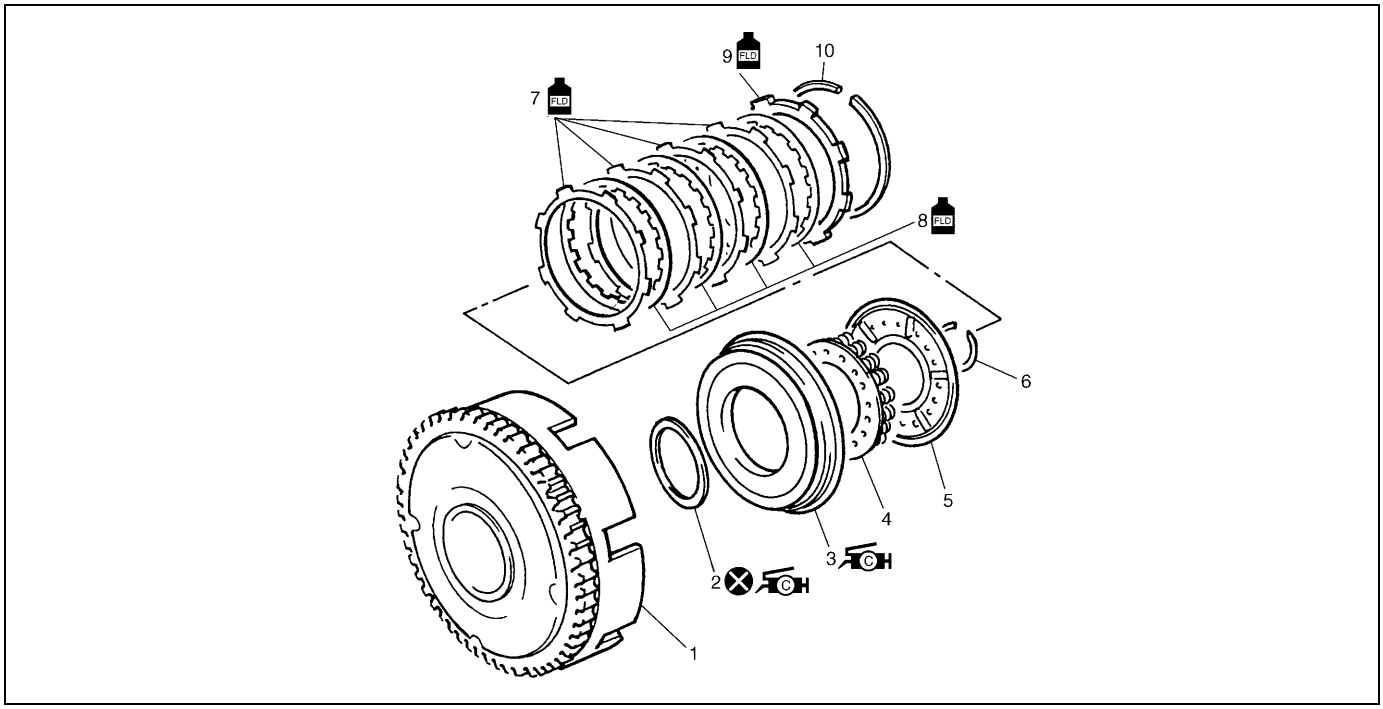

	1. Front clutch No.1 drum	7. Clutch plate
C	2. D-ring : Apply grease 99000-25030 to all over surface.	8. Clutch disc
C	3. Front clutch piston : Apply grease 99000-25030 to the lip of the piston.	9. Clutch flange
	4. Front clutch return spring seat	10. Snap ring
	5. Front clutch balancer	FLD Apply automatic transmission fluid.
	6. Shaft snap ring	Do not reuse.

DISASSEMBLY

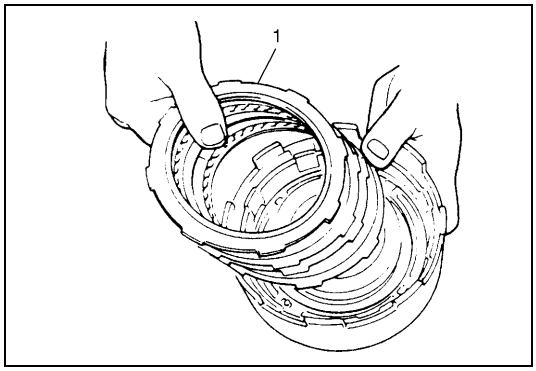

1) Remove snap ring.
2) Remove flange (1), discs and plates.

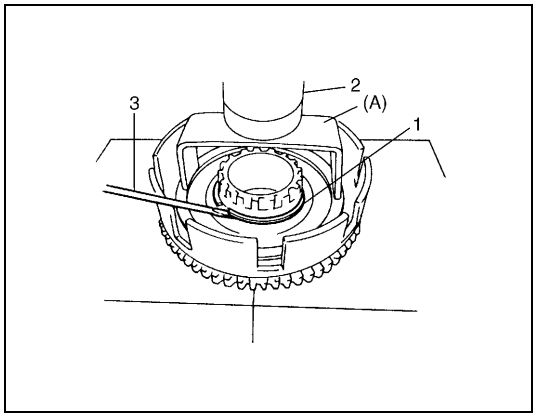

3) Remove shaft snap ring (1).
   Compress piston return springs and remove shaft snap ring. Place special tool (clutch spring compressor) on spring seat and compress spring with a press (2), and then remove shaft snap ring, using a flat end rod or the like (3).

CAUTION:
Do not push down return spring more than necessary.

Special tool
(A) : 09926-96010

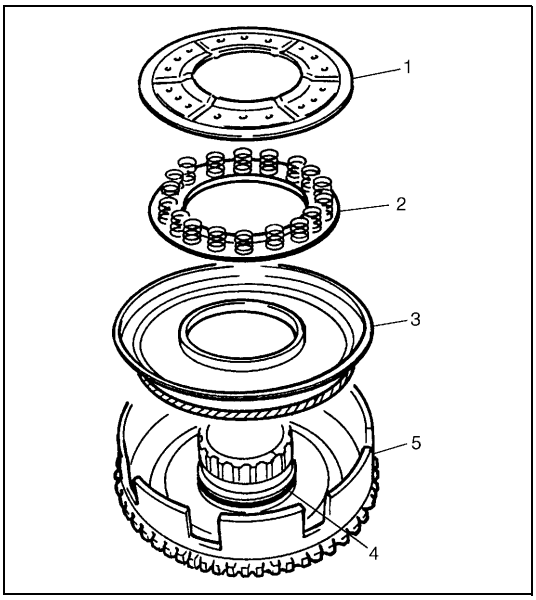

4) Remove front clutch balancer (1) and front clutch return spring seat (2).
5) Remove front clutch piston (3).
   Blow compressed air through input shaft oil hole to remove piston. If piston does not pop out, take it out with long nose pliers.
6) Remove D-ring (4) from front clutch No.1 drum (5).

INSPECTION

Clutch Discs, Plates and Flange

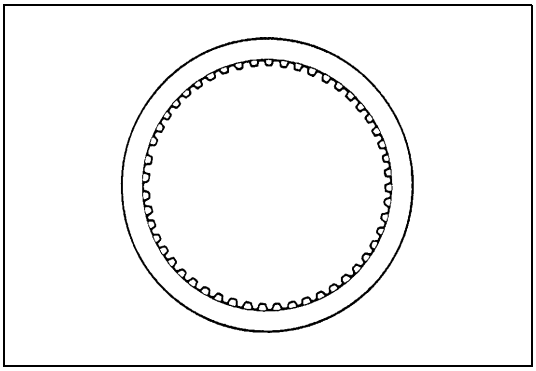

Check that sliding surfaces of discs, plates and flanges are not worn or burnt. If necessary, replace.

NOTE:

- **If disc lining is exfoliated or discolored, replace all discs.**
- **Before assembling new discs, soak them in A/T fluid for at least two hours.**

Front Clutch Return Spring Seat

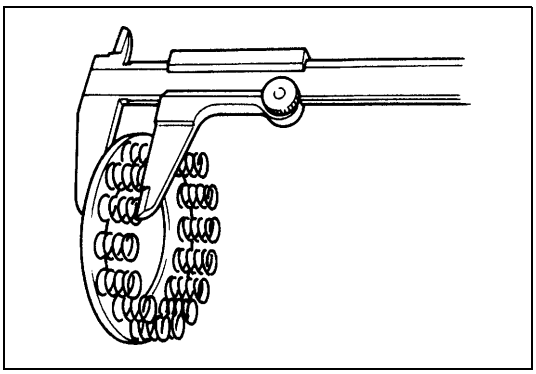

Measure height of front clutch return spring.

Height of front clutch return spring
: 14.85 mm (0.585 in.)

NOTE:

- **Do not apply excessive force when measuring spring height.**
- **Perform measurement at several points.**

Front Clutch Piston Lip and Front Clutch Balancer Lip

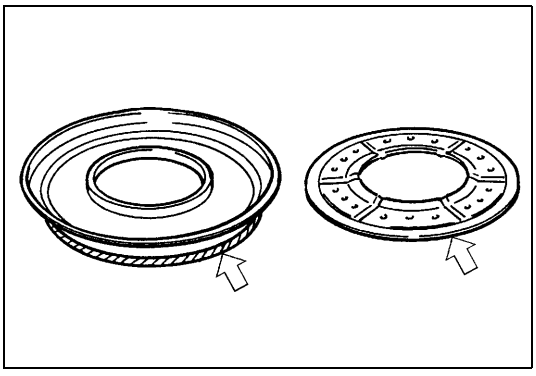

Check each lip for wear, deformation, cut, and/or hardening. If necessary, replace.

ASSEMBLY

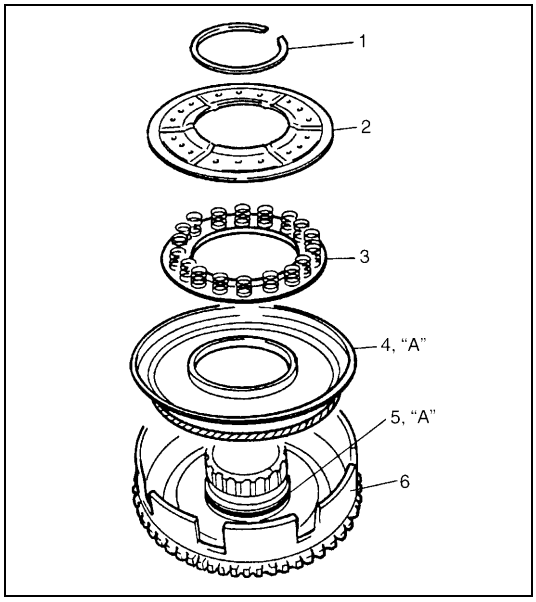

1) Install new D-ring (5) to front clutch No.1 drum.
   Apply grease to D-ring and fit it to drum.

"A" : Grease 99000-25030

2) Install piston (4) into front clutch No.1 drum (6).
   Use care that the piston lip does not get twisted or caught.
   Apply grease to the lip of the piston.

"A" : Grease 99000-25030

3) Install front clutch return spring (3) seat and front clutch balancer (2).

1. Snap ring

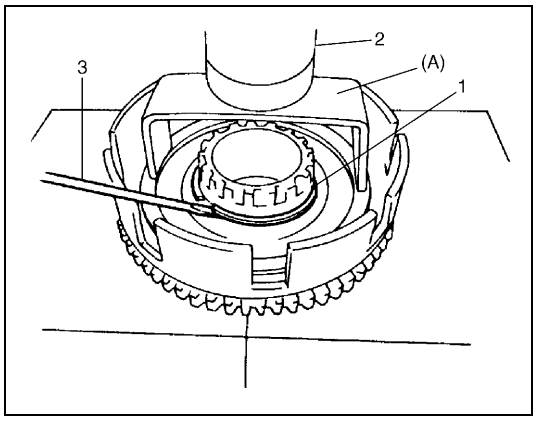

4) Install shaft snap ring (1).
   Compress return springs and install shaft snap ring in groove by using a flat end rod or the like (3).
   Place special tool (clutch spring compressor) on spring seat and compress springs with a press (2).

CAUTION:
Do not compress return spring more than necessary.

Special tool
(A) : 09926-96010

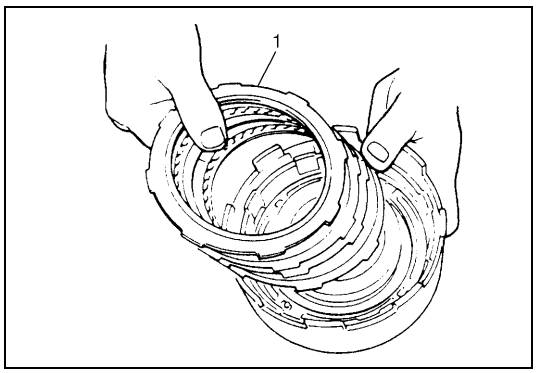

5) Install discs, plates and flange (1) in following order.
   (1) Plate → (2) Disc → (3) Plate → (4) Disc → (5) Plate → (6) Disc → (7) Plate → (8) Disc → (9) Flange

NOTE:

Before assembly, new discs should be soaked in automatic transmission fluid for at least 2 hours.

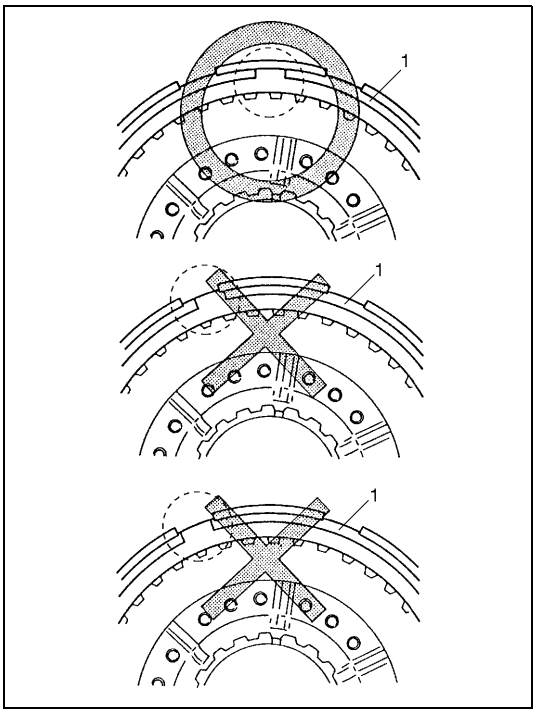

6) Install snap ring (1).

NOTE:

Make sure that the ends of the snap ring do not come to the opening of the front clutch No.1 drum.

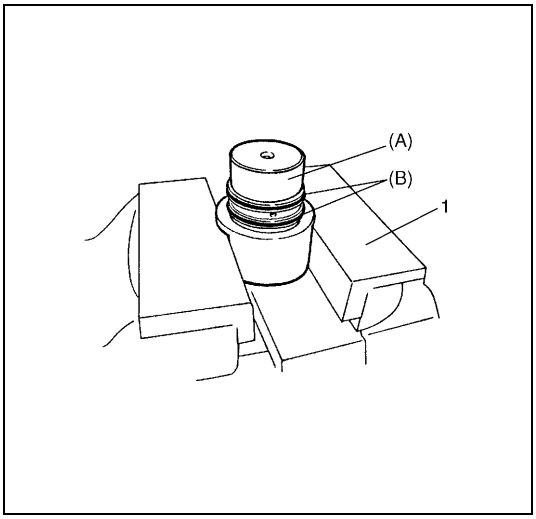

7) Place special tool (A) on soft jawed vise (1) and install 2 oil seal rings on special tool.

Special tool
(A) : 09926-26030
(B) : Clutch drum seal ring 22831-83E10 SUZUKI GENUINE PARTS

NOTE:

- **Clutch drum seal set has two seal rings in a set.**
- **Do not use the seal rings removed from oil pump assembly. It is not necessary to remove seal rings from special tool once installed.**

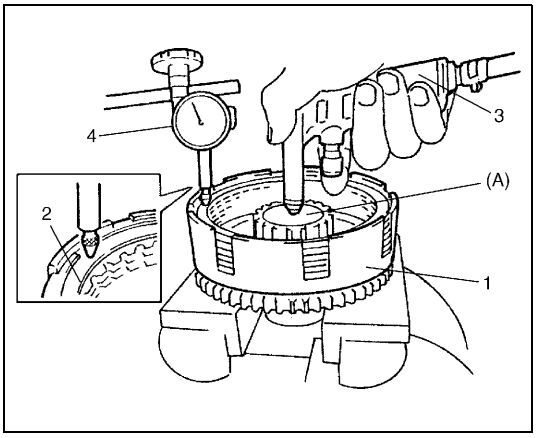

8) Place front clutch assembly (1) on special tool (A).
9) Set dial gauge (4) on the top of clutch flange (2) and measure clearance by blowing compressed air (4 kg/cm^2, 57 psi) as shown in figure.
If the clearance is out of specification, replace clutch discs, plates and flange.

Front clutch disc clearance
: 0.47 – 1.14 mm (0.0185 – 0.0448 in.)

3. Air gun

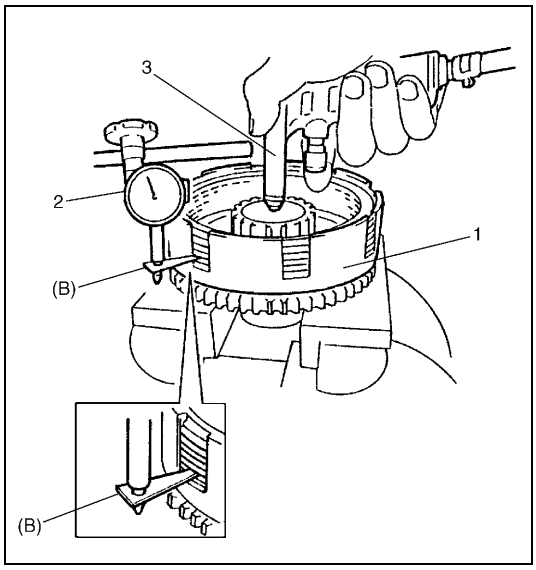

10) Attach special tool (B) to dial gauge (2) and set them on the lowest clutch plate.

Special tool
(B) : 09952-06010

11) Measure piston stroke by blowing compressed air (4 kg/cm^2, 57 psi) as shown in figure.
If the piston stroke is out of specification, replace clutch discs, plates and flange.

Front clutch piston stroke
: 1.46 – 1.64 mm (0.0575 – 0.0646 in.)

1.	Front clutch assembly
3.	Air gun

REAR CLUTCH (C1 CLUTCH)

C•H	1. Input shaft oil seal ring : Apply grease 99000-25030 to all over surface.		8. Clutch plate
	2. Input shaft subassembly		9. Clutch disc
C•H	3. D-ring : Apply grease 99000-25030 to all over surface.		10. Clutch flange
C•H	4. Rear clutch piston : Apply grease 99000-25030 to the lip of the piston.		11. Snap ring
	5. Rear clutch return spring seat	FLD	Apply automatic transmission fluid.
	6. Rear clutch balancer	⊗	Do not reuse.
	7. Shaft snap ring		

DISASSEMBLY

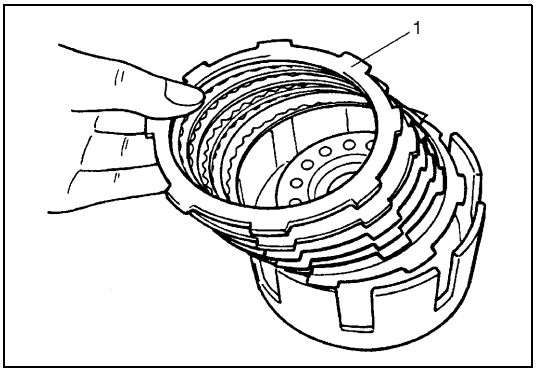

1) Remove snap ring.
2) Remove flange (1), discs and plates.

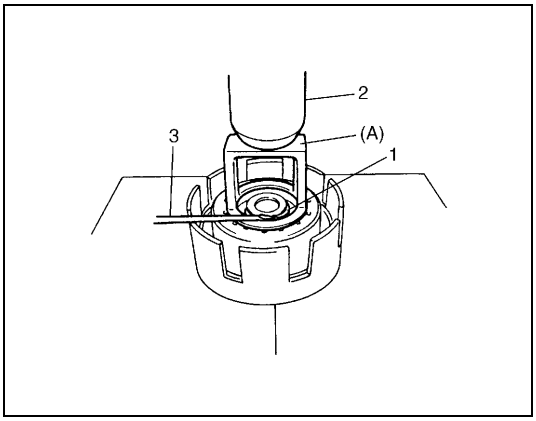

3) Remove shaft snap ring (1).
   Compress piston return springs and remove shaft snap ring. Place special tool (clutch spring compressor) on spring seat and compress spring with a press (2), and then remove shaft snap ring, using a flat end rod or the like (3).

CAUTION:
Do not push down return spring more than necessary.

Special tool
(A) : 09926-96020

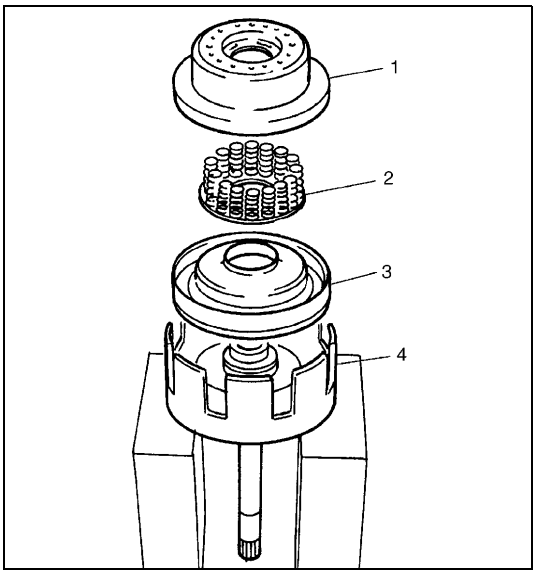

4) Remove rear clutch balancer (1) and rear clutch return spring seat (2).
5) Remove rear clutch piston (3).
   If piston does not pop out, blow compressed air through input shaft oil hole to remove piston.
6) Remove D-ring, and oil seals from input shaft subassembly (4).

INSPECTION

Clutch Discs, Plates and Flange

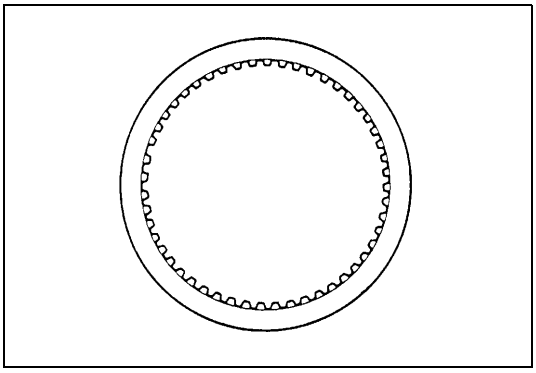

Check that sliding surfaces of discs, plates and flanges are not worn or burnt. If necessary, replace.

NOTE:

- **If disc lining is exfoliated or discolored, replace all discs.**
- **Before assembling new discs, soak them in A/T fluid for at least two hours.**

Rear Clutch Return Spring Seat

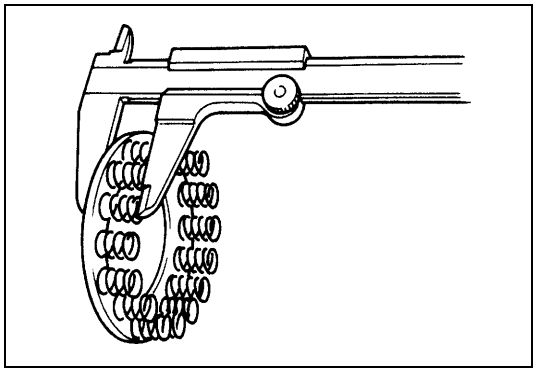

Measure height of overdrive clutch return spring.

Height of overdrive clutch return spring
: 22.01 mm (0.867 in.)

NOTE:

- **Do not apply excessive force when measuring spring height.**
- **Perform measurement at several points.**

ASSEMBLY

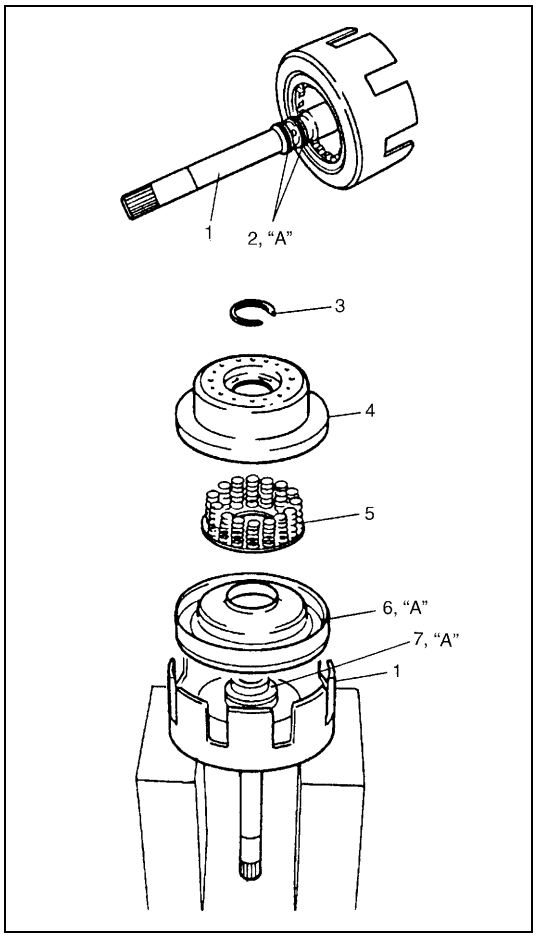

1) Install new D-ring (7) and oil seals (2) to input shaft subassembly. Apply grease to D-ring and fit it to input shaft subassembly (1).

"A" : Grease 99000-25030

2) Install piston (6) into input shaft subassembly.
Apply grease to the lip of the piston.

"A" : Grease 99000-25030

Use care that the lip does not get twisted or caught.

3) Install rear clutch return spring seat (5) and rear clutch balancer (4).

3. Snap ring

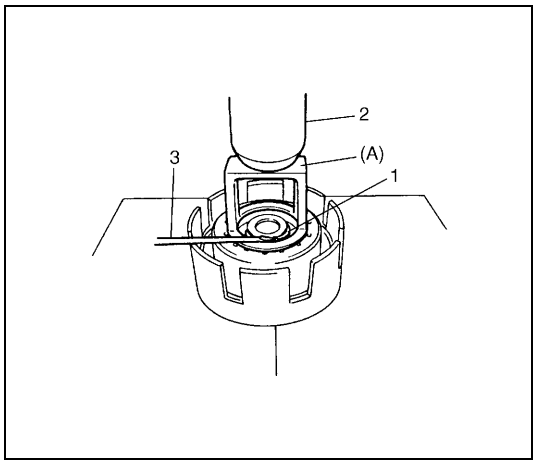

4) Install shaft snap ring (1).
Compress return springs and install shaft snap rings in groove by using a flat end rod or the like (3).
Place special tool (clutch spring compressor) on spring seat and compress springs with a press (2).

CAUTION:
Do not compress return spring more than necessary.

Special tool
(A) : 09926-96020

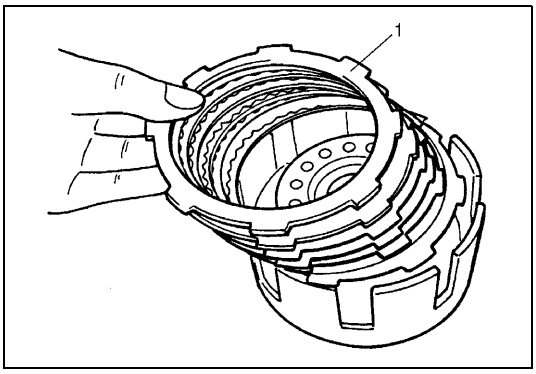

5) Install discs, plates and flange (1) in following order.
(1) Plate → (2) Disc → (3) Plate → (4) Disc → (5) Plate → (6) Disc → (7) Plate → (8) Disc → (9) Plate → (10) Disc → (11) Flange

NOTE:

Before assembly, new discs should be soaked in automatic transmission fluid for at least 2 hours.

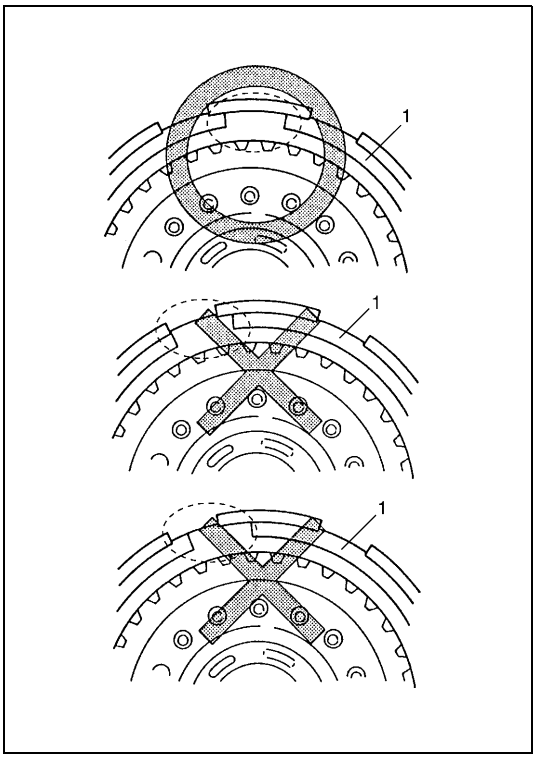

6) Install snap ring (1).

NOTE:

Make sure that the ends of the snap ring do not come to the opening of the input shaft subassembly.

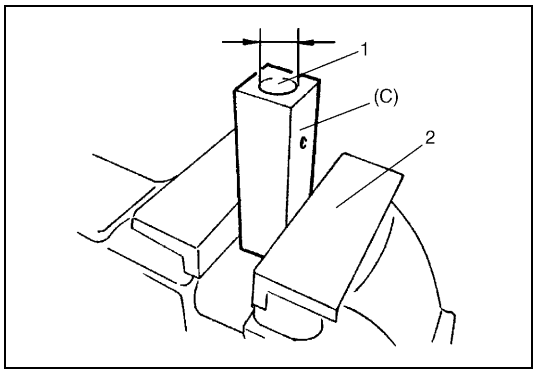

7) Place special tool (C) on soft jawed vise (2) with wider opening (1) facing up.

Special tool
(C) : 09926-26040

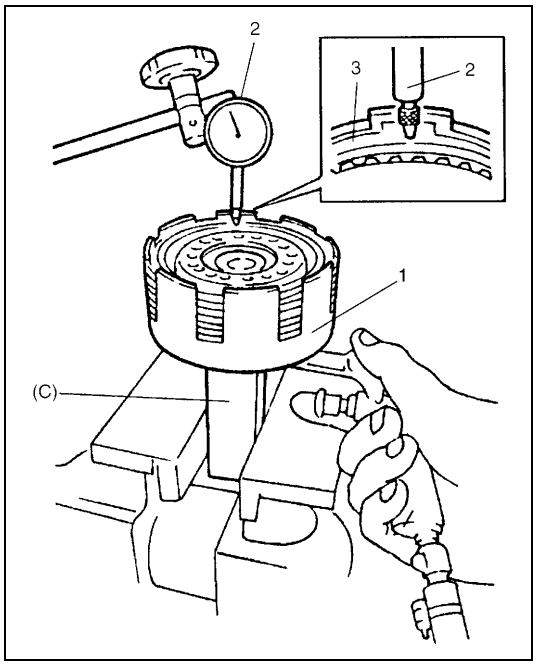

8) Place rear clutch assembly (1) on special tool (C).
9) Set dial gauge (2) on the top of clutch flange (3) and measure clearance by blowing compressed air (4 kg/cm^2, 57 psi) as shown in figure.
If the clearance is out of specification, replace clutch discs, plates and flange.

Rear clutch disc clearance
: 0.80 – 1.40 mm (0.031 – 0.055 in.)

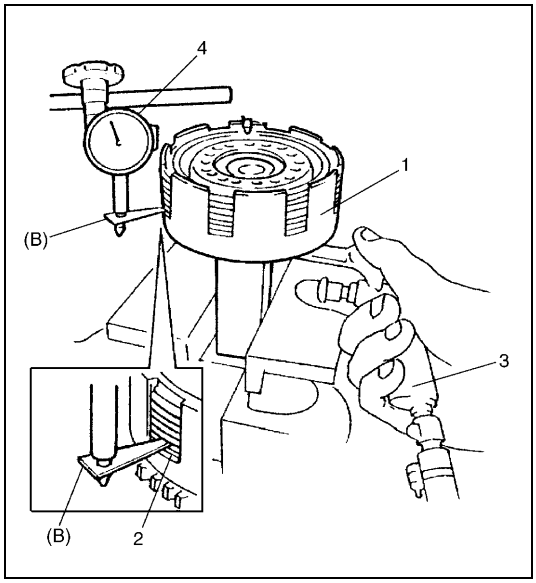

10) Attach special tool (B) to dial gauge (4) and set them on the lowest clutch plate (2).

Special tool
(B) : 09952-06010

11) Measure piston stroke by blowing compressed air (4 kg/cm^2, 57 psi) as shown in figure.
If the piston stroke is out of specification, replace clutch discs, plates and flange.

Rear clutch piston stroke
: 1.93 – 2.13 mm (0.076 – 0.084 in.)

1.	Rear clutch assembly
3.	Air gun

DIRECT CLUTCH (C0 CLUTCH)

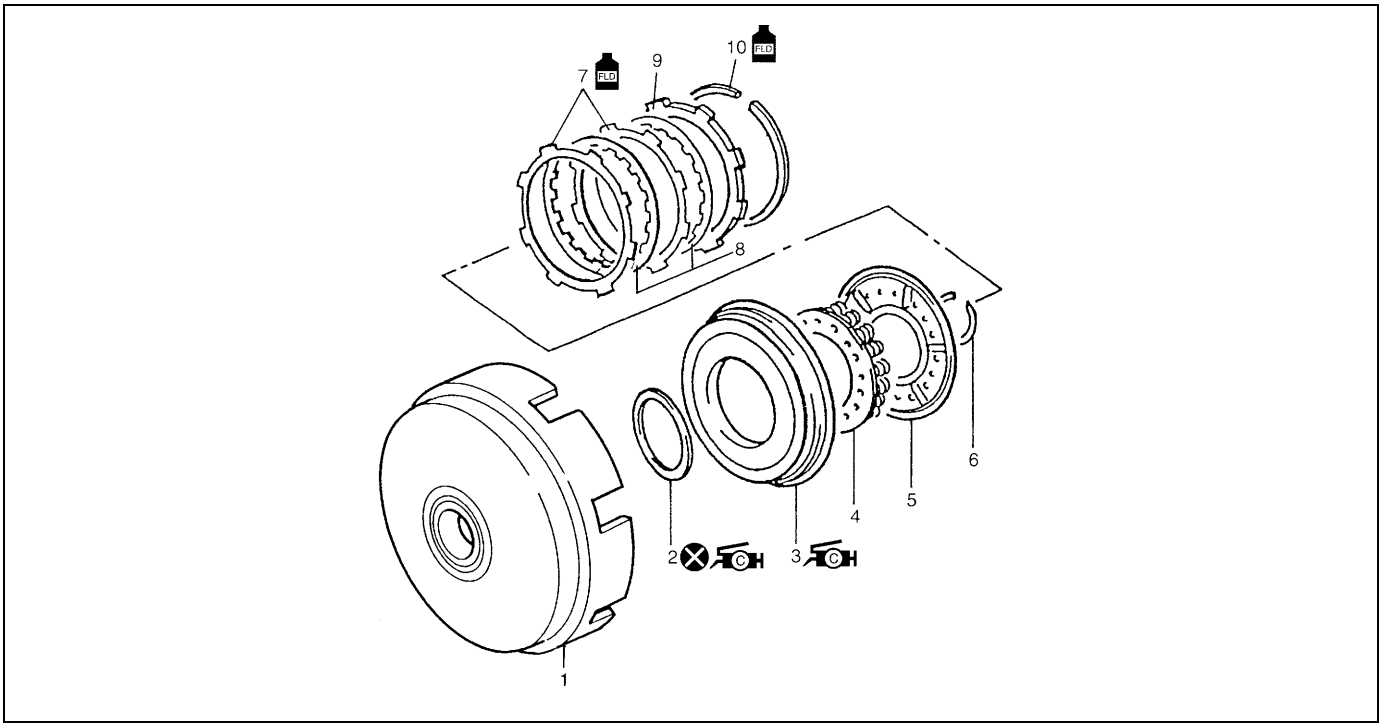

	1. Direct clutch (C0) No.1 drum	5. Direct clutch balancer	9. Clutch flange
C H	2. D-ring : Apply grease 99000-25030 to all over surface.	6. Shaft snap ring	10. Snap ring
C H	3. Direct clutch piston : Apply grease 99000-25030 to the lip of the piston.	7. Clutch plate	FLD Apply automatic transmission fluid.
	4. Direct clutch return spring seat	8. Clutch disc	Do not reuse.

DISASSEMBLY

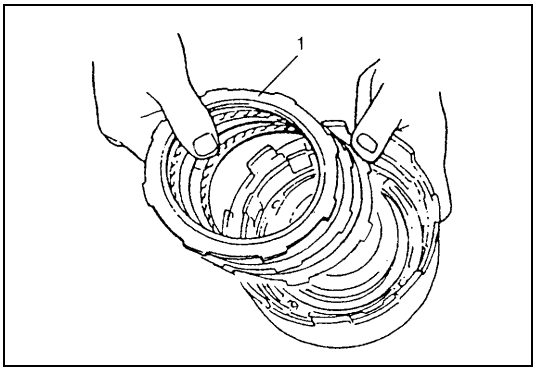

1) Remove snap ring.
2) Remove flange (1), discs and plates.

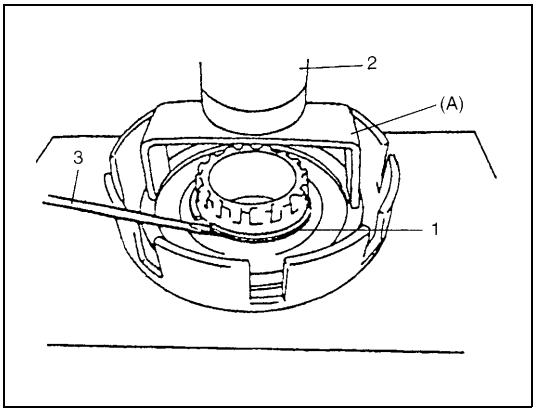

3) Remove shaft snap ring (1).
   Compress piston return springs and remove shaft snap ring. Place special tool (clutch spring compressor) on spring seat and compress spring with a press (2), and then remove shaft snap ring, using a flat end rod or the like (3).

CAUTION:
Do not push down return spring more than necessary.

Special tool
(A) : 09926-96010

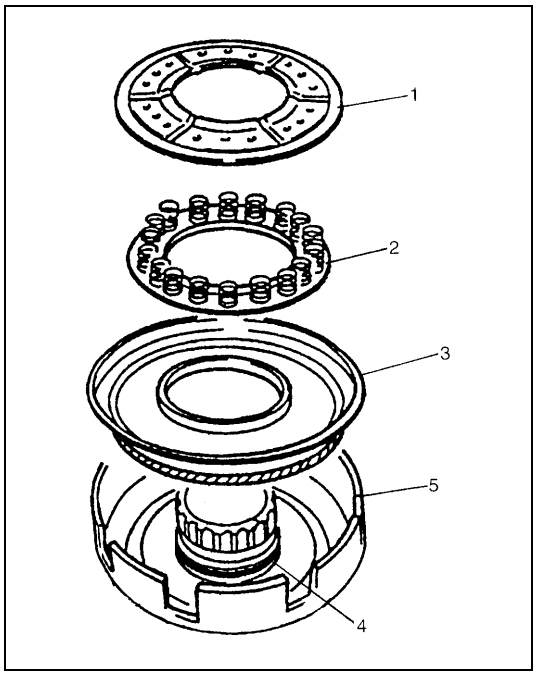

4) Remove direct clutch balancer (1) and direct clutch return spring seat (2).
5) Remove direct clutch piston (3).
   Blow compressed air through input shaft oil hole to remove piston. If piston does not pop out, take it out with long nose pliers.
6) Remove D-ring (4) from direct clutch No.1 drum (5).

INSPECTION

Clutch Discs, Plates and Flange

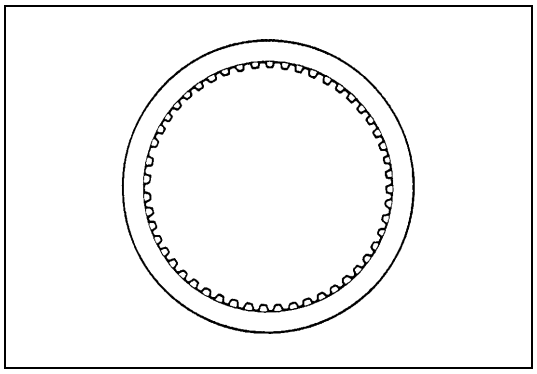

Check that sliding surfaces of discs, plates and flanges are not worn or burnt. If necessary, replace.

NOTE:

- **If disc lining is exfoliated or discolored, replace all discs.**
- **Before assembling new discs, soak them in A/T fluid for at least two hours.**

Direct Clutch Return Spring Seat

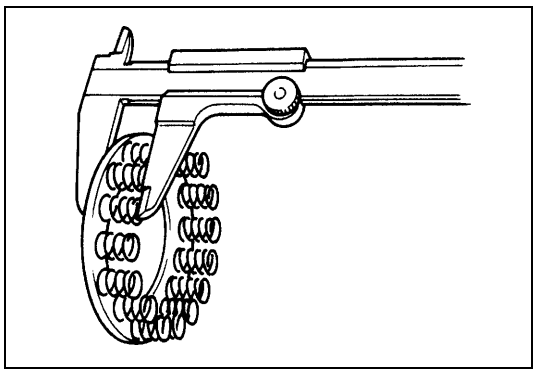

Measure height of direct clutch return spring.

Height of direct clutch return spring
: 16.3 mm (0.642 in.)

NOTE:

- **Do not apply excessive force when measuring spring height.**
- **Perform measurement at several points.**

Direct Clutch Piston Lip and Direct Clutch Balancer Lip

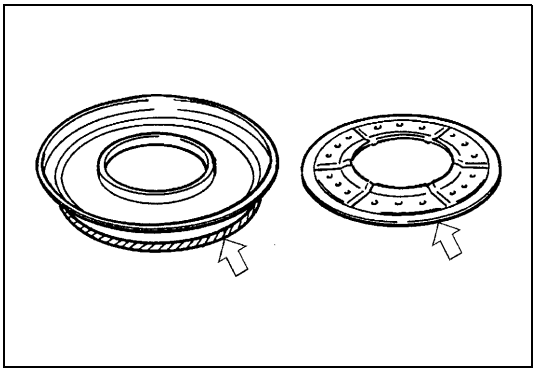

Check each lip for wear, deformation, cut, and/or hardening. If necessary, replace.

ASSEMBLY

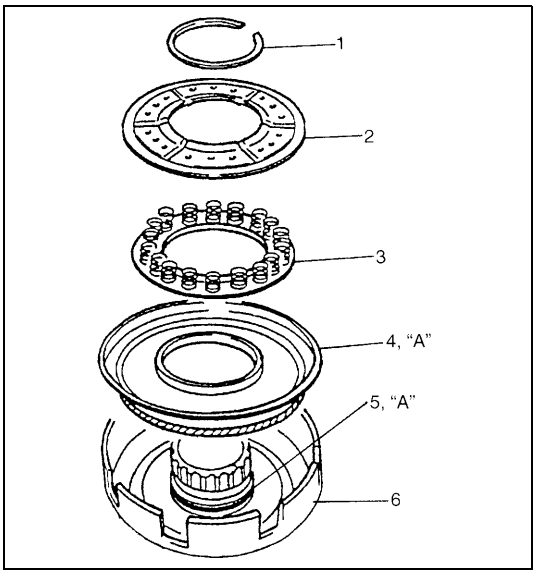

1) Install new D-ring (5) to direct clutch No.1 drum (6).
   Apply grease to D-ring and fit it to drum.

   "A": Grease 99000-25030

2) Install piston (4) into direct clutch No.1 drum.
   Use care that the piston lip does not get twisted or caught.
   Apply grease to the lip of the piston.

   "A": Grease 99000-25030

3) Install direct clutch return spring seat (3) and direct clutch balancer (2).

1. Snap ring

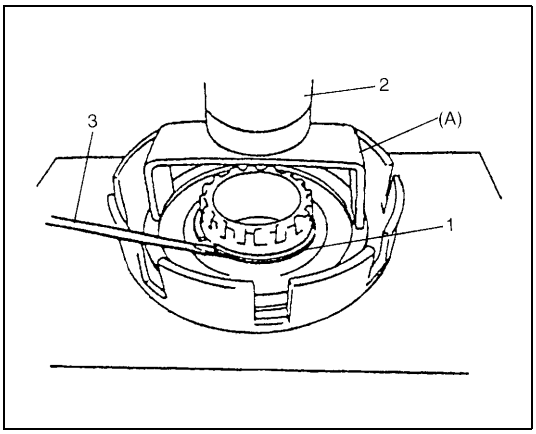

4) Install new shaft snap ring (1).
   Compress return springs and install shaft snap ring in groove by using a flat end rod or the like (3).
   Place special tool (clutch spring compressor) on spring seat and compress springs with a press (2).

CAUTION:
Do not compress return spring more than necessary.

Special tool
(A) : 09926-96010

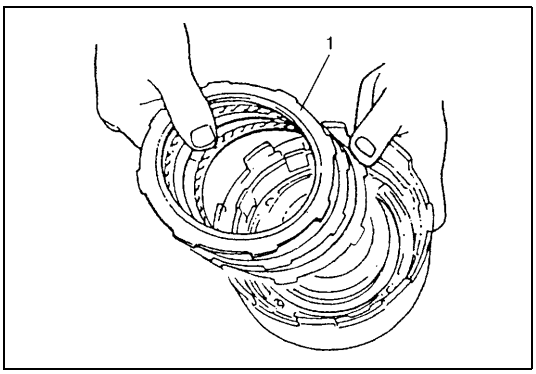

5) Install discs, plates and flange (1) in following order.
   (1) Flange No.1 → (2) Disc → (3) Plate → (4) Disc → (5) Flange No.2

NOTE:

Before assembly, new discs should be soaked in automatic transmission fluid for at least 2 hours.

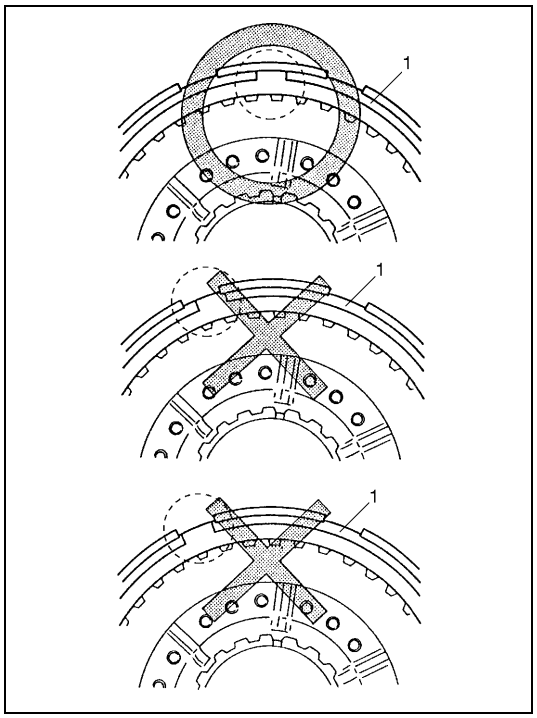

6) Install snap ring (1).

NOTE:

Make sure that the ends of the snap ring do not come to the opening of the front clutch No.1 drum.

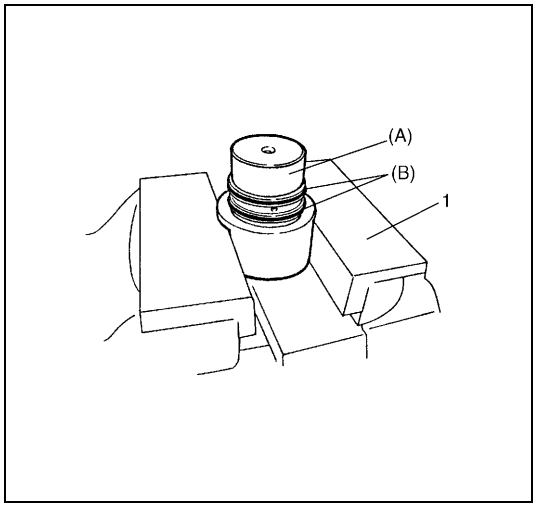

7) Place special tool (A) on soft jawed vise (1) and install 2 oil seal rings on special tool.

Special tool
(A) : 09926-26050
(B) : Rear cover seal ring 24742-78F10 SUZUKI GENUINE PARTS

NOTE:

- **Rear cover seal set has two seal rings in a set.**
- **Do not use the seal rings removed from rear cover. It is not necessary to remove seal rings from special tool once installed.**

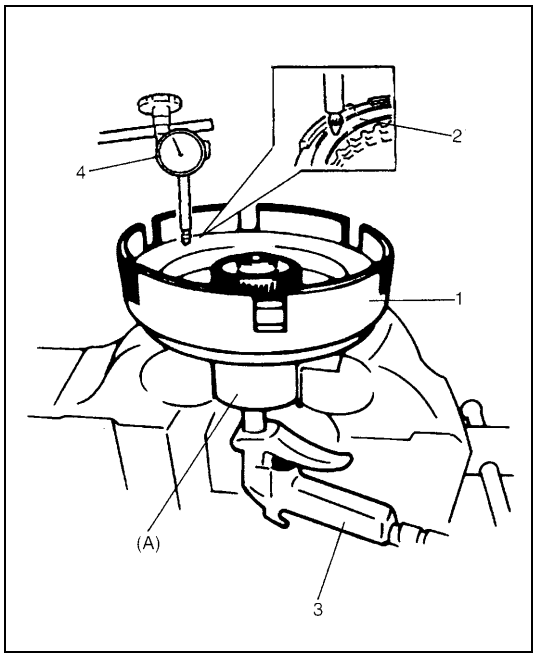

8) Place direct clutch assembly (1) on special tool (A).
9) Set dial gauge (4) on the top of clutch flange (2) and measure clearance by blowing compressed air (4 kg/cm^2, 57 psi) as shown in figure.
If the clearance is out of specification, replace clutch discs, plates and flange.

Direct clutch disc clearance
: 0.50 – 1.04 mm (0.0197 – 0.0409 in.)

3. Air gun

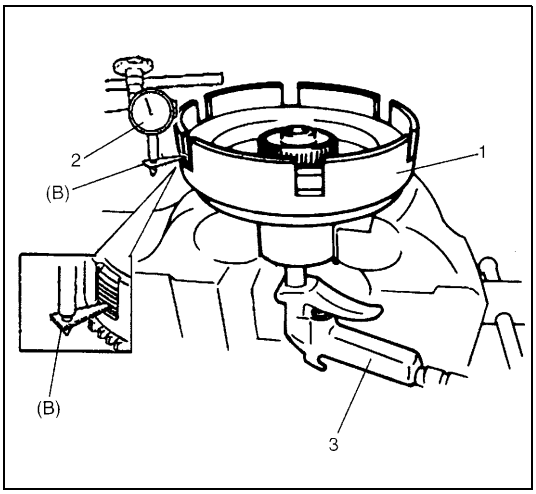

10) Attach special tool (B) to dial gauge (2) and set them on the lowest clutch plate.

Special tool
(B) : 09952-06010

11) Measure piston stroke by blowing compressed air (4 kg/cm^2, 57 psi) as shown in figure.

Direct clutch piston stroke
: 0.96 – 1.14 mm (0.0378 – 0.0449 in.)

1.	Direct clutch assembly
3.	Air gun

PLANETARY SET

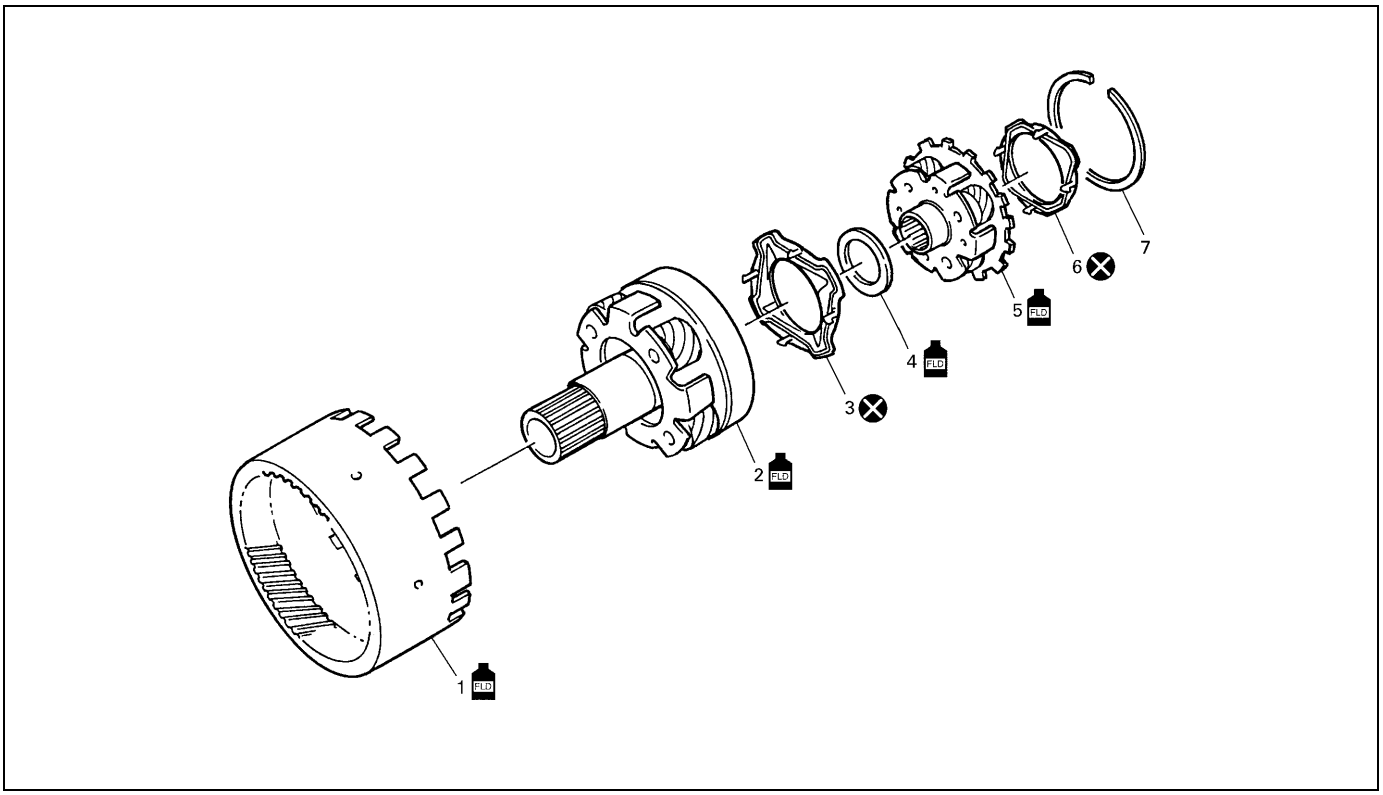

1. Planetary ring gear No.2	4. Thrust needle roller bearing	7. Snap ring
2. Planetary gear assembly No.2	5. Planetary gear assembly No.1	FLD Apply automatic transmission fluid.
3. Planetary oil receiver No.2	6. Planetary oil receiver No.1	⊗ Do not reuse.

DISASSEMBLY

1) Remove snap ring.
   Remove planetary ring gear No.2.

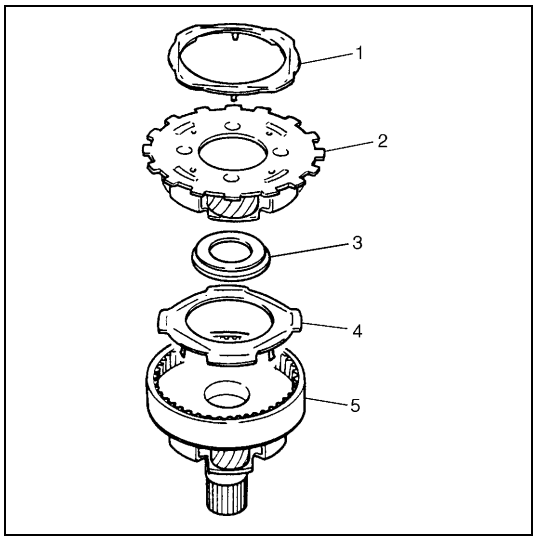

2) Remove planetary oil receiver No.1 (1) and planetary gear assembly No.1 (2) from planetary gear assembly No.2 (5).
3) Remove needle roller bearing (3) and planetary oil receiver No.2 (4) from planetary gear assembly No.2.

NOTE:

Do not reuse oil receivers (1 and 4).

ASSEMBLY

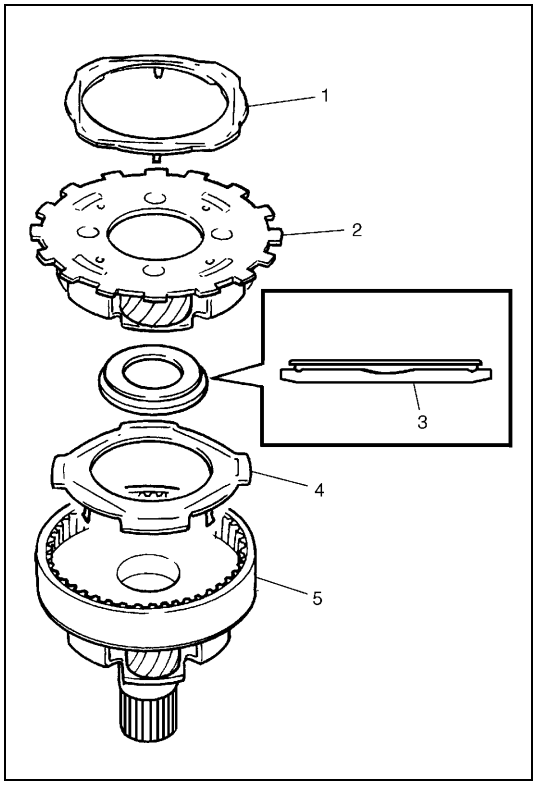

1) Install new planetary oil receiver No.2 (4) and needle roller bearing (3) to planetary gear assembly No.2 (5).

NOTE:

- **Note the direction of needle roller bearing.**
- **Take care not to break the claw of oil receiver.**

2) Install planetary gear assembly No.1 (2) to planetary gear assembly No.2 (5).
3) Install new planetary oil receiver No.1 (1).

NOTE:

Take care not to break the claw of oil receiver.

4) Assemble planetary ring gear No.2 and planetary gear assembly No.2.

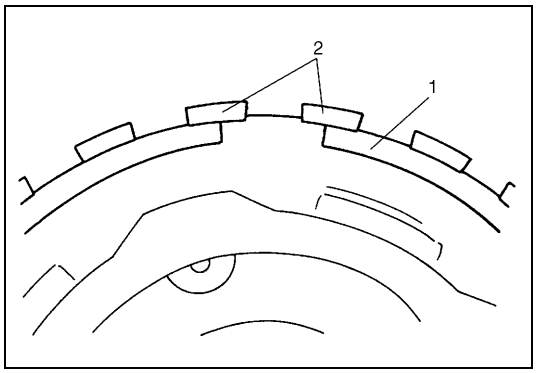

5) Install snap ring (1).

NOTE:

Note the location of the ends of the snap ring.

2. Planetary ring gear No.2

VALVE BODY

1. Upper valve body	12. Lock-up control valve	23. Fail valve No.1
2. Upper valve body gasket	13. Lock-up control valve spring	24. Fail valve No.1 sleeve
3. Valve body plate	14. Lock-up signal valve plug	25. Key (short)
4. Lower valve body gasket	15. Lock-up signal valve	26. Key (long)
5. Lower valve body	16. Lock-up signal valve spring	27. Oil strainer
6. Primary regulator valve sleeve	17. Fail valve No.2 sleeve	28. Cooler by-pass valve
7. Primary regulator valve plunger	18. Fail valve No.2	29. Cooler by-pass valve spring
8. Primary regulator valve spring	19. Secondary regulator valve plug	30. Steel ball
9. Washer	20. Secondary regulator valve spring	31. Lock-up control valve
10. Primary regulator valve	21. Secondary regulator valve	FLD Apply automatic transmission fluid.
11. Lock-up control valve sleeve	22. Manual valve	Do not reuse.

DISASSEMBLY

Valve Body Assembly

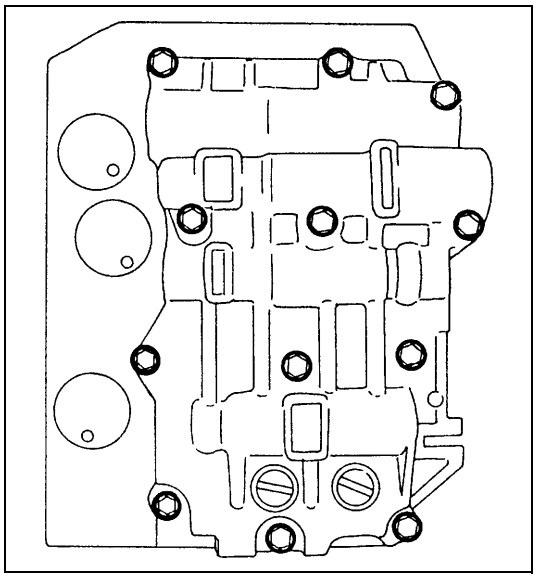

1) Remove manual valve.
2) Remove 12 bolts from lower valve body.

NOTE:

- **There are 4 different kinds of bolt fixing upper and lower valve body. Do not mix them up and remember where they belong to.**
- **When separating lower and upper valve body, be careful not to let the steel ball to fall off.**

Upper Valve Body

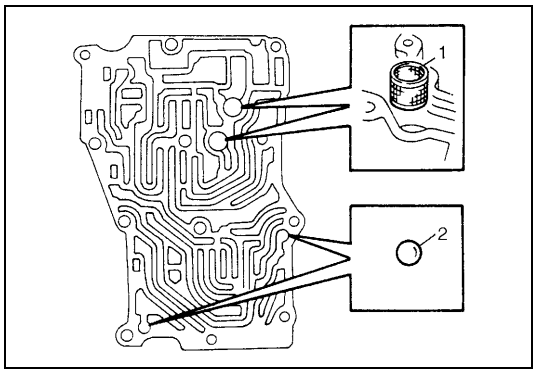

1) Remove oil strainers (1) and steel balls (2).

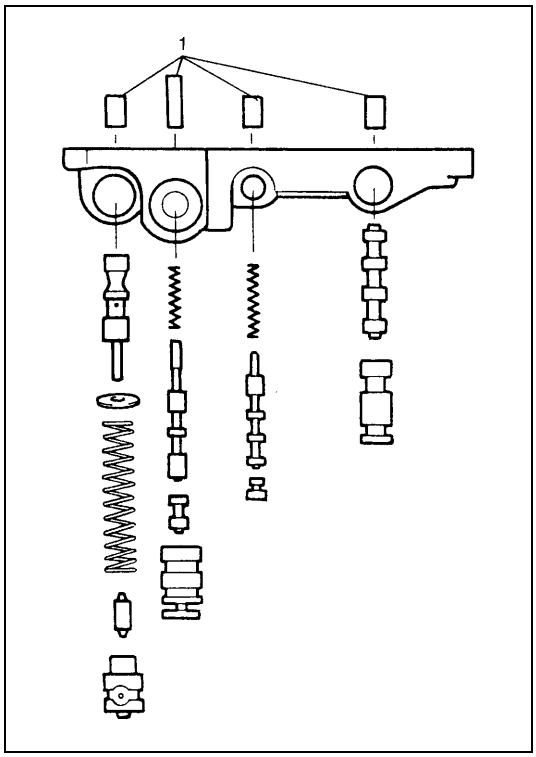

2) Remove keys (1).
3) Pull out all sleeves, valves, plungers, springs and washer.

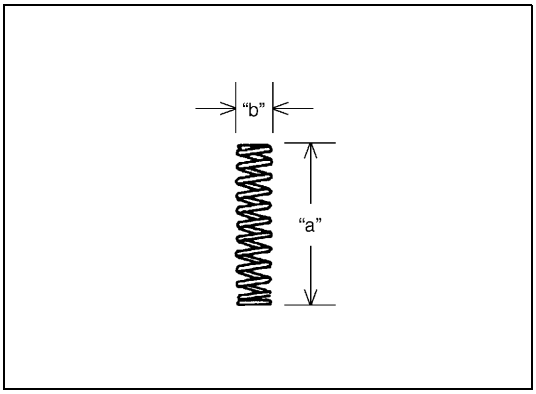

Valve spring dimensions (Reference)

Spring	Free length "a" (mm)	Outside diameter "b" (mm)
Primary regulator valve spring	79.2	18.0
Lock-up control valve spring	31.1	8.5
Lock-up signal valve spring	36.1	8.5

Lower Valve Body

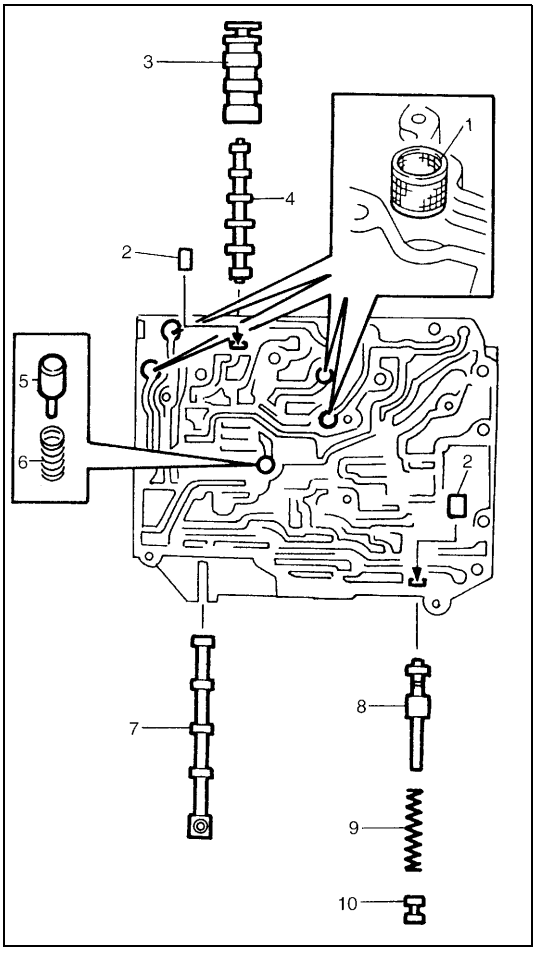

1) Remove oil strainers (1).
2) Remove solenoid valves, if still attached.
3) Remove keys (2) and pull out all sleeve, plug, spring and valves.

3.	Fail valve No.1 sleeve
4.	Fail valve No.1
5.	Cooler by-pass valve
6.	Cooler by-pass valve spring
7.	Manual valve
8.	Secondary regulator valve
9.	Secondary regulator valve spring
10.	Secondary regulator valve plug

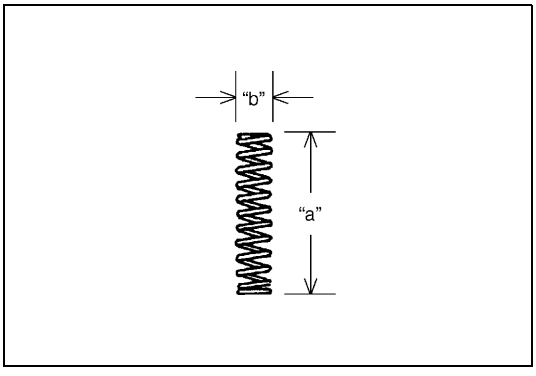

Valve spring dimensions (Reference)

Spring	Free length "a" (mm)	Outside diameter "b" (mm)
Secondary regulator valve spring	38.7	8.8
Cooler by-pass valve spring	22.8	8.0

ASSEMBLY

Upper Valve Body

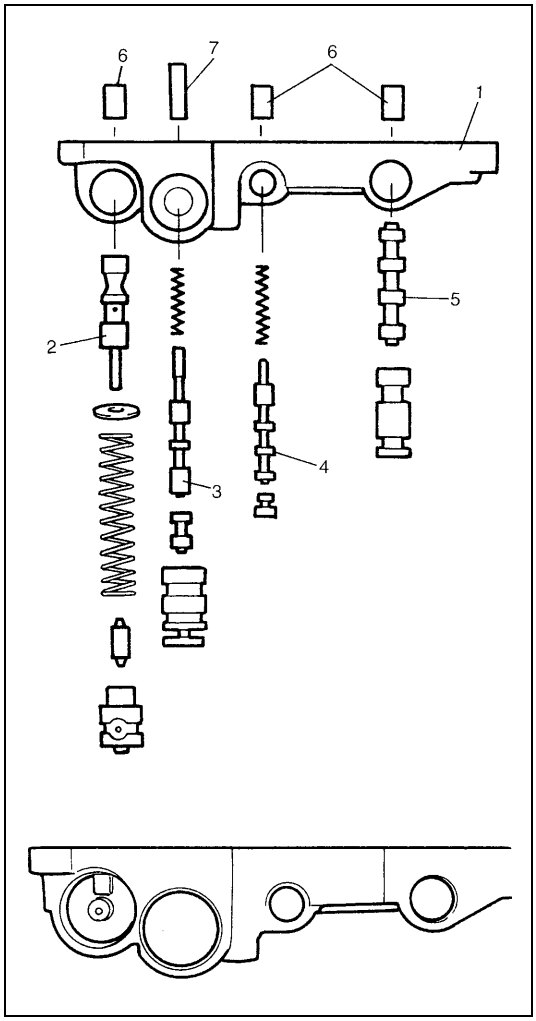

1) Apply A/T fluid to each valve, plate washer, spring, plunger, sleeve and key.
   Insert primary regulator valve (2) about half way then place plate washer and spring. Push in primary regulator valve assembly all the way in. Insert plunger with sleeve and hold them with the key.

NOTE:

- **Note the location of the key shown in picture.**
- **Compression spring has a identification color paint of yellow.**
- **Note the direction of the primary regulator valve.**

2) Apply A/T fluid to each valve, sleeve, spring, plug and key and insert them, then fix them with the key.

NOTE:

Note the direction of the fail valve.

1.	Upper valve body
3.	Lock-up control valve
4.	Lock-up signal valve
5.	Fail valve No.2
6.	Key (short)
7.	Key (long)

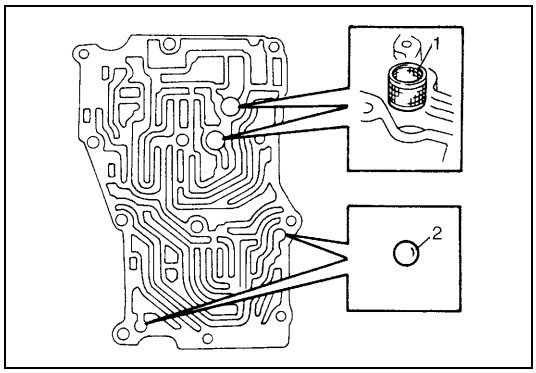

3) Install oil strainers (1) and put steel balls (2).

NOTE:

Clean oil strainer before installing.

Lower Valve Body

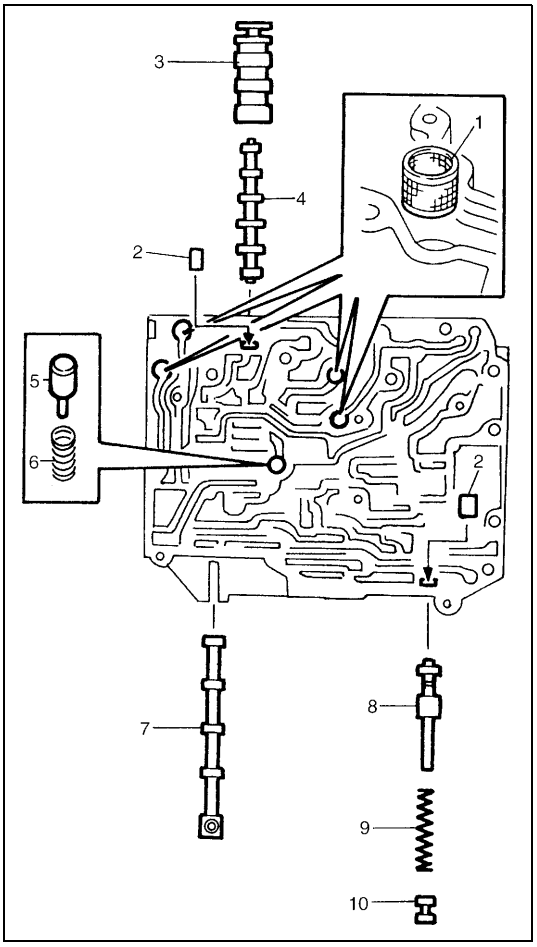

1) Apply A/T fluid to each valve, spring, sleeve and key. Insert them, then fix with key.

NOTE:

Make sure that the fail valve No.2 and secondary regulator valve is inserted in the right direction.

2) Insert oil strainers to lower valve body.

NOTE:

Clean oil strainer before installing.

1.	Oil strainer
2.	Key (short)
3.	Fail valve No.1 sleeve
4.	Fail valve No.1
5.	Cooler by-pass valve
6.	Cooler by-pass valve spring
7.	Manual valve
8.	Secondary regulator valve
9.	Secondary regulator valve spring
10.	Secondary regulator valve plug

VALVE BODY ASSEMBLY

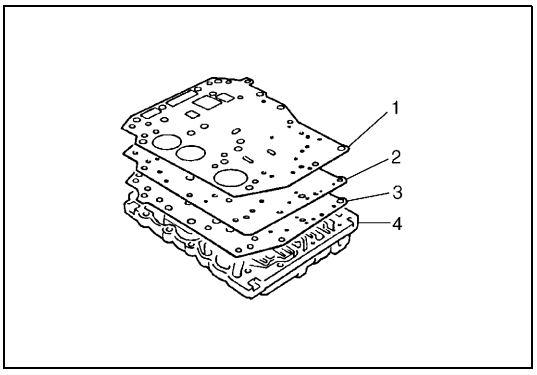

1) Install new gasket for lower valve body (3), valve body plate (2) and new gasket for upper valve body (1) to lower valve body (4).

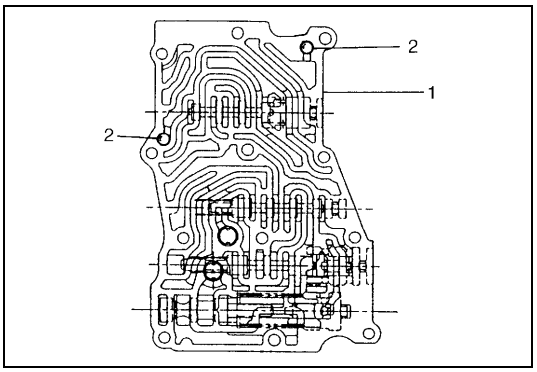

2) Make sure that steel balls (2) are at the location shown in figure.

1.	Upper valve body

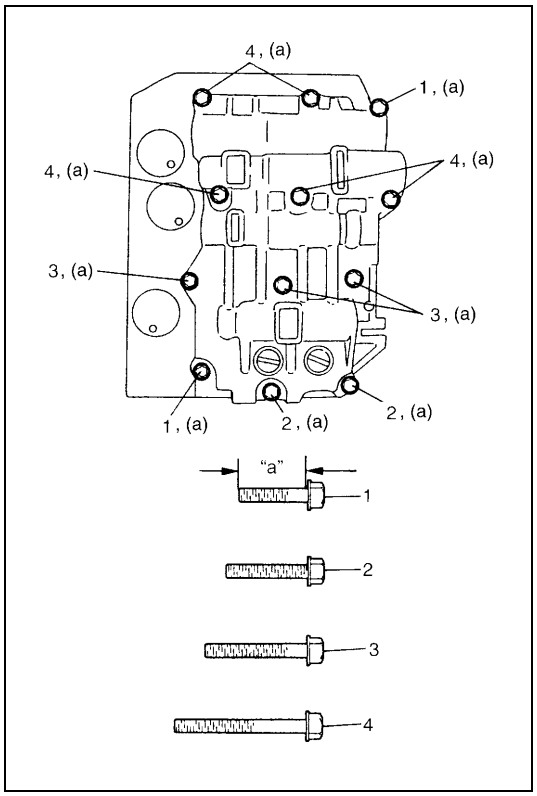

3) Assemble lower valve body with gaskets and plate over upper valve body.
First tighten bolts A then the other bolts.

Tightening torque
Valve body bolts (a) : 5.5 N·m (0.55 kg-m, 4.0 lb-ft)

NOTE:

- **Be careful not to fall steel balls off.**
- **There are four kinds of bolts fixing upper and lower valve body. Refer to the table below for the bolt specifications.**

Bolt	Length "a"	Pieces
A	20 mm (0.79 in.)	2
B	23 mm (0.91 in.)	2
C	29.5 mm (1.16 in.)	3
D	42 mm (1.65 in.)	5

1. Bolt A	3. Bolt C
2. Bolt B	4. Bolt D

4) Install manual valve to valve body assembly.

DIFFERENTIAL ASSEMBLY

Servicing procedure for differential assembly is similar to that for manual transmission. Refer to Section 7A of this manual for adjustment procedure.

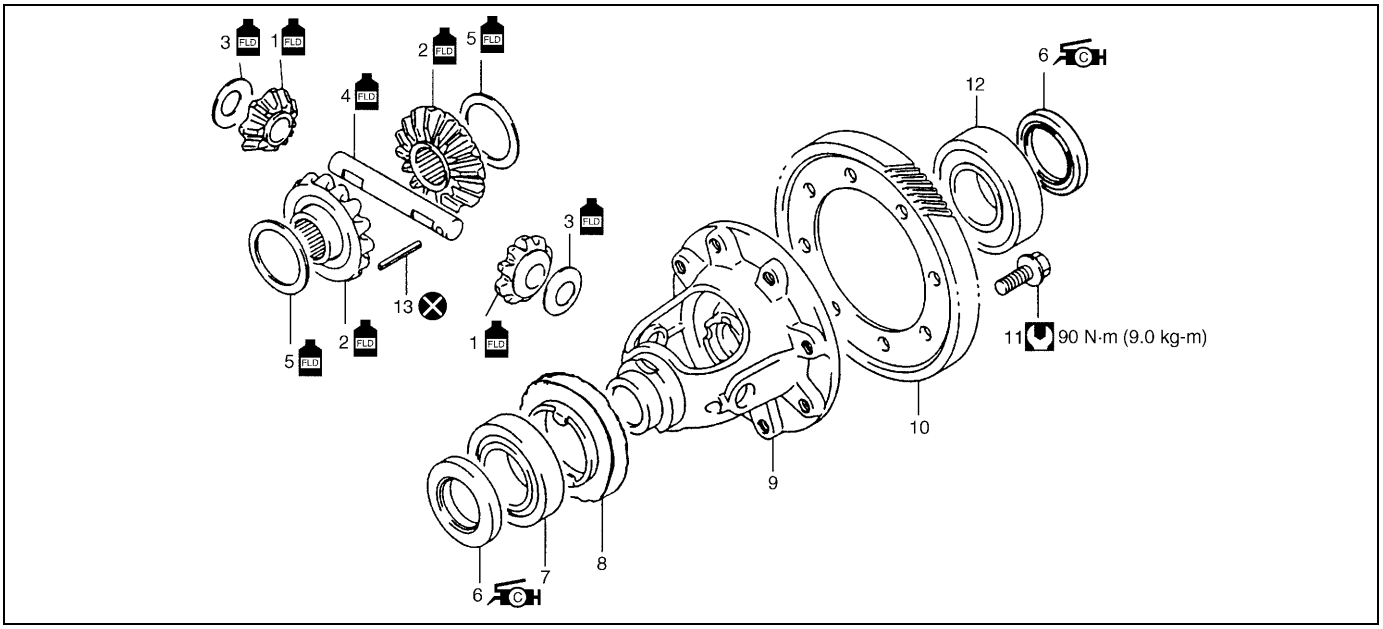

1. Differential pinion	7. Differential right side bearing (R bearing)	13. Pinion shaft pin	
2. Differential gear	8. Speedometer sensor rotor	FLD	Apply automatic transmission fluid.
3. Washer (for pinion)	9. Differential case		Tightening torque
4. Pinion shaft	10. Final gear		Do not reuse.
5. Washer (for gear)	11. Bolt		
C H 6. Differential side oil seal : Apply grease 99000-25030 to oil seal lip.	12. Differential left side bearing (L bearing)		

DISASSEMBLY

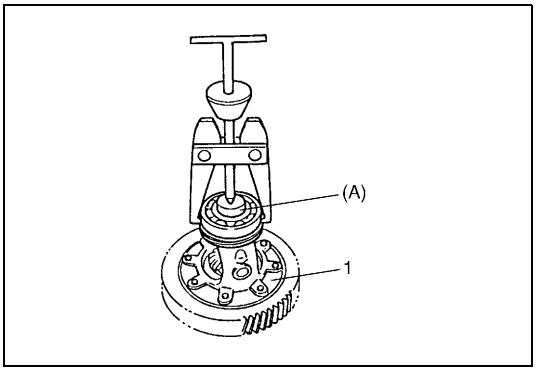

1) Remove R bearing and then speed sensor rotor using special tool and puller.

Special tool
(A) : 09925-88210

1. Differential gear assembly

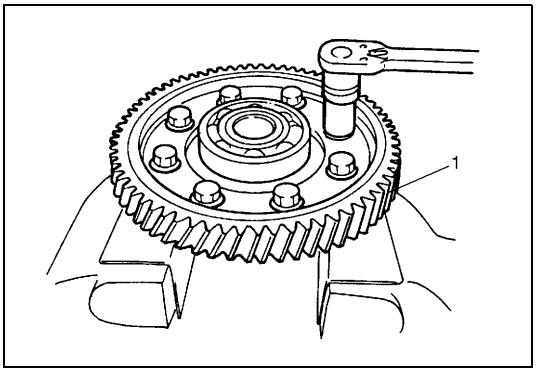

2) Hold differential assembly with soft jawed vise, remove final gear (1).

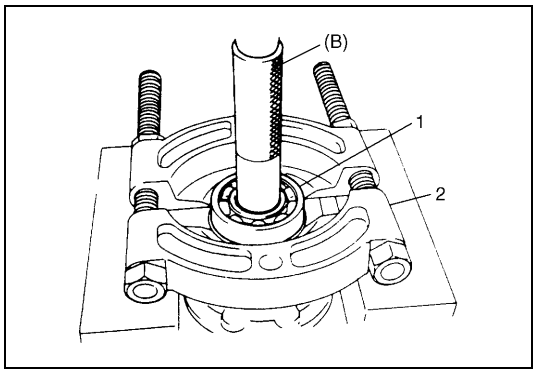

3) Remove differential side L bearing (1).
   Drive it out by using special tool, bearing puller (2) and press.

Special tool
(B) : 09913-80112

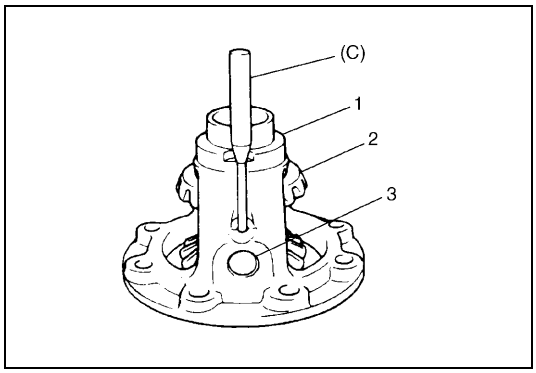

4) Remove pinion shaft pin.
   Use special tool and hammer for its removal.

Special tool
(C) : 09922-85811

5) Remove pinion shaft (3), differential pinions with each washer, differential gears (2) with each washer.

1. Differential case

ADJUSTMENT AND REASSEMBLY

Prepare replacing parts as required and proceed to reassembly. Make sure that all parts are clean.

1) Install differential gears.
2) Measure and adjust thrust play referring to Section 7A.
   If thrust play is out of specification, select suitable thrust washer from among following available size, install it and check again that specified gear play is obtained.

Available thrust washer thickness
: 0.9, 0.95, 1.0, 1.05, 1.1, 1.15 and 1.2 mm (0.035, 0.037, 0.039, 0.041, 0.043, 0.045, and 0.047 in.)

3) Then assemble them with suitable thrust washers.

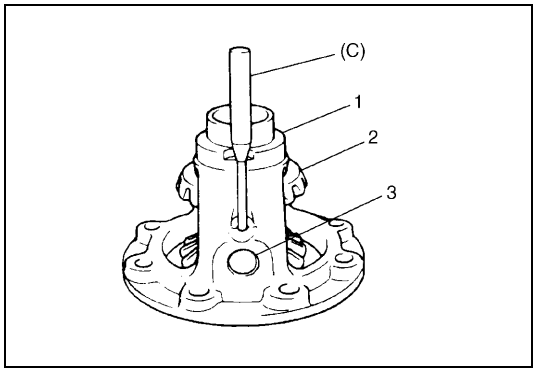

4) Drive in new pinion shaft pin from right side till it is flush with differential case surface.

Special tool
(C) : 09922-85811

1. Differential case
2. Differential gear
3. Differential pinion shaft

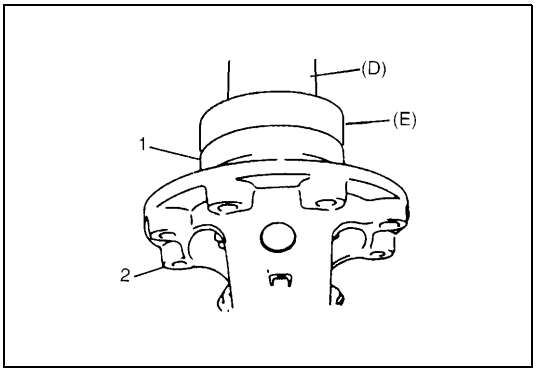

5) Install differential side L bearing (1). Press-fit it by using special tool and copper hammer.

Special tool
(D) : 09924-74510
(E) : 09926-68310

2. Differential case

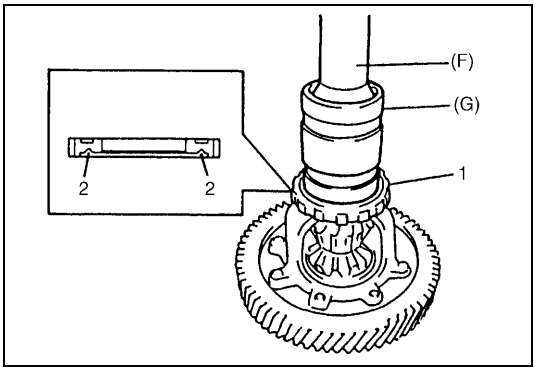

6) Press-fit new sensor rotor (1) with groove (2) side downward as shown by using special tools and copper hammer.

Special tool
(F) : 09951-76010
(G) : 09940-54910

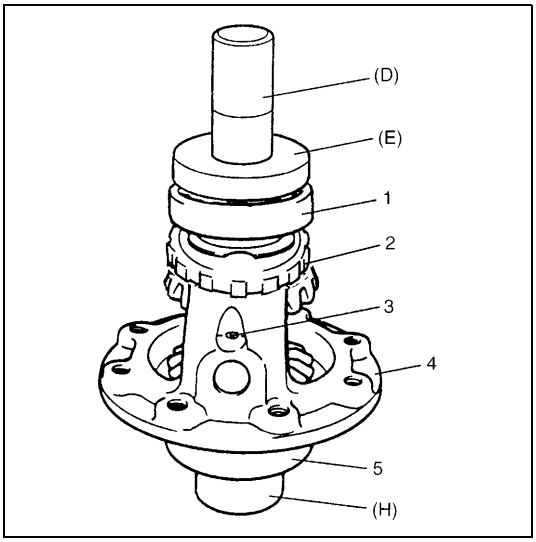

7) Support differential assembly as illustrated so as to float L bearing, and then press-fit R bearing by using special tool and copper hammer.

Special tool
(D) : 09924-74510
(E) : 09926-68310
(H) : 09951-16060

1. Differential side R bearing	4. Differential case
2. Speedometer sensor rotor	5. Differential side L bearing
3. Differential pinion shaft pin	

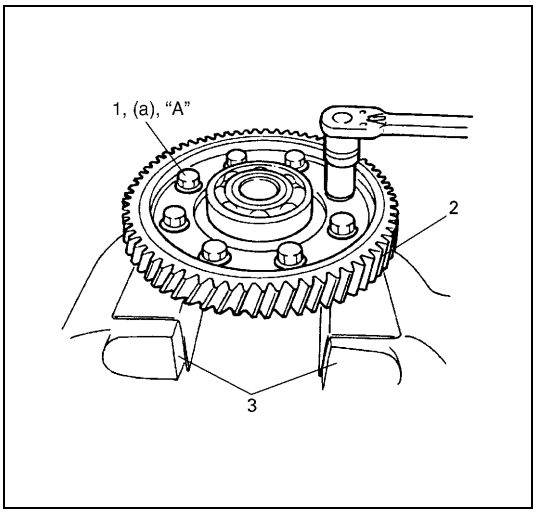

8) Hold differential assembly with soft jawed vise (3), install final gear (2) and then tighten it with 8 bolts to which thread lock cement is applied to specified torque.

CAUTION:
Use of bolts other than specified ones is prohibited.

Tightening torque
(a) : 90 N·m (9.0 kg-m, 65.0 lb-ft)

"A" : Thread lock cement 99000-32110

1. Final gear bolt

REAR COVER (O/D BRAKE PISTON ASSEMBLY)

DISASSEMBLY

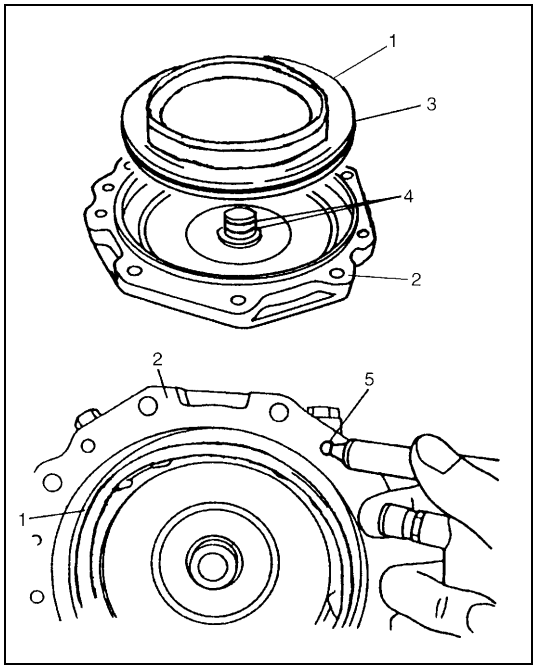

1) Remove O/D brake piston (1) from rear cover (2).

NOTE:

If O/D brake piston is hard to take it out, force low-pressure compressed air (1 kg/cm^2, 15 psi, 100 kPa max) into hole (5) shown in figure and pop out piston into a rag.

2) Remove O-ring (3) and seal ring (4).
   Replace them, if damaged.

ASSEMBLY

1) Install seal rings to rear cover and O-rings to O/D brake piston.
2) Apply grease to O-rings and install O/D brake piston to rear cover.

PLANETARY SUN GEAR NO.1 ASSEMBLY

DISASSEMBLY

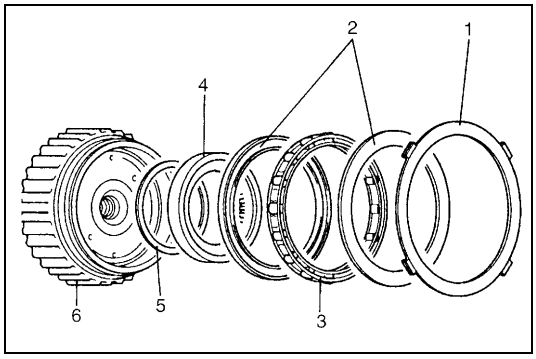

1) Remove one-way clutch retainer (1) from planetary sun gear No.1 assembly.

NOTE:

Do not reuse retainer.

2) Remove one-way clutch bearings (2), one-way clutch (3), inner race (4) and washer (5) from planetary sun gear No.1 (6).

ASSEMBLY

Reverse removal procedure noting followings.

- When installing retainer, fit 2 hooks of retainer on planetary sun gear No.1 and tap the other 2 hooks with plastic hammer.

After assembling, make sure that :

- There is no clearance between retainer and bearing.

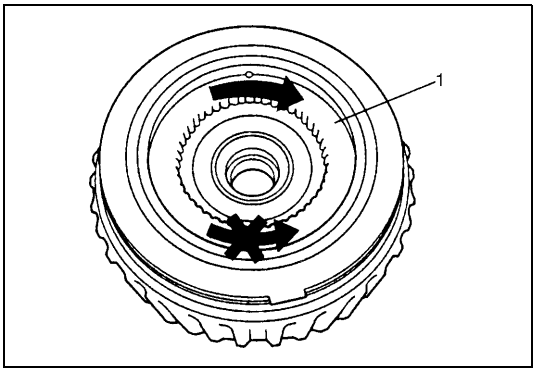

- Inner race (1) can rotate only one direction shown in figure.

- Fit 2 protrusions of washer to holes of planetary sun gear No.1.

TORQUE CONVERTER HOUSING

DISASSEMBLY

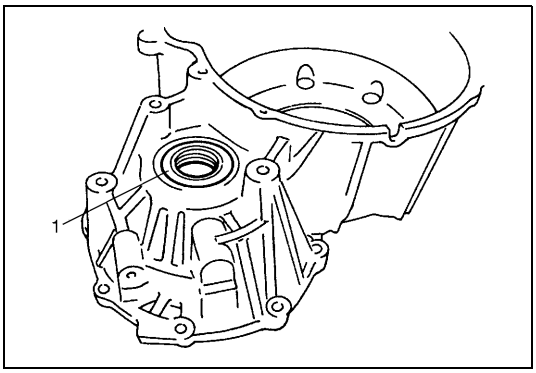

1) Remove oil seal (1).

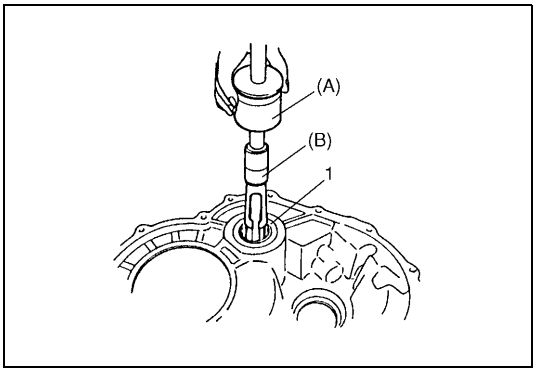

2) Remove counter bearing (1) using special tools.

Special tool
(A) : 09930-30102
(B) : 09923-74510

ASSEMBLY

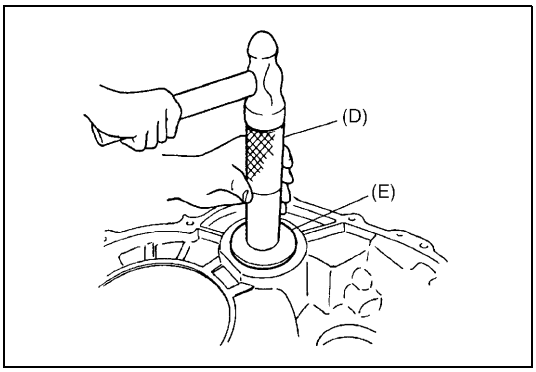

1) Install counter bearing to torque converter housing.
Use special tools and a hammer to press fit the bearing to torque converter housing.

Special tool
(D) : 09924-74510
(E) : 09944-68510

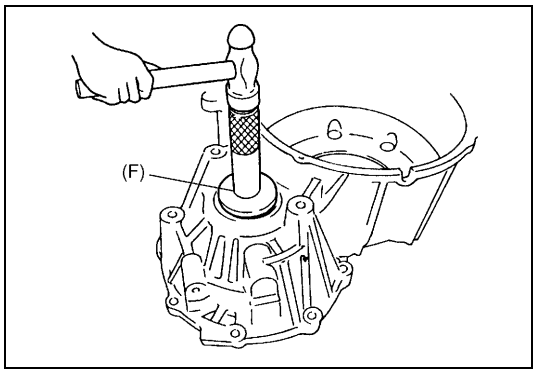

2) Install new oil seal to torque converter housing.
Use special tool to press-fit oil seal until the oil seal end face is flush with torque converter housing end face.

Special tool
(F) : 09940-53111

TRANSMISSION CASE

DISASSEMBLY

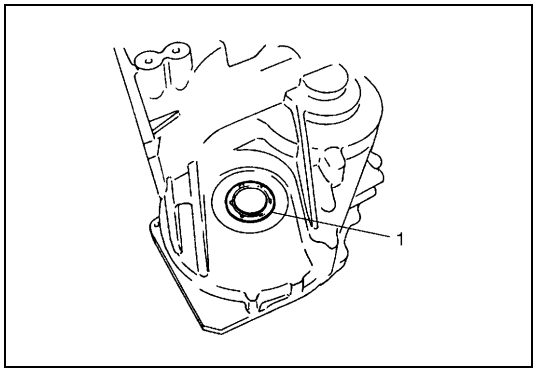

1) Remove oil seal (1).

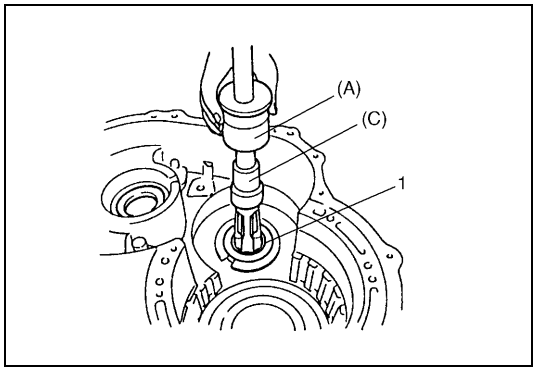

2) Remove counter bearing (1) using special tools.

Special tool
(A) : 09930-30102
(C) : 09941-64511

ASSEMBLY

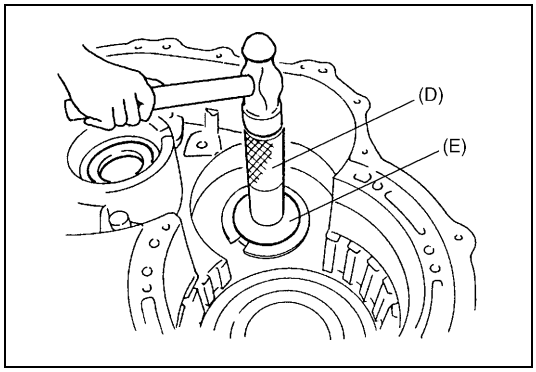

1) Install counter bearing using special tools.

Special tool
(D) : 09924-74510
(E) : 09944-68510

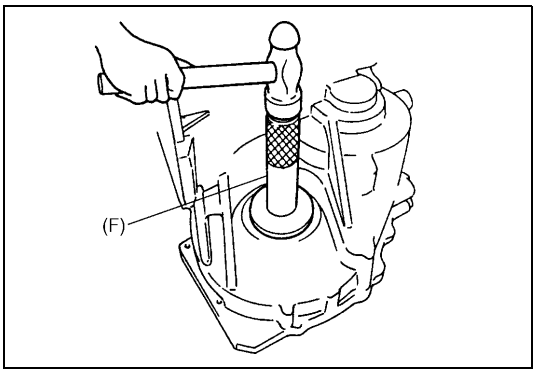

2) Install new oil seal to transmission case.
Use special tool to press-fit oil seal until oil seal end face is flush with transmission case end face.

Special tool
(F) : 09913-75510

UNIT ASSEMBLY

CAUTION:

- **Automatic transmission consists of highly precise parts. As even a flaw in a small part may cause oil leakage or decrease in function, check each part carefully before installation.**
- **Clean all parts with compressed air. Never use wiping cloths or rags.**
- **Before assembling new clutch discs and brake band, soak them in automatic transmission fluid for at least 2 hours.**
- **Be sure to use new gaskets and O-rings.**
- **Lubricate O-rings with automatic transmission fluid.**
- **Apply automatic transmission fluid on sliding or rotating surfaces of the parts before assembly.**
- **Use yellow petrolatum grease or Suzuki Super Grease C to retain parts in place.**
- **Be sure to install thrust bearings and races in correct direction and position.**
- **Make sure that snap ring ends are not aligned with one of cutouts and are installed in groove correctly.**
- **Do not use adhesive cements on gaskets and similar parts.**
- **Be sure to torque each bolt and nut to specification.**

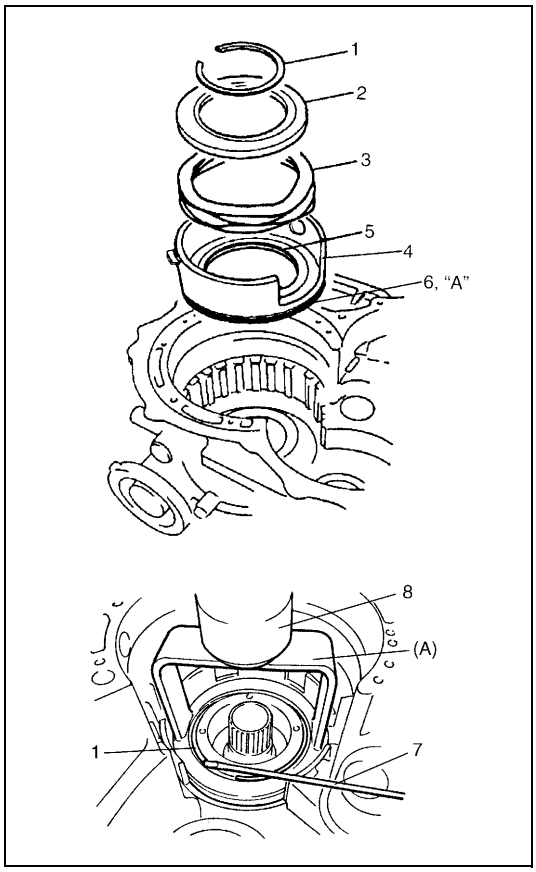

1) Install new O-rings (inside (5) and outside (6)) to reverse brake piston (4), and apply grease to them.

"A" : Grease 99000-25030

2) Install reverse brake piston (4), wave spring (3) and reverse brake piston seat (2) to transmission case.
3) Install new snap ring (1) by compressing wave spring thru reverse brake piston seat with hydraulic press (8) and special tool.

NOTE:

Don't compress wave spring more than necessary or it may get damaged.

Special tool
(A) : 09926-96040

7. Flat end rod or the like

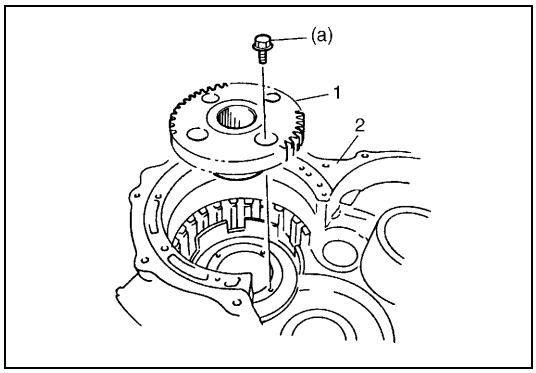

4) Install counter drive gear (1).

Tightening torque
Counter drive gear installing bolts
(a) : 5.5 N·m (0.55 kg-m, 4.0 lb-ft)

2. Transmission case

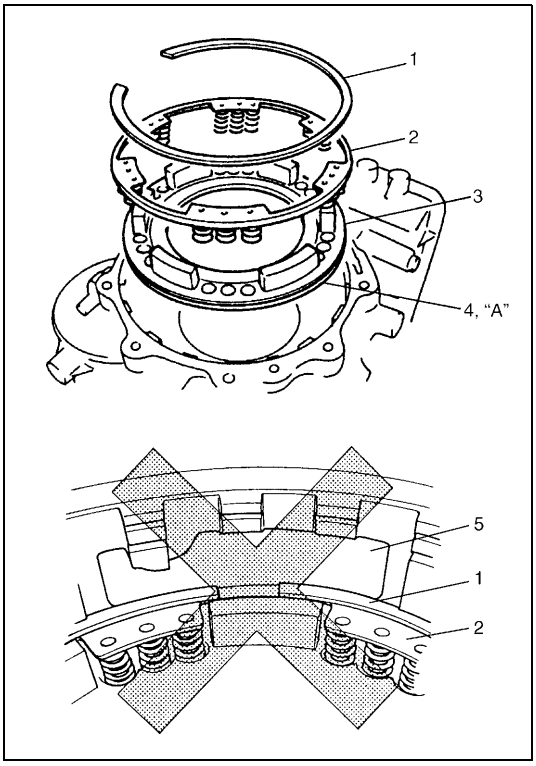

5) Install new inner and outer O-rings (4) to 1st & 2nd brake piston (3) and apply grease to them.

"A" : Grease 99000-25030

6) Install 1st & 2nd brake piston (3) to transmission case, in such way that the side with spring holes comes to the top. Make sure that the O-rings are not twisted or caught.
7) Place 1st & 2nd brake piston return spring subassembly (2) on piston (3). Make sure that each spring fits the holes on the piston.
8) Push down return spring subassembly and install snap ring (1).

CAUTION:
Check that the opening of snap ring does not face the cored-hole (5) of the transmission case.

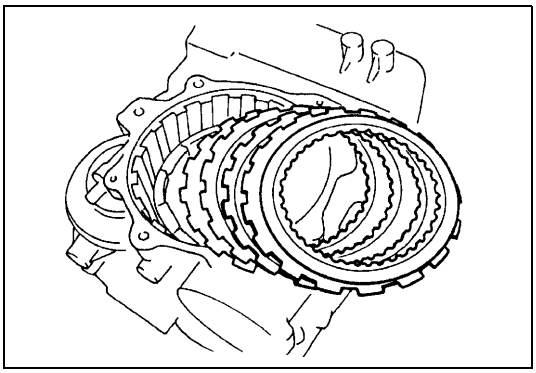

9) Install 1st & 2nd brake (B1) discs and plates in following order.
(1) Plate → (2) Disc → (3) Plate → (4) Disc → (5) Plate → (6) Disc → (7) Plate → (8) Disc
10) Hold above parts with snap ring.

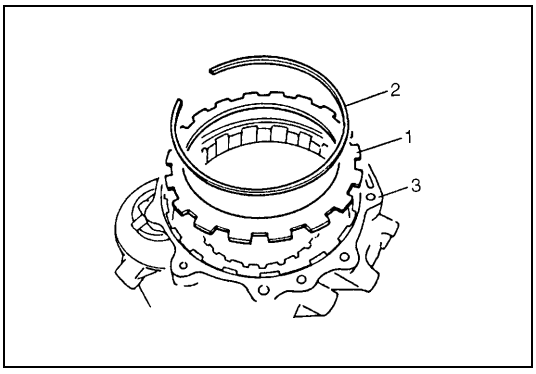

11) Install brake flange (1) and snap ring (2) to transmission case (3).

NOTE:
The flat surface of the flange comes to the top (must face O/D brake piston).

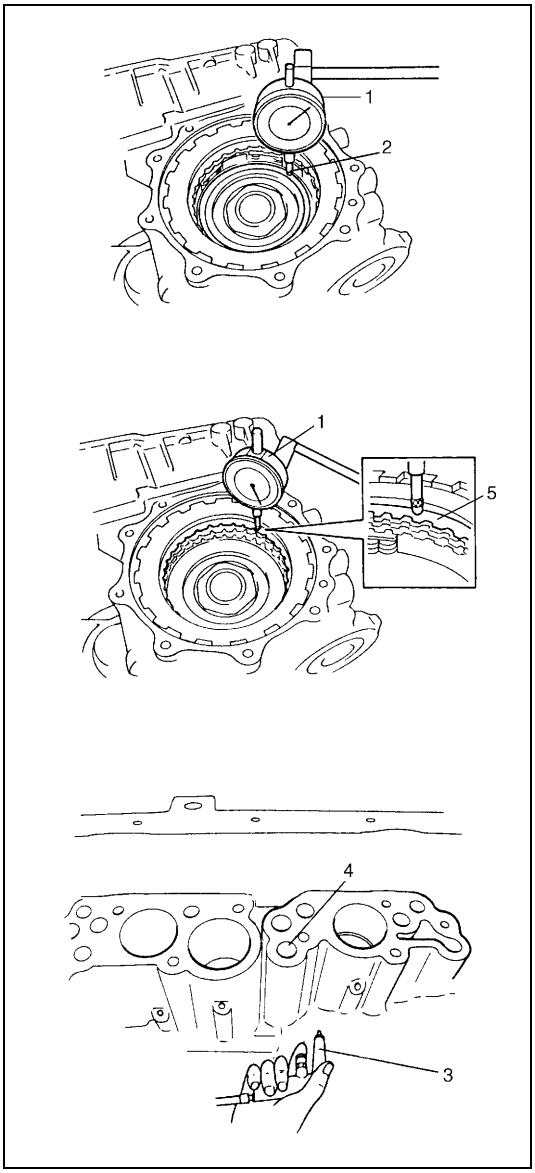

12) Measure 1st & 2nd brake (B1) stroke and clearance in following manner.
- Set the dial gauge (1) to 1st & 2nd brake (B1) piston as shown. Blow compressed air into hole (4) shown in figure. Then measure the difference as the compressed air is blown in.

1st & 2nd brake (B1) piston stroke
Standard : 1.79 – 2.01 mm (0.0705 – 0.0791 in.)

- Set the dial gauge (1) on the top-most brake disc (5). Blow compressed air into the hole (4) shown in figure. Measure the difference. Call this value (A). If the measured value (s) is (are) out of specification, replace brake discs, plates and flange.

1st & 2nd brake (B1) disc clearance
Standard : 1.31 – 1.96 mm (0.0516 – 0.0772 in.)

2. Tip of dial gauge on B1 brake piston
3. Air gun

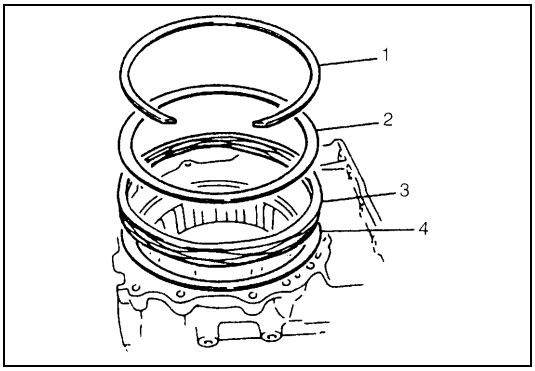

13) Install O/D brake (B0) return spring seat (4), return spring (3) and then retainer (2).
14) While compressing retainer (2), install snap ring (1).

CAUTION:
Position return spring (3) to be centered so that rear cover not be caught.

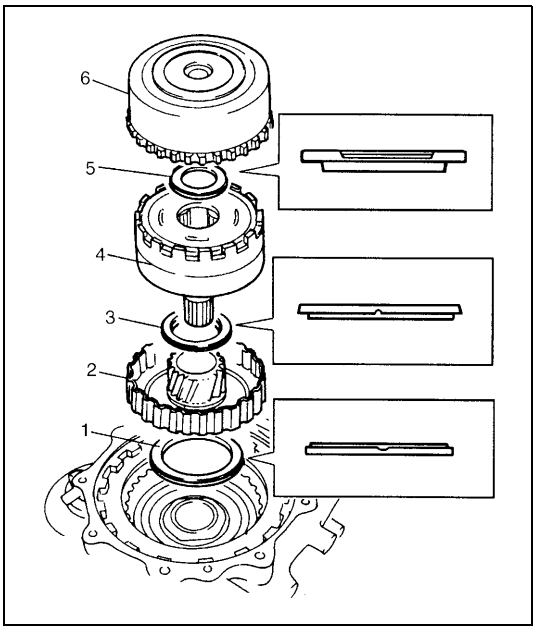

15) Install thrust needle roller bearing (1) and planetary sun gear No.2 (2). Turn planetary sun gear No.2 (2) right and left to match the brake discs and the spline of planetary sun gear No.2.
16) Install thrust needle roller bearing (3) and planetary set (4). Turn planetary set (4) right and left to match the gears of the planetary sun gear No.2 (2) and the gears of the planetary set (4).
17) Install thrust needle roller bearing (5) and planetary sun gear No.1 assembly (6). Turn planetary sun gear No.1 assembly (6) right and left to match the gears of planetary set (4) and the gears of planetary sun gear No.1 assembly (6).

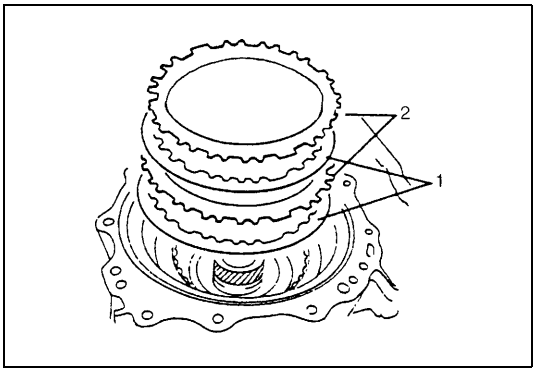

18) Install O/D brake (B0) discs (1) and plates (2).

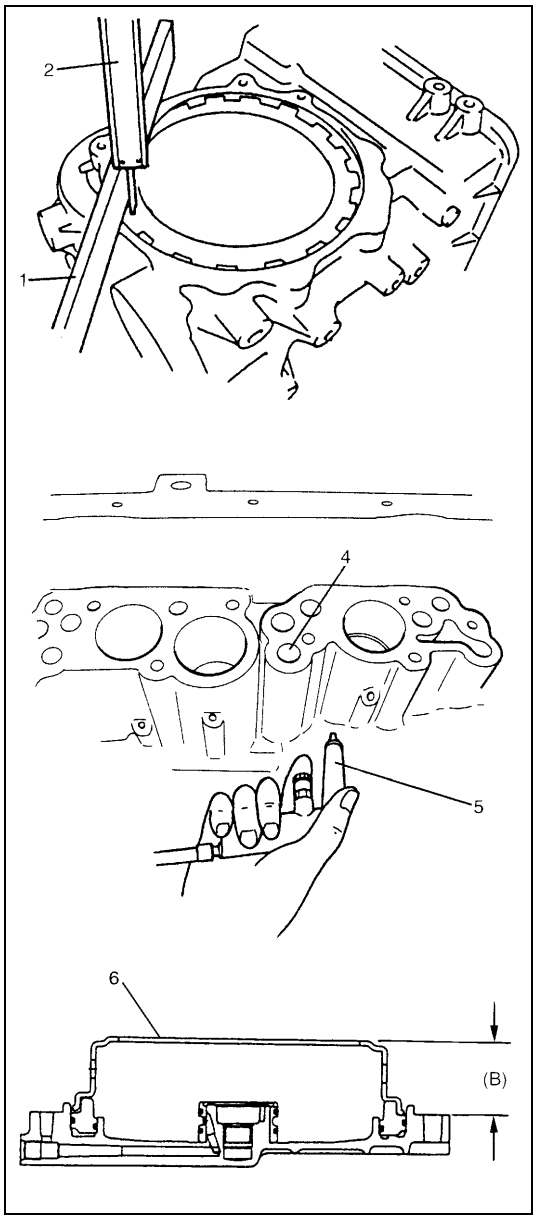

19) Measure the clearance of O/D brake (B0) in the following manner.
- Blow compressed air into hole (4) shown in figure to activate 1st & 2nd brake (B1) piston, then measure the distance between the top of O/D brake (B0) plate and the transmission case – rear cover mating surface.
  Call this value (A).
  ((A) = The value on vernier caliper – width of straight edge)
- Measure the distance from top of O/D brake (B0) piston (on rear cover) to rear cover – transmission case mating surface.
  Call this value (B).
- Clearance = (A) – (B) + 0.4

O/D brake (B0) clearance
Standard : 0.80 – 1.40 mm (0.0315 – 0.0551 in.)

20) If the obtained value is out of standard value, replace brake disc and plate.

1.	Straight edge
2.	Vernier caliper
3.	Rear cover assembly (with B0 piston)
5.	Air gun
6.	O/D brake piston adapter

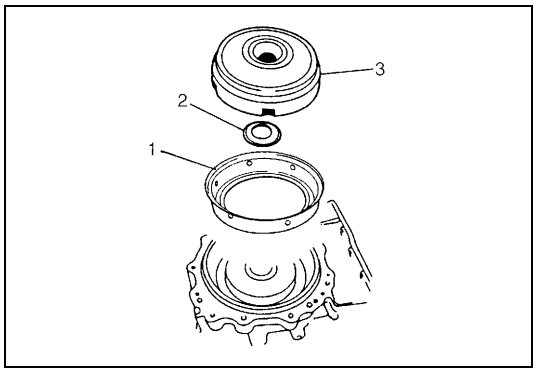

21) Install O/D brake piston adapter (1) thrust needle roller bearing (2) and direct clutch (C0) assembly (3).

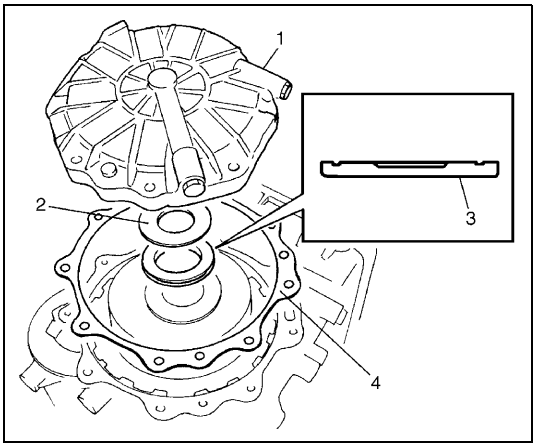

22) Install thrust needle roller bearing (3).
23) Install thrust washer (2).

1.	Rear cover
4.	Gasket(a)

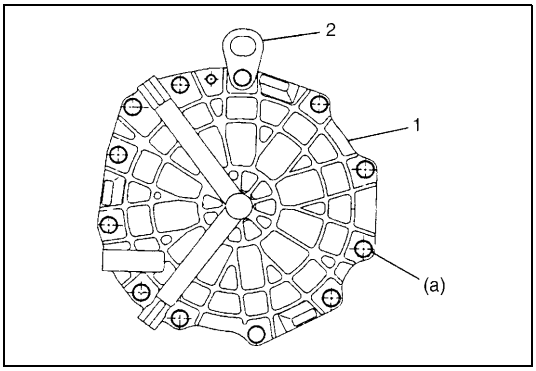

24) Install new gasket to transmission case and install rear cover (1).

Tightening torque
Rear cover bolts
(a) : 19 N·m (1.9 kg-m, 14.0 lb-ft)

NOTE:

Install the hook (2) to the location shown in figure.

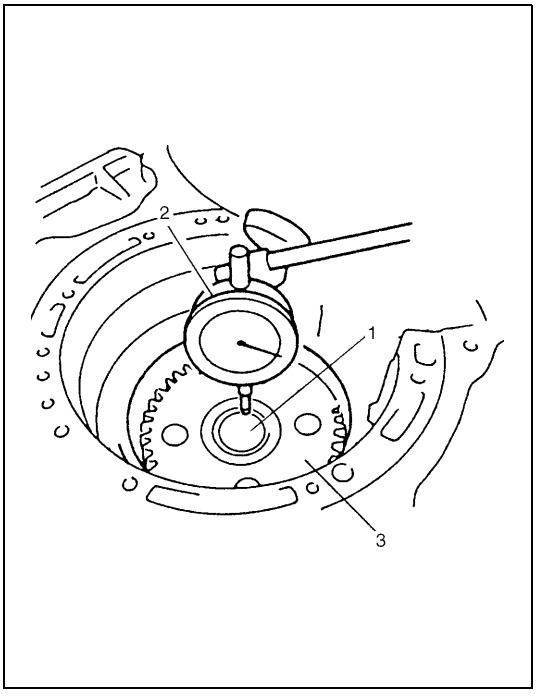

25) Measure clearance between thrust washer and rear cover in the following manner.
- Measure the shaft and play of planetary set (1) with dial gauge (2).
  If the obtained clearance is out of specification, select the thrust washer from table below and repeat above steps 22) – 24) to obtain the clearance within specification.

NOTE:

Make sure that tip of dial gauge is not in contact with counter drive gear (3).

Clearance between thrust washer and rear cover
Standard : 0.3 – 0.7 mm (0.012 – 0.028 in.)

Available thrust washer (thickness)
: 1.9 mm (0.075 in.), 2.2 mm (0.087 in.), 2.5 mm (0.098 in.) or 2.8 mm (0.110 in.)

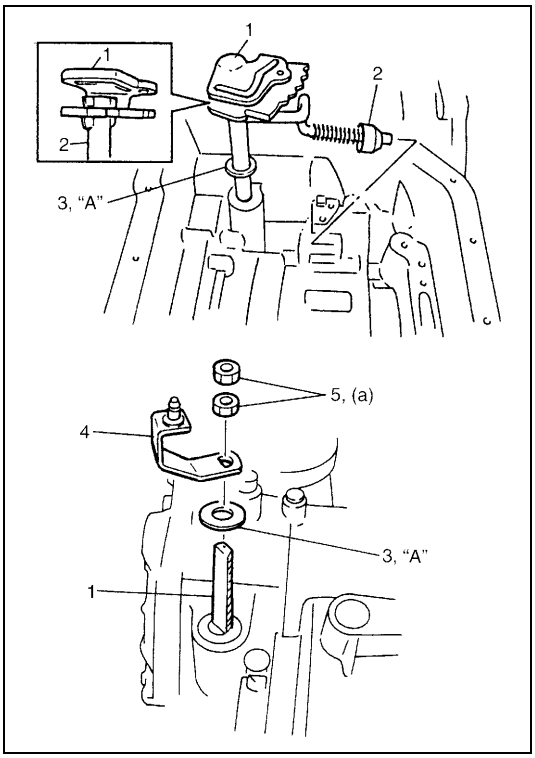

26) Attach parking lock rod (2) to manual shift shaft (1).
27) Install manual shift shaft and washer (3) to transmission case. Fix manual shift shaft with washer, control shift lever (4) and two nuts (5).
Apply grease to the washers.

Tightening torque
Control shift lever nuts
(a) : 30 N·m (3.0 kg-m, 22.0 lb-ft)

"A" : Grease 99000-25030

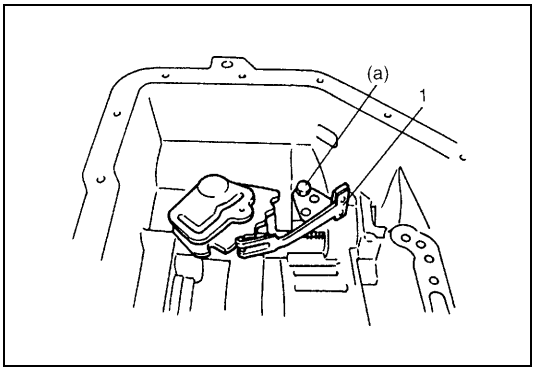

28) Install detent spring (1) to transmission case.

Tightening torque
Detent spring bolt (a) : 11 N·m (1.1 kg-m, 8.0 lb-ft)

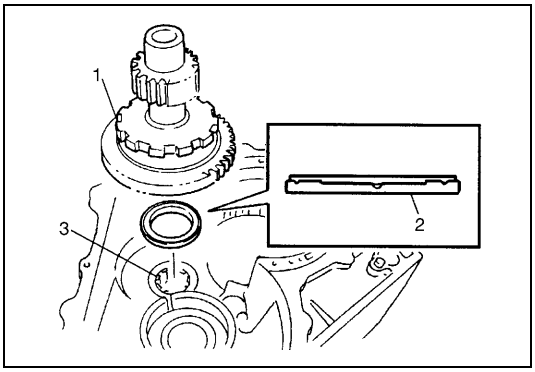

29) Install thrust needle roller bearing (2) on counter bearing (3).
30) Install counter driven gear (1).

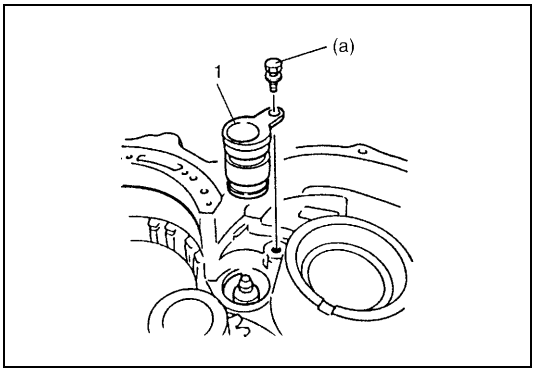

31) Install parking lock pawl sleeve (1) and oil plate (not shown in figure).

Tightening torque
Parking lock pawl sleeve bolt
(a) : 19 N·m (1.9 kg-m, 14.0 lb-ft)

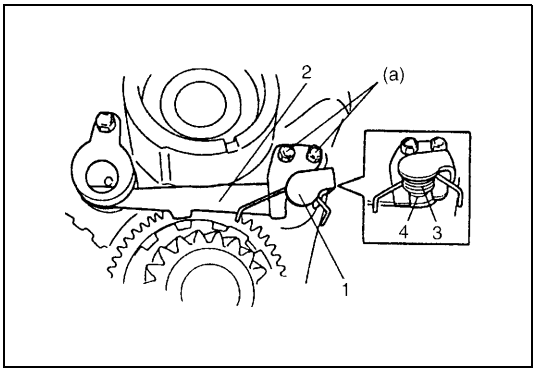

32) Install parking lock pawl (2).
33) Install parking lock pawl shaft (4), torsional spring (3), and cover (1), then hold them with 2 bolts.

Tightening torque
Parking lock pawl bolts (a) : 11 N·m (1.1 kg-m, 8.0 lb-ft)

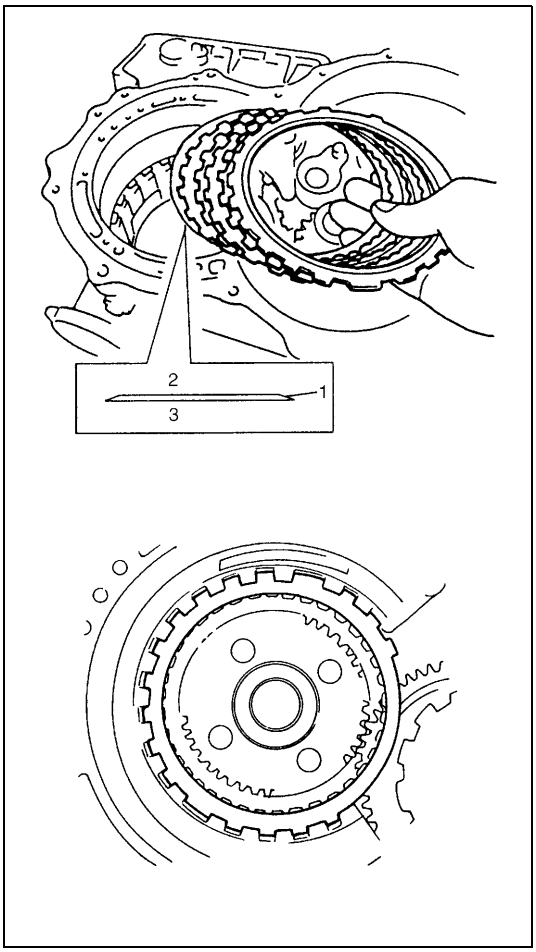

34) Install reverse brake (B2) plates, discs, flange and cushion plate in following order :
(1) Cushion plate → (2) Plate → (3) Disc → (4) Plate → (5) Disc → (6) Plate → (7) Disc → (8) Plate → (9) Disc → (10) Flange

NOTE:

- **Note the direction of cushion plate (1).**
- **Make sure that the plates are fitted into groove of transmission case as shown in figure.**

35) Hold above parts with snap ring.

2. Brake plate side
3. Transmission case side

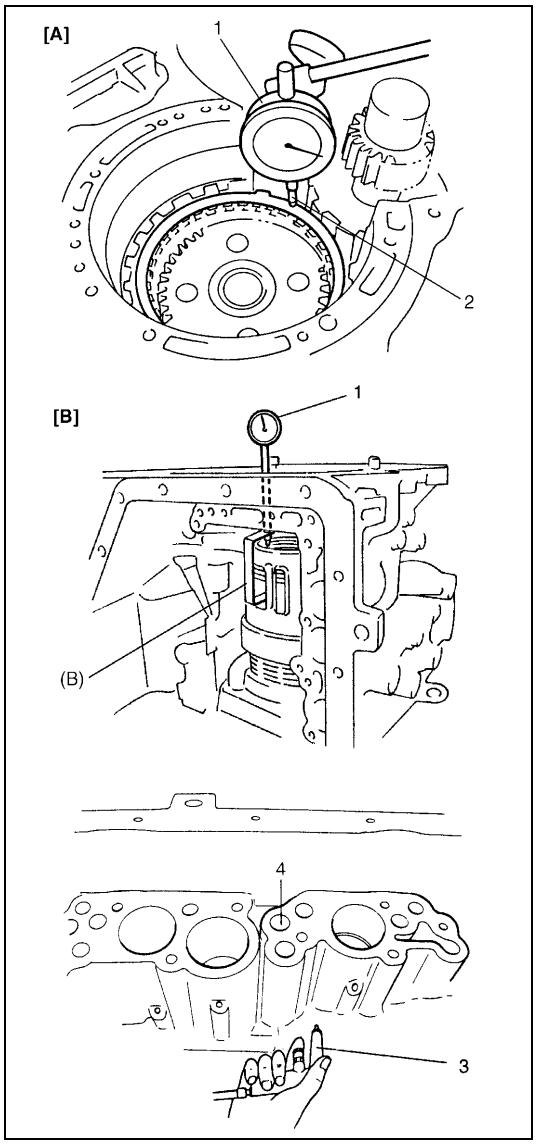

36) Inspect reverse brake (B2) piston stroke and clearance by blowing compressed air into hole (4) shown in figure.
Make sure that the obtained piston stroke and clearance satisfy the standard value.
- Set dial gauge (1) to the top of reverse brake (B2) flange and blow compressed air into the hole shown in figure.

Reverse brake disc clearance
Standard : 0.79 – 1.69 mm (0.031 – 0.067 in.)

- Set special tool (B) on the tip of dial gauge and place the other end of special tool on the claw of reverse brake (B2) piston. Blow compressed air into the hole (4) shown in figure and measure the value for piston stroke.

Reverse brake piston stroke
Standard : 1.77 – 2.59 mm (0.070 – 0.102 in.)

Special tool
(B) : 09952-06020

NOTE:

If clearance and/or piston stroke is out of specification, disassemble reverse brake (B2) discs and plates, reinstall them to satisfy the measured values to standard value.

2.	Tip of dial gauge on the top of B2 brake flange
3.	Air gun
[A] :	Clearance
[B] :	Piston Stroke

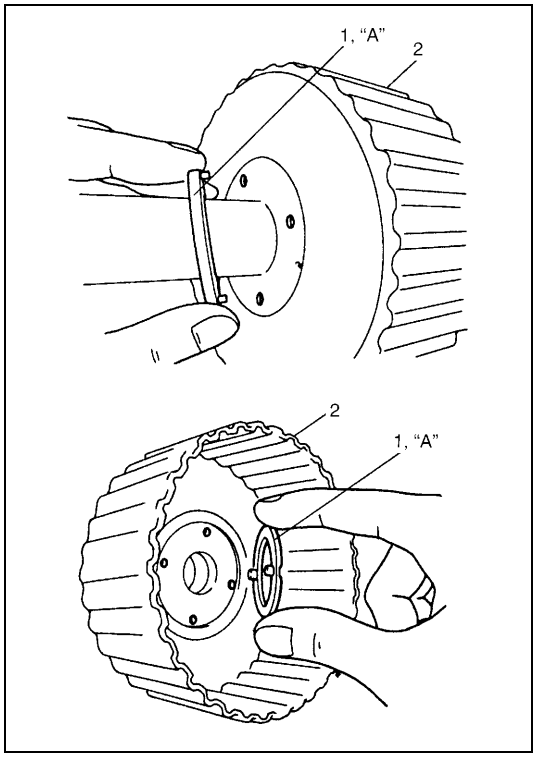

37) Apply grease to thrust washers (1) and install them to follow shaft (2).

NOTE:

When installing thrust washers, make sure that the protrusions of thrust washer do not interfere with the ones of the other side.

"A" : Grease 99000-25030

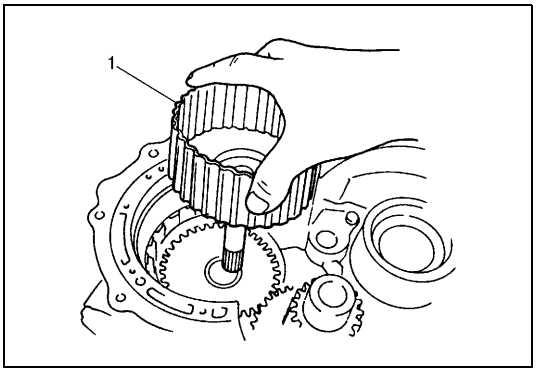

38) Install follow shaft (1) to transmission case.
Turn it right and left to match the reverse brake (B2) discs and the spline of follow shaft.

NOTE:

When installing follow shaft, do not let the thrust washer fall off from follow shaft.

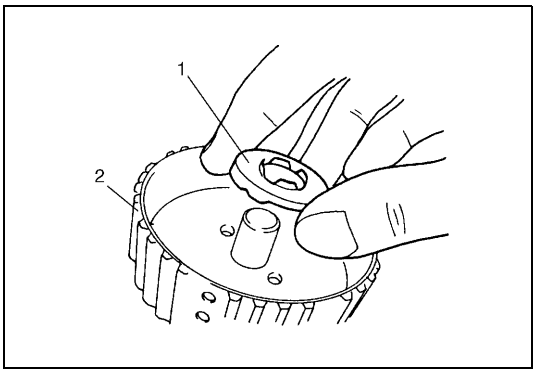

39) Install thrust needle roller bearing (1) to intermediate shaft (2).

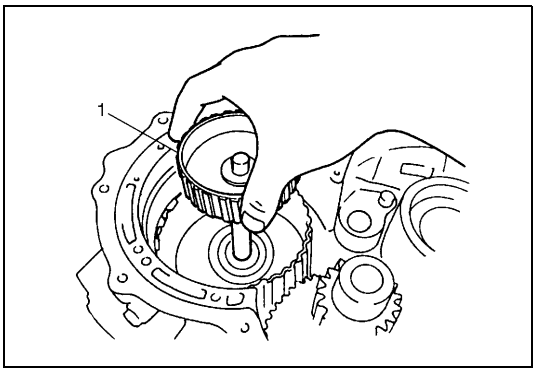

40) Install intermediate shaft (1) to transmission case.

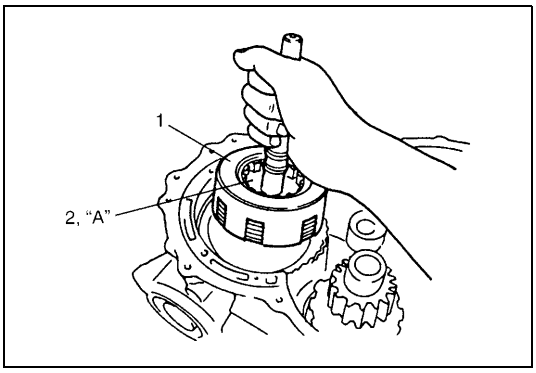

41) Install rear clutch assembly (1) by turning it right and left to match the clutch disc of rear clutch assembly and the spline of intermediate shaft.
42) Install thrust bearing race (2).

"A" : Grease 99000-25030

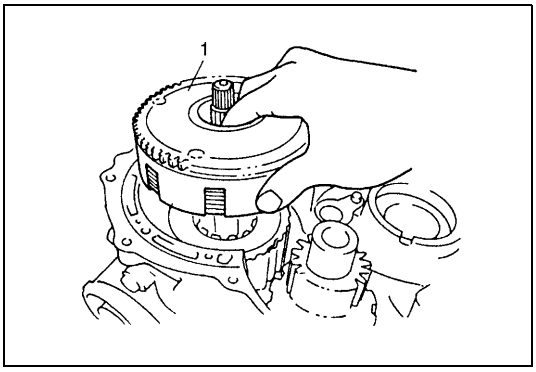

43) Install front clutch assembly (1) by turning it right and left to match the clutch of disc clutch assembly and the spline of follow shaft.

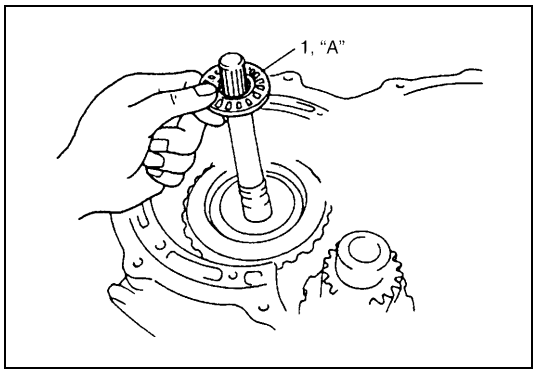

44) Apply grease to thrust needle roller bearing (1) and install it.

"A" : Grease 99000-25030

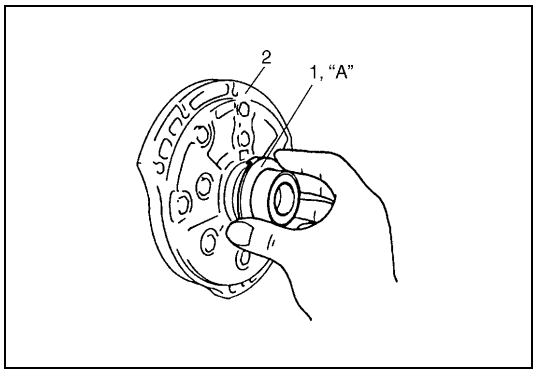

45) Apply grease to clutch drum thrust washer (1) and install it to oil pump assembly (2).

"A" : Grease 99000-25030

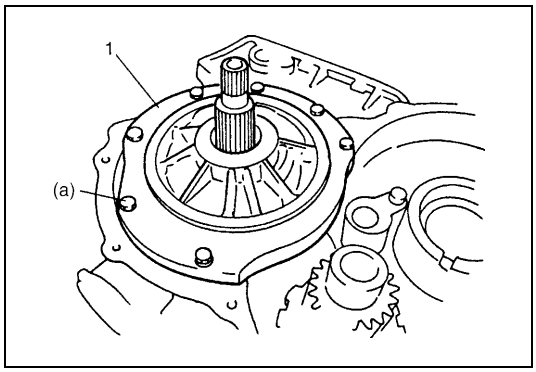

46) Install new gasket to transmission case and install oil pump assembly (1) to transmission case.

Tightening torque
Oil pump assembly bolts (a) : 12 N·m (1.2 kg-m, 9.0 lb-ft)

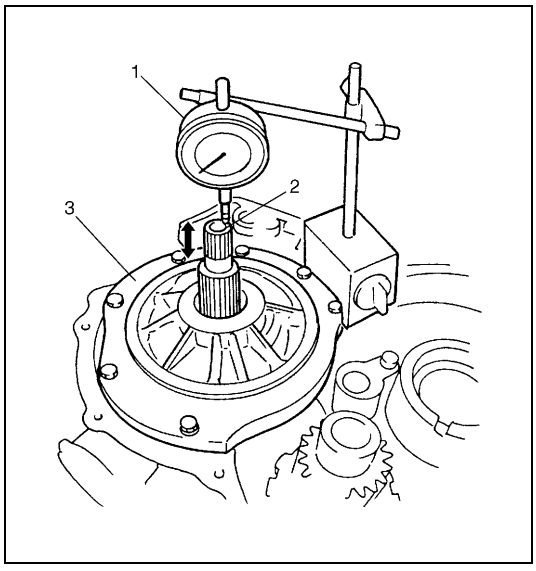

47) Measure input shaft end (2) play.
Set dial gauge (1) as shown in figure and measure the play of the input shaft.

Input shaft end Play
Standard : 0.3 – 0.7 mm (0.012 – 0.028 in.)

48) If the obtained value is out of standard value, select thrust bearing race (installed in step 41)) of different thickness shown in table below and adjust the play.

Available thrust bearing race size (thickness)
1.3 mm (0.051 in.), 1.7 mm (0.067 in.) or 2.1 mm (0.083 in.)

3. Oil pump

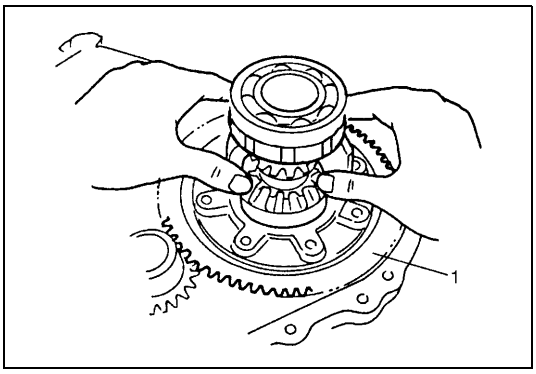

49) Install differential gear assembly (1).

NOTE:

Grease can be applied around the R and L bearing of differential gear assembly to ease fitting to the transmission case and torque converter housing.

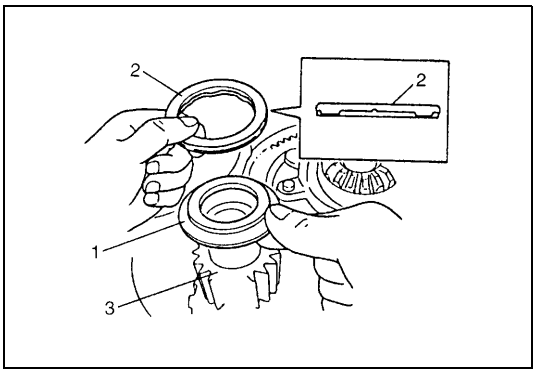

50) Install thrust bearing race (1) and thrust needle roller bearing (2) to the top of counter driven gear (3).

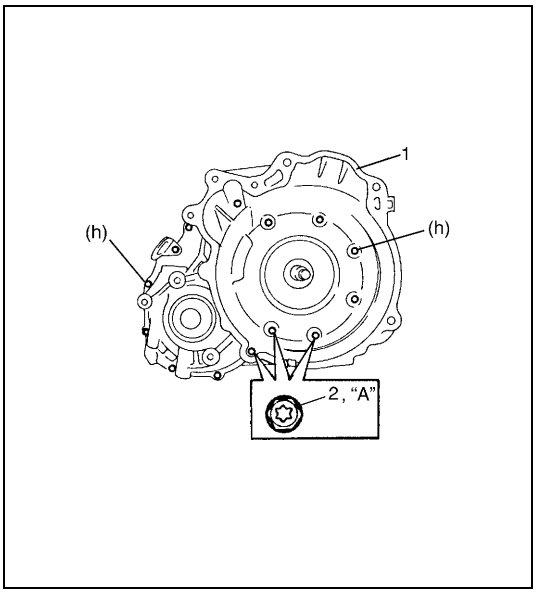

51) Apply grease to oil pump D-ring.
Install new gasket to transmission case and install torque converter housing (1).

Tightening torque
Torque converter housing bolts
(h) : 19 N·m (1.9 kg-m, 14.0 lb-ft)

Grease 99000-25030

NOTE:

Apply thread lock to the three bolts shown in figure.

"A" : Thread lock cement 99000-32110

2. New bolt

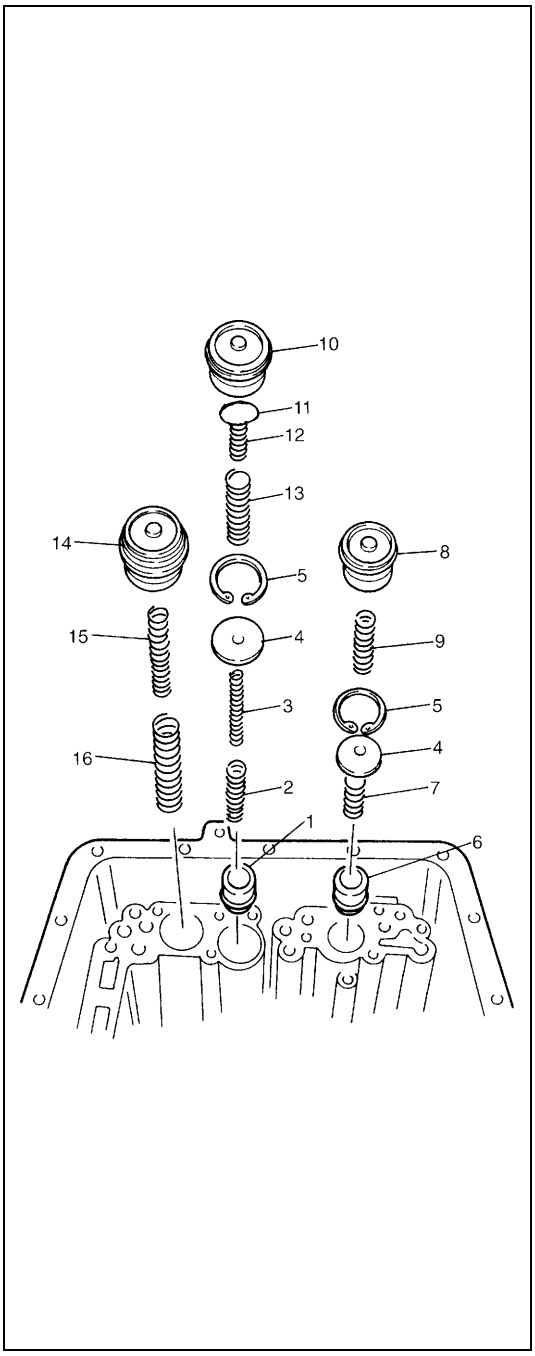

52) Install O-rings to each accumulator piston and apply grease or ATF to them.

Grease 99000-25030

NOTE:

C1 and B0 accumulator pistons are the same.

53) Install C1 and B0 accumulator pistons (1 and 6), springs (2, 3 and 7) and spacers (4).
Hold them with snap rings (5).

NOTE:

- **Make sure that snap rings are fitted to the groove of each cylinder.**
- **Make sure that O-rings are not twisted or caught when installing.**

54) Install C0, B1, C2 accumulator springs (9, 12, 13, 15 and 16), spacer (11) and pistons (8, 10 and 14) as shown in figure.

NOTE:

Make sure that O-rings are not twisted or caught when installing.

1. C1 accumulator piston	9. C0 accumulator spring (with Pink paint)
2. C1 accumulator outer spring (with Yellow paint)	10. B1 accumulator piston
3. C1 accumulator inner spring (with Yellow paint)	11. B1 accumulator spacer
4. Spacer	12. B1 accumulator inner spring (with Orange paint)
5. Snap ring	13. B1 accumulator outer spring (with Orange paint)
6. B0 accumulator piston	14. C2 accumulator piston
7. B0 accumulator spring (with Purple paint)	15. C2 accumulator inner spring (with Light Blue paint)
8. C0 accumulator piston	16. C2 accumulator outer spring (with Light Blue paint)

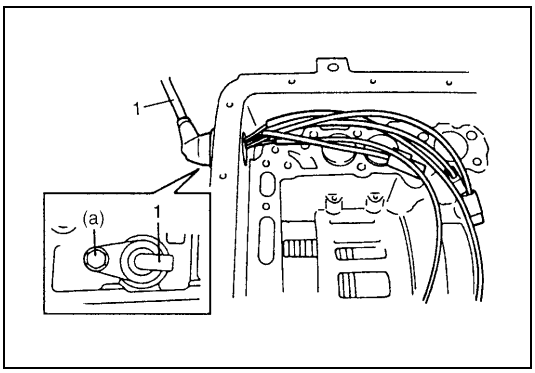

55) Install wire-to-solenoid assembly (1).

NOTE:

Apply grease to O-ring of wire-to-solenoid assembly.

Tightening torque
Wire - to - solenoid assembly bolt
(a) : 8 N·m (0.8 kg-m, 6.0 lb-ft)

Grease 99000-25030

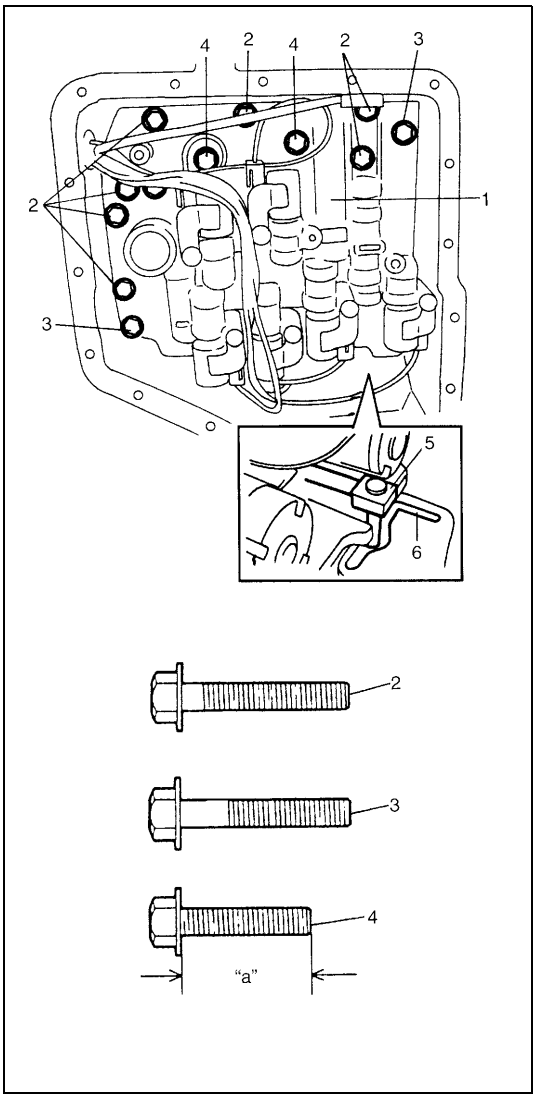

56) Install valve body assembly (1) to transmission case.
First match the pin of the manual valve to the slot of the manual shift shaft.
To fix valve body assembly (1) to transmission case, first tighten bolt B (3), then tighten other bolts.

Tightening torque
Valve body to transmission case bolts
: 10 N·m (1.0 kg-m, 7.5 lb-ft)

Bolt	Length "a"	Pieces
A	30 mm (1.20 in.)	7
B	31 mm (1.22 in.)	2
C	25 mm (0.98 in.)	2

2.	Bolt A
4.	Bolt C
5.	Manual valve pin
6.	Slot of manual shift shaft

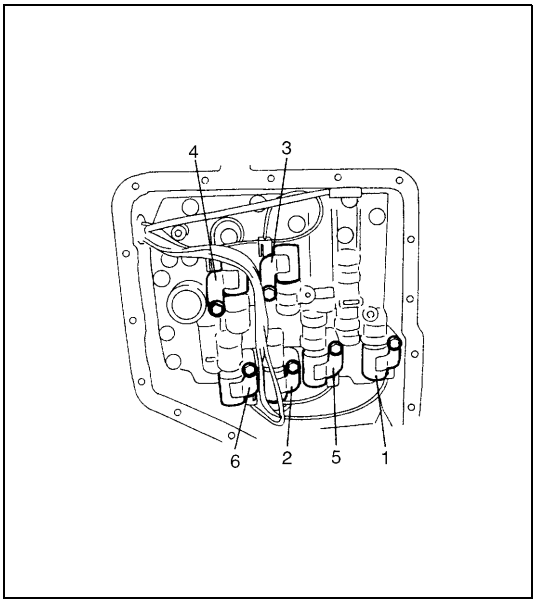

57) Connect couplers of wire-to-solenoid to solenoid valves.

Solenoid Valve	Wire Color
A (No.1)	White
B (No.2)	Black
C (No.3)	Red
D (No.4)	Yellow
E (No.5)	Brown
TCC (Lock-up)	Orange

1.	Solenoid valve No.1
2.	Solenoid valve No.2
3.	Solenoid valve No.3
4.	Solenoid valve No.4
5.	Solenoid valve No.5
6.	Lock-up solenoid

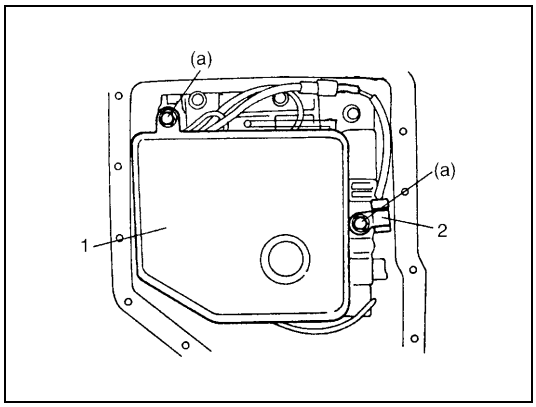

58) Install O-ring to oil strainer assembly (1). Make sure that O-ring is not twisted.
59) Install oil strainer assembly to the top of valve body assembly.
Connect transmission temperature sensor (2) coupler.
Fix transmission temperature sensor and oil strainer assembly with bolts.

Tightening torque
Transmission temperature sensor bolt
(a) : 10 N·m (1.0 kg-m, 7.5 lb-ft)

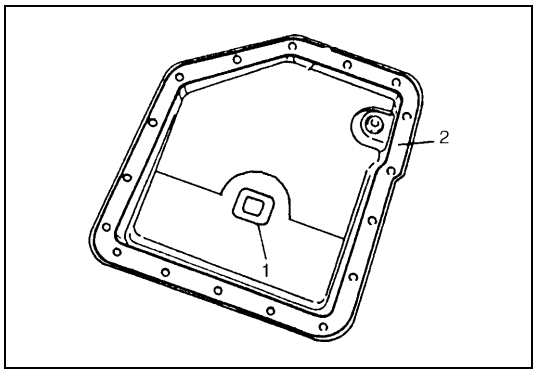

60) Install magnet (1) in oil pan (2).

NOTE:

If metal particles are attached to the magnet, clean them before installing.

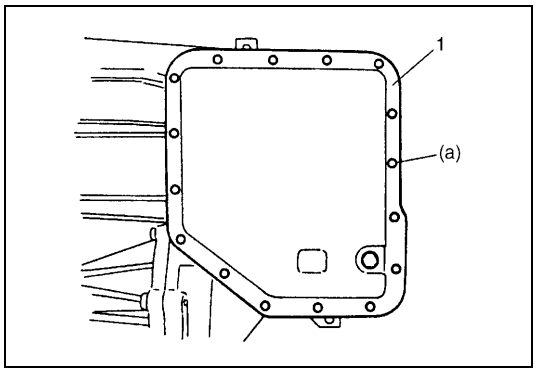

61) Install gasket to transmission case and install oil pan (1).

Tightening torque
A/T oil pan bolts (a) : 7.5 N·m (0.75 kg-m, 5.5 lb-ft)

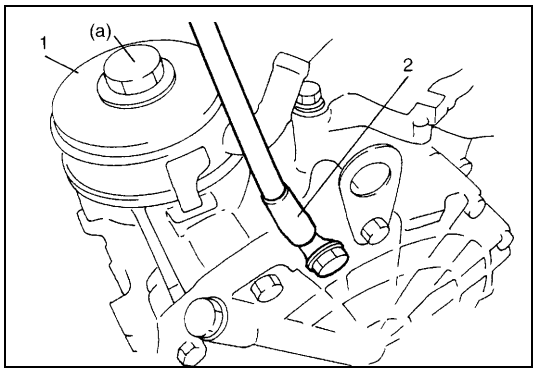

62) Install oil cooler (1) and ground cable (2).

Tightening torque
A/T oil cooler bolt (a): 60 N·m (6.0 kg-m, 43.5 lb-ft)

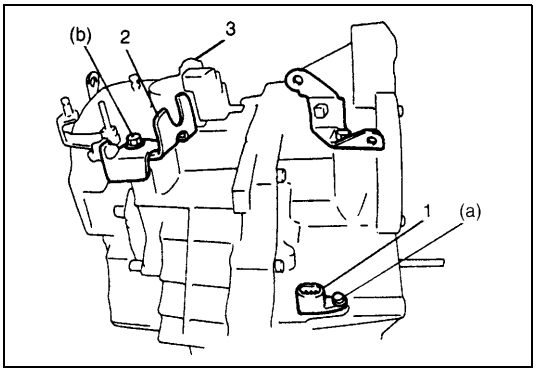

63) Install vehicle speed sensor (for speedometer) (1), shift cable bracket (2) and connector clamp bracket (3).

Tightening torque
Vehicle speed sensor bolt
(a) : 5.5 N·m (0.55 kg-m, 4.0 lb-ft)
Shift cable bracket bolts
(b) : 13 N·m (1.3 kg-m, 9.5 lb-ft)
Connector clamp bracket bolt : 8 N·m (0.8 kg-m, 6.0 lb-ft)

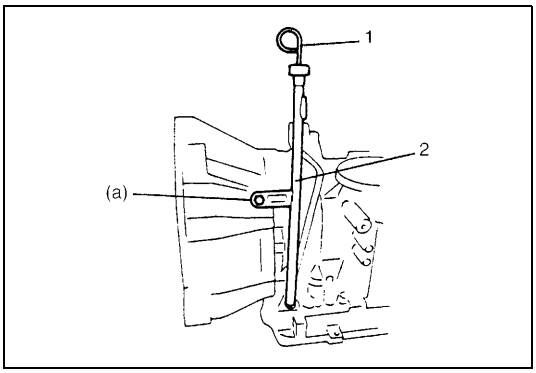

64) Install A/T fluid filler tube (2) and level gauge (1).

Tightening torque
A/T fluid filler tube bolt (a) : 19.5 N·m (1.95 kg-m, 14.5 lb-ft)

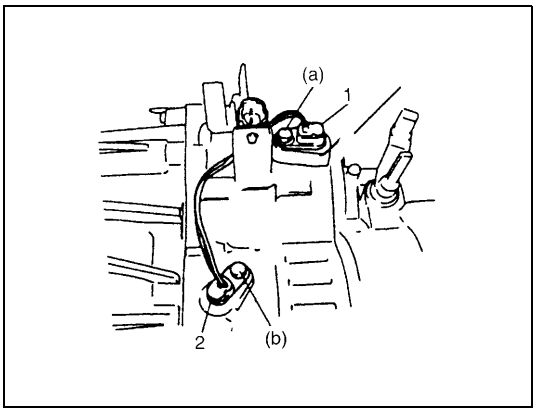

65) Install output shaft speed sensor (1) and input shaft speed sensor (2).
Apply grease to O-ring of each sensor.

Tightening torque
Output shaft speed sensor bolt
(a) : 8 N·m (0.8 kg-m, 6.0 lb-ft)
Input shaft speed sensor bolt
(b) : 8 N·m (0.8 kg-m, 6.0 lb-ft)

Grease : 99000-25030

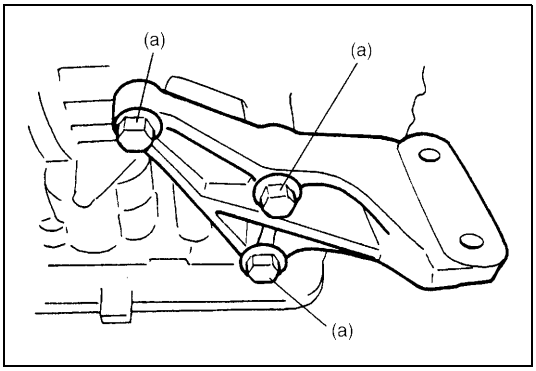

66) Install engine mounting LH bracket.

Tightening torque
Engine mounting LH bracket bolts
(a) : 55 N·m (5.5 kg-m, 40.0 lb-ft)

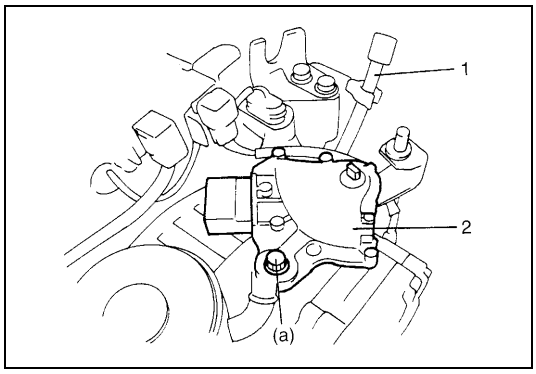

67) Install breather sensor hose (1).
68) Install transmission range sensor (2).
Install it temporarily so that the adjustment can be done after installing assembly back to the vehicle.

Tightening torque
Transmission range sensor bolt
(a) : 18 N·m (1.8 kg-m, 13.0 lb-ft)

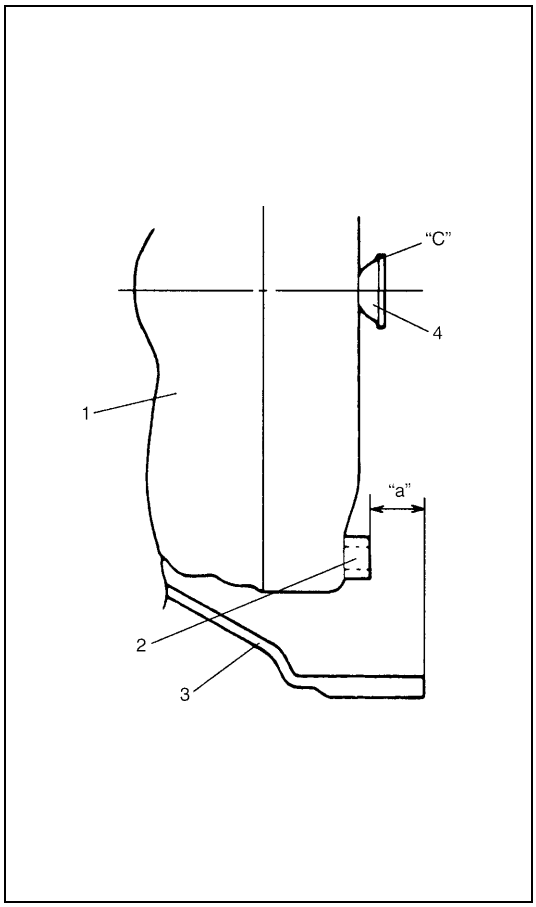

69) Install torque converter (1) to input shaft.
- Install torque converter, using care not to damage oil seal of oil pump.
- After installing torque converter, check to make sure that distance "a" is within specification.

Torque converter installing position
"a" : More than 19.9 mm (0.783 in.)

- Check torque converter for smooth rotation.
- Apply grease around cup at the center of torque converter.

"C" : Grease 99000-25010

CAUTION:
- **Before installing converter, make sure that its pump hub portion is free from nicks, burrs or damage which may cause oil seal to leak.**
- **Be very careful not to drop converter on oil pump gear. Damage in gear, should it occur, may cause a critical trouble.**

2.	Flange nut
3.	Torque converter housing
4.	Cup

TIGHTENING TORQUE SPECIFICATION

Fastening part	Tightening torque		
	N•m	kg-m	lb-ft
A/T fluid drain plug	23	2.3	16.5
Transmission rage sensor bolt	18	1.8	13.0
Output shaft speed sensor bolt	8	0.8	6.0
Input shaft speed sensor bolt	8	0.8	6.0
Dropping resistor bolts	20	2.0	14.5
Shift solenoid bolts	8	0.8	6.0
Transmission temperature sensor bolt	10	1.0	7.5
Transmission to engine bolts and nut	85	8.5	61.5
Drive plate to torque converter bolts	20	2.0	14.5
Starter motor bolts	23	2.3	16.5
Oil pump cover bolts	10	1.0	7.5
Valve body bolts	5.5	0.55	4.0
Final gear bolts	90	9.0	65.0
Counter drive gear installing bolts	5.5	0.55	4.0
Rear cover bolts	19	1.9	14.0
Control shift lever nuts	30	3.0	22.0
Detent spring bolt	11	1.1	8.0
Parking lock pawl sleeve bolt	19	1.9	14.0
Parking lock pawl bolts	11	1.1	8.0
Oil pump assembly bolts	12	1.2	9.0
Torque converter housing bolts	19	1.9	14.0
Wire-to-solenoid assembly bolt	8	0.8	6.0
Valve body to transmission case bolts	10	1.0	7.5
A/T oil pan bolts	7.5	0.75	5.5
A/T oil cooler bolt	60	6.0	43.5
Vehicle speed sensor bolt	5.5	0.55	4.0
Shift cable bracket bolt	13	1.3	9.5
Connector clamp bracket bolt	8	0.8	6.0
A/T fluid filler tube bolt	19.5	1.95	14.5
Engine mounting LH bracket bolts	55	5.5	40.0

SPECIAL TOOL

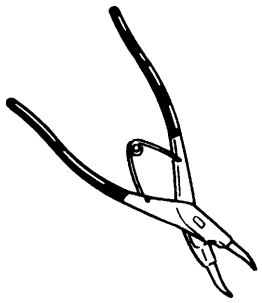 09900-06108 Snap ring plier (Closing type)	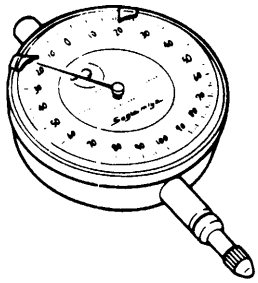 09900-20606 Dial gauge	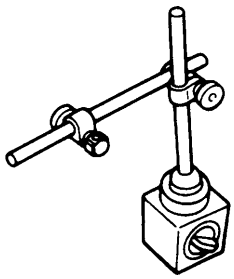 09900-20701 Magnetic stand	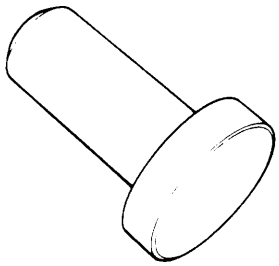 09913-75510 Bearing installer
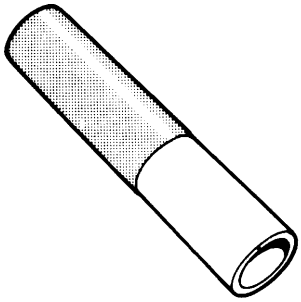 09913-80112 Bearing installer	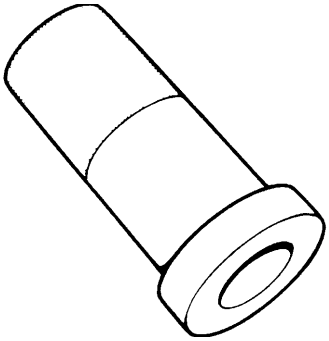 09913-85210 Bearing installer	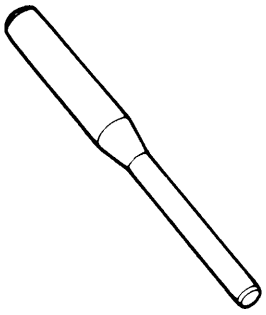 9922-85811 Spring pin remover (6 mm)	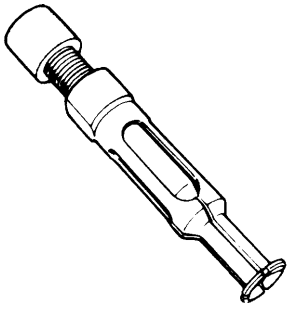 09923-74510 Bearing remover
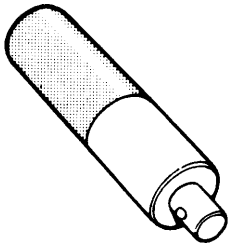 09924-74510 Installer handle	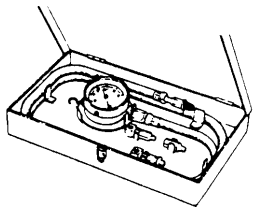 09925-37811-001 Oil pressure gauge	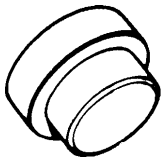 09925-88210 Bearing puller attachment	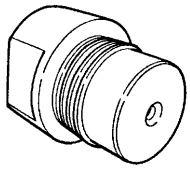 09926-26030 Air installer No.1
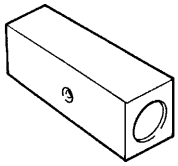 09926-26040 Air installer No.2	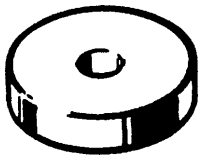 09926-68310 Bearing installer	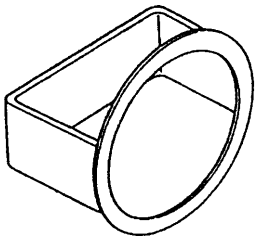 09926-96010 Clutch spring compressor	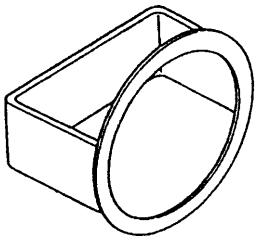 09926-96020 Clutch spring compressor

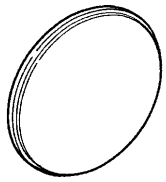 09926-96030 Clutch spring compressor No.7	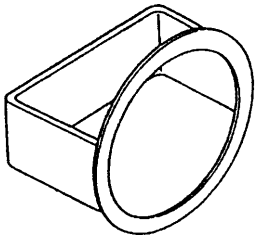 09926-96040 Clutch spring compressor No.8	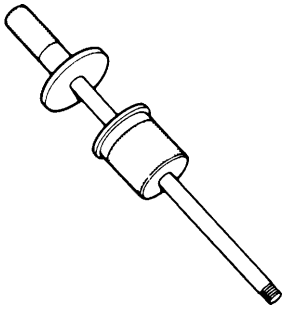 09930-30102 Sliding shaft	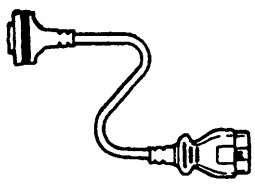 09931-76030 16/14 pin DLC adapter
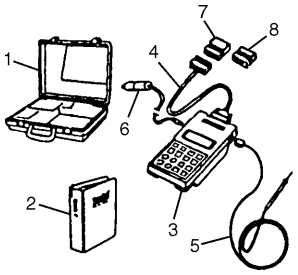 09931-76011 Tech 1A kit See NOTE below.	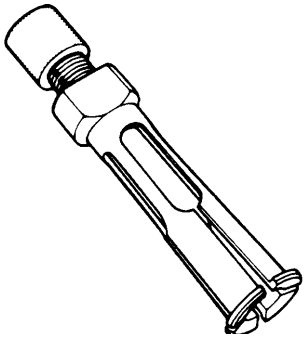 09941-64511 Bearing remover	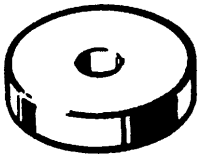 09944-68510 Bearing installer	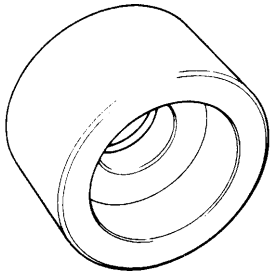 09951-16060 Bush remover
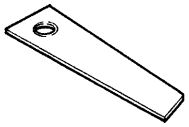 09952-06010 Dial gauge plate No.1	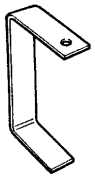 09952-06020 Dial gauge plate No.2	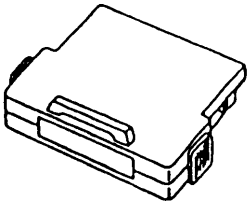 Mass storage cartridge	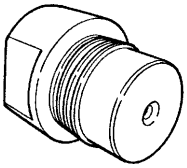 09926-26050 Air installer No.3
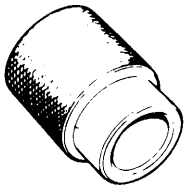 09940-53111 Oil seal install tool			

NOTE:

This kit includes the following items.

1. Storage case, 2. Operator's manual, 3. SUZUKI scan tool (Tech-1A), 4. DLC cable, 5. Test lead / probe, 6. Power source cable, 7. DLC cable adaptor, 8. Self-test adaptor

REQUIRED SERVICE MATERIAL

Material	Recommended SUZUKI product (Part Number)	Use
Automatic transmission fluid	An equivalent of DEXRON®-III or DEXRONR®-IIE	• Automatic transmission • Parts lubrication when installing
Sealant	SUZUKI BOND No. 1215 (99000-31110)	• Case housing star-shaped recess bolts (3 pcs only)
Lithium grease	SUZUKI SUPER GREASE C (99000-25030)	• Retaining parts in place when assembling • Oil seal lips • D-rings • O-rings
	SUZUKI SUPER GREASE A (99000-25010)	• Cable ends • Converter center cup
Thread lock cement	THREAD LOCK 1322 (99000-32110)	• Final gear bolts • Torque converter housing bolts

SECTION 7C

CLUTCH

WARNING:

For vehicles equipped with Supplemental Restraint (Air Bag) System:

- **Service on and around the air bag system components or wiring must be performed only by an authorized SUZUKI dealer. Refer to "Air Bag System Components and Wiring Location View" under "General Description" in air bag system section in order to confirm whether you are performing service on or near the air bag system components or wiring. Please observe all WARNINGS and "Service Precautions" under "On-Vehicle Service" in air bag system section before performing service on or around the air bag system components or wiring. Failure to follow WARNINGS could result in unintentional activation of the system or could render the system inoperative. Either of these two conditions may result in severe injury.**
- **Technical service work must be started at least 90 seconds after the ignition switch is turned to the "LOCK" position and the negative cable is disconnected from the battery. Otherwise, the system may be activated by reserve energy in the Sensing and Diagnostic Module (SDM).**

CONTENTS

GENERAL DESCRIPTION 7C-2
DIAGNOSIS 7C-3
ON-VEHICLE SERVICE 7C-4
CLUTCH CABLE 7C-4
CLUTCH PEDAL AND CLUTCH PEDAL BRACKET 7C-6
CLUTCH PEDAL HEIGHT 7C-7
CLUTCH PEDAL FREE TRAVEL 7C-7
UNIT REPAIR OVERHAUL 7C-8
CLUTCH COVER, CLUTCH DISC AND FLYWHEEL 7C-8
CLUTCH RELEASE SYSTEM 7C-11
TIGHTENING TORQUE SPECIFICATION 7C-14
REQUIRED SERVICE MATERIAL 7C-14
SPECIAL TOOL 7C-14

GENERAL DESCRIPTION

The clutch is a diaphragm-spring clutch of a dry single disc type. The diaphragm spring is of a tapering-finger type, which is a solid ring in the outer diameter part, with a series of tapered fingers pointing inward.

The disc, carrying four torsional coil springs, is positioned on the transmission input shaft with an involute spline fit.

The clutch cover is secured to the flywheel, and carries the diaphragm spring in such a way that the peripheral edge part of the spring pushes on the pressure plate against the flywheel (with the disc in between), when the clutch release bearing is held back. This is the engaged condition of the clutch.
Depressing the clutch pedal causes the release bearing to advance and pushes on the tips of the tapered fingers of the diaphragm spring. When this happens, the diaphragm spring pulls the pressure plate away from the flywheel, thereby interrupting the flow of drive from flywheel through clutch disc to transmission input shaft.

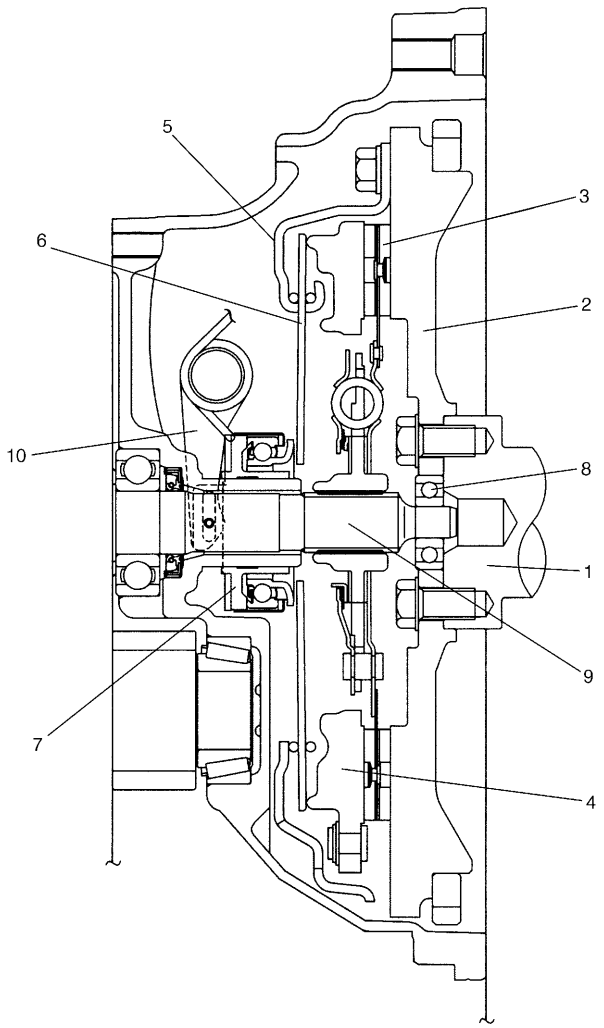

1. Crankshaft	6. Diaphragm spring
2. Flywheel	7. Release bearing
3. Clutch disc	8. Input shaft bearing
4. Pressure plate	9. Input shaft
5. Clutch cover	10. Release shaft

DIAGNOSIS

Condition	Possible Cause	Correction
Slipping	Improper clutch pedal free travel	Adjust free travel.
	Worn or oily clutch disc facing	Replace disc.
	Warped disc, pressure plate or flywheel surface	Replace disc, clutch cover or flywheel.
	Weakened diaphragm spring	Replace clutch cover.
	Rusted clutch cable	Replace cable.
Dragging clutch	Improper clutch pedal free travel	Adjust free travel.
	Weakened diaphragm spring, or worn spring tip	Replace clutch cover.
	Rusted input shaft splines	Lubricate.
	Damaged or worn splines of transmission input shaft	Replace input shaft.
	Excessively wobbly clutch disc	Replace disc.
	Clutch facings broken or dirty with oil	Replace disc.
Clutch vibration	Glazed (glass-like) clutch facings	Repair or replace disc.
	Clutch facings dirty with oil	Replace disc.
	Release bearing slides unsmoothly on input shaft bearing retainer	Lubricate or replace input shaft bearing retainer.
	Wobbly clutch disc, or poor facing contact	Replace disc.
	Weakened torsion springs in clutch disc	Replace disc.
	Clutch disc rivets loose	Replace disc.
	Distorted pressure plate or flywheel surface	Replace clutch cover or flywheel.
	Weakened engine mounting or loosened engine mounting bolt or nut	Retighten or replace mounting.
Noisy clutch	Worn or broken release bearing	Replace release bearing.
	Input shaft front bearing worn down	Replace input shaft bearing.
	Excessive rattle of clutch disc hub	Replace disc.
	Cracked clutch disc	Replace disc.
	Pressure plate and diaphragm spring rattling	Replace clutch cover.
Grabbing clutch	Clutch disc facings soaked with oil	Replace disc.
	Clutch disc facings excessively worn	Replace disc.
	Rivet heads showing out of facing	Replace disc.
	Weakened torsion springs	Replace disc.

ON-VEHICLE SERVICE

CLUTCH CABLE

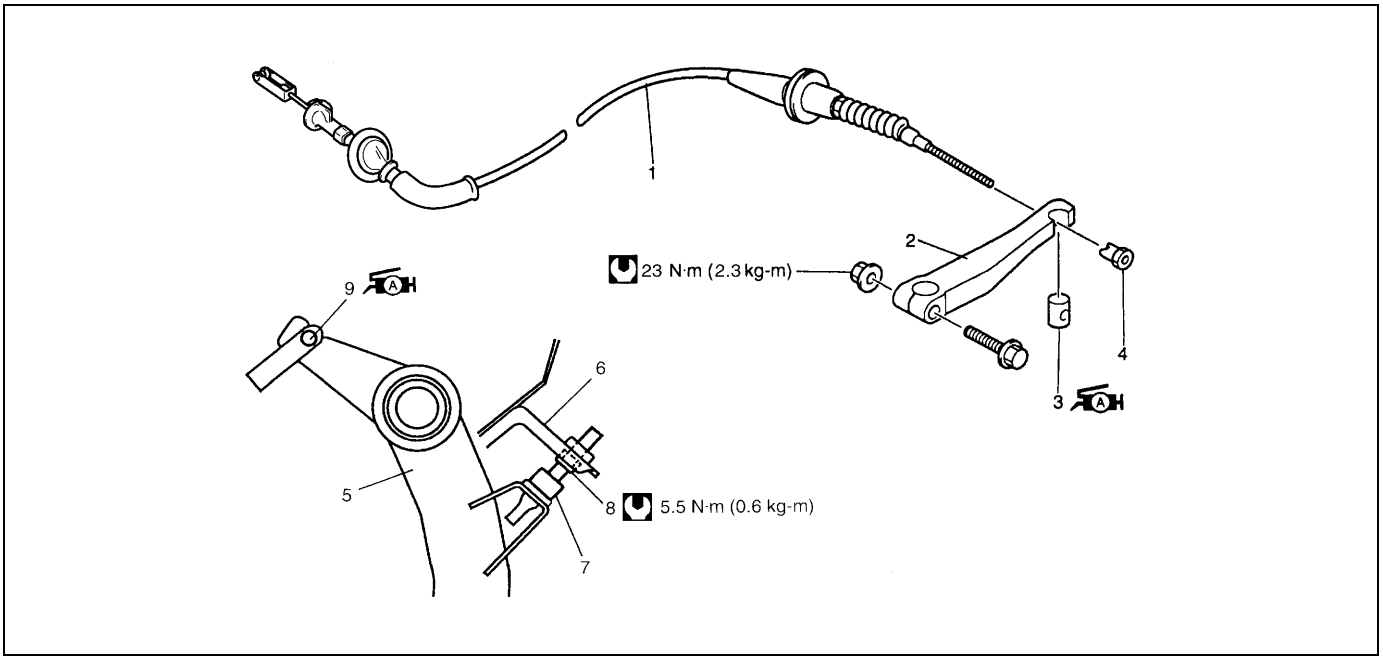

	1. Clutch cable		6. Pedal bracket
	2. Release lever		7. Adjusting bolt
A	3. Joint pin : Apply grease 99000-25010 to joint pin.		8. Lock nut
	4. Joint nut	A	9. Clutch cable hook : Apply grease 99000-25010 to cable hook.
	5. Clutch pedal		Tightening torque

REMOVAL

1) Disconnect negative cable at battery.

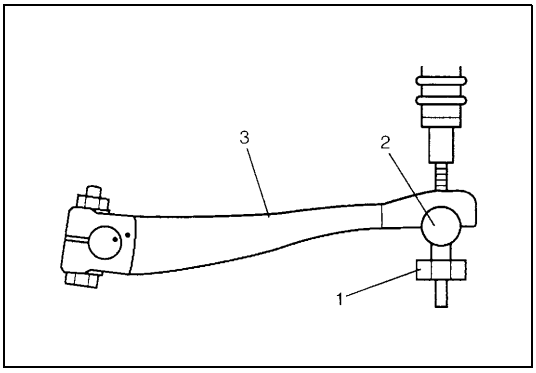

2) Remove clutch cable joint nut (1).
3) Remove joint pin (2) from clutch release lever (3).

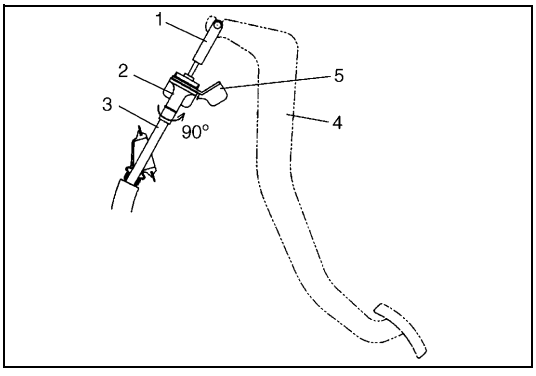

4) Disconnect cable hook (1) from clutch pedal (4).
5) Remove clutch cable (3) from bracket (5) by turning cable cap (2) about 90° as shown.

INSPECTION

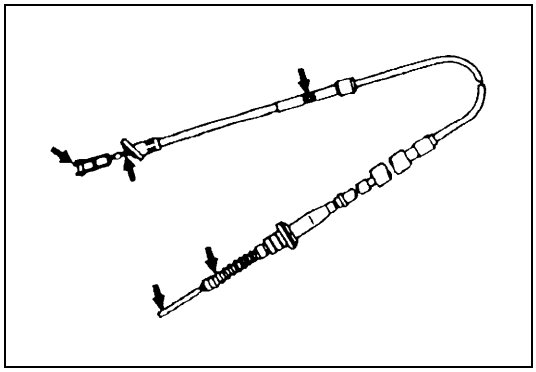

Inspect clutch cable and replace it for any of the following conditions.

- Excessive cable friction
- Frayed cable
- Bent or kinked cable
- Broken boots
- Worn end

INSTALLATION

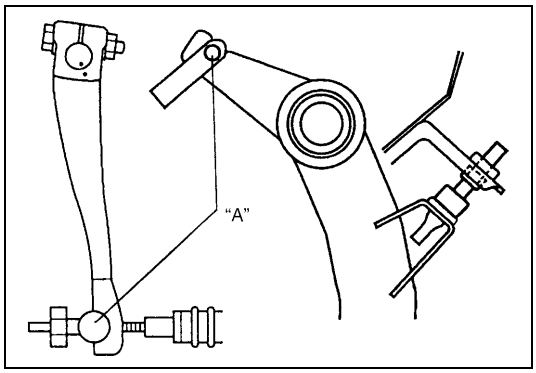

1) Apply grease to cable end hook and also joint pin before installing cable.

"A" : Grease 99000-25010

2) Hook cable end with pedal by using screwdriver or long nose pliers from cabin inside, then join inner cable wire joint pin in release lever.

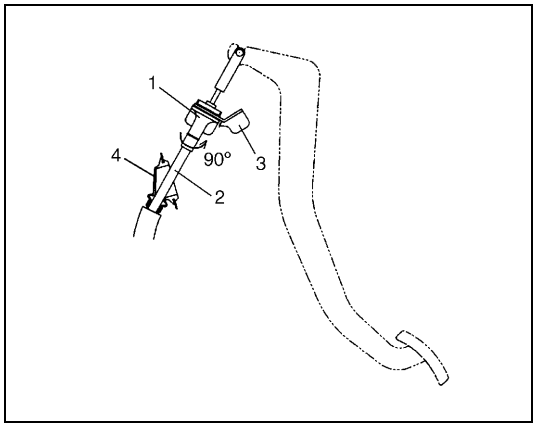

3) Install clutch cable (2) to bracket (3) by turning cable cap (1) about 90° as shown.
4) Screw in joint nut and adjust free travel of pedal to specification by turning nut.
5) Check clutch for proper function with engine running.

NOTE:

Take care that cable grommet (4) has specific installing direction as shown in the figure.

CLUTCH PEDAL AND CLUTCH PEDAL BRACKET

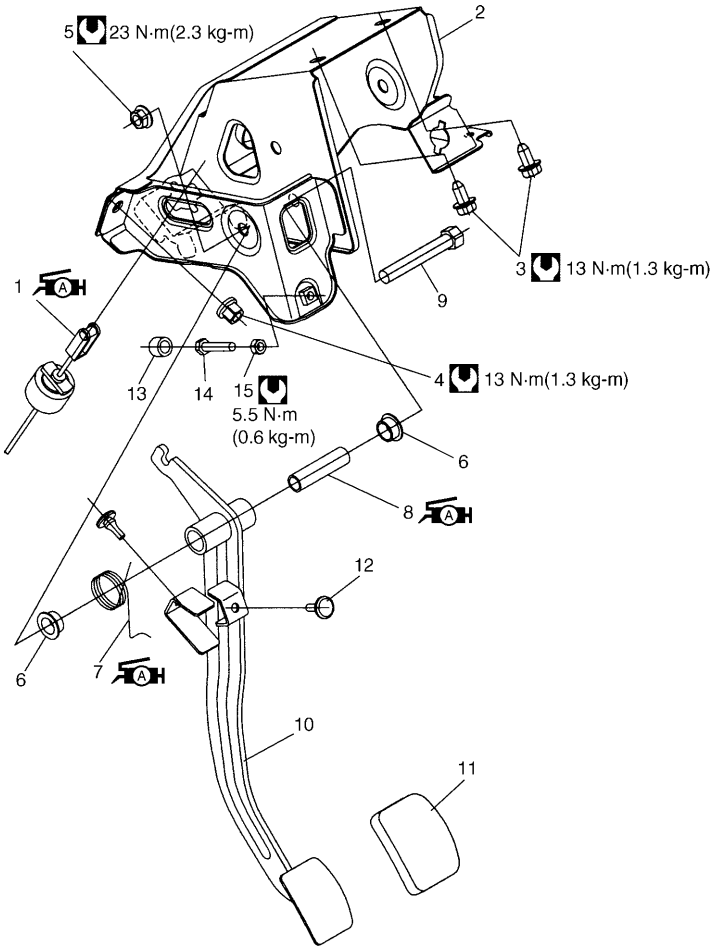

A H	1. Clutch cable hook : Apply grease 99000-25010 to cable hook.	A H	7. Pedal spring : Apply grease 99000-25010 to inside surface of spring.	13. Adjusting bolt cap	
	2. Clutch pedal bracket	A H	8. Pedal shaft spacer : Apply grease 99000-25010 to outside surface of spacer.	14. Adjusting bolt	
	3. Bolt		9. Pedal shaft	15. Lock nut	
	4. Nut		10. Clutch pedal		Tightening torque
	5. Pedal shaft nut		11. Pedal pad		
	6. Pedal bush		12. Pedal return cushion		

CLUTCH PEDAL HEIGHT

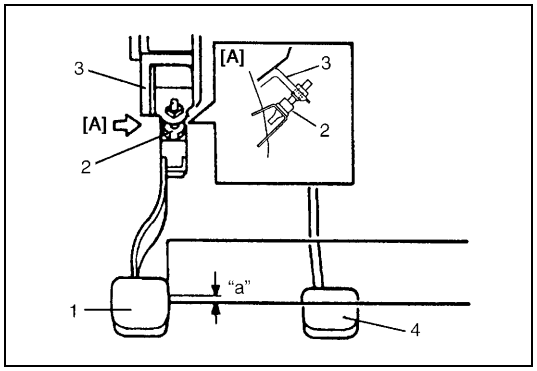

Adjust clutch pedal (1) height with adjusting bolt (2) located on pedal bracket (3) so that clutch pedal height is same as brake pedal (4) height.

Height difference
"a" : 0 mm (0 in.)

CLUTCH PEDAL FREE TRAVEL

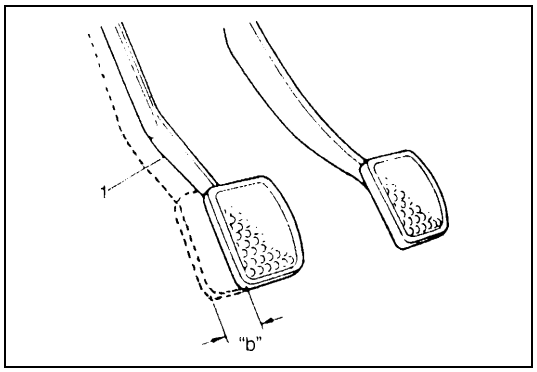

1) Confirm that clutch pedal height is specification.
2) Depress clutch pedal (1), stop the moment clutch resistance is felt, and measure distance (clutch pedal free travel). Free travel should be within the following specification.

Pedal free travel
"b" : 15 – 20 mm (0.6 – 0.8 in.)

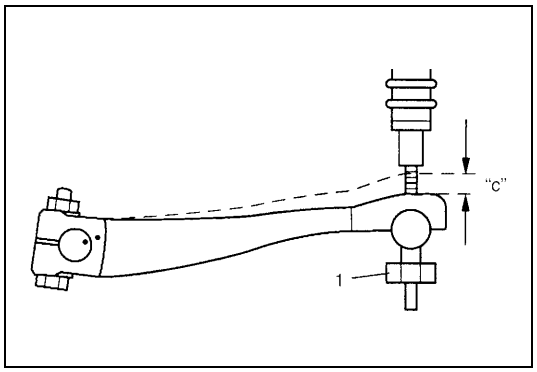

3) If free travel is out of specification, adjust it with cable joint nut (1).

Release lever free travel (Reference)
"c" : 0 – 2 mm (0 – 0.08 in.)

4) After checking clutch pedal free travel, also check clutch for proper function with engine running.

UNIT REPAIR OVERHAUL

CLUTCH COVER, CLUTCH DISC AND FLYWHEEL

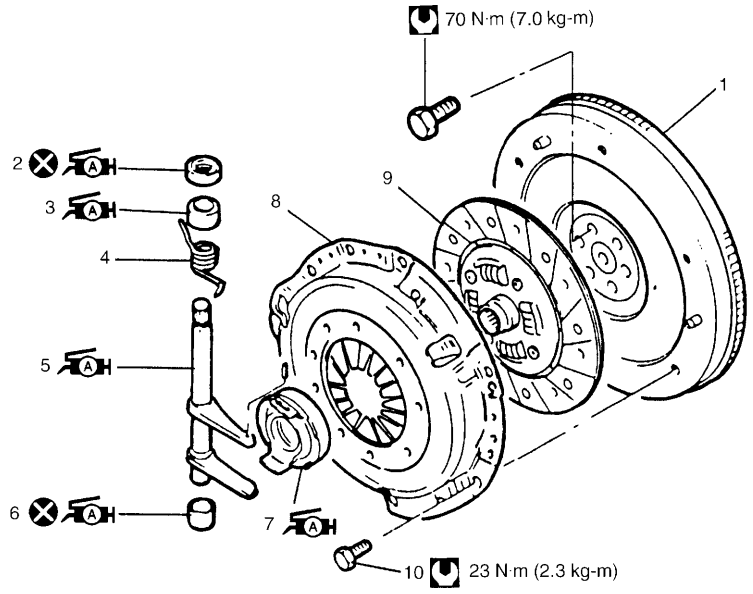

	1. Flywheel		7. Release bearing : Apply grease 99000-25010 to joint of bearing and release shaft and also bearing inside. (0.3 g)
	2. Clutch release shaft seal : Apply grease 99000-25010 to seal lip. (0.3 g)		8. Clutch cover
	3. Clutch release shaft No.2 bush : Apply grease 99000-25010 to bush inside. (0.3 g)		9. Clutch disc
	4. Return spring		10. Clutch cover bolt
	5. Clutch release shaft Apply grease 99000-25010 to the end of release shaft arm. (0.3 g)		Tightening torque
	6. Clutch release shaft No.1 bush : Apply grease 99000-25010 to bush inside. (0.3 g)		Do not reuse.

REMOVAL

1) Dismount transmission assembly referring to Section 7A.

2) Hold flywheel stationary with special tool (A) and remove clutch cover bolts (1), clutch cover (2) and clutch disc.

Special tool
(A) : 09924-17810

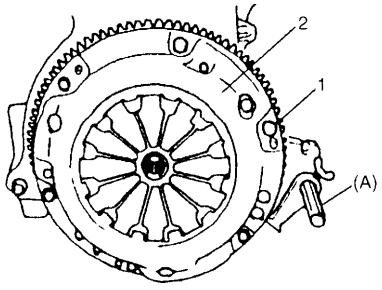

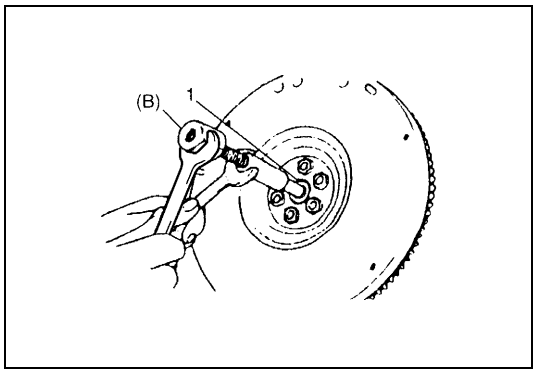

3) Pull out input shaft bearing (1) by using special tool (B), and wrench.

Special tool
(B) : 09921-26020
09930-30104

INSPECTION

Input Shaft Bearing

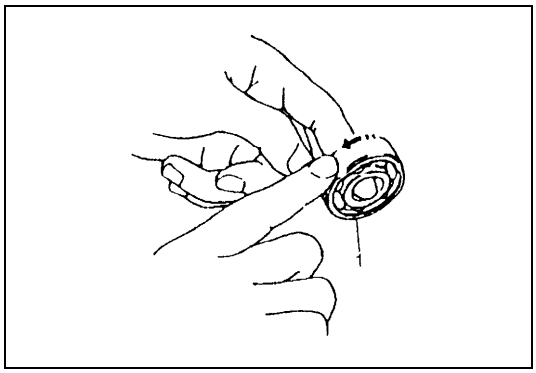

Check bearing (1) for smooth rotation and replace it if abnormality is found.

Clutch Disc

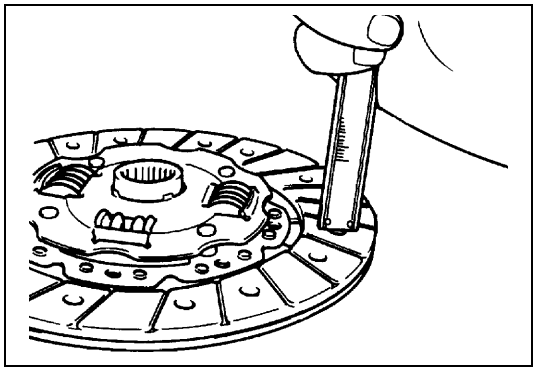

Measure depth of rivet head depression, i.e. distance between rivet head and facing surface. If depression is found to have reached service limit at any of holes, replace disc assembly.

Rivet head depth
Standard : 1.65 – 2.25 mm (0.06 – 0.09 in.)
Service limit : 0.5 mm (0.02 in.)

Clutch Cover

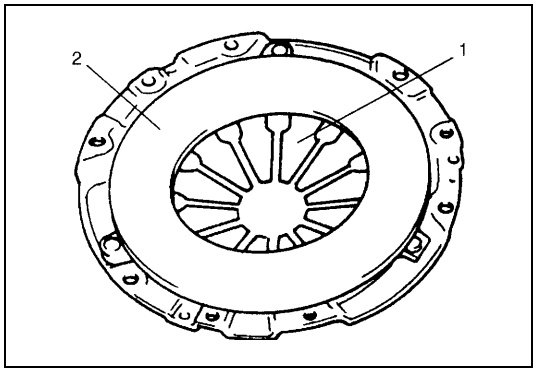

1) Check diaphragm spring (1) for abnormal wear or damage.
2) Inspect pressure plate (2) for wear or heat spots.
3) If abnormality is found, replace it as assembly. Do not disassemble it into diaphragm and pressure plate.

Flywheel

Check surface contacting clutch disc for abnormal wear or heat spots. Replace or repair as required.

INSTALLATION

NOTE:

Before assembling, make sure that flywheel surface and pressure plate surface have been cleaned and dried thoroughly.

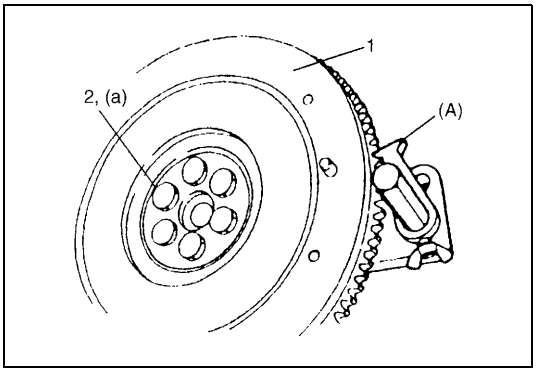

1) Install flywheel (1) to crankshaft and tighten bolts (2) to specification.

Special tool
(A) : 09924-17810

Tightening torque
Flywheel bolts (a) : 70 N·m (7.0 kg-m, 50.5 lb-ft)

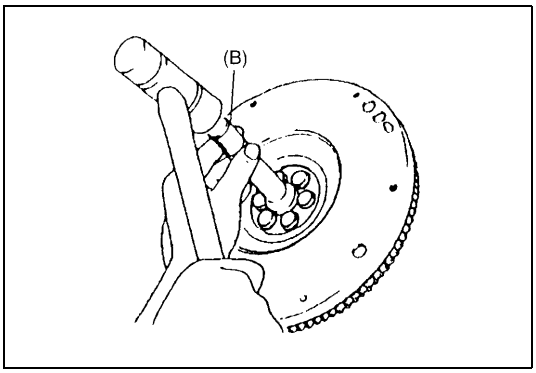

2) Using special tool, install input shaft bearing to flywheel.

Special tool
(B) : 09925-98210

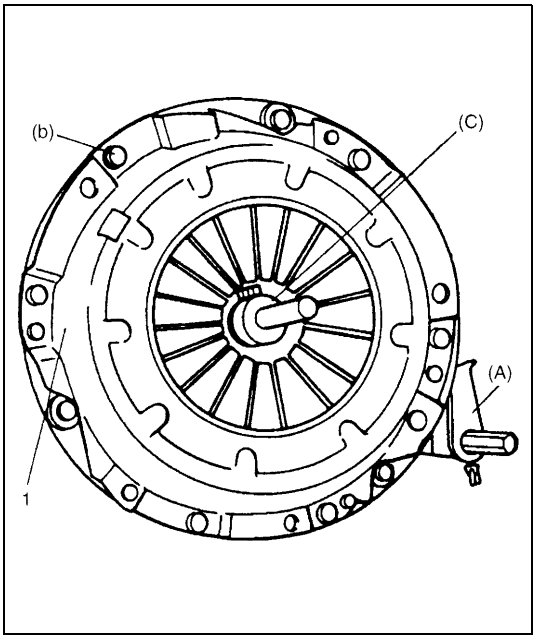

3) Aligning clutch disc to flywheel center by using special tool, install clutch cover (1) and bolts. Then tighten bolts to specification.

NOTE:

- **While tightening clutch cover bolts, compress clutch disc with special tool (C) by hand so that disc centered.**
- **Tighten cover bolts little by little evenly in diagonal order.**

Special tool
(A) : 09924-17810
(C) : 09923-36320

Tightening torque
Clutch cover bolts (b) : 23 N·m (2.3 kg-m, 16.5 lb-ft)

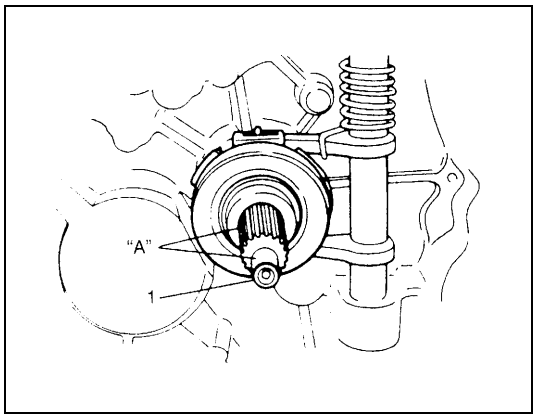

4) Slightly apply grease to input shaft (1), then join transmission assembly with engine. Refer to Section 7A for remounting procedure.

"A" : Grease, 99000-25210

NOTE:

When inserting transmission input shaft to clutch disc, turn crankshaft little by little to match splines.

CLUTCH RELEASE SYSTEM

REMOVAL

1) Remove release lever by loosening its bolt.

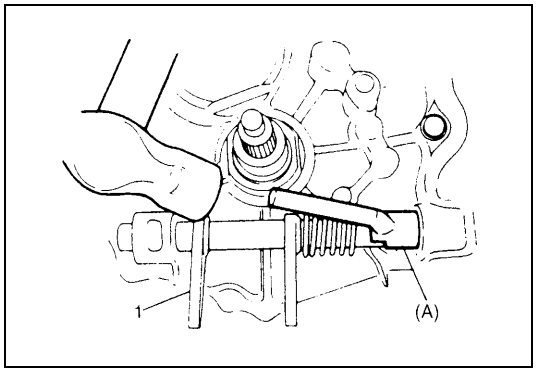

2) Take out release bearing by turning release shaft (1).
3) Unhook return spring by using pliers.
4) Drive out No.2 bush by using special tool and hammer. Release shaft seal will also be pushed out.

Special tool
(A) : 09922-46010

5) Remove release shaft and return spring.

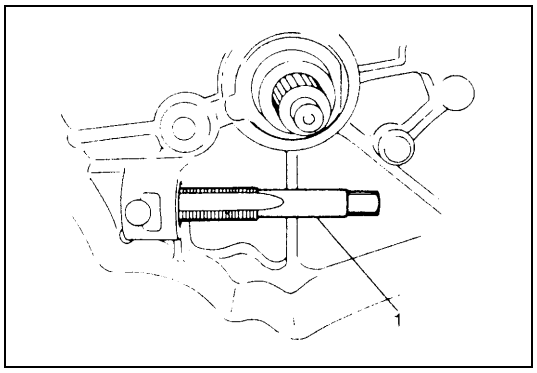

6) Install tap (M16 X 1.5) (1) to clutch release shaft No.1 bush.

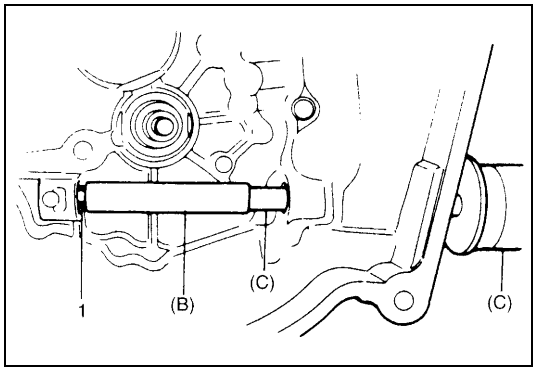

7) Pull out No.1 bush by using tap (1) and special tools.

Special tool
(B) : 09923-46020
(C) : 09930-30104

INSPECTION

Clutch release bearing

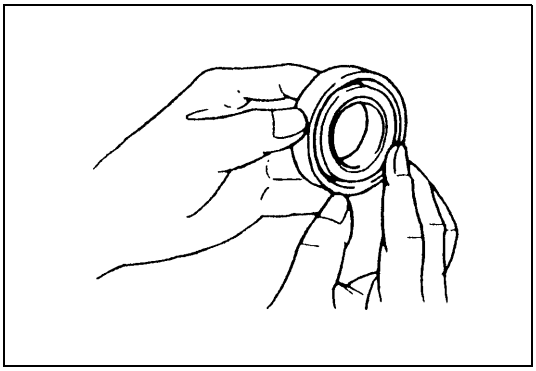

Check clutch release bearing for smooth rotation.
If abnormality is found, replace it.

CAUTION:
Do not wash release bearing. Washing may cause grease leakage and consequential bearing damage.

Clutch release shaft

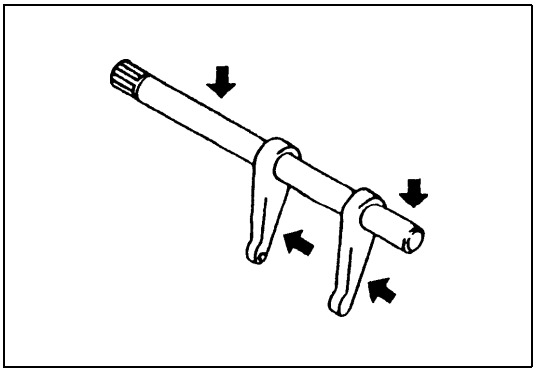

Check clutch release shaft and its pin for deflection or damage.
If abnormality is found, replace it.

INSTALLATION

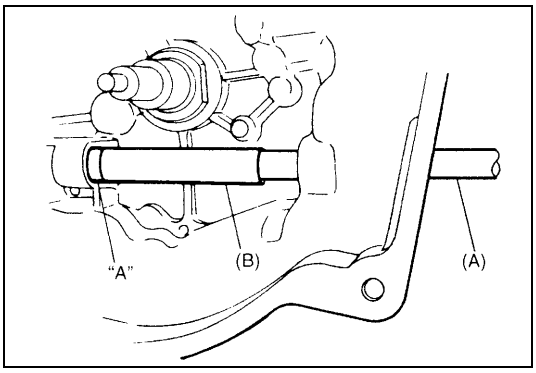

1) Drive in a new No.1 bush by using special tools and then apply grease to bush inside.

Special tool
(A) : 09930-30104
(B) : 09923-46030

"A" : Grease 99000-25010

2) Install release shaft with return spring applied to it.

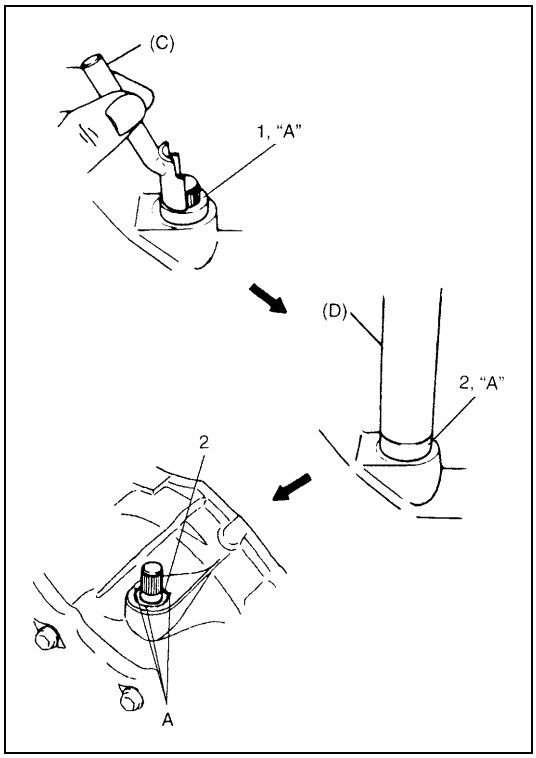

3) Apply grease to No.2 bush (1) inside and press-fit it by using the same special tool as in removal.

"A" : Grease 99000-25010

Special tool
(C) : 09922-46010

4) Coat grease to shaft seal (2) lip and then install it till it is flush with case surface. Use special tool for this installation and face seal lip downward (inside).

"A" : Grease 99000-25010

Special tool
(D) : 09925-98221

5) Caulk seal at A by using caulking tool and hammer.

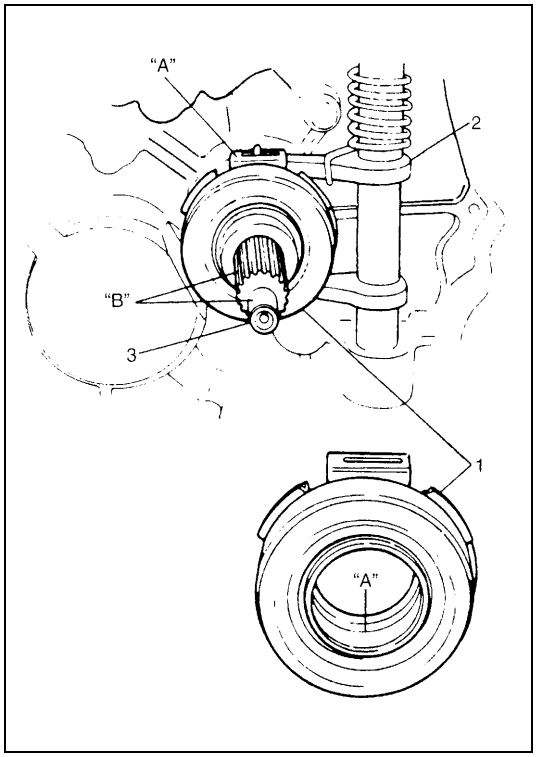

6) Hook return spring.
7) Apply grease to release bearing (1) inside and release shaft arm (2), then set bearing.

"A" : Grease 99000-25010

8) Apply small amount of grease to input shaft (3) spline (0.3 g) and front end (0.15 g) as well.

"B" : Grease 99000-25210

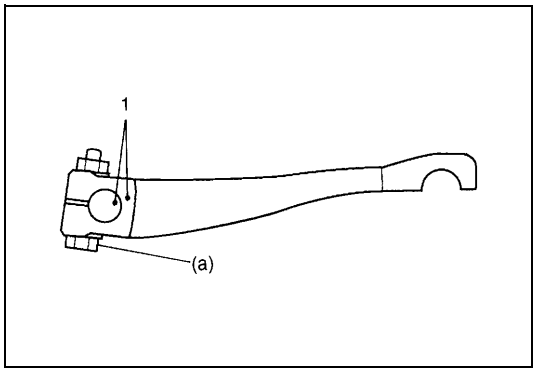

9) Set release lever to release shaft aligning their punch marks (1), then tighten bolt.

Tightening torque
Release lever bolt (a) : 23 N·m (2.3 kg-m, 16.5 lb-ft)

TIGHTENING TORQUE SPECIFICATION

Fastening part	Tightening torque		
	N•m	kg-m	lb-ft
Flywheel bolts	70	7.0	50.5
Clutch cover bolts	23	2.3	16.5
Release lever bolt	23	2.3	16.5

REQUIRED SERVICE MATERIAL

Material	Recommended SUZUKI product (Part Number)	Use
Lithium grease	SUZUKI SUPER GREASE A (99000-25010)	• Cable end hook and joint pin. • Release shaft bushes and seal. • Release shaft arm. • Release bearing inside.
	SUZUKI SUPER GREASE I (99000-25210)	Input shaft spline and front end.

SPECIAL TOOL

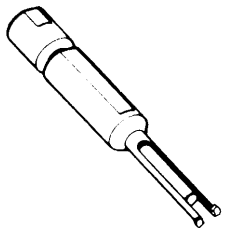 09921-26020 Bearing remover	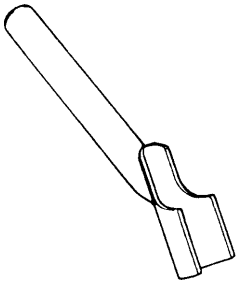 09922-46010 Bush remover	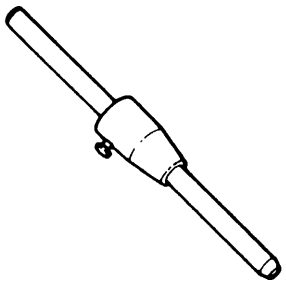 09923-36320 Clutch center guide	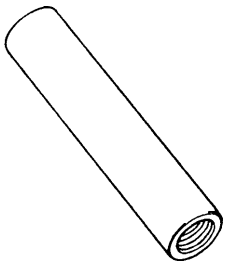 09923-46020 Joint pipe
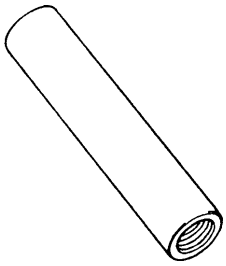 09923-46030 Joint pipe	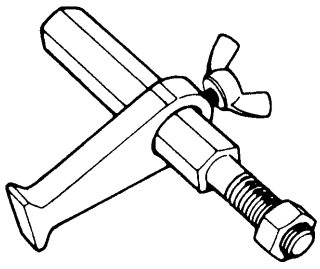 09924-17810 Flywheel holder	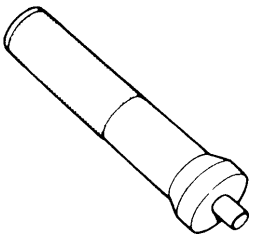 09925-98210 Input shaft bearing installer	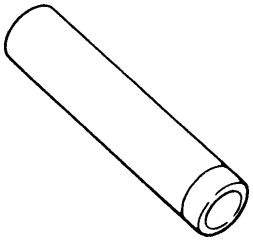 09925-98221 Bearing installer

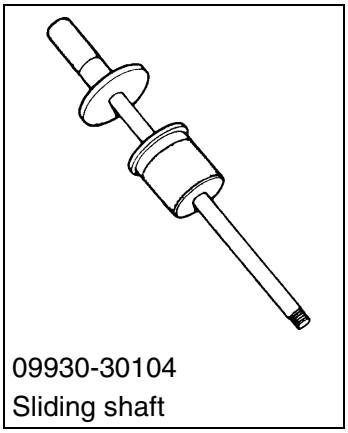

09930-30104
Sliding shaft

SECTION 7D

TRANSFER

CONTENTS

GENERAL DESCRIPTION 7D-2
DIAGNOSIS 7D-2
ON-VEHICLE SERVICE 7D-3
UNIT REPAIR OVERHAUL 7D-4
UNIT DISMOUNTING 7D-5
UNIT DISASSEMBLY 7D-6
TRANSFER ASSEMBLY 7D-6
REDUCTION DRIVEN GEAR 7D-7
INTERMEDIATE SHAFT 7D-8
TRANSFER OUTPUT RETAINER 7D-9
COMPONENT INSPECTION 7D-10
UNIT ASSEMBLY 7D-10
REDUCTION DRIVEN GEAR 7D-10
BEVEL GEAR SHIM 7D-11
TRANSFER OUTPUT RETAINER 7D-12
RIGHT CASE 7D-16
LEFT CASE 7D-17
TRANSFER ASSEMBLY 7D-17
BEVEL GEAR BACK LASH 7D-18
UNIT INSTALLATION 7D-20
TIGHTENING TORQUE SPECIFICATION 7D-22
REQUIRED SERVICE MATERIAL 7D-22
SPECIAL TOOL 7D-22

GENERAL DESCRIPTION

The transfer consists of parts as shown in figure.

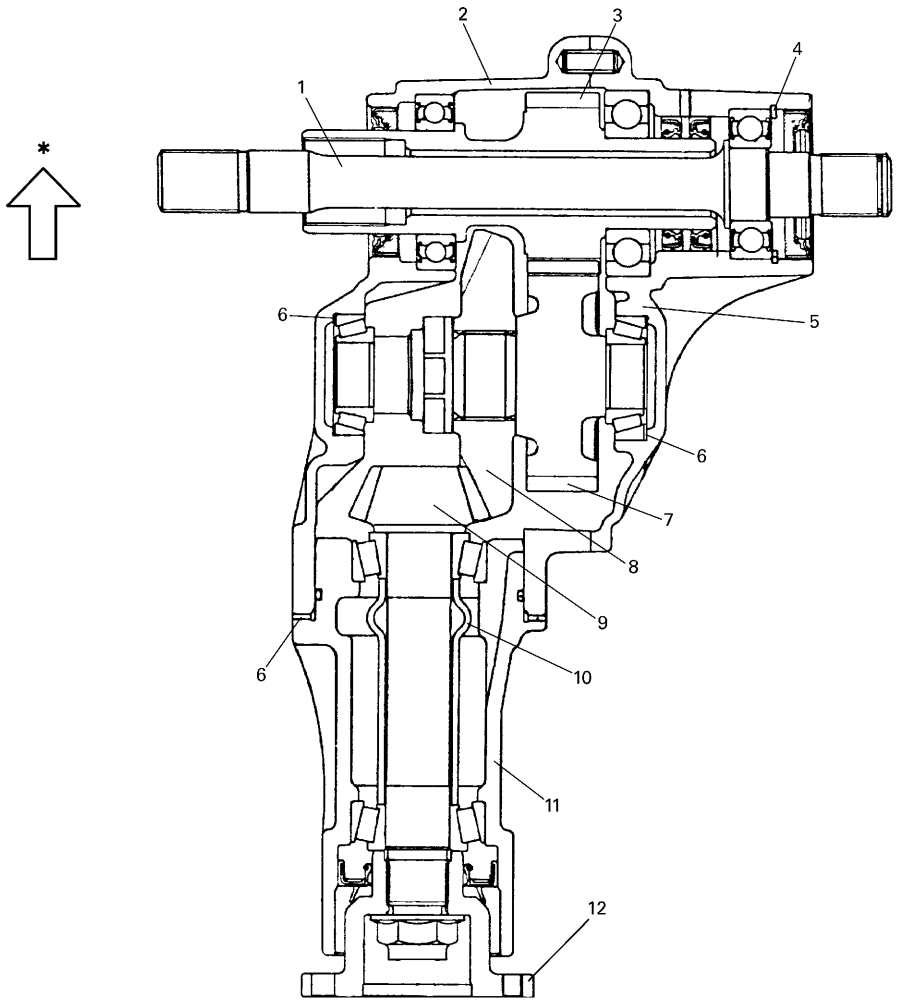

1. Intermediate shaft	6. Shim	11. Transfer output retainer
2. Left case	7. Reduction driven gear	12. Flange
3. Reduction drive gear	8. Bevel gear	✱: Forward
4. Circlip	9. Bevel pinion shaft	
5. Right case	10. Pinion shaft spacer	

DIAGNOSIS

Condition	Possible Cause	Correction
Noise	Inadequate or insufficient lubricant	Replenish.
	Damaged or worn bearing(s)	Replace.
	Damaged or worn gear(s)	Replace.
	Damaged or worn chamfered tooth on sleeve or gear	Replace.
	Preload of taper roller bearing is reduced	Adjust.

ON-VEHICLE SERVICE

OIL CHANGE

1) Before changing or inspecting oil, be sure to stop engine and lift vehicle horizontally.

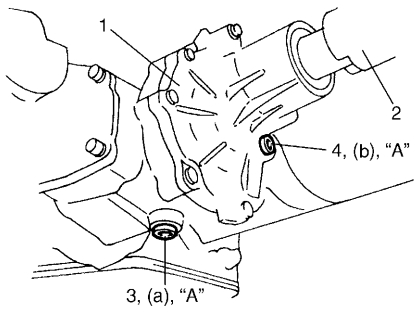

2) With vehicle lifted up, check oil level and leakage. If leakage exists, correct or repair it.
3) Drain old oil, tighten drain plug (3) after applying sealant to its thread and fill new specified oil as shown below by specified amount (roughly up to level hole).

"A" : Sealant 99000-31230

Tightening torque
Transfer oil drain plug (a) : 21 N·m (2.1 kg-m, 15.5 lb-ft)

NOTE:

- **It is highly recommended to use SAE 80W-90 Hypoid gear oil API GL-5.**
- **Whenever vehicle is hoisted for any other service work than oil change, also be sure to check for oil leakage.**

Viscosity chart SAE

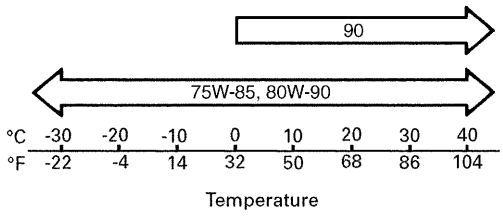

Transfer gear oil
:Hypoid gear oil API GL-5
For oil viscosity, refer to the chart.

Oil Capacity
: 0.5 liters (1.1/0.9 US/Imp. pt)

4) Torque level/filler plug (4) as specified below after applying sealant to its thread.

"A" : Sealant 99000-31230

Tightening torque
Transfer oil level / filler plug
(b) : 21 N·m (2.1 kg-m, 15.5 lb-ft)

1. Transfer
2. Drive shaft

UNIT REPAIR OVERHAUL

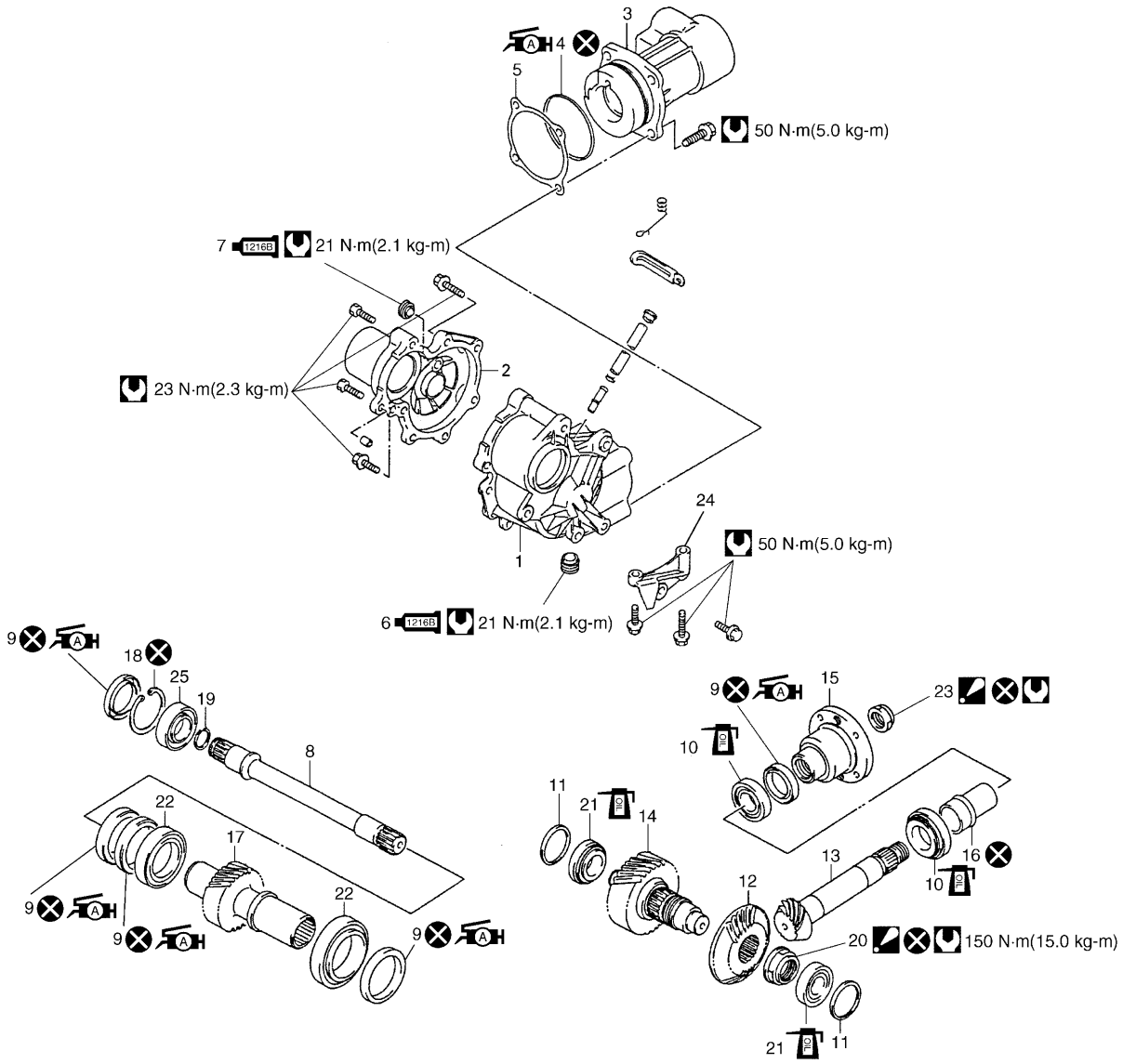

	1.	Transfer left case	11.	Bevel gear shim	21. Driven gear bearing
	2.	Transfer right case	12.	Bevel gear (Hypoid gear)	22. Reduction drive gear bearing
	3.	Transfer output retainer	13.	Bevel pinion shaft (Hypoid gear)	23. Flange nut : After tightening nut so as rotation torque of bevel pinion shaft to be in specified value, caulk nut securely.
A	4.	O-ring : Apply grease 99000-25010 to all around surface	14.	Reduction driven gear	24. Stiffener
	5.	Bevel pinion shim	15.	Flange	25. Intermediate right bearing
1216B	6.	Drain plug : Apply sealant 99000-31230 to all around thread part of drain plug	16.	Pinion shaft spacer	Do not reuse.
1216B	7.	Level plug : Apply sealant 99000-31230 to all around thread part of level plug	17.	Reduction drive gear	Tightening torque
	8.	Intermediate shaft	18.	Circlip	Apply transfer oil.
A	9.	Oil seal : Apply SUZUKI SUPER GREASE A 99000-25010 to oil seal lip.	19.	Snap ring	
	10.	Pinion shaft bearing		20. Bevel gear nut : After tightening nut to specified torque, caulk nut securely	

UNIT DISMOUNTING

1) Disconnect negative cable at battery.
2) Hoist vehicle and remove wheels.
3) Drain transmission oil.

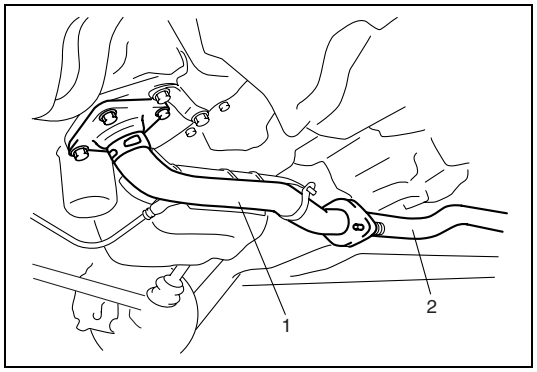

4) Remove exhaust No.1 pipe (1).
5) Remove propeller shaft.

2. Exhaust No.2 pipe

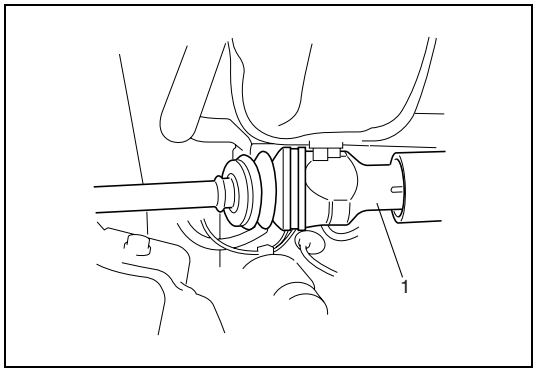

6) Remove right side drive shaft (1) refer to Section 4A.

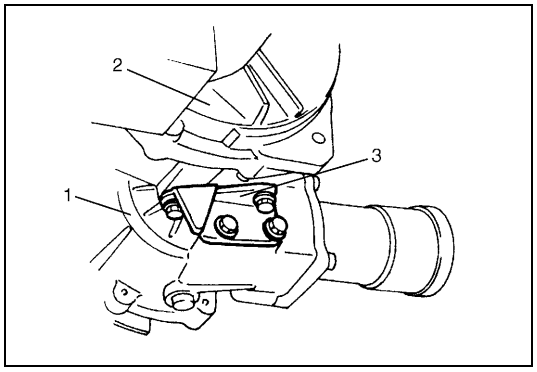

7) Remove Stiffener (3).

1. Transfer
2. Transmission

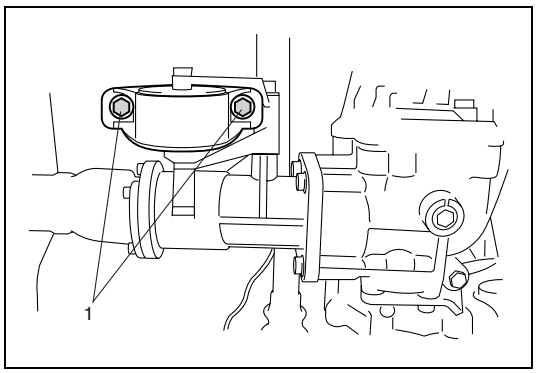

8) With transmission assembly held on jack, remove rear mounting bolts (1).

9) Remove transfer mounting bolts and draw out transfer assembly from transmission assembly.

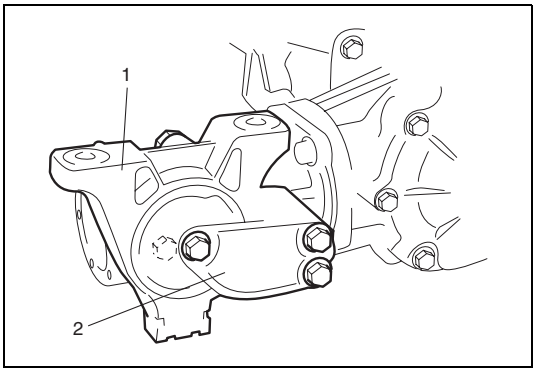

10) Remove mounting (1) and mounting bracket (2) from transfer assembly.

UNIT DISASSEMBLY

TRANSFER ASSEMBLY

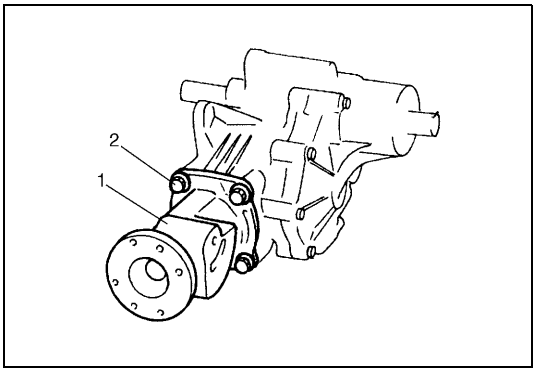

1) Remove retainer bolts (2) and remove transfer output retainer (1).

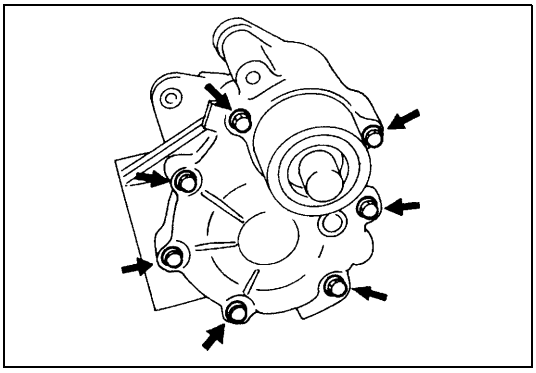

2) Remove transfer case bolts.

3) Separate right case with intermediate shaft from left case by tapping with plastic hammer.

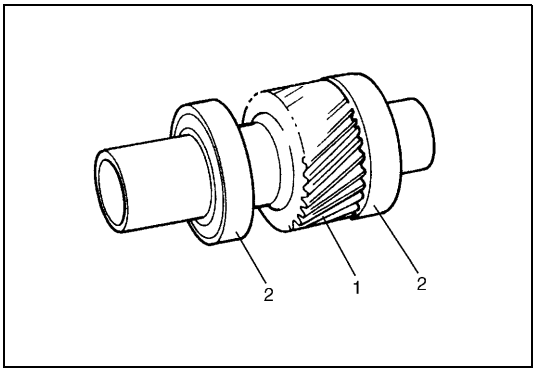

4) Remove reduction drive gear (1) from left case by tapping with plastic hammer.

2. Bearing

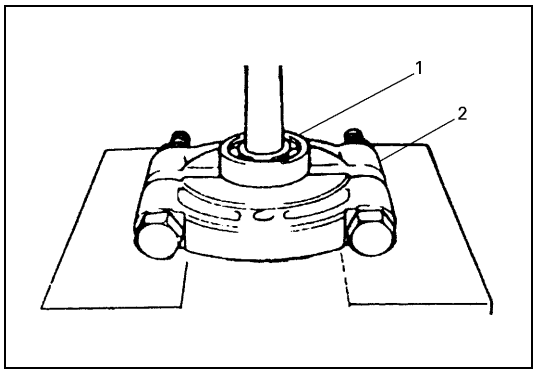

5) Remove drive gear bearings (1) (right and left) from reduction drive gear by using bearing puller (2).

REDUCTION DRIVEN GEAR

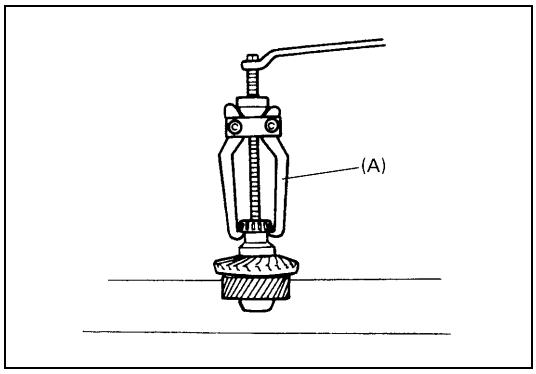

1) Drive out left side driven gear bearing by using special tool.

Special tool
(A) : 09913-65135

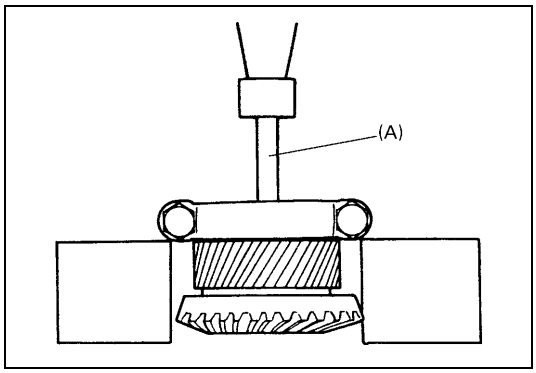

2) Drive out right side driven gear bearing by using bearing puller, press and special tool.

Special tool
(A) : 09925-58210

3) Uncaulk bevel gear nut, remove bevel gear nut while holding bevel gear with soft jawed vise.

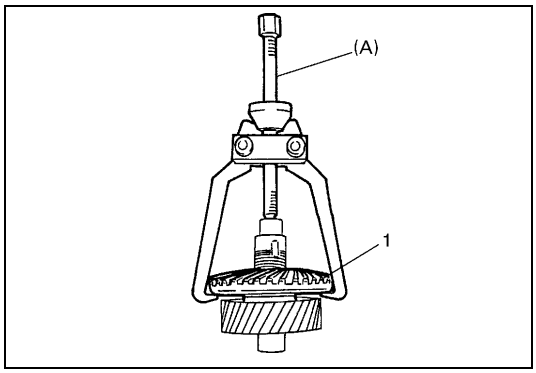

4) Drive out bevel gear (1) by using special tool.

Special tool
(A) : 09913-65135

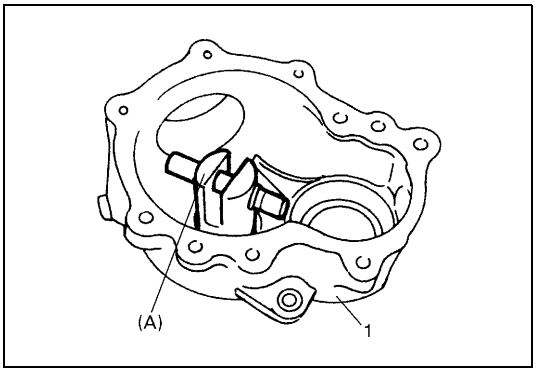

5) Remove driven gear bearing outer race from left case (1) by using special tool.

Special tool
(A) : 09941-54911

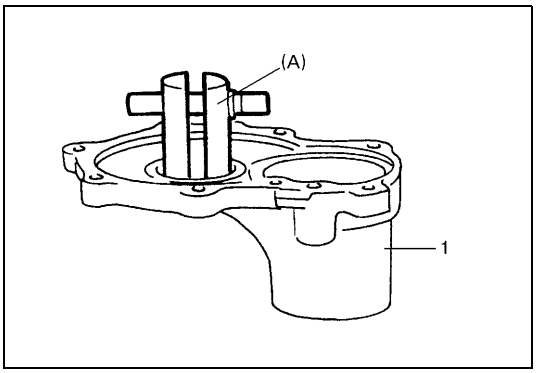

6) Remove driven gear bearing outer race from right case (1) by using special tool.

Special tool
(A) : 09941-54911

INTERMEDIATE SHAFT

1) Remove reduction drive oil seal and snap ring, and then drive out intermediate shaft.

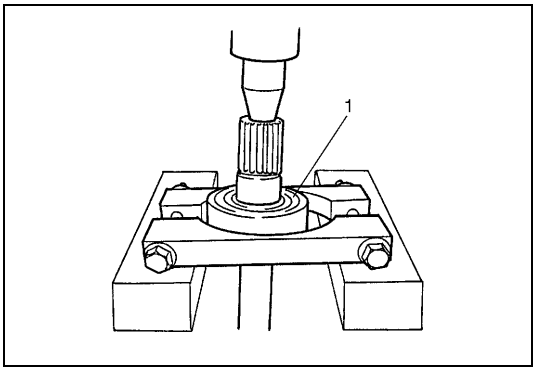

2) Drive out intermediate right bearing (1) from intermediate shaft by using bearing puller and press.

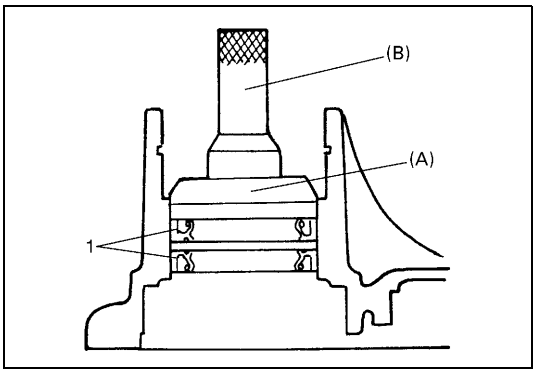

3) Remove intermediate center oil seals (1) by using press and special tools.

Special tool
(A) : 09924-84510-005
(B) : 09913-75821

TRANSFER OUTPUT RETAINER

1) Uncaulk flange nut.

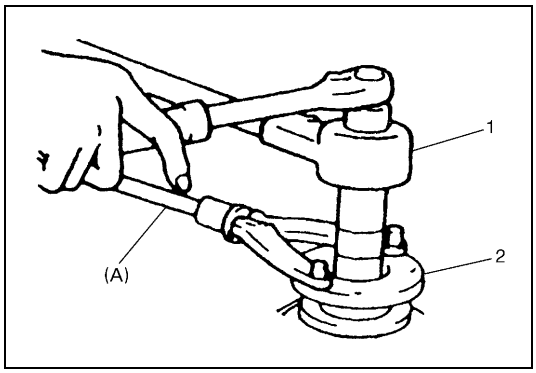

2) Remove flange nut while holding flange (2) by using special tool.

Special tool
(A) : 09930-40113

1. Power wrench

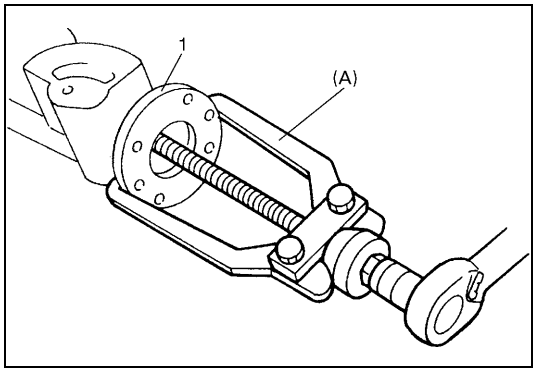

3) Remove flange (1) by special tool.

Special tool
(A) : 09913-65135

4) Drive out bevel pinion shaft from transfer output retainer by tapping with plastic hammer.
5) Drive out pinion spacer from bevel pinion shaft.

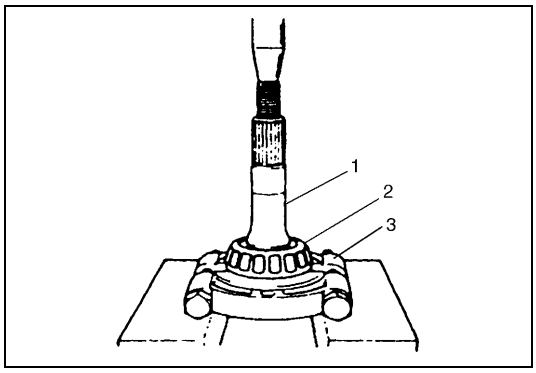

6) Drive out pinion shaft bearing (2) from bevel pinion shaft (1) by using press.

3. Bearing puller

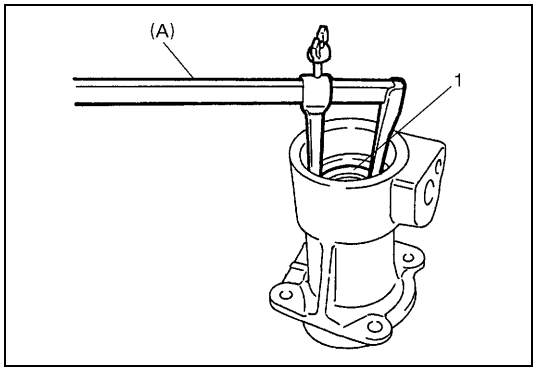

7) Remove pinion shaft oil seal (1) by using special tool.

Special tool
(A) : 09913-50121

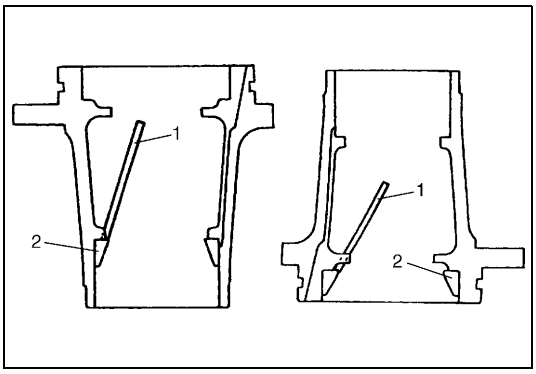

8) Drive out pinion shaft bearing outer races (2) (front and rear) by using brass bar (1).

COMPONENT INSPECTION

- Check each bearing for smooth rotation, wear or discoloration.
  If found abnormal, replace.
- Check oil seal for leakage and its lip for excessive hardness. If either is found, replace.
- Check transfer case for cracks.
- Check bevel pinion and bevel gear for wear or cracks.
- Check pinion gear and pinon shaft for wear or damage.

UNIT ASSEMBLY

Judging from faulty conditions noted before disassembly and what is found through visual check of bearing and gear tooth etc. after disassembly, prepare replacing parts and proceed to reassembly according to procedures as described below.

CAUTION:
- **Bevel gear and pinion must be replaced as a set when either replacement becomes necessary.**
- **When replacing taper roller bearing, replace as inner race & outer race assembly.**

REDUCTION DRIVEN GEAR

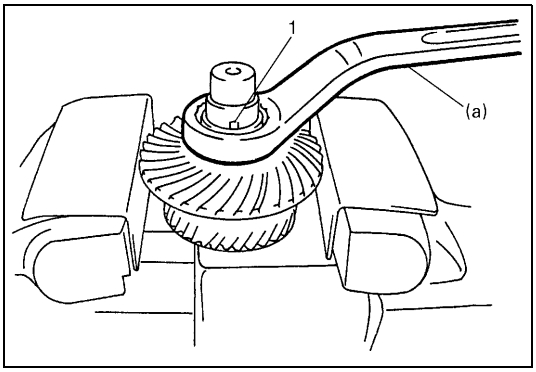

1) Drive in bevel gear to reduction driven gear.
2) Tighten bevel gear nut to specified torque while holding bevel gear with soft jawed vise and caulk (1) nut.

Tightening torque
Transfer bevel gear nut
(a) : 150 N·m (15.0 kg-m, 108.5 lb-ft)

BEVEL GEAR SHIM

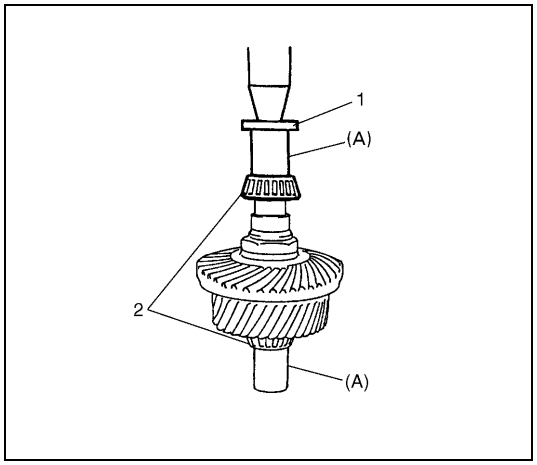

- Press-fit driven gear bearings (2) (right and left) to driven gear by using special tools.

Special tool
(A) : 09945-16070

NOTE:

Support shaft with special tool as illustrated in the figure so that retainer of bearing cone will be free from compression.

1. Plate

ADJUSTMENT

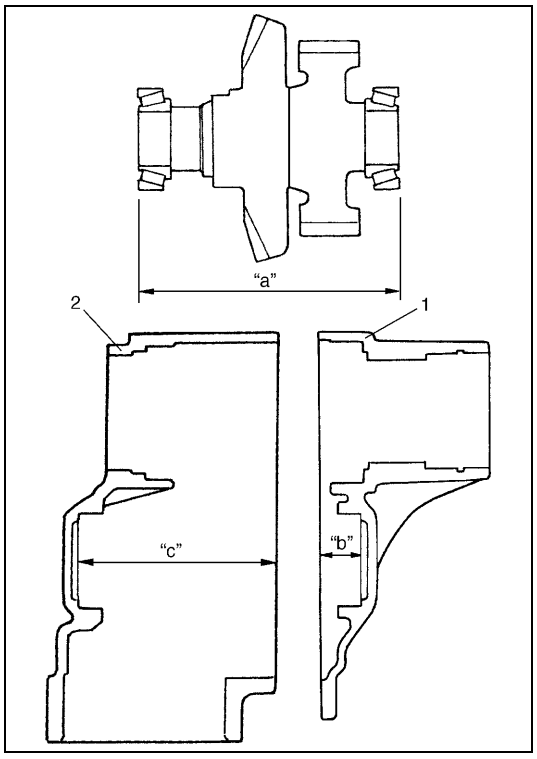

- Check clearance between driven gear bearing and case.
  If the clearance is out of specification, adjust it by using shim(s) according to following procedure.
- Install driven gear bearing outer races, take measurement of distance "a" between end faces of driven gear bearing outer races.
- Measure depth "b" and "c" from mating face of right (left) case (to match with left (right) case) to face processed for installation of driven gear bearing.
- Calculate shim thickness to be inserted.
  Shim thickness = {"b" + "c" – "a" + 0.1 mm (0.004 in.)}/2
- Select shim(s) closest to calculated value.

Available shims thickness
: 0.60, 0.65, 0.70, 0.75, 0.8, 0.85, 0.90, 0.95, 1.00 and 1.05 mm (0.024, 0.026, 0.028, 0.030, 0.031, 0.033, 0.035, 0.037, 0.040, and 0.041 in.)

1. Right case
2. Left case

TRANSFER OUTPUT RETAINER

ADJUSTMENT

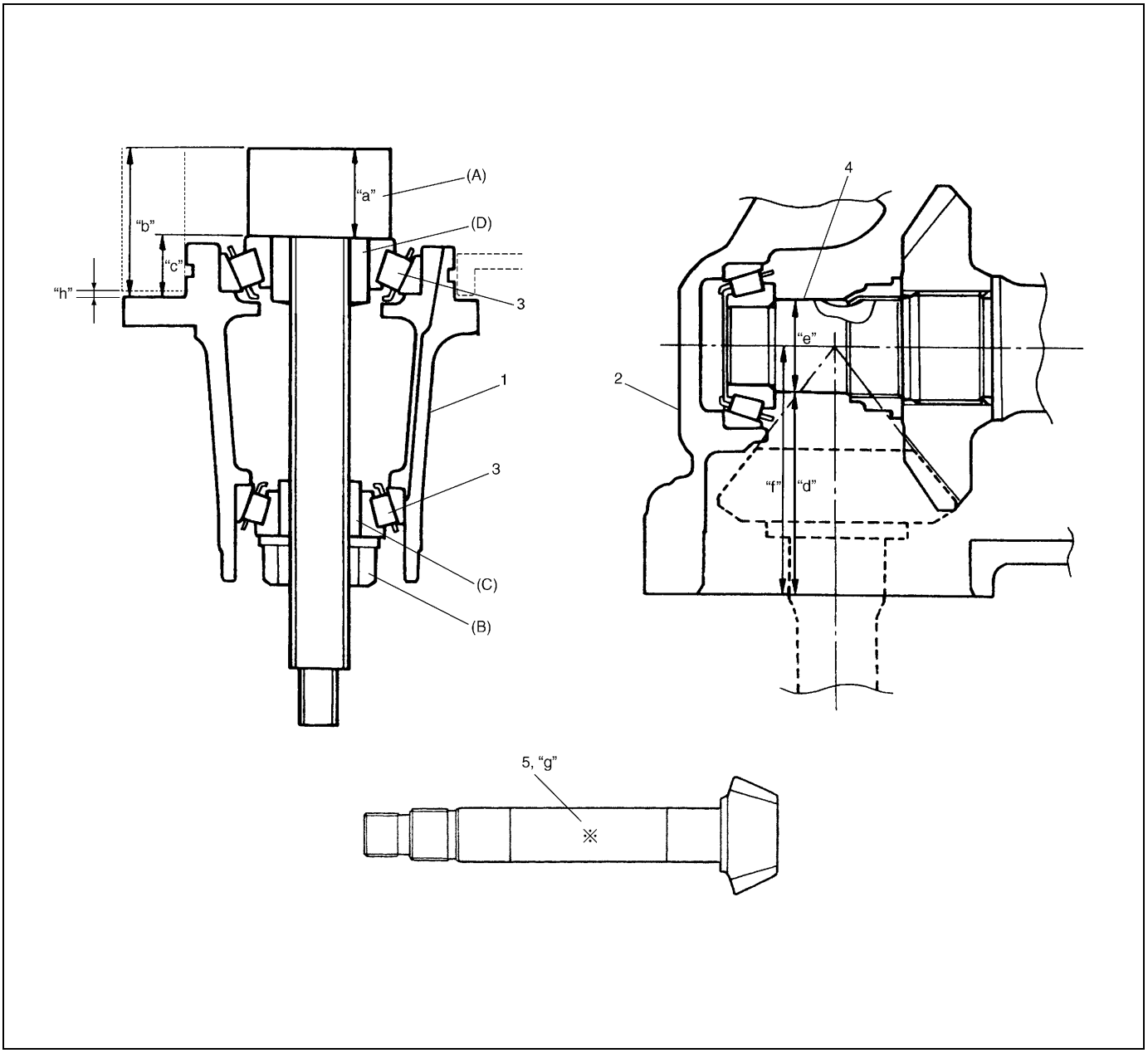

"a": Pinion dummy (special tool) height	1. Transfer output retainer
"b": Height from retainer installation face to pinion dummy	2. Left case
"c": Distance from retainer installation face to end face of bearing race ("b" – "a")	3. Pinion shaft bearing
"d": Distance from end face of left case to cylinder section of reduction driven gear	4. Reduction driven gear
"e": Outer diameter of cylinder section of reduction driven gear (29.7 mm/1.1693 in.)	5. Bevel pinion shaft
"f": Distance from end face of left case to center shaft of reduction driven gear ("d" + "e"/2)	
"g": Dimension marked on bevel pinion shaft (Marked in shaft in mm)	
"h": Shim size for mounting distance adjustment ("g" + "c" – "f")	

Special tool

(A) : 09922-76140

(B) : 09922-76150

(C) : 09922-76340

(D) : 09922-76430

To engage bevel pinion and gear correctly, it is prerequired to install bevel pinion to transfer output retainer properly by using adjusting shim (bevel pinion shim) as described on following pages.
Shown in above page are relative positions of bevel pinion, gear and transfer output retainer.

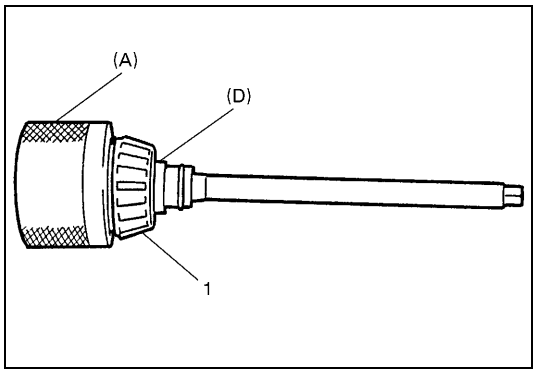

- Install pinion shaft bearing (1) (front side) to bevel pinion dummy (special tools, refer to previous page).

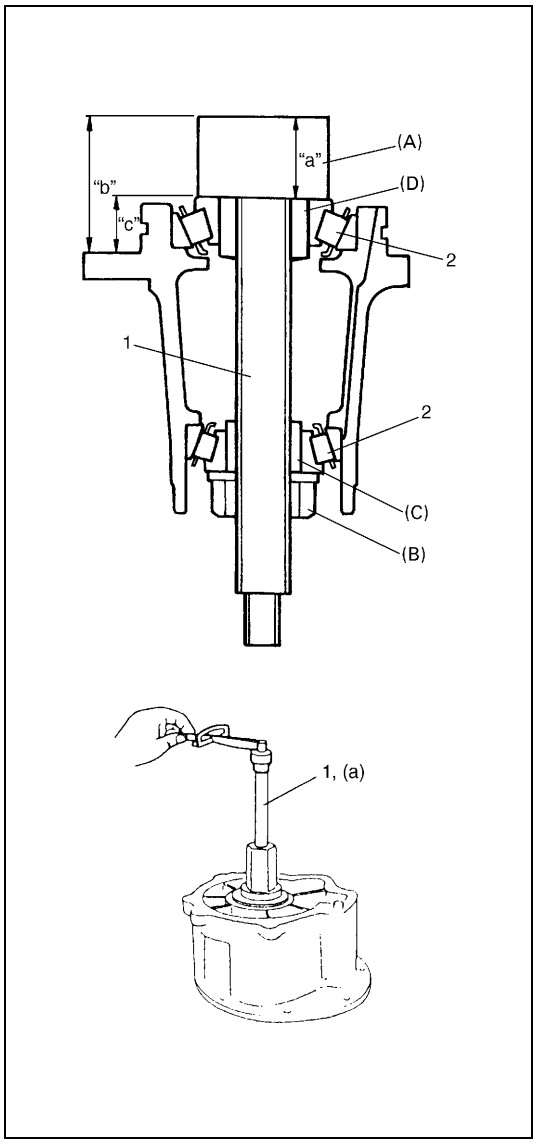

- Install bevel pinion dummy (1), pinion shaft bearing (2) (rear side) and special tool (A) by using special tool (B) to transfer output retainer (refer to previous page for special tool number).

Special tool
(A) : 09922-76140
(B) : 09922-76150
(C) : 09922-76340
(D) : 09922-76430

NOTE:

This installation requires no spacer or oil seal.

- Tighten bevel pinion nut (special tool) so that specified bearing preload is obtained.

NOTE:

Before taking measurement, check for rotation by hand more than 15 revolutions.

Pinion shaft bearing preload
(a) : 5.0 – 13.0 kg-cm (4.4 – 11.2 lb-ft)

- Measure height "b" in figure by using vernier caliper. Calculate "c" by using measured value.

Distance "c"	=	Height "b"	–	Height "a"

"c": Distance from retainer installation face to end face of bearing race
"b": Height from retainer installation face to pinion dummy
"a": Pinion dummy height

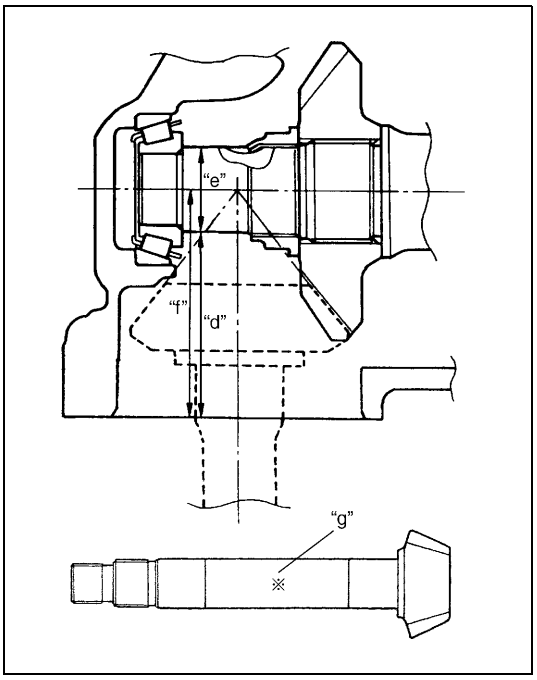

- Install reduction driven gear to left case and right case and then measure distance "d" as indicated in figure.
  Calculate "f" by using measured value.

Distance "f"	=	Distance "d"	+	14.85 mm (0.5846 in.) ("e"/2)

- Obtain adjusting shim thickness by using calculated value in following equation.

Necessary shim thickness "h"	=	Dimension "g"	+	Distance "c"	–	Distance "f"

"f":	Distance from end face of left case to center shaft of reduction driven gear
"d":	Distance from end face of left case to cylinder section of reduction driven gear
"g":	Dimension marked on bevel pinion shaft

- Select adjusting shim closest to calculated value from among following available sizes.

Available shims thickness
: 0.30, 2.00, 2.03, 2.06, 2.09, 2.12, 2.15, 2.18, 2.21, 2.24 and 2.27 mm (0.012, 0.079, 0.080, 0.081, 0.082, 0.083, 0.085, 0.086, 0.087, 0.088 and 0.089 in.)

ASSEMBLY

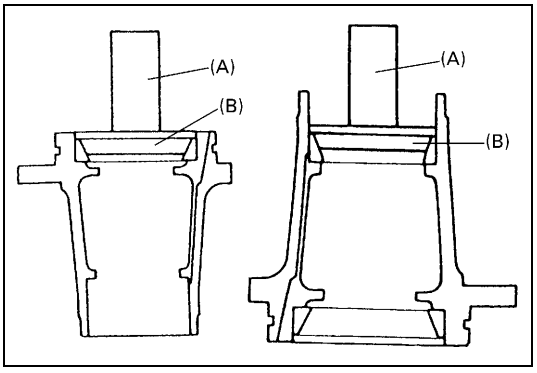

1) Press-fit pinion shaft bearing outer races (front and rear) by using special tools.

Special tool
(A) : 09913-75821
(B) : 09924-84510-005

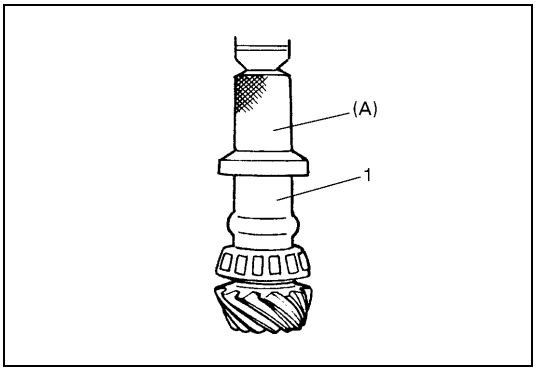

2) Press-fit pinion shaft bearing (front side) by using special tool, press and pinion shaft spacer (1) removed in procedure UNIT DISASSEMBLY TRANSFER OUTPUT RETAINER.

Special tool
(A) : 09913-75810

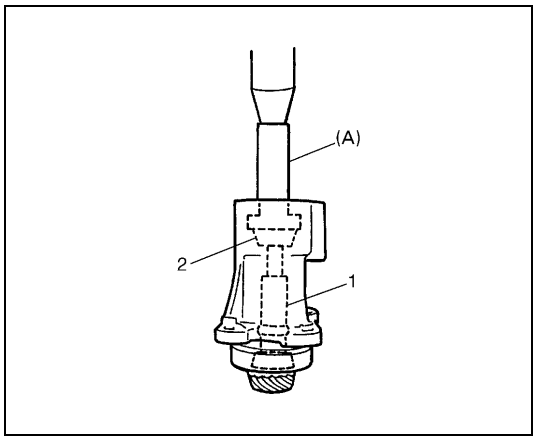

3) Install bevel pinion shaft with new pinion shaft spacer (1) to transfer output retainer.
4) Press-fit pinion shaft bearing (rear side) (2) by using special tool (and press).

Special tool
(A) : 09913-75810

CAUTION:
Press-fit bearing to such an extent that spacer is not compressed.

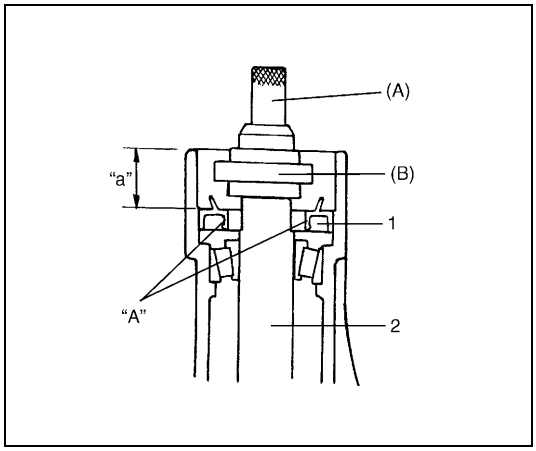

5) Drive in oil seal (1) by using special tools and apply grease to oil seal lip.

Special tool
(A) : 09913-75810
(B) : 09951-16090

"A" : Grease 99000-25010

Transfer bevel pinion shaft oil seal installing depth
"a" : 27.0 – 27.5 mm (1.063 – 1.083 in.)

2. Bevel pinion shaft

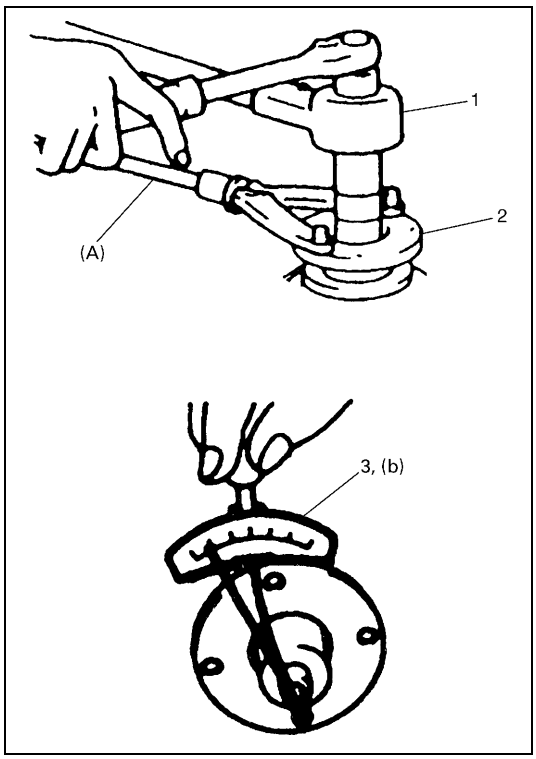

6) Install flange (2) and tighten flange nut gradually so as rotation torque of bevel pinion shaft to be in specified value.

NOTE:

- **If rotation torque of bevel pinion shaft exceeds specification given below, replace pinion shaft spacer and tighten flange nut.**
- **Before taking measurement of rotation torque, rotate pinion shaft over ten rounds in advance.**

Special tool
(A) : 09930-40113

Rotation torque for bevel pinion shaft
(b) : 0.5 – 1.3 N·m (0.05 – 0.13 kg-m, 0.30 – 0.90 lb-ft)

1. Power wrench
3. Torque wrench

7) Caulk flange nut.

RIGHT CASE

1) Press-fit intermediate right bearing to intermediate shaft.

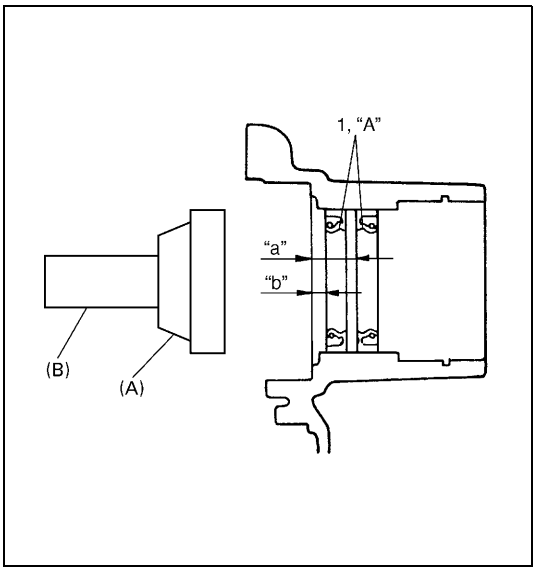

2) Install intermediate center oil seals (1) to case by using special tool and apply grease to oil seal lip.

CAUTION:
Use care the installation direction and depth of oil seals for correct installation.

Special tool
(A) : 09924-84510-005
(B) : 09913-75821

"A" : Grease 99000-25010

Transfer intermediate center oil seals installing depth
"a" : 16.0 – 16.5 mm (0.630 – 0.650 in.)
"b" : 4.0 – 4.5 mm (0.157 – 0.177 in.)

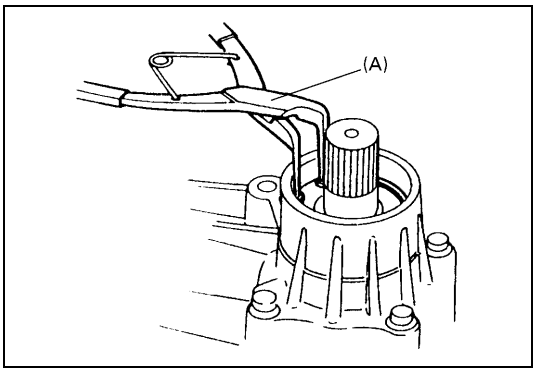

3) Install intermediate shaft to right case, and install snap ring.

Special tool
(A) : 09952-76011

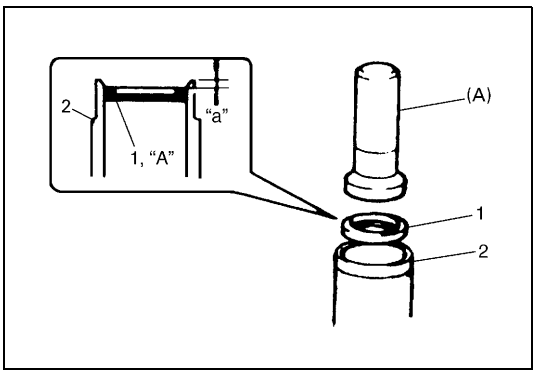

4) Install right case oil seal (1) to right case (2).

Special tool
(A) : 09913-75810

Transfer right case oil seal installing depth
"a" : 1.0 – 1.5 mm (0.039 – 0.059 in.)

5) Fill grease to inside of oil seal about 3 g (0.11 oz), and apply grease to oil seal lip.

"A" : Grease 99000-25010

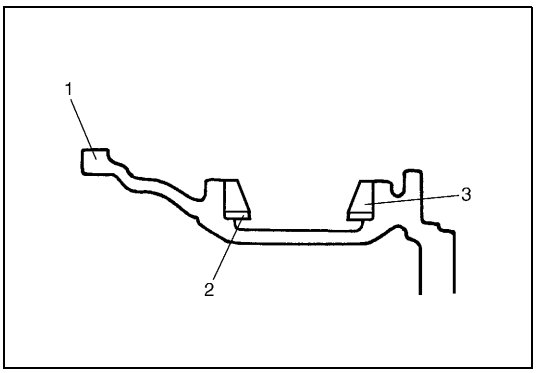

6) Install bevel gear shim(s) (2) selected in item BEVEL GEAR SHIM ADJUSTMENT and driven gear bearing outer race (3) to right case (1).

LEFT CASE

1) Install the bevel gear shim(s) selected in item BEVEL GEAR SHIM ADJUSTMENT and driven gear bearing outer race to left case.

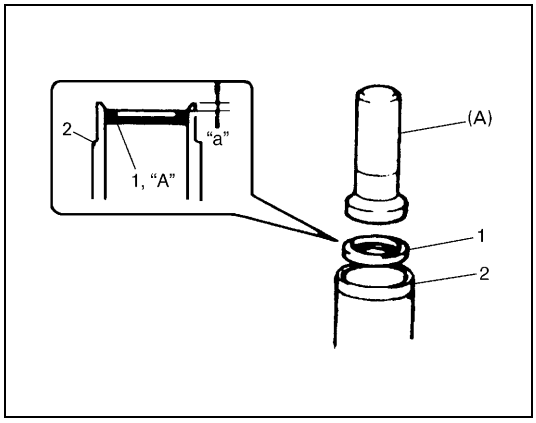

2) Install reduction drive gear oil seal (1) to left case (2) by using special tool.

Special tool
(A) : 09913-75810

Transfer reduction drive gear oil seal installing depth
"a" : 1.5 – 2.0 mm (0.059 – 0.078 in.)

3) Fill grease to inside of oil seal about 3 g (0.11 oz), and apply grease to oil seal lip.

"A" : Grease 99000-25010

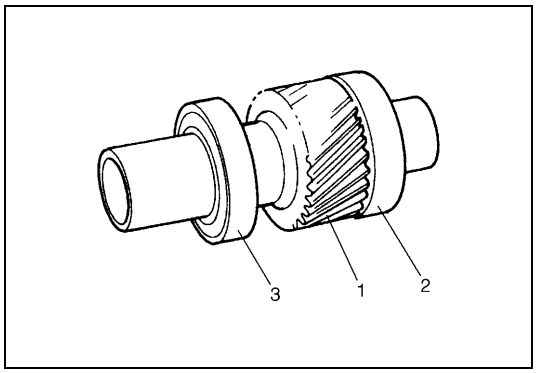

4) Press-fit drive gear bearings (right (2) and left (3)) to reduction drive gear (1).
Apply gear oil to ball part of bearing.

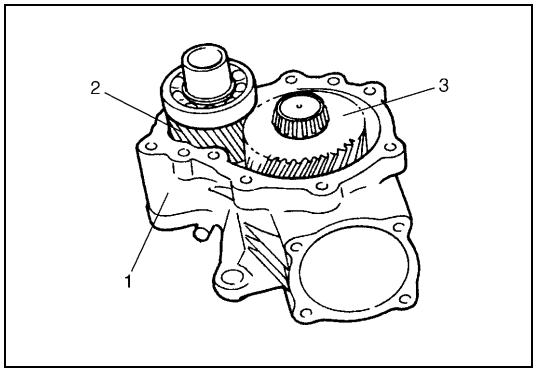

5) Install reduction drive gear (2) and reduction driven gear (3) to left case (1).

TRANSFER ASSEMBLY

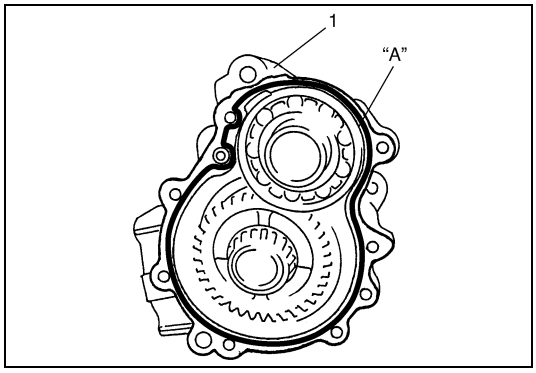

1) Clean mating surface of right case and left case (1), and apply sealant to left case (1) by using a nozzle as shown in figure by such amount that its section is 1.5mm (0.059 in) in diameter.

"A" : Sealant 99000-31230

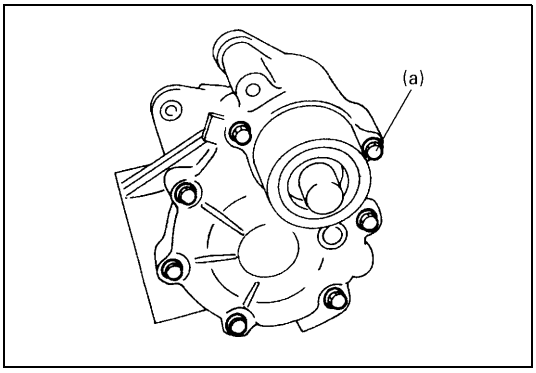

2) Tighten transfer case bolts to specified torque.

Tightening torque
Transfer case bolts (a) : 23 N·m (2.3 kg-m, 17.0 lb-ft)

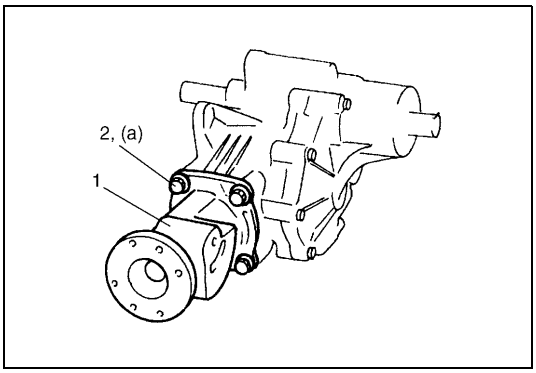

3) Install the bevel pinion shim(s) selected in preceding procedure (TRANSFER OUTPUT RETAINER ADJUSTMENT), install transfer output retainer (1) to transfer case and then tighten retainer bolts (2) to specified torque.

Tightening torque
Transfer output retainer bolts
(a) : 50 N·m (5.0 kg-m, 36.5 lb-ft)

BEVEL GEAR BACK LASH

MEASUREMENT

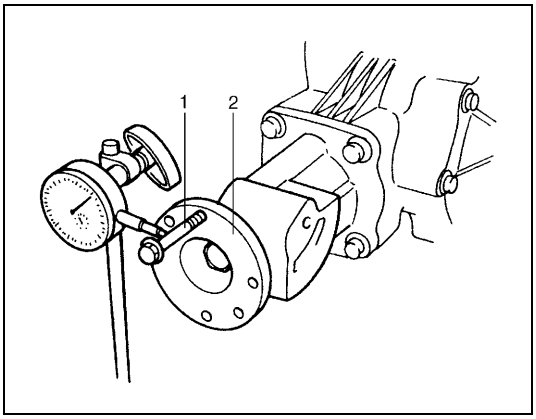

1) Install bolt to bolt hole of flange (2), set dial gauge measuring tip at right angles to bolt (1) as shown in figure.
Take measurement backlash of pinion and bevel gear.

NOTE:

If backlash exceeds specification given below, replace bevel pinion shim (between transfer case and transfer output retainer) and measure backlash again.

Transfer pinion & bevel gear backlash
: 0.1 – 0.2 mm (0.0039 – 0.0078 in.)

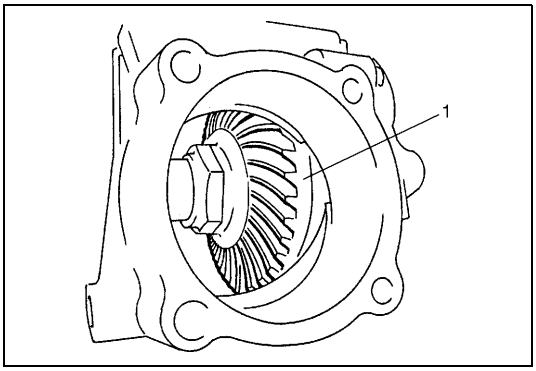

2) As final step, check gear tooth contact as follows.
a) After cleaning tooth surface of bevel gear (1), paint them with gear marking compound evenly by using brush or sponge etc.

NOTE:

When applying red lead paste to teeth, be sure to paint tooth surfaces uniformly. The paste must not be too dry or too fluid.

b) Turn gear to bring its painted part in mesh with bevel pinion and turn it back and forth by hand to repeat their contact.
c) Bring painted part up and check contact pattern, referring to following chart.
If contact pattern is not normal, readjust or replace as necessary according to instruction in chart.

NOTE:

- **Be careful not to turn bevel gear more than one full revolution, for it will hinder accurate check.**
- **If bevel gear back lash and bevel pinion shims are adjusted properly, correct tooth contact should be provided.**
  If correct tooth contact is not provided even when they are adjusted properly, however, there may be an abnormal condition in worn tooth, transfer case or retainer. Check each component and replace as necessary.

TOOTH CONTACT PATTERN	DIAGNOSIS AND REMEDY
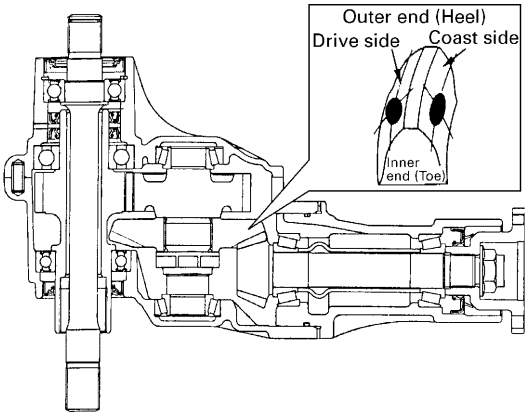	NORMAL
	HIGH CONTACT Pinion is positioned too fat from the center of drive bevel gear. 1) Decrease thickness of bevel pinion shim and position pinion closer to gear center. 2) Adjust drive bevel gear backlash to specification. 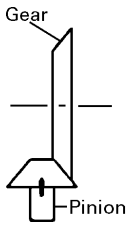
	LOW CONTACT Pinion is positioned too close to the center of drive bevel gear. 1) Increase thickness of bevel pinion shim and position pinion farther from gear center. 2) Adjust drive bevel gear backlash to specification. 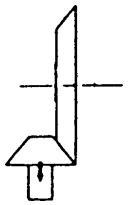

TOOTH CONTACT PATTERN	DIAGNOSIS AND REMEDY
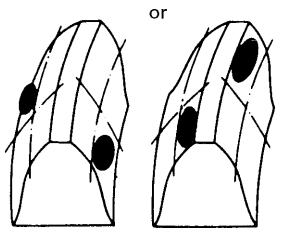	These contact patterns indicate that the “offset” of reduction driven gear is too much or too little. The remedy is to change the division of the bevel gear shim(s).
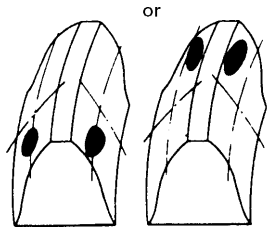	These contact patterns, located on toe or heel on both drive and coast sides, mean that 1) both pinion and gear are defective, 2) retainer is not true, or 3) gear is not properly seated on transfer case. The remedy is to replace the defective member.
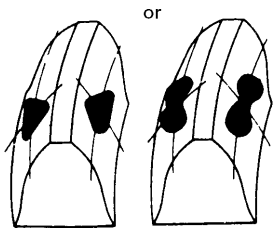	Irregular patterns: If the pattern is not oval, it means that bevel gear is defective. High or low spots on tooth surfaces or on the seat of bevel gear are the cause of irregular patterns appearing on some teeth. The remedy is to replace the pinion and gear set and, if the seat is defective, so is transfer case.

UNIT INSTALLATION

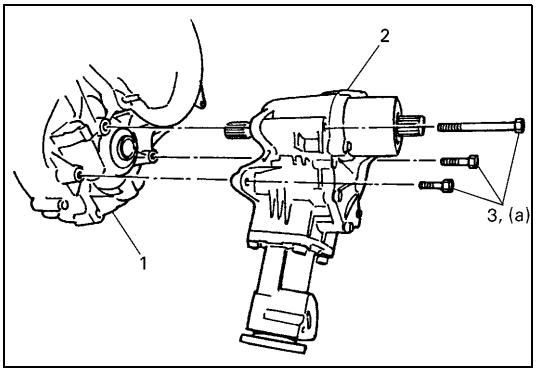

Install transfer assembly (2) by reversing removal procedure and noting following points.

- Tighten transfer mounting bolts (3) to specified torque.

Tightening torque
Transfer mounting bolts (a) : 50 N·m (5.0 kg-m, 36.5 lb-ft)

1. Transmission

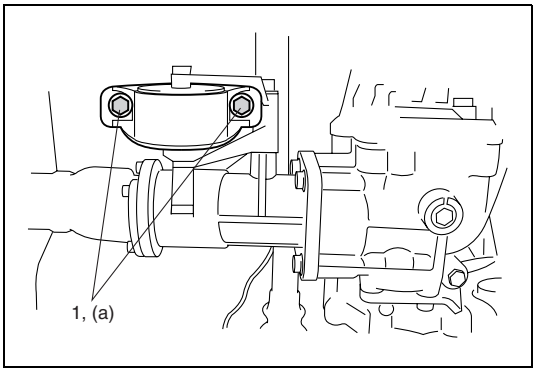

- Tighten rear mounting bracket bolts (1) to specified torque.

Tightening torque
Transfer rear mounting bracket bolts
(a) : 55 N·m (5.5 kg-m, 40.0 lb-ft)

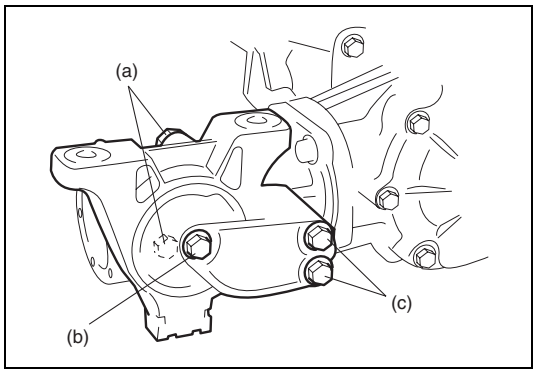

- Tighten mounting bolt and mounting bracket bolts and nuts to specified torque.

Tightening torque
Transfer rear mounting bracket nuts
(a) : 50 N·m (5.0 kg-m, 36.5 lb-ft)
Transfer mounting bolt
(b) : 55 N·m (5.5 kg-m, 40.0 lb-ft)
Transfer rear mounting bracket No.2 bolts
(c) : 55 N·m (5.5 kg-m, 40.0 lb-ft)

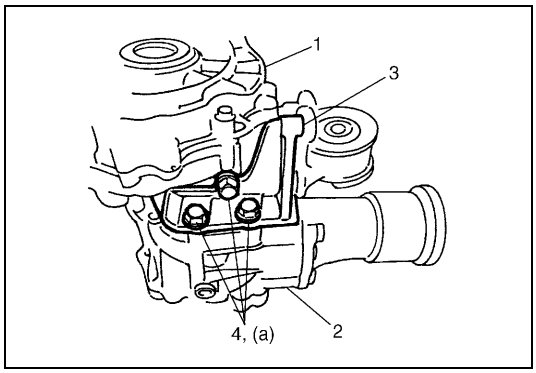

- Tighten transfer stiffener bolts (4) to specified torque.

Tightening torque
Transfer stiffener bolts (a) : 50 N·m (5.0 kg-m, 36.5 lb-ft)

1.	Transmission
2.	Transfer
3.	Stiffener

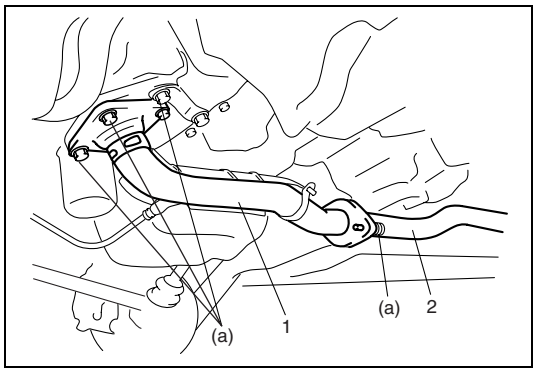

- Tighten exhaust pipe bolts.

Tightening torque
Exhaust pipe bolts
(a) : 50 N·m (5.0 kg-m, 36.5 lb-ft)

1.	Exhaust No.1 pipe
2.	Exhaust No.2 pipe

- Install right side drive shaft, refer to Section 4A.
- Install propeller shaft and tighten propeller shaft bolts and center support bolts to specified torque (refer to Section 4B).
- Fill gear oil to transfer as specified, refer to OIL CHANGE of ON-VEHICLE SERVICE.
  Check oil level and leakage.

TIGHTENING TORQUE SPECIFICATION

Fastening part	Tightening torque		
	N•m	kg-m	lb-ft
Transfer oil level/filler and drain plugs	21	2.1	15.5
Transfer bevel gear nut	150	15.0	108.5
Transfer case bolts	23	2.3	17.0
Transfer output retainer bolts	50	5.0	36.5
Transfer mounting bolts	50	5.0	36.5
Transfer rear mounting bracket bolts	55	5.5	40.0
Transfer rear mounting bracket nuts	50	5.5	36.5
Transfer mounting bolt	55	5.5	40.0
Transfer rear mounting bracket No.2 bolts	55	5.5	40.0
Transfer stiffener bolts	50	5.0	36.5
Exhaust pipe bolts	50	5.0	36.5

REQUIRED SERVICE MATERIAL

Material	Recommended SUZUKI products (Part Number)	Use
Lithium grease	SUZUKI SUPER GREASE A (99000-25010)	• Oil seal lips
Sealant	SUZUKI BOND NO. 1216B (99000-31230)	• Oil drain plug • Oil level plug • Mating surface of transfer case

SPECIAL TOOL

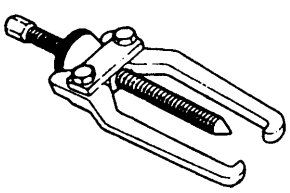	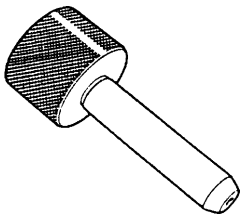	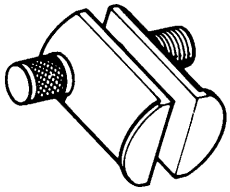	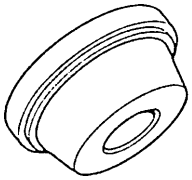
09913-65135 Bearing puller	09925-58210 Oil seal installer	09941-54911 Bearing outer race remover	09924-84510-005 Bearing installer attachment

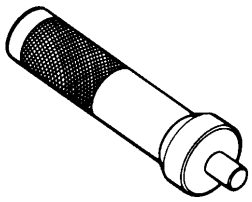 09913-75821 Bearing installer attachment	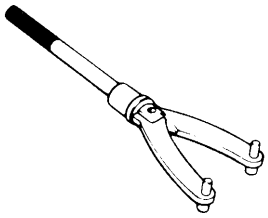 09930-40113 Rotor holder	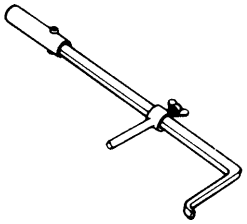 09913-50121 Oil seal remover	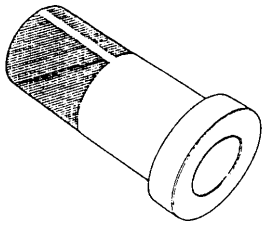 09913-75810 Bearing installer
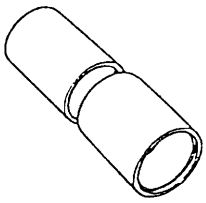 09945-16070 Retainer ring installer set	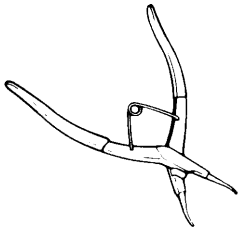 09952-76011 Snap ring pliers (closing type)	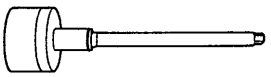 09922-76140 Bevel pinion shaft	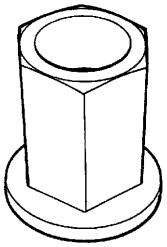 09922-76150 Bevel pinion nut
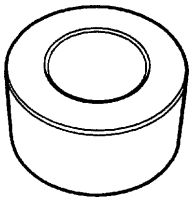 09922-76340 Rear collar	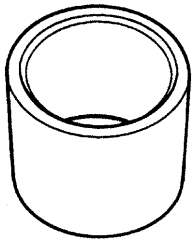 09922-76430 Front collar	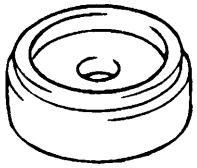 09951-16090 Oil seal installer	

SECTION 7F

REAR DIFFERENTIAL

CONTENTS

GENERAL DESCRIPTION 7F-2
VISCOUS COUPLING 7F-2
DIAGNOSIS 7F-3
ON-VEHICLE SERVICE 7F-4
OIL CHANGE 7F-4
UNIT REPAIR OVERHAUL 7F-5
DIFFERENTIAL UNIT 7F-6
UNIT DISASSEMBLY 7F-7
SUB-ASSEMBLY REPAIR..... 7F-8
VISCOUS COUPLING 7F-8
REAR DIFFERENTIAL..... 7F-10
UNIT ASSEMBLY 7F-20
TIGHTENING TORQUE SPECIFICATION..... 7F-20
REQUIRED SERVICE MATERIAL..... 7F-21
SPECIAL TOOL 7F-21

GENERAL DESCRIPTION

The differential assembly uses a hypoid bevel pinion and gear.
The differential assembly is decisive in that the drive power is concentrated there. Therefore, use of genuine parts and specified torque is compulsory. Further, because of sliding tooth meshing with high pressure between bevel pinion and gear, it is mandatory to lubricate them by hypoid gear oil.

VISCOUS COUPLING

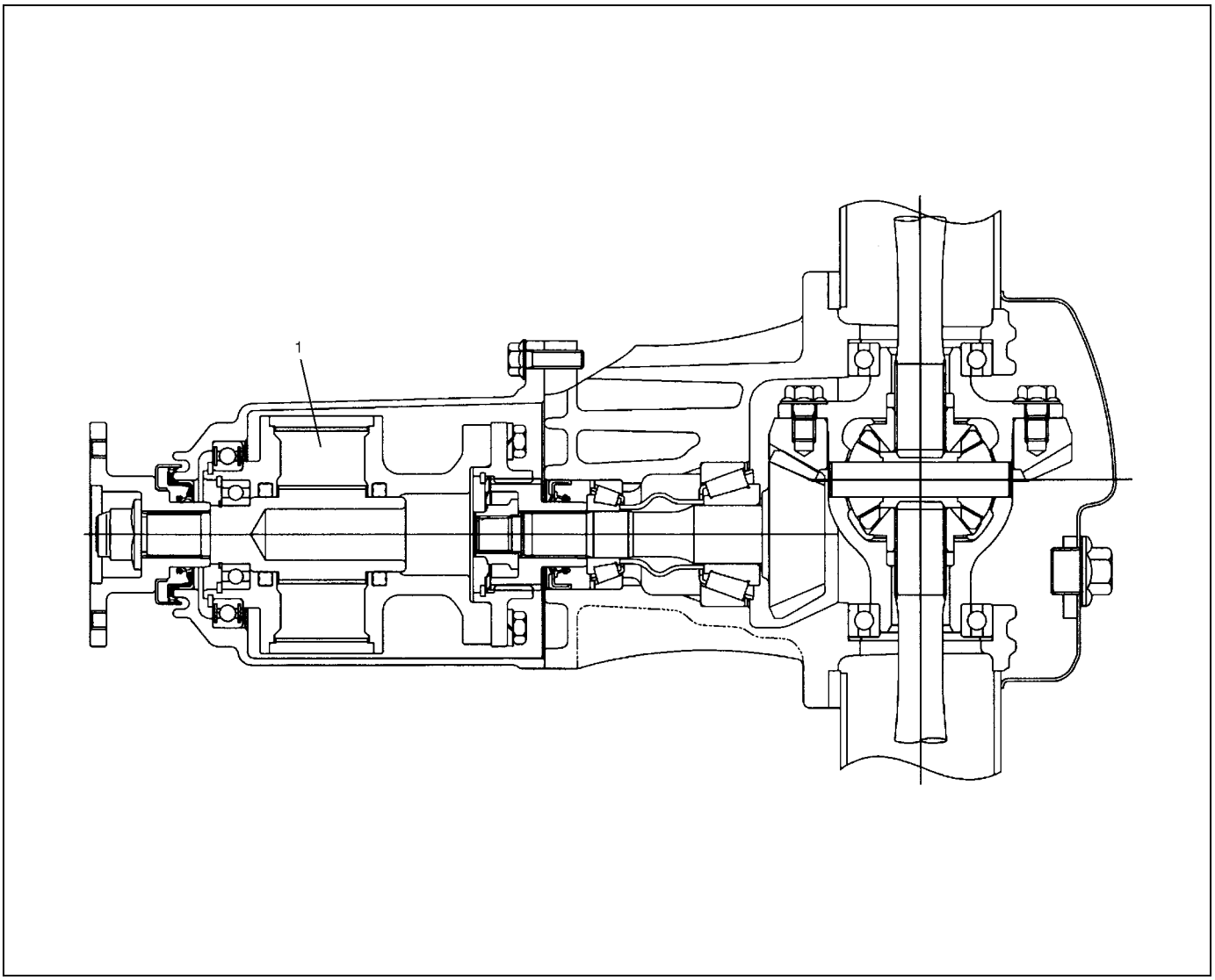

The 4WD vehicle is equipped with a viscous coupling (1) in front of the rear differential.
The 4WD mechanism used for this vehicle distributes optimum driving force to the front and rear wheels according to road conditions and driving conditions.

DIAGNOSIS

Condition	Possible Cause	Correction
Gear noise	Deteriorated or water mixed lubricant	Repair and replenish.
	Inadequate or insufficient lubricant	Repair and replenish.
	Maladjusted backlash between bevel pinion and gear	Adjust and prescribed.
	Improper tooth contact in the mesh between bevel pinion and gear	Adjust or replace.
	Loose bevel gear securing bolts	Replace or retighten.
	Damaged side gear(s) or side pinion(s)	Replace.
Bearing noise	(Constant noise) Deteriorated or water mixed lubricant	Repair or replenish.
	(Constant noise) Inadequate or insufficient lubricant	Repair or replenish.
	(Noise while coasting) Damaged bearing(s) of bevel pinion	Replace.
	(Noise while turning) Damaged differential side bearing(s)	Replace.
Oil leakage	Clogged breather plug	Clean.
	Worn or damaged oil seal	Replace.
	Excessive oil	Adjust oil level.

ON-VEHICLE SERVICE

OIL CHANGE

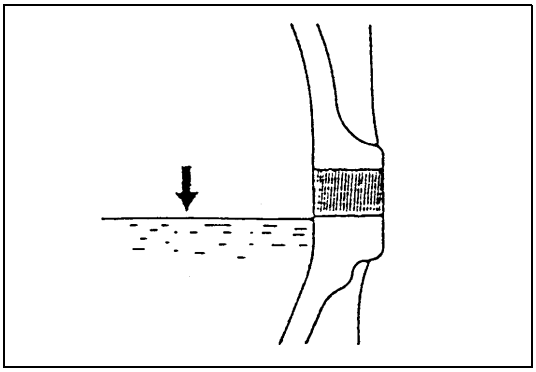

1) Before oil change or inspection, be sure to stop engine and set vehicle horizontally.
2) Check oil level and existence of leakage. If leakage is found, correct its cause.

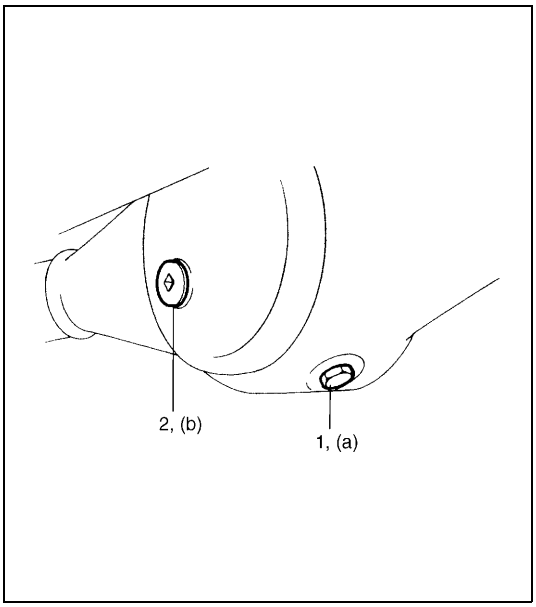

3) Remove level/filler plug (2) and drain plug (1), then drain old oil.
4) Install new gasket to drain plug and tighten drain plug to specified torque.

Tightening torque
Rear differential oil drain plug
(a) : 55 N·m (5.5 kg-m, 40.0 lb-ft)

5) Fill proper amount of new gear oil as specified below (roughly up to level hole).
6) Install new gasket to level/filler plug and tighten level/filler plug to specified torque.

Tightening torque
Rear differential oil level/filler plug
(b) : 50 N·m (5.0 kg-m, 36.5 lb-ft)

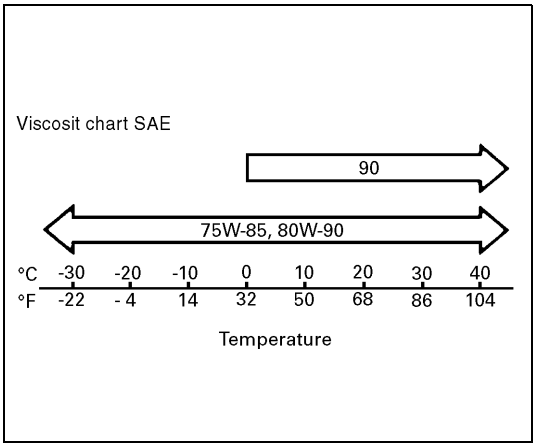

NOTE:

- **It is highly recommended to use SAE 80W-90 viscosity.**
- **Whenever vehicle is hoisted for any other service work than oil change, also be sure to check for oil leakage.**

Differential oil
: Hypoid gear oil API GL-5
For oil viscosity, refer to the chart.

Differential oil capacity
: 0.9 liters (1.9/1.6 US/Imp. pt)

UNIT REPAIR OVERHAUL

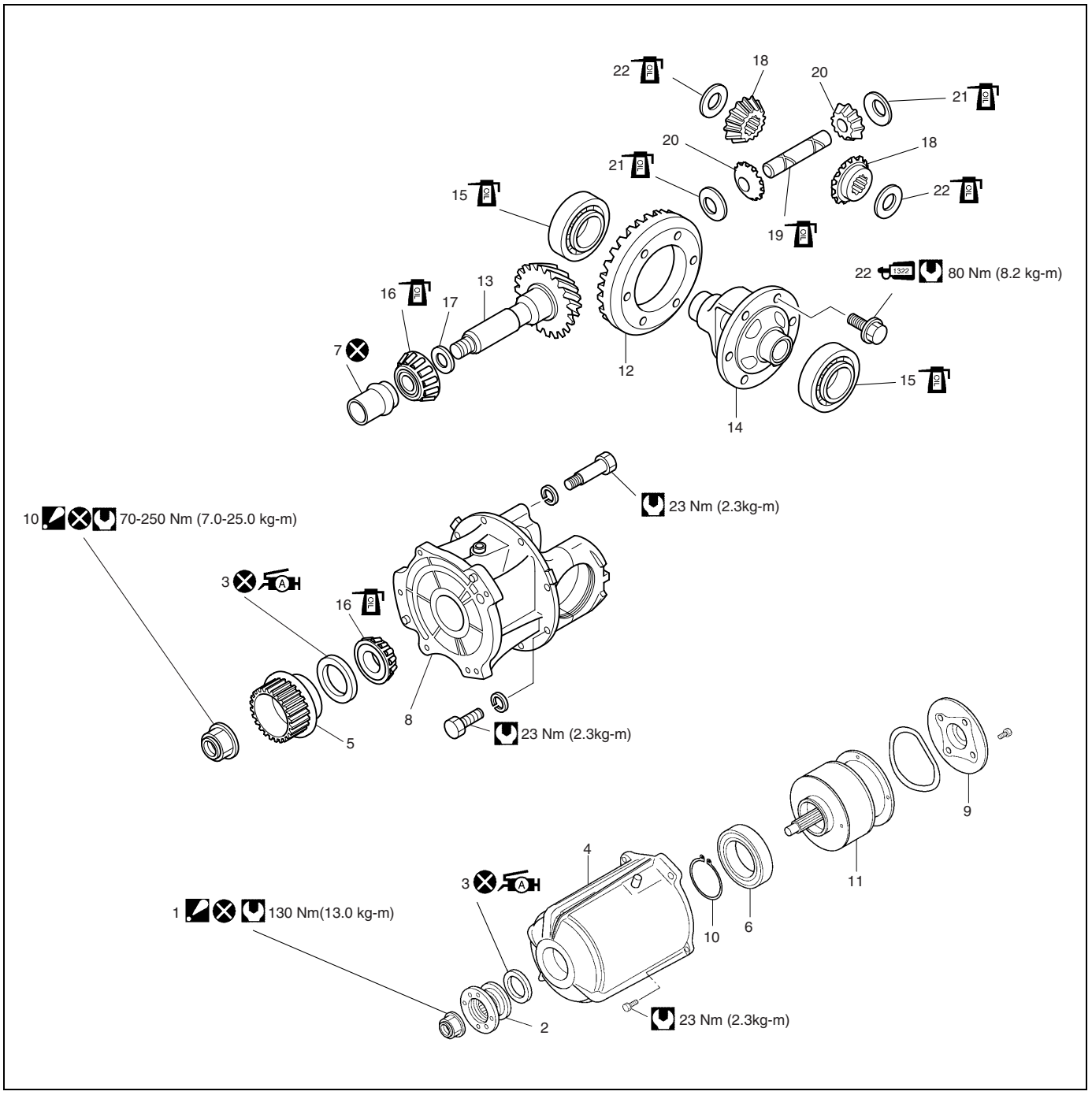

	1. Companion flange nut : After tightening nut to specified torque, caulk nut securely.		10. Drive bevel pinion nut : After tightening nut to specified torque, caulk nut securely.		19. Differential pinion shaft
	2. Companion flange		11. Viscous coupling		20. Differential pinion
	3. Oil seal : Apply grease 99000-25010 to oil seal lip.		12. Drive bevel gear (hypoid gear)		21. Differential pinion washer
	4. Coupling case		13. Drive bevel pinion gear (hypoid gear)		22. Bevel gear bolt : Apply thread lock cement 99000-32110 to thread part of bolt.
	5. Differential input hub		14. Differential case		Do not reuse.
	6. Bearing		15. Differential side bearing		Tightening torque
	7. Spacer		16. Pinion shaft bearing		Apply differential oil
	8. Differential carrier		17. Bevel pinion shim		
	9. Rear differential input flange		18. Differential gear		

DIFFERENTIAL UNIT

DISMOUNTING

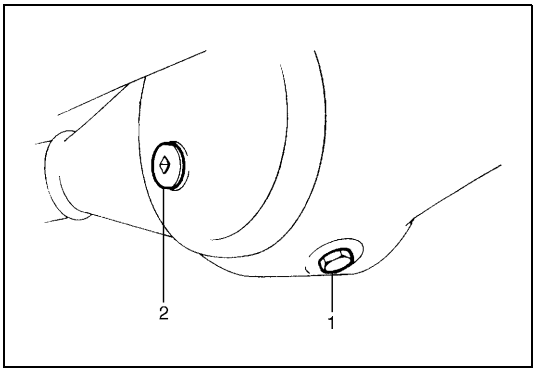

1) Hoist vehicle and remove wheels.
2) Drain oil from rear differential. (Refer to “OIL CHANGE” in this section.)

1. Drain plug
2. Level plug

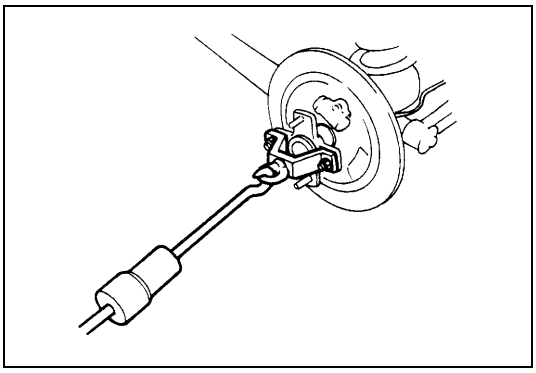

3) Remove brake drum and disconnect parking brake cable from brake back plate.
4) Remove axle shafts, refer to “REAR AXLE SHAFT AND WHEEL BEARING REMOVAL” in Section 3E.

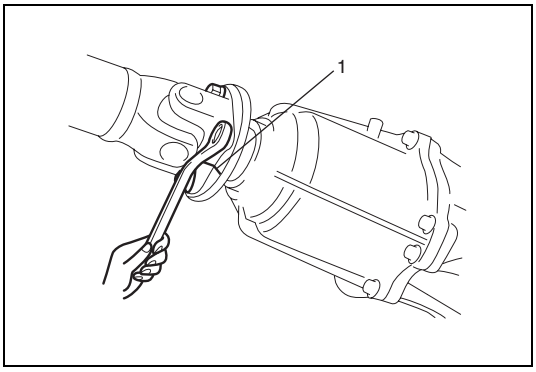

5) Before removing propeller shaft, give match marks (1) on joint flange and propeller shaft as shown.

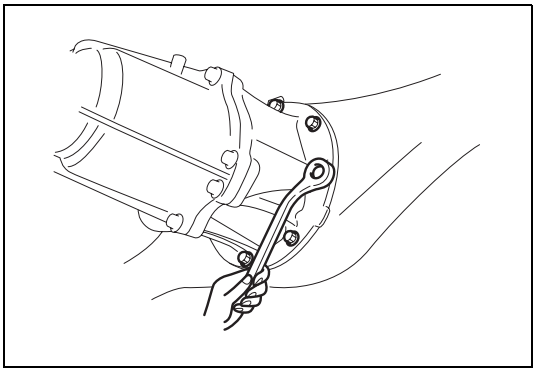

6) Remove differential carrier bolts and differential assembly with viscous coupling case.

REMOUNTING

Reverse removal procedure for installation, noting the following.

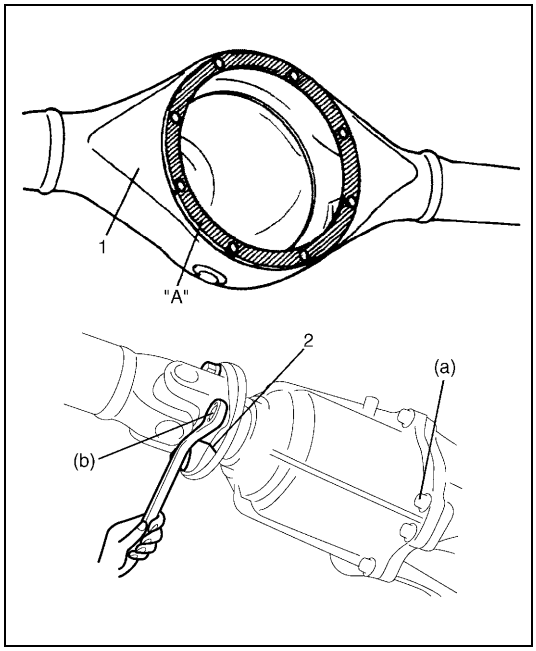

Rear Differential

- Clean mating surfaces of axle housing (1) and differential carrier and apply sealant to housing side.

"A" : Sealant 9900-31110

- Install differential carrier assembly to axle housing and tighten carrier bolts to specified torque.

Tightening torque
Differential carrier bolts
(a) : 23 N·m (2.3 kg-m, 17.0 lb-ft)

- Install propeller shaft to joint flange aligning match marks (2) and tighten propeller shaft bolts to specified torque.

Tightening torque
Propeller shaft bolts
(b) : 23 N·m (2.3 kg-m, 17.0 lb-ft)

Rear Axle Shaft

For installation of rear axle shaft, refer to "REAR AXLE SHAFT AND WHEEL BEARING INSTALLATION" in Section 3E.

Rear Brake Drum

For installation of rear brake drum, refer to "BRAKE DRUM INSTALLATION" in Section 5.

Differential Gear Oil

Refill differential housing with new specified oil. Refer to "OIL CHANGE" in this section for refill.

Brake Circuit Air Purging

Make sure to purge air out of brake circuit. Refer to "BLEEDING BRAKES" in Section 5.
Then check to ensure that joint seam of pipe is free from oil leak.

UNIT DISASSEMBLY

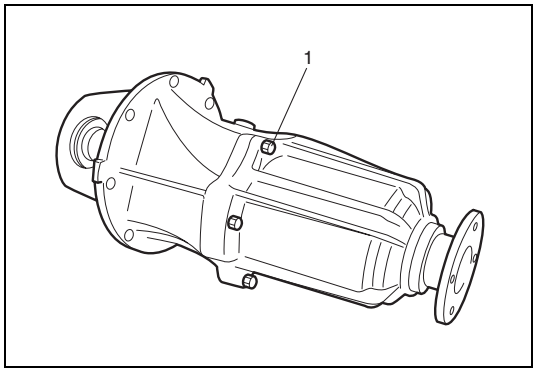

Remove bolts (1) and separate viscous coupling case from differential carrier.

SUB-ASSEMBLY REPAIR

VISCOUS COUPLING

DISASSEMBLY

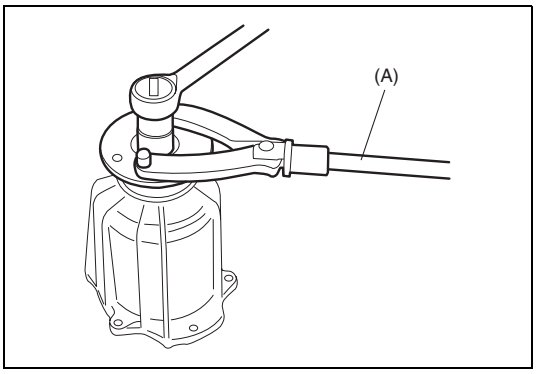

1) Uncaulk flange nut.
2) Hold companion flange with special tool and then remove flange nut by using power wrench.

Special tool
(A) : 09930-40113

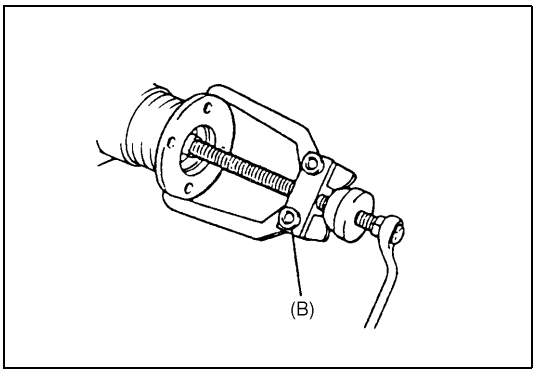

3) Remove companion flange from pinion.
Use special tool if it is hard to remove.

Special tool
(B) : 09913-65135

4) Remove viscous coupling assembly by using hydraulic press.

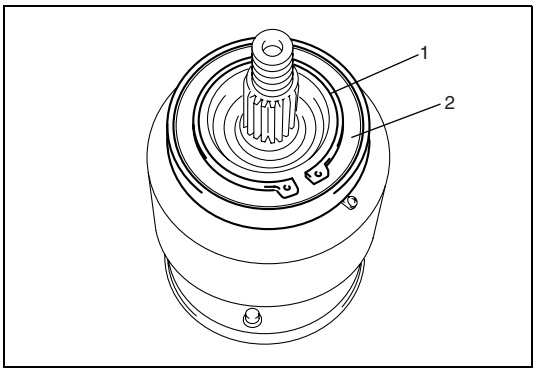

5) Remove snap ring (1) and remove bearing (2) by using puller.

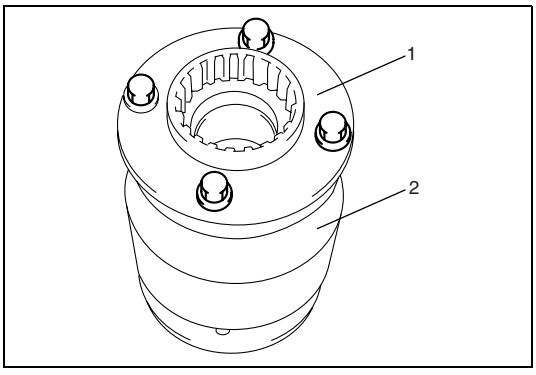

6) Remove rear differential input flange (1) from viscous coupling (2).

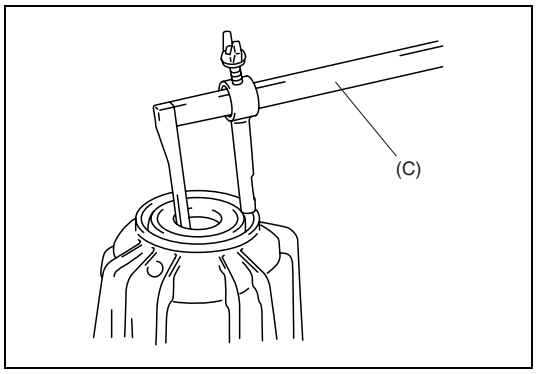

7) Remove coupling case oil seal by using special tool.

Special tool
(C) : 09913-50121

INSPECTION

- Check companion flange for wear of damage.
- Check bearing for wear or discoloration.
- Check coupling case for cracks.
- Check rear differential input flange for wear damage.

ASSEMBLY

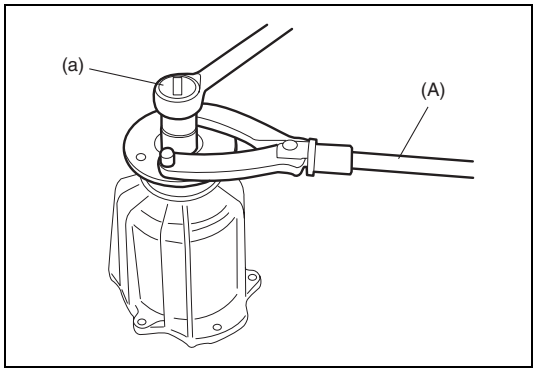

Reverse disassembly procedure for assembly, note the followings

- Tighten companion flange nut to specified torque by using special tool and caulk nut.

Tightening torque
Rear differential companion flange nut
(a) : 130 N·m (13.0 kg-m, 94.0 lb-ft)

Special tool
(A) : 09930-40113

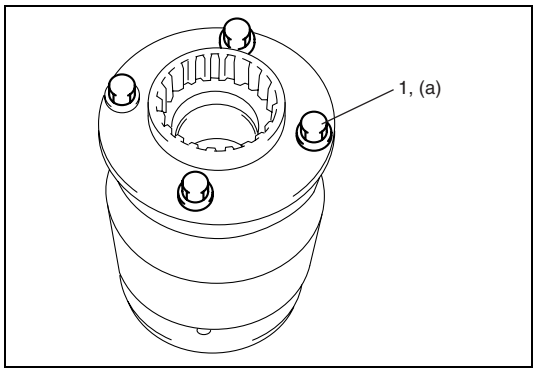

- Tighten rear differential input flange bolt (1) to specified torque.

Tightening torque
Rear differential input flange bolts
(a) : 23 N·m (2.3 kg-m, 17.0 lb-ft)

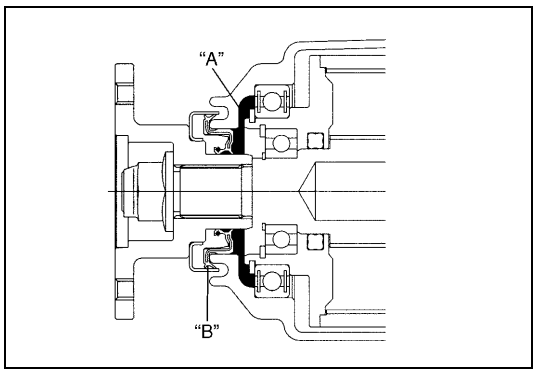

- Use new oil seal
- Apply grease (12–15 g / 0.42–0.53 oz) to oil seal lip portion and companion flange, where daubed in black as shown in figure.

"A" : Grease 99000-25010

- Apply grease (0.3–0.5 g / 0.01–0.02 oz) to oil seal dust lip portion as shown in figure.

"B" : Grease 99000-25010

REAR DIFFERENTIAL

DISASSEMBLY

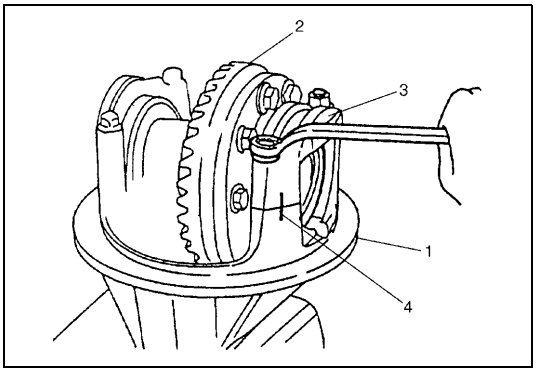

1) Put identification marks (4) on differential side bearing caps (3) and differential carrier (1).
2) Take off differential side bearing caps by removing their bolts and remove differential gear assembly (2).

NOTE:

Check number of shims and thickness of each shim in advance.

3) With aluminum plates placed on vise first, grip differential case with it and remove drive bevel gear by removing its bolts.

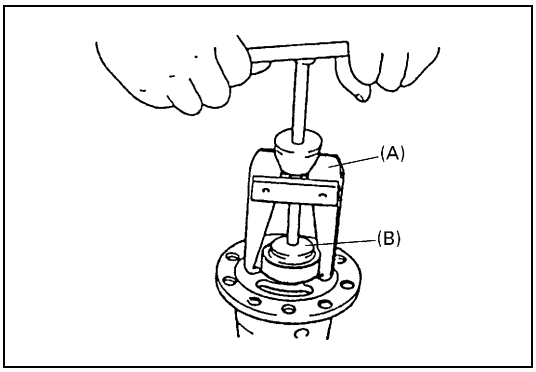

4) Using special tools, pull out differential side bearings.

Special tool
(A) : 09913-60910
(B) : 09925-88210

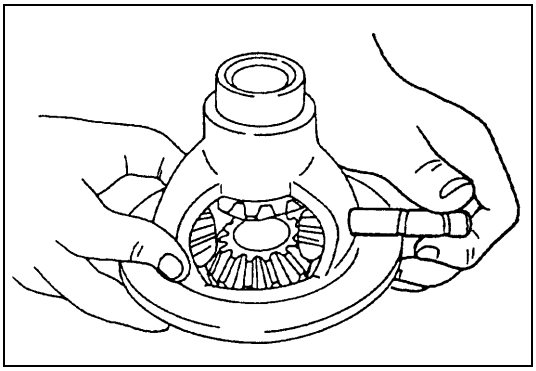

5) Remove differential pinion shaft.
6) Remove differential side gear, pinions and washers.

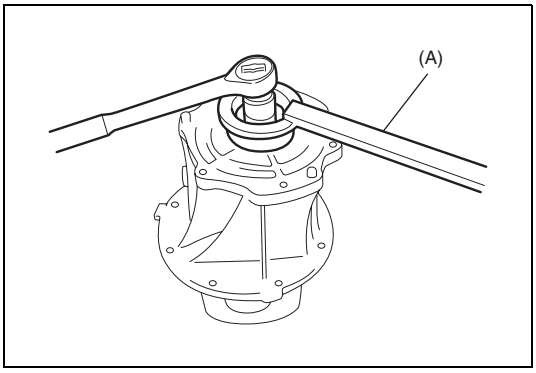

7) Uncaulk bevel pinion nut.
8) Hold differential input hub with special tool and then remove bevel pinion nut.

Special tool
(A) : 09927-28010

9) Remove differential input hub.

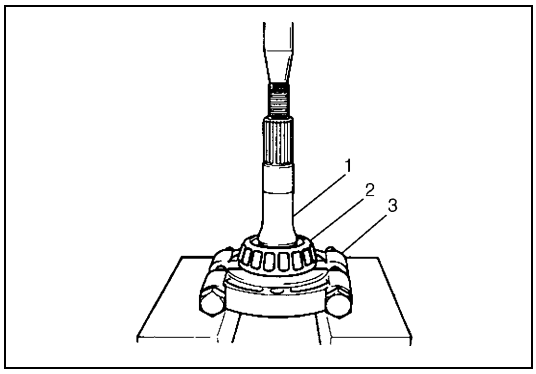

10) Remove bevel pinion (1) with rear bearing, and spacer from carrier.
11) Remove bevel pinion rear bearing (2) by using bearing puller (3) and press.

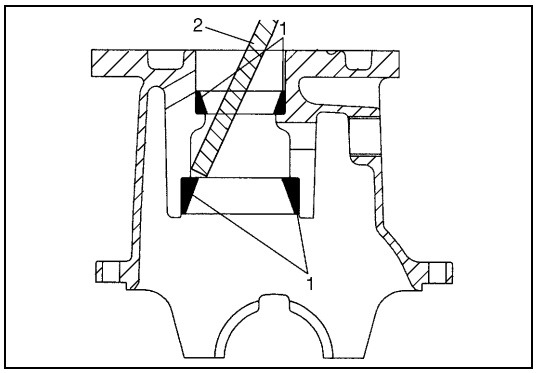

12) Drive out bevel pinion bearing outer race (1) by using metallic stick (2).

INSPECTION

- Check differential input hub for wear or damage.
- Check bearings for wear or discoloration.
- Check differential carrier for cracks.
- Check drive bevel pinion and bevel gear for wear or cracks.
- Check side gears, pinion gears and pinion shaft for wear or damage.
- Check side gear spline for wear or damage.

ADJUSTMENT AND ASSEMBLY

Judging from faulty conditions noted before disassembly and what is found through visual check of bearing and gear tooth etc. after disassembly, prepare replacing parts and proceed to reassembly according to procedures as described below.

CAUTION:

- **Bevel gear and pinion must be replaced as a set when either replacement becomes necessary.**
- **When replacing taper roller bearing, replace as inner race & outer race assembly.**

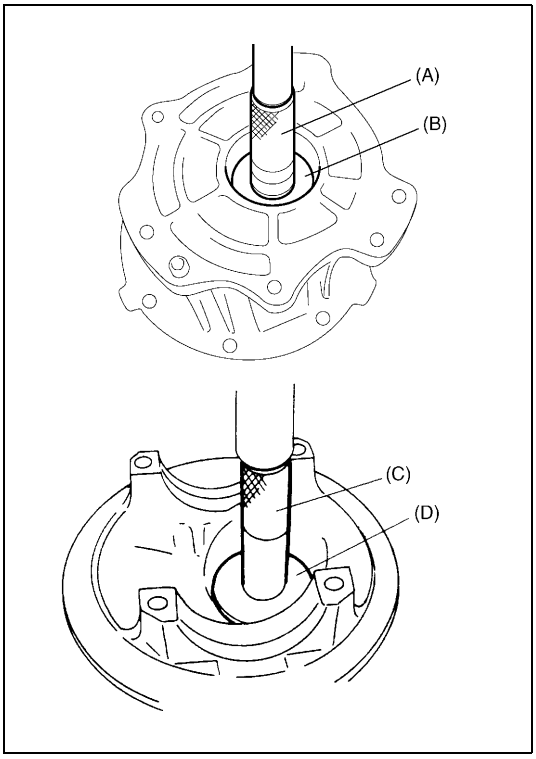

Bevel Pinion Bearing Outer Race

For press-fitting bevel pinion bearing outer races, use special tools as shown.

CAUTION:
Perform press-fitting carefully so as not to tilt outer race.

Special tool
(A) : 09924-74510
(B) : 09925-68210
(C) : 09925-98210
(D) : 09924-84510-002

Differential Case

Judging from abnormality noted before disassembly and what is found through visual check of component parts after disassembly, prepare replacing parts and proceed to reassembly. Make sure that all parts are clean.

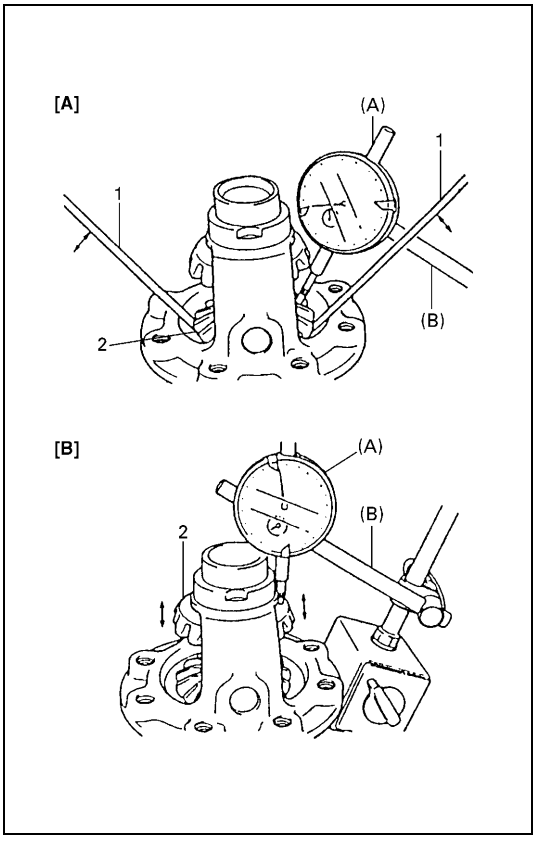

1) Assemble differential gear and measure thrust play of differential gear (2) as follows.

Special tool
(A) : 09900-20606
(B) : 09900-20701

Differential gear thrust play
: 0 – 0.37 mm (0 – 0.014 in.)

[A] :	Right side
[B] :	Left side

Left Side

- Hold differential assembly with soft jawed vise and apply measuring tip of dial gauge to top surface of gear (2).
- Using 2 screwdrivers (1), move gear (2) up and down and read movement of dial gauge pointer.

Right Side

- Using similar procedure to the above, set dial gauge tip to gear shoulder.
- Move gear (2) up and down by hand and read dial gauge.

2) If thrust play is out of specification, select suitable side washer from among following available size, install it and check again that specified gear play is obtained.

Available side washer thickness
0.90, 1.00 and 1.10 mm (0.035, 0.039 and 0.043 in.)

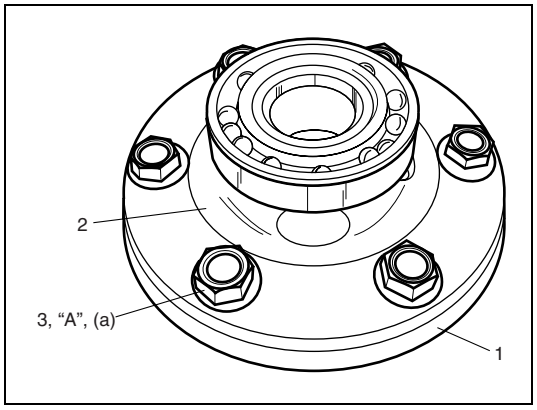

3) Put drive bevel gear (1) on differential case (2) and fasten them with bolts (3) by tightening them to specified torque. Use thread lock cement for bolts (3).

CAUTION:
Use of any other bolts than that specified is prohibited.

“A” : Thread lock cement 99000-32110

Tightening torque
Drive bevel gear bolts (a) : 80 N·m (8.0 kg-m, 58.0 lb-ft)

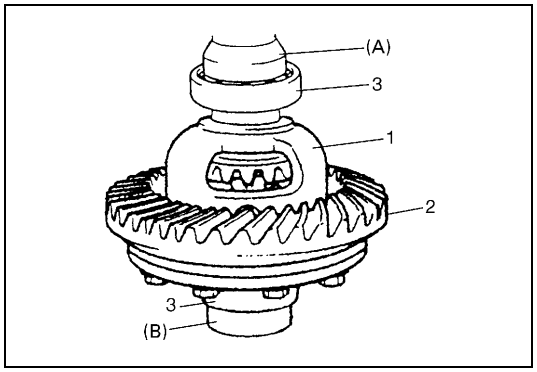

4) Press-fit differential side bearings (3) to differential case (1) by using special tools.

Special tool
(A) : 09951-76010
(B) : 09951-16060

2. Drive bevel gear

Differential Carrier

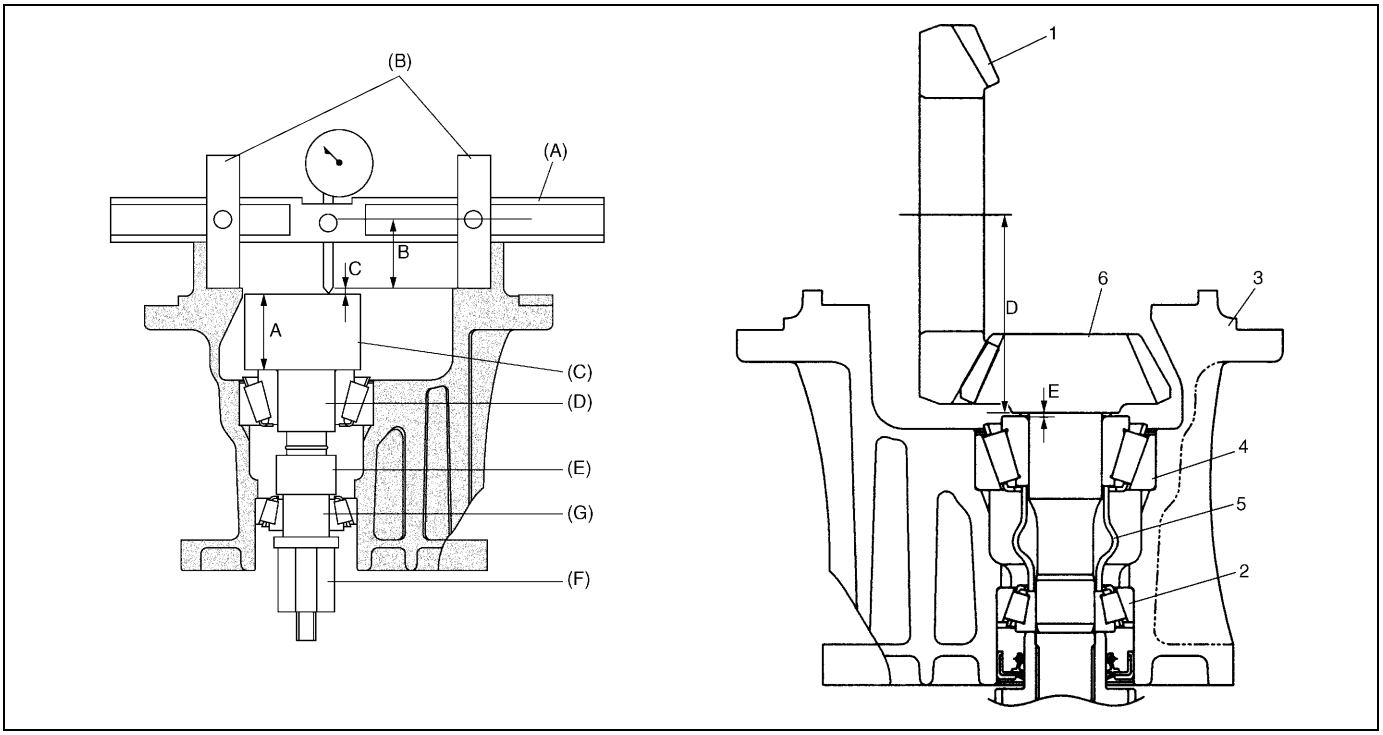

A: Pinion dummy height	D: Drive bevel pinion mounting distance 68.00mm/2.67716 in.	3. Differential carrier
B: Axle dummy radius	E: Shim size for mounting distance adjustment (E = C)	4. Rear bearing
A+B: Mounting dummy size 68.00mm/2.67716 in.	1. Drive bevel gear	5. Spacer
C: Measured dimension	2. Front bearing	6. Drive bevel pinion

Special tool
(A) : 09922-76120
(B) : 09922-76250
(C) : 09922-76140
(D) : 09922-76430
(E) : 09922-76330
(F) : 09922-76150
(G) : 09922-76350

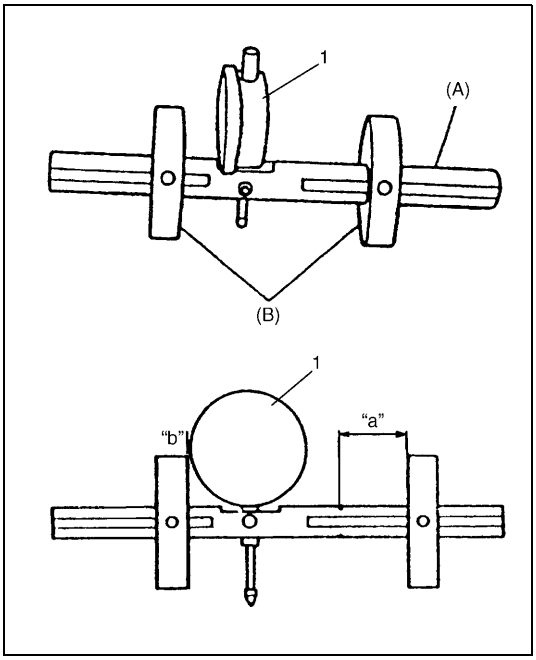

1) Set special tools and make drive bevel pinion mounting dummy.

Special tool
(A) : 09922-76120
(B) : 09922-76250

2) Install dial gauge (1) to mounting dummy as shown in figure.

Special tool set distance
"a" : 25.0 mm (0.984 in.)
"b" : 0 mm (0.000 in.)

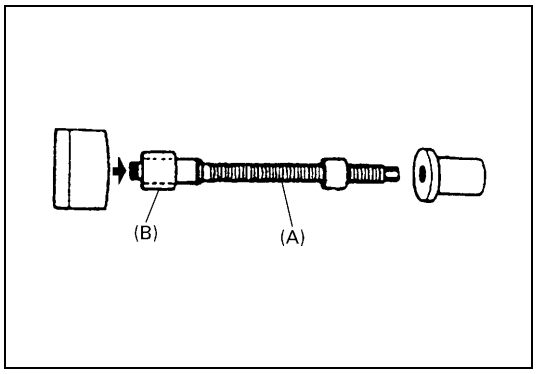

3) Set special tools and make drive bevel pinion dummy.

Special tool
(A) : 09922-76140
(B) : 09922-76430

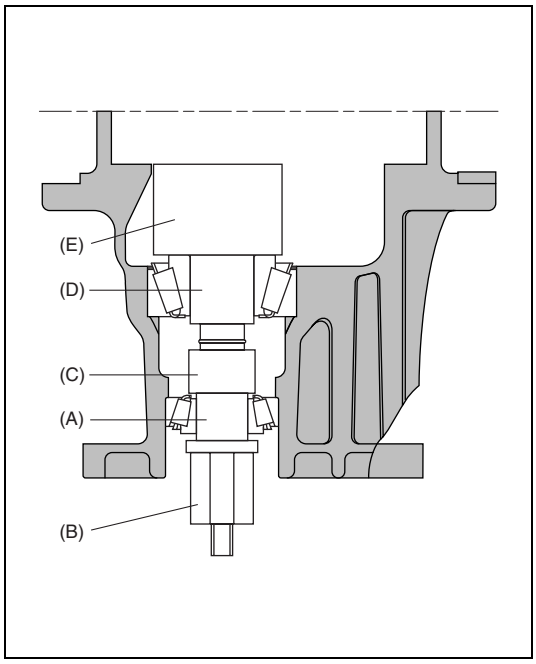

4) Apply gear oil to drive bevel pinion bearing, install bearing to bevel pinion dummy and then install bevel pinion dummy to differential carrier.
5) Apply gear oil to drive bevel pinion bearing, install bearing to special tool.
   Then install them with another special tool to bevel pinion dummy.

Special tool
(A) : 09922-76350
(B) : 09922-76150
(C) : 09922-76330
(D) : 09922-76430
(E) : 09922-76140

NOTE:

This installation requires no spacer or oil seal.

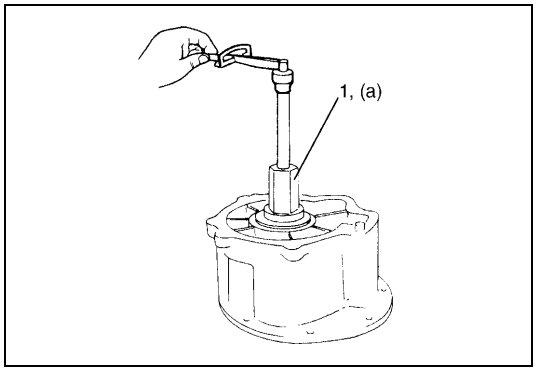

6) Tighten bevel pinion nut (special tool) (1) so that specified bearing preload is obtained.

NOTE:

Before taking measurement, check for rotation by hand more than 15 revolutions.

Pinion bearing preload (at 50 r/min)
(a) : 5.0 – 13.0 kg-cm (4.4 – 11.2 lb-in.)

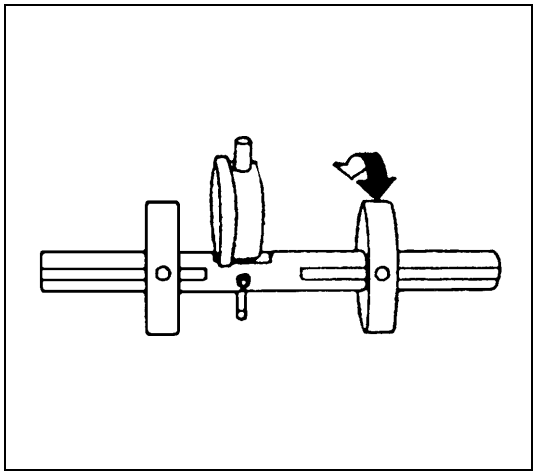

7) Set dial gauge to bevel pinion mounting dummy and make 0 (zero) adjustment on surface plate.

NOTE:

- **When setting dial gauge to mounting dummy, tighten screw lightly. Be careful not to overtighten it, which will cause damage to dial gauge.**
- **With dial gauge set, turn dummy back and forth by hand a couple of times and attain accurate 0 (zero) adjustment.**
- **It is desirable that short pointer indicates beyond 2 mm when long one is at 0 (zero).**

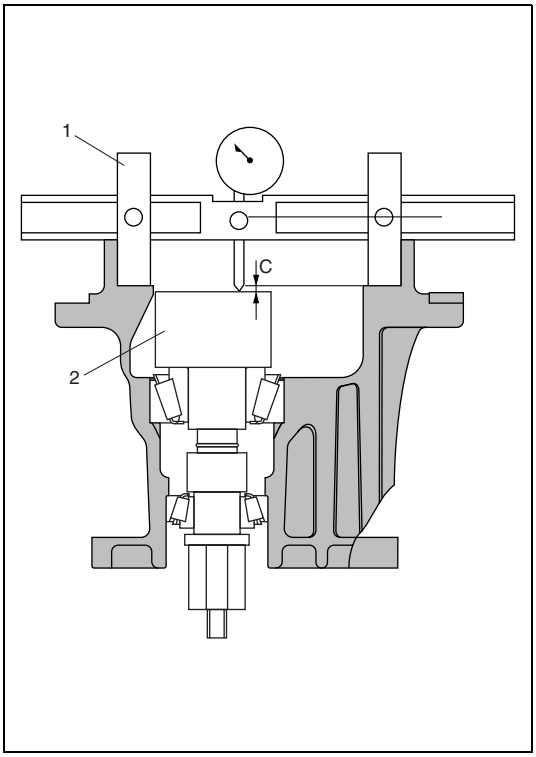

8) Place zero-adjusted mounting dummy (1) and dial gauge set on pinion dummy (2) and take measurement between zero position and extended dial gauge measuring tip.

NOTE:

- **Repeat turning back and forth of dummy and measure distance as far as top surface of pinion dummy accurately.**
- **When dial gauge measuring tip extends from 0 (zero) position, pointer turns counterclockwise.**
- **Measured value may exceed 1 mm. Therefore, it is also necessary to know reading of short pointer.**

9) Obtain adjusting shim thickness by using measured value by dial gauge in the following equation.

Necessary shim thickness	=	Dial gauge measured value C

1. Drive bevel pinion mounting dummy
2. Drive bevel pinion dummy

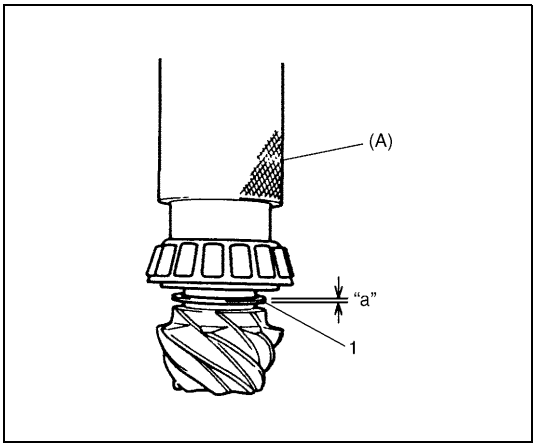

10) Select adjusting shim(s) (1) closest to calculated value from among following available sizes and put it in place and then press-fit rear bearing.

Special tool
(A) : 09913-80112

Available shim thickness
"a" : 0.30, 1.00, 1.03, 1.06, 1.09, 1.12, 1.15, 1.18, 1.21, 1.24, 1.27, and 1.30 mm (0.012, 0.039, 0.041, 0.042, 0.043, 0.044, 0.045, 0.046, 0.048, 0.049, 0.050 and 0.051 in.)

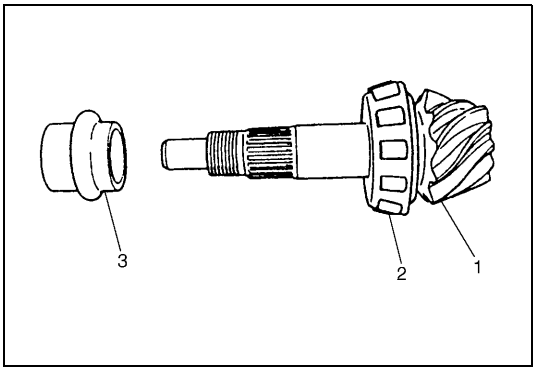

11) With new pinion spacer (3) inserted as shown, install front bearing to differential carrier.

NOTE:

- **Make sure to use new spacer for reinstallation.**
- **Apply oil to bearings.**

1. Drive bevel pinion
2. Rear bearing

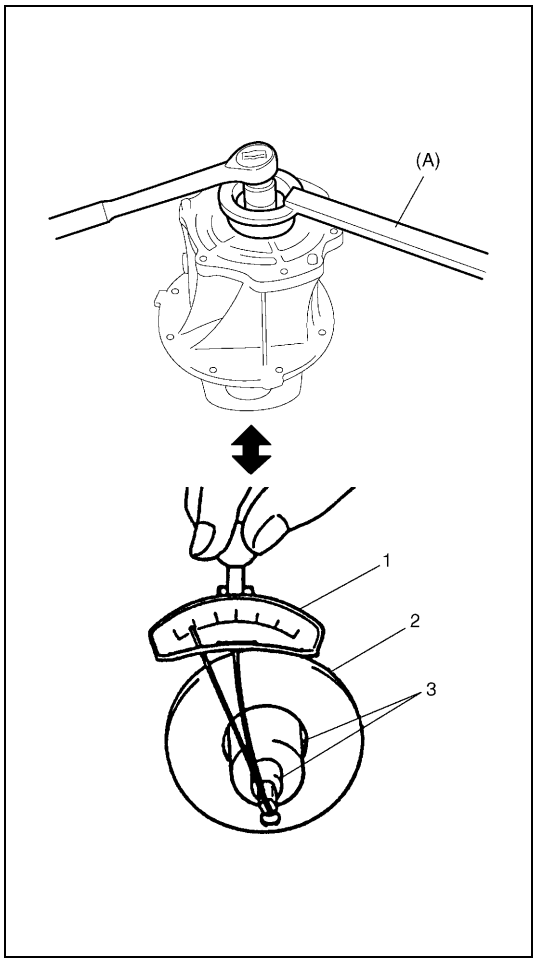

12) While tightening bevel pinion nut gradually with bevel pinion holder (special tool), set preload of pinion to specification.

NOTE:

- **Before taking measurement, check for smooth rotation by hand.**
- **Bevel pinion bearing preload is adjusted by tightening bevel pinon nut to deform spacer.**
  Therefore, be sure to use a new spacer for adjustment and tighten pinion nut step by step and check for starting torque (preload) as often as tightening to prevent over crushing of spacer.
  If exceeds specification given below during adjustment, replace spacer and repeat preload adjustment procedure. Attempt to decrease starting torque (preload) by loosening pinon nut will not do.

Pinion bearing preload
: 5.0 – 13.0 kg-cm (4.4 – 11.2 lb-in.)

Special tool
(A) : 09927-28010

1. Torque wrench
2. Differential input hub
3. Socket with adapter

Differential Assembly

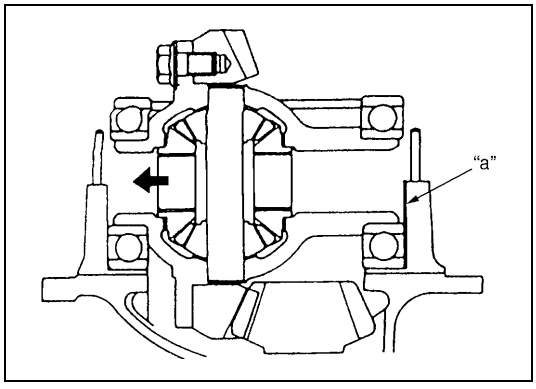

1) Place differential gear case assembly to differential carrier, push differential case to left side as shown in figure.
   Then measure clearance "a" between side bearing and differential carrier by using thickness gauge.
   Select shims closest to measured value.

Available shim thickness
: 1.35,1.40,1.45, 1.50, 1.55, 1.60, 1.65, 1.70 and 1.75 mm (0.0531, 0.0551, 0.0571, 0.0591, 0.0610, 0.0630, 0.0650, 0.669 and 0.0689 in.)

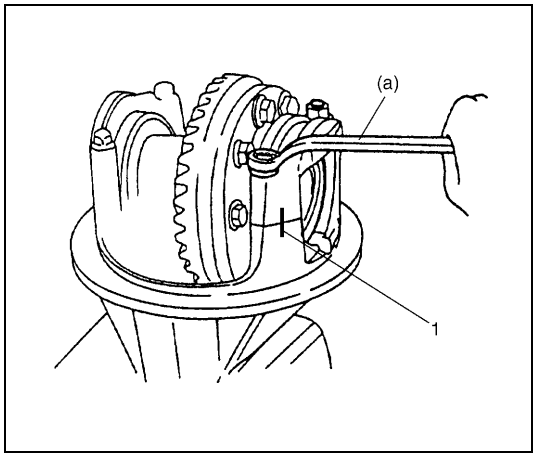

2) Divide selected shim(s) between both sides (right and left) and install them to differential carrier. Then install differential side bearing cap.

Tightening torque
Differential side bearing cap bolts
(a) : 23 N·m (2.3 kg-m, 17.0 lb-ft)

NOTE:

- **Align match marks (1) on cap and carrier.**
- **Apply gear oil to bearing.**

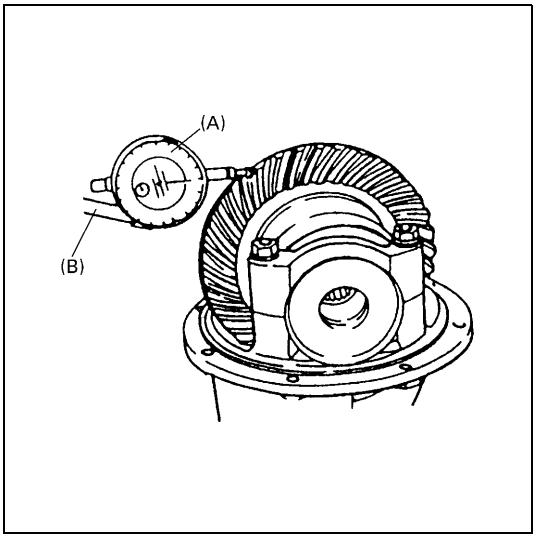

3) Measure backlash by using dial gauge.

Drive bevel gear backlash
: 0.10 – 0.20 mm (0.0039 – 0.0078 in.)

NOTE:

- **Be sure to apply measuring tip of dial gauge at right angles to convex side (drive side) of tooth.**
- **If backlash is out of specification, change division of shims so that backlash is within specification.**

Special tool
(A) : 09900-20606
(B) : 09900-20701

4) Check gear tooth contact as follows.
   a) After cleaning tooth surface of drive bevel gears, paint them with gear marking compound evenly by using brush or sponge etc.

CAUTION:
When applying red lead paste to teeth, be sure to paint tooth surfaces uniformly. The paste must not be too dry or too fluid.

   b) Turn gear to bring its painted part in mesh with bevel pinion and turn it back and forth by hand to repeat their contact.
   c) Bring painted part up and check contact pattern, referring to the following chart. If contact pattern is not normal, readjust or replace as necessary according to instruction in chart.

NOTE:

Be careful not to turn bevel gear more than one full revolution, for it will hinder accurate check.

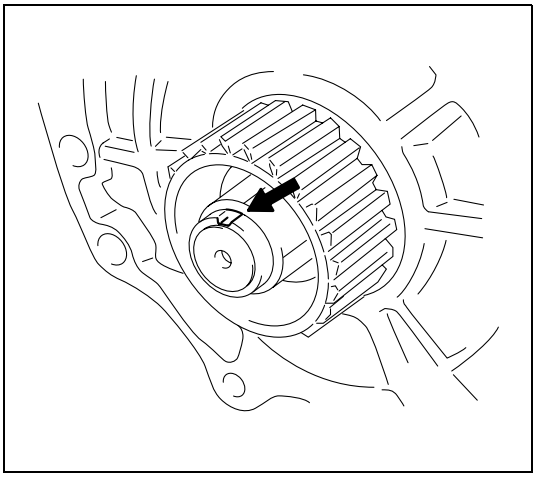

5) After completing of gear tooth contact check caulk bevel pinion nut with caulking tool and hammer.

TOOTH CONTACT PATTERN	DIAGNOSIS AND REMEDY
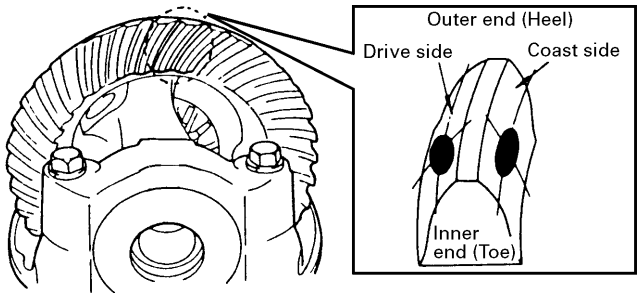	NORMAL
	HIGH CONTACT Pinion is positioned too fat from the center of drive bevel gear. 1) Increase thickness of pinion height adjusting shim and position pinion closer to gear center. 2) Adjust drive bevel gear backlash to specification. 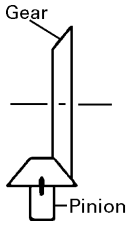
	LOW CONTACT Pinion is positioned too close to the center of drive bevel gear. 1) Decrease thickness of pinion height adjusting shim and position pinion farther from gear center. 2) Adjust drive bevel gear backlash to specification. 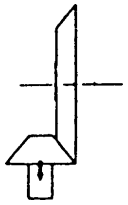
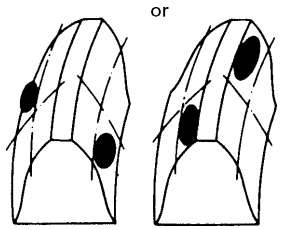	These contact patterns indicate that the “offset” of differential is too much or too little. The remedy is to replace the carrier with a new one.
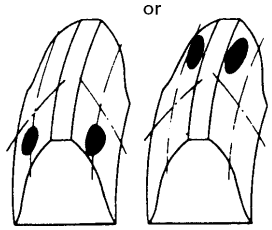	These contact patterns, located on toe or heel on both drive and coast sides, mean that 1) both pinion and gear are defective, 2) carrier is not true and square, or 3) gear is not properly seated on differential case. The remedy is to replace the defective member.

TOOTH CONTACT PATTERN	DIAGNOSIS AND REMEDY
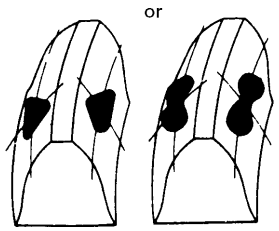	Irregular patterns: If the pattern is not oval, it means that bevel gear is defective. High or low spots on tooth surfaces or on the seat of bevel gear are the cause of irregular patterns appearing on some teeth. The remedy is to replace the pinion and-gear set and, if the seat is defective, so is transfer case.

UNIT ASSEMBLY

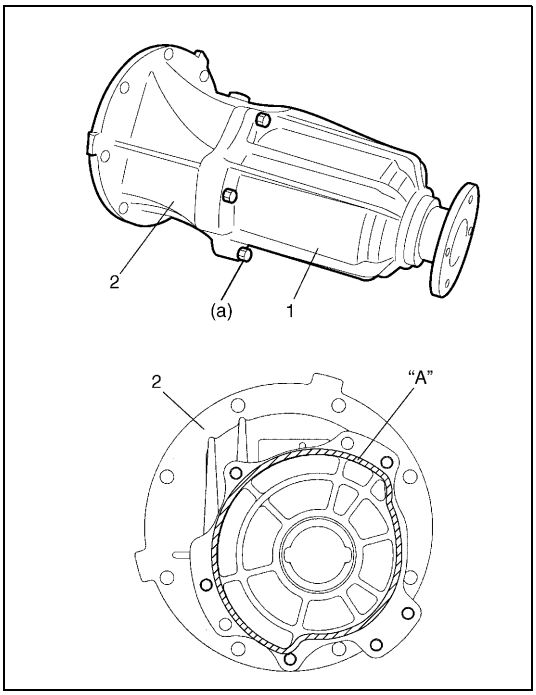

Before installing viscous coupling case (1) to differential carrier (2), clean mating surfaces of viscous coupling case and differential carrier, then apply sealant to differential carrier (2) by using a nozzle as shown in figure by such amount that its section is 1.5mm (0.059 in.) in diameter.

"A" : Sealant 99000-31110

Tightening torque
Coupling case bolts (a) : 25 N·m (2.5 kg-m, 18.0 lb-ft)

TIGHTENING TORQUE SPECIFICATION

Fastening part	Tightening torque		
	N•m	kg-m	lb-ft
Rear differential oil drain plug	55	5.5	40.0
Rear differential oil level/filler plug	50	5.0	36.5
Rear differential companion flange nut	130	13.0	94.0
Rear differential input flange bolts	23	2.3	17.0
Drive bevel gear bolts	80	8.0	58.0
Differential side bearing cap bolts	23	2.3	17.0
Coupling case bolts	25	2.5	18.0
Differential carrier bolts	23	2.3	17.0
Propeller shaft bolts	23	2.3	17.0

REQUIRED SERVICE MATERIAL

Material	Recommended SUZUKI product (Part Number)	Use
Thread lock cement	THREAD LOCK CEMENT 1322 (99000-32110)	Bevel gear bolts
Lithium grease	SUZUKI SUPER GREASE A (99000-25010)	Oil seal lips
Sealant	SUZUKI BOND NO. 1215 (99000-31110)	• Thread part of differential carrier bolt • Mating surface of differential housing • Mating surface of rear axle housing • Mating surface of viscous coupling case

SPECIAL TOOL

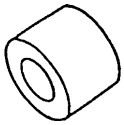 09951-16060 Lower arm bush remover	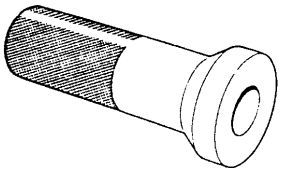 09951-76010 Bearing installer	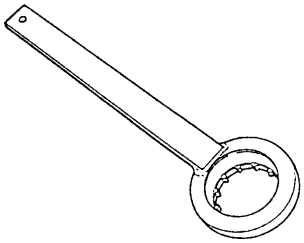 09927-28010 Bevel pinion holder	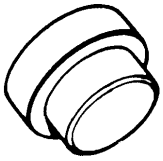 09925-88210 Bearing puller attachment
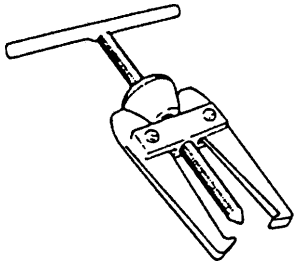 09913-60910 Bearing puller	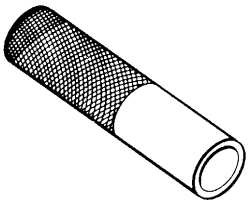 09913-80112 Bearing installer	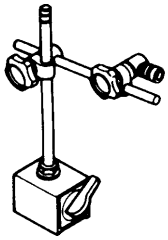 09900-20701 Magnetic stand	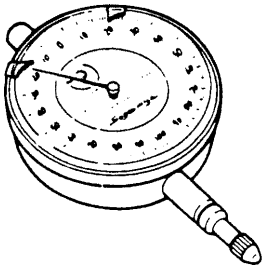 09900-20606 Dial gauge
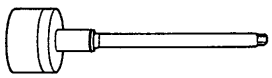 09922-76140 Bevel pinion shaft	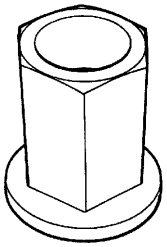 09922-76150 Bevel pinion nut	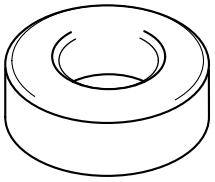 09922-76330 Rear collar	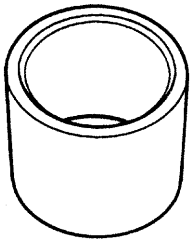 09922-76430 Front collar

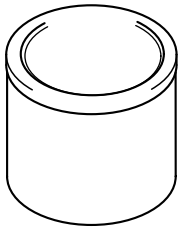 09922-76350 Gauge block	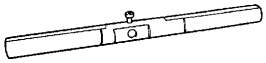 09922-76120 Dummy shaft	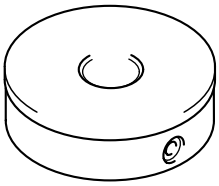 09922-76250 Bevel gear dummy	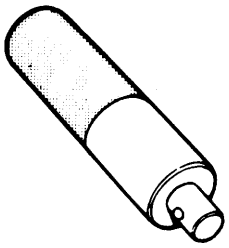 09924-74510 Bearing installer handle
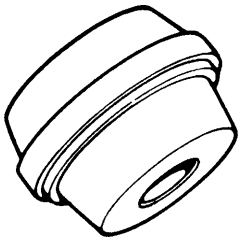 09925-68210 Bearing installer	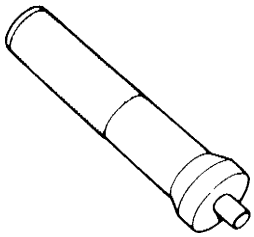 09925-98210 Bearing installer	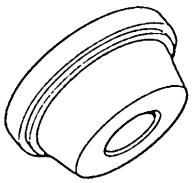 09924-84510-002 Bearing installer	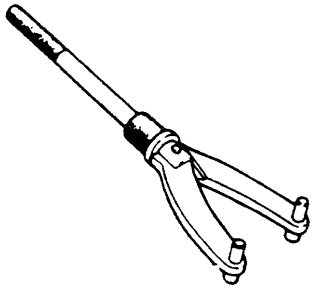 09930-40113 Flange holder
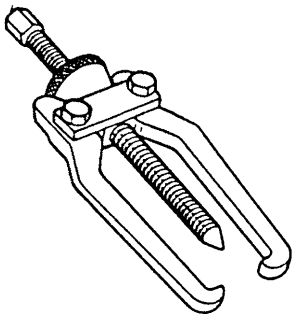 09913-65135 Bearing puller	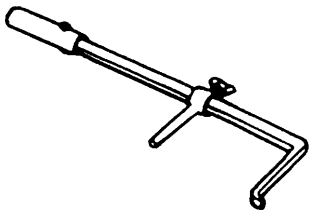 09913-50121 Oil seal remover		

SECTION 8

BODY ELECTRICAL SYSTEM

WARNING:

For vehicles equipped with Supplemental Restraint (Air Bag) System :

- **Service on and around the air bag system components or wiring must be performed only by an authorized SUZUKI dealer. Refer to "Air Bag System Components and Wiring Location View" under "General Description" in air bag system section in order to confirm whether you are performing service on or near the air bag system components or wiring. Please observe all WARNINGS and "Service Precautions" under "On-Vehicle Service" in air bag system section before performing service on or around the air bag system components or wiring. Failure to follow WARNINGS could result in unintentional activation of the system or could render the system inoperative. Either of these two conditions may result in severe injury.**
- **Technical service work must be started at least 90 seconds after the ignition switch is turned to the "LOCK" position and the negative cable is disconnected from the battery. Otherwise, the system may be activated by reserve energy in the Sensing and Diagnostic Module (SDM).**

8

CONTENTS

DIAGNOSIS 8-3
HEADLIGHT 8-3
HEADLIGHTS WITH LEVELING SYSTEM (IF EQUIPPED) 8-3
TURN SIGNAL AND HAZARD WARNING LIGHT 8-3
CLEARANCE, TAIL AND LICENSE PLATE LIGHT 8-4
BACK-UP LIGHT 8-4
BRAKE LIGHT 8-4
FRONT FOG LIGHT (IF EQUIPPED) 8-4
REAR FOG LIGHT (IF EQUIPPED) 8-4
SPEEDOMETER AND VSS 8-5
FUEL METER AND FUEL LEVEL SENSOR (GAUGE UNIT) 8-5
ENGINE COOLANT TEMPERATURE (ECT) METER AND ECT SENSOR 8-5
OIL PRESSURE WARNING LIGHT 8-5
BRAKE AND PARKING BRAKE WARNING LIGHT 8-6
REAR WINDOW DEFOGGER 8-6
WIPERS AND WASHERS 8-6
FRONT WIPER AND WASHER 8-6
REAR WIPER AND WASHER (IF EQUIPPED) 8-6
POWER WINDOW CONTROL SYSTEM (IF EQUIPPED) 8-7
CIGARETTE LIGHTER 8-7
POWER DOOR LOCK CONTROL SYSTEM (IF EQUIPPED) 8-7
KEYLESS ENTRY SYSTEM (IF EQUIPPED) 8-7
POWER DOOR MIRROR CONTROL SYSTEM (IF EQUIPPED) 8-8
INTERIOR LIGHT 8-8
HORN 8-8
IGNITION KEY REMAINDER (IF EQUIPPED) AND LIGHT REMAINDER WARNING BUZZER 8-8
SEAT BELT WARNING LIGHT (IF EQUIPPED) 8-8
FRONT SEAT HEATER (IF EQUIPPED) 8-9
ON-VEHICLE SERVICE 8-9
CAUTIONS IN SERVICING 8-9
HEADLIGHT 8-9
HEADLIGHT SWITCH 8-9
HEADLIGHT ASSEMBLY 8-10
HEADLIGHT BULB 8-10
HEADLIGHT AIMING ADJUSTMENT WITH SCREEN 8-11
HEADLIGHT LEVELING SWITCH (IF EQUIPPED) 8-12
TURN SIGNAL AND HAZARD WARNING LIGHTS 8-12
TURN SIGNAL LIGHT SWITCH 8-12
REMOVAL AND INSTALLATION 8-12
TURN SIGNAL AND HAZARD RELAY 8-13
HAZARD SWITCH 8-13
FRONT FOG LIGHTS (IF EQUIPPED) 8-13
FRONT FOG LIGHT SWITCH 8-13
REAR FOG LIGHT (IF EQUIPPED) 8-14
REAR FOG LIGHT SWITCH 8-14
IGNITION SWITCH 8-14
COMBINATION METER 8-15

CIRCUIT..... 8-15
FUEL METER AND FUEL LEVEL SENSOR (GAUGE UNIT)..... 8-16
FUEL LEVEL METER..... 8-16
FUEL LEVEL SENSOR (GAUGE UNIT)... 8-17
SPEED METER AND VSS..... 8-17
VSS..... 8-17
ENGINE COOLANT TEMPERATURE (ECT) METER AND SENSOR..... 8-17
ENGINE COOLANT TEMPERATURE (ECT) METER..... 8-17
ECT SENSOR..... 8-18
OIL PRESSURE WARNING LIGHT..... 8-18
OIL PRESSURE SWITCH..... 8-18
BRAKE FLUID LEVEL AND PARKING BRAKE WARNING LIGHT..... 8-18
BRAKE FLUID LEVEL SWITCH..... 8-18
PARKING BRAKE SWITCH..... 8-19
REAR WINDOW DEFOGGER..... 8-19
DEFOGGER SWITCH..... 8-19
DEFOGGER WIRE..... 8-19
WIPERS AND WASHERS..... 8-21
COMPONENTS..... 8-21
FRONT WIPER AND WASHER SWITCH..... 8-21
FRONT WIPER MOTOR..... 8-23
WASHER TANK AND WASHER PUMP..... 8-24
REAR WIPER AND WASHER SWITCH (IF EQUIPPED)..... 8-25
REAR WIPER MOTOR.....8-25
IGNITION KEY REMAINDER (IF EQUIPPED) AND LIGHT REMAINDER WARNING BUZZER.....8-25
POWER WINDOW CONTROL SYSTEM (IF EQUIPPED).....8-26
POWER WINDOW MAIN SWITCH.....8-26
POWER WINDOW SUB SWITCH.....8-27
DOOR SWITCH.....8-27
STOP LAMP (BRAKE) SWITCH.....8-27
POWER DOOR LOCK SYSTEM (IF EQUIPPED).....8-28
DOOR LOCK CONTROLLER.....8-28
DRIVER'S DOOR KNOB SWITCH.....8-28
DOOR LOCK ACTUATOR.....8-29
KEYLESS ENTRY SYSTEM (IF EQUIPPED).....8-29
DOOR LOCK CONTROLLER.....8-29
DOOR LOCK ACTUATOR.....8-29
RECEIVER.....8-30
TRANSMITTER.....8-30
POWER DOOR MIRROR CONTROL SYSTEM (IF EQUIPPED).....8-31
MIRROR SWITCH.....8-31
DOOR MIRROR ACTUATOR.....8-32
FRONT SEAT HEATER (IF EQUIPPED).....8-32
SEAT HEATER SWITCH (DRIVER AND PASSENGER SIDE).....8-32
SEAT HEATER WIRE.....8-33

DIAGNOSIS

NOTE:

Fuse name (“ ”) in the table below is shown on the fuse box cover.

HEADLIGHT

Condition	Possible Cause	Correction
Headlights do not light up	Lighting or dimmer switch faulty	Check headlight switch.
	Headlight R and L fuses blown	Replace fuse to check for short.
	Wiring or grounding faulty	Repair circuit.
Only one headlight does not light up	Bulb blown	Replace bulb.
	Headlight R or L fuse blown	Replace fuse to check for short.
	Wiring or grounding faulty	Repair circuit.
Only one beam (“Hi” or “Lo”) does not light	Bulb blown	Replace bulb.
	Lighting or dimmer switch faulty	Check switch.
	Wiring or grounding faulty	Repair circuit.

HEADLIGHTS WITH LEVELING SYSTEM (IF EQUIPPED)

Condition	Possible Cause	Correction
Both headlights do not move	“WIPER/WASHER” fuse blown	Replace fuse to check for short.
	Leveling switch faulty	Check switch.
	Supply voltage too low	Recharge or replace battery.
One of headlights (either Right or Left) does not move	Socket, wiring or grounding faulty	Repair.
	Actuator faulty	Check actuator.
	Vehicle body around headlight deformed	Repair body.
	Headlight assembly itself deformed	Replace headlight assembly.

TURN SIGNAL AND HAZARD WARNING LIGHT

Condition	Possible Cause	Correction
Flash rate high or one side only flashes	Bulb blown on “flash rate high”-side	Replace bulb.
	Incorrect bulb	Replace bulb.
	Turn signal/hazard warning relay faulty	Check relay.
	Open circuit or high resistance existing between combination switch (turn signal/hazard warning switch) and light on one side	Repair circuit.
	Wiring or grounding faulty	Repair circuit.
No flashing	“HORN HAZARD” fuse and/or “TURN/BACK” fuse(s) blown	Replace fuse(s) to check for short.
	Open circuit or high resistance existing between battery and switch	Repair circuit.
	Turn signal/hazard relay faulty	Check relay.
	Combination switch or hazard switch faulty	Check switch.
	Wiring or grounding faulty	Repair circuit.
Flash rate low	Supply voltage low	Check charging system.
	Turn signal/hazard relay faulty	Check relay.

CLEARANCE, TAIL AND LICENSE PLATE LIGHT

Condition	Possible Cause	Correction
All lights do not light up	"TAIL" fuse blown	Replace fuse to check for short.
	Combination switch (lighting and dimmer switch) faulty	Check switch.
	Wiring or grounding faulty	Repair circuit.
Some lights do not light up	Bulb(s) blown	Replace bulb(s).
	Wiring or grounding faulty	Repair circuit.

BACK-UP LIGHT

Condition	Possible Cause	Correction
Back-up lights do not light up	Bulb(s) blown	Replace bulb(s).
	"TURN/BACK" fuse blown	Replace fuse to check for short.
	Back-up light switch faulty	Check switch.
	Wiring or grounding faulty	Repair circuit.
Back-up lights stay on	Back-up light switch faulty	Check or replace switch.

BRAKE LIGHT

Condition	Possible Cause	Correction
Brake lights do not light up	Bulb(s) blown	Replace bulb(s).
	"STOP" fuse blown	Replace fuse to check for short.
	Brake light (stop lamp) switch faulty	Check switch.
	Wiring or grounding faulty	Repair circuit.
Brake lights stay on	Brake light (stop lamp) switch faulty	Check, adjust or replace switch.

FRONT FOG LIGHT (IF EQUIPPED)

Condition	Possible Cause	Correction
Only one light does not light	Bulb blown	Replace bulb.
	Wiring or grounding faulty	Repair circuit.
Front fog lights do not light	"FOG" fuse blown	Replace fuse to check for short.
	Front fog light switch faulty	Check switch.
	Front fog light relay faulty	Replace relay.
	Wiring or grounding faulty	Repair circuit.

REAR FOG LIGHT (IF EQUIPPED)

Condition	Possible Cause	Correction
Rear fog light does not come on	"FOG" fuse blown	Replace fuse to check for short.
	Rear fog light switch faulty	Check fog light switch.
	Lighting switch faulty	Check switch.
	Wiring or grounding faulty	Repair circuit.
	Bulb blown	Replace bulb.

SPEEDOMETER AND VSS

Condition	Possible Cause	Correction
Speedometer shows no operation or incorrect operation	"IG/METER" and/or "RADIO/DOME" fuse(s) blown	Replace fuse(s) to check for short.
	VSS faulty	Check VSS.
	Printed plate in combination meter faulty	Check printed plate.
	Wiring or grounding faulty	Repair circuit.
	Signal rotor on differential case faulty	Check signal rotor.
	Speedometer faulty	Replace speedometer.

FUEL METER AND FUEL LEVEL SENSOR (GAUGE UNIT)

Condition	Possible Cause	Correction
Fuel meter shows no operation or incorrect operation	"IG/METER" fuse blown	Replace fuse to check for short.
	Fuel gauge unit faulty	Check fuel gauge unit.
	Printed plate in combination meter faulty	Check printed plate.
	Fuel meter faulty	Check fuel meter.
	Wiring or grounding faulty	Repair circuit.

ENGINE COOLANT TEMPERATURE (ECT) METER AND ECT SENSOR

Condition	Possible Cause	Correction
Engine coolant temp. meter shows no operation or incorrect operation	"IG/METER" fuse blown	Replace fuse to check for short.
	ECT meter faulty	Check ECT meter.
	Printed plate in combination meter faulty	Check printed plate.
	ECT sensor faulty	Check ECT sensor.
	Wiring or grounding faulty	Repair circuit.

OIL PRESSURE WARNING LIGHT

Condition	Possible Cause	Correction
Oil pressure warning light does not light up when turn the ignition switch to ON position at engine off	Bulb in combination meter blown	Replace bulb.
	"IG/METER" fuse blown	Replace fuse to check for short.
	Printed plate in combination meter faulty	Check printed plate.
	Oil pressure switch faulty	Check oil pressure switch.
	Wiring or grounding faulty	Repair circuit.
Oil pressure warning light stay on	Oil pressure switch faulty	Check oil pressure switch.

BRAKE AND PARKING BRAKE WARNING LIGHT

Condition	Possible Cause	Correction
Brake warning light does not light up (when fluid low level and/or parking brake pull up)	Bulb in combination meter blown	Replace bulb.
	Printed plate in combination meter faulty	Check printed plate.
	"IG/METER" fuse blown	Replace fuse to check for short.
	Brake fluid level switch faulty	Check brake fluid level switch.
	Parking brake switch faulty	Check parking brake switch.
	Wiring or grounding faulty	Repair circuit.
Brake warning light does not light up when cranking (when turned ignition switch to ST position)	Ignition switch faulty	Check ignition switch.
	Printed plate in combination meter faulty	Check printed plate.
	Wiring or grounding faulty	Repair circuit.
Brake warning light stay on	Brake fluid level switch and/or parking brake switch faulty	Check switch.

REAR WINDOW DEFOGGER

Condition	Possible Cause	Correction
Defogger does not operate	"REAR DEFG" fuse blown	Replace fuse to check for short.
	Heat wire faulty	Repair heat wire.
	Rear window defogger switch faulty	Check switch.
	Wiring or grounding faulty	Repair circuit.

WIPERS AND WASHERS

FRONT WIPER AND WASHER

REAR WIPER AND WASHER (IF EQUIPPED)

Condition	Possible Cause	Correction
Wiper malfunctions	"WIPER/WASHER" fuse blown	Replace fuse to check for short.
	Wiper motor faulty	Check wiper motor.
	Combination switch (wiper switch) faulty	Check wiper switch.
	Wiring or grounding faulty	Repair circuit.
Washer malfunctions	Washer hose or nozzle clogged	Clean or repair clogged hose or nozzle.
	"WIPER/WASHER" fuse blown	Replace fuse to check for short.
	Washer motor faulty	Check washer motor.
	Combination switch (wiper switch) faulty	Check wiper switch.
	Wiring or grounding faulty	Repair circuit.

POWER WINDOW CONTROL SYSTEM (IF EQUIPPED)

Condition	Possible Cause	Correction
All power windows do not operate	"POWER WINDOW" fuse blown	Replace fuse to check for short.
	Ignition switch faulty	Check ignition switch.
	Power window main switch faulty	Check power window main switch.
	Wiring or grounding faulty	Repair circuit.
Only one power window does not operate	Wiring and/or coupler faulty	Check wiring and/or coupler.
	Power window switch (main or sub) faulty	Check power window switch.
	Window actuator faulty	Check window actuator.
	Grounding faulty	Repair.

CIGARETTE LIGHTER

Condition	Possible Cause	Correction
Cigarette lighter shows no operation	"CIGAR" fuse blown	Replace fuse to check for short.
	Ignition switch faulty	Check ignition switch.
	Cigarette lighter faulty	Check cigarette lighter.
	Wiring or grounding faulty	Repair circuit.

POWER DOOR LOCK CONTROL SYSTEM (IF EQUIPPED)

Condition	Possible Cause	Correction
Power door(s) is (are) not locked/unlocked by driver side door key switch	"DOOR LOCK" fuse blown	Replace fuse to check for short.
	Ignition switch faulty	Check ignition switch.
	Driver's door knob switch faulty	Check driver's door knob switch.
	Door lock actuator faulty	Check door lock actuator.
	Wiring or grounding faulty	Repair circuit.
	Door lock controller faulty	Check controller.

KEYLESS ENTRY SYSTEM (IF EQUIPPED)

Condition	Possible Cause	Correction
Power door(s) is (are) not locked/unlocked by keyless entry transmitter	"DOOR LOCK" fuse blown	Replace fuse to check for short.
	Ignition switch faulty	Check ignition switch.
	Code registration error	Register code.
	Transmitter battery dead	Replace battery.
	Transmitter faulty	Check transmitter.
	Receiver faulty	Check receiver.
	Door lock controller faulty	Check controller.
	Wiring or grounding faulty	Repair circuit.

POWER DOOR MIRROR CONTROL SYSTEM (IF EQUIPPED)

Condition	Possible Cause	Correction
All power mirrors do not operate	"CIGAR" fuse blown	Replace fuse to check for short.
	Power door mirror switch faulty	Check switch.
	Wiring or grounding faulty	Repair circuit.
One power mirror does not operate	Power door mirror switch faulty	Check switch.
	Actuator (power door mirror motor) faulty	Check actuator.
	Wiring or grounding faulty	Repair circuit.

INTERIOR LIGHT

Condition	Possible Cause	Correction
Interior lights do not light up	Bulbs blown	Replace bulbs.
	"RADIO/DOME" fuse blown	Replace fuse to check for short.
	Interior light switch faulty	Check switch.
	Door switch faulty	Check switch.
	Wiring or grounding	Repair circuit.
One of interior light does not light up	Bulb blown	Replace bulb.
	Interior light switch faulty	Check switch.
	Door switch faulty	Check switch.
	Wiring or grounding	Repair circuit.

HORN

Condition	Possible Cause	Correction
Horn does not operate	"HORN/HAZARD" fuse blown	Replace fuse to check for short.
	Horn switch faulty	Check horn switch.
	Horn relay faulty	Check horn relay.
	Horn faulty	Replace horn.

IGNITION KEY REMAINDER (IF EQUIPPED) AND LIGHT REMAINDER WARNING BUZZER

Condition	Possible Cause	Correction
Ignition key remainder and light remainder warning buzzer shows no sounding	Buzzer faulty	Replace buzzer.
	Wiring or grounding faulty	Repair circuit.
	Driver side door switch faulty	Check door switch.
	Ignition switch faulty	Check ignition switch.

SEAT BELT WARNING LIGHT (IF EQUIPPED)

Condition	Possible Cause	Correction
Seat belt warning light does not light up	Bulb in combination meter blown	Replace bulb.
	"IG/METER" fuse blown	Replace fuse to check for short.
	Seat belt switch faulty	Check seat belt switch.
	Wiring or grounding faulty	Repair circuit.

FRONT SEAT HEATER (IF EQUIPPED)

Condition	Possible Cause	Correction
Both seat back and cushion do not become hot although seat heater switch is LO/HI position	"SEAT HTR" fuse blown	Replace fuse to check for short.
	Seat heater switch faulty	Check switch.
	Seat heater circuit in seat back and/or seat cushion faulty	Check heater front back and/or heater front cushion.
	Wiring or grounding faulty	Repair circuit.
Only seat back does not become hot although seat heater switch is HI position	Seat heater circuit in seat back faulty	Check heater front back.
	Seat heater switch faulty	Check switch.
	Wiring faulty	Repair.
Only seat cushion does not become hot although seat heater switch is HI position	Seat heater circuit in seat back and/or seat cushion faulty	Check heater front back and/or heater front cushion.
	Seat heater switch faulty	Check switch.
	Wiring faulty	Repair.

ON-VEHICLE SERVICE

CAUTIONS IN SERVICING

When performing works related to electric systems, observe the cautions described in GENERAL INFORMATION (Section 0A) of this manual for the purpose of protection of electrical parts and prevention of a fire from occurrence.

HEADLIGHT

HEADLIGHT SWITCH

REMOVAL AND INSTALLATION

Refer to "CONTACT COIL AND COMBINATION SWITCH ASSEMBLY" in Section 3C.

INSPECTION

Check for continuity between terminals at each switch position as shown below. If check result is not as specified, replace.

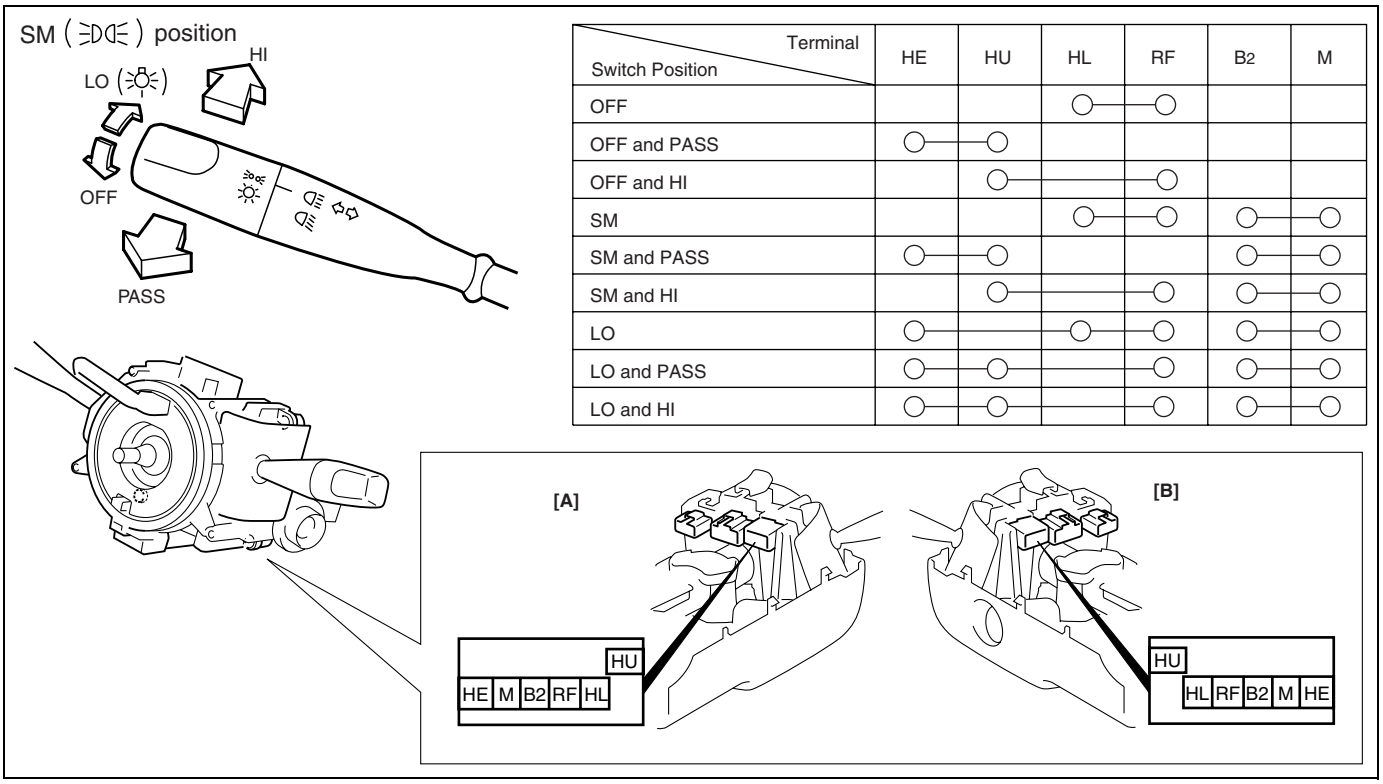

Terminal / Switch Position	HE	HU	HL	RF	B2	M
OFF			○	○		
OFF and PASS	○	○				
OFF and HI		○		○		
SM			○	○	○	○
SM and PASS	○	○			○	○
SM and HI		○		○	○	○
LO	○		○	○	○	○
LO and PASS	○	○		○	○	○
LO and HI	○	○		○	○	○

[A] : LH steering vehicle
[B] : RH steering vehicle

HEADLIGHT ASSEMBLY

REMOVAL

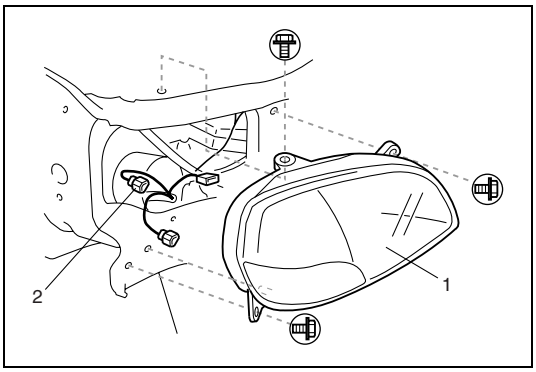

1) Disconnect negative cable at battery.
2) Remove front bumper. Refer to Section 9.
3) Remove headlight mounting bolts.
4) Detach headlight assembly (1) from vehicle.
5) Disconnect couplers (2) from headlight assembly (1).

INSTALLATION

Reverse removal procedure for installation.

HEADLIGHT BULB

REPLACEMENT

WARNING:

- **To avoid danger of being burned, don't touch when the bulb is hot.**
- **Don’t touch glass surface of bulb, to avoid deteriorate as the case may be unclear when bulb light on at dirty condition.**

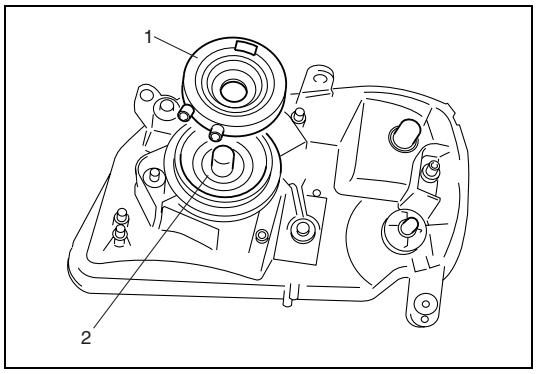

1) Disconnect negative cable at battery.
2) Disconnect coupler from bulb.
3) Remove socket cover (1).
4) Replace bulb (2) and assemble all removed parts.

HEADLIGHT AIMING ADJUSTMENT WITH SCREEN

NOTE:

- **Unless otherwise obligated by local regulations, adjust headlight aiming according to following procedure.**
- **After replacing headlight, be sure to adjust aiming.**

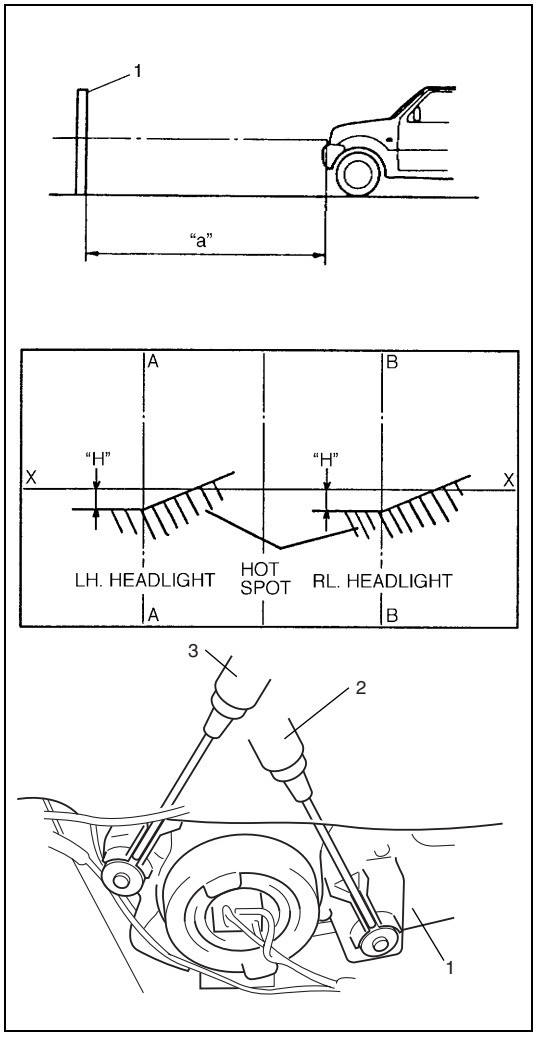

1) Make sure the following items.
   - Place vehicle on a flat surface in front of blank wall (screen) (1) ahead of headlight surface.

   Distance between screen and headlight
   "a" : 10 m (32.8 ft.)

   - Adjust air pressure of all tires to a specified value respectively.
   - Bounce vehicle body up and down by hand to stabilize suspension.
   - Carry out with one driver aboard.

   Driver's weight
   : 75 kg (165 lb)

2) Check to see if hot spot (high intensity zone) of each main (low) beam axis falls as shown in figure.

   Hot spot specification
   "H" : Approx. 130 mm (5.15 in.)

3) Align headlight aiming to specification by adjusting aiming screw and aiming gear if it is not set properly.

1.	Headlight assembly
2.	Aiming (for up/down adjustment)
3.	Aiming (for right/left and up/down adjustment)
X-X :	Horizontal center line of headlights bulb
A-A :	Vertical center line of left headlight bulb
B-B :	Vertical center line of right headlight bulb

HEADLIGHT LEVELING SWITCH (IF EQUIPPED)

INSPECTION

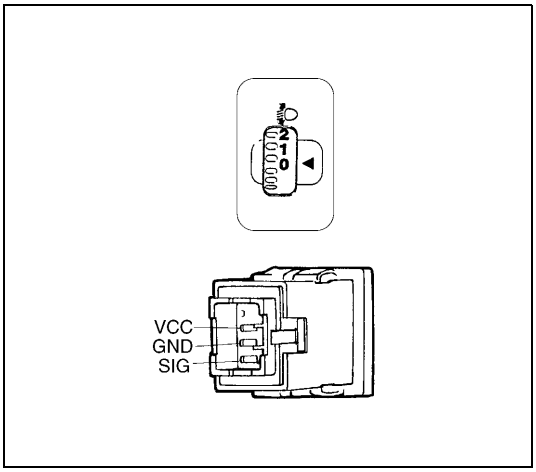

Check for resistance between terminals at each switch position as shown below. If check result is not as specified, replace.

Headlight leveling switch resistance

Position	Terminals	Resistance (KΩ)
–	VCC and GND	4.3 - 4.9
0	SIG and GND	3.7 - 4.1
1		3.1 - 3.4
2		2.4 - 2.7
3		1.7 - 2.0
4		1.1 - 1.3

TURN SIGNAL AND HAZARD WARNING LIGHTS

TURN SIGNAL LIGHT SWITCH

REMOVAL AND INSTALLATION

Refer to “CONTACT COIL AND COMBINATION SWITCH ASSEMBLY” in Section 3C.

INSPECTION

Check for continuity between terminals at each switch position as shown below. If check result is not as specified, replace.

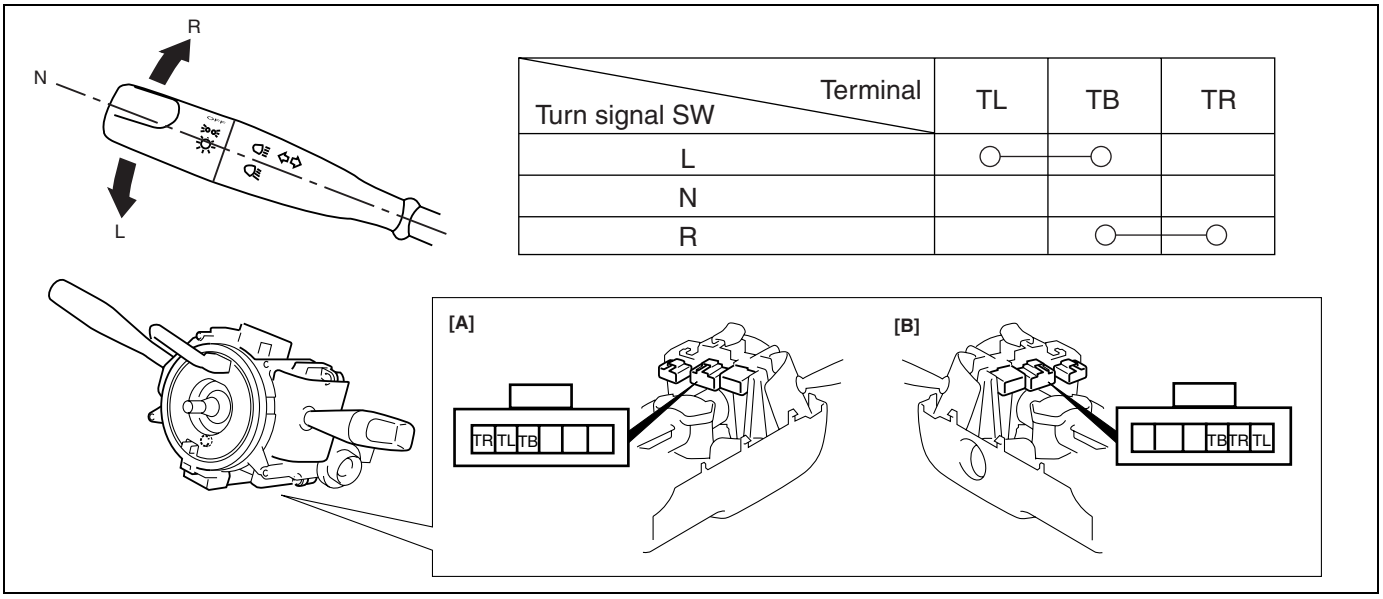

[A] : LH steering vehicle
[B] : RH steering vehicle

TURN SIGNAL AND HAZARD RELAY

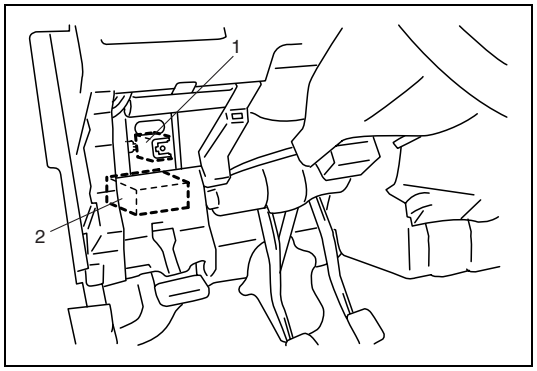

The turn signal and hazard relay (1) is located near the fuse box (2).

INSPECTION

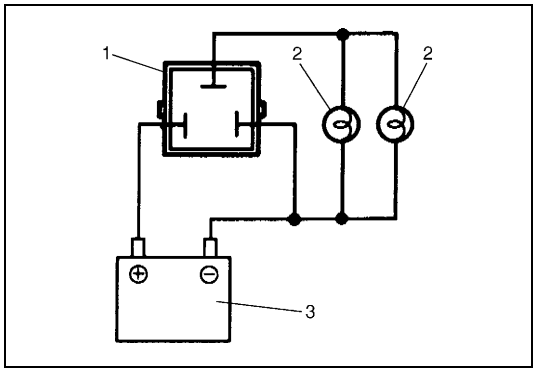

Connect turn signal and hazard relay (1), battery (3) and two test bulbs (12 V, 27 W) (2) as shown.
Unless a continued flash on and off is visible, replace.

Reference flashing cycle
: 60 - 120 cycle/minute

HAZARD SWITCH

INSPECTION

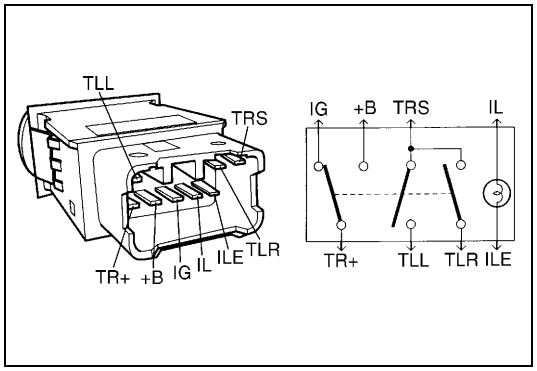

Check for continuity between terminals at each switch position as shown below. if check result is not as specified, replace.

Terminal / Hazard SW	+B	TR+	IG	TRS	TLL	TLR	IL	ILE
OFF		○—○					○—○—○	
ON	○—○			○—○—○			○—○—○	

FRONT FOG LIGHTS (IF EQUIPPED)

FRONT FOG LIGHT SWITCH

INSPECTION

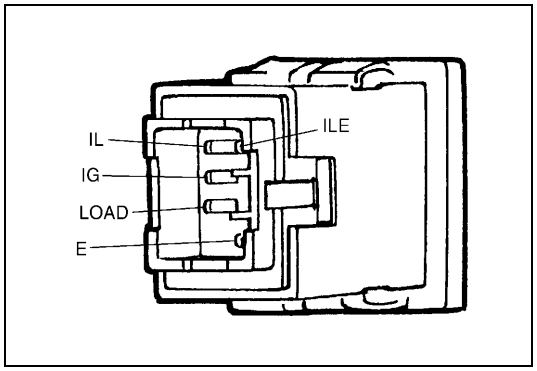

Check for continuity between terminals at each switch position as shown below. if check result is not as specified, replace.

Terminal / Switch Position	IG	LOAD	E	IL	ILE
OFF		○—○—○		○—○—○	
ON	○	○—○—○		○—○—○	

REAR FOG LIGHT (IF EQUIPPED)

REAR FOG LIGHT SWITCH

INSPECTION

Check for continuity between terminals. Hold the switch button (ON or OFF) pushed in during checking switch.

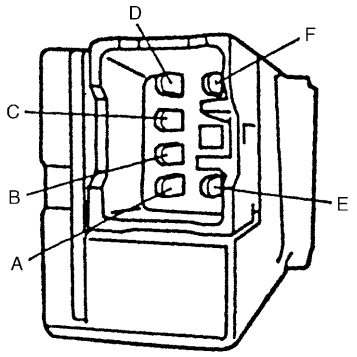

RR FOG SW \ TERMINAL / OFF SW		B	E	D	A	C	F
FREE	FREE						
	PUSH						
PUSH	FREE						
	PUSH						

NOTE:

Rear fog light lights up only when headlight (low or high beams) or front fog light switch (if equipped) is ON. Rear fog lights turns OFF automatically when headlight or front fog light switch is turned OFF.

IGNITION SWITCH

ON-VEHICLE INSPECTION

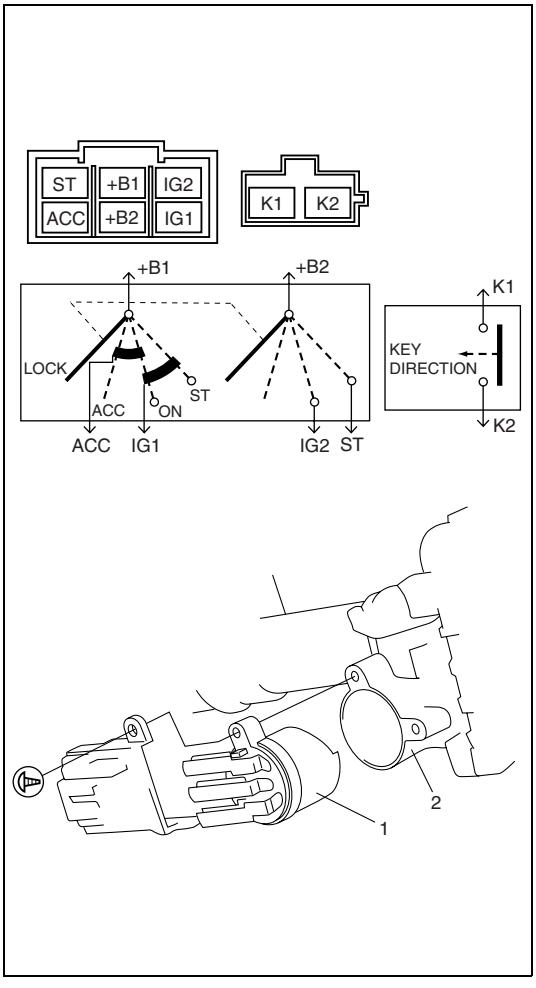

1) Disconnect negative cable at battery.
2) Remove steering column hole cover.
3) Remove steering column upper and lower cover.
4) Disconnect main harness couplers from ignition switch.
5) Check for continuity between terminals at each switch position as shown below. If check result is not as specified, replace.

Key \ Terminal / Position		+B1	+B2	+ACC	IG1	IG2	ST	K1	K2
OUT	LOCK								
IN									
	ACC								
	ON								
	START								

REMOVAL

1) Disconnect negative cable at battery.
2) Remove steering column hole cover.
3) Remove steering column upper and lower cover.
4) Disconnect main harness couplers from ignition switch (1).
5) Remove ignition switch (1) from key cylinder (2).

INSTALLATION

Reverse removal procedure for installation.

COMBINATION METER

CIRCUIT

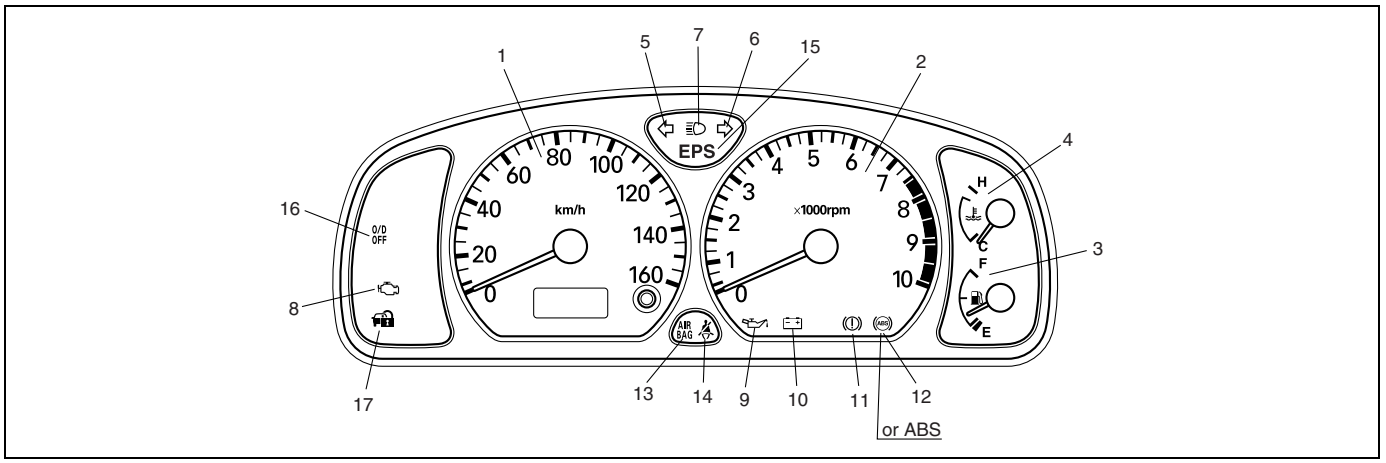

1. Speedometer	7. High beam light	13. "AIR BAG" warning light (if equipped)
2. Tachometer	8. Check engine light	14. Seat belt light (if equipped)
3. Fuel level meter	9. Oil pressure warning light	15. EPS warning light (if equipped)
4. Water temperature meter	10. Charge warning light	16. "O/D OFF" light (A/T vehicle only)
5. Turn signal pilot light (LH)	11. Brake warning light	17. Immobilizer warning light (if equipped)
6. Turn signal pilot light (RH)	12. ABS warning light (if equipped)	

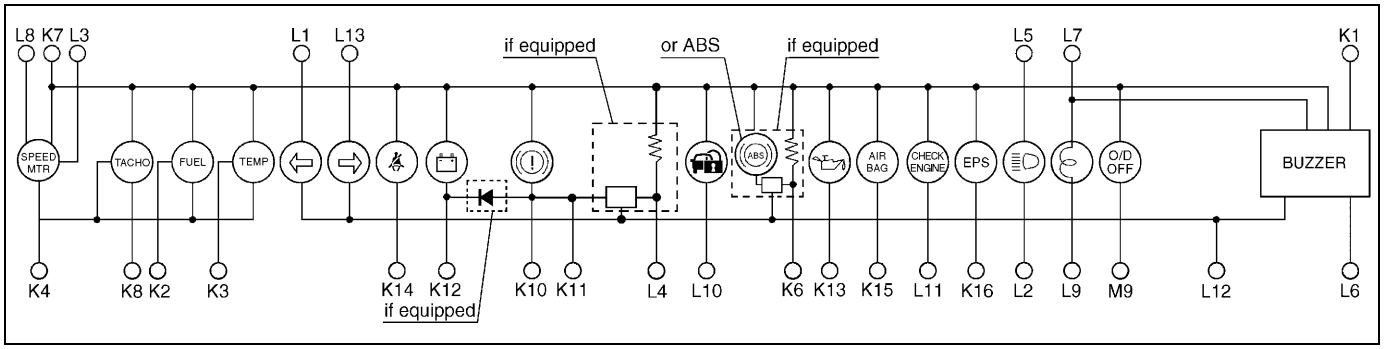

Terminal arrangement of coupler viewed from harness side

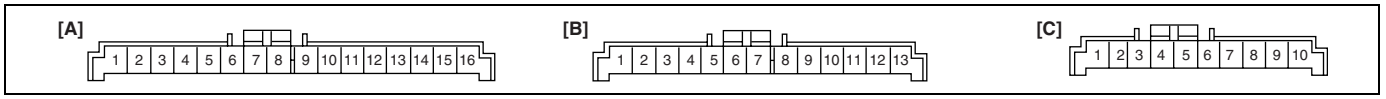

[A] : Connector K		[B] : Connector L		[C] : Connector M	
1. To ignition switch	BLU/YEL	1. To combination switch (turn L)	GRN/RED	1. Blank	–
2. To fuel level gauge	YEL/RED	2. To combination switch (dimmer switch)	RED	2. Blank	–
3. To ECT sensor	YEL/GRN	3. To VSS	PPL	3. Blank	–
4. To ground	BLK/ORN	4. To ABS control module	PNK/BLU	4. Blank	–
5. Blank	–	5. To main fuse	WHT/BLU	5. Blank	–
6. To ABS control module	RED/BLU	6. To door switch (driver side)	BLK/YEL	6. Blank	–
7. To ignition switch	BLK/WHT	7. To combination switch (dimmer switch)	RED/YEL	7. Blank	–
8. To ECM (if equipped)	BRN	8. To main fuse	WHT/RED	8. Blank	–
9. Blank	–	9. To ground	BLK	9. To TCM (for A/T vehicle)	BLU
10. To brake fluid level switch	RED/BLK	10. To ECM (if equipped)	PNK	10. Blank	–
11. To parking brake switch	BLK/RED	11. To ECM	PPL/WHT		
12. To generator	WHT/BLU	12. To ground	BLK		
13. To oil pressure switch	YEL/BLK	13. To combination switch (turn R)	BLU/YEL		
14. To seat belt switch	BRN/YEL				
15. To SDM (if equipped)	YEL/BLK				
16. To EPS (if equipped)	YEL				

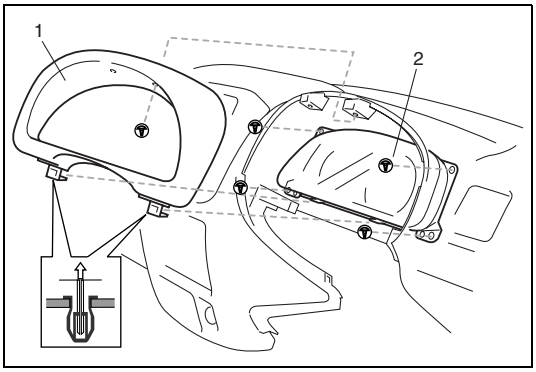

REMOVAL

1) Disconnect negative cable at battery.
2) Loosen steering column mounting nuts. Refer to Section 3C.
3) Remove meter cluster panel (1).
4) Disconnect all couplers from combination meter, then remove combination meter (2).

INSTALLATION

Reverse removal procedure for installation.

INSPECTION

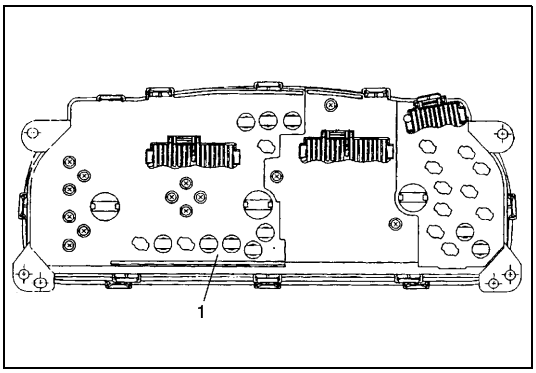

Check printed plate (1) visually for scratch, crack and discoloration.
If any of such faulty conditions is found, replace the printed plate (1).

FUEL METER AND FUEL LEVEL SENSOR (GAUGE UNIT)

FUEL LEVEL METER

INSPECTION

Operation check

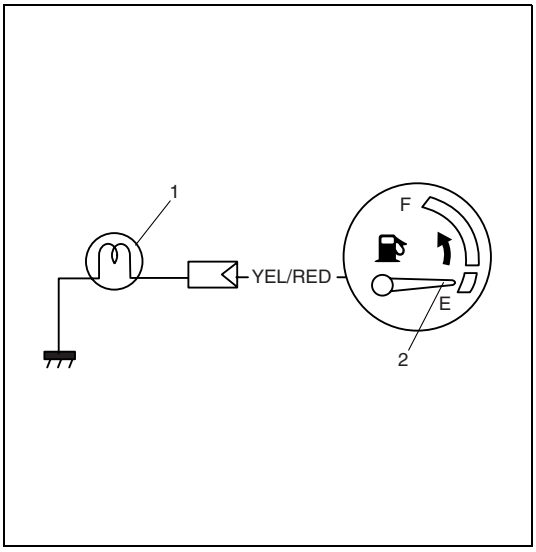

1) Remove combination meter. Refer to “COMBINATION METER”.
2) Remove “YEL/RED” wire terminal from combination meter connector and reconnect combination connectors to combination meter.
3) Turn ignition switch ON, and check that pointer (2) of fuel meter indicates “E”.
4) Turn ignition switch OFF.
5) Short “YEL/RED” wire terminal to body ground through a 3.4 W bulb (1) as shown in figure.
6) Turn ignition switch ON, and check that bulb light up and pointer (2) of meter moves from “E” to “F”.
   If check result is not satisfied, replace.

FUEL LEVEL SENSOR (GAUGE UNIT)

REMOVAL

Remove fuel pump assembly (1) referring to Section 6C.

INSTALLATION

Install fuel pump assembly (1) referring to Section 6C.

INSPECTION

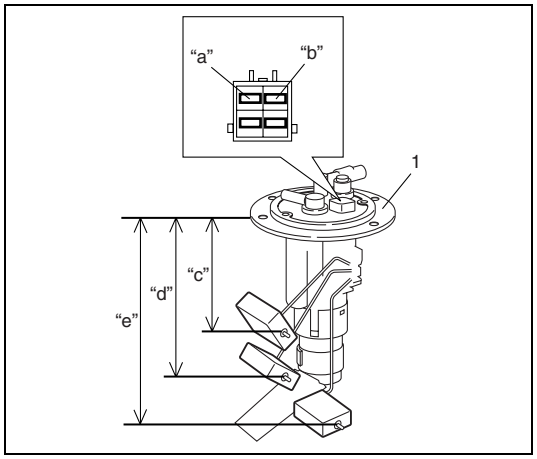

- Check that resistance between terminals "a" and "b" of fuel level sensor changes with change of float position.
- Check resistance between terminals "a" and "b" in each float position below.
  If the measured value is out of specification, replace.

Fuel level sensor specification

Float Position		Resistance (Ω)
Full Upper "c"	59.6 mm (2.35 in.)	2 - 4
Middle (1/2) "d"	121.6 mm (4.79 in.)	29.5 - 35.5
Full Lower "e"	202.3 mm (7.96 in.)	119 - 121

SPEED METER AND VSS

VSS

REMOVAL AND INSTALLATION

Refer to "VSS" in Section 6E1.

ENGINE COOLANT TEMPERATURE (ECT) METER AND SENSOR

ENGINE COOLANT TEMPERATURE (ECT) METER

INSPECTION

Operation check

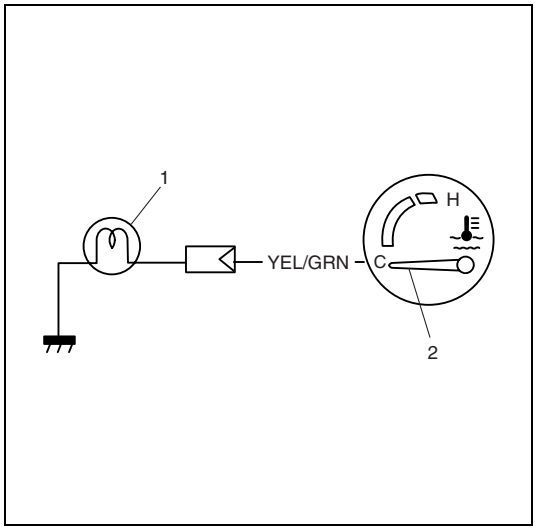

1) Remove combination meter. Refer to "COMBINATION METER".
2) Remove "YEL/GRN" wire terminal from combination meter connector and reconnect combination connectors to combination meter.
3) Turn ignition switch ON, and check that pointer (2) of ECT meter indicates "C" as shown in figure.
4) Ignition switch OFF.
5) Short "YEL/GRN" wire terminal to body ground through a 3.4 W bulb (1) as shown in figure.
6) Turn ignition switch ON, and check that bulb light up and pointer (2) of meter moves from "C" to "H".
   If check result is not satisfied, replace.

ECT SENSOR

REMOVAL, INSTALLATION AND INSPECTION

Refer to “ECT SENSOR” in Section 6E1.

OIL PRESSURE WARNING LIGHT

OIL PRESSURE SWITCH

ON-VEHICLE INSPECTION

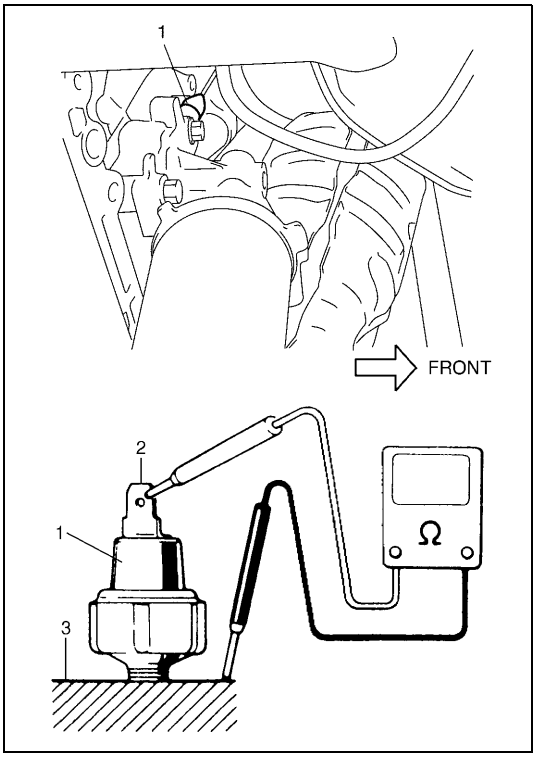

1) Disconnect oil pressure switch (1) lead wire.
2) Check for continuity between oil pressure switch terminal (2) and cylinder block (3) as shown in figure.
   If not, replace oil pressure switch (1).

Oil pressure switch specification
During engine running : No continuity
At engine stop : Continuity

REMOVAL AND INSTALLATION

Refer to “OIL PRESSURE CHECK” in Section 6A1.

BRAKE FLUID LEVEL AND PARKING BRAKE WARNING LIGHT

BRAKE FLUID LEVEL SWITCH

INSPECTION

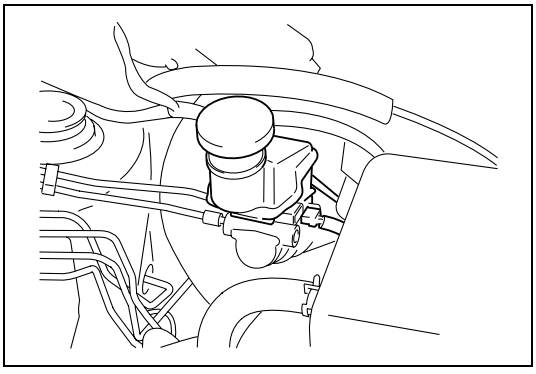

Check for continuity between terminals of brake fluid level switch coupler.
If found defective, replace switch.

Brake fluid level switch specification
OFF position (float up) : No continuity
ON position (float down) : Continuity

PARKING BRAKE SWITCH

INSPECTION

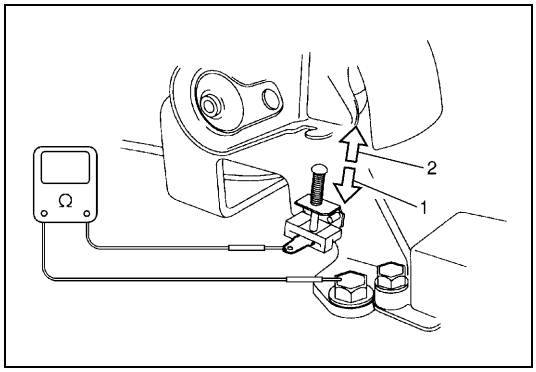

Check for continuity between parking brake switch terminal and body ground as shown in figure.
If found defective, replace switch.

Parking brake switch specification
OFF position (parking brake released) (1) :
No continuity
ON position (parking brake lever pulled up) (2) :
Continuity

REAR WINDOW DEFOGGER

DEFOGGER SWITCH

INSPECTION

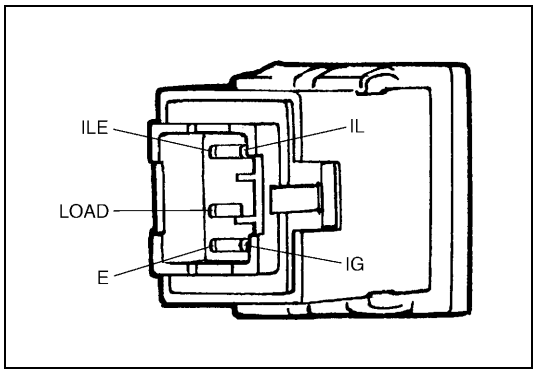

Check for continuity between terminals at each switch position as shown below. If check result is not satisfied, replace.

Terminal / SwitchPosition	IG	LOAD	E	IL	ILE
OFF		○—○	○	○—○	
ON (PUSH IN)	○	○—○	○		

DEFOGGER WIRE

INSPECTION

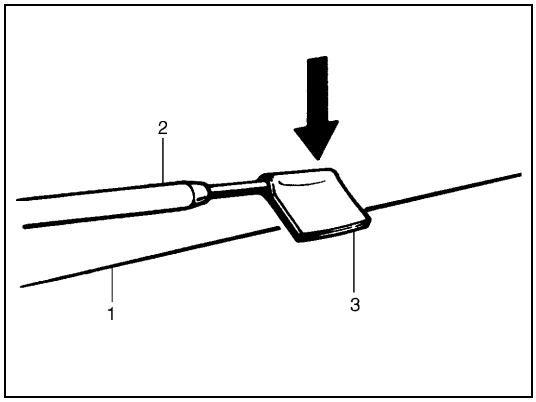

NOTE:

- **When cleaning rear window glass, use a dry cloth to wipe it along heat wire (1) direction.**
- **When cleaning glass, do not use detergent or abrasive-containing glass cleaner.**
- **When measuring wire voltage, use a tester with negative probe (2) wrapped with a tin foil (3) which should be held down on wire by finger pressure.**

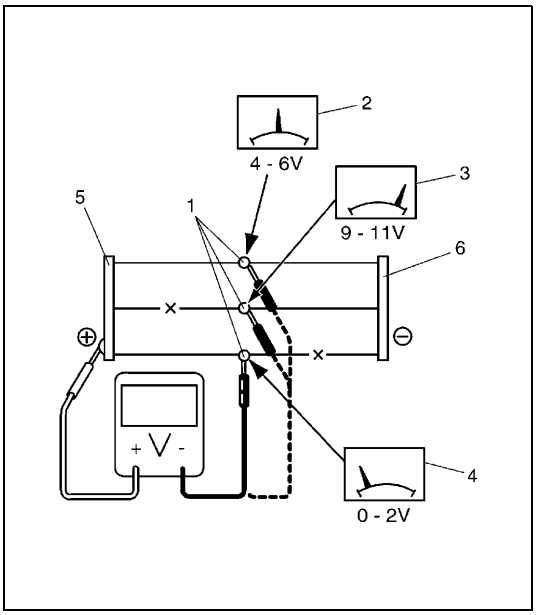

- Wire damage inspection.

a) Turn ignition switch ON.
b) Turn defogger switch ON.
c) Check voltage at the center (1) of each heat wire as shown below.
   If measured voltage is 10 V, wire must be damaged between its center and positive end (5).
   If voltage is 0 V, wire must be damaged between its center and ground end (6).

Voltage	Criteria
Approx. 4 - 6 V (2)	Good (No break in wire)
Approx. 9 - 11 V (3) or 0 - 2 V (4)	Broken wire

X : Damage point

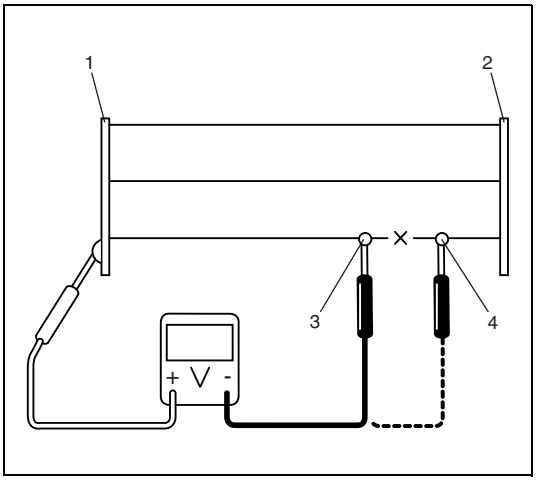

- Damage point locating.

a) Turn ignition switch ON.
b) Turn defogger switch ON.
c) Touch voltmeter positive (+) lead to heat wire positive terminal end (1).
d) Touch voltmeter negative (-) lead with a foil strip to heat wire positive terminal end (1), then move it along wire to the negative terminal end (2).
e) The place where voltmeter fluctuates from 0 - 2 V (3) to several volts (4) is where there is damage.

X : Damage point

REPAIR

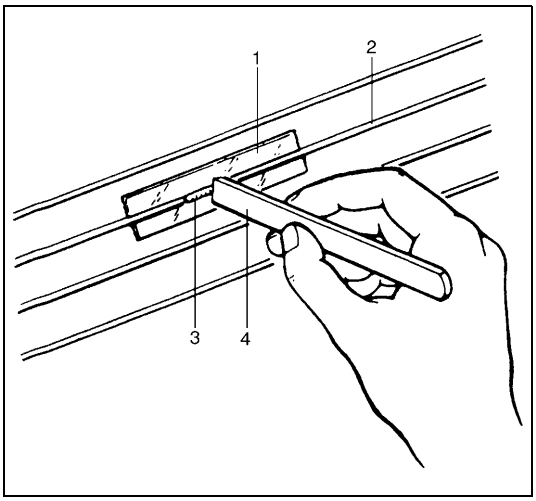

1) Use white gasoline for cleaning.
2) Apply masking tape (1) at both upper and lower sides of heat wire (2) to be repaired.
3) Apply commercially-available repair agent (3) with a fine-tip brush (4).
4) 2 to 3 minutes later, remove masking tapes (1).
5) Leave repaired heat wire as it is for at least 24 hours before operating rear defogger again.

WIPERS AND WASHERS

COMPONENTS

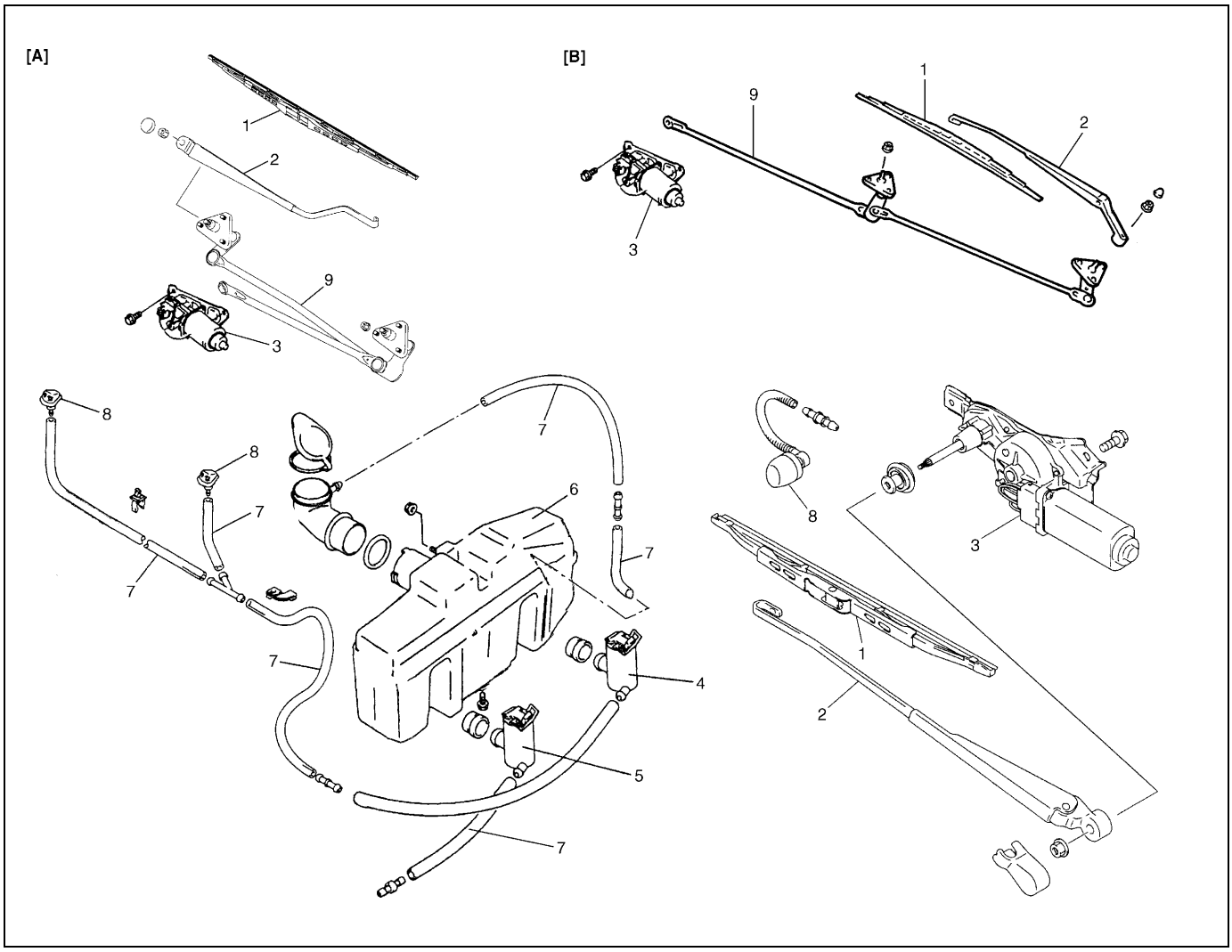

[A] : RH steering vehicle	3. Wiper motor	7. Washer hose
[B] : LH steering vehicle	4. Washer pump (for front washer)	8. Washer nozzle
1. Wiper blade	5. Washer pump (for rear washer)	9. Wiper link
2. Wiper arm	6. Washer tank	

FRONT WIPER AND WASHER SWITCH

REMOVAL AND INSTALLATION

Refer to “CONTACT COIL AND COMBINATION SWITCH ASSEMBLY” in Section 3C.

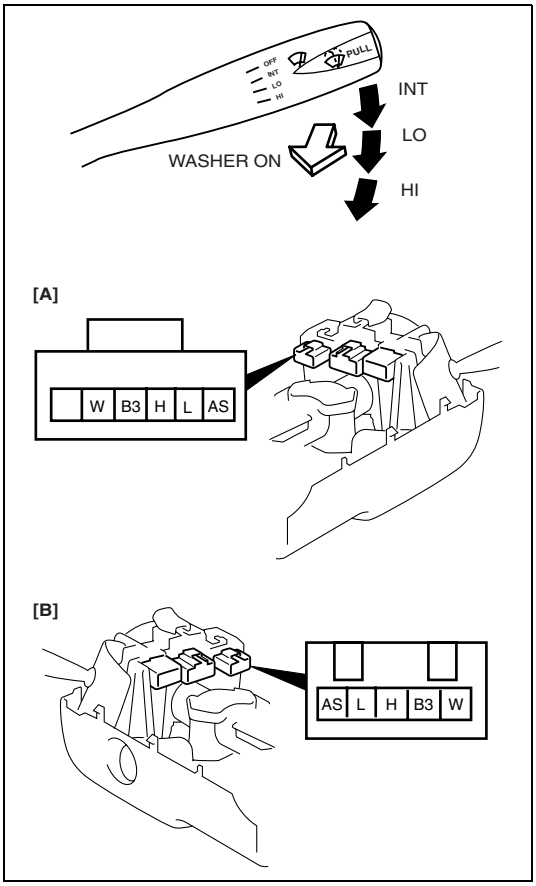

INSPECTION

Check for continuity between terminals at each switch position as shown below.
If check result is not as specified, replace.

Wiper SW \ Terminal	B3	H	L	AS
OFF			○	○
INT			○	○
LO	○		○	
HI	○	○		

Washer SW \ Terminal	B3	W
OFF		
ON	○	○

[A] : LH steering vehicle
[B] : RH steering vehicle

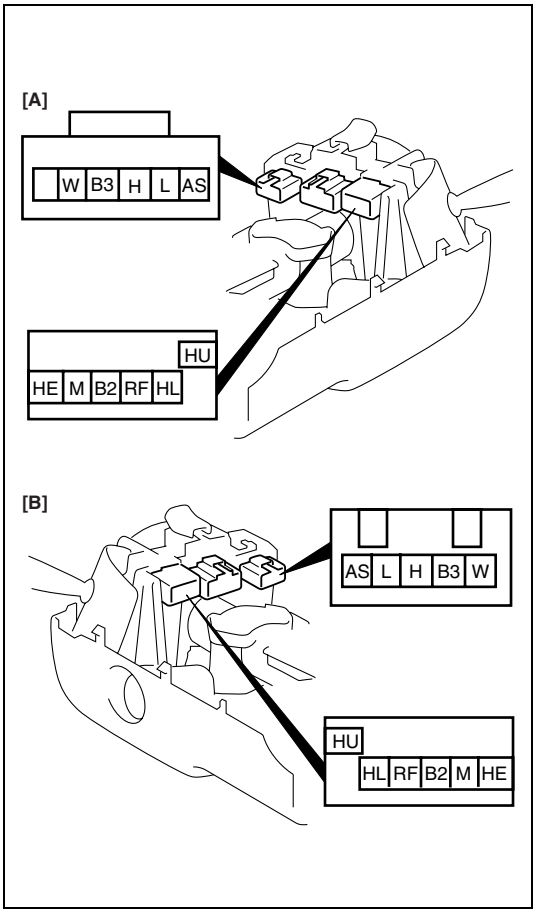

INTERMITTENT WIPER RELAY CIRCUIT INSPECTION

1) Turn the front wiper switch to “INT” position.
2) Connect battery positive terminal to terminal “B3” and its negative terminal to terminal “HE”
3) Connect voltmeter positive lead to terminal “H” and its negative lead to terminal “HE”.
4) Check that the voltmeter indicates the battery voltage (10 - 14 V).
5) Connect terminal “AS” and terminal “B3” by a jumper wire.
6) When “B3” and “HE” are shorted by other jumper wire, check that voltage changes as shown in figure.
   If check result is not satisfied, replace.

[A] : LH steering vehicle
[B] : RH steering vehicle

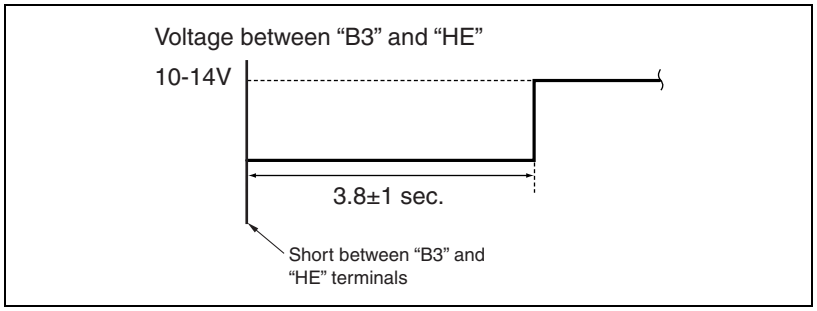

WASHER LINKED CIRCUIT INSPECTION

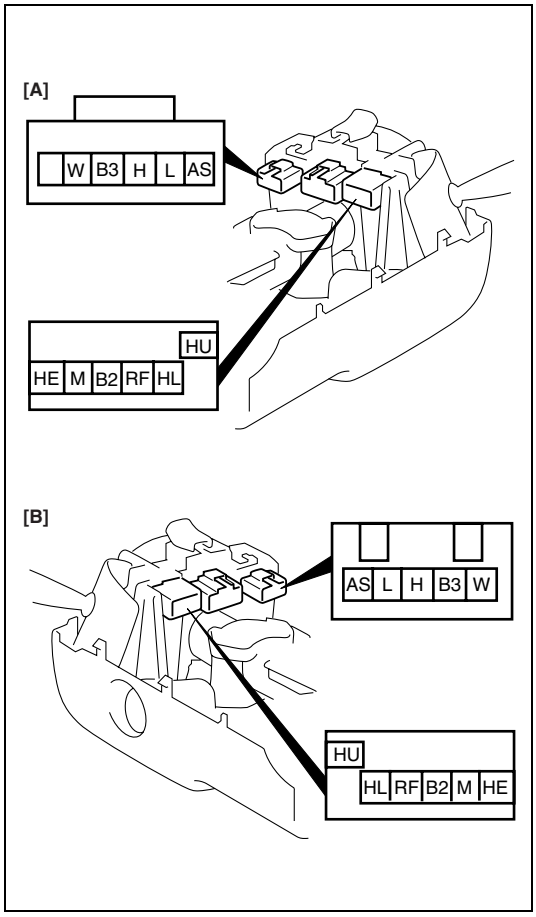

1) Make sure that front wiper switch is at “OFF” position.
2) Connect battery positive terminal to terminal “B3” and its negative terminal to terminal “HE”.
3) Connect voltmeter positive lead to terminal “H” and its negative lead to terminal “HE”.
4) When front washer switch is ON (pushed to forward), check that voltage changes as shown in figure.

[A] : LH steering vehicle
[B] : RH steering vehicle

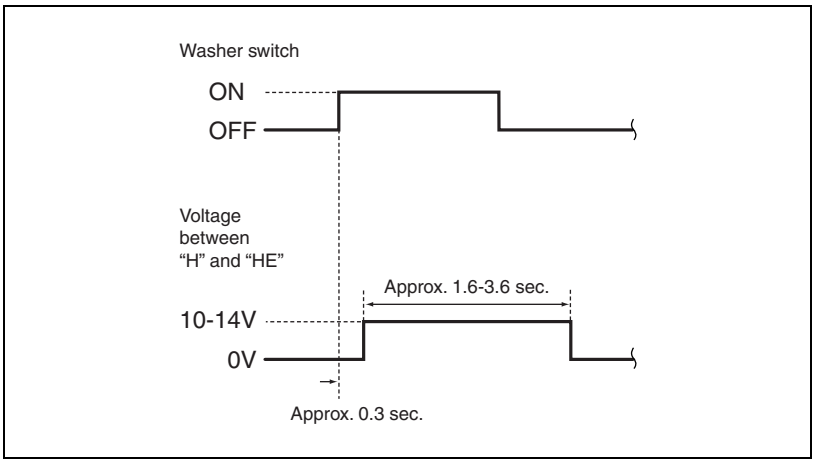

FRONT WIPER MOTOR

INSPECTION

Motor Operation (Low Speed)

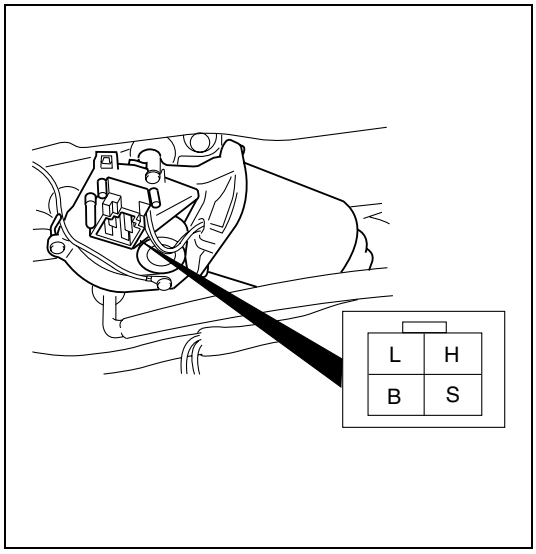

1) Connect battery positive terminal to terminal “L” and its negative terminal to motor bracket (wiper ground).
2) Check motor revolution speed as specification.

Front wiper motor specification (at low speed)
: 44 - 52 r/min (rpm)

Motor Operation (High Speed)

1) Connect battery positive terminal to “H” and its negative terminal to motor bracket (wiper ground).
2) Check motor revolution speed as specification.

Front wiper motor specification (at high speed)
: 64 - 78 r/min (rpm)

Automatic Stop Operation

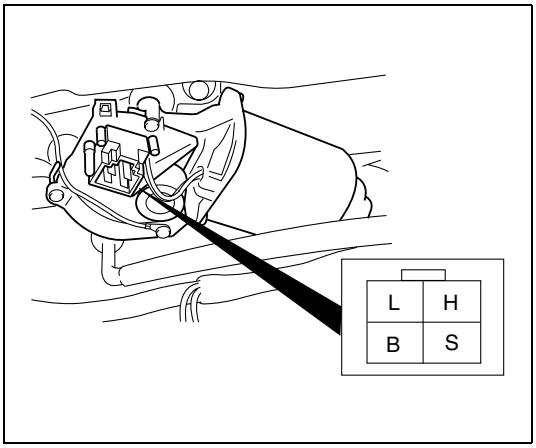

1) Connect battery positive terminal to terminal “L” and its negative terminal to motor bracket (wiper ground) and let the motor turn.
2) Disconnect terminal “L” from battery positive terminal, and let the motor stop.
3) Connect terminal “L” and “S” with a jumper wire, and connect terminal “B” to battery positive terminal. Observe the motor turns once again then stops at a specified position.
4) Repeat Step 1) to 3) several times and check that the motor stops at the specified position every time.
   If check result is not satisfied, replace.

WASHER TANK AND WASHER PUMP

REMOVAL

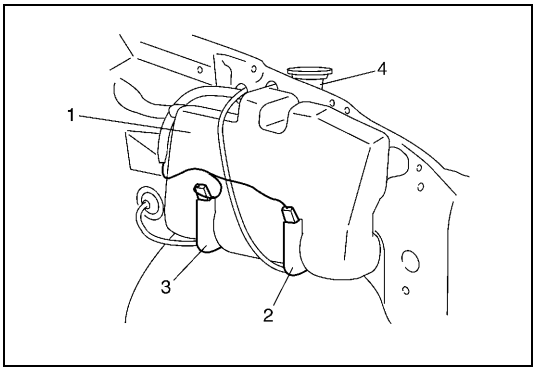

1) Disconnect negative cable at battery.
2) Remove front fender lining (RH).
3) Remove washer tank attaching nuts and inlet pipe (4).
4) Disconnect pump lead wire coupler(s) and hoses.
5) Remove washer tank (1).
6) Remove front washer pump (2) and rear washer pump (3) (if equipped) from washer tank (1).

INSTALLATION

Reverse removal procedure for installation.

INSPECTION

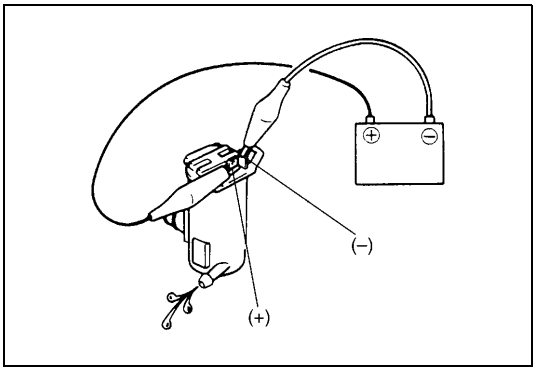

1) Connect battery (+) and (-) terminals to pump (+) and (-) terminals respectively.
2) Check motor operation for both front and rear (if equipped) washer pump.

REAR WIPER AND WASHER SWITCH (IF EQUIPPED)

INSPECTION

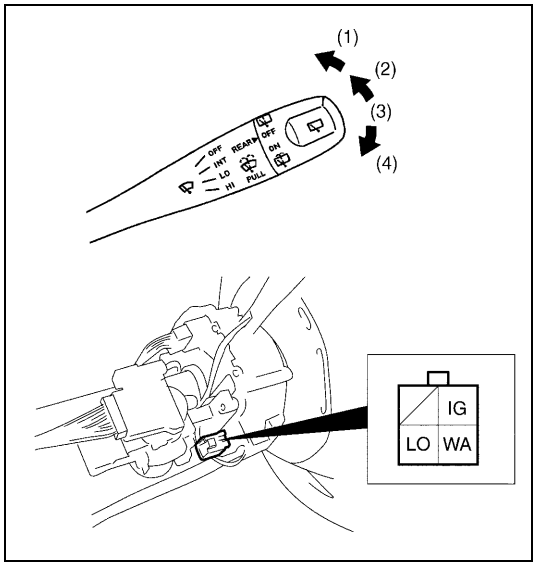

Check for continuity between terminals at each switch position as shown below.
If check result is not as specified, replace.

Position \ Terminal	IG	LO	WA
(1) WIPER and WASHER ON	○	○	○
(2) WIPER ON	○	○	
(3) OFF			
(4) WASHER and WASHER ON	○	○	○

REAR WIPER MOTOR

INSPECTION

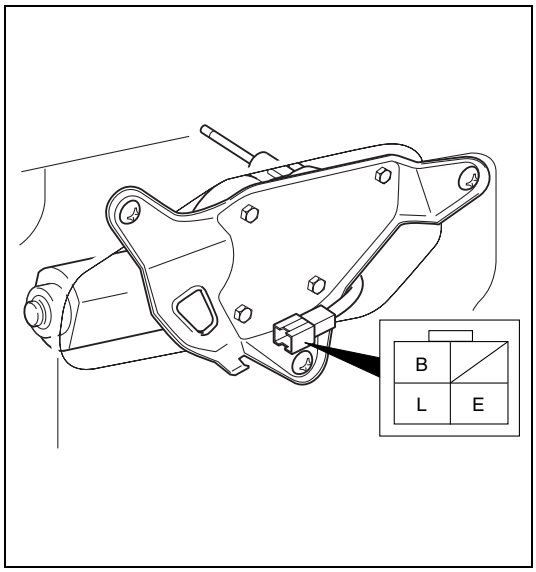

Wiper Motor

Use a 12 V battery to connect its (+) and (-) terminals to terminal "L" and terminal "E" respectively. Then motor should rotate at 35 to 45 rpm.

Automatic Stop Operation

1) Connect battery positive terminal to terminal "L" and its negative terminal to terminal "E" and let the motor turn.
2) Disconnect terminal "L" from battery positive terminal and let the motor stop.
3) Connect terminal "B" to battery positive terminal. Observe the motor turns once again then stops at a specified position.
4) Repeat Step 1) to 3) several times, and check that the motor stops at the specified position every time.

IGNITION KEY REMAINDER (IF EQUIPPED) AND LIGHT REMAINDER WARNING BUZZER

REMOVAL

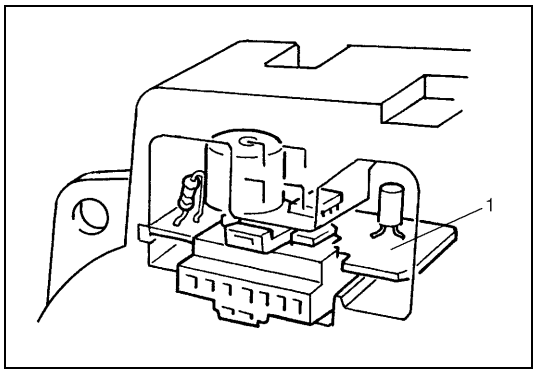

1) Remove combination meter. Refer to "COMBINATION METER".
2) Remove buzzer unit (1) from combination meter.

INSTALLATION

Reverse removal procedure for installation.

POWER WINDOW CONTROL SYSTEM (IF EQUIPPED)

POWER WINDOW MAIN SWITCH

INSPECTION

Check for continuity between terminals at each switch position as shown below. If check result is not as specified, replace.

Window Lock Switch (1)		Driver Side Window Switch (2)				Passeger Side Window Switch (3)				Rear RH Window Switch (4)				Rear LH Window Switch (5)			
	TYPE 1	B	E	FLU	FLD	B	E	FRU	FRD	—	—	—	—	—	—	—	—
	TYPE 2			FRU	FRD			FLU	FLD								
	TYPE 3			FLU	FLD			FRU	FRD	B	E	RRU	RRD	B	E	RLU	RLD
	TYPE 4			DU	DD			PU	PD	—	—	—	—	—	—	—	—
OFF	UP	○	○	○	○	○	○	○	○	○	○	○	○	○	○	○	○
	OFF		○	○	○		○	○	○		○	○	○		○	○	○
	DOWN	○	○	○	○	○	○	○	○	○	○	○	○	○	○	○	○
ON	UP	○	○	○		○	○	○		○	○	○		○	○	○	
	OFF		○	○	○			○	○			○	○			○	○
	DOWN	○	○	○	○	○	○	○	○	○	○	○	○	○	○	○	○

[A] : TYPE 1 (LH steering vehicle)
[B] : TYPE 2 (RH steering vehicle)
[C] : TYPE 3
[D] : TYPE 4

[A]

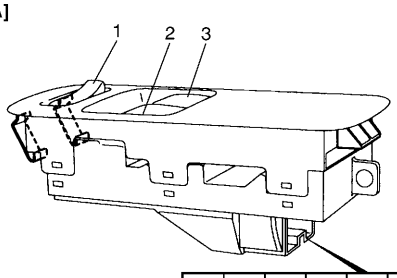

		E	B		
FLU	FLD			FRU	FRD

[B]

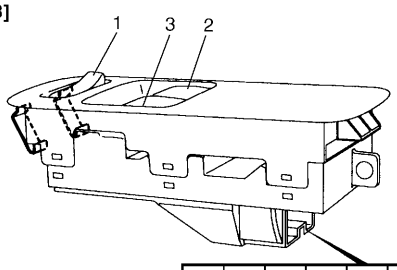

		E	B		
FLU	FLD			FRU	FRD

[C]

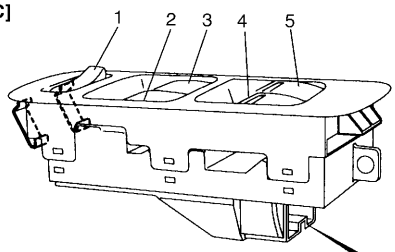

RLU	RLD	E	B	RRU	RRD
FLU	FLD			FRU	FRD

[D]

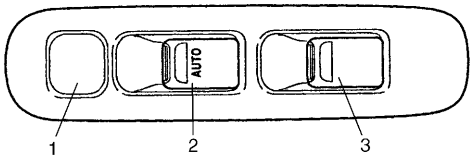

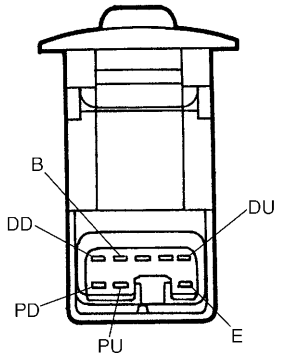

POWER WINDOW SUB SWITCH

INSPECTION

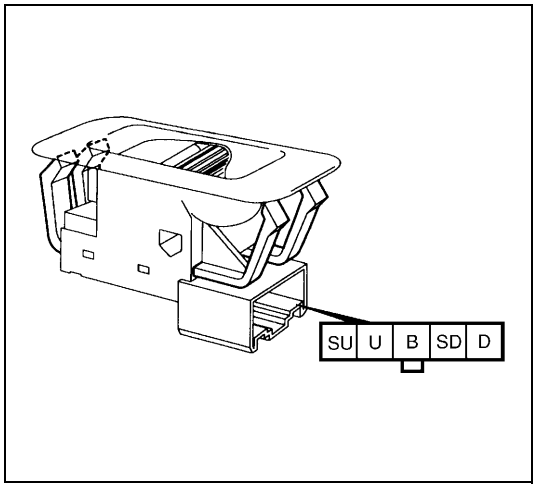

Check for continuity between terminals at each switch condition as shown below.
If check result is not as specified, replace.

Switch Position \ Terminal	B	SD	SU	D	U
UP	○	○		○	○
OFF		○	○	○	○
DOWN	○		○	○	○

DOOR SWITCH

INSPECTION

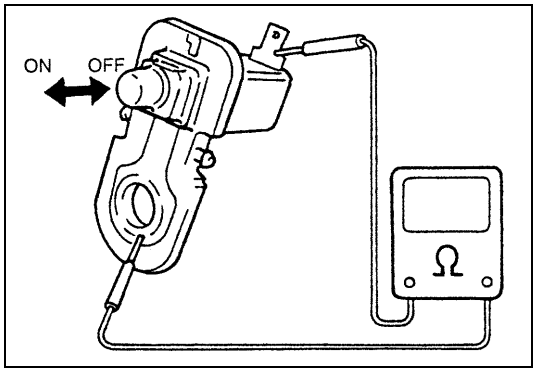

Remove door switch from body and check switch for continuity.
If found detective, replace switch.

Door switch specification

OFF position (Door closed)	No continuity
ON position (Door open)	Continuity

STOP LAMP (BRAKE) SWITCH

INSPECTION

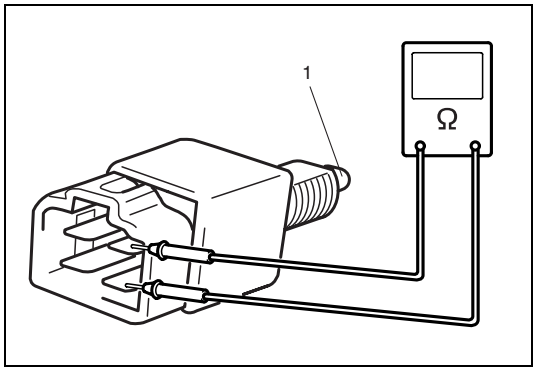

Check stop lamp (brake) switch for continuity as shown in figure.
If found detective, replace switch.

Stop lamp (brake) switch specification
Switch slider (1) pushed ON : No continuity
Switch slider (1) released OFF : Continuity

POWER DOOR LOCK SYSTEM (IF EQUIPPED)

DOOR LOCK CONTROLLER

INSPECTION

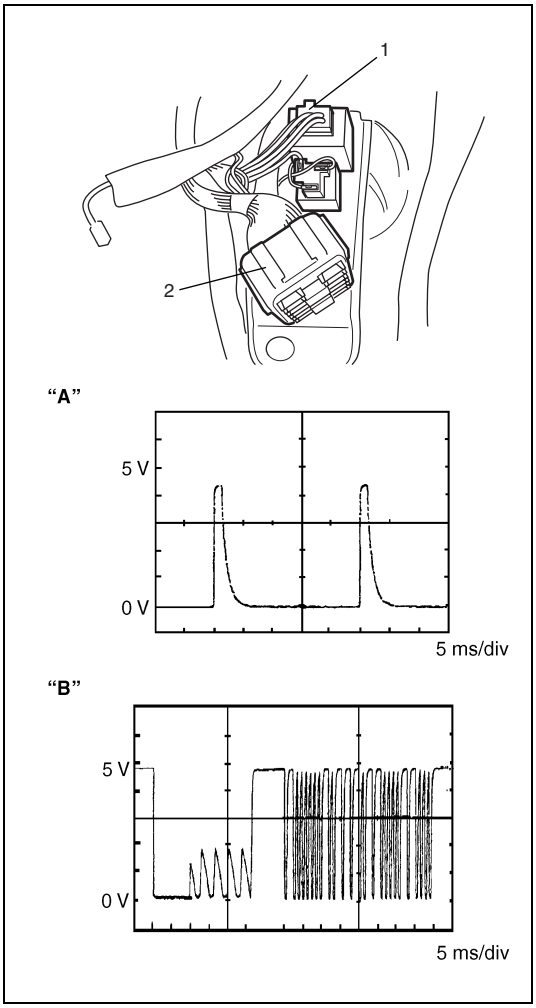

Check voltage between each terminal and body ground with connecting controller coupler.
If check result is not as specified, replace.

Door lock controller specification

Terminal	Voltage (V)	Condition
B	10 - 14	–
L	10 - 14	"LOCK" position
	0 - 1	Other position than "LOCK"
UL	10 - 14	"UNLOCK" position
	0 - 1	Other position than "UNLOCK"
ULS	0 - 1	"UNLOCK" position
	"A" (Refer to the figure.)	"LOCK" position
KL	"B" (Refer to the figure.)	Approx. 75 ms while "LOCK" position or "UNLOCK" position signal received
	5	Other condition than above mentioned
E	0	Always

1. Door lock controller
2. Fuse box

DRIVER'S DOOR KNOB SWITCH

ON-VEHICLE INSPECTION

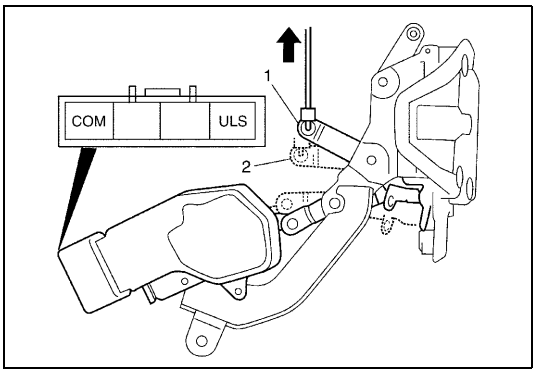

1) Remove driver's door trim and disconnect door lock switch coupler.
2) Check for continuity between "ULS" terminal and "COM" terminal at each switch condition.

Driver's door knob switch specification
UNLOCK position (1) : Continuity
LOCK position (2) : No continuity

DOOR LOCK ACTUATOR

ON-VEHICLE INSPECTION

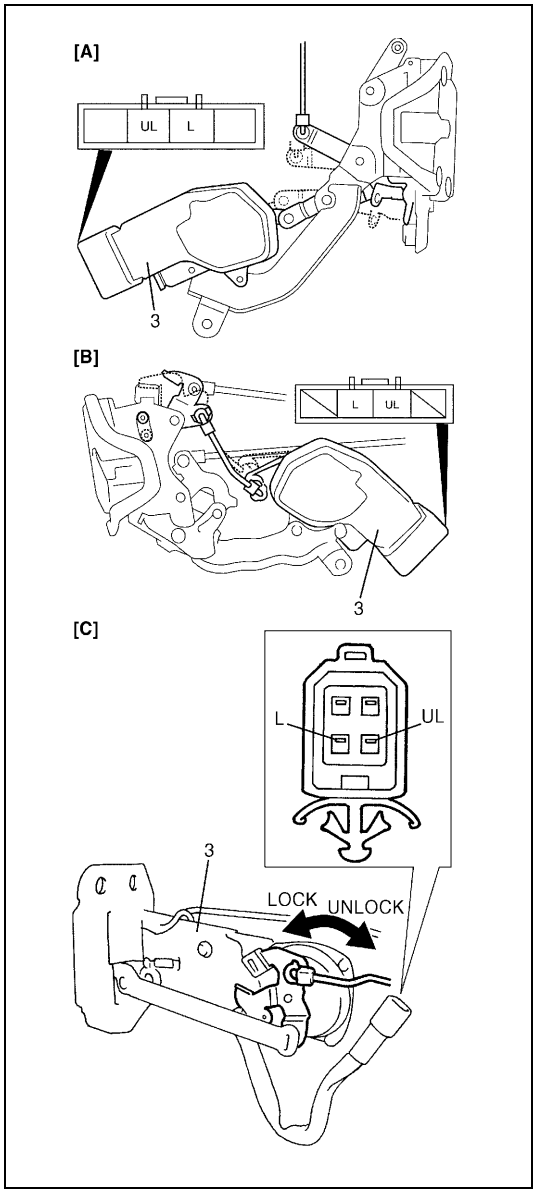

1) Remove door trim (front, rear or back) and disconnect door lock actuator (3) coupler.
2) Connect battery (+) terminal to terminal “L” and (-) terminal to terminal “UL”. Check that door lock actuator (3) is on “LOCK” position.
   If check result is not satisfied, replace.
3) Connect battery (+) terminal to terminal “UL” and (-) terminal to terminal “L”. Check that door lock actuator (3) is on “UNLOCK” position.
   If check result is not satisfied, replace.

[A] : FRONT DOOR
[B] : REAR DOOR
[C] : BACK DOOR

KEYLESS ENTRY SYSTEM (IF EQUIPPED)

DOOR LOCK CONTROLLER

INSPECTION

Refer to DOOR LOCK CONTROLLER of POWER DOOR LOCK SYSTEM (IF EQUIPPED) in this section.

DOOR LOCK ACTUATOR

INSPECTION

Refer to DOOR LOCK ACTUATOR of POWER DOOR LOCK SYSTEM (IF EQUIPPED) in this section.

RECEIVER

INSPECTION

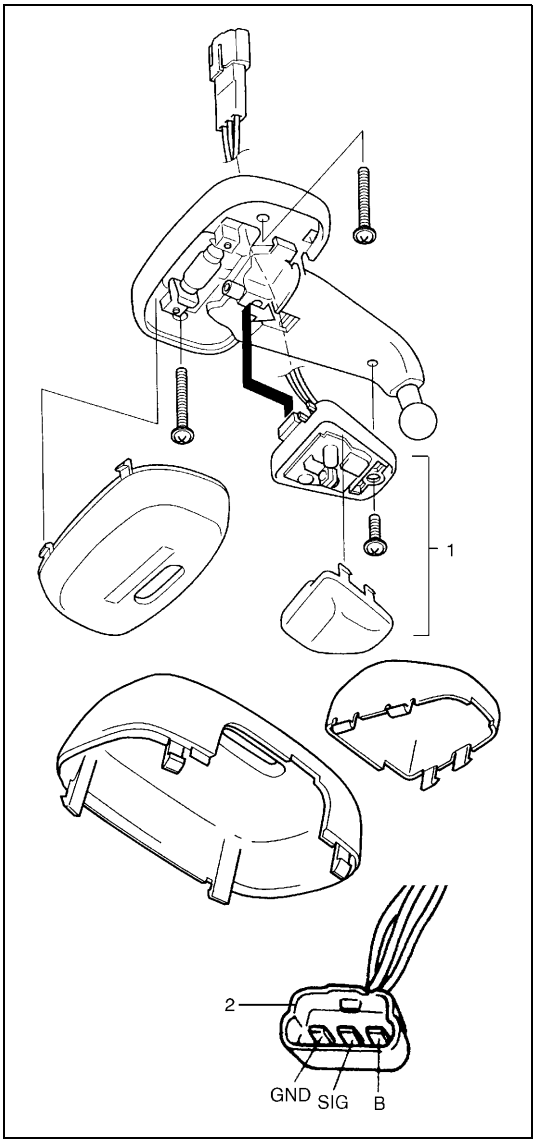

Check voltage between each terminal and body ground with connecting controller coupler. If check result is not as specified, replace.

Receiver specification

Terminal	Voltage (V)	Condition
B	10 - 14	Always
SIG	"A" (Refer to the figure)	Approx. 75 ms while transmitter signal received
	5	Other condition than above mentioned
GND	0	Always

Reference :

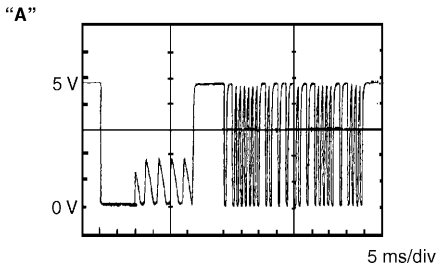

1. Receiver
2. Receiver coupler (receiver side)

TRANSMITTER

REPLACEMEMT OF THE BATTERY

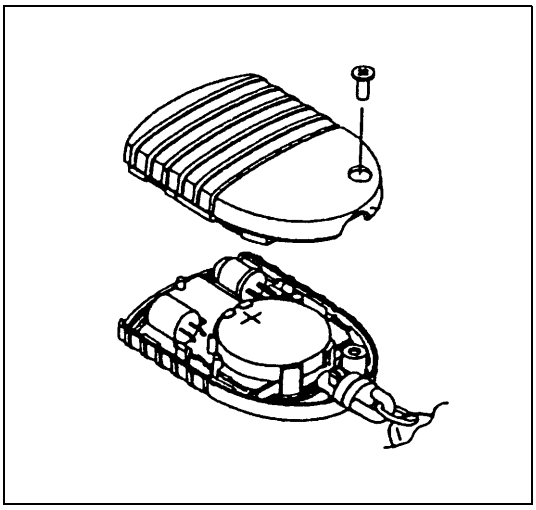

If the transmitter becomes unreliable, replace the battery.
As the battery power is consumed, the operation distance will be shorter.

1) Remove screw.
2) Use a small coin or flat blade screwdriver to separate the bottom half from the top half of the transmitter.
3) Replace the battery with the new one. Make sure the positive (+) side of battery faces up. For battery replacement, use type CR2032 or equivalent.
4) Put the two halves back together and install a screw.
5) Make sure the door locks can be operated with the transmitter.

CAUTION:

Use care not to allow grease or dirt to be attached on the printed circuit board and the battery.

NOTE:

- **To prevent theft, be sure to break the transmitter before discarding it.**
- **Dispose of the used battery properly according to applicable rules or regulations. Do not dispose of lithium batteries with ordinary household trash.**

CODE REGISTRATION PROCEDURE

1) Confirm that IG switch is OFF position.
2) Remove DOOR LOCK fuse and install it again.
3) Press the button on the transmitter one time toward the receiver within 30 seconds.
4) If two transmitters are registered, repeat step 1) to 3) with other transmitter.

NOTE:

- **Two transmitter codes can be registered.**
- **When a new transmitter is registered, the oldest one will be cleared.**

POWER DOOR MIRROR CONTROL SYSTEM (IF EQUIPPED)

MIRROR SWITCH

INSPECTION

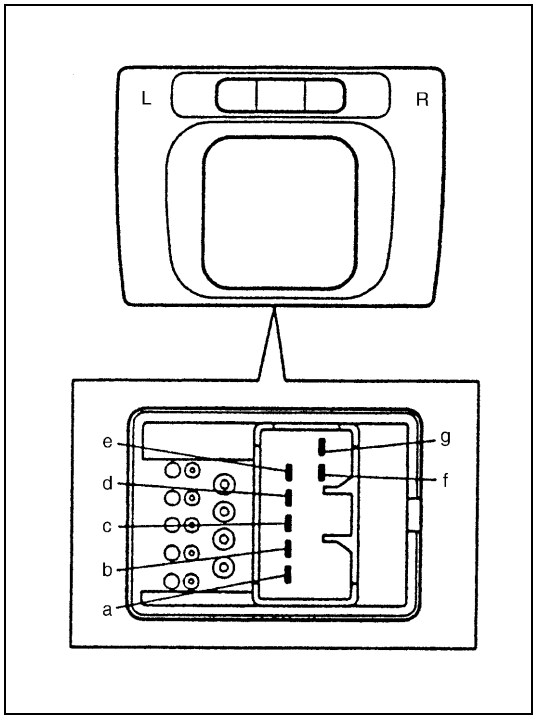

1) Remove mirror switch from instrument panel.
2) Check for continuity between terminals at each switch position as show below.
   If check result is not as specified, replace mirror switch.

L / R	a	b	c	d / e	g / f
UP	○	○	○		○
DOWN	○	○	○		○
LEFT	○	○	○	○	
RIGHT	○	○	○	○	

DOOR MIRROR ACTUATOR

INSPECTION

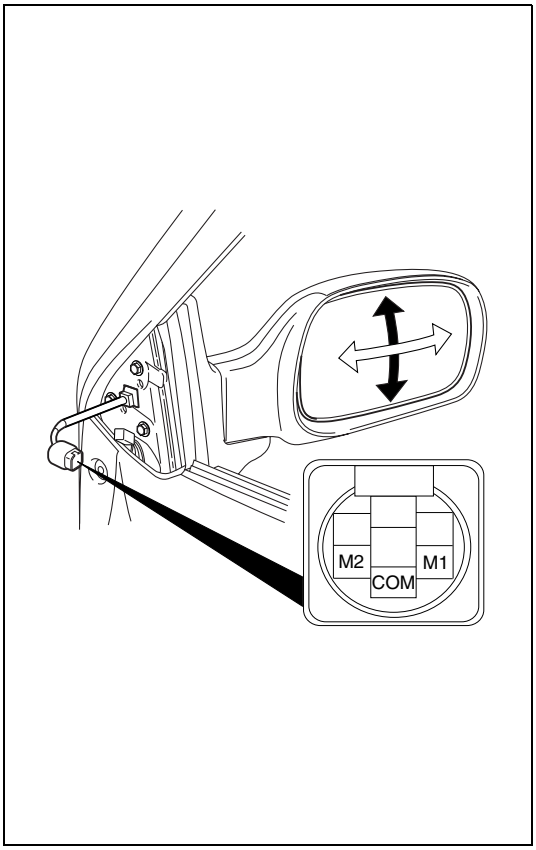

1) Remove garnish from door.
2) Pull out door mirror coupler at bracket.
3) Disconnect door mirror coupler.
4) Check that door mirror operates properly when battery voltage is applied to connector terminals.
   Connect battery positive and negative terminal to the door mirror terminal shown below.
   If it does not follow the table's operation, replace door mirror assembly.

Terminal / Operation	COM	M1	M2
Up	⊖	⊕	
Down	⊕	⊖	
Left	⊖		⊕
Right	⊕		⊖

NOTE:

When installing door mirror to door, be careful not to pinch harness between door and door mirror.

FRONT SEAT HEATER (IF EQUIPPED)

SEAT HEATER SWITCH (DRIVER AND PASSENGER SIDE)

INSPECTION

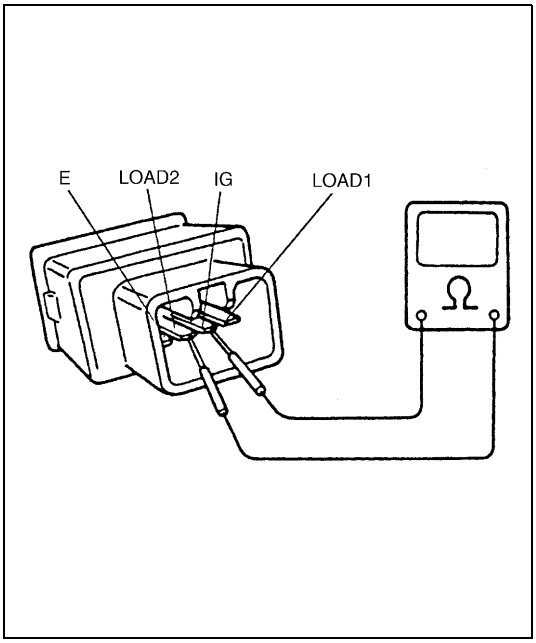

1) Confirm that ignition switch is OFF position.
2) Pull out seat heater switch from front center console box.
3) Disconnect seat heater switch coupler.
4) Check for continuity between terminals at each switch position as show below. If check result is not as specified, replace.

Terminal / Switch Position	IG	LOAD1	LOAD2	E
OFF				
LO	○ ○	○ ○	○	○
HI	○ ○	○ ○	○	○ ○

SEAT HEATER WIRE

INSPECTION

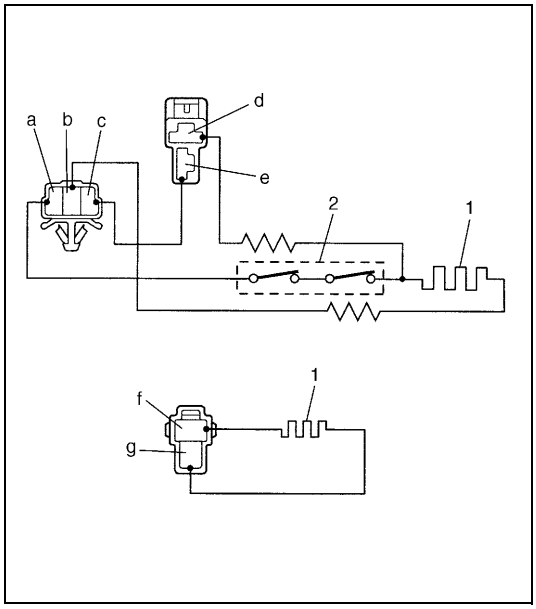

1) Confirm that seat heater switch is OFF position.
2) Disconnect two couplers of seat heater under the seat cushion.
3) Check for continuity between terminals as show below.
   If not continuity, replace faulty seat heater.

Seat heater circuit in seat back
Between “a” and “b”
Between “b” and “d”
Between “c” and “e”

Seat heater circuit in seat cushion
Between “f” and “g”

1. Heater wire
2. Thermostat

SECTION 8G

IMMOBILIZER CONTROL SYSTEM

WARNING:

For vehicles equipped with Supplemental Restraint (Air Bag) System

- **Service on and around the air bag system components or wiring must be performed only by an authorized SUZUKI dealer. Refer to "Air Bag System Components and Wiring Location View" under "General Description" in air bag system section in order to confirm whether you are performing service on or near the air bag system components or wiring. Please observe all WARNINGS and "Service Precautions" under "On-Vehicle Service" in air bag system section before performing service on or around the air bag system components or wiring. Failure to follow WARNINGS could result in unintentional activation of the system or could render the system inoperative. Either of these two conditions may result in severe injury.**
- **Technical service work must be started at least 90 seconds after the ignition switch is turned to the "LOCK" position and the negative cable is disconnected from the battery. Otherwise, the system may be activated by reserve energy in the Sensing and Diagnostic Module (SDM).**

8G

CONTENTS

GENERAL DESCRIPTION 8G-2
WIRING CIRCUIT 8G-3
ON-BOARD DIAGNOSTIC SYSTEM (SELF-DIAGNOSIS FUNCTION) 8G-4
DIAGNOSIS 8G-5
PRECAUTIONS IN DIAGNOSING TROUBLES 8G-5
PRECAUTIONS IN IDENTIFYING DIAGNOSTIC TROUBLE CODE 8G-5
DIAGNOSTIC FLOW TABLE 8G-6
DIAGNOSTIC TROUBLE CODE (DTC) CHECK (IMMOBILIZER CONTROL MODULE) 8G-7
DIAGNOSTIC TROUBLE CODE (DTC) CHECK (ECM) 8G-8
DIAGNOSTIC TROUBLE CODE TABLE 8G-9
TABLE A - IMMOBILIZER INDICATOR LAMP CHECK (IMMOBILIZER INDICATOR LAMP DOES NOT LIGHT AT IGNITION SWITCH ON) 8G-10
TABLE B - IMMOBILIZER INDICATOR LAMP CHECK (IMMOBILIZER INDICATOR LAMP REMAINS ON AFTER ENGINE STARTS) 8G-11
TABLE C - DTC IS NOT OUTPUT FROM IMMOBILIZER CONTROL MODULE 8G-12
DTC11/32 TRANSPONDER CODE NOT MATCHED 8G-13
DTC31 TRANSPONDER CODE NOT REGISTERED 8G-14
DTC12 FAULT IN IMMOBILIZER CONTROL MODULE 8G-14
DTC13 NO TRANSPONDER CODE TRANSMITTED OR COIL ANTENNA OPENED/SHORTED 8G-15
DTC21 ECM/IMMOBILIZER CONTROL MODULE CODE NOT MATCHED (IMMOBILIZER CONTROL MODULE SIDE) 8G-16
DTC P1623 ECM/IMMOBILIZER CONTROL MODULE CODE NOT MATCHED (ECM SIDE) 8G-16
DTC P1620 ECM/IMMOBILIZER CONTROL MODULE CODE NOT REGISTERED 8G-16
DTC P1622 FAULT IN ECM 8G-16
DTC22 IGNITION SWITCH CIRCUIT OPEN/SHORT 8G-17
DTC23 NO ECM/IMMOBILIZER CONTROL MODULE CODE TRANSMITTED FROM ECM OR DLC CIRCUIT OPENED/ SHORTED 8G-18
DTC P1621 NO ECM/IMMOBILIZER CONTROL MODULE CODE TRANSMITTED FROM IMMOBILIZER CONTROL MODULE OR DLC CIRCUIT OPENED/ SHORTED 8G-18
INSPECTION OF ECM, IMMOBILIZER CONTROL MODULE AND ITS CIRCUIT .. 8G-20
ON-VEHICLE SERVICE 8G-21
PRECAUTIONS IN HANDLING IMMOBILIZER CONTROL SYSTEM 8G-21
IMMOBILIZER CONTROL MODULE 8G-22
HOW TO REGISTER IGNITION KEY 8G-23

PROCEDURE AFTER IMMOBILIZER CONTROL MODULE REPLACEMENT 8G-24
PROCEDURE AFTER ECM REPLACEMENT 8G-25
SPECIAL TOOL 8G-25

GENERAL DESCRIPTION

The immobilizer control system designed to prevent vehicle burglar consists of following components.

- Engine control module (ECM)
- Immobilizer control module (1) with coil antenna
- Ignition key (2) with built-in transponder

Operation of this system is as follows.

i) Each ignition key has its own code (Transponder code) stored in memory. When the ignition switch is turned ON, Immobilizer Control Module tries to read the Transponder code through the coil antenna installed to the steering lock assembly.

ii) Immobilizer Control Module compares the Transponder code read in Step (i) and that registered in Immobilizer Control Module and checks if they match.

iii) When it is confirmed that two Transponder codes match each other as described above, Immobilizer Control Module and ECM check if ECM/Immobilizer Control Module codes registered in them respectively match.

iv) Only when it is confirmed that ECM/Immobilizer Control Module codes match, the engine starts running. If Transponder codes in Step (ii) or ECM/Immobilizer Control Module codes in Step (iii) do not match, ECM will stop operation of the injector and ignition of spark plug.

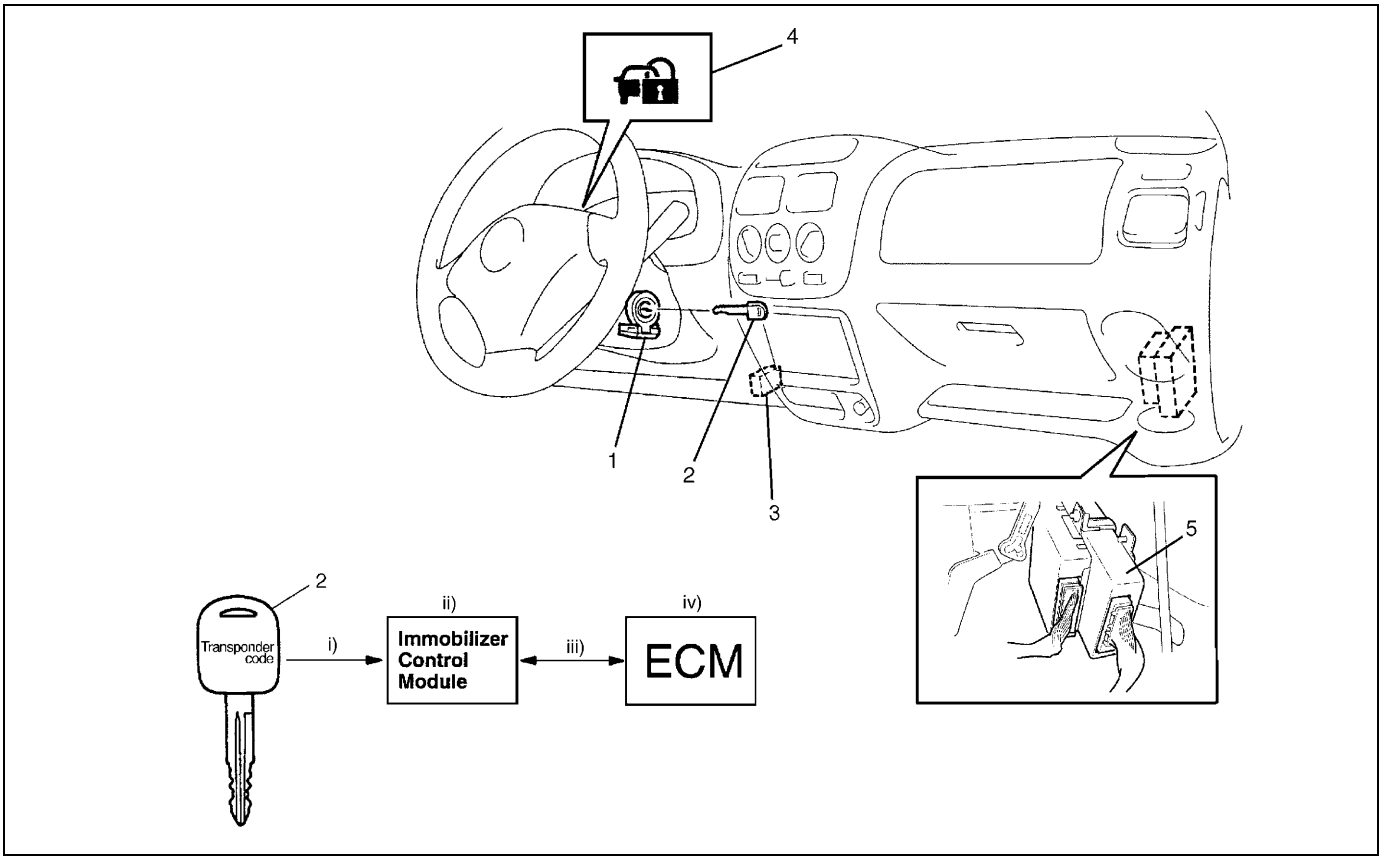

3.	Data link connector (DLC)
4.	Immobilizer indicator lamp
5.	ECM

WIRING CIRCUIT

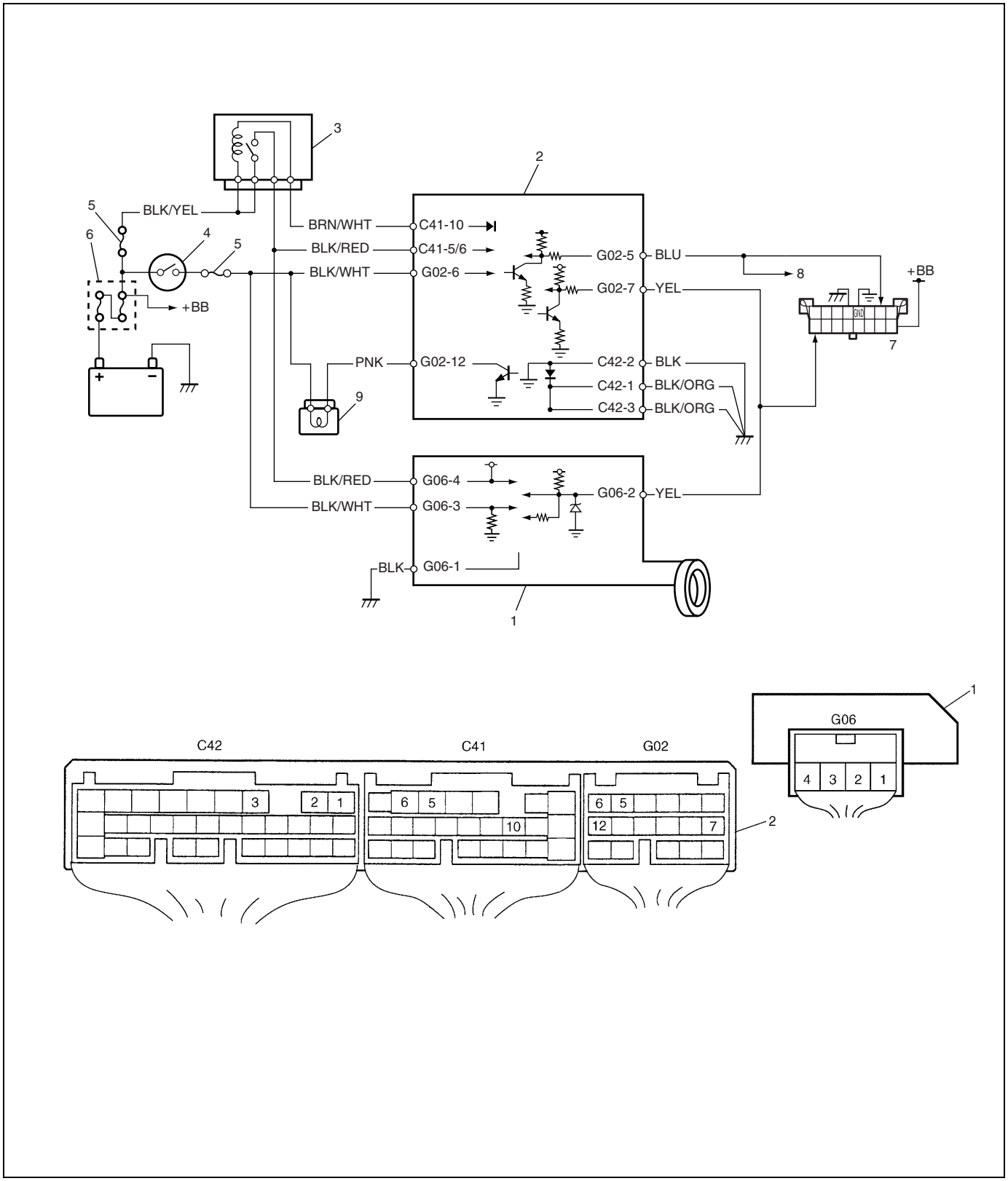

1. Immobilizer Control Module	4. Ignition switch	7. Data link connector
2. ECM	5. Fuse	8. To ABS control module, SDM and TCM
3. Main relay	6. Main fuse	9. Immobilizer indicator lamp

ON-BOARD DIAGNOSTIC SYSTEM (SELF-DIAGNOSIS FUNCTION)

Immobilizer Control Module and ECM diagnose troubles which may occur in the area including the following parts when the ignition switch is ON.

ECM :

- ECM/Immobilizer Control Module code
- Serial data link circuit
- ECM

Immobilizer Control Module :

- Transponder code
- Coil antenna
- ECM/Immobilizer Control Module code
- Serial data link circuit
- Immobilizer Control Module
- Ignition signal

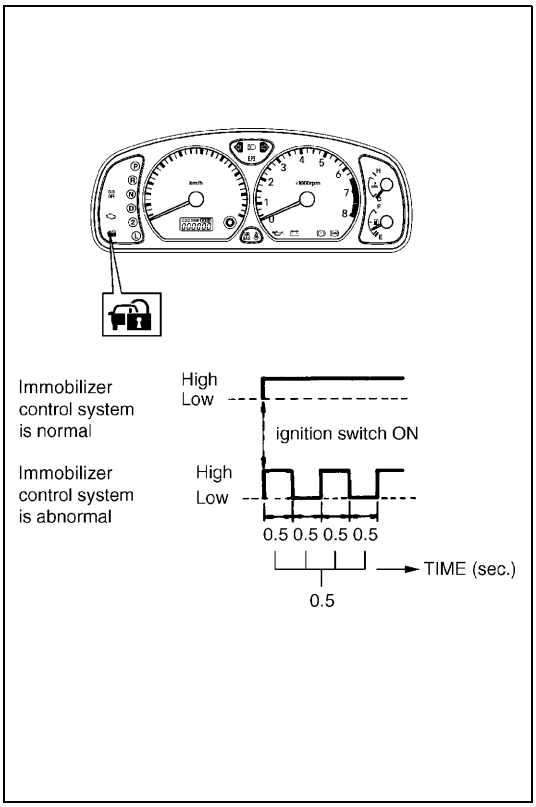

With the ignition switch turned ON (but the engine at stop) regardless of the condition of the engine and emission control system, ECM indicates whether a trouble has occurred in the immobilizer control system or not by causing the immobilizer indicator lamp to flash or turn ON.
Immobilizer indicator lamp is ON :
No trouble exists in the immobilizer control system.
Immobilizer indicator lamp is flashing :
ECM or Immobilizer Control Module has detected some trouble in the immobilizer control system.

NOTE:

As soon as the ignition switch is turned ON, ECM and Immobilizer Control Module diagnose if a trouble has occurred in the immobilizer control system. While the diagnosis is being made, the immobilizer indicator lamp stays ON and if the diagnosis result is "abnormal", it immediately changes to flashing but if the result is "normal", it remains ON. Diagnosis takes about 3 seconds at maximum.

When ECM and Immobilizer Control Module detects a trouble, it stores DTC corresponding to the exact trouble area in ECM and Immobilizer Control Module memory.

DTCs stored in memory of each controller (Immobilizer Control Module and ECM) can be read by using the procedure described in "DIAGNOSTIC TROUBLE CODE CHECK (IMMOBILIZER CONTROL MODULE)" and "DIAGNOSTIC TROUBLE CODE CHECK(ECM)" in this section.

DIAGNOSIS

PRECAUTIONS IN DIAGNOSING TROUBLES

PRECAUTIONS IN IDENTIFYING DIAGNOSTIC TROUBLE CODE

ECM

- Before identifying diagnostic trouble code indicated through Suzuki scan tool, don't disconnect couplers from ECM, battery cable from battery, ECM ground wire harness from engine.
  Such disconnection will clear trouble codes for engine and emission control system and immobilizer control system stored in memory of ECM.
- Take a note of diagnostic trouble code indicated first.

IMMOBILIZER CONTROL MODULE

- Take a note of diagnostic trouble code indicated first.

INTERMITTENT TROUBLES

- There is case where Suzuki scan tool indicate a diagnostic trouble code representing a trouble which occurred only temporarily and has gone. In such case, it may occur that good parts are replaced unnecessarily. To prevent such accident, be sure to follow instructions given below when checking by using “Diagnostic Flow Table”.
  – When trouble can be identified, it is not an intermittent one :
    Check coil antenna, ignition key, wires and each connection and if they are all in good condition, substitute a known-good ECM and recheck.
  – When trouble can not be identified but Suzuki scan tool indicate a trouble code :
    Diagnose trouble by using that code No. and if ignition key, coil antenna, wires and each connection are all in good condition, turn OFF ignition switch and then ON.

Then check what Suzuki scan tool indicate.Only when they indicate trouble code again, substitute a known-good ECM or Immobilizer Control Module and check again.
If they indicate not trouble code but normal code, it means that an intermittent trouble did occur and has gone. In this case, check wires and connections carefully again.

DIAGNOSTIC FLOW TABLE

Step	Action	Yes	No
1	1) Check immobilizer indicator lamp while ignition switch is ON (but without starting engine). See Fig. 1. Does immobilizer indicator lamp flash?	Go to Step 3.	If immobilizer indicator lamp remains ON, go to Step 2. If immobilizer indicator lamp remains OFF, go to "TABLE A IMMOBILIZER INDICATOR LAMP CHECK" in this section.
2	1) Check DTC stored in ECM referring to "DIAGNOSTIC TROUBLE CODE CHECK (ECM)" in this section. Is there any DTC(s)?	Go to "TABLE B IMMOBILIZER INDICATOR LAMP CHECK" in this section.	Immobilizer control system is in good condition.
3	1) Check DTC stored in immobilizer control module referring to "DIAGNOSTIC TROUBLE CODE CHECK (IMMOBILIZER CONTROL MODULE)" in this section. Is there any DTC(s)?	Go to flow table for DTC No.	Go to Step 4.
4	1) Check DTC stored in ECM referring to "DIAGNOSTIC TROUBLE CODE CHECK (ECM)" in this section. Is there any DTC(s) for immobilizer control system?	Go to flow table for DTC No.	Substitute a known-good ECM and recheck. See NOTE below.

NOTE:

After replacing with a known-good ECM, register ECM/Immobilizer Control Module code in ECM by performing procedure described in "Procedure after ECM Replacement" section.

Fig. 1 for Step 1

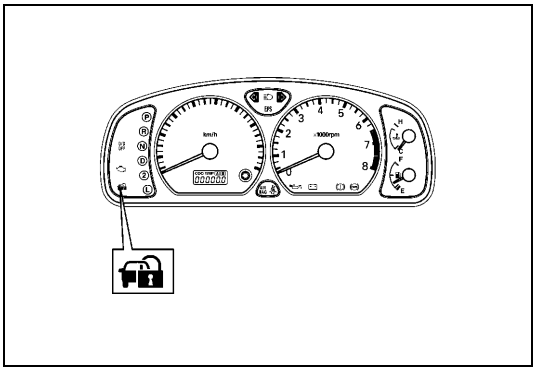

DIAGNOSTIC TROUBLE CODE (DTC) CHECK (IMMOBILIZER CONTROL MODULE)

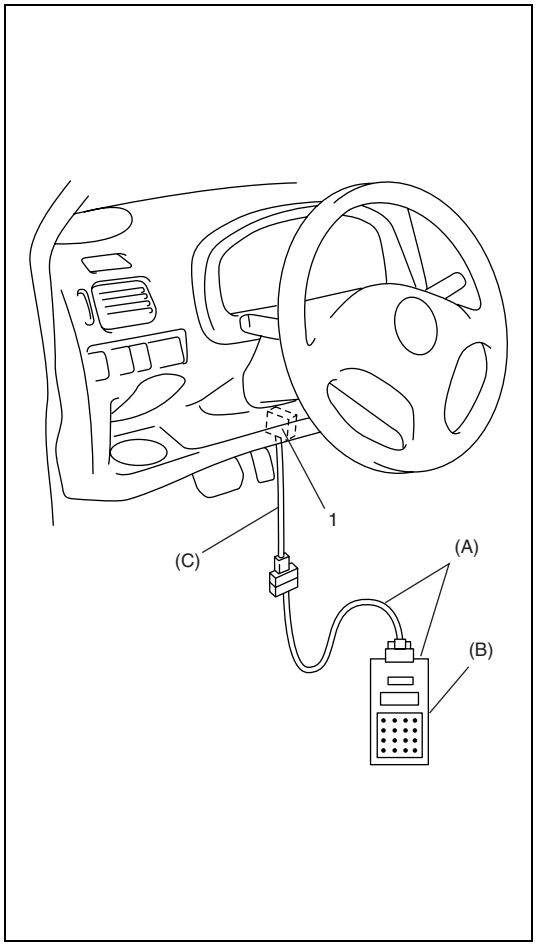

1) Turn ignition switch OFF.
2) After setting cartridge to Suzuki scan tool, connect it to data link connector (DLC) (1) located on underside of instrument panel at driver's seat side.

Special tool
(A) : 09931-76011 (Suzuki scan tool)
(B) : Mass storage cartridge
(C) : 09931-76030 (16/14 pin DLC cable)

3) Turn ignition switch ON.
4) Read DTC stored in immobilizer control module according to instructions displayed on Suzuki scan tool and print it or write it down. Refer to Suzuki scan tool operator's manual for further details.
   If communication between Suzuki scan tool and immobilizer control module is not possible, go to "Diagnostic Flow Table C".

NOTE:

When reading DTC stored in immobilizer control module using Suzuki scan tool, select "BCM" from the applications menu and "IMMOBILIZER" from the select system menu displayed on Suzuki scan tool.

5) After completing the check, turn ignition switch OFF and disconnect Suzuki scan tool from data link connector (DLC).

DIAGNOSTIC TROUBLE CODE (DTC) CHECK (ECM)

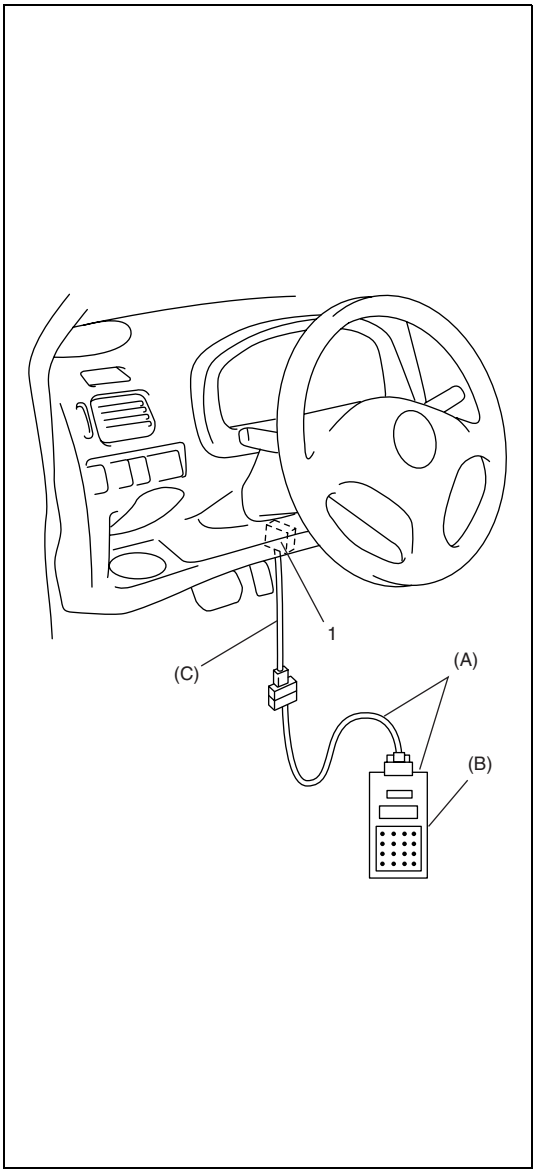

1) Turn ignition switch OFF.
2) After setting cartridge to Suzuki scan tool, connect it to data link connector (DLC) (1) located on underside of instrument panel at driver's seat side.

Special tool
(A) : 09931-76011 (Suzuki scan tool)
(B) : Mass storage cartridge
(C) : 09931-76030 (16/14 pin DLC cable)

3) Turn ignition switch ON.
4) Read DTC stored in ECM according to instructions displayed on Suzuki scan tool and print it or write it down. Refer to Suzuki scan tool operator's manual for further details.
   If communication between Suzuki scan tool and ECM is not possible, check if Suzuki scan tool is communicable by connecting it to ECM in another vehicle. If communication is possible in this case, Suzuki scan tool is in good condition. Then check data link connector and serial data line (circuit) in the vehicle with which communication was not possible.

NOTE:

- **When reading DTC stored in ECM using Suzuki scan tool, select "ECM" from the applications menu and "SUZUKI mode" from the communication mode menu displayed on Suzuki scan tool.**
- **If ECM detects a trouble in both engine and emission control system and immobilizer control system, Suzuki scan tool indicates trouble codes of both systems using Suzuki mode of ECM application.**

5) After completing the check, turn ignition switch OFF and disconnect Suzuki scan tool from data link connector (DLC).

DIAGNOSTIC TROUBLE CODE TABLE

IMMOBILIZER CONTROL MODULE

DTC (indicated on Suzuki scan tool)	DIAGNOSTIC AREA	DIAGNOSIS
NO DTC	Normal (No code)	This code appears when none of the other codes are identified.
11	Transponder code	Diagnose trouble according to "Diagnostic Flow Table" corresponding to each code No.
31		
32		
12	Immobilizer Control Module	
13	Coil antenna or ignition key with built-in transponder	
21	ECM/Immobilizer Control Module code	
22	Ignition switch circuit	
23	Serial data link circuit	

ECM

DTC (indicated on Suzuki scan tool)	DIAGNOSTIC AREA	DIAGNOSIS
NO DTC	Normal	This code appears when it is confirmed that none of other trouble codes is set for immobilizer control system or engine and emission control system.
P1623	ECM/Immobilizer Control Module code	Diagnose trouble according to "DIAGNOSTIC FLOW TABLE" corresponding to each code No.
P1620		
P1622	ECM	
P1621	Serial data link wire	

TABLE A - IMMOBILIZER INDICATOR LAMP CHECK (IMMOBILIZER INDICATOR LAMP DOES NOT LIGHT AT IGNITION SWITCH ON)

WIRING DIAGRAM

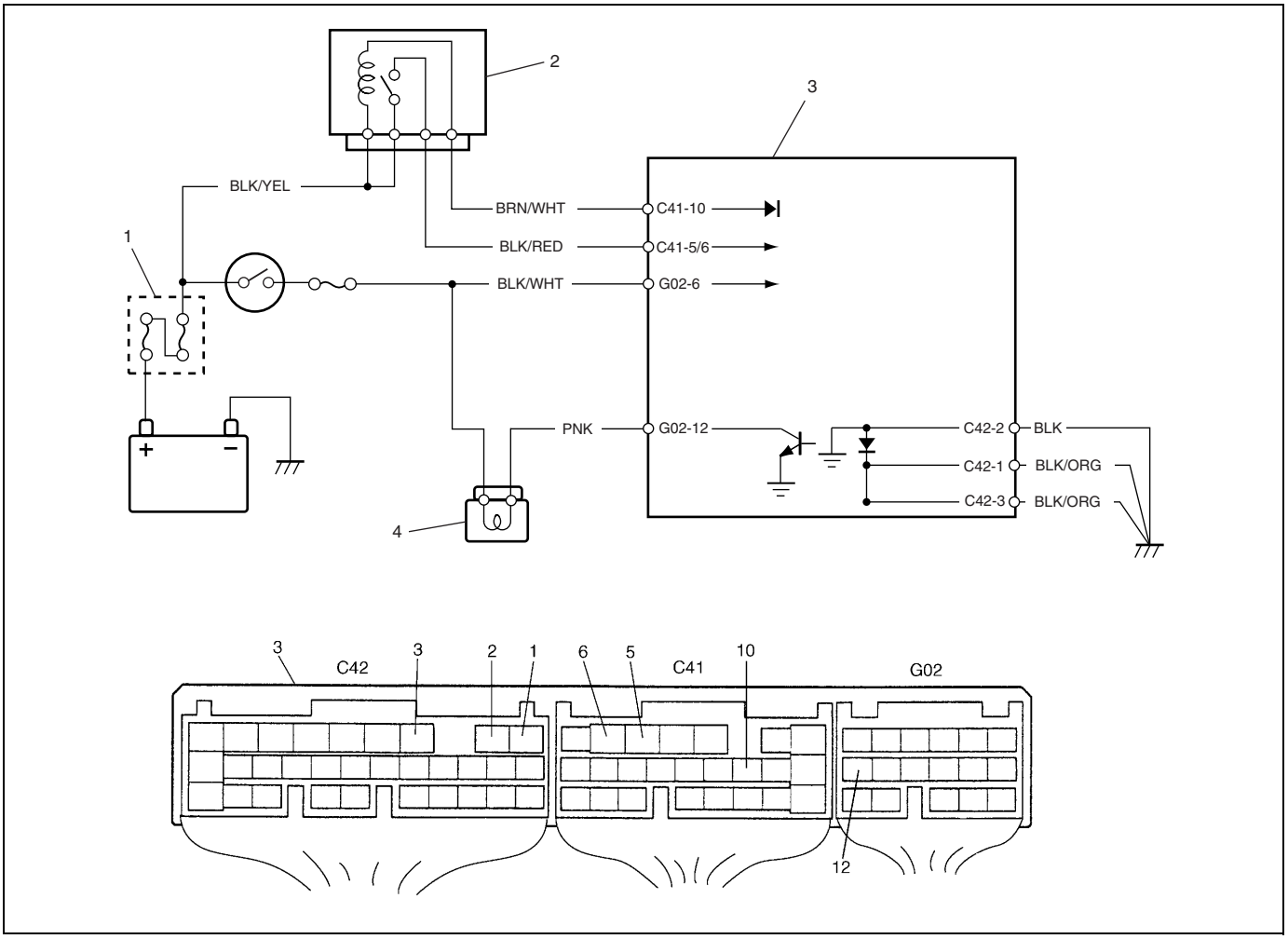

1. Main fuse	2. Main relay	3. ECM	4. Immobilizer indicator lamp

INSPECTION

Step	Action	Yes	No
1	1) Turn ignition switch ON. Do other indicator/warning lights in combination meter come ON?	Go to Step 2.	"IG" fuse blown, main fuse blown, ignition switch malfunction, "BLK/WHT" circuit between "IG" fuse and combination meter or poor coupler connection at combination meter.
2	1) Turn ignition switch OFF and disconnect connectors from ECM. 2) Check for proper connection to ECM at terminal G02-12. 3) If OK, then using service wire, ground terminal G02-12 in connector disconnected. Does immobilizer indicator lamp turn on at ignition switch ON?	Substitute a known-good ECM and recheck.	Bulb burned out or "PNK" wire circuit open.

TABLE B - IMMOBILIZER INDICATOR LAMP CHECK (IMMOBILIZER INDICATOR LAMP REMAINS ON AFTER ENGINE STARTS)

WIRING DIAGRAM

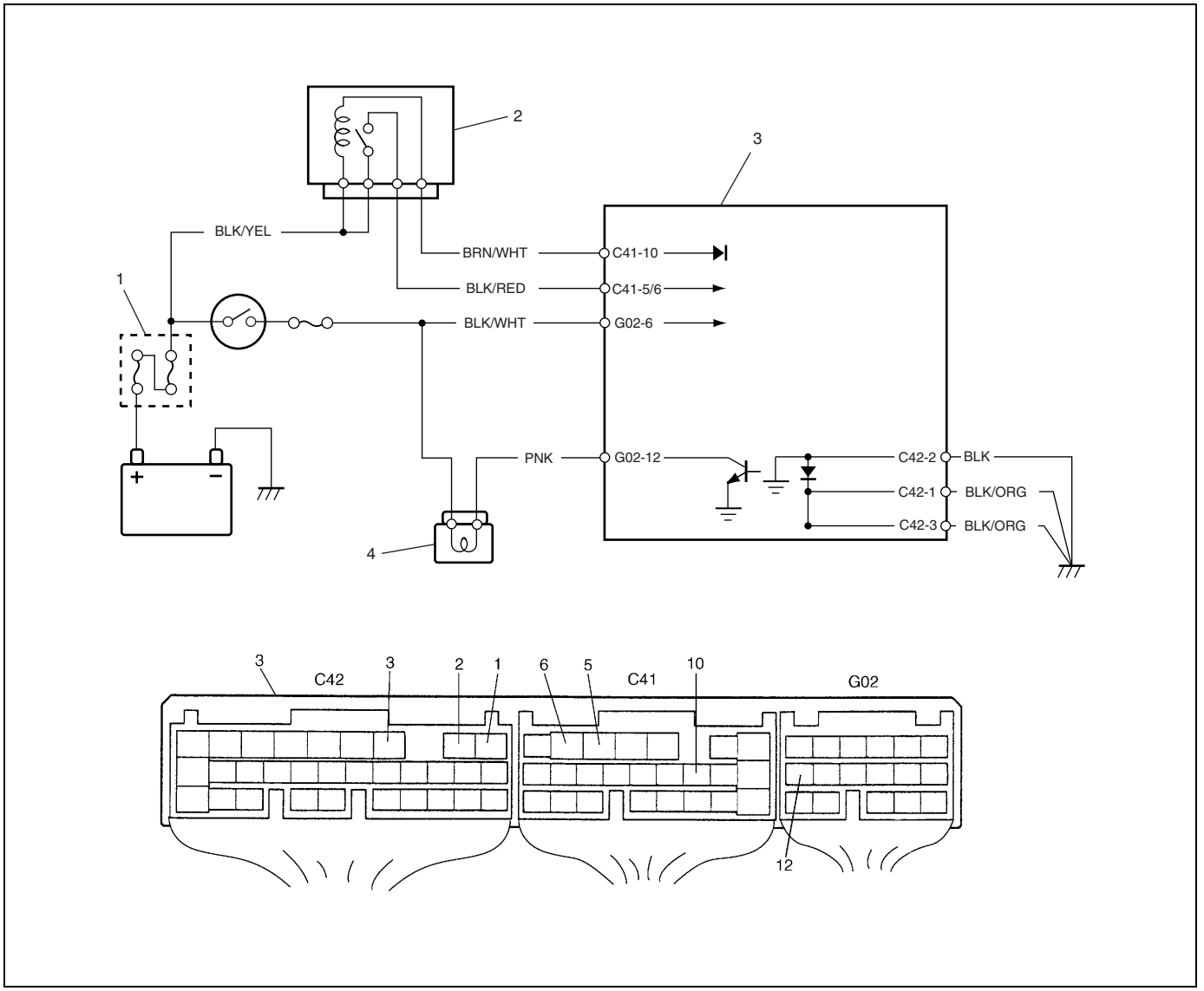

1. Main fuse	2. Main relay	3. ECM	4. Immobilizer indicator lamp

INSPECTION

Step	Action	Yes	No
1	1) With ignition switch OFF, disconnect couplers from ECM. Does immobilizer indicator lamp turn ON at ignition switch ON?	"PNK" wire shorted to ground circuit.	Substitute a known-good ECM and recheck.

TABLE C - DTC IS NOT OUTPUT FROM IMMOBILIZER CONTROL MODULE

WIRING DIAGRAM

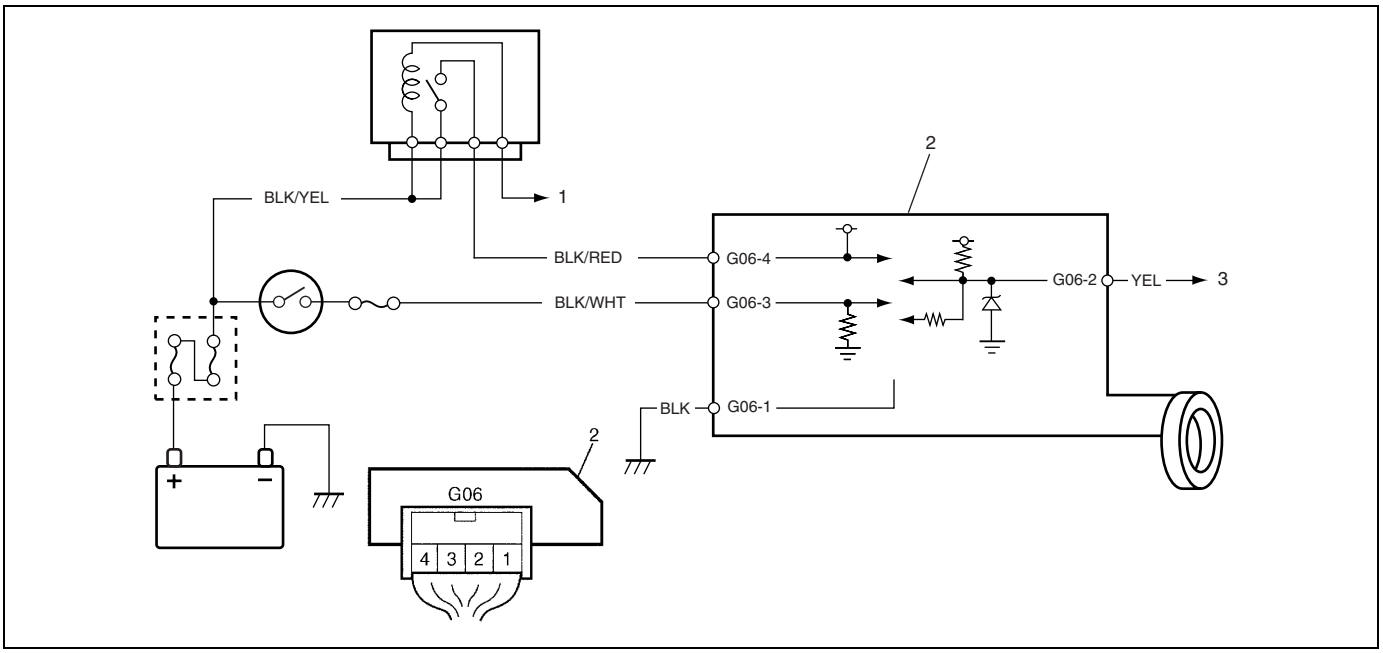

1. To ECM	2. Immobilizer control module	3. To #9-pin in DLC

INSPECTION

Step	Action	Yes	No
1	Check voltage between G06-4 terminal and body ground with ignition switch turned ON. See Fig 1. Is it 10 – 14 V?	Go to Step 2.	"BLK/RED" wire open or short to ground.
2	1) Disconnect coupler (1) at immobilizer control module. Is there continuity between coupler terminal G06-1 and body ground? See Fig 2.	• Poor G06-4 or G06-1 connection • Poor #9-pin connection in DLC • Serial data line "YEL" open or short to ground If connections and line are OK, substitute a known-good Immobilizer Control Module and recheck. See NOTE below.	"BLK" wire open.

NOTE:

After replacing with a known-good Immobilizer Control Module, register ECM/Immobilizer Control Module code in ECM and Transponder code and ECM/Immobilizer Control Module code in Immobilizer Control Module by performing procedure described in "PROCEDURE AFTER IMMOBILIZER CONTROL MODULE REPLACEMENT" in this section.

Fig. 1 for Step 1

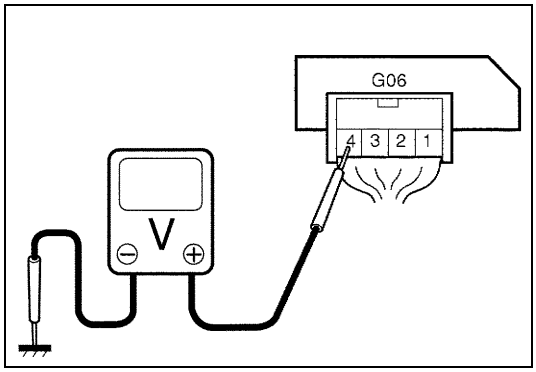

Fig. 2 for Step 2

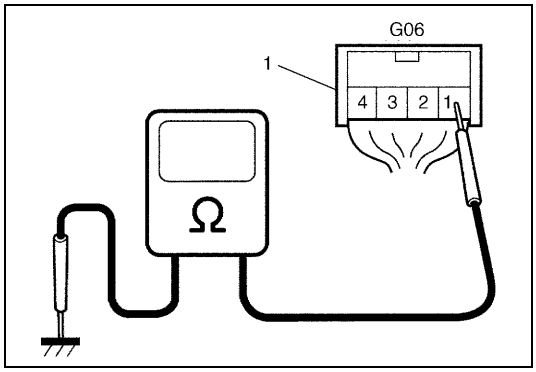

DTC11/32 TRANSPONDER CODE NOT MATCHED

DESCRIPTION

Immobilizer Control Module checks if Transponder code transmitted from ignition key and that registered in Immobilizer Control Module match when ignition switch is ON. If they do not, DTC 11 and/or 32 are set.

INSPECTION

Register ignition key with built-in transponder by using SUZUKI scan tool and performing following steps.

1) Register Transponder code in Immobilizer Control Module by performing procedure described in “How To Register Ignition Key”.
2) Turn ignition switch OFF, then turn it ON and check that DTC11 and/or 32 are not set.

DTC31 TRANSPONDER CODE NOT REGISTERED

DESCRIPTION

Immobilizer Control Module checks if Transponder code transmitted from ignition key and that registered in Immobilizer Control Module match when ignition switch is ON. If there is no Transponder code registered in Immobilizer Control Module, this DTC is set.

INSPECTION

Register ignition key with built-in transponder by using SUZUKI scan tool and performing following steps.

1) Register Transponder code in Immobilizer Control Module by performing procedure described in “How To Register Ignition Key”.
2) Turn ignition switch OFF, then turn it ON and check that DTC31 is not set.

DTC12 FAULT IN IMMOBILIZER CONTROL MODULE

DESCRIPTION

This DTC is set when an internal fault is detected in Immobilizer Control Module.

INSPECTION

Step	Action	Yes	No
1	1) Ignition switch OFF. 2) Disconnect connectors from Immobilizer Control Module. 3) Check for proper connection to Immobilizer Control Module at all terminals. Are they in good condition?	Substitute a known-good Immobilizer Control Module and recheck. See NOTE below.	Repair or replace.

NOTE:

After replacing with a known-good Immobilizer Control Module, register ECM/Immobilizer Control Module code in ECM and Transponder code and ECM/Immobilizer Control Module code in Immobilizer Control Module by performing procedure described in “PROCEDURE AFTER IMMOBILIZER CONTROL MODULE REPLACEMENT” in this section.

DTC13 NO TRANSPONDER CODE TRANSMITTED OR COIL ANTENNA OPENED/SHORTED

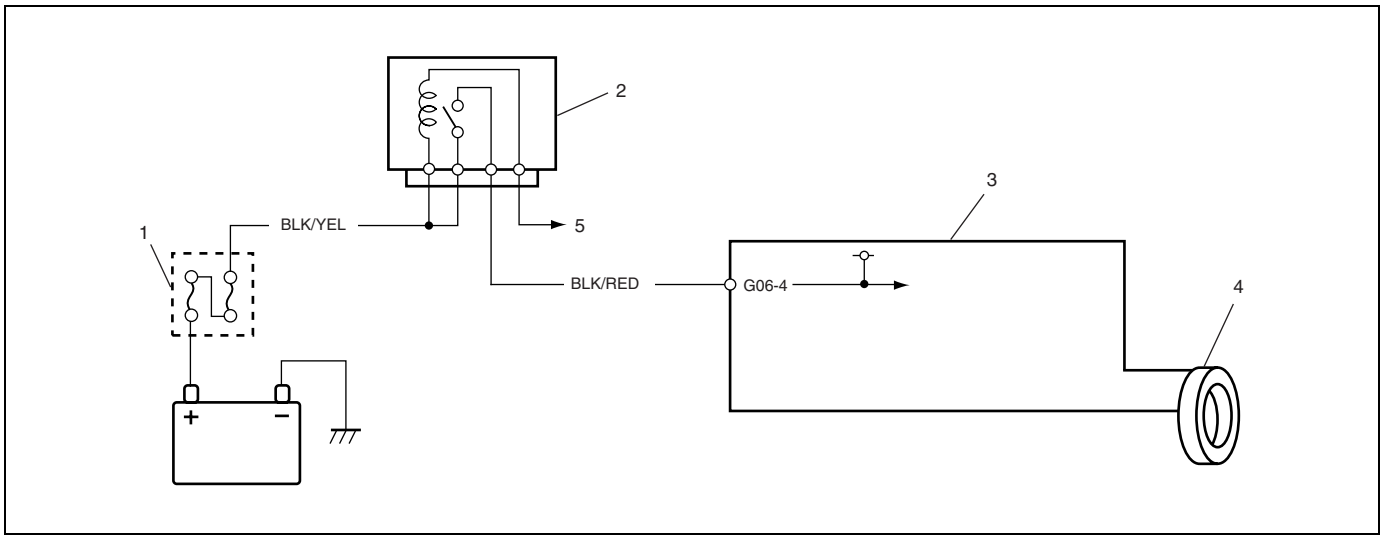

1. Main fuse	2. Main relay	3. Immobilizer Control Module	4. Coil antenna	5. To ECM

DESCRIPTION

Immobilizer Control Module energizes the coil antenna when the ignition switch is ON and reads Transponder code from the ignition key. When Immobilizer Control Module cannot read Transponder code from the ignition key even when the coil antenna is energized, this DTC is set.

INSPECTION

Step	Action	Yes	No
1	Check that knob shape and color for ignition key are as shown below. • Knob color : Dark gray • Knob shape : the same as shown in Fig.1. Is it the original one?	Substitute a known-good Immobilizer Control Module and recheck. See NOTE below.	Replace ignition key with original one and follow "Diagnostic Flow Table" again.

NOTE:

After replacing with a known-good Immobilizer Control Module, register ECM/Immobilizer Control Module code in ECM and Transponder code and ECM/Immobilizer Control Module code in Immobilizer Control Module by performing procedure described in "PROCEDURE AFTER IMMOBILIZER CONTROL MODULE REPLACEMENT" in this section.

Fig. 1 for Step 1

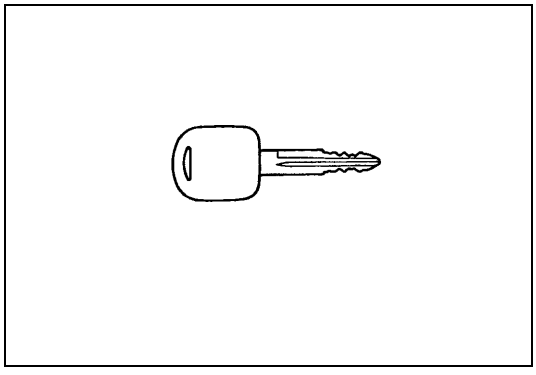

DTC21 ECM/IMMOBILIZER CONTROL MODULE CODE NOT MATCHED (IMMOBILIZER CONTROL MODULE SIDE)

DTC P1623 ECM/IMMOBILIZER CONTROL MODULE CODE NOT MATCHED (ECM SIDE)

DTC P1620 ECM/IMMOBILIZER CONTROL MODULE CODE NOT REGISTERED

DESCRIPTION

- DTC21
  Immobilizer Control Module checks if ECM/Immobilizer Control Module code transmitted from ECM and that registered in Immobilizer Control Module match when ignition switch is ON. If they do not, this DTC is set.
- DTC P1623
  ECM checks if ECM/Immobilizer Control Module code transmitted from Immobilizer Control Module and that registered in ECM match when ignition switch is ON. If they do not, this DTC is set.
- DTC P1620
  ECM checks if code transmitted from Immobilizer Control Module and that registered in ECM match when ignition switch is ON. If there is no ECM/Immobilizer Control Module code registered in ECM, this DTC is set.

INSPECTION

Perform procedure described in “PROCEDURE AFTER ECM REPLACEMENT” in the section.

DTC P1622 FAULT IN ECM

DESCRIPTION

This DTC is set when an internal fault is detected in ECM.

INSPECTION

Step	Action	Yes	No
1	1) Ignition switch OFF. 2) Disconnect connectors from ECM. 3) Check for proper connection to ECM at all terminals. Are they in good condition?	Substitute a known-good ECM and recheck. See NOTE below.	Repair or replace.

NOTE:

After replacing with a known-good ECM, register ECM/Immobilizer Control Module code in ECM by performing procedure described in “PROCEDURE AFTER ECM REPLACEMENT” in this section.

DTC22 IGNITION SWITCH CIRCUIT OPEN/SHORT

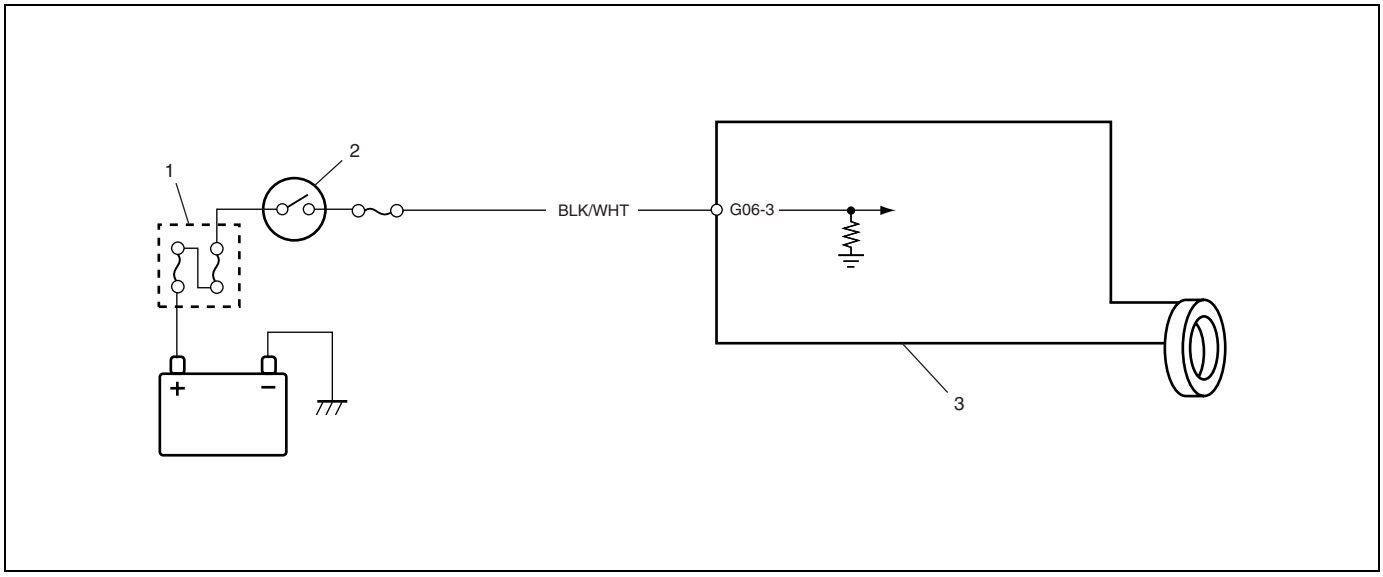

1. Main fuse	2. Ignition switch	3. Immobilizer Control Module

DESCRIPTION

Immobilizer Control Module monitors ignition signal when the ignition switch is ON. This DTC is set when no ignition signal input is detected by Immobilizer Control Module.

INSPECTION

Step	Action	Yes	No
1	Check voltage between Immobilizer Control Module (1) coupler terminal G06-3 and body ground with ignition switch turned ON. (See Fig. 1) Is it 10 – 14V?	Poor G06-3 terminal connection. If connection is OK, substitute a known-good Immobilizer Control Module and recheck. See NOTE below.	"BLK/WHT" wire open or short.

NOTE:

After replacing with a known-good Immobilizer Control Module, register ECM/Immobilizer Control Module code in ECM and Transponder code and ECM/Immobilizer Control Module code in Immobilizer Control Module by performing procedure described in "PROCEDURE AFTER IMMOBILIZER CONTROL MODULE REPLACEMENT" in this section.

Fig. 1 for Step 1

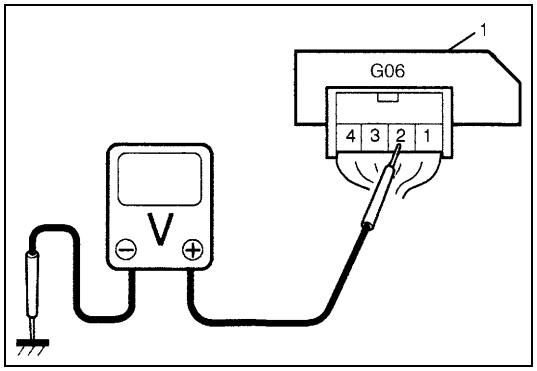

DTC23 NO ECM/IMMOBILIZER CONTROL MODULE CODE TRANSMITTED FROM ECM OR DLC CIRCUIT OPENED/SHORTED

DTC P1621 NO ECM/IMMOBILIZER CONTROL MODULE CODE TRANSMITTED FROM IMMOBILIZER CONTROL MODULE OR DLC CIRCUIT OPENED/ SHORTED

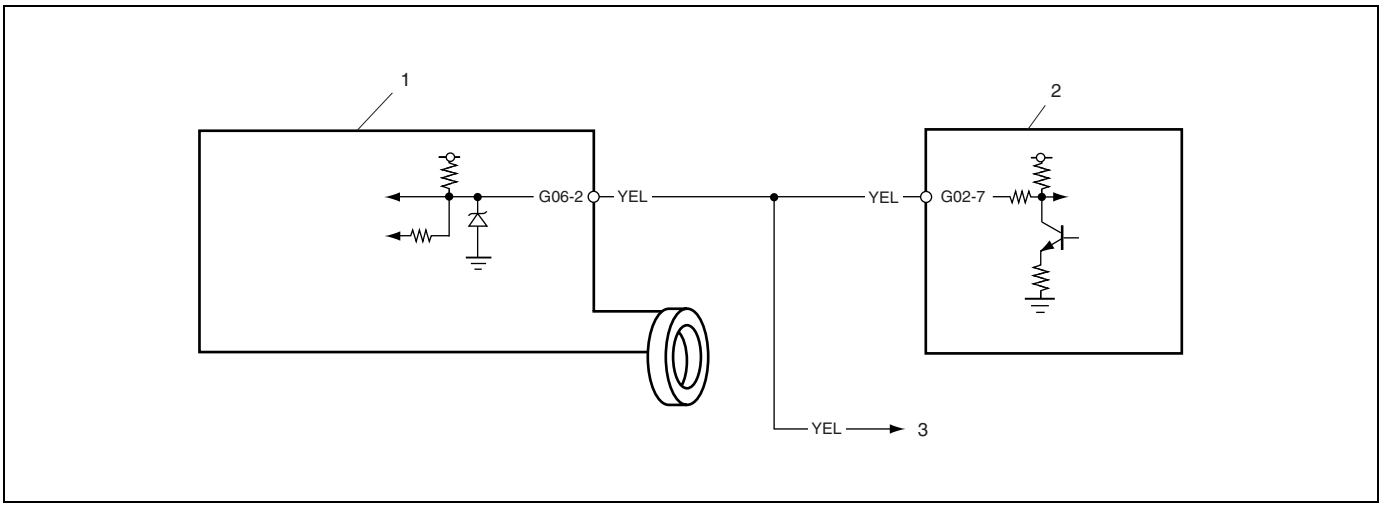

1. Immobilizer Control Module	2. ECM	3. To #9-pin in DLC

DESCRIPTION

When the ignition switch is ON, Immobilizer Control Module requests ECM and ECM requests Immobilizer Control Module to transmit ECM/Immobilizer Control Module code. If ECM/Immobilizer Control Module code is not transmitted from ECM or Immobilizer Control Module, Immobilizer Control Module sets DTC23 and ECM sets DTC P1621.

INSPECTION

Step	Action	Yes	No
1	Check voltage between Immobilizer Control Module (1) coupler terminal G06-2 and body ground with ignition switch turned ON. Is it 4 – 5V?	Go to Step 2.	"YEL" wire short.
2	1) Disconnect ECM coupler with ignition switch turned OFF. 2) Is there continuity between Immobilizer Control Module coupler (1) terminal G06-2 and serial data link terminal (G02-7) of ECM coupler? (For positions of Data link connector terminal of ECM coupler, refer to "WIRING CIRCUIT" in this section.)	Poor G06-2 terminal connection (Immobilizer Control Module) or Poor Data link connector terminal connection (ECM). If connections are OK, substitute a known-good ECM or Immobilizer Control Module and recheck. See NOTE below.	"YEL" wire between Immobilizer Control Module and ECM open.

NOTE:

- **After replacing with a known-good ECM, register ECM/Immobilizer Control Module code in ECM by performing procedure described in "PROCEDURE AFTER ECM REPLACEMENT" in this section.**
- **After replacing with a known-good Immobilizer Control Module, register ECM/Immobilizer Control Module code in ECM and Transponder code and ECM/Immobilizer Control Module code in Immobilizer Control Module by performing procedure described in "PROCEDURE AFTER IMMOBILIZER CONTROL MODULE REPLACEMENT" in the section.**

Fig. 1 for Step 1

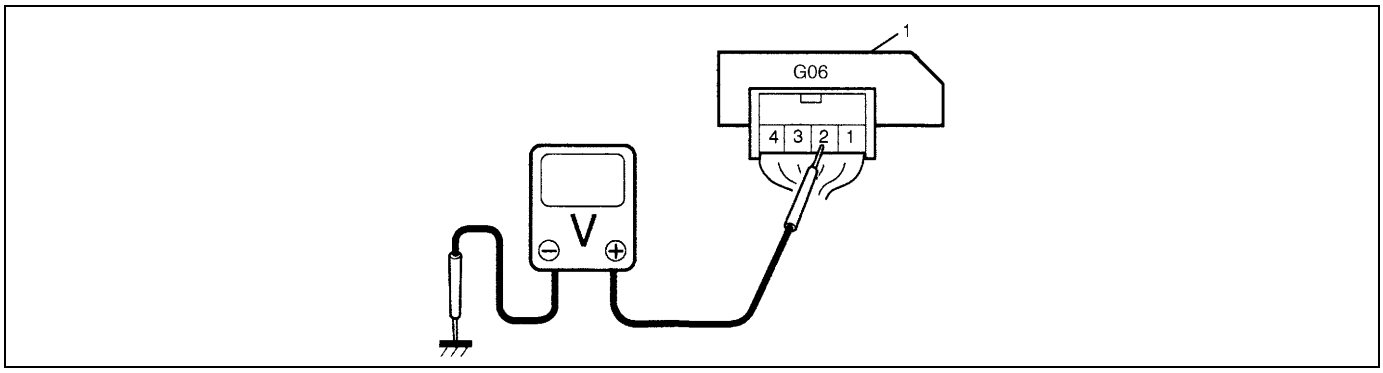

Fig. 2 for Step 2

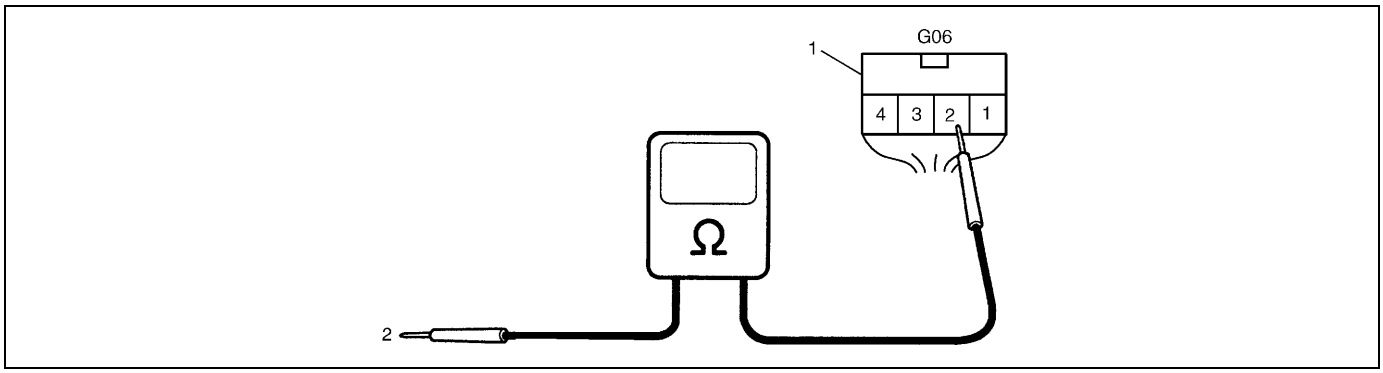

2. Connect to serial data link terminal (G02-7) of ECM coupler disconnected

INSPECTION OF ECM, IMMOBILIZER CONTROL MODULE AND ITS CIRCUIT

ECM, Immobilizer Control Module and its circuit can be checked at ECM wiring couplers and Immobilizer Control Module wiring coupler by measuring voltage. Described here is only inspection of Immobilizer Control Module. For inspection of ECM, refer to "ENGINE & EMISSION CONTROL INPUT/OUTPUT TABLE" in Section 6E1.

CAUTION:

Immobilizer Control Module cannot be checked by itself. It is strictly prohibited to connect voltmeter or ohmmeter to Immobilizer Control Module with coupler disconnected from it.

Voltage Check

1) Remove Immobilizer Control Module from steering lock assembly with ignition switch OFF, referring to "REMOVAL" of "IMMOBILIZER CONTROL MODULE" in this section.
2) Connect Immobilizer Control Module coupler to Immobilizer Control Module.
3) Check voltage at each terminal of coupler connected.

NOTE:

As each terminal voltage is affected by the battery voltage, confirm that it is 11V or more when ignition switch is ON.

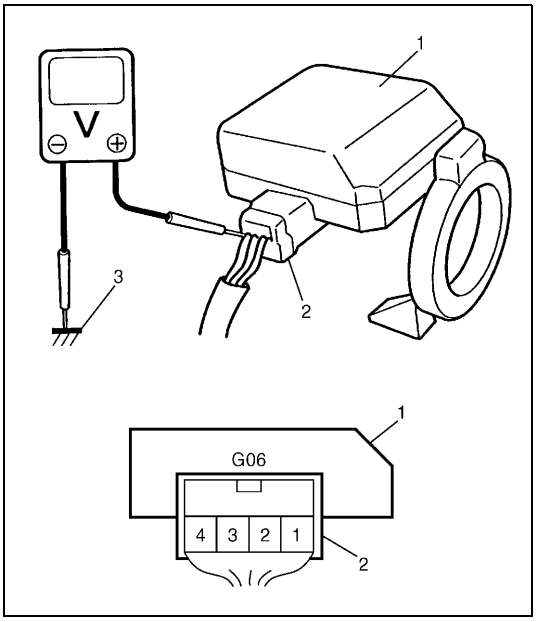

1.	Immobilizer Control Module
2.	Immobilizer Control Module coupler
3.	Body ground

TERMINAL	CIRCUIT	NOMAL VOLTAGE	CONDITION
G06-1	Ground	–	–
G06-2	Data link connector (Serial data terminal)	4 – 5V	Ignition switch ON
G06-3	Ignition signal	10 – 14V	Ignition switch ON
		0 – 0.8V	Ignition switch OFF
G06-4	Power source	10 – 14V	Ignition switch ON

ON-VEHICLE SERVICE

PRECAUTIONS IN HANDLING IMMOBILIZER CONTROL SYSTEM

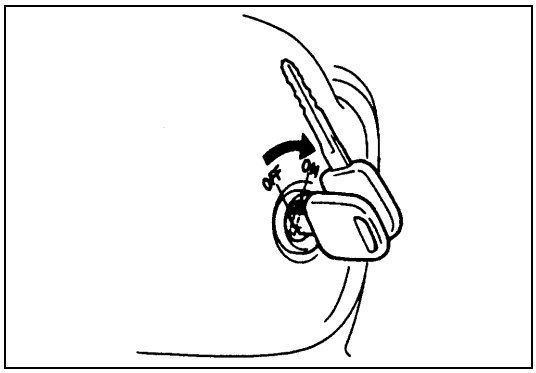

- Don't turn ON ignition switch with ignition key for immobilizer control system put together with another one or placed quite close to another one. Or the system may detect abnormal condition and prevent engine from starting.

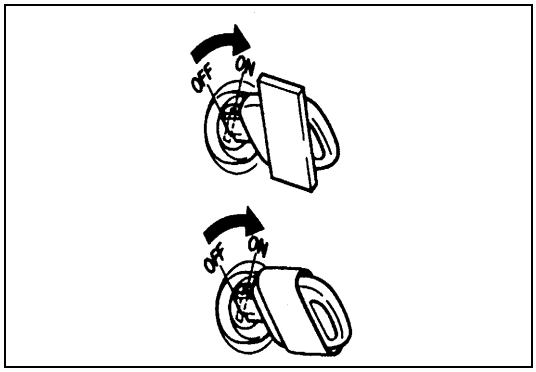

- Do not turn ON ignition switch by using ignition key with any type of metal wound around its grip or in contact with it. Or the system may detect abnormal condition and prevent engine from starting.

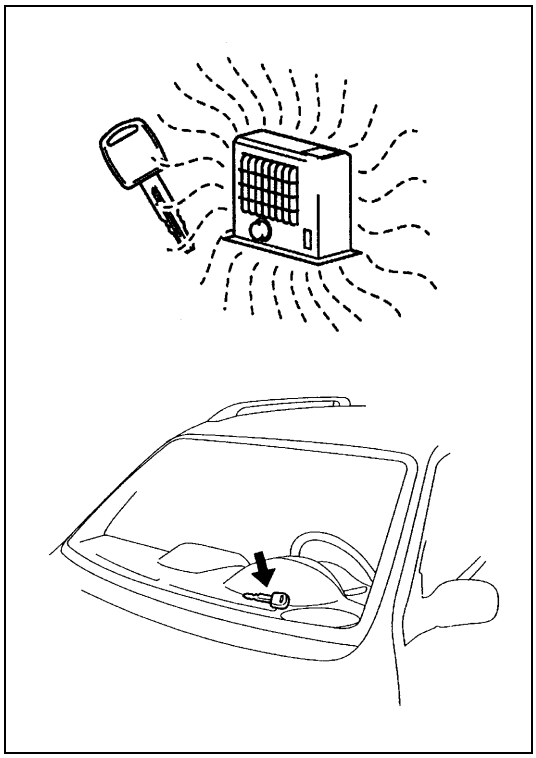

- Do not leave ignition key where high temperature is anticipated.High temperature will cause transponder in ignition key to be abnormal or damaged.

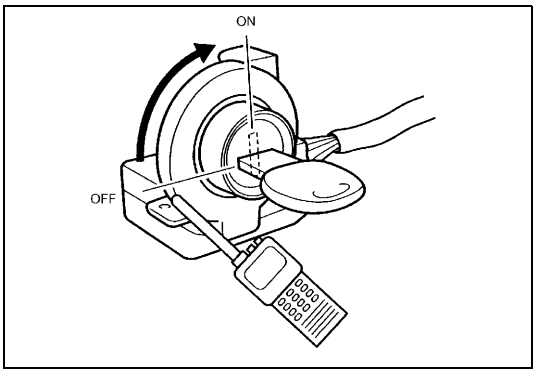

- Do not turn ON ignition switch with a radio antenna placed near Immobilizer Control Module. Or the system may detect abnormal condition and prevent engine from starting.

IMMOBILIZER CONTROL MODULE

REMOBAL

1) Disconnect negative (–) cable at battery.
2) Remove steering column upper and lower cover.
3) Disconnect coupler at Immobilizer Control Module.
4) Remove immobilizer control module (1) from steering lock assembly (2) after removing instrument cluster panel.

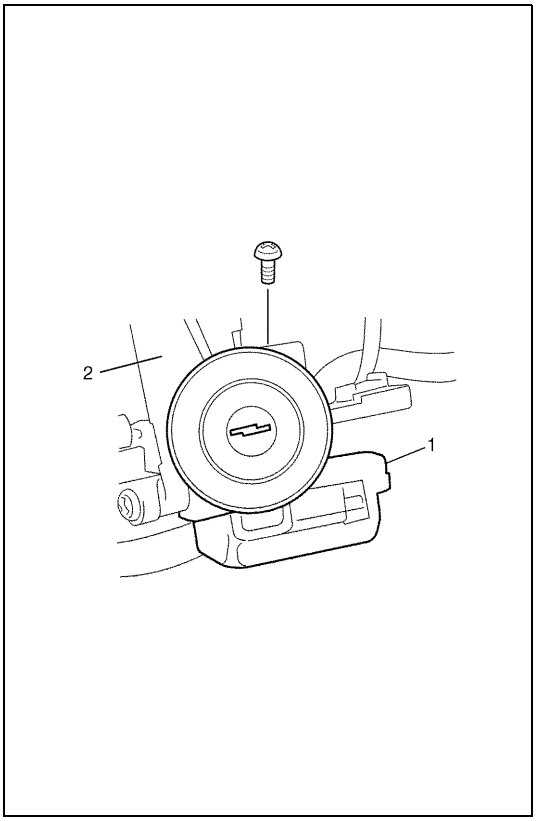

NOTE:

If a screwdriver whose length is 40mm or less is used, the immobilizer control module can be removed without removing the instrument cluster panel.

INSTALLATION

Reverse removal procedure for installation.

NOTE:

After replacing Immobilizer Control Module, be sure to register Transponder code and ECM/Immobilizer Control Module code in Immobilizer Control Module and ECM/ Immobilizer Control Module code in ECM by performing procedure described in "PROCEDURE AFTER IMMOBILIZER CONTROL MODULE REPLACEMENT" in this section.

HOW TO REGISTER IGNITION KEY

Register the ignition key with a built-in transponder in Immobilizer Control Module by using the following procedure.

CAUTION:

When registering the ignition key including a transponder into the immobilizer control module by using Suzuki scan tool, confirm that the knob color of the ignition key to be registered for the vehicle is dark gray. The ignition key with wrong knob color cannot be registered.

1) Prepare SUZUKI scan tool and cartridge for immobilizer control system.

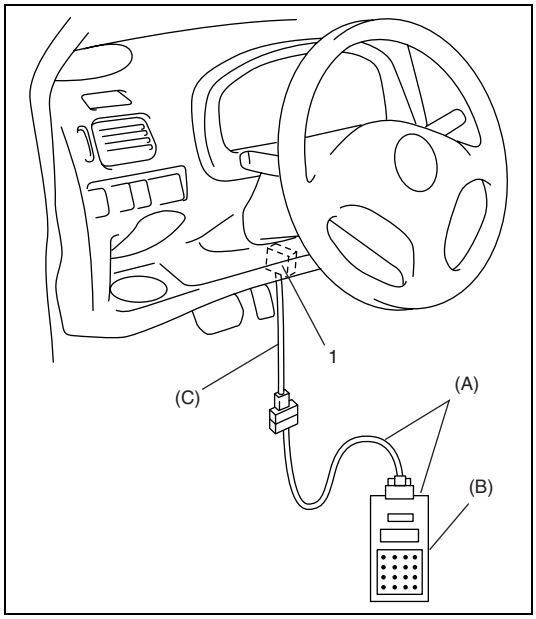

2) With ignition switch OFF, connect SUZUKI scan tool to data link connector (DLC) (1) located on underside of instrument panel at driver's seat side.

(A) : 09931-76011 (SUZUKI scan tool)
(B) : Immobilizer cartridge
(C) : 09931-76030 (16/14 pin DLC cable)

NOTE:

For operation procedure of SUZUKI scan tool, refer to SUZUKI scan tool operator's manual.

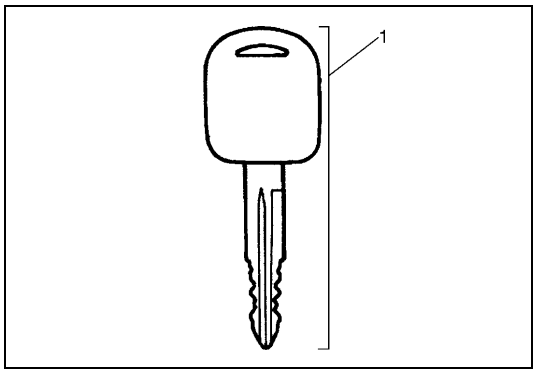

3) Prepare ignition key with a built-in transponder (1). And then turn ignition switch ON by using it.
4) Number of Transponder codes for ignition key with a built-in transponder that can be registered in Immobilizer Control Module is limited to 4. If needed, clear all Transponder codes for ignition key with a built-in transponder that have been registered in Immobilizer Control Module by executing the "CLR. TRANS COD (CLEAR TP CODE)" command in the SELECT MODE menu by using SUZUKI scan tool.

NOTE:

When "CLR. TRANS COD (CLEAR TP CODE)" command is executed with the immobilizer indicator lamp ON, it remains ON even after execution of that command is over. It will start flashing when the ignition switch is turned OFF once and then turned ON after some seconds.

5) Using SUZUKI scan tool, register Transponder code in Immobilizer Control Module by executing “ENT. TRANS COD (ENT. TP CODE)” command in SELECT MODE menu.
6) Make sure that immobilizer indicator lamp lights when ignition switch is turned OFF once and then ON.
7) If any other Transponder code for ignition key with a built-in transponder needs to be registered, repeat above steps 3), 5) and 6).

NOTE:

- **Up to 4 Transponder codes for ignition key with a built-in transponder can be registered.**
- **It is not possible to register the same Transponder code for ignition key with a built-in transponder as the one already registered in Immobilizer Control Module.**

PROCEDURE AFTER IMMOBILIZER CONTROL MODULE REPLACEMENT

When Immobilizer Control Module was replaced, including when replaced because rechecking by using a known-good Immobilizer Control Module was necessary during trouble diagnosis, register Transponder code and ECM/Immobilizer Control Module code in Immobilizer Control Module and ECM/Immobilizer Control Module code in ECM by performing following procedure.

CAUTION:

When registering the ignition key including a transponder into the immobilizer control module by using Suzuki scan tool, confirm that the knob color of the ignition key to be registered for the vehicle is dark gray. The ignition key with wrong knob color cannot be registered.

1) Perform steps 1) and 2) described in “How To Register Ignition Key”.
2) Prepare ignition key with a built-in transponder. And then turn ignition switch ON by using it.
3) Using SUZUKI scan tool, clear all transponder codes registered in Immobilizer Control Module by executing “CLR. TRANS COD (CLEAR TP CODE)” command in SELECT MODE menu.

NOTE:

When “CLR. TRANS COD (CLEAR TP CODE)” command is executed with the immobilizer indicator lamp ON, it remains ON even after execution of that command is over. It will start flashing when the ignition switch is turned OFF once and then turned ON after some seconds.

4) Using SUZUKI scan tool, register Transponder code in Immobilizer Control Module by executing “ENT. TRANS COD (ENT. TP CODE)” command in SELECT MODE menu.
5) Using SUZUKI scan tool, register ECM/Immobilizer Control Module code in both Immobilizer Control Module and ECM by executing “RECORD ECU (RECORD ECM/PCM/ICM)” command in SELECT MODE menu.
6) Make sure that immobilizer indicator lamp lights when ignition switch is turned OFF once and then ON.
7) If any other Transponder code for ignition key with a built-in transponder needs to be registered, repeat above steps 2), 4) and 6).

NOTE:

- **Up to 4 Transponder codes for ignition key with a built-in transponder can be registered.**
- **It is not possible to register the same Transponder code for ignition key with a built-in transponder as the one already registered in Immobilizer Control Module.**

PROCEDURE AFTER ECM REPLACEMENT

When ECM was replaced, including when replaced because rechecking by using a known-good ECM was necessary during trouble diagnosis, register ECM/Immobilizer Control Module code in ECM by performing following procedure.

1) Perform steps 1) and 2) described in "How To Register Ignition Key". And then turn ignition switch ON.
2) Using SUZUKI scan tool, register ECM/Immobilizer Control Module code in ECM by executing "RECORD ECU (RECORD ECM/ICM)" command in SELECT MODE menu.

NOTE:

For operation procedure of SUZUKI scan tool, refer to SUZUKI scan tool operator's manual.

3) Make sure that malfunction indicator lamp lights when ignition switch is turned OFF once and then ON.

SPECIAL TOOL

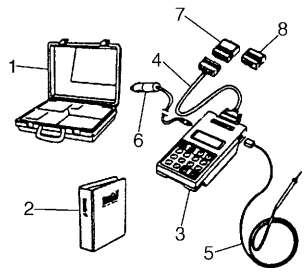	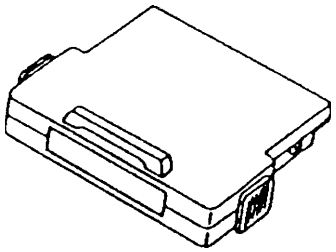	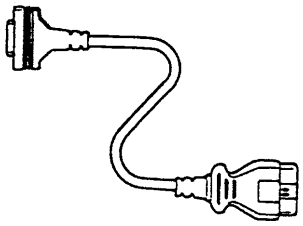	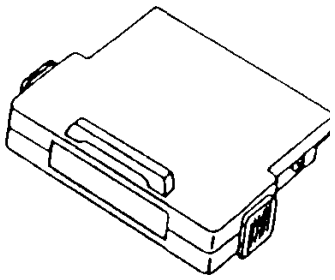
09931-76011 Tech 1A kit See NOTE below.	Immobilizer cartridge of version 1.1 or more	09931-76030 16/14 pin DLC cable	Mass storage cartridge of version 1.5 or more

NOTE:

This kit includs the following items.

1. Storage case, 2. Operator's manual, 3. Tech 1A, 4. DLC cable, 5. Test lead/probe, 6. Power source cable, 7. DLC cable adaptor, 8. Self-test adaptor

SECTION 9

BODY SERVICE

WARNING:

For vehicles equipped with Supplemental Restraint (Air Bag) System:

- **Service on and around the air bag system components or wiring must be performed only by an authorized SUZUKI dealer. Refer to "Air Bag System Components and Wiring Location View" under "General Description" in air bag system section in order to confirm whether you are performing service on or near the air bag system components or wiring. Please observe all WARNINGS and "Service Precautions" under "On-Vehicle Service" in air bag system section before performing service on or around the air bag system components or wiring. Failure to follow WARNINGS could result in unintentional activation of the system or could render the system inoperative. Either of these two conditions may result in severe injury.**
- **Technical service work must be started at least 90 seconds after the ignition switch is turned to the "LOCK" position and the negative cable is disconnected from the battery. Otherwise, the system may be activated by reserve energy in the Sensing and Diagnostic Module (SDM).**
- **When body servicing, if shock may be applied to air bag system component parts, remove those parts beforehand. (Refer to Section 10B.)**

NOTE:

Fasteners are important attaching parts in that they could affect the performance of vital components and systems, and / or could result in major repair expense. They must be replaced with one of the same part number of with an equivalent part if replacement becomes necessary.
Do not use a replacement part of lesser quality or substitute a design. Torque values must be used as specified during reassembly to assure proper retention of these parts.

CONTENTS

GLASS, WINDOWS AND MIRRORS 9-2
FRONT DOOR GLASS 9-2
FRONT DOOR WINDOW REGULATOR 9-6
DOOR MIRROR 9-7
REAR DOOR GLASS (IF EQUIPPED) 9-8
REAR DOOR WINDOW REGULATOR 9-11
WINDOW SHIELD 9-12
QUARTER WINDOW 9-17
BACK DOOR GLASS 9-18
BODY STRUCTURE 9-19
FRONT DOOR ASSEMBLY 9-19
REAR DOOR ASSEMBLY 9-22
BACK DOOR ASSEMBLY 9-23
HOOD 9-25
FRONT FENDER 9-26
FRONT BUMPER AND REAR BUMPER 9-27
ROOF RAIL (IF EQUIPPED) 9-28
BODY DIMENSIONS 9-29
ENGINE ROOM 9-29
BACK DOOR 9-30
SIDE BODY 9-31
UNDER BODY 9-34
PANEL CLEARANCE 9-36
INSTRUMENTATION AND DRIVER INFORMATION 9-38
INSTRUMENT PANEL 9-38
SEATS 9-40
FRONT SEAT 9-40
REAR SEAT 9-41
SECURITY AND LOCKS 9-42
FRONT DOOR LOCK ASSEMBLY 9-42
REAR DOOR LOCK ASSEMBLY (IF EQUIPPED) 9-44
BACK DOOR LOCK ASSEMBLY 9-45
KEY CODING 9-46
KEY USAGE AND IDENTIFICATION 9-46
IGNITION SWITCH LOCK CYLINDER 9-47
EXTERIOR AND INTERIOR TRIM 9-47
FLOOR CARPET 9-47
HEAD LINING 9-48
PAINT AND COATINGS 9-50

ANTI-CORROSION TREATMENT 9-50
SEALANT APPLICATION AREAS..... 9-51
UNDER COATING APPLICATION AREAS.. 9-58
ANTI-CORROSION COMPOUND
APPLICATION AREA 9-60

REQUIRED SERVICE MATERIAL 9-61

GLASS, WINDOWS AND MIRRORS

FRONT DOOR GLASS

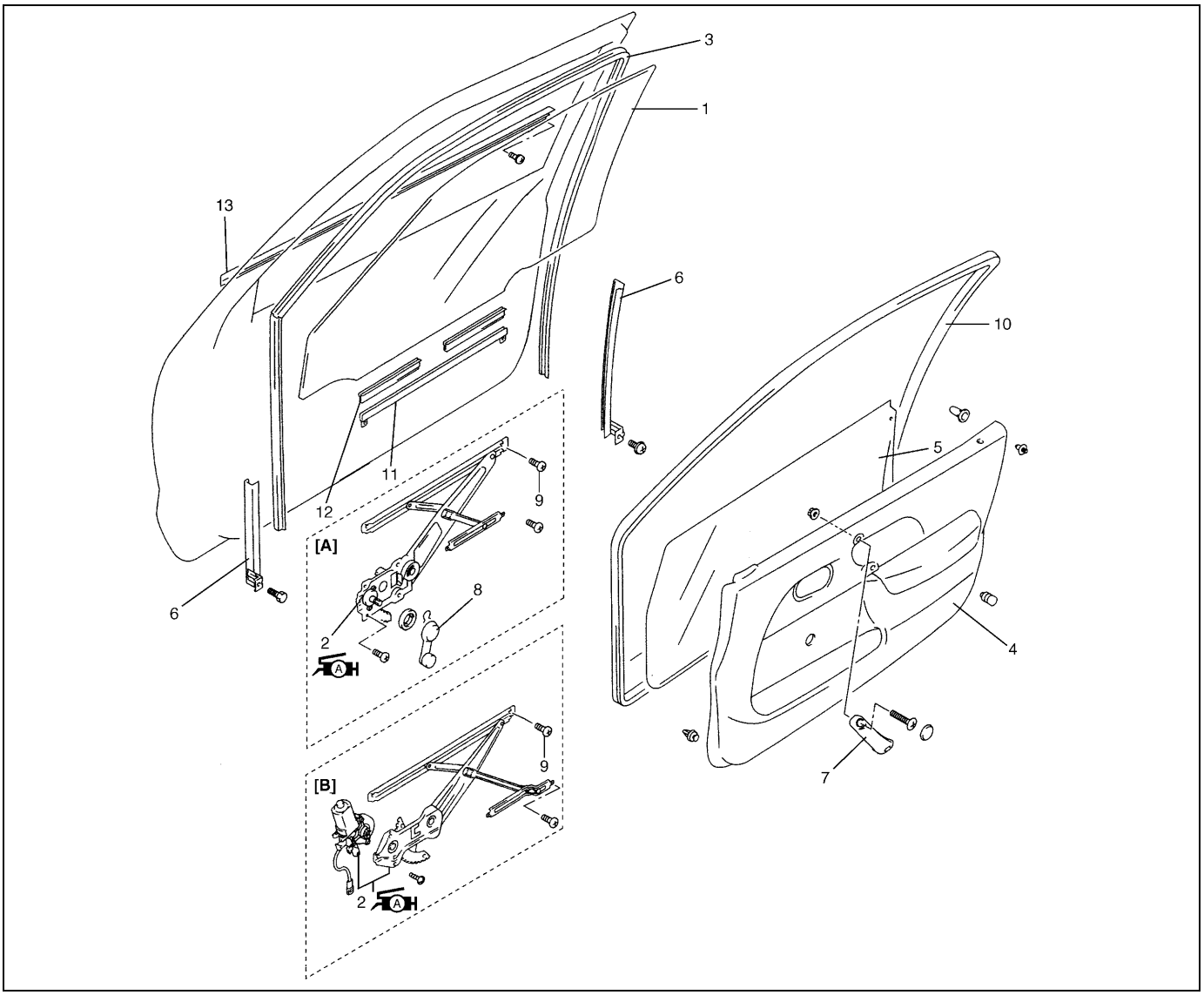

	1. Door glass	6. Door sash	11. Glass bottom channel
A H	2. Window regulator assembly : Apply lithium grease 99000-25010 to sliding part.	7. Front door grip	12. Glass bottom rubber
	3. Glass run	8. Window regulator handle	13. Front door outer weather-strip
	4. Door trim	9. Bottom channel attaching screw	[A] Without power window model
	5. Door sealing cover	10. Door opening weather-strip	[B] With power window model

REMOVAL

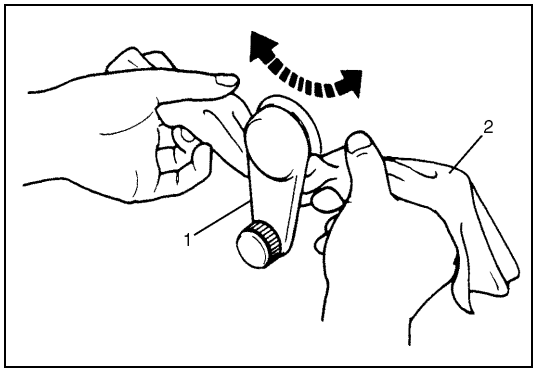

1) Remove window regulator handle (1) (if equipped).
   For its removal, pull off snap by using a cloth (2) as shown in figure.

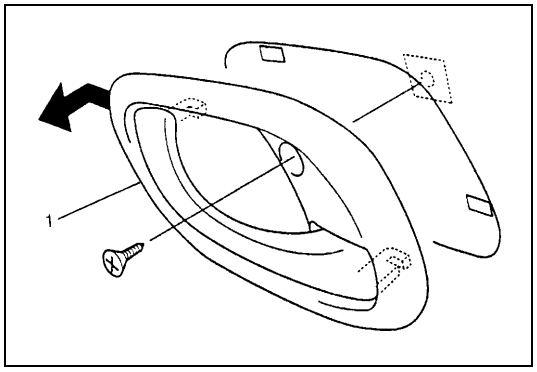

2) Remove inside handle bezel (1).

3) Remove inside door grip.
4) Remove mirror inner garnish.

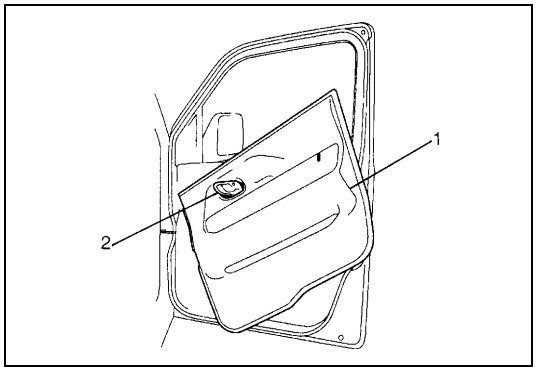

5) Remove door trim (1).
   With inside handle bezel (2) tilted as shown in figure, turn door trim (1) 90° counterclockwise to remove it.
   And disconnect power window switch lead wire at coupler (if equipped).

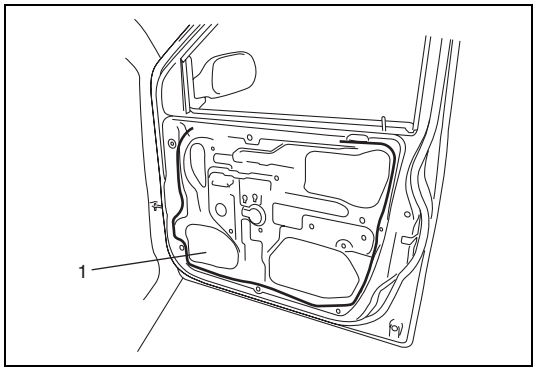

6) Remove door sealing cover (1).
7) Remove door mirror.
   Refer to “DOOR MIRROR” in this section.

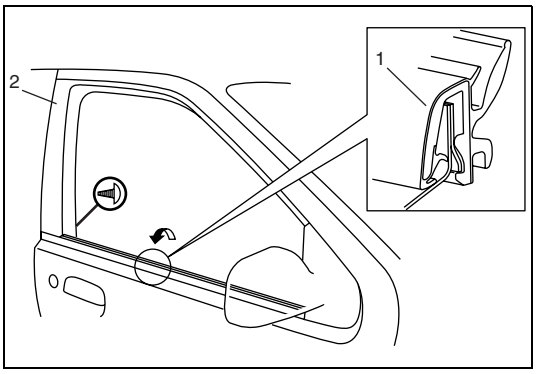

8) Remove outer weather-strip (1).
Lower window all the way down. Then, use a tape-wrapped putty knife to pry off outer weather-strip.

NOTE:

When removed outer weather-strip (1) from door panel (2), be careful not to deformation for outer weather-strip (1).

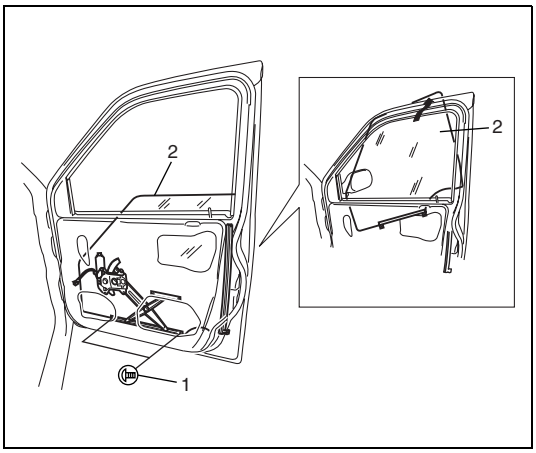

9) Remove bottom channel attaching screws (1).
10) When removing door glass (2), turn door glass 90° counterclockwise to remove it.

INSTALLATION

Reverse removal procedure to install door glass noting the following instructions.

- If there is deformity for glass run, replace new one.
- Tighten bottom channel attaching screws. Tighten rear screw first, and then tighten front screw.

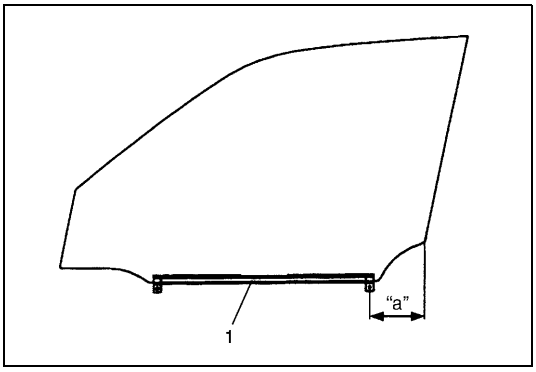

- Glass fitted position of bottom channel (1) is as shown in figure.

Glass fitted position of bottom channel "a"
3-door model : 335.5 - 338.5 mm (13.21 - 13.33 in.)
5-door model : 90.8 - 93.8 mm (3.57 - 3.69 in.)

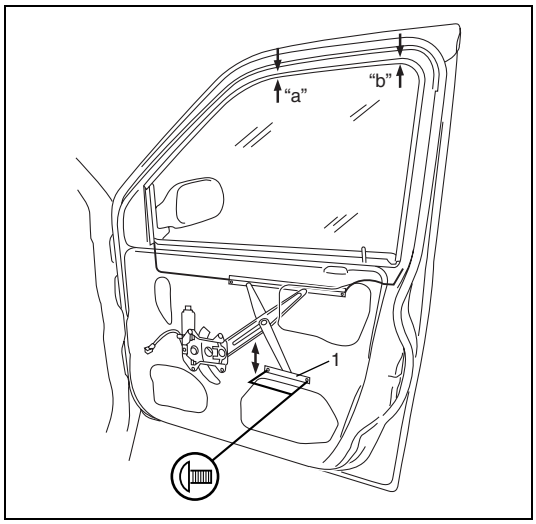

- Adjust equalizer (1) of window regular so that measurement "a" and "b" are equal.

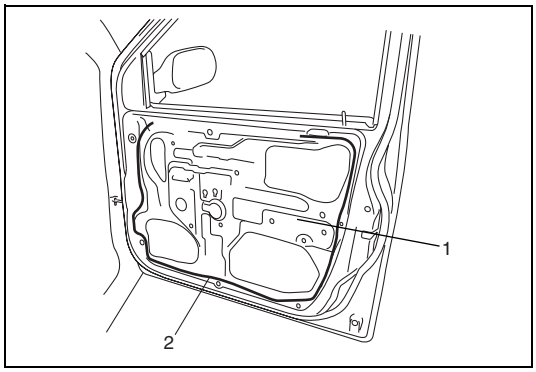

- Secure door sealing cover (1) with adhesive (2).

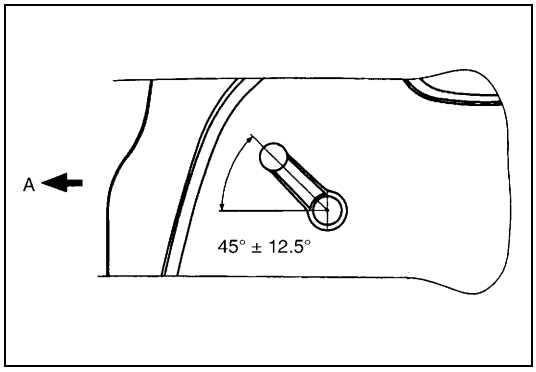

- Install door window regulator handle (1) so that it has a 45° ±12.5° angle when glass is fully closed as shown in figure

A : Front

FRONT DOOR WINDOW REGULATOR

REMOVAL

1) Remove door glass referring to “FRONT DOOR GLASS” in this section.
2) Disconnect power window motor lead wire at coupler and loosen clamp, if equipped.
3) Loosen regulator mounting screws (1) and take out regulator through hole (2) as shown in figure.

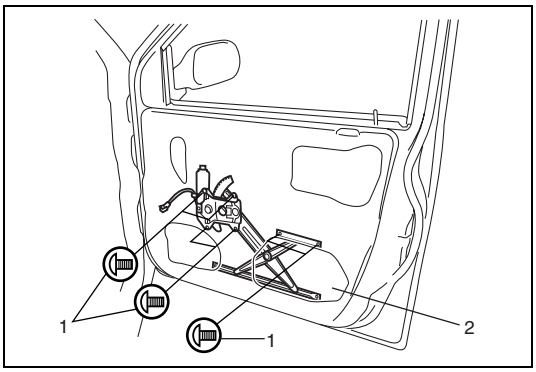

INSPECTION

Check the following parts :

- Check regulator sliding and rotating parts for greasing (1).
- Check rollers (2) for wear and damage.

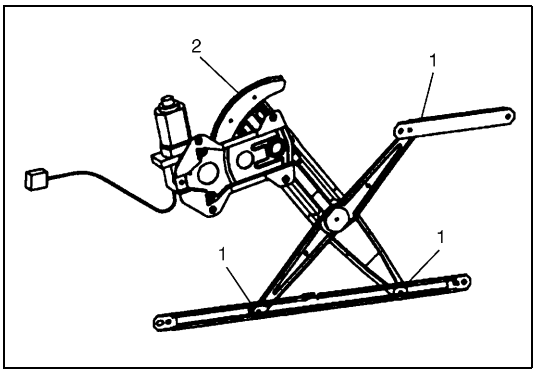

INSTALLATION

Reverse removal procedure to install window regulator noting the following instruction.

- When installing glass, check that the top part of the glass contacts the glass run evenly and that the glass moves up and down smoothly.
  If the glass is tilted with respect to the glass run, adjust equalizer (1) of window regulator so that measurement “a” and “b” are equal.

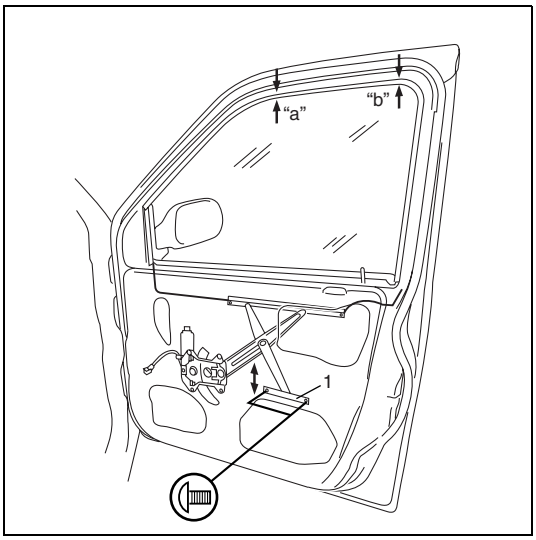

DOOR MIRROR

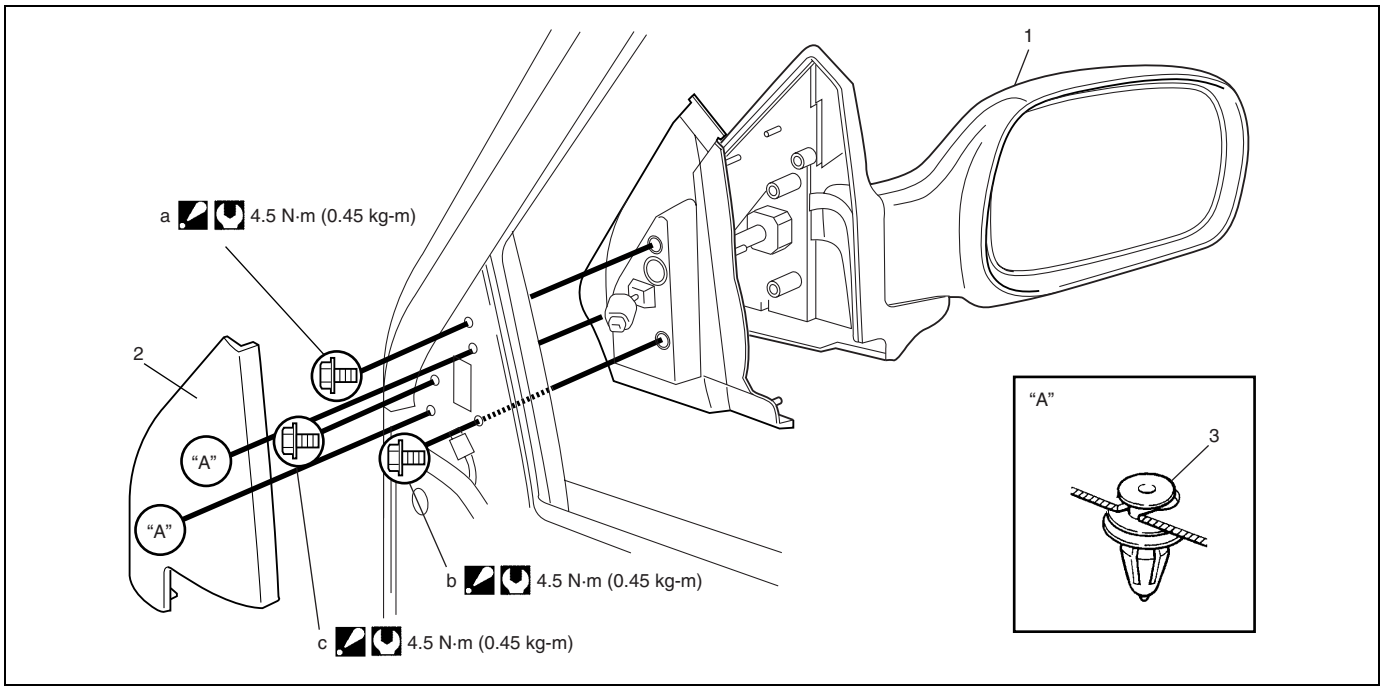

1. Door mirror	a. Mirror mount screw	Tightening order : a → b → c
2. Inner garnish	b. Mirror mount screw	Tightening torque
3. Clip	c. Mirror mount screw	

REMOVAL AND INSTALLATION

When removing or installing door mirror, refer to above figure.

REAR DOOR GLASS (IF EQUIPPED)

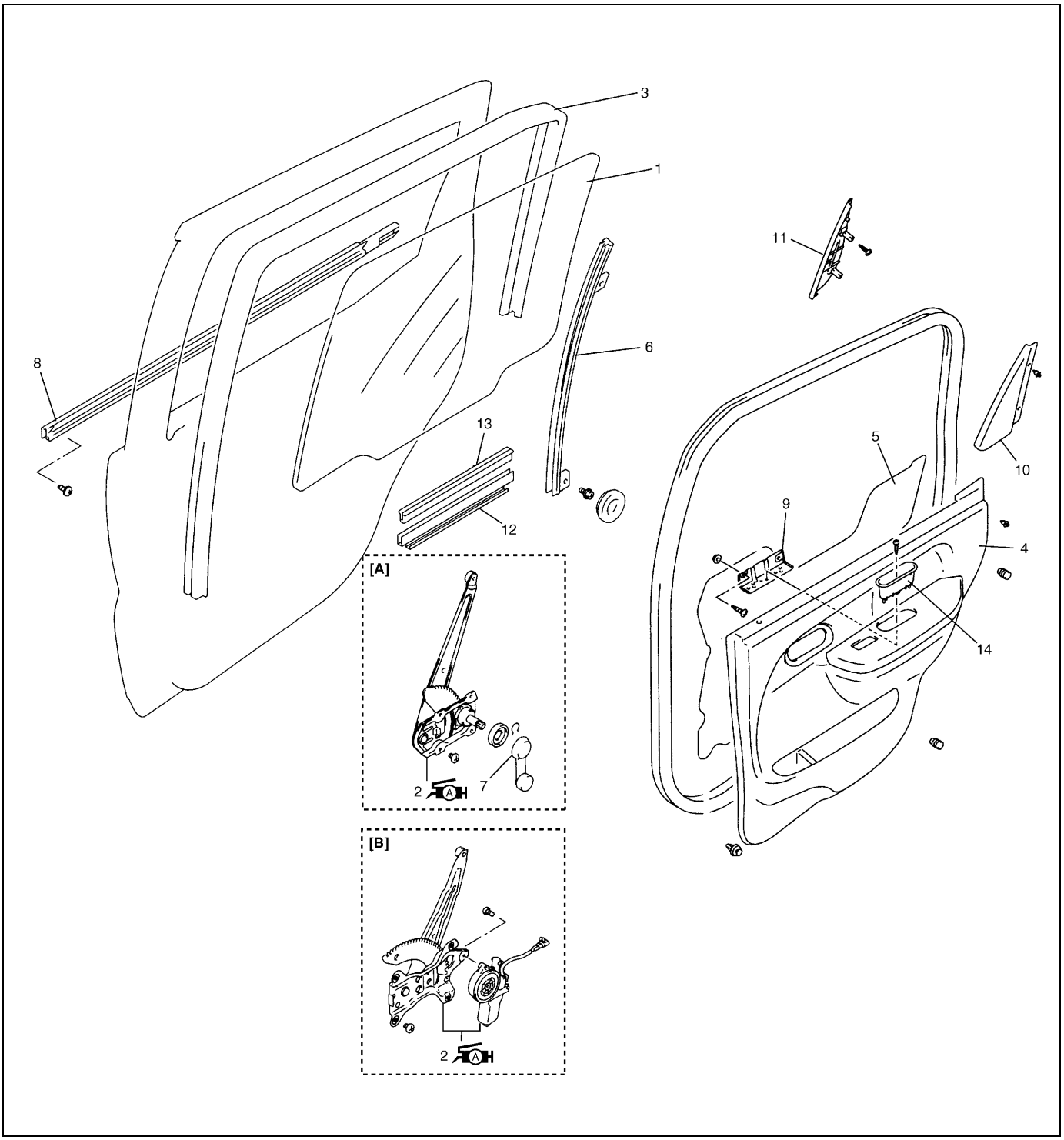

	1. Door glass	7. Window regulator handle	13. Glass bottom rubber
A H	2. Window regulator assembly : Apply lithium grease 99000-25010 to moving section.	8. Rear door outer weather-strip	14. Door inside pull handle case
	3. Glass run	9. Rear door inside pull handle bracket	[A] : Without power window model
	4. Door trim	10. Rear door inner garnish	[B] : With power window model
	5. Door sealing cover	11. Rear door outer garnish	
	6. Door sash	12. Glass bottom channel	

REMOVAL

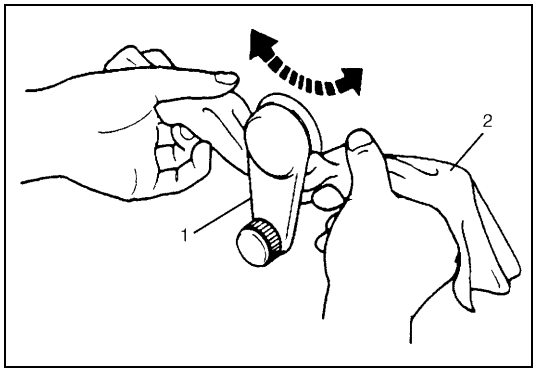

1) Remove window regulator handle (1) (if equipped).
   For its removal, pull off snap by using a cloth (2) as shown in figure.

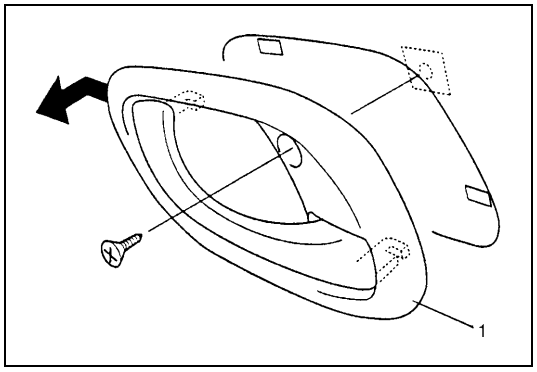

2) Remove inside handle bezel (1).

3) Remove door inside pull handle case fitting screw.
4) Remove rear door inner garnish.

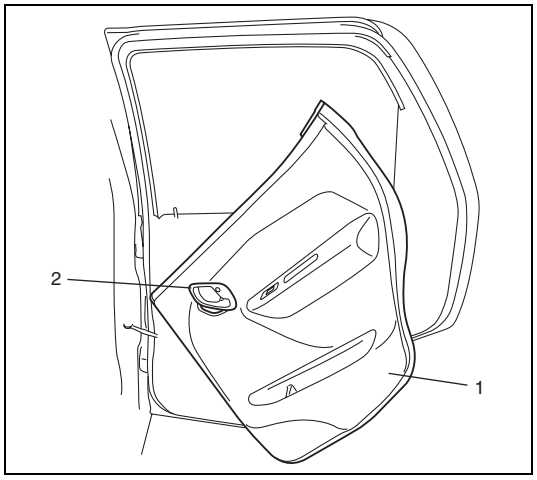

5) Remove door trim (1).
   With inside handle bezel (2) tilted as shown in figure, turn door trim 90° counterclockwise to remove it.
   And disconnect power window switch lead wire at coupler (if equipped).

6) Remove door inside pull handle bracket.

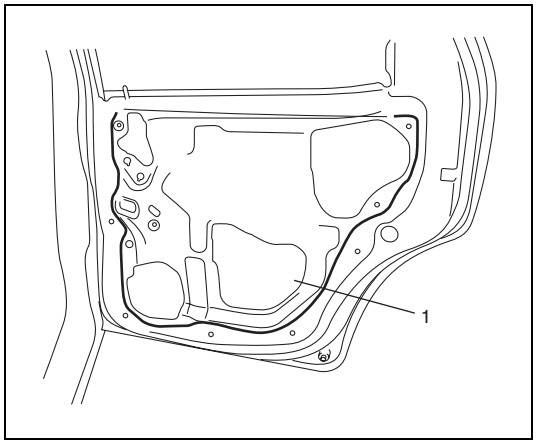

7) Remove door sealing cover (1).

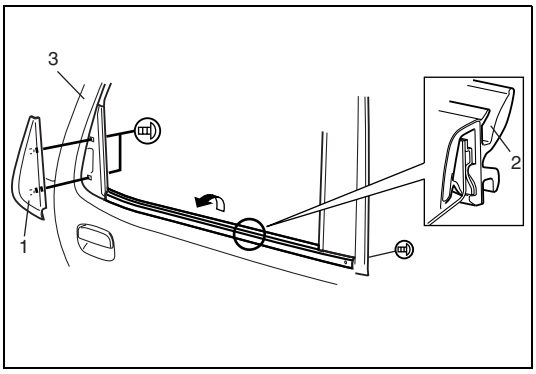

8) Remove rear door outer garnish (1).
9) Remove outer weather-strip (2).
   Lower window all the way down. Then, use a tape-wrapped putty knife (or screwdriver) to pry off outer weather-strip.

NOTE:

When removed outer weather-strip (2) from door panel (3), be careful not to deformation for outer weather-strip (2).

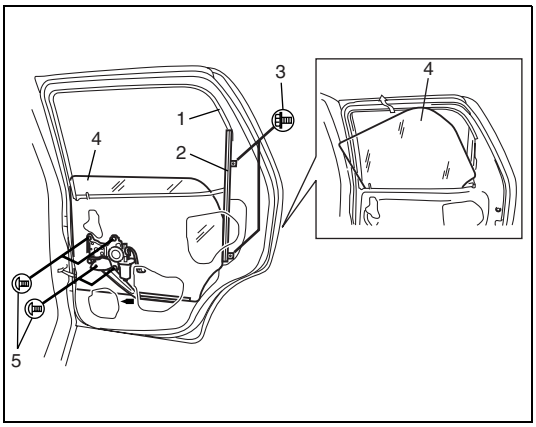

10) Detach rear part of glass run (1) from sash (2) and remove sash (2) by removing 2 screws (3).
11) Loosen window regulator mounting screws (5).
12) When removing door glass (4), turn door glass 90° counterclockwise to remove it.

INSTALLATION

Reverse removal procedure to install door glass noting the following instructions.

- If there is deformity for glass run, replace new one.
- Tighten bottom channel attaching screws. Tighten rear screw first, and then tighten front screw.

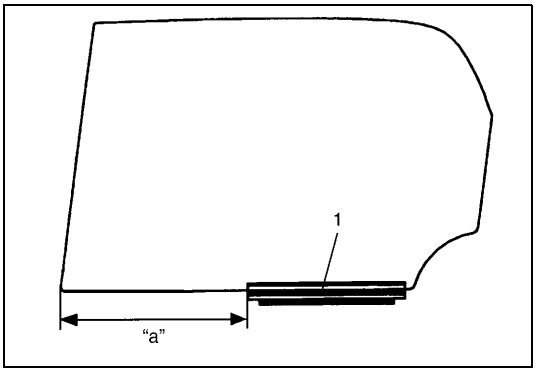

- Glass fitted position of bottom channel (1) is as shown in figure.

Glass fitted position of bottom channel
“a” : 201.9 - 204.9 mm (7.95 - 8.07 in.)

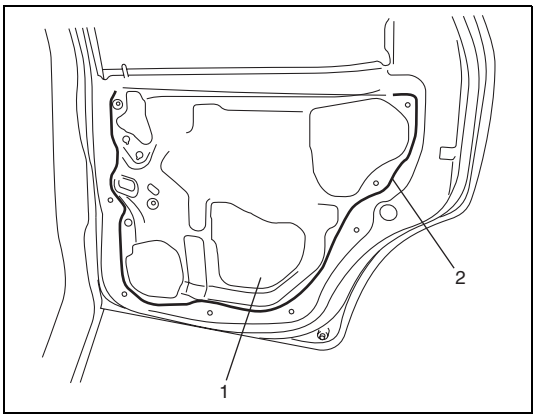

- Secure door sealing cover (1) with adhesive (2).

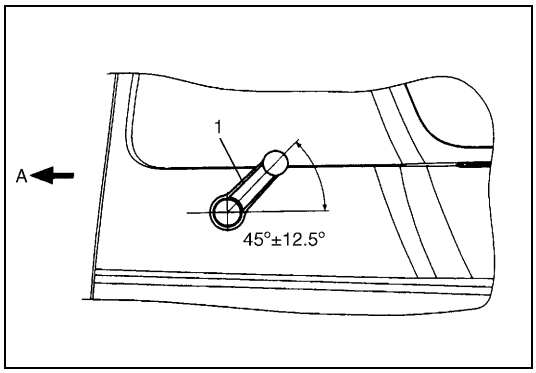

- Install door window regulator handle (1) so that it has a 45° ±12.5° angle when glass is fully closed.

A : Front

REAR DOOR WINDOW REGULATOR

REMOVAL

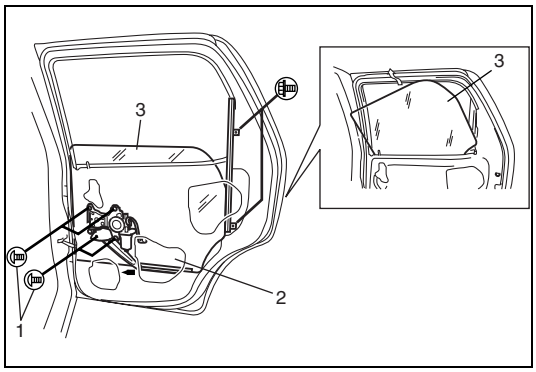

1) Remove door glass (3) referring to “REAR DOOR GLASS” in this section.
2) Loosen regulator mounting screws (1) and take out regulator through hole (2) as shown.

INSPECTION

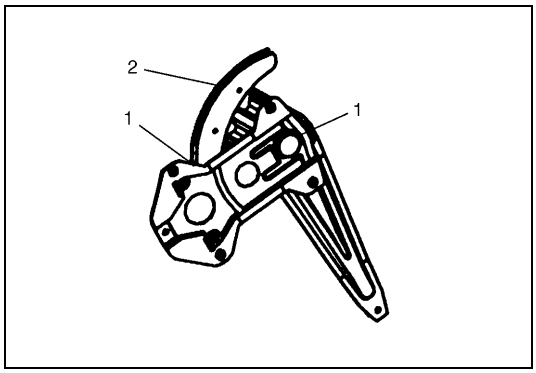

Check the following point :

- Check regulator sliding and rotating parts for greasing (1).
- Check rollers (2) for wear and damage.

INSTALLATION

Reverse removal procedure to install window regulator noting the following instruction.

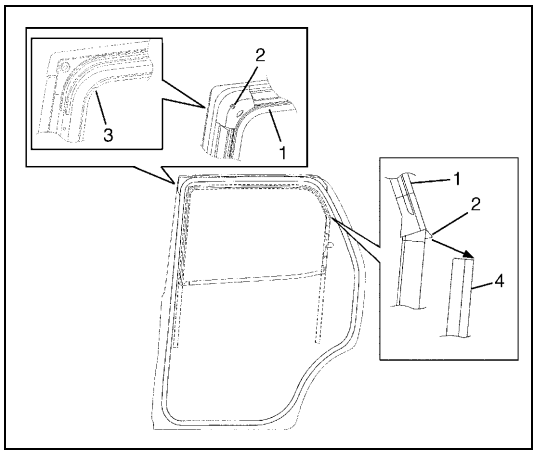

- When glass run (1) is installed, fit glass run convex part (2) to door panel cut part (3) and door sash (4).

WINDOW SHIELD

The front windshield is installed by using a special type of adhesive (that is, one component urethane adhesive used with primer). For the Windshield replacement, it is important to use an adhesive which provides sufficient adhesion strength and follow the proper procedure.

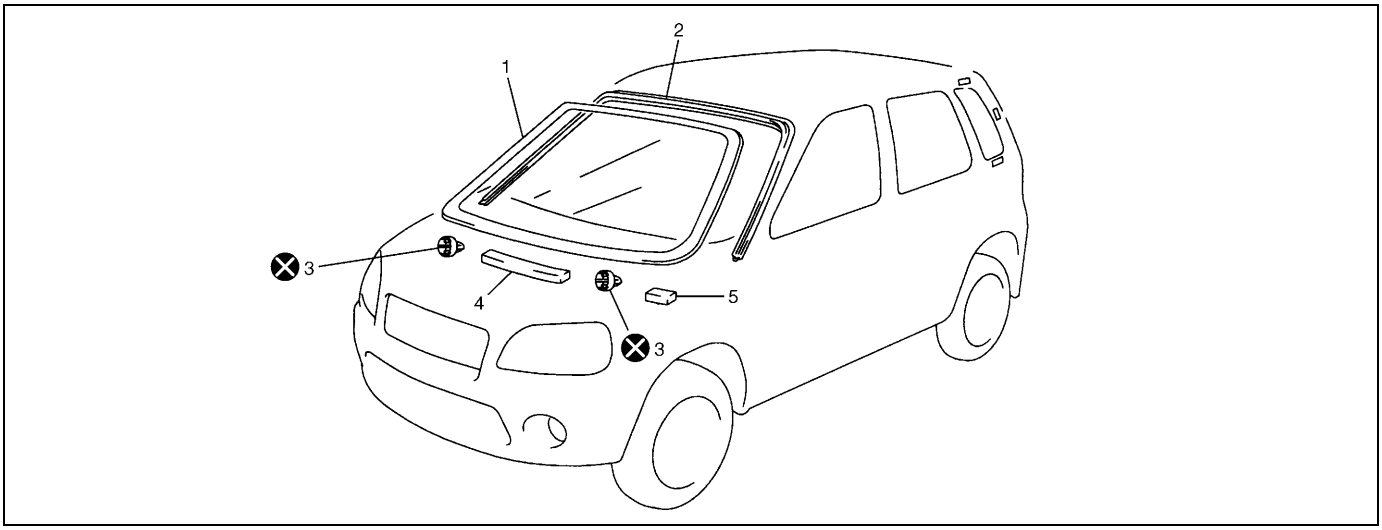

1. Windshield glass	3. Stopper	5. Side spacer
2. Windshield molding	4. Center spacer	⊗ Do not reuse.

CAUTION:

- **Described in this section is the glass replacement by using 3 types of primers and 1 type of adhesive made by YOKOHAMA (one component urethane adhesive to be used with primer in combination). When using primer and adhesive made by other manufacturers, be sure to refer to handling instructions supplied with them. Negligence in following such procedure or misuse of the adhesive in any way hinders its inherent adhesive property. Therefore, before the work, make sure to read carefully the instruction and description given by the maker of the adhesive to be used and be sure to follow the procedure and observe each precaution throughout the work.**
- **Should coated surface be scratched or otherwise damaged, be sure to repair damaged part, or corrosion may start from there.**

Use an adhesive of above mentioned type which has the following property.

Glass adhesive shearing strength

: 40 kg / cm^2 (569 lb / in^2) or more

Adhesive materials and tools required for removal and installation.

- One component urethane adhesive and primers used in combination (For one sheet of windshield).
  - Adhesive (470 g (15.7 oz.))
  - Primer for glass (30 g (1.0 oz.))
  - Primer for body (30 g (1.0 oz.))
  - Primer for molding (30 g (1.0 oz.))
- Eyeleteer
- Piano string
- Windshield knife
- Brush for primer application (2 pcs)
- Knife
- Rubber sucker grip
- Sealant gun (for filling adhesive)
- Putty spatula (for correcting adhered parts)

REMOVAL

1) Clean both inside and outside of glass and around it.
2) Remove wiper arms and garnish.
3) Using tape, cover body surface around glass to prevent any damage.
4) Remove rear view mirror, sunvisor, and front pillar trims (right & left).
5) If necessary, remove instrument panel. Refer to “INSTRUMENT PANEL” in this section.
6) If necessary, remove head lining. Refer to “HEAD LINING” in this section.
7) Remove (or cut) windshield molding.

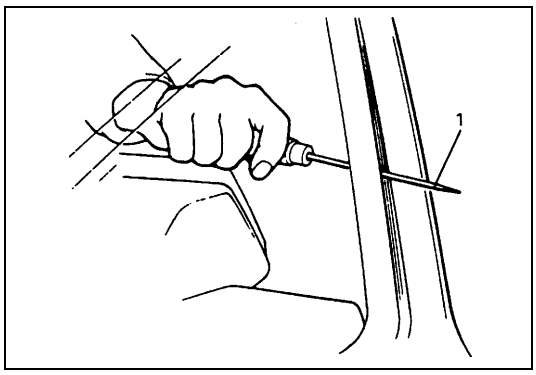

8) Drill hole with eyeleteer (1) through adhesive and let piano string through it.

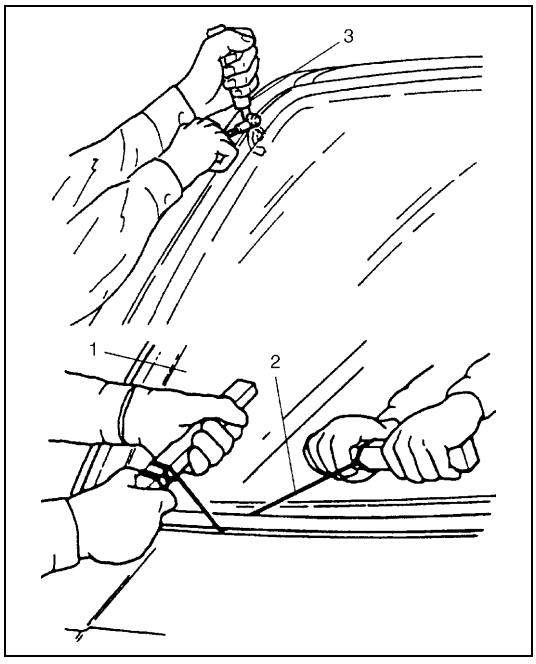

9) Cut adhesive all around windshield (1) with piano string (2). When using tool, windshield knife (3), to cut adhesive, be careful not to cause damage to windshield. Use wire to cut adhesive along lower part of windshield.

NOTE:

Use piano string (2) as close to glass as possible so as to prevent damage to body and instrument panel.

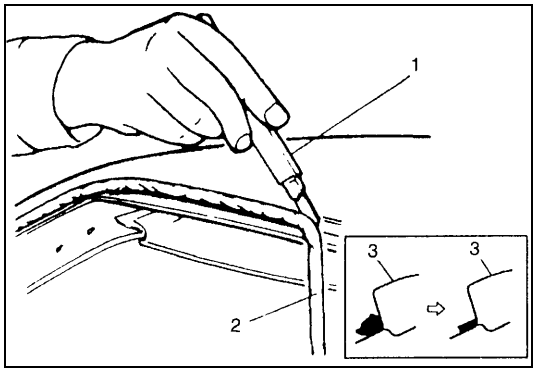

10) Using knife (1), smoothen adhesive (2) remaining on body side (3) so that it is 1 to 2 mm thick all around.

NOTE:

Before using knife (1), clean it with alcohol or the like to remove oil from it.

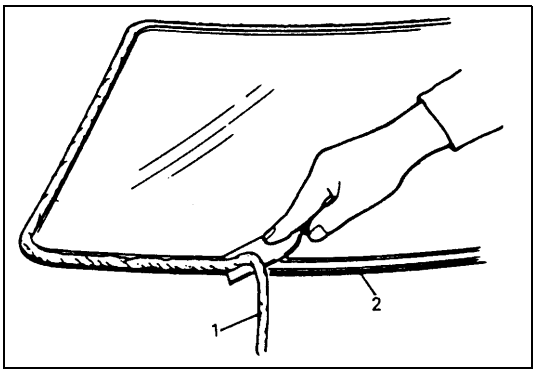

11) When reusing windshield, remove the adhesive (1) from it, using care not to damage primer coated surface (2).

INSTALLATION

1) Using cleaning solvent, clean windshield edge where windshield glass is to be adhered. (Let it dry for more than 10 minutes.)

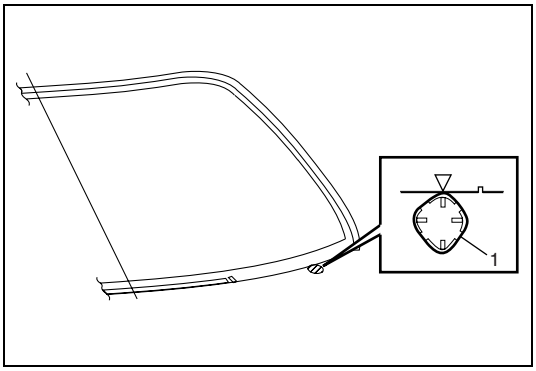

2) Install new glass stoppers (1) (2 pieces) to lower side of windshield.

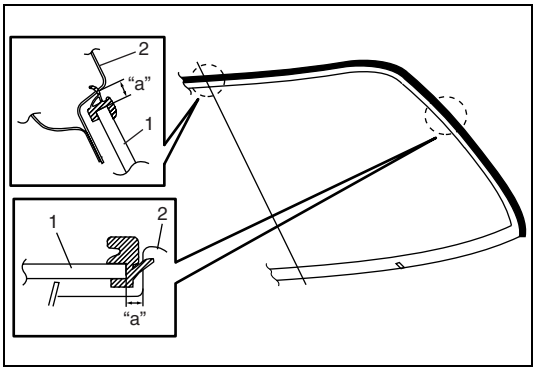

3) To determine installing position of glass (1) to body (2), position glass against body so that clearance between upper end of glass (1) and body (2) is approximately 5 mm (0.197 in.) and clearances between each side end (right & left) of glass (1) and body (2) are even. Then mark mating marks on glass (1) and body (2) as shown. Upper clearance can be adjusted by moving glass stoppers position.

Windshield clearance
"a" : 5 mm (0.197 in.)

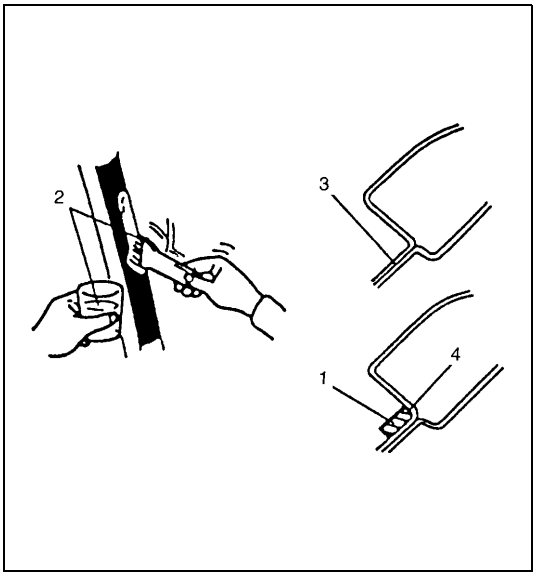

4) Clean contact surfaces of old adhesive (4), paint or bare metal thoroughly.
If surfaces of paint or bare metal come out, apply primer (2) for body with caution not to apply primer (2) to surface of adhesive remaining on body.

NOTE:

- **Be sure to refer to primer maker's instruction for proper handling and drying time.**
- **Do not touch body and old adhesive surfaces where glass is to be adhered.**

1.	Do not apply primer
3.	Apply primer

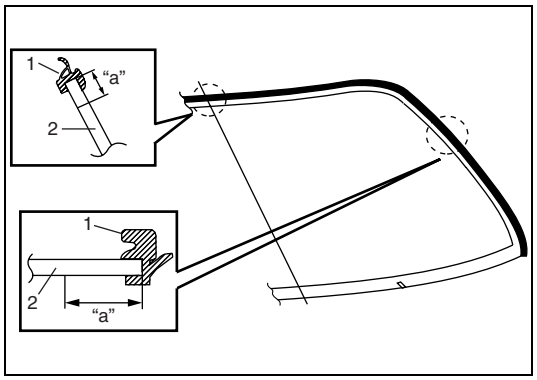

5) Install new molding (1) to glass (2).
6) Clean glass surface to be adhered to body with clean cloth. If cleaning solvent is used, let it dry for more than 10 minutes.

Cleaning Area for windshield (distance from the edge of glass or molding)
"a" : 30 - 50 mm (1.18 - 1.97 in.)

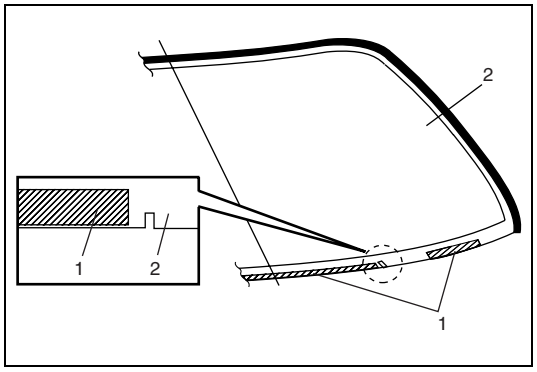

7) Install new spacer (1) to glass (2).

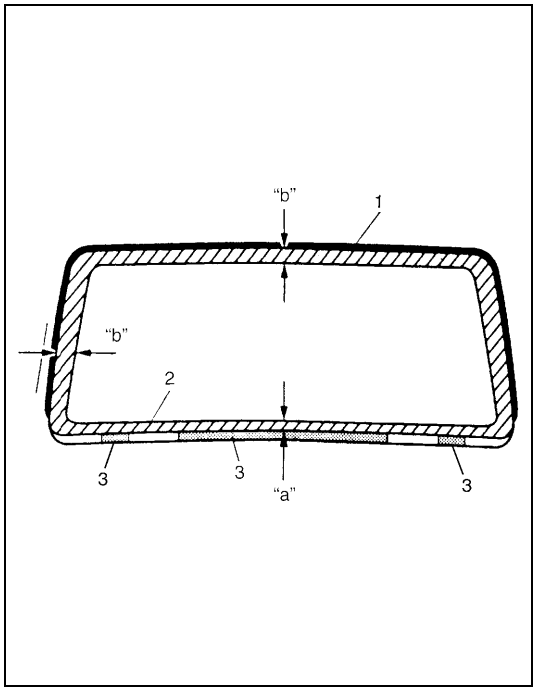

8) Using new brush, apply sufficient amount of primer for glass along glass surface to be adhered to body.

NOTE:

- **Be sure to refer to maker's instruction for proper handling and drying time.**
- **Do not apply primer on outside of ceramic coated surface.**
- **Do not touch primer coated surface.**

Width applied primer for windshield
"a" : 22 mm (0.87 in.)
"b" : 15 mm (0.59 in.)

1. Molding
2. Fastener
3. Spacer

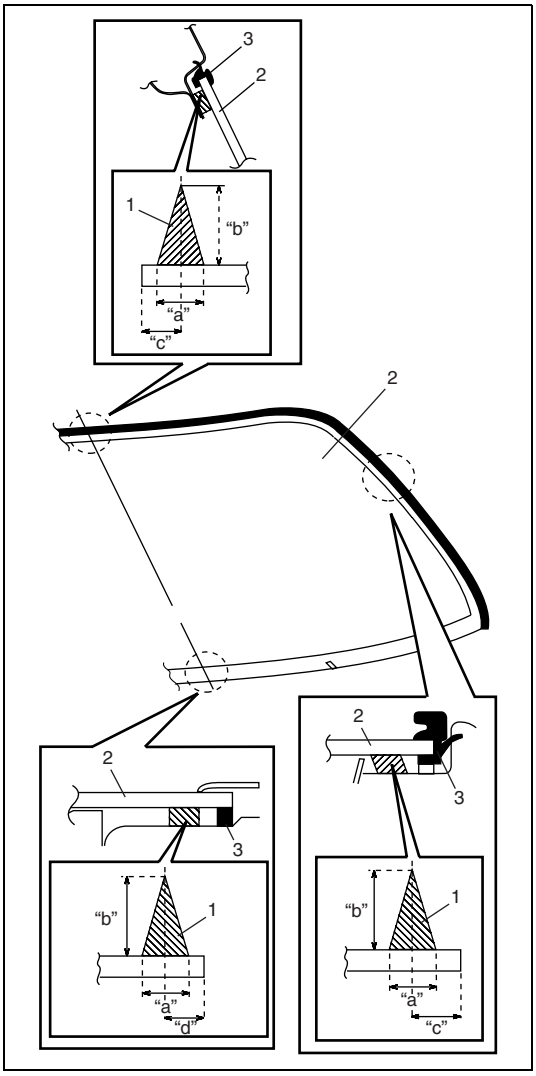

9) Apply primer for molding along molding surface all around.

10) Apply adhesive (1) referring to figure.

NOTE:

- **Press glass (2) against fittings surface of body panel quickly after adhesive (1) is applied.**
- **Use of rubber sucker grip is helpful to hold and carry glass after adhesive (1) is applied.**
- **Perform steps 8) to 9) within 10 min. to ensure sufficient adhesion.**
- **Be sure to refer to adhesive maker's instruction for proper handling and drying time.**
- **Start from bottom side of glass (2).**
- **Be careful not to damage primer.**

Adhesive amount specifications and position for windshield
Width "a" : Approx. 7 mm (0.27 in.)
Height "b" : Approx. 15 mm (0.59 in.)
Position "c" : Approx. 10 mm (0.39 in.) for front, rear and upper sections
Position "d" : Approx. 17 mm (0.67 in.) for bottom section.

3. Molding

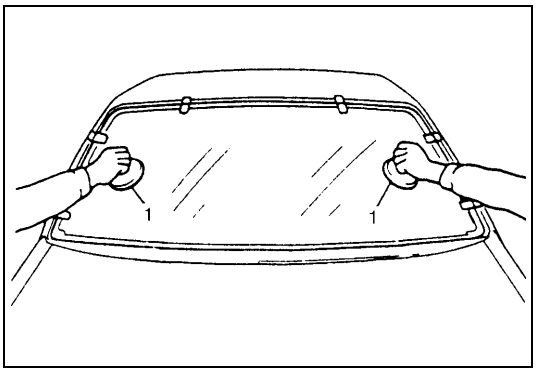

11) Holding rubber sucker grips (1), place glass onto body by aligning mating marks marked in step 3) and press it.

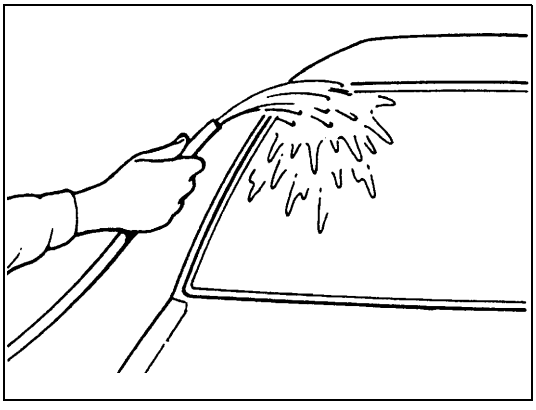

12) Check for water leakage by pouring water over windshield through hose. If leakage is found, dry windshield and fill leaky point with adhesive. If water still leaks even after that, remove glass and start installation procedure all over again.

NOTE:

- **Do not use high pressure water.**
- **Do not blow compressed air directly at adhesive applied part when drying.**
- **Do not use infrared lamp or like for drying.**

CAUTION:

Upon completion of installation, note the following.

- **Sudden closing of door before adhesive is completely set may cause glass to become loose or to come off. Therefore, if door is opened or closed before adhesive is completely set, make sure to open all door glasses and use proper care.**
- **If molding is not securely in place, hold it down with a tape until adhesive is completely set.**
- **Each adhesive has its own setting time.**
- **Be sure to refer to its maker's instruction, check setting time of adhesive to be used and observe precautions to be taken before adhesive is set.**
- **Refrain from driving till adhesive is completely set so as to ensure proper and sufficient adhesion.**

QUARTER WINDOW

REMOVAL AND INSTALLATION

Refer to "WINDSHIELD" in this section as removal and installation procedures are basically the same. However, note the following.

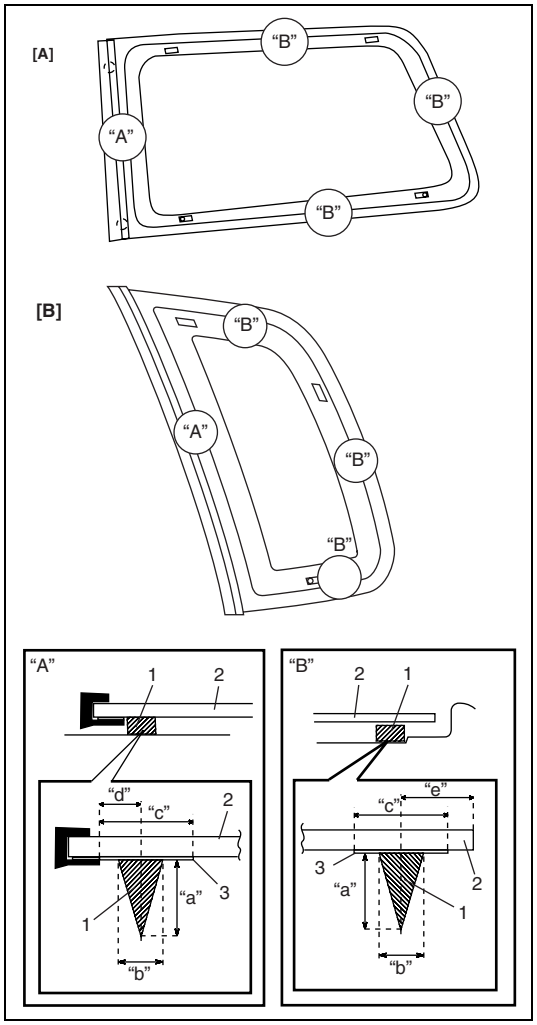

- Observe the following precautions when applying adhesive (1) along glass (2) edge.
- Adhesive (1) should be applied evenly especially in height.
- Be careful not to damage primer (3).
- Press glass against body quickly after adhesive (1) is applied.

Adhesive amount specification and position for quarter window
Height "a" : 13 mm (0.51 in.)
Width "b" : 6 mm (0.24 in.)
Width "c" : 14 mm (0.55 in.)
Position "d" : 5 mm (0.20 in.) for glass front section.
Position "e" : 11 mm (0.43 in.) for glass rear and upper sections
Position "e" : 8 mm (0.31 in.) for 3 door model glass bottom section
Position "e" : 10 mm (0.39 in.) for 5 door model glass bottom section

[A] : 3-door model
[B] : 5-door model

BACK DOOR GLASS

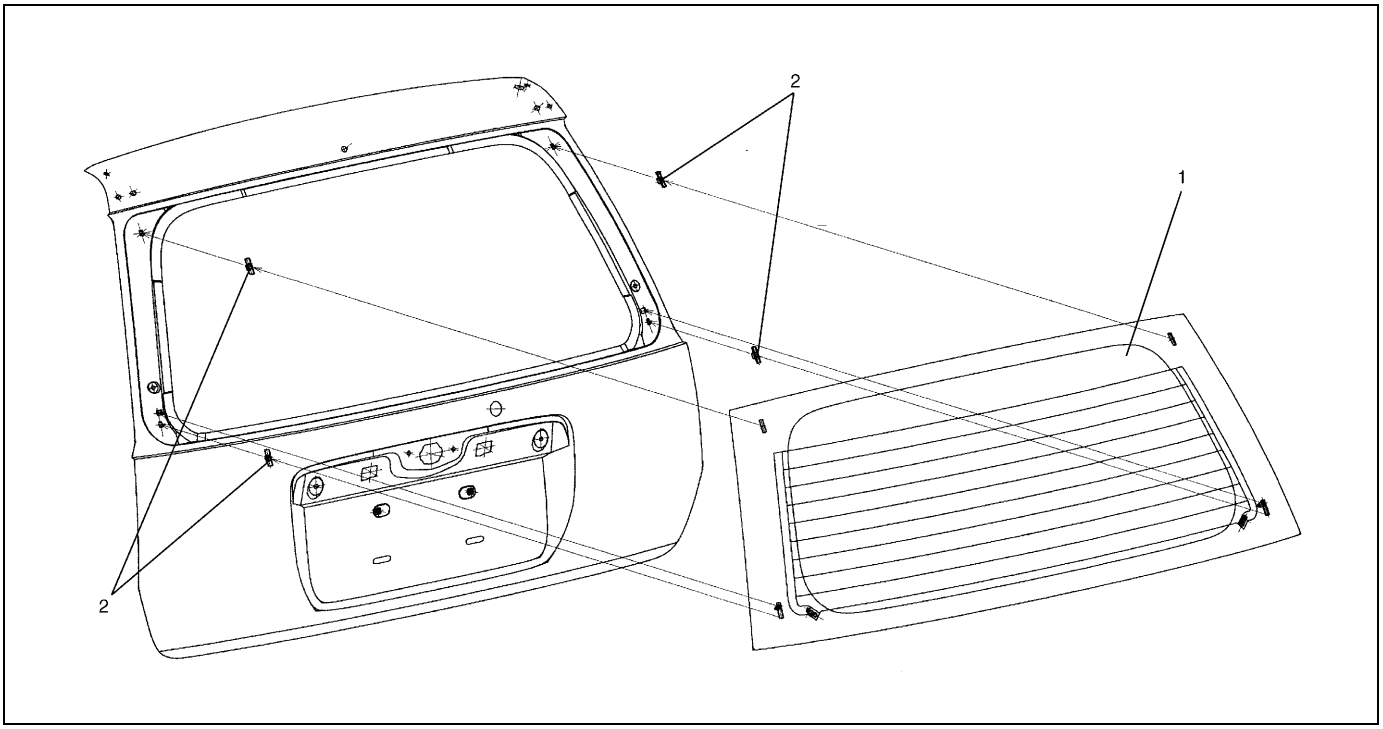

1. Back door glass	2. Fastener

REMOVAL AND INSTALLATION

Refer to “WINDSHIELD” in this section as removal and installation procedures are basically the same. However, note the following.

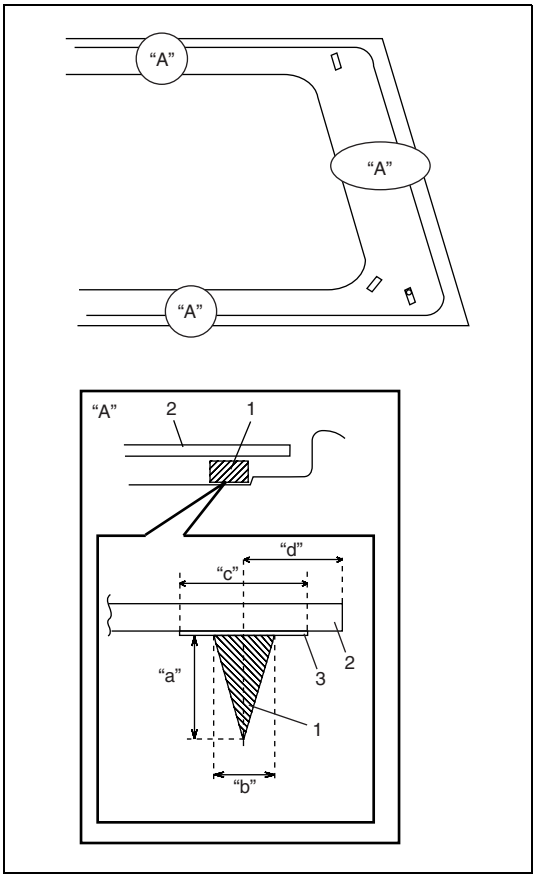

- Observe the following precautions when applying adhesive (1) along glass (2) edge.
- Adhesive (1) should be applied evenly especially in height.
- Be careful not to damage primer (3).
- Press glass against body quickly after adhesive (1) is applied.

Adhesive amount specifications and position for back door glass
Height “a” : 13 mm (0.51 in.)
Width “b” : 6 mm (0.24 in.)
Width “c” : 14 mm (0.55 in.)
Position “d” : 14.5 mm (0.57 in.) for glass upper section
Position “d” : 16 mm (0.63 in.) for glass bottom section
Position “d” : 32 mm (1.26 in.) for glass side sections

BODY STRUCTURE

FRONT DOOR ASSEMBLY

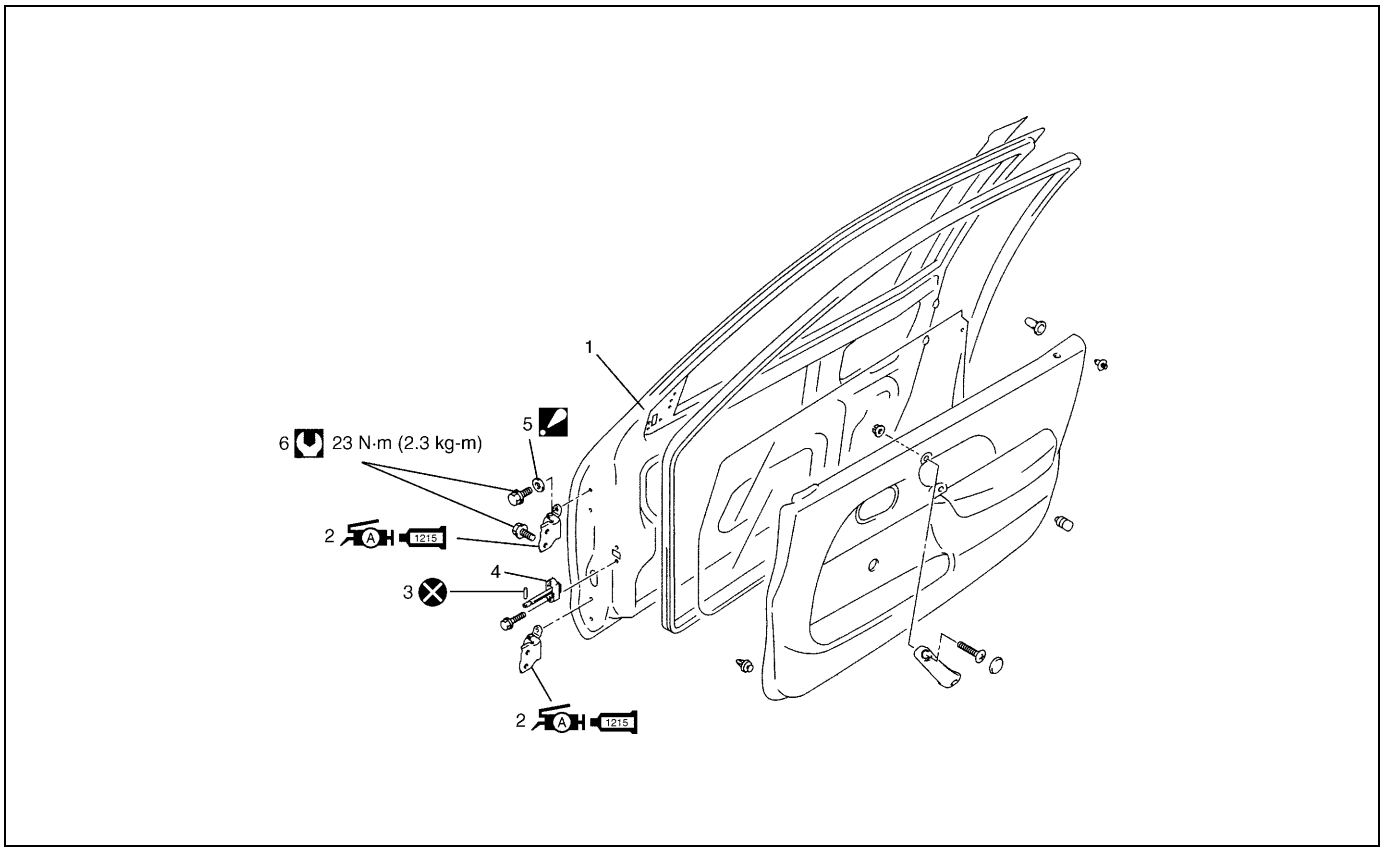

	1. Door panel		5. Door hinge washer : Not necessary to install
A 1215	2. Door hinge : Apply lithium grease 99000-25010 to rotating part : Apply sealant 99000-31110 to contact face		6. Front door hinge bolt
	3. Door stopper pin		Tightening torque
	4. Door open stopper		Do not reuse.

REMOVAL

1) Remove front fender.
2) Disconnect door harness lead wires at each coupler, if equipped.
3) Remove stopper pin (1) from door open stopper (2).

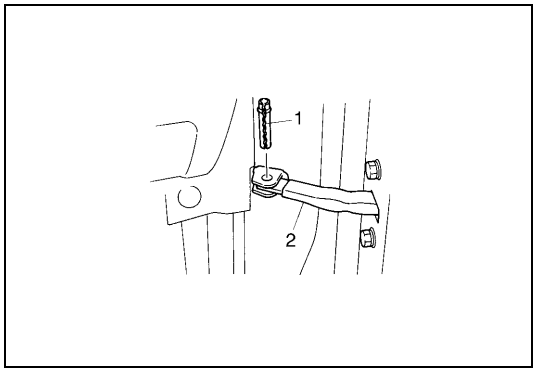

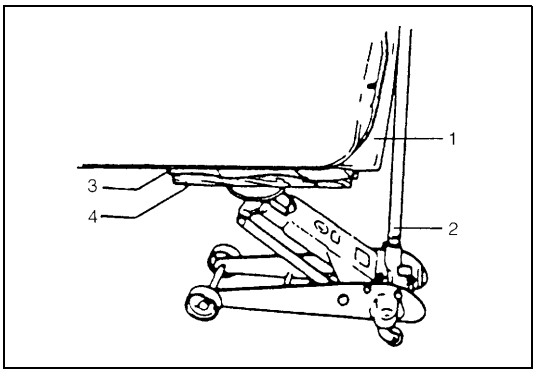

4) Support door panel (1) using a jack (2) with a piece of wood placed (4) between jack (2) and panel (1) as shown.

3. Rags

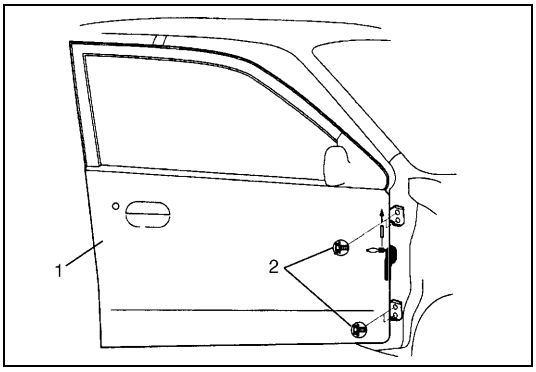

5) Remove door assembly (1) by loosening hinge mounting bolts (2).

INSTALLATION

Reverse removal procedure to install door assembly noting the following instructions.

- When replacing door, coat replacement door inside with wax for proper anti-corrosion treatment.
  Refer to “ANTI-CORROSION COMPOUND APPLICATION AREA” in this section.

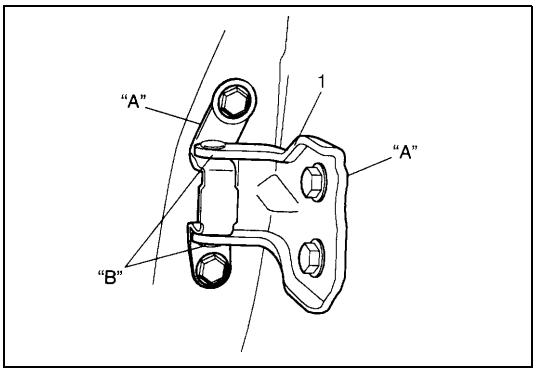

- Apply sealant to contact face “A” of hinge (1) and apply grease to rotating part “B” of hinge (1).

“A” : Sealant 99000-31110
“B” : Lithium grease 99000-25010

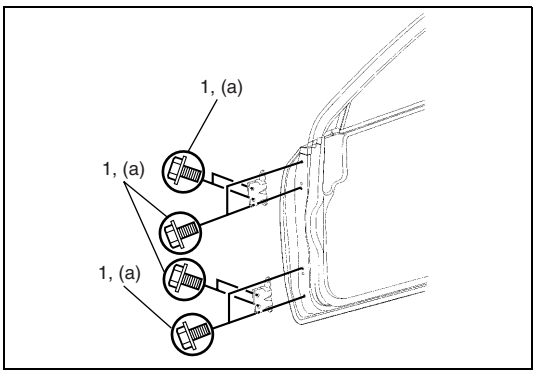

- Tighten hinge bolt (1) to specified torque.

Tightening torque
Door hinge mounting bolt
(a) : 23 N·m (2.3 kg-m, 17.0 lb-ft)

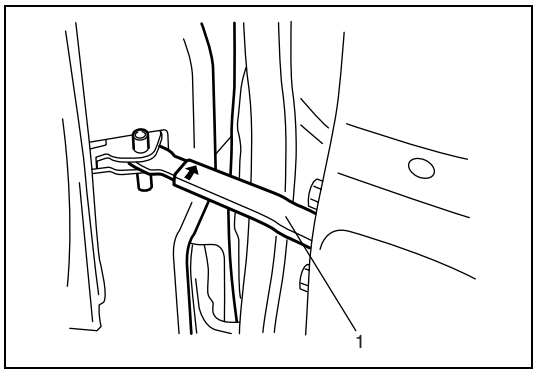

- When door open stopper (1) is installed, be careful to install direction as shown.

- Adjust door latch striker position referring to “FRONT DOOR LOCK ASSEMBLY” in this section.
- Adjust front door cushion so that door becomes flush with side body.
- After installation, open and close the door to check looseness.
  Replace door open stopper pin when there is looseness.
- When weather-strip is hardened, water leak may develop.
  In such case, replace it with new one.

REAR DOOR ASSEMBLY

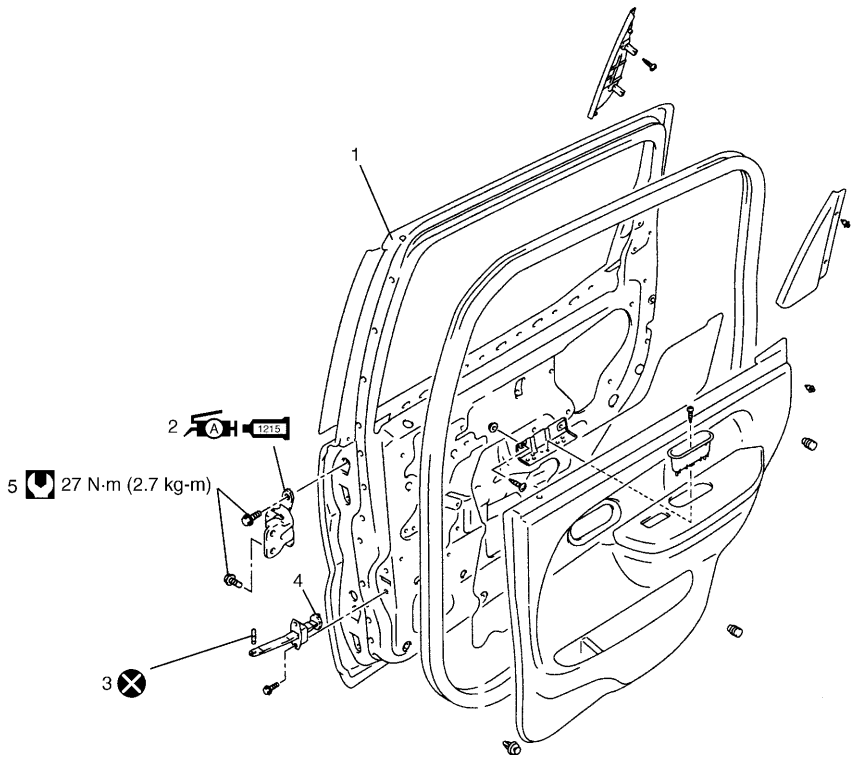

	1. Door panel	4. Door stopper	Do not reuse.
A 1215	2. Door hinge : Apply lithium grease 99000-25010 to rotating part : Apply sealant 99000-31110 to contact face	5. Rear door hinge bolt	
	3. Door stopper pin	Tightening torque	

REMOVAL AND INSTALLATION

Refer to “FRONT DOOR ASSEMBLY” in this section noting the following instructions.

- Refer to above figure for tightening torque, grease and sealant.
- When door open stopper is installed, be careful to face side.

Door stopper installing direction
Right side door : RR punch mark is upward.
Left side door : RL punch mark is upward.

BACK DOOR ASSEMBLY

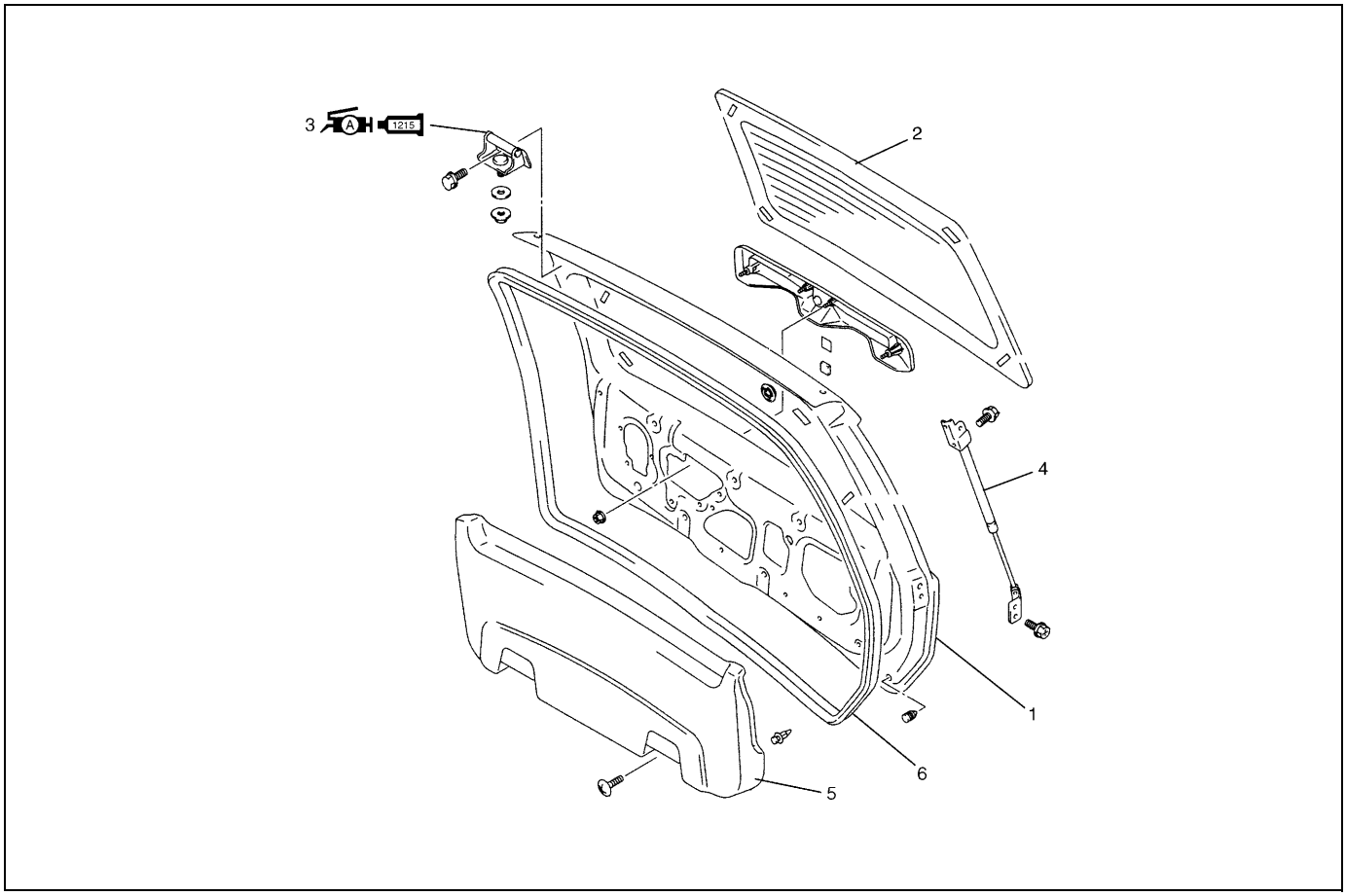

	1. Back door panel assembly	4. Back door balancer unit
	2. Back door window glass	5. Back door trim
A 1215	3. Back door hinge : Apply lithium grease 99000-25010 to door hinge moving section : Apply sealant 99000-31110 to contact face	6. Weather strip

REMOVAL

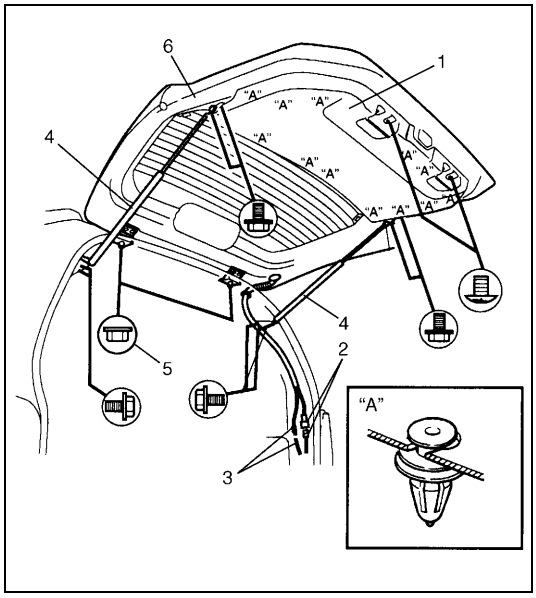

1) Remove back door trim (1).
2) Remove related section of head lining and quarter trim.
3) Disconnect back door harness connectors (2) and washer hose (3).
4) Remove wire harness connectors inside back door.
5) Remove back door balancer (4) (first at its door side and next at its body side).
6) Remove door hinge nuts (5) and remove back door assembly (6).

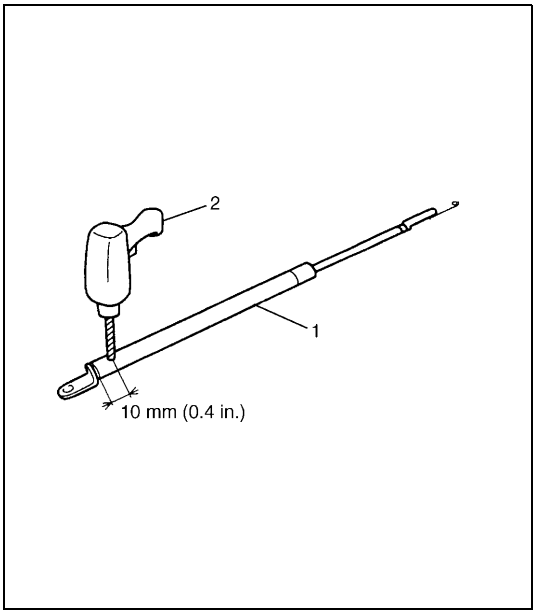

WARNING:

Handling of Back Door Balancer (Damper)

- **Do not disassemble balancer (1) because its cylinder is filled with gas.**
- **Handle balancer carefully. Do not scar or scratch exposed surface of its piston rod, and never allow any paint or oil to stick to its surface.**
- **Do not turn piston rod with balancer fully extended.**
- **When discarding removed back door balancer (damper), use a 2 – 3 mm (0.08 – 0.12 in.) drill (2) to make a hole as shown.**
- **The gas itself is harmless but it may issue out of the hole together with chips generated by the drill (2). Therefore, be sure to wear goggle.**

INSTALLATION

Reverse removal procedure to install back door noting the following instructions.

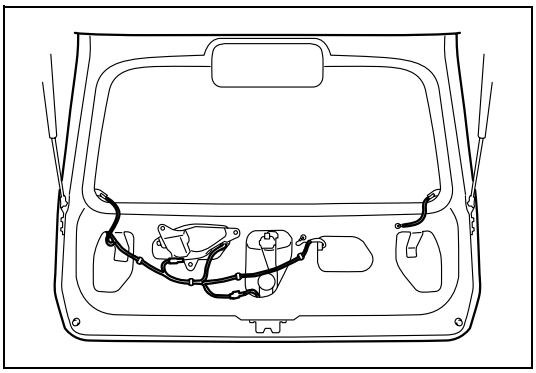

- Secure wiring harness.

- Adjust door latch striker position by referring “BACK DOOR LOCK ASSEMBLY” in this section.
- Adjust door cushion so that door contacts body when closed.
- Adjust door clearance by loosening door hinge mounting bolts and nuts referring to “PANEL CLEARANCE” in this section.

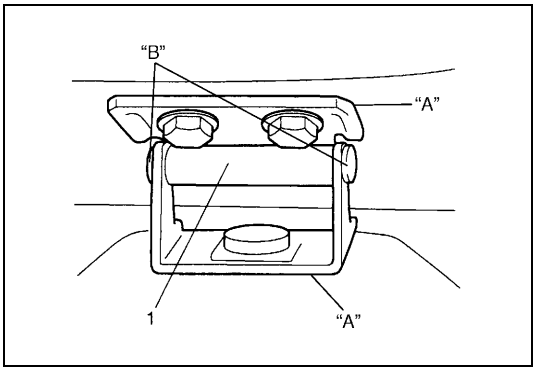

- Apply sealant to contact face “A” of door hinge (1) and apply grease to rotating part “B” of hinge (1).

“A” : Sealant 99000-31110
“B” : Lithium grease 99000-25010

HOOD

REMOVAL

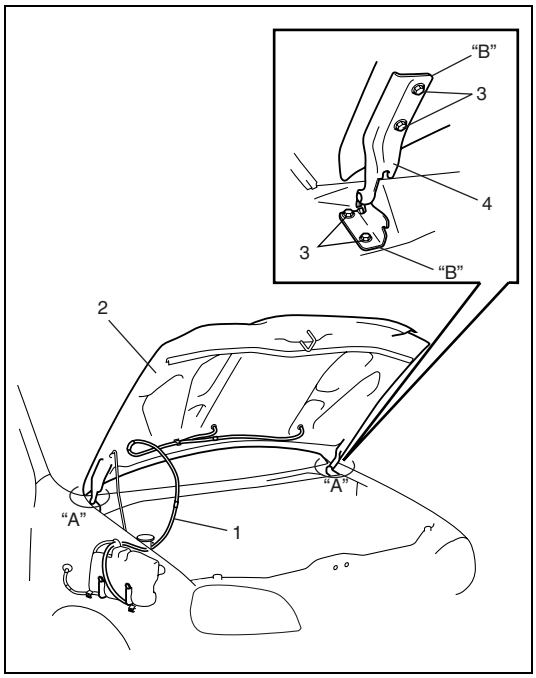

CAUTION:
Place cloth on "A" in figure to prevent from any damage.

1) Remove window washer hose (1) from hood (2).
2) Remove 4 mounting bolts (3) to detach hood (2).

INSTALLATION

Reverse removal procedure to install hood noting the following instruction.

- Apply sealant to contact face "B" of hood hinge (4).

"B" : Sealant 99000-3110

ADJUSTMENT

Adjust the following point :

- Hood position adjustment.
  Fore-and-aft and right-and-left adjustment.
  Adjust hood clearance by loosening hood mounting bolts, refer to "PANEL CLEARANCE" in this section.

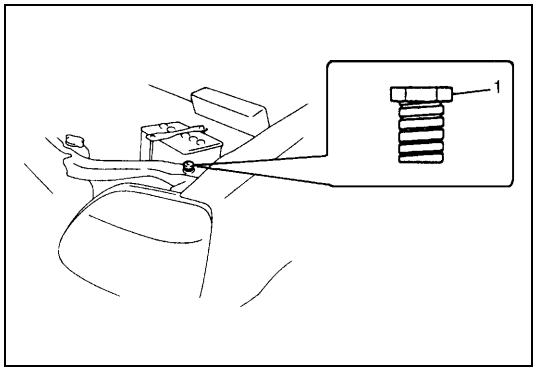

- Vertical adjustment
  If only one side (right or left) of hood is not level with front fender, make it level by tightening or loosening hood cushion (1).

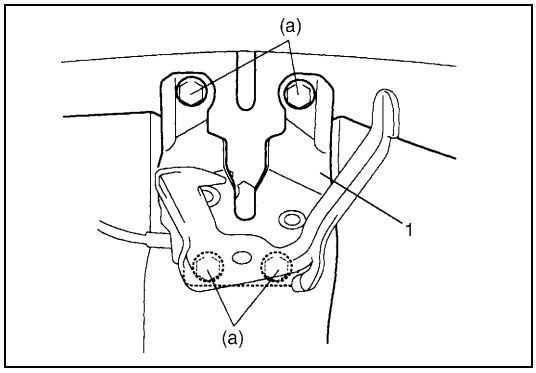

- Hood lock position adjustment
  When installing hood lock (1), bring bolt at highest position and move it in vertical direction for adjustment free from loose to hood striker.

Tightening torque
Hood latch bolts (a) : 10 N·m (1.0 kg-m, 7.0 lb-ft)

INSPECTION

Check that hood opens and closes smoothly and properly. Lubricate if necessary. Also check that secondary latch operates properly (check that secondary latch keeps hood from opening all the way) and hood locks securely when closed.
Adjust hood locks position if necessary.

FRONT FENDER

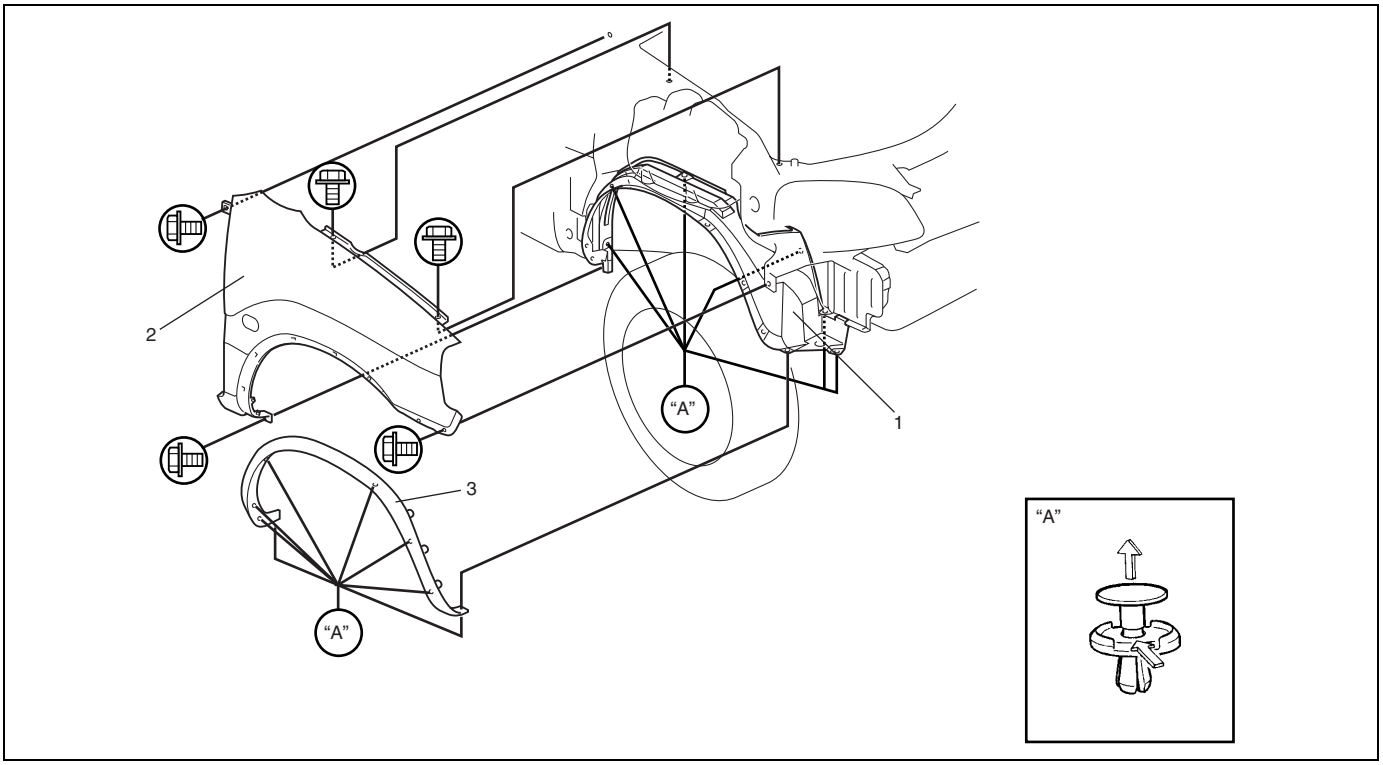

1. Front fender lining	2. Front fender	3. Front fender side moulding

REMOVAL

1) Remove front fender side moulding.
2) Remove front bumper.
3) Disconnect connector of side turn signal (or side marker) lamp.
4) Remove front fender lining.
5) Remove front fender.

INSTALLATION

Reverse removal procedure to install front fender noting the following instructions.

- If paint on fender bolt is peeled off, be sure to apply paint again.
- Adjust panel clearance referring to "PANEL CLEARANCE" in this section.

FRONT BUMPER AND REAR BUMPER

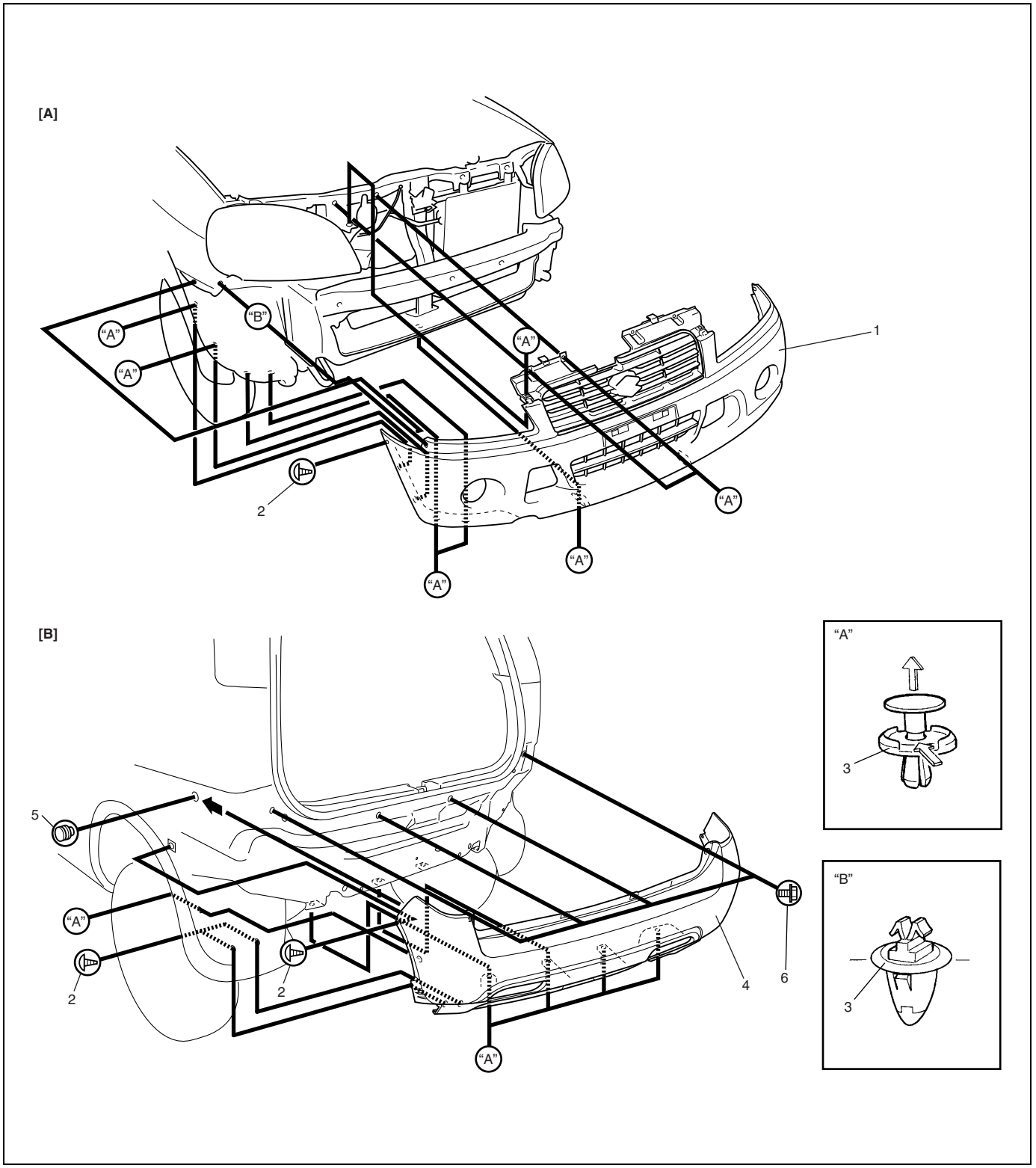

[A] : Front bumper	1. Front bumper	4. Rear bumper
[B] : Rear bumper	2. Screws	5. Damper
	3. Clip	6. Bolt

ROOF RAIL (IF EQUIPPED)

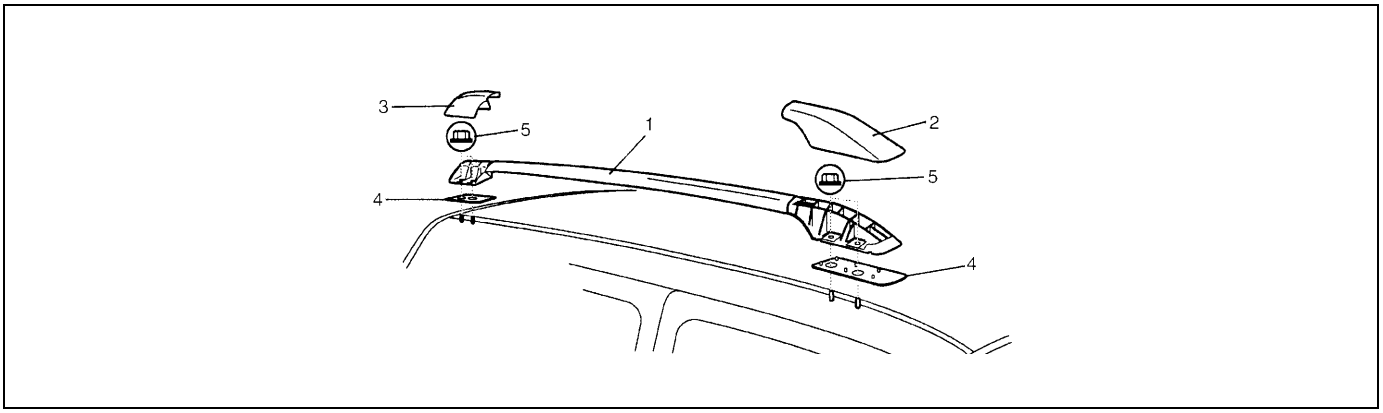

1.	Roof rail assembly
2.	Front cap
3.	Rear cap
4.	Base seal
5.	Nut

REMOVAL

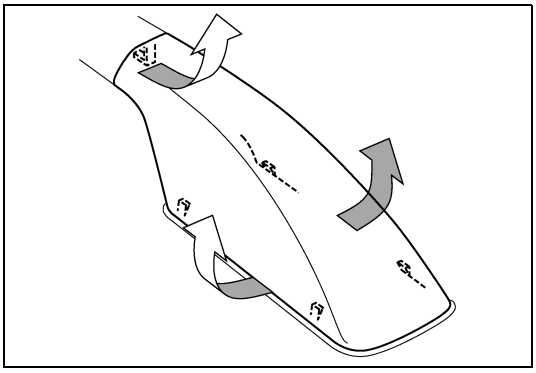

1) Remove roof rail front and rear caps as shown in figure.
2) Remove nuts.
3) Remove roof rail assembly.

INSTALLATION

Reverse removal procedure for installation.
Confirm that each roof rail fixing nut is tightened securely.

BODY DIMENSIONS

ENGINE ROOM

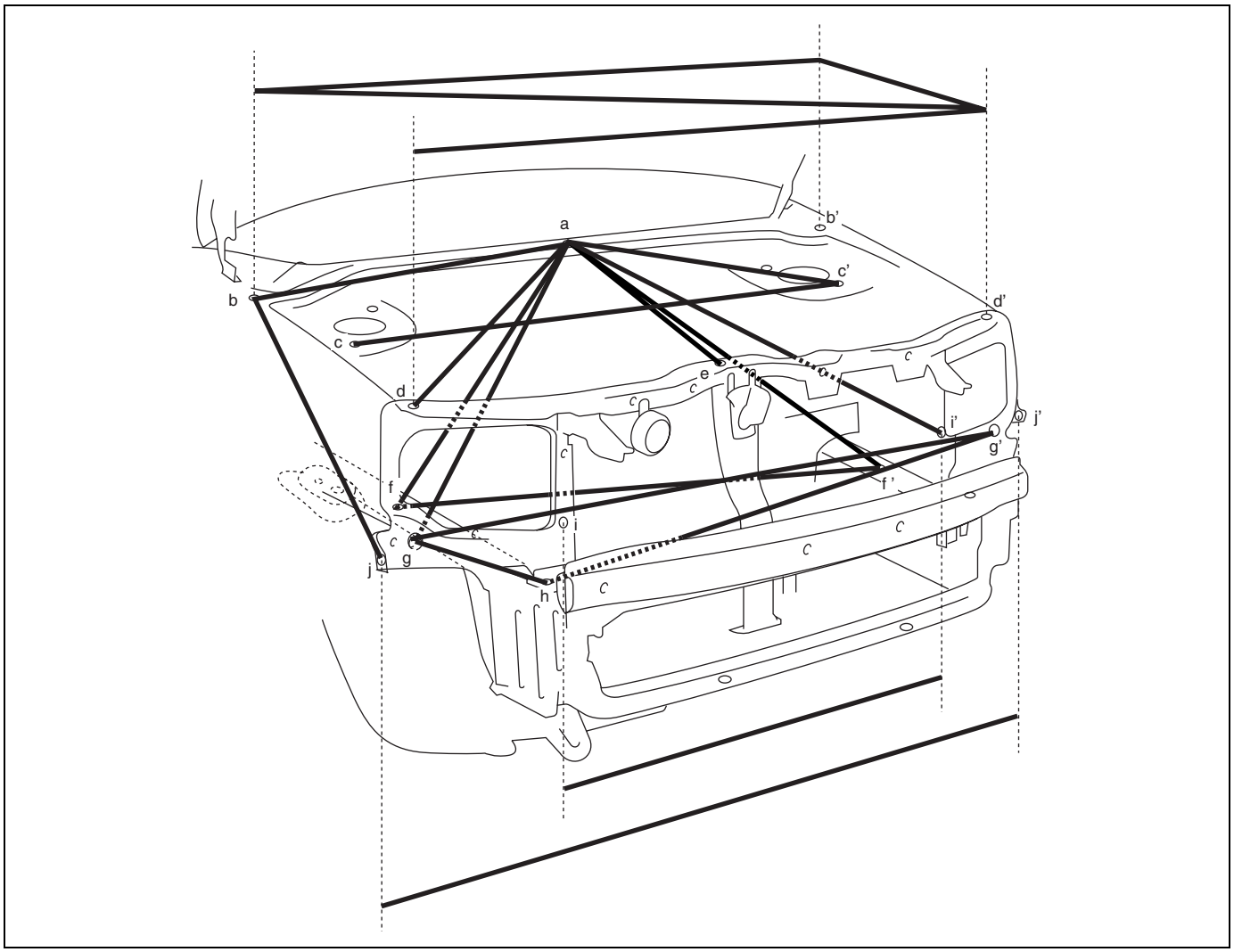

a. Garnish installation center hole (ϕ5)	e. Hood cushion installation hole	i (i'). Head light installation hole
b (b'). Front fender installation hole	f (f'). Engine mounting installation front hole	j (j'). Front fender installation hole
c (c'). Strut installation front hole	g (g'). Jig hole (ϕ15 mm)	
d (d'). Front fender installation hole	h. Bumper member upper side installation hole	

Hole to hole distance

a-b : 673 mm (26.50 in.)	**a-i' : 760 mm (29.92 in.)**	**f-f' : 954 mm (37.56 in.)**
a-c' : 584 mm (22.99 in.)	**b-b' : 1340 mm (52.76 in.)**	**g-g' : 1315 mm (51.77 in.)**
a-d : 793 mm (31.22 in.)	**b-d' : 1410 mm (55.51 in.)**	**g-h : 231 mm (9.09 in.)**
a-e : 584 mm (22.99 in.)	**b-j : 638 mm (25.12 in.)**	**g'-h : 1139 mm (44.84 in.)**
a-f : 774 mm (30.47 in.)	**b'-d' : 470 mm (18.50 in.)**	**i-i' : 866 mm (34.09 in.)**
a-f' : 836 mm (32.91 in.)	**c-c' : 1098 mm (43.23 in.)**	**j-j' : 1496 mm (58.90 in.)**
a-g : 889 mm (35.00 in.)	**d-d' : 1320 mm (51.97 in.)**	

BACK DOOR

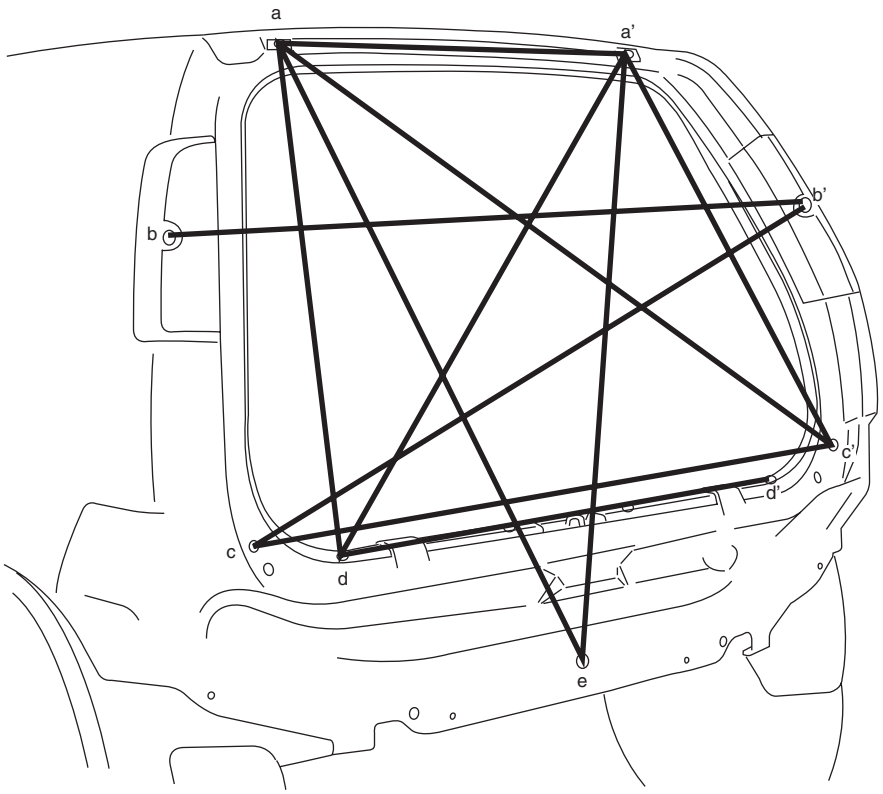

a (a'). Back door hinge installation hole	d (d'). Tail end member trim installation hole
b (b'). Rear combination lamp installation hole	e. Center jig hole (ϕ7 mm)
c (c'). Rear bumper installation hole	

Hole to hole distance

a-a' : 725 mm (28.54 in.)	**a'-c' : 794 mm (31.26 in.)**	**b'-c: 1333mm (52.48 in.)**
a-c' : 1229 mm (48.39 in.)	**a'-d : 1128 mm (44.41 in.)**	**c-c' : 1215 mm (47.83 in.)**
a-d : 799 mm (31.46 in.)	**a'-e : 1096 mm (43.15 in.)**	**d-d' : 875 mm (34.45 in.)**
a-e : 1096 mm (43.15 in.)	**b-b' : 1305 mm (51.38 in.)**	

SIDE BODY

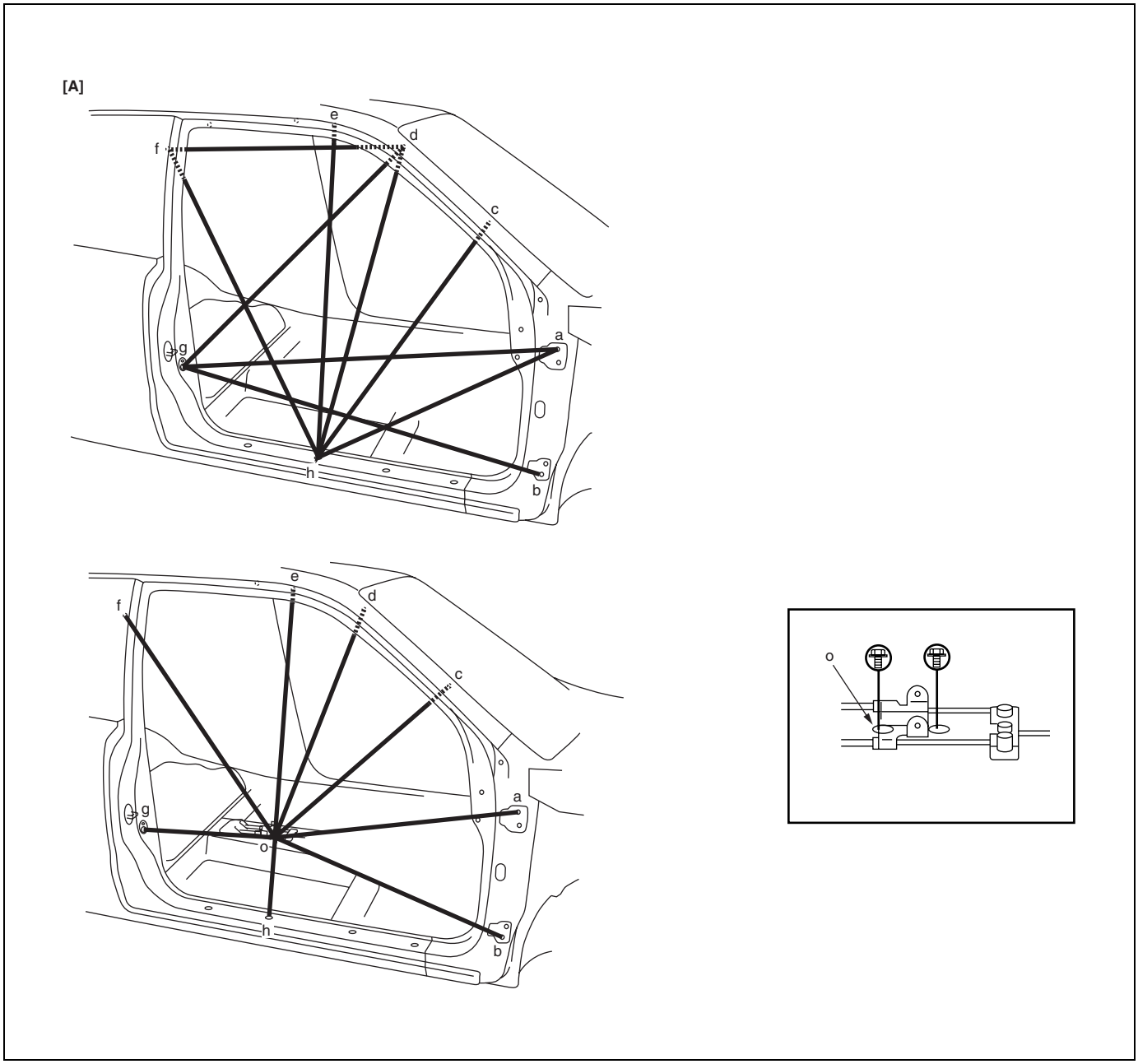

[A] : 3 door model	f. Front shoulder adjuster installation upper hole
a. Door upper hinge installation hole	g. Door switch installation hole
b. Door lower hinge installation hole	h. Side sill scuff installation hole
c. Front pillar inner trim installation lower hole	i. Parking brake cable bracket installation rear hole
d. Front pillar inner trim installation upper hole	
e. Assistant grip installation front hole	

Hole to hole distance

a-g : 1168 mm (45.98 in.)	**d-h : 1015 mm (39.96 in.)**	**d-o : 1252 mm (49.29 in.)**
a-h : 852 mm (33.54 in.)	**e-h : 1087 mm (42.80 in.)**	**e-o : 1244 mm (48.98 in.)**
b-g : 1188 mm (46.77 in.)	**f-h : 1091 mm (42.95 in.)**	**f-o : 1173 mm (46.18 in.)**
c-h : 924 mm (36.38 in.)	**a-o : 1317 mm (51.85 in.)**	**g-o : 799 mm (31.46 in.)**
d-f : 720 mm (28.35 in.)	**b-o : 1222 mm (48.11 in.)**	**h-o : 816 mm (32.13 in.)**
d-g : 933 mm (36.73 in.)	**c-o : 1283 mm (50.51 in.)**	

[B]

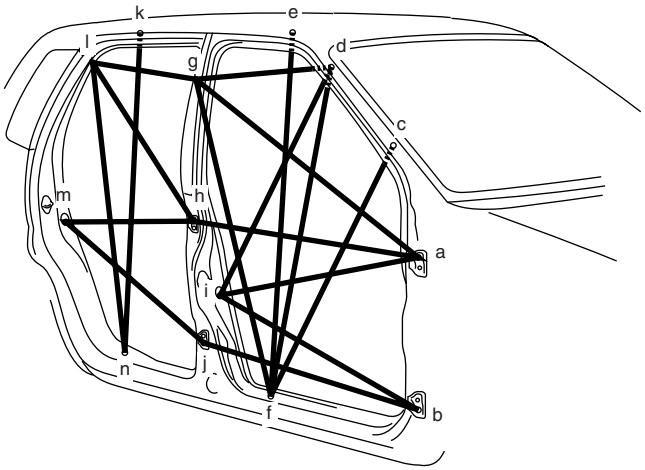

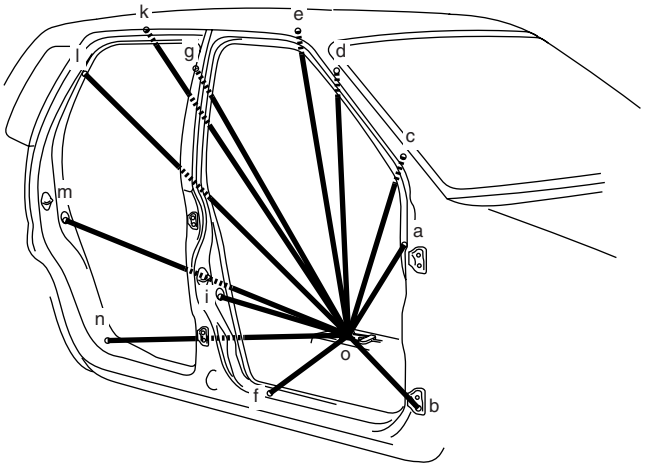

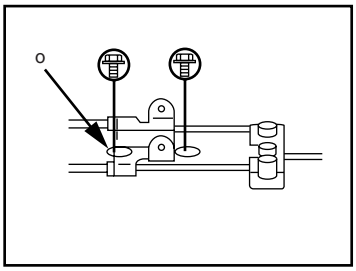

[B] : 5 door model	f. Side sill scuff installation rear hole	l. Rear door rear notch
a. Front door upper hinge installation hole	g. Front shoulder adjuster installation upper hole	m. Rear door switch installation hole
b. Front door lower hinge installation hole	h. Rear door upper hinge installation hole	n. Side soil scuff installation rear hole
c. Front pillar inner trim installation lower hole	i. Front door switch installation hole	o. Parking brake cable bracket installation rear hole
d. Front pillar inner trim installation upper hole	j. Rear door lower hinge installation hole	p. Steering support member installation hole
e. Assistant grip installation front hole	k. Assistant grip installation hole	

Hole to hole distance

a-g : 1166 mm (45.90 in.)	**d-i : 820 mm (32.28 in.)**	**i-o : 742 mm (29.21 in.)**
a-h : 942 mm (37.09 in.)	**d-o : 1252 mm (49.29 in.)**	**j-m : 895 mm (35.24 in.)**
a-i : 901 mm (35.47 in.)	**e- f : 1077 mm (42.40 in.)**	**k-n : 1089 mm (42.87 in.)**
b-i : 891 mm (35.08 in.)	**e-o : 1244 mm (48.98 in.)**	**k-o : 1321 mm (52.01 in.)**
b-j : 902 mm (35.51 in.)	**f-g: 1048 mm (41.26 in.)**	**l-n : 948 mm (37.32 in.)**
b-o : 1222 mm (48.11 in.)	**f-o 785 mm (30.91 in.)**	**l-o : 1323 mm (52.09 in.)**
c-f : 884 mm (34.80 in.)	**g-l : 621 mm (24.45 in.)**	**m-o : 1111 mm (43.74 in.)**
c-o: 1282 mm (50.47 in.)	**g-o : 1147 mm (45.16 in.)**	**n-o : 813 mm (32.00 in.)**
d-f : 993 mm (39.09 in.)	**h-l : 846 mm (33.31 in.)**	**o-p : 1229 mm (48.39 in.)**
d-g : 580 mm (22.83 in.)	**h-m : 813 mm (32.01 in.)**	

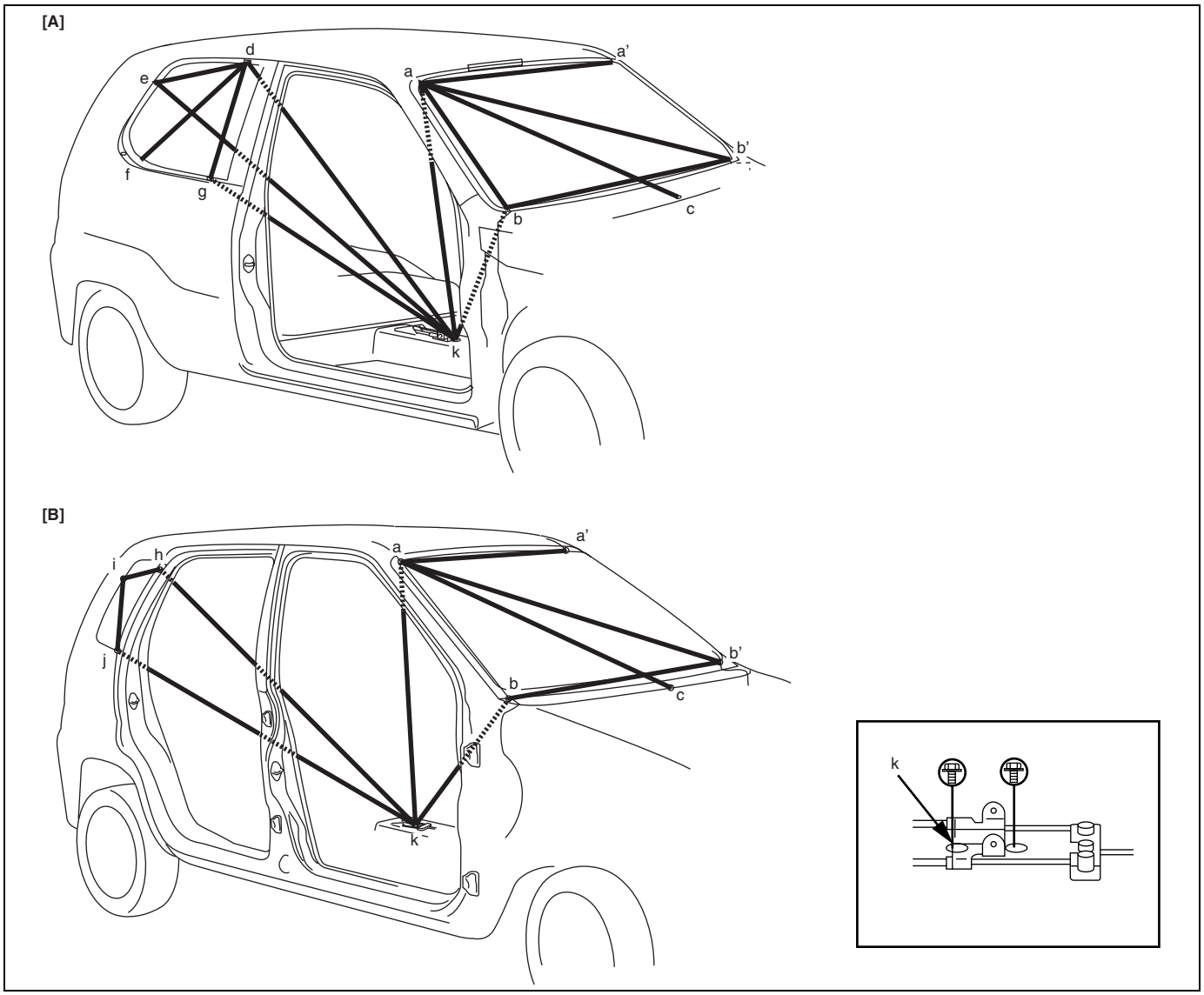

[A] : 3 door model	f. Quarter window lower side rear mounting hole (5.1 x 8.6 mm)
[B] : 5 door model	g. Quarter window lower side front mounting hole (5.1 x 8.6 mm)
a (a'). Front end of front windshield upper installation section	h. Quarter window upper notch
b (b). Front end of front windshield lower installation section	i. Quarter window rear notch
c. Garnish installation center hole (ϕ5 mm)	j. Quarter window lower mounting hole (5.1 x 8.6 mm)
d. Quarter window upper side front notch	k. Parking brake cable bracket installation rear hole
e. Quarter window rear notch	

Hole to hole distance

a-a' : 1047 mm (41.22 in.)	**b-k : 1411 mm (55.55 in.)**	**f-k : 1373 mm (54.06 in.)**
a-b : 688 mm (27.01 in.)	**d-e : 577 mm (22.72 in.)**	**g-k : 1092 mm (42.99 in.)**
a-b' : 1356 mm (53.39 in.)	**d-f : 623 mm (24.53 in.)**	**h-i : 237 mm (9.33 in.)**
a-c : 1032 mm (40.63 in.)	**d-g : 363 mm (14.29 in.)**	**h-k : 1430 mm (56.30 in.)**
a-k : 1282 mm (50.47 in.)	**d-k : 1271 mm (50.04 in.)**	**i-j : 242 mm (9.53 in.)**
b-b' : 1305 mm (51.38 in.)	**e-k : 1474 mm (58.03 in.)**	**j-k : 1413 mm (55.63 in.)**

UNDER BODY

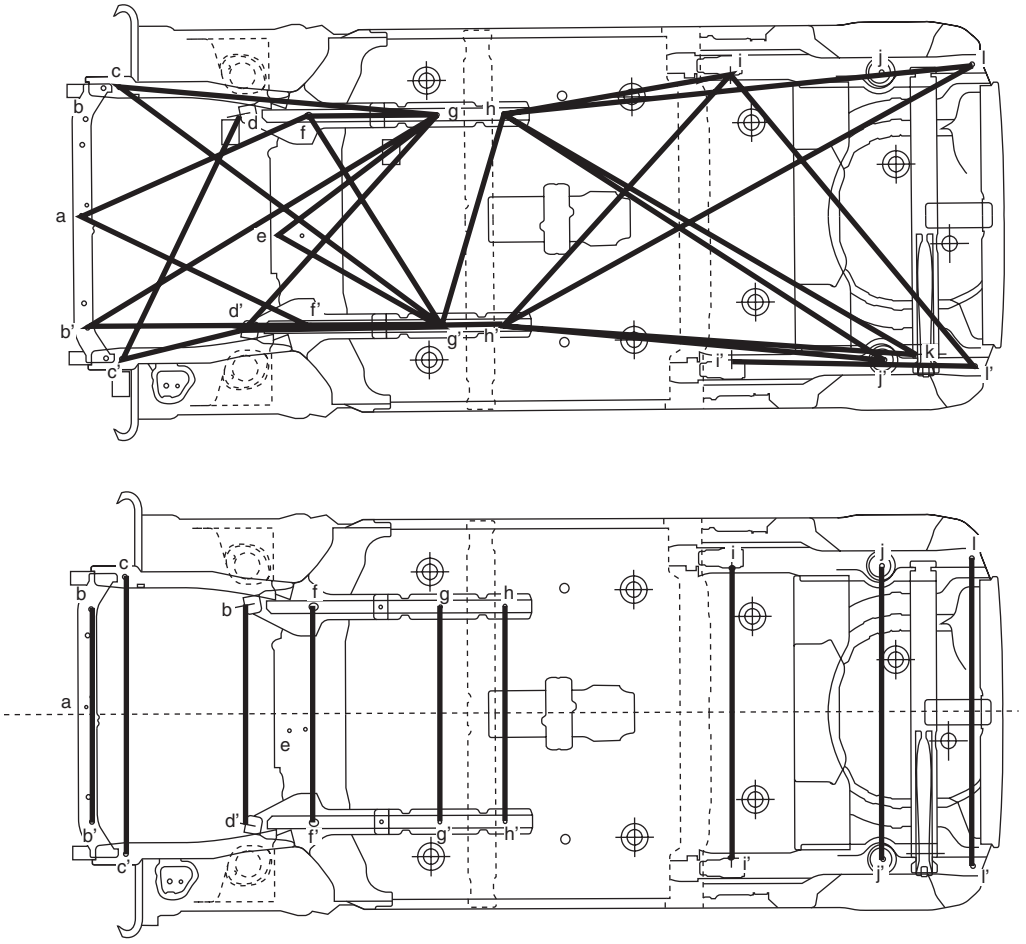

a. Jack bracket installation hole	g (g'). Jig hole (ϕ10 mm)
b (b'). Front stabilizer bracket front installation hole	h (h'). Jig hole (ϕ10 mm)
c (c'). Front stabilizer bracket rear installation hole	i (i'). Trailing arm installation hole
d (d'). Suspension control arm installation front hole	j (j'). Bump stopper installation hole
e. Rear engine mounting front installation hole	k. Lateral rod installation hole
f (f'). Jig hole (ϕ15 mm)	l (l'). Jig hole (ϕ16 mm)

Hole to hole distance

a-f : 909 mm (35.79 in.)	**d'-g' : 708 mm (27.87 in.)**	**h-k : 1724 mm (67.87 in.)**
a-f' : 862 mm (33.94 in.)	**e-g : 702 mm (27.64 in.)**	**h-l : 1718 mm (67.64 in.)**
b-b' : 740 mm (29.13 in.)	**e-g' : 647 mm (25.47 in.)**	**h'-i : 1204 mm (47.40 in.)**
b'-g : 1464 mm (57.64 in.)	**f-f' : 754 mm (29.68 in.)**	**h'-j' : 1384 mm (54.45 in.)**
b'-g' : 1259 mm (49.57 in.)	**f-g : 471 mm (18.54 in.)**	**h'-k : 1497 mm (58.94 in.)**
c-c' : 968 mm (38.11 in.)	**f-g' : 889 mm (35.00 in.)**	**h'-l : 1940 mm (76.38 in.)**
c-g : 1148 mm (45.20 in.)	**g-g' : 754 mm (29.68 in.)**	**i-i' : 1017 mm (40.04 in.)**
c-g' : 1431 mm (56.34 in.)	**g'-h : 791 mm (31.14 in.)**	**i-l' : 1392 mm (54.80 in.)**
c'-d : 970 mm (38.19 in.)	**g'-h' : 240 mm (9.45 in.)**	**i'-l' : 918 mm (36.14 in.)**
c'-d' : 452 mm (17.80 in.)	**h-h' : 754 mm (29.68 in.)**	**j-j' : 1028 mm (40.47 in.)**
d-d' : 761 mm (29.96 in.)	**h-i : 826 mm (32.52 in.)**	**l-l' : 1076 mm (42.36 in.)**
d'-g : 1037 mm (40.83 in.)	**h-j' : 1640 mm (64.57 in.)**	

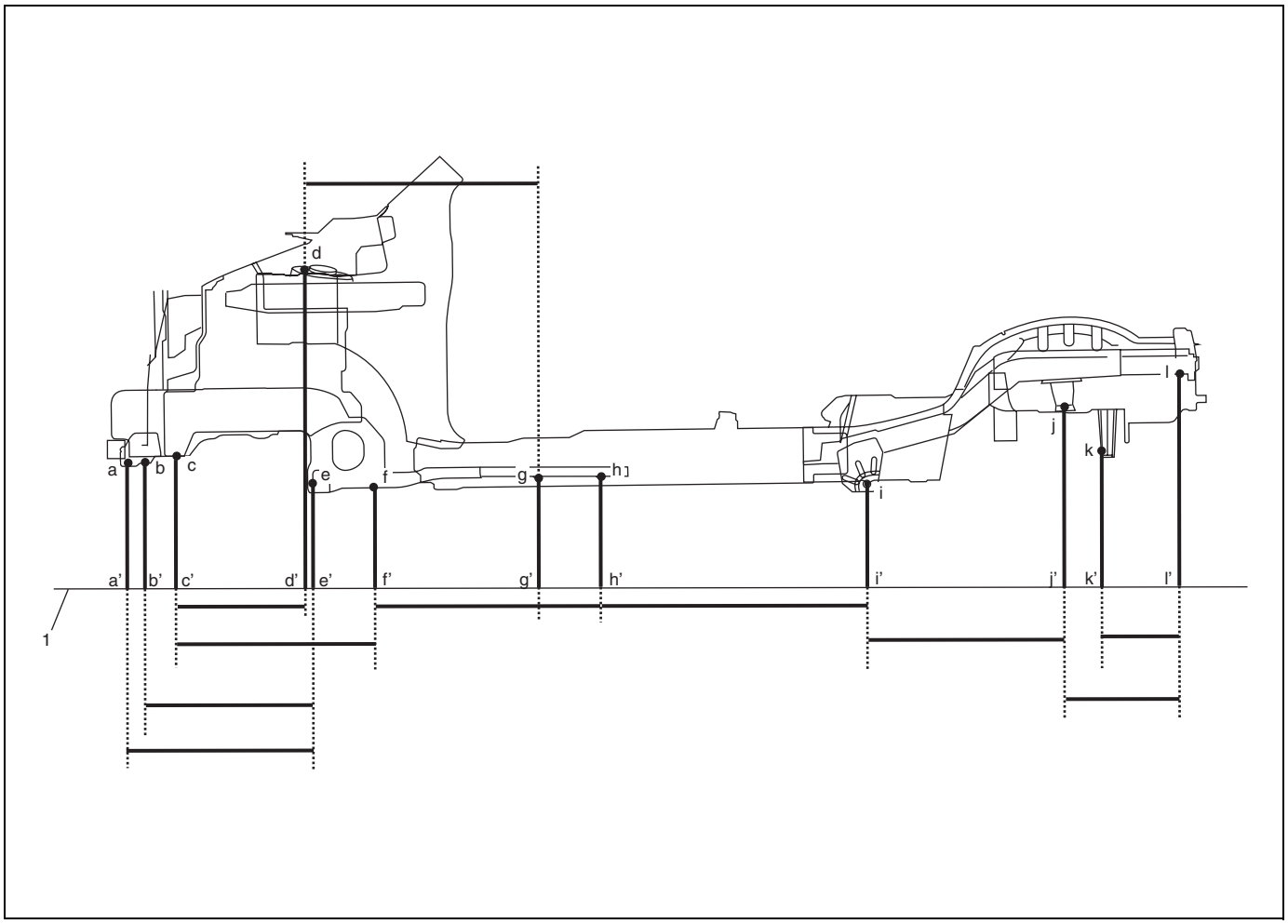

1. Virtual baseline	g. Jig hole (ϕ10 mm)
a. Jack bracket installation hole	h. Jig hole (ϕ10 mm)
b. Front stabilizer bracket front installation hole	i. Trailing arm installation hole
c. Front stabilizer bracket rear installation hole	j. Bump stopper installation hole
d. Strut installation front hole	k. Lateral rod installation hole
e. Suspension control arm installation front hole	l. Jig hole (ϕ16 mm)
f. Jig hole (ϕ15 mm)	

Point to point distance

a-a' : 133 mm (5.24 in.)	**e-e' : 77 mm (3.03 in.)**	**i-i' : 85 mm (3.35 in.)**
a-e' : 558 mm (21.97 in.)	**e'-f' : 238 mm (9.37 in.)**	**i'-j' : 546 mm (21.50 in.)**
b-b' : 133 mm (5.24 in.)	**f-f' : 55 mm (2.17 in.)**	**j-j' : 292 mm (11.50 in.)**
b'-e' : 550 mm (21.65 in.)	**f'-g' : 470 mm (18.50 in.)**	**j'-l' : 324 mm (12.76 in.)**
c-c' : 162 mm (6.38 in.)	**g-g' : 80 mm (3.15 in.)**	**k-k' : 139 mm (5.47 in.)**
c'-d' : 391 mm (15.39 in.)	**g'-h' : 240 mm (9.45 in.)**	**k'-l' : 193 mm (7.60 in.)**
c'-e' : 432 mm (17.01 in.)	**h-h' : 80 mm (3.15 in.)**	**l-l' 375 mm (14.76 in.)**
d-d' : 648 mm (25.51 in.)	**h'-i' 815 mm (32.09 in.)**	
d'-g' : 749 mm (29.49 in.)		

PANEL CLEARANCE

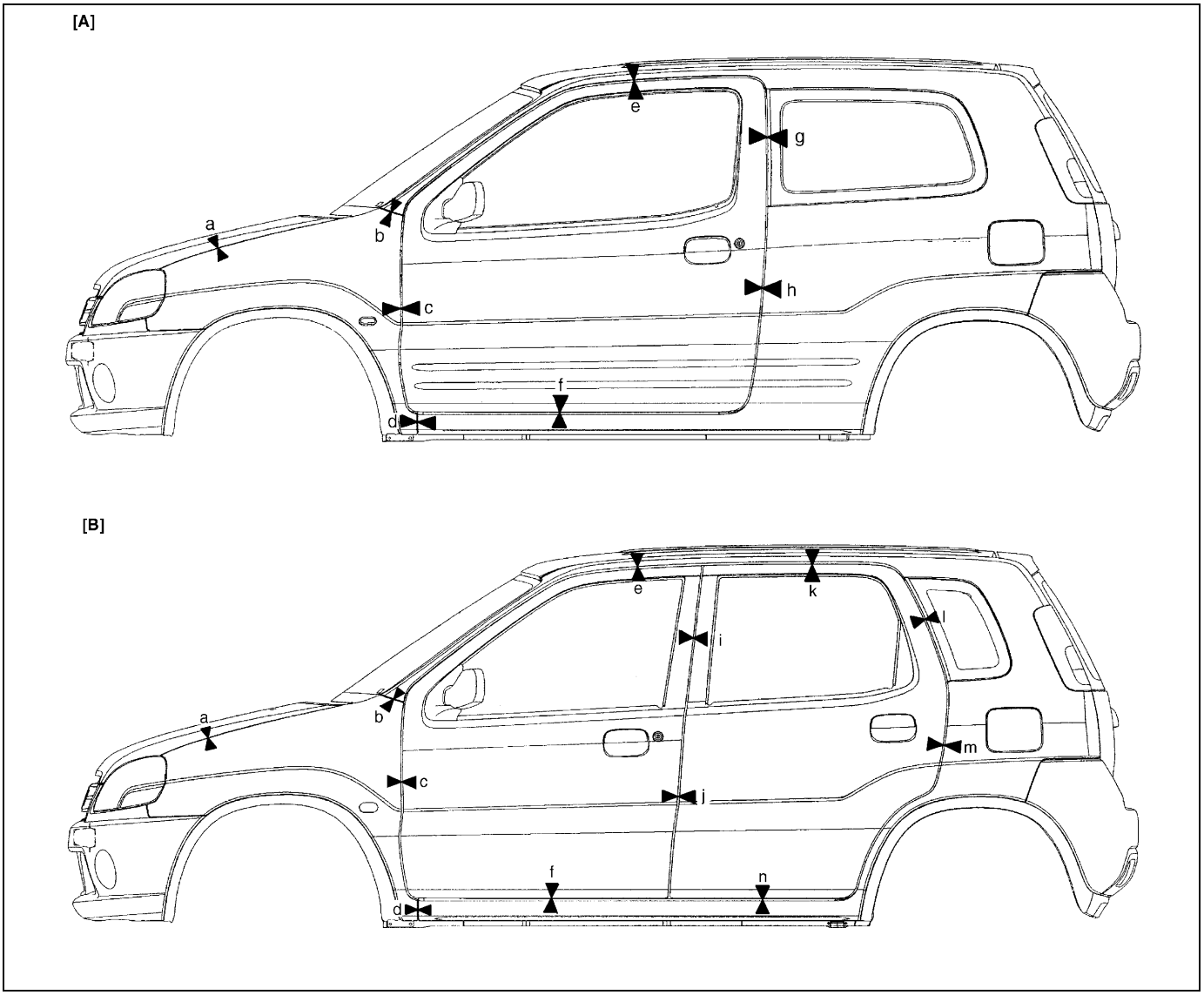

[A] : 3 door model	[B] : 5 door model

Panel to panel distance

a : 2.4-4.4 mm (0.094-0.173 in.)	**h : 3.6-5.6 mm (0.142-0.220 in.)**
b : 1.7-3.7 mm (0.067-0.146 in.)	**i : 3.6-5.6 mm (0.142-0.220 in.)**
c : 4.2-6.2 mm (0.165-0.244 in.)	**j : 4.2-6.2 mm (0.165-0.244 in.)**
d : 1.7-3.7 mm (0.067-0.146 in.)	**k : 5.0-7.0 mm (0.197-0.276 in.)**
e : 5.0-7.0 mm (0.197-0.276 in.)	**l : 4.3-6.3 mm (0.169-0.248 in.)**
f : 4.7-6.7 mm (0.185-0.264 in.)	**m : 3.6-5.6 mm (0.142-0.220 in.)**
g : 4.3-6.3 mm (0.169-0.248 in.)	**n : 4.7-6.7 mm (0.185-0.264 in.)**

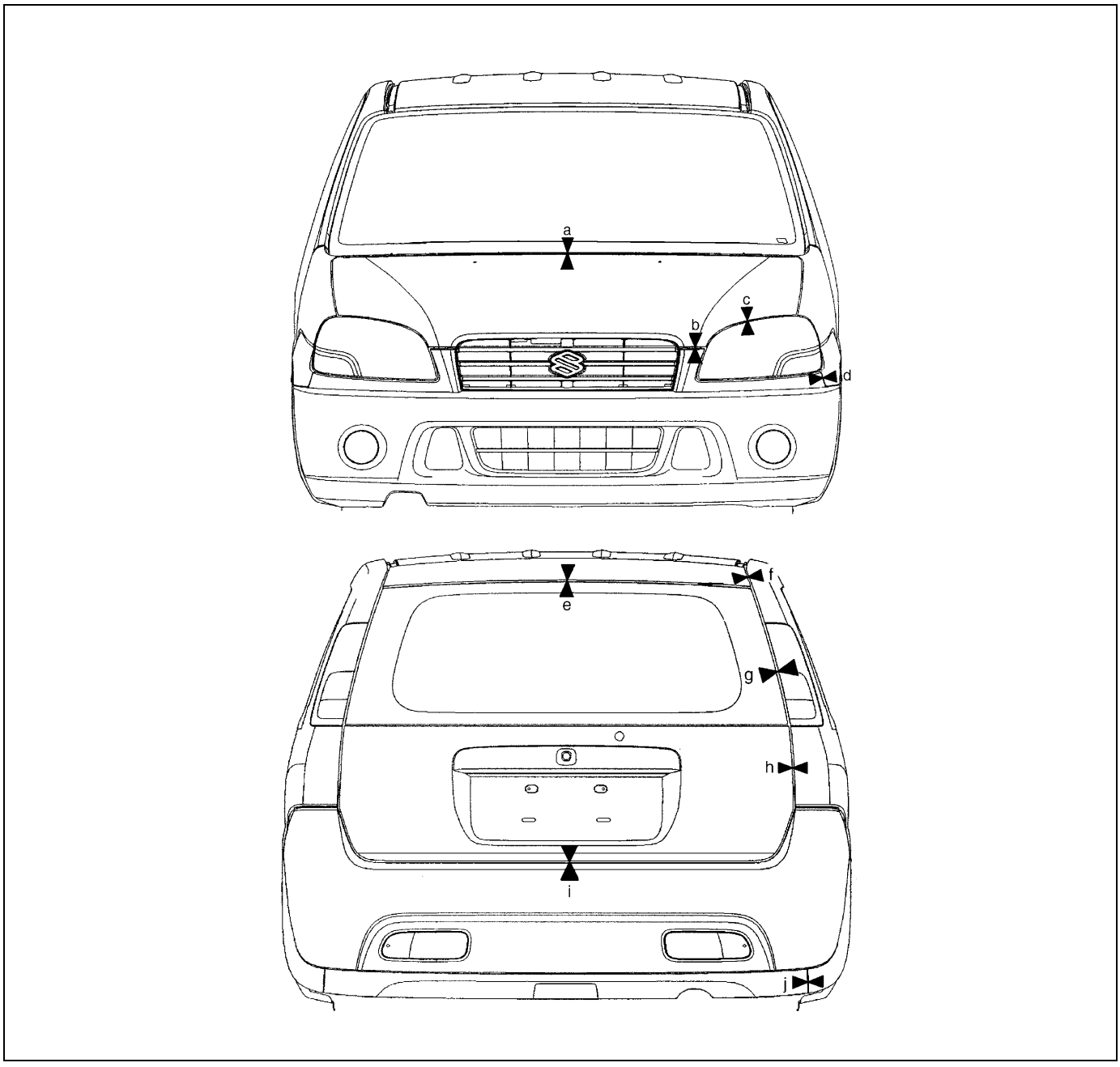

Panel to panel distance

a : 4.8-6.8 mm (0.189-0.268 in.)	**f : 3.5-5.5 mm (0.138-0.217 in.)**
b : 6.6-8.6 mm (0.260-0.339 in.)	**g : 4.3-6.3 mm (0.169-0.248 in.)**
c : 3.7-5.7 mm (0.146-0.244 in.)	**h : 3.5-5.5 mm (0.138-0.217 in.)**
d : 1.5-2.5 mm (0.059-0.098 in.)	**i : 5.3-7.3 mm (0.209-0.287 in.)**
e : 7.1-8.6 mm (0.280-0.339 in.)	**j : 1.0-3.0 mm (0.039-0.118 in.)**

INSTRUMENTATION AND DRIVER INFORMATION

INSTRUMENT PANEL

WARNING:
See WARNING at the beginning of this section.

REMOVAL

1) Disconnect negative cable at battery.
2) Disable air bag system, if equipped. Refer to “DISABLE AIR BAG SYSTEM” in Section 10B.

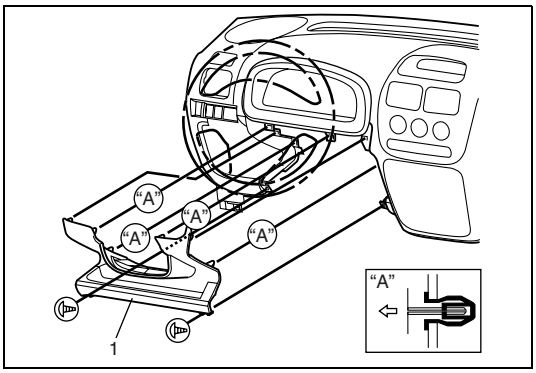

3) Remove steering column hole cover (1).

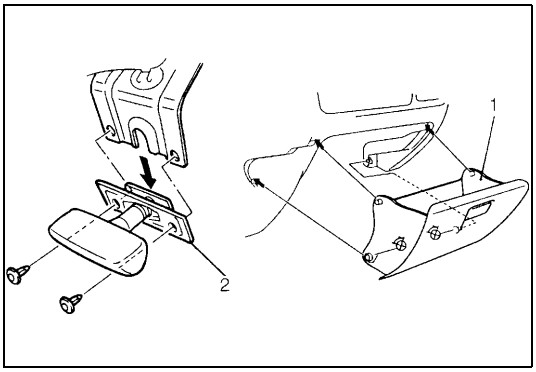

4) Remove glove box (1) and food latch release lever (2).

5) Disconnect instrument panel harness connectors, antenna and heater control cables which need to be disconnected for removal for instrument panel.
6) Remove instrument panel ground wire.
7) Remove steering column assembly referring to “STEERING COLUMN ASSEMBLY” in Section 3C.

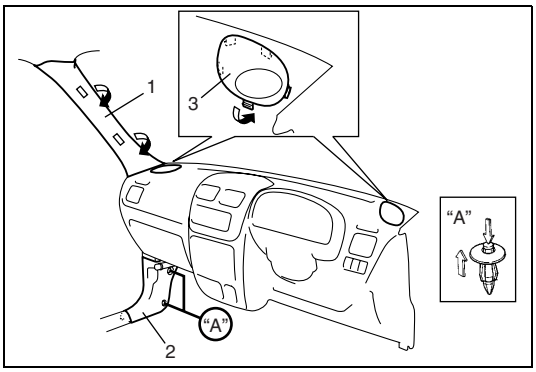

8) Remove front pillar trims (1) and dash side trims (2).
9) Remove speaker covers (3).

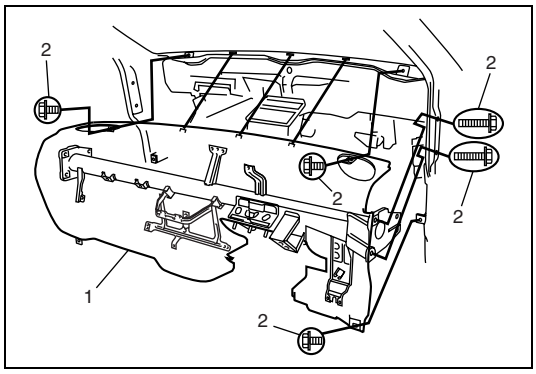

10) Remove instrument panel mounting bolts (2).
11) Remove instrument panel (1) with steering support member and instrument panel harness.

INSTALLATION

Reverse removal procedure to install instrument panel noting the following instructions.

- When installing each part, be careful not to catch any cable or wiring harness.

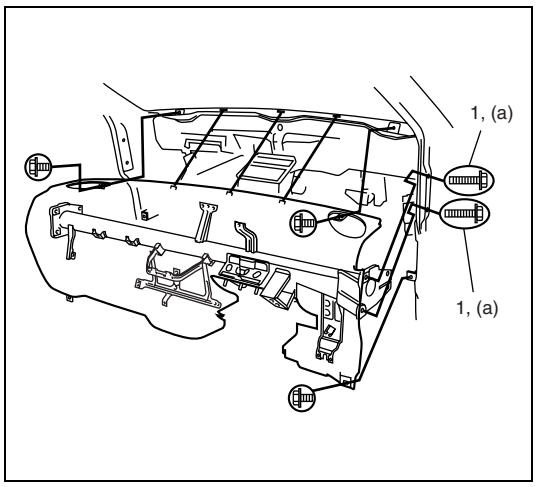

- Tighten instrument panel mounting bolts (1) to specified torque

Tightening torque
Instrument panel mounting bolts (a) :
23 N·m (2.3 kg-m, 17.0 lb-ft)

- When installing steering column assembly, refer to “STEERING COLUMN ASSEMBLY” in Section 3C.
- Adjust control cables. Refer to “HEATER CONTROL ASSEMBLY” in Section 1A.
- Enable air bag system if equipped. Refer to “ENABLING AIR BAG SYSTEM” in Section 10B.

SEATS

FRONT SEAT

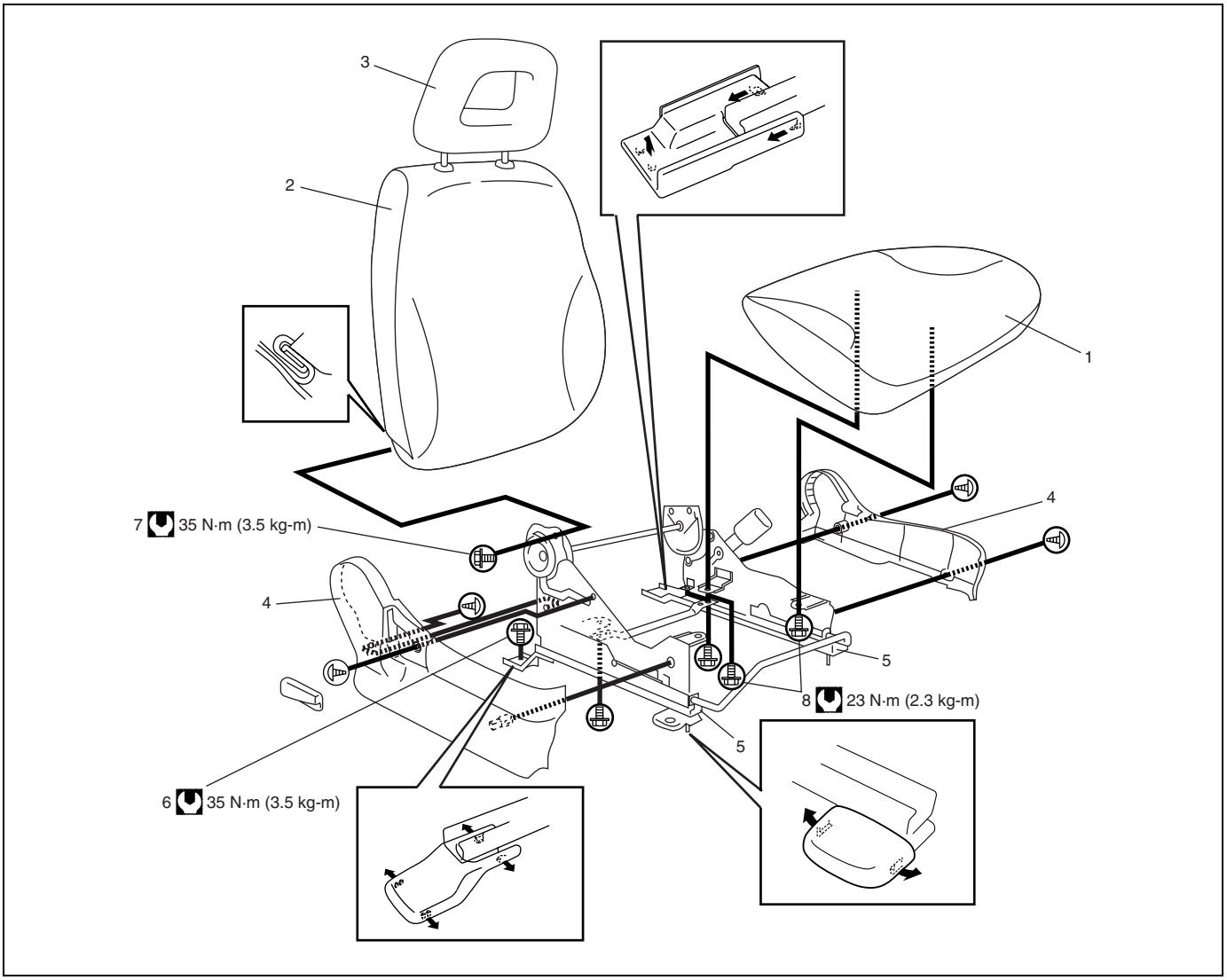

1. Seat cushion	4. Cover	7. Reclining bolt
2. Seat back	5. Seat adjuster	8. Seat cushion bolt
3. Head rest	6. Seat adjuster bolt	Tightening torque

REMOVAL

1) Remove console box.
2) Remove 4 mounting bolts to remove seat assembly.
3) Disassemble and repair seat as necessary.

INSTALLATION

Reverse removal procedure to install front seat.
Torque to specifications as shown.

REAR SEAT

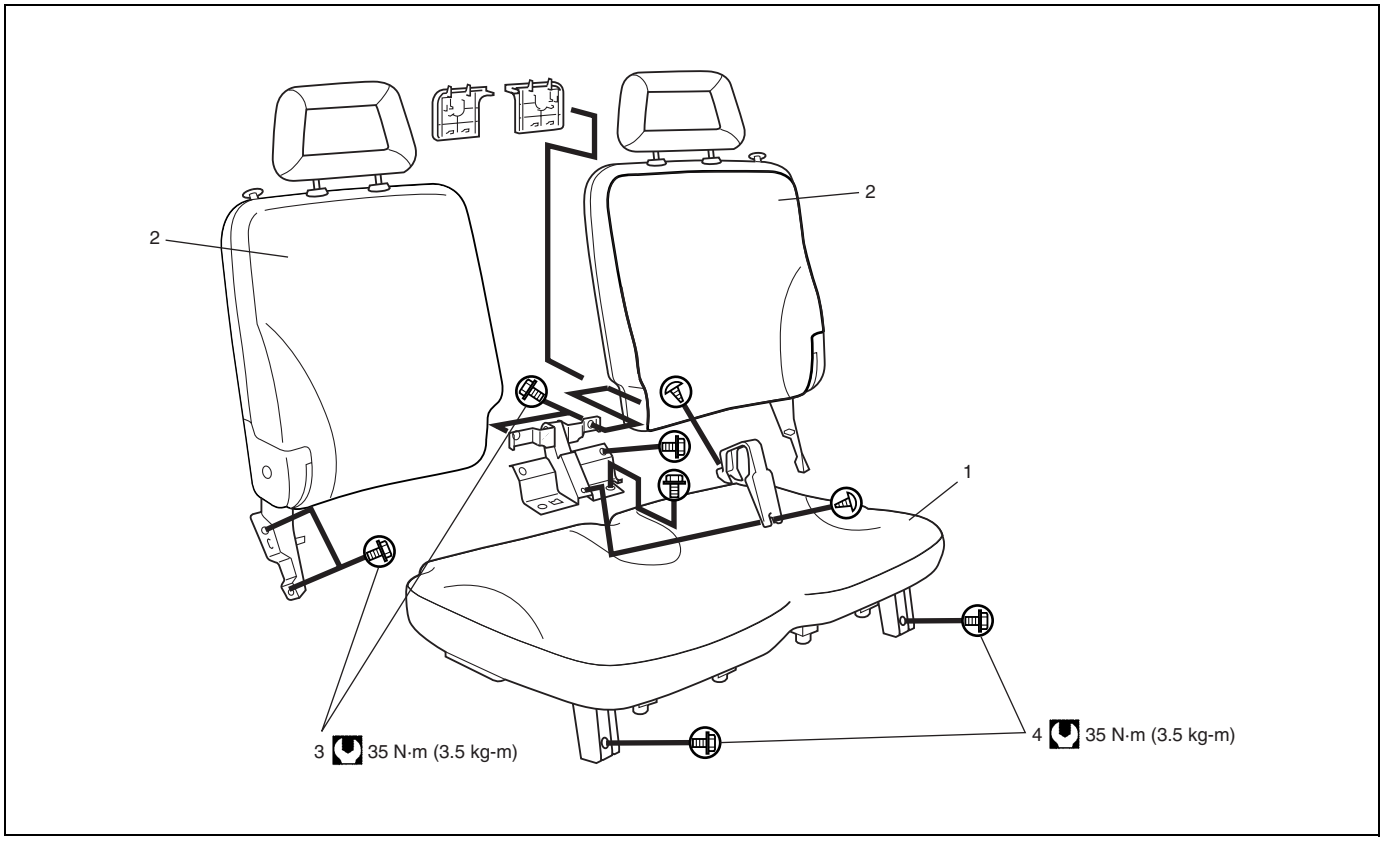

1. Seat cushion	4. Seat cushion bolt
2. Seat back	Tightening torquer
3. Seat back bolt	

REMOVAL

1) Remove 2 seat cushion bolts to remove seat cushion.
2) Remove 3 seat back bolts to remove seat back.
3) Disassemble and repair seat as necessary.

INSTALLATION

Reverse removal procedure to install rear seat.
Torque to specifications as shown.

SECURITY AND LOCKS

FRONT DOOR LOCK ASSEMBLY

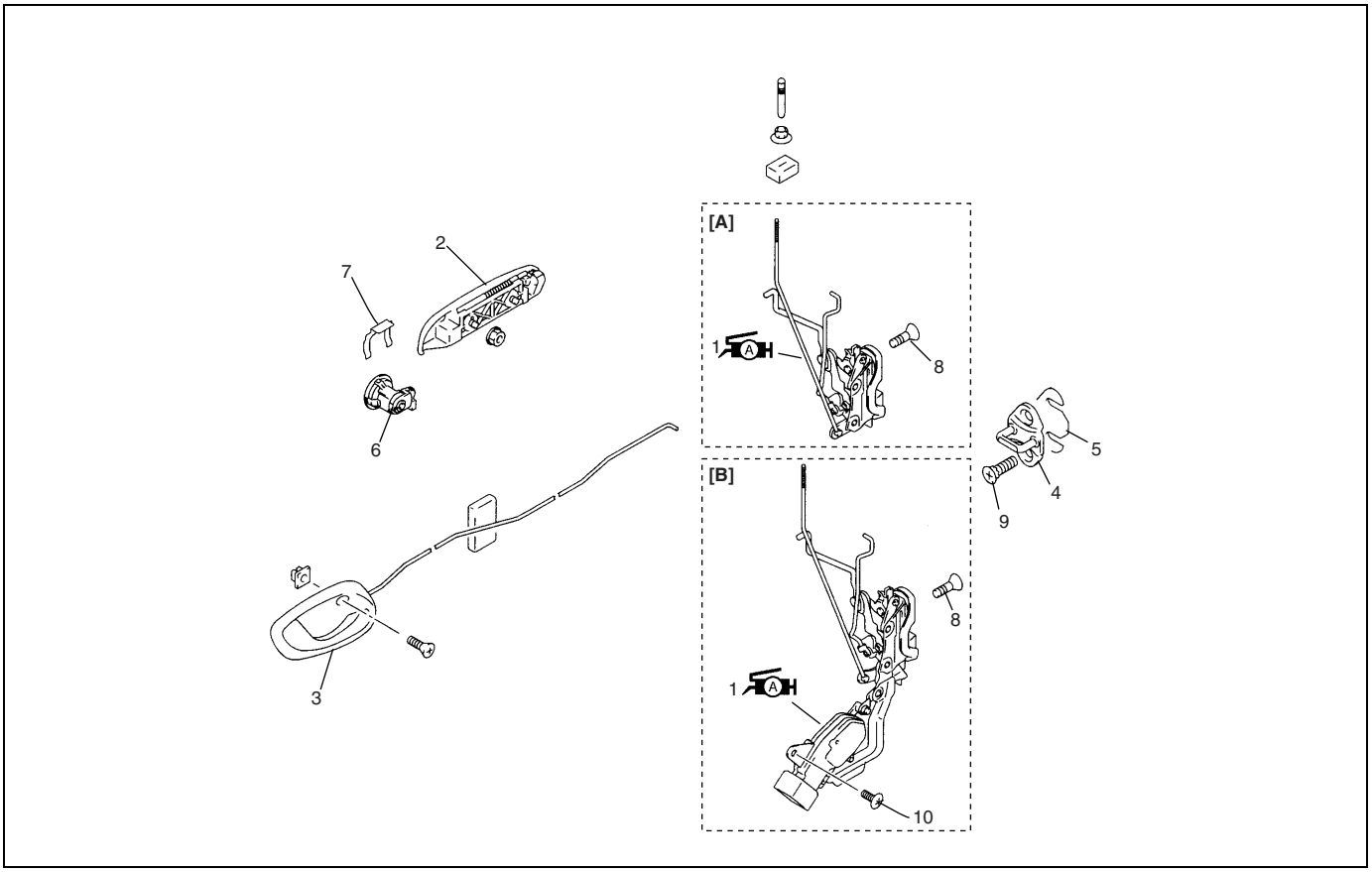

	[A] : Without power door lock model	3. Inside handle bezel	7. Key cylinder retainer
	[B] : With power door lock model	4. Latch striker	8. Door latch screw
A	1. Front door latch assembly : Apply lithium grease 99000-25010 to sliding part	5. Shim	9. Door latch striker screw
	2. Outside handle	6. Key cylinder	10. Door latch actuator screw

REMOVAL

1) Remove door trim and door sealing cover, refer to steps 1) to 6) of “REMOVAL” under “FRONT DOOR GLASS” in this section.
2) Raise window all the way up.
3) Remove door sash.

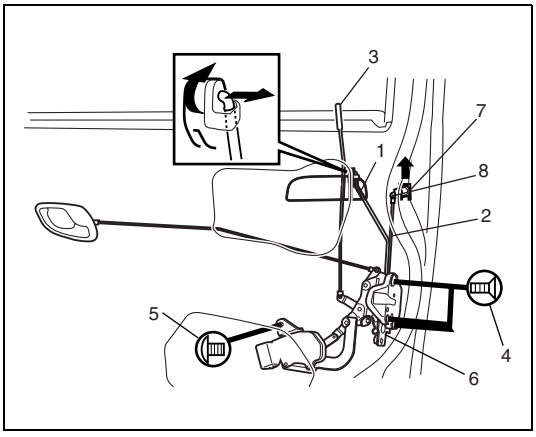

4) Disconnect door opening control rod (1) from outside handle.
5) Disconnect door latch control rod (2).
6) Disconnect door lock motor lead wire (if equipped).
7) Remove door lock knob (3).
8) Loosen door latch screw (4), door latch actuator screw (5) (if equipped power door lock) and remove door lock assembly (6).
9) Remove key cylinder retainer (7).
10) Remove key cylinder (8).

INSTALLATION

Reverse removal procedure to install front door lock assembly noting the following instructions.

- Apply grease to sliding parts of door latch assembly.

Grease 99000-25010

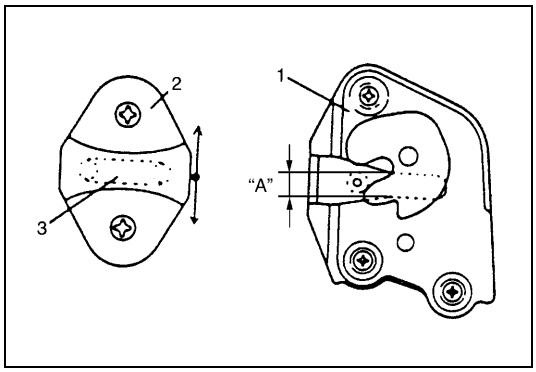

- Move door latch striker (2) up or down so its center aligns with the center of groove "A" on the door lock assembly (1) as shown.
  Striker should be moved vertically and placed level. Do not adjust door lock.

3. Shaft

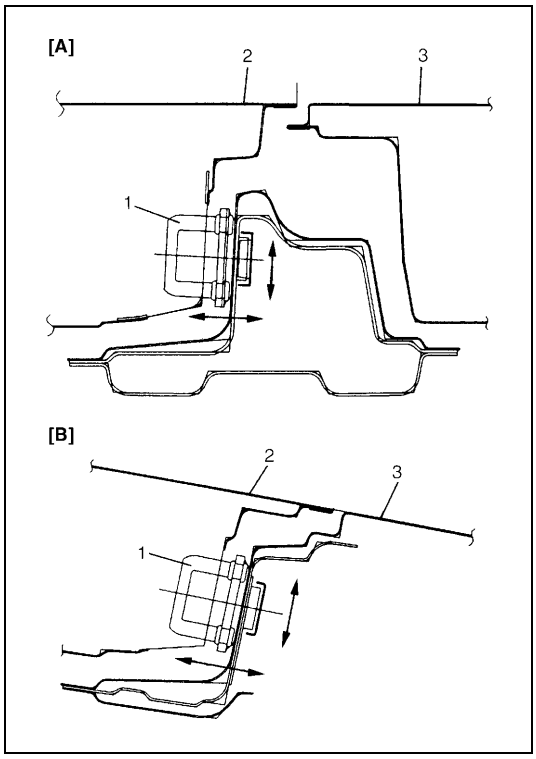

- Move door latch striker (1) sideways to adjust door outer panel surface (2) flush with rear door outer panel or body outer panel surface (3) as shown.
  In order to correctly obtain door lock operates, increase or decrease number of shims inserted between body and striker (1) to adjust it.

[A] : Front door
[B] : Rear door

INSPECTION

Check that door open and closes smoothly and properly.
Also check that door latch half look operates properly (check that door latch half lock keeps door from opening all the way) and door latch full locks securely when closed.
Adjust door latch striker position if necessary.

REAR DOOR LOCK ASSEMBLY (IF EQUIPPED)

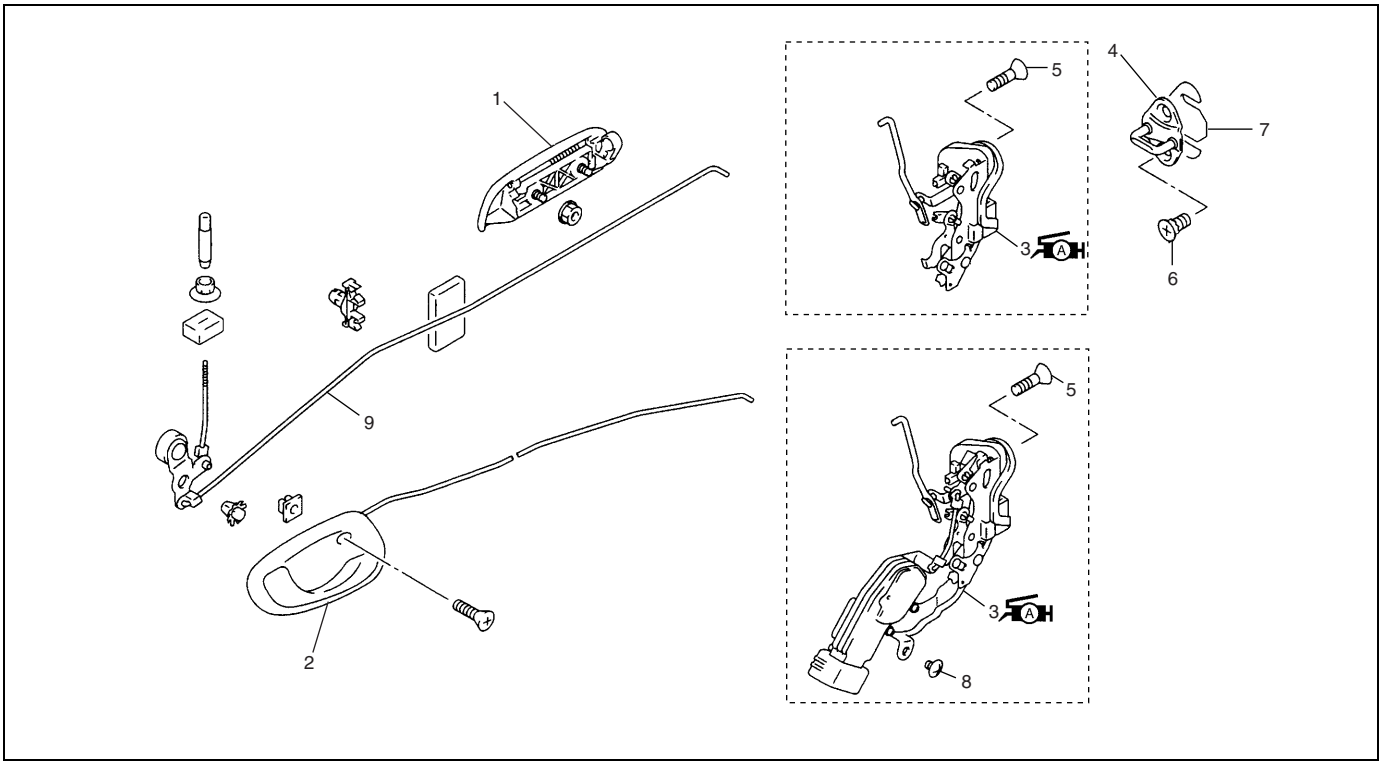

	1. Outside handle	4. Latch striker	7. Shim
	2. Inside handle bezel	5. Door latch screw	8. Door latch actuator screw
A H	3. Rear door latch assembly : Apply lithium grease 99000-25010 to sliding part	6. Door latch striker screw	9. Door lock control rod

REMOVAL

1) Remove door trim and door sealing cover, refer to steps 1) to 7) of "REMOVAL" under "REAR DOOR GLASS (IF EQUIPPED)" in this section.

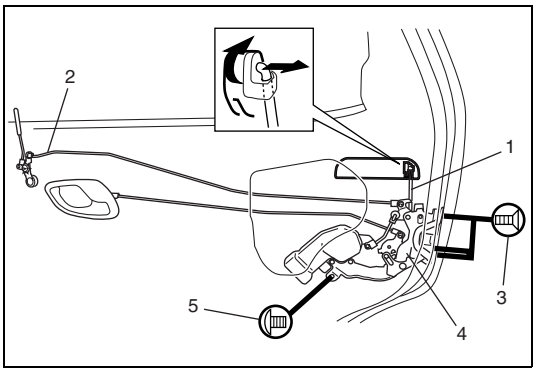

2) Disconnect door opening control rod (1) and door latch control rod (2).
3) Loosen door latch mounting screw (3), door latch actuator screw (5) (if equipped power door lock) and remove door lock assembly (4).

INSTALLATION

Reverse removal procedure to install rear door lock assembly referring to "FRONT DOOR LOCK ASSEMBLY" in this section.

BACK DOOR LOCK ASSEMBLY

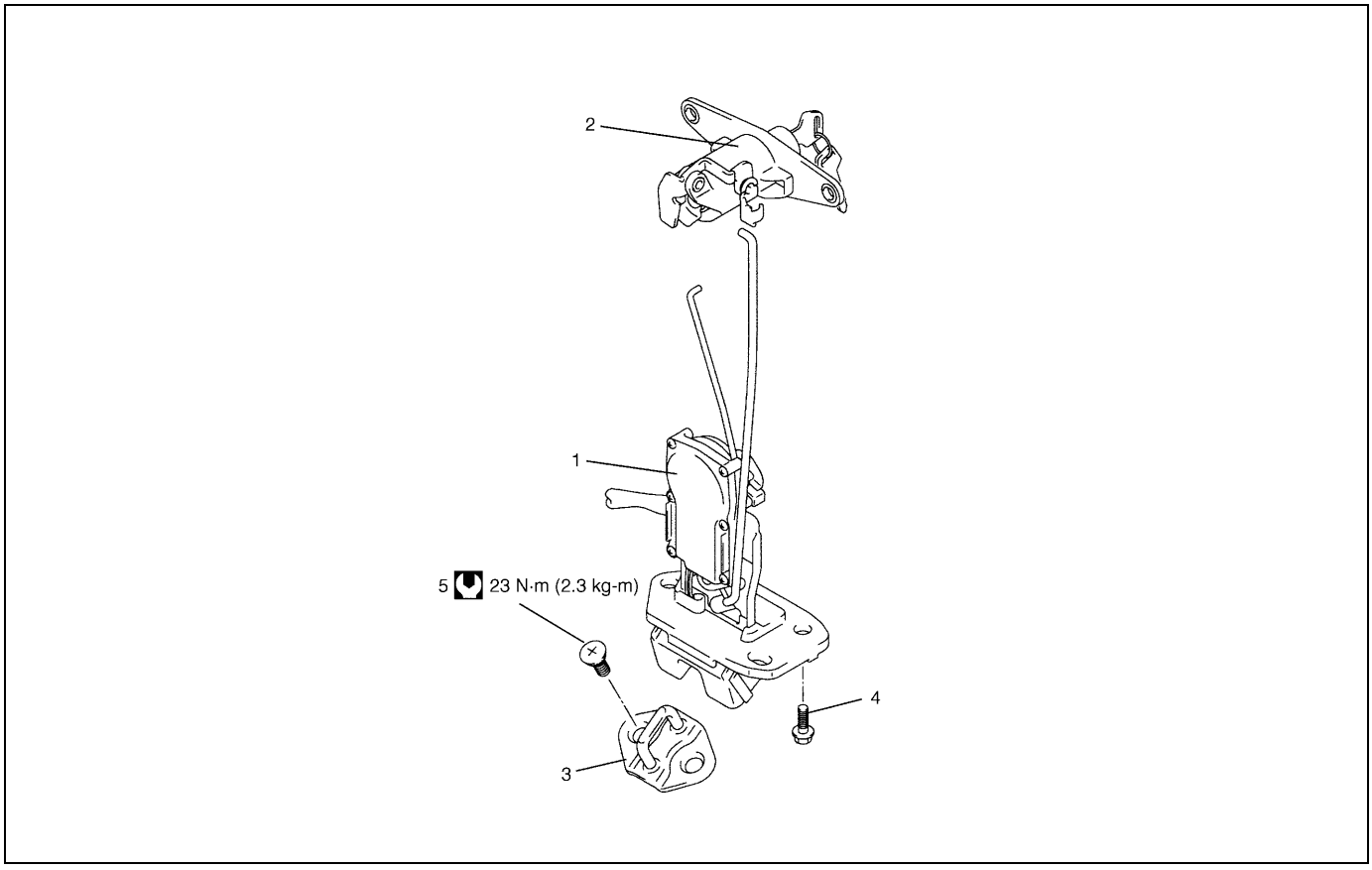

1. Back door latch assembly	3. Latch striker	5. Latch striker screw
2. Back door lock cylinder	4. Door latch screw	Tightening torque

REMOVAL

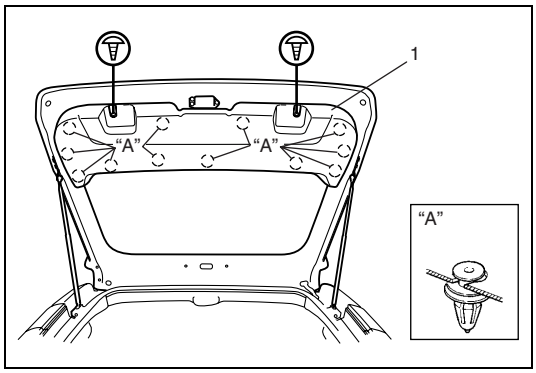

1) Remove door trim (1).

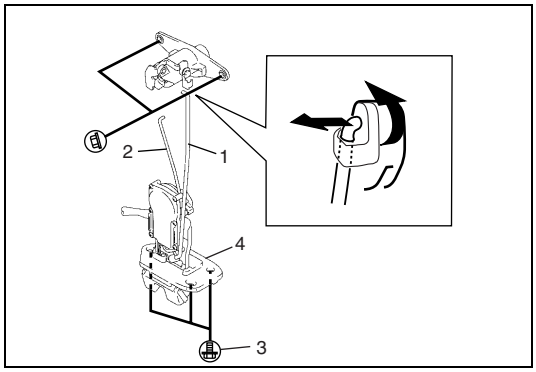

2) Disconnect door lock control rod (1).
   Disconnect control rod (2).
3) Disconnect door lock motor lead wire (if equipped).
4) Loosen door latch screw (3) and remove door latch assembly (4).

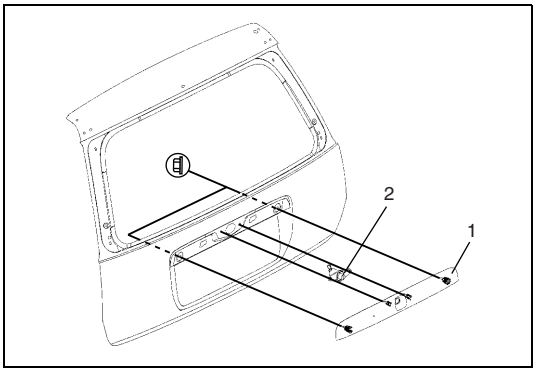

5) Remove back door licence garnish (1).
6) Remove back door lock cylinder (2).

INSTALLATION

Reverse removal procedure to install back door lock assembly noting the following instruction.

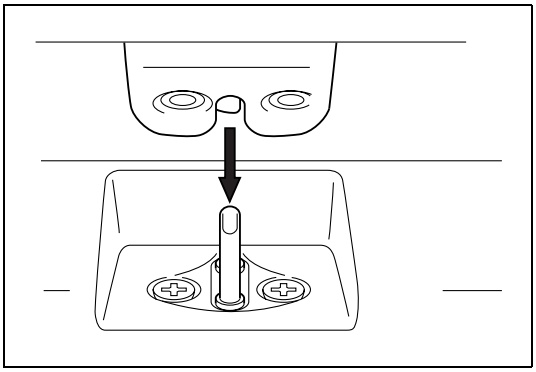

- Adjust door latch striker so that its center aligns with the center of groove in door latch base.

INSPECTION

Check that door open and closes smoothly and properly.
Also check that door latch half lock operates properly (Check that door latch half lock keeps door from opening all the way) and door latch full locks securely closed.
Adjust door latch striker position if necessary.

KEY CODING

KEY USAGE AND IDENTIFICATION

Key is used for ignition and door lock cylinder. Keys are cut on both edges to make them reversible.
Key identification is obtained from five character key code stamped on key code tag. Using this key code, key code cutting combination can be determined from a code list (available to owners of key cutting equipment from suppliers).
If key codes are not available from records or tags, key code can be obtained from the right hand door lock cylinder (if lock has not been replaced). Lock cylinders supplied by the factory as service parts are unmarked.
If original key is available, key code cutting combination can be determined by laying key.

IGNITION SWITCH LOCK CYLINDER

REMOVAL AND INSTALLATION

Refer to “STEERING LOCK ASSEMBLY (IGNITION SWITCH)” in Section 3C.

ELECTRICAL DIAGNOSIS

For ignition switch electrical troubleshooting, refer to “IGNITION SWITCH” in Section 8.

EXTERIOR AND INTERIOR TRIM

FLOOR CARPET

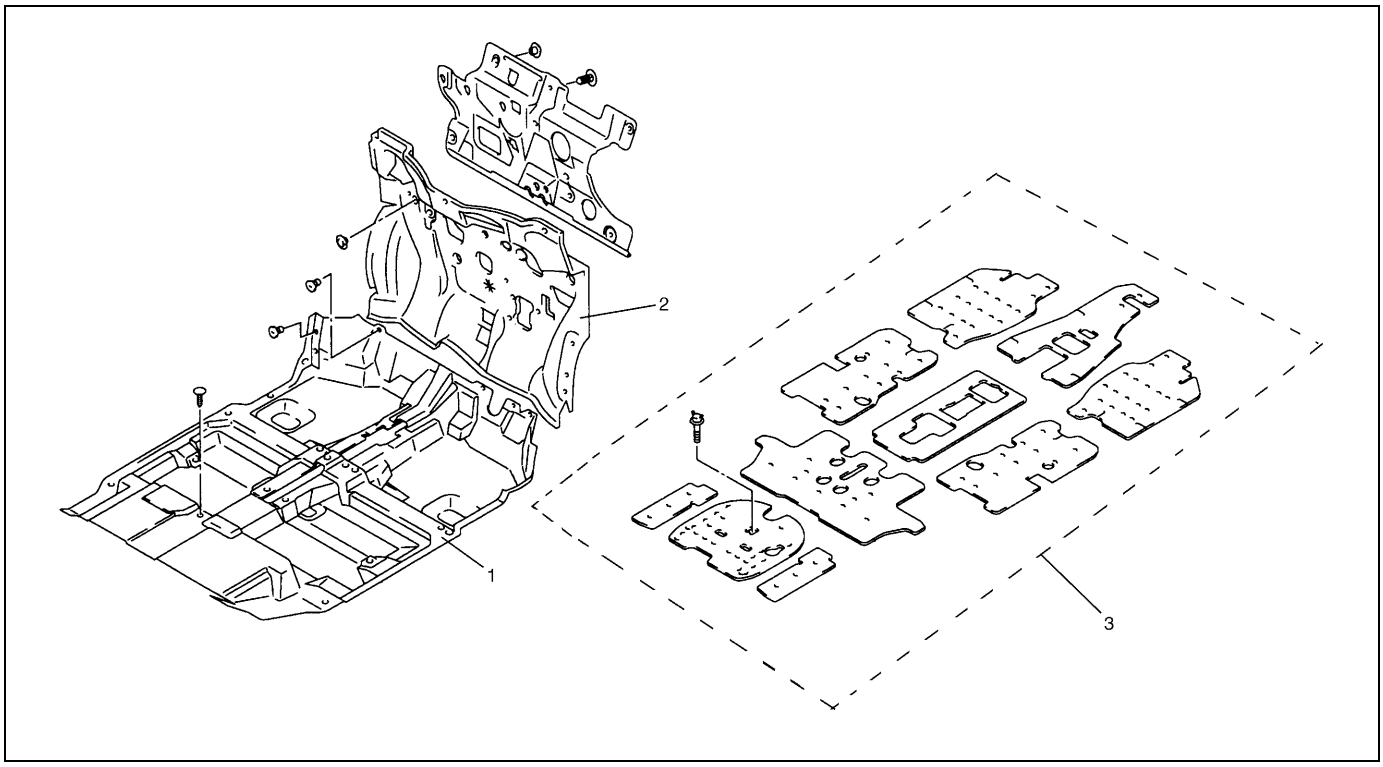

1.	Floor carpet
2.	Dash panel silencer
3.	Silencer seat

REMOVAL

1) Remove front seats and rear seat cushion.
2) Remove seat belt lower anchor bolt.
3) Remove dash side trims, front side sill scuffs, center pillar inner lower trims, quarter inner trims and rear side sill scuffs.
4) Remove parking brake lever cover and console box.
5) Remove floor carpet.

INSTALLATION

Reverse removal sequence to install front floor carpet, noting the following instruction.

- For tightening torque of seat belt anchor bolt, refer to “FRONT SEAT BELT” in Section 10.

HEAD LINING

REMOVAL

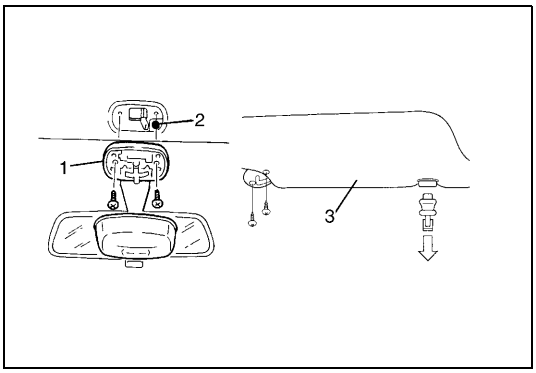

1) Remove interior light (1).
2) Remove head lining clip (2).
3) Remove sun visor (3).

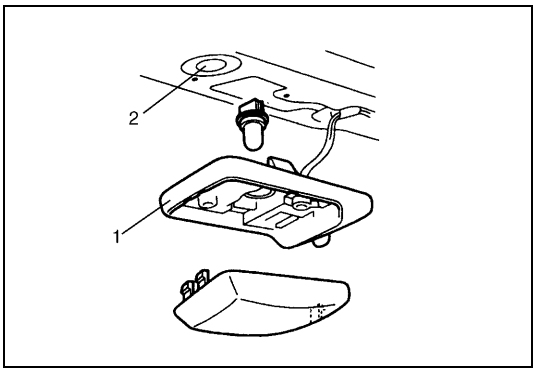

4) Remove luggage room light (1).
5) Remove head lining clip (2).

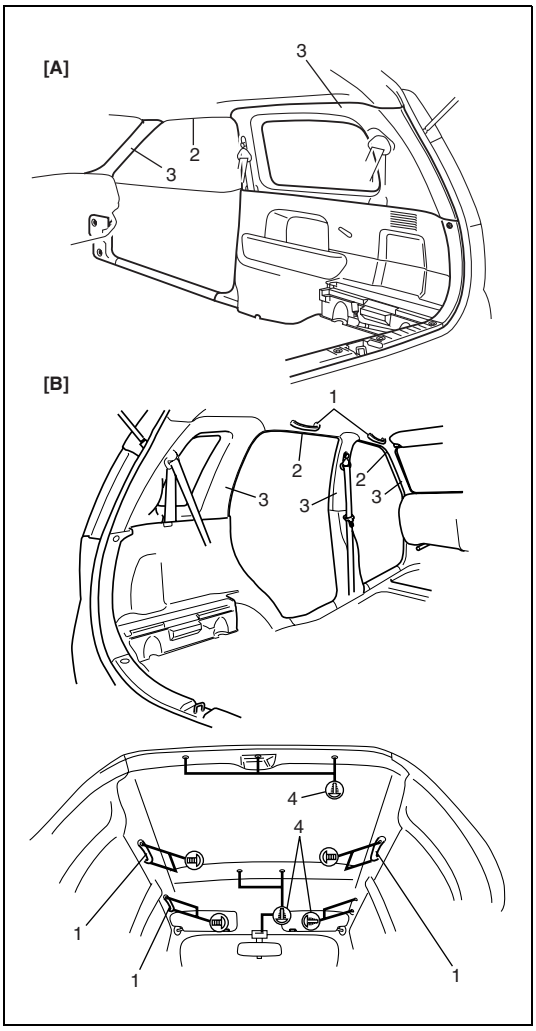

6) Remove assistant grip (1).
7) Remove door opening trim (2) and remove inner trims covering headlining (3).
8) Remove head lining clips (4) and remove head lining.

NOTE:

Adhesive is used to attach head lining.
Clear adhesive from headlining and roof after removing head lining if applied.

[A] : For 3-door model
[B] : For 5-door model

INSTALLATION

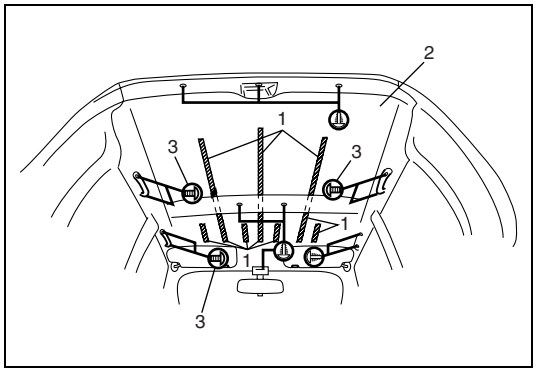

Reverse removal procedure to install head lining noting the following instructions.

- Apply double-face tape (1) to head lining (2) as shown figure, and then install head lining (2).
- Tighten assistant grip screw (3) to specified torque.

Tightening torque
Assistant grip screw : 4 N·m (0.4 kg-m, 2.8 lb-ft)

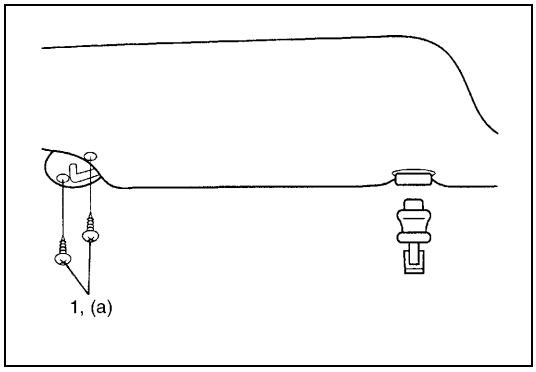

- Tighten sun visor screw (1) to specified torque.

Tightening torque
Sun visor screw (a) : 4 N·m (0.4 kg-m, 2.8 lb-ft)

PAINT AND COATINGS

ANTI-CORROSION TREATMENT

WARNING:

Standard shop practices, particularly eye protection, should be followed during the performance of the below-itemized operations to avoid personal injury.

As rust proof treatment, steel sheets are given corrosion resistance on the interior and/or exterior.
These corrosion resistance steel sheet materials are called one of two-side galvanized steel sheets.
It is for the sake of rust protection that these materials are selected and given a variety of treatments as described blow.

- Steel sheets are treated with cathodic electroprimer which is excellent in corrosion resistance.
- Rust proof wax coatings are applied to door and side sill insides where moisture is liable to stay.
- Vinyl coating is applied to body underside and wheel housing inside.
- Sealer is applied to door hem, engine compartment steel sheet-to-steel sheet joint, and the like portions to prevent water penetration and resulting in rust occurrence.

In panel replacement or collision damage repair, leaving the relevant area untreated as it is in any operation which does disturb the above-mentioned rust proof treatment will cause corrosion to that area. Therefore, it is the essential function of any repair operation to correctly recoat the related surfaces of the relevant area.
All the metal panels are coated with metal conditioners and primer coating during vehicle production. Following the repair and/or replacement parts installation, every accessible bare metal surface should be cleaned and coated with rust proof primer. Perform this operation prior to the application of sealer and rust proof wax coating.
Sealer is applied to the specific joints of a vehicle during production. The sealer is intended to prevent dust from entering the vehicle and serves also as an anticorrosion barrier. The sealer is applied to the door and hood hem areas and between panels. Correct and reseal the originally sealed joints if damaged. Reseal the attaching joints of a new replacement panel and reseal the hem area of a replacement door or hood.
Use a quality sealer to seal the flanged joints, overlap joints and seams. The sealer must have flexible characteristics and paint ability after it's applied to repair areas.
For the sealer to fill open joints, use caulking material. Select a sealer in conformance with the place and purpose of a specific use. Observe the manufacturer's label-stand instructions when using the sealer.
In many cases, repaired places require color painting. When this is required, follow the ordinary techniques specified for the finish preparation, color painting and undercoating build-up.
Rust proof wax, a penetrative compound, is applied to the metal-to-metal surfaces (door and side sill insides) where it is difficult to use ordinary undercoating material for coating. Therefore, when selecting the rust proof wax, it may be the penetrative type.
During the undercoating (vinyl coating) application, care should be taken that sealer is not applied to the engine-related parts and shock absorber mounting or rotating parts. Following the under coating, make sure that body drain holes are kept open.
The sequence of the application steps of the anti-corrosion materials are as follows:

1) Clean and prepare the metal surface.
2) Apply primer.
3) Apply sealer (all joints sealed originally).
4) Apply color in areas where color is required such as hem flanges, exposed joints and under body components.
5) Apply anticorrosion compound (penetrative wax).
6) Apply undercoating (rust proof material).

SEALANT APPLICATION AREAS

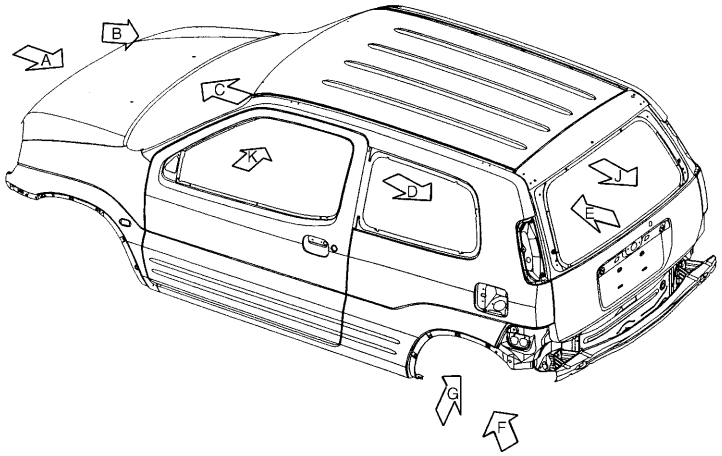

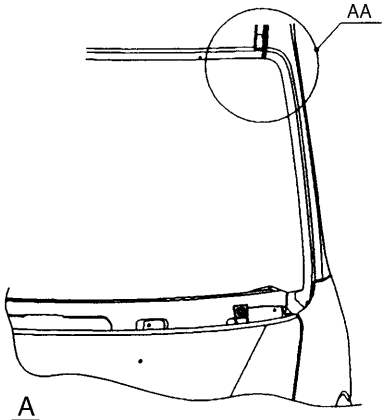

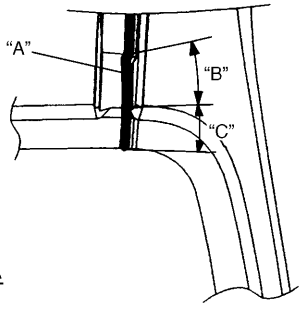

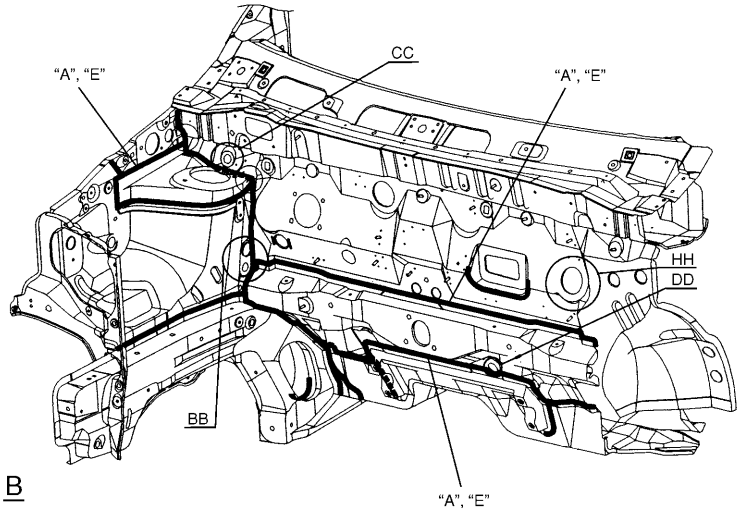

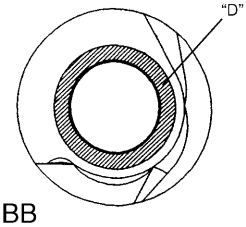

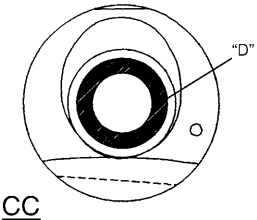

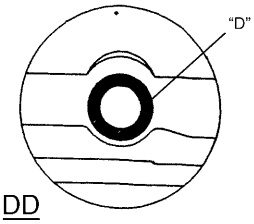

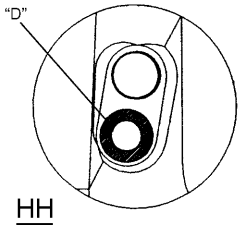

"A" : Apply sealant	"C" : Wipe off excess sealant after application	"E" : Smooth out sealant with a brush
"B" : Apply sealant without heeling	"D" : Do not apply sealant	

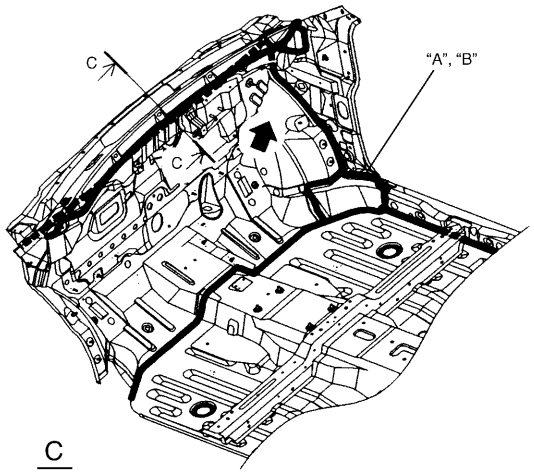

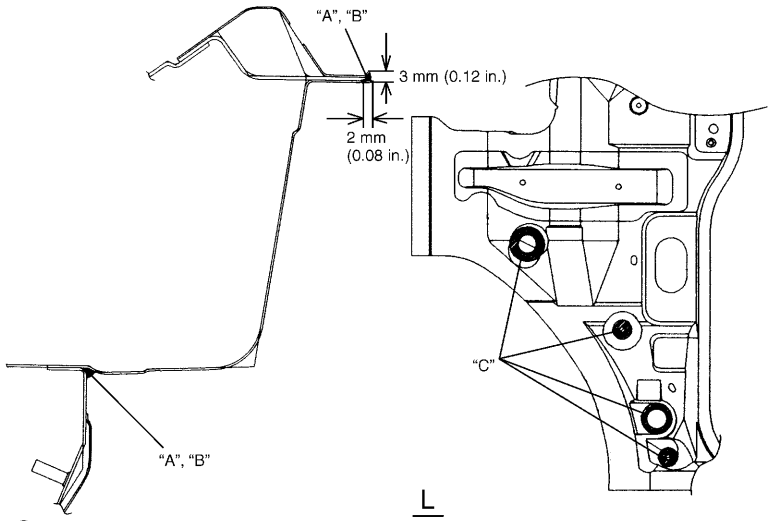

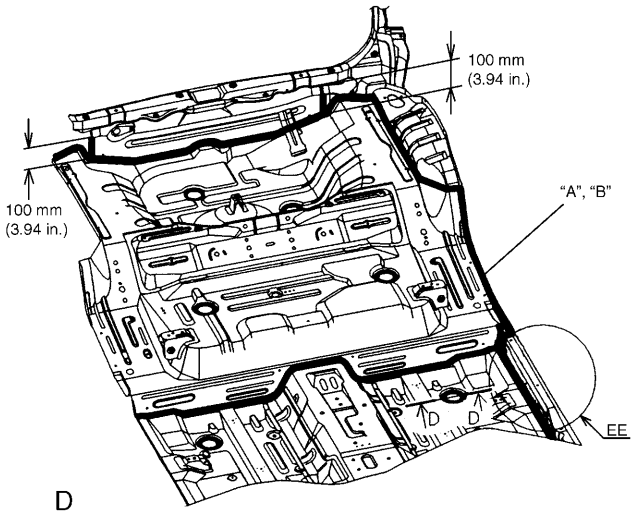

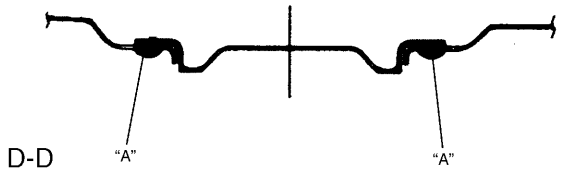

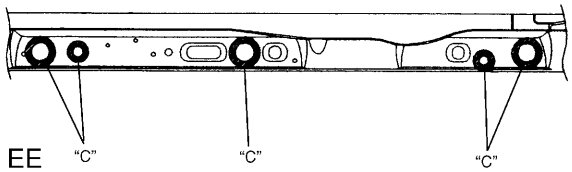

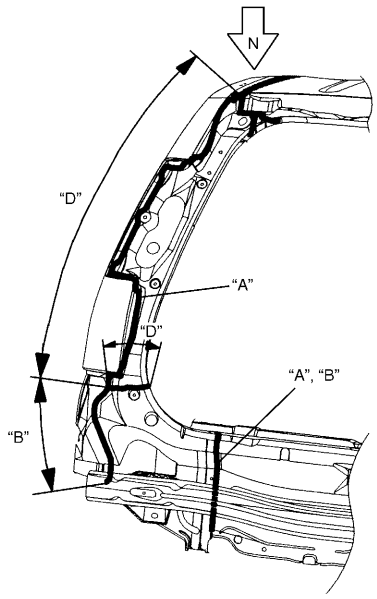

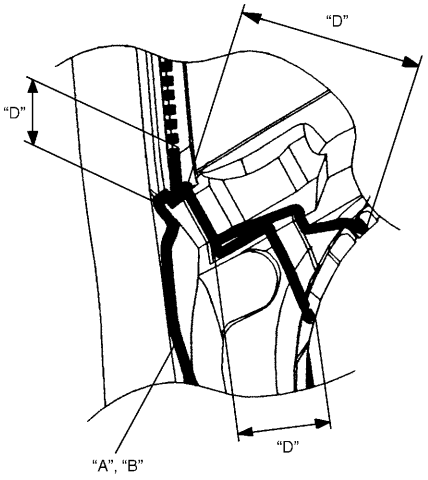

C

C-C

L

D

D-D

EE

E

N

"A" : Apply sealant	"C" : Do not apply sealant
"B" : Smooth out sealant with a brush	"D" : Wipe off excess sealant after application

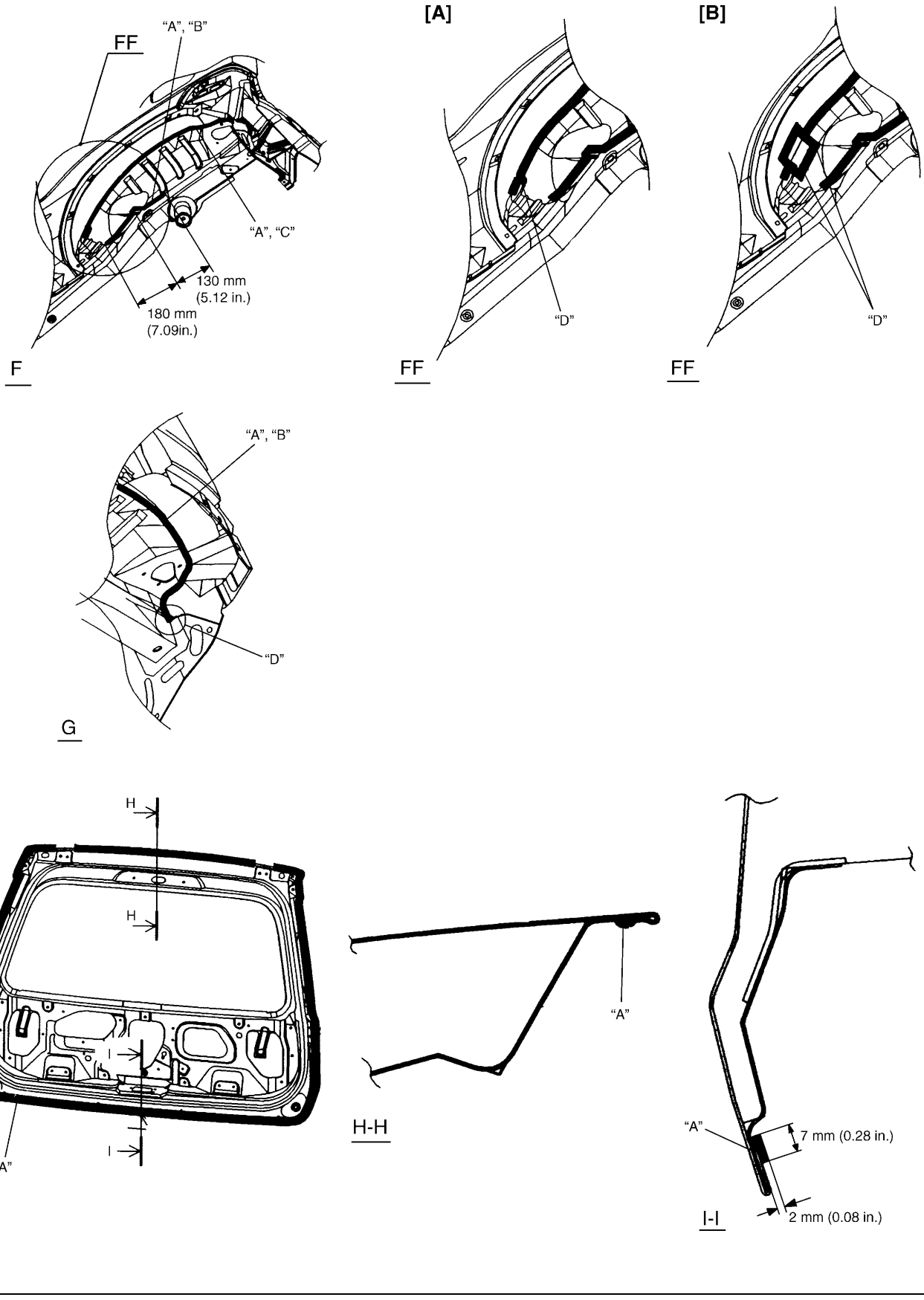

[A] : 3 door model	"A" : Apply sealant	"C" : Smooth out sealant with a brush
[B] : 5 door model	"B" : Wipe off excess sealant after application	"D" : Fill gap/hole with sealant

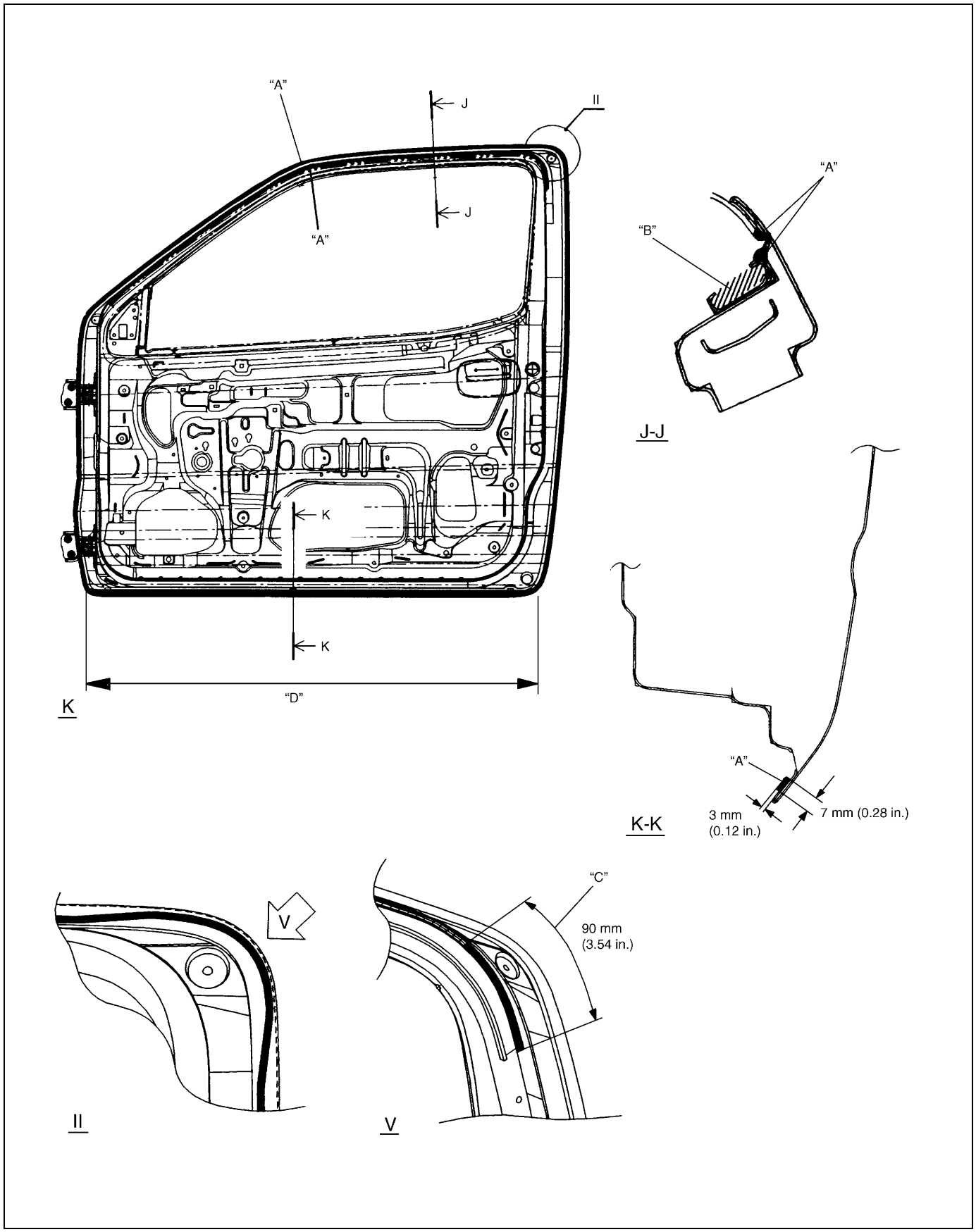

[A] : 3 door model	"C" : Wipe off excess sealant after application
"A" : Apply sealant	"D" : Never fill up drain holes with sealant
"B" : Be free from swell and protruded on hatched part	

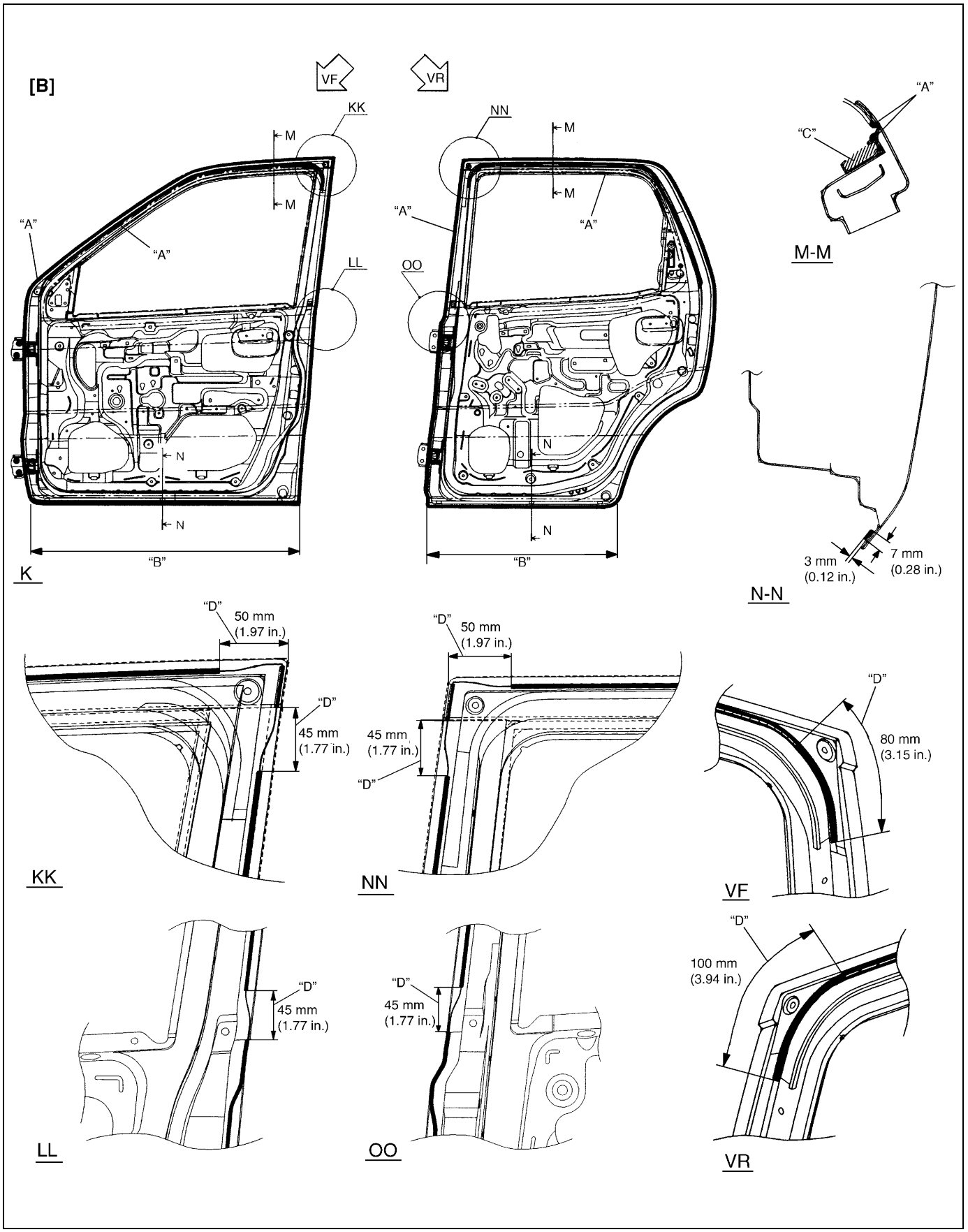

[B] : 5 door model	"C" : Be free from swell and protruded on hatched part
"A" : Apply sealant	"D" : Wipe off excess sealant after application
"B" : Never fill up drain holes with sealant	

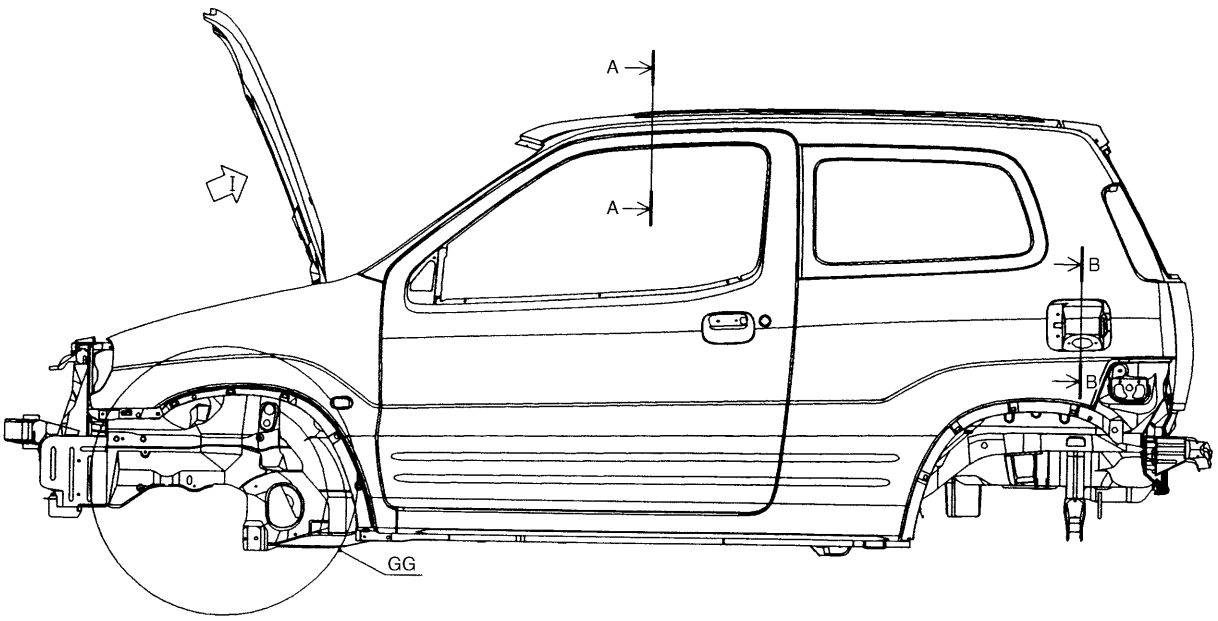

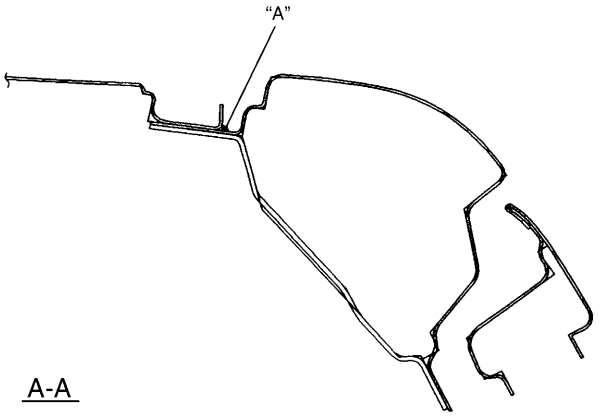

A-A

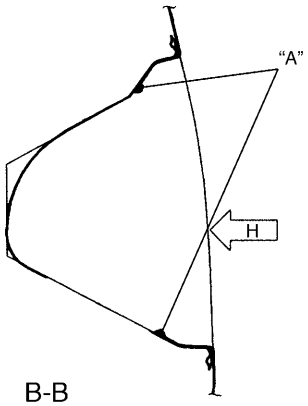

B-B

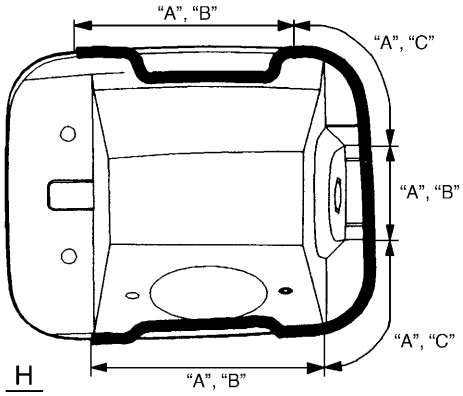

H

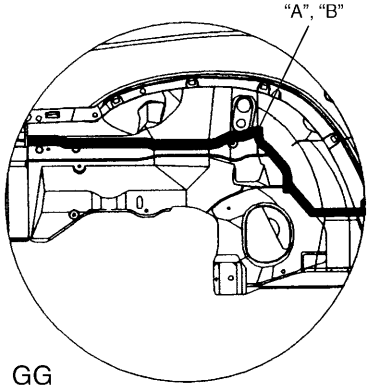

GG

"A" :	Apply sealant
"B" :	Smooth out sealant with a brush
"C" :	Wipe off excess sealant after application

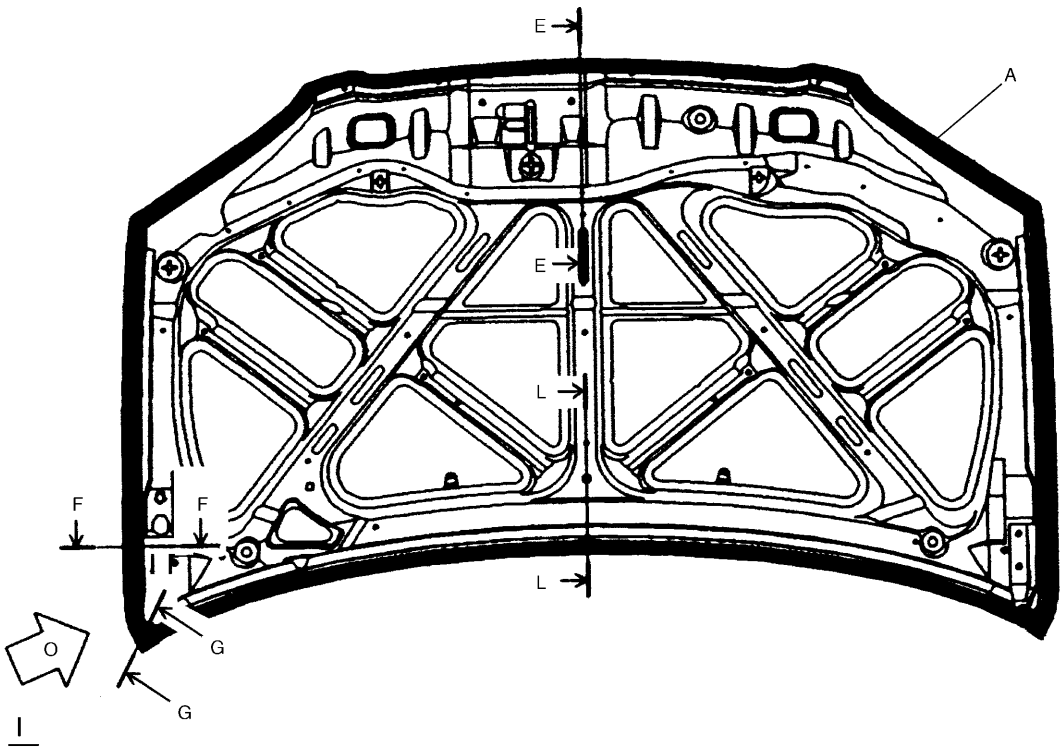

I

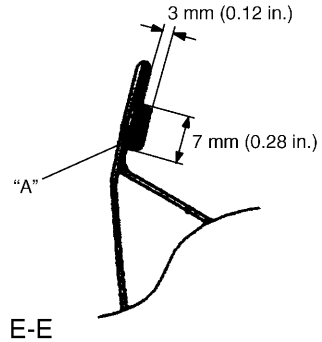

E-E

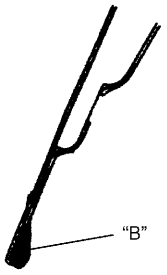

G-G

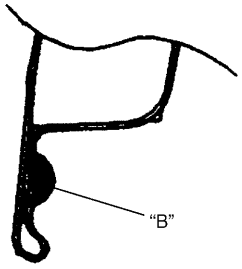

L-L

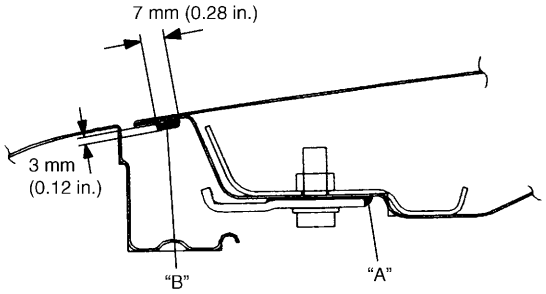

F-F

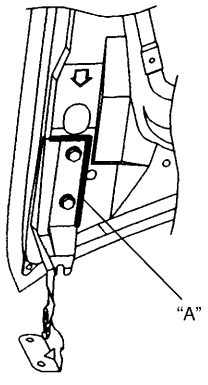

O

"A" :	Apply sealant
"B" :	Apply sealant so that top of flange covered up certainly

UNDER COATING APPLICATION AREAS

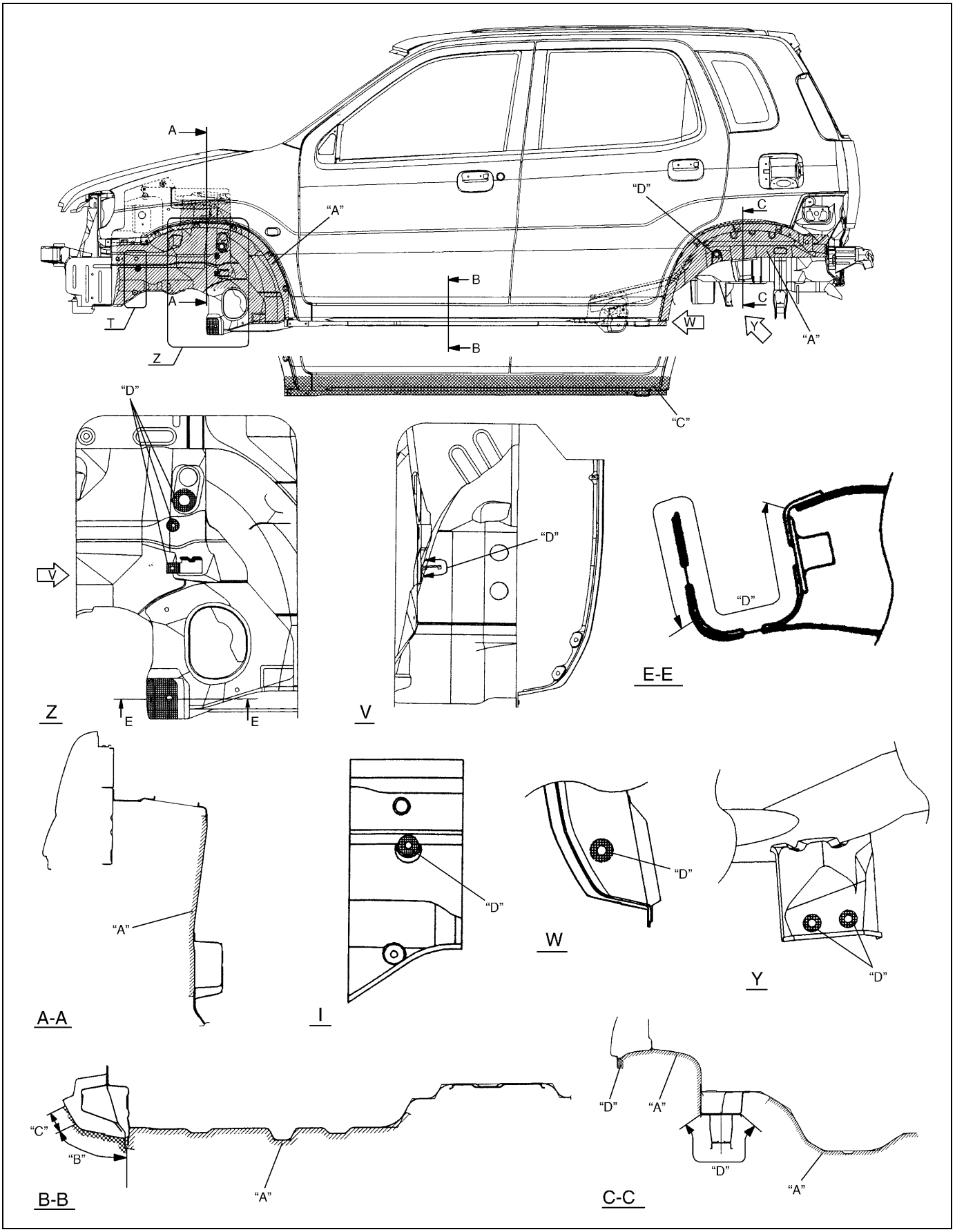

"A" : Apply undercoating (PCV, 400 µm or more)	"C" : Apply anti-chip coat (300 µm or more)
"B" : Apply anti-chip coat (100 µm or more)	"D" : Do not apply undercoating

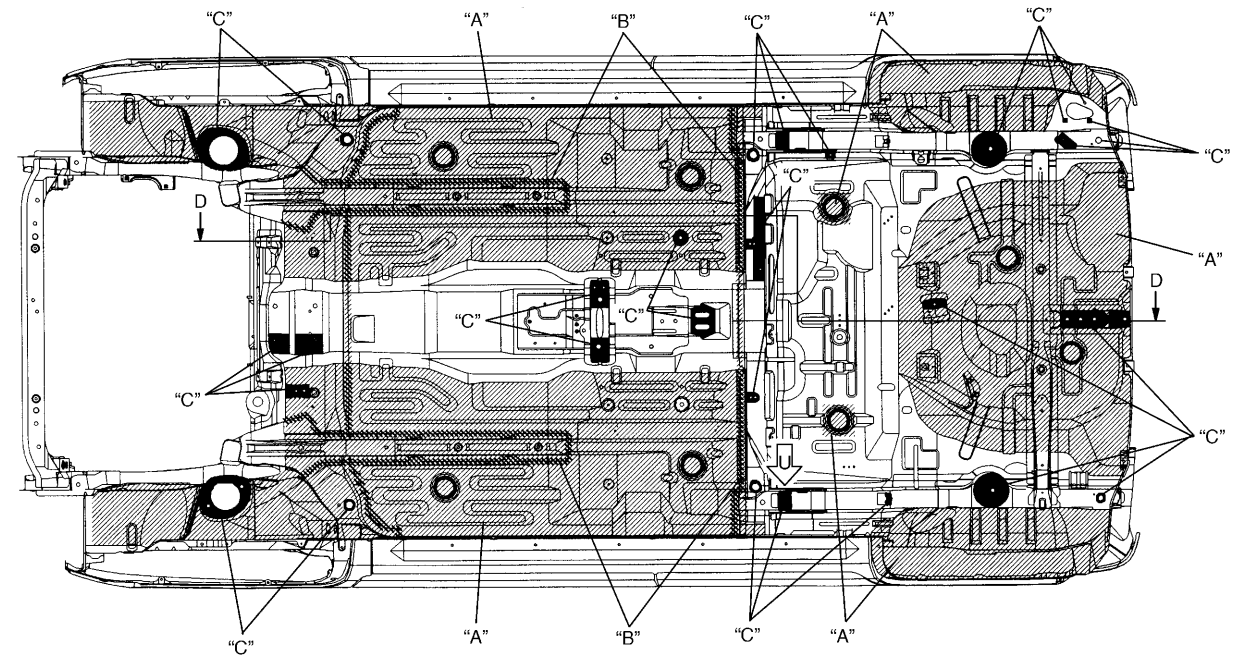

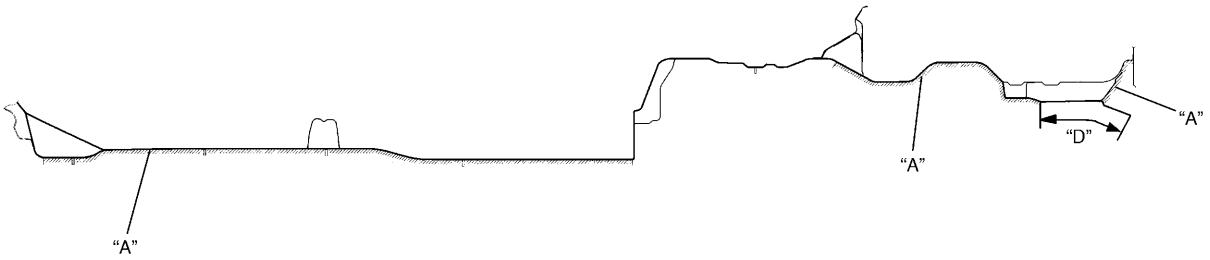

D-D

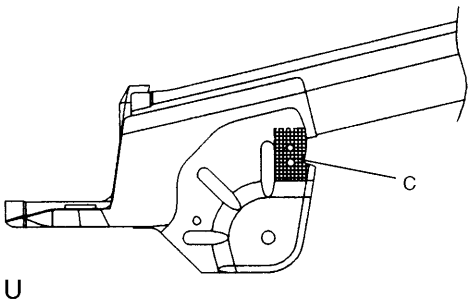

U

"A" :	Apply undercoating (PCV, 400 µm or more)
"B" :	Apply undercoating (PCV, 600 µm or more)
"C" :	Do not apply undercoating

ANTI-CORROSION COMPOUND APPLICATION AREA

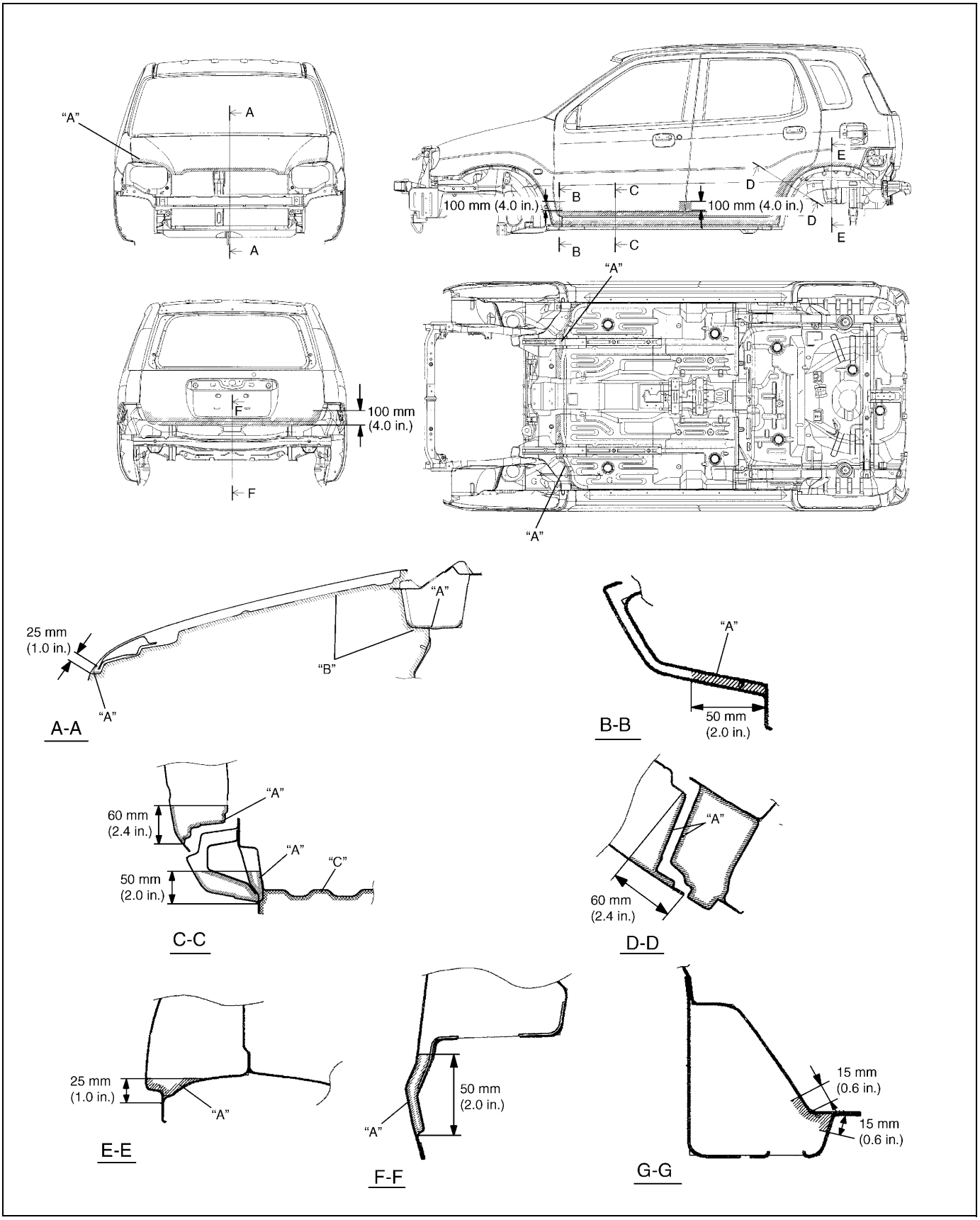

"A" :	Apply rust proof wax (hot wax 50 µm or more)
"B" :	Apply rust proof wax (low viscosity wax 10 µm or more)
"C" :	Apply rust proof wax (high viscosity wax 50 µm or more)

PLASTIC PARTS FINISHING

Paintable plastic parts are ABS plastic parts.

Painting

Rigid or hand ABS plastic needs no primer coating.
General acrylic lacquers can be painted properly over hard ABS plastic in terms of adherence.

1) Use cleaning solvent for paint finish to wash each part.
2) Apply conventional acrylic color lacquer to part surface.
3) Follow lacquer directions for required drying time. (Proper drying temperature range is 60 – 70 °C (140 – 158 °F)).

Reference

Plastic parts employ not only ABS (Acrylonitrile Butadiene Styrene) plastic but also polypropylene, vinyl, or the like plastic. Burning test method to identify ABS plastic is described below.

1) Use a sharp blade to cut off a plastic sliver from the part at its hidden backside.
2) Hold sliver with pincers and set it on fire.
3) Carefully observe condition of the burning plastic.
4) ABS plastic must raise readily distinguishable back smoke while burning with its residue suspended in air temporarily.
5) Polypropylene must raise no readily distinguishable smoke while burning.

REQUIRED SERVICE MATERIAL

Material	Recommended SUZUKI product	Use
Lithium grease	SUZUKI SUPER GREASE A (99000-25010)	• Window regulator • Door hinge
Sealant	SUZUKI BOND No. 1215 (99000-31110)	• Hood hinge • Door hinge

SECTION 10

RESTRAINT SYSTEM

WARNING:

For vehicles equipped with Supplemental Restraint (Air Bag) System with seat belt pretensioner:

- **Service on or around the air bag system components or wiring must be performed only by an authorized SUZUKI dealer. Please observe all WARNINGS and "Service Precautions" under "On-Vehicle Service" in air bag system section before performing service on or around the air bag system components or wiring. Failure to follow WARNINGS could result in unintentional activation of the system or could render the system inoperative. Either of these two conditions may result in severe injury.**
- **The procedures in this section must be followed in the order listed to disable the air bag system temporarily and prevent false diagnostic trouble codes from setting. Failure to follow procedures could result in possible activation of the air bag system, personal injury or otherwise unneeded air bag system repairs.**

CAUTION:

When fasteners are removed, always reinstall them at the same location from which they were removed. If a fastener needs to be replaced, use the correct part number fastener for that application. If the correct part number fastener is not available, a fastener of equal size and strength (or stronger) may be used. Fasteners that are not reused, and those requiring thread-locking compound, will be called out. The correct torque value must be used when installing fasteners that require it. If the above procedures are not followed, parts or system damage could result.

CONTENTS

GENERAL DESCRIPTION 10-2
SYSTEM SPECIFICATION 10-3
SEAT BELT PRETENSIONER (IF EQUIPPED) 10-3
DIAGNOSIS 10-3
INSPECTION AND REPAIR REQUIRED AFTER ACCIDENT 10-3
ON-VEHICLE SERVICE 10-4
SERVICE PRECAUTIONS 10-4
SERVICE AND DIAGNOSIS 10-4
DISABLING AIR BAG SYSTEM 10-4
ENABLING AIR BAG SYSTEM 10-4
HANDLING AND STORAGE 10-4
DISPOSAL 10-4
FRONT SEAT BELT 10-5
REAR SEAT BELT 10-8

GENERAL DESCRIPTION

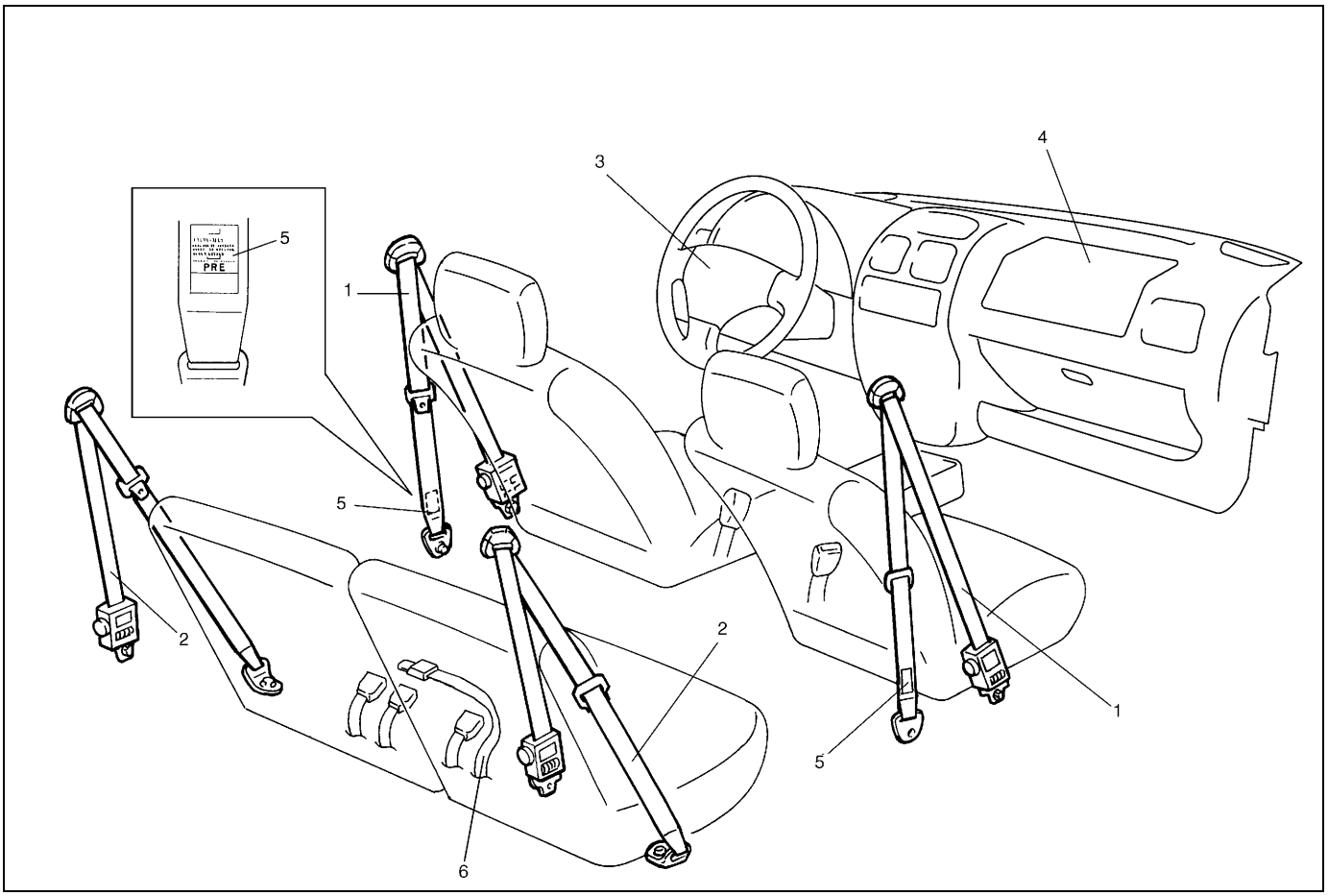

1. Front seat belt	4. Passenger air bag (if equipped)
2. Rear seat belt	5. Label (for seat belt with pretensioner)
3. Driver air bag (if equipped)	6. Rear center seat belt

Seat Belt with ELR

The seat belt with emergency locking retractor (ELR) is designed so that it locks immediately (to prevent the webbing from being pulled out of the retractor any further) when any of the following items is detected as exceeding each set value;

- speed at which the webbing is pulled out of the retractor,
- acceleration or deceleration of the vehicle speed, and
- inclination.

Seat Belt with A-ELR

The automatic and emergency locking retractor (A-ELR) works as an Emergency Locking Retractor (ELR) till its webbing is pulled all the way out and then on as an Automatic Locking Retractor (ALR) till it is retracted fully.
ALR: Automatically locks when the webbing is pulled out from the retractor and allowed to retract even a little. Then the webbing can not be pulled out any further, unless it is wound all the way back into the retractor, which releases the lock and allows the webbing to be pulled out.

Seat Belt with ELR and Pretensioner

The seat belt with ELR and a pretensioner has a pretensioner mechanism which operates in linkage with the air bag in addition to the above described ELR. The pretensioner takes up the sag of the seat belt in occurrence of a front collision with an impact larger than a certain set value, thereby enhancing restraint performance.

Driver and Front Passenger Air Bags and Seat Belt Pretensioners

With the air bag system which includes air bags for both the driver's and passenger's sides as well as the seat belt pretensioners, the pretensioner takes up the sag of the seat belt, the driver air bag (inflator) module is deployed from the center of the steering column and the passenger air bag (inflator) module from the top of the instrument panel in front of the front passenger seat in occurrence of a front collision with an impact larger than a certain set value to supplement protection offered by the driver and front passenger seat belts.

SYSTEM SPECIFICATION

	Type 1	Type 2	Type 3
Front seat	• Seat belt with ELR	• Driver air bag • Seat belt with ELR and pretensioner	• Driver and front passenger air bags • Seat belt wit ELR and pretensioner
Rear seat	• Seat belt with A-ELR (right and left) • Seat belt (center)	• Seat belt with A-ELR (right and left) • Seat belt (center)	• Seat belt with A-ELR (right and left) • Seat belt (center)

SEAT BELT PRETENSIONER (IF EQUIPPED)

Some seat belts of the driver and front passenger seats are provided with a pretensioner as an optional function unit. The pretensioner is incorporated in retractor assembly and controlled by SDM as one of air bag system components. It will be activated at the same time as the air bag when an impact at the front of vehicle exceeds the specified value.

When servicing seat belt (retractor assembly) with pretensioner, be sure to observe all WARNINGS and CAUTIONS in this section and "SERVICE PRECAUTIONS" of "ON-VEHICLE SERVICE" in Section 10B

CAUTION:

Do not reuse the seat belt pretensioner (retractor assembly) that has operated but replace it with a new one as an assembly. For checking procedure of its operation, refer to "SERVICE PRECAUTIONS" of "ON-VEHICLE SERVICE" in Section 10B.

DIAGNOSIS

For diagnosis of air bag system (including in seat belt pretensioner), refer to Section 10B.

INSPECTION AND REPAIR REQUIRED AFTER ACCIDENT

After an accident, whether the seat belt pretensioner has been activated or not, be sure to perform checks and repairs described on "REPAIRS AND INSPECTIONS REQUIRED AFTER ACCIDENT" under "DIAGNOSIS" in Section 10B.

ON-VEHICLE SERVICE

SERVICE PRECAUTIONS

SERVICE AND DIAGNOSIS

WARNING:
If replacing seat belt is necessary, replace buckle and ELR (or webbing) together as a set. This is for the reason of ensuring locking of tongue plate with buckle.
If these parts are replaced individually, such a locking condition may become unreliable. For this reason, SUZUKI will supply only the spare buckle and ELR (or webbing) in a set part.

Before servicing or replacing seat belts, refer to following precautionary items.

- Seat belts should be normal relative to strap retractor and buckle portions.
- Keep sharp edges and damaging objects away from belts.
- Avoid bending or damaging any portion of belt buckle or latch plate.
- Do not bleach or dye belt webbing. (Use only mild soap and lukewarm water to clean it.)
- When installing a seat belt anchor bolt, it should be tightened by hand at first to prevent cross-threading and then to specified torque.
- Do not attempt any repairs on retractor mechanisms or retractor covers. Replace defective assemblies with new replacement parts.
- Keep belts dry and clean at all times.
- If there exist any parts in question, replace such parts.
- Replace belts whose webbing is cut or otherwise damaged.
- Do not put anything into trim panel opening which seat belt webbing passes through.

For Seat Belt with Pretensioner

Refer to “SERVICE AND DIAGNOSIS” of “SERVICE PRECAUTIONS” under “ON-VEHICLE SERVICE” in Section 10B.

WARNING:
When performing service on or around air bag system components or air bag system wiring, disable the air bag system. Refer to “DISABLING AIR BAG SYSTEM” of “SERVICE PRECAUTIONS” under “ON-VEHICLE SERVICE” in Section 10B.
Failure to follow procedures could result in possible air bag activation, personal injury or unneeded air bag system repairs.

DISABLING AIR BAG SYSTEM

Refer to “DISABLING AIR BAG SYSTEM” of “SERVICE PRECAUTIONS” under “ON-VEHICLE SERVICE” in Section 10B.

ENABLING AIR BAG SYSTEM

Refer to “ENABLING AIR BAG SYSTEM” of “SERVICE PRECAUTIONS” under “ON-VEHICLE SERVICE” in Section 10B.

HANDLING AND STORAGE

Refer to “HANDLING AND STORAGE” of “SERVICE PRECAUTIONS” under “ON-VEHICLE SERVICE” in Section 10B.

DISPOSAL

Refer to “DISPOSAL” of “SERVICE PRECAUTIONS” under “ON-VEHICLE SERVICE” in Section 10B.

FRONT SEAT BELT

WARNING:

- **Never attempt to disassemble or repair the seat belt pretensioner (retractor assembly). If any abnormality is found, be sure to replace it with new one as an assembly.**
- **Be sure to read "SERVICE PRECAUTIONS", before starting to work and observe every precaution during work. Neglecting them may result in personal injury or unactivation of the seat belt pretensioner when necessary.**

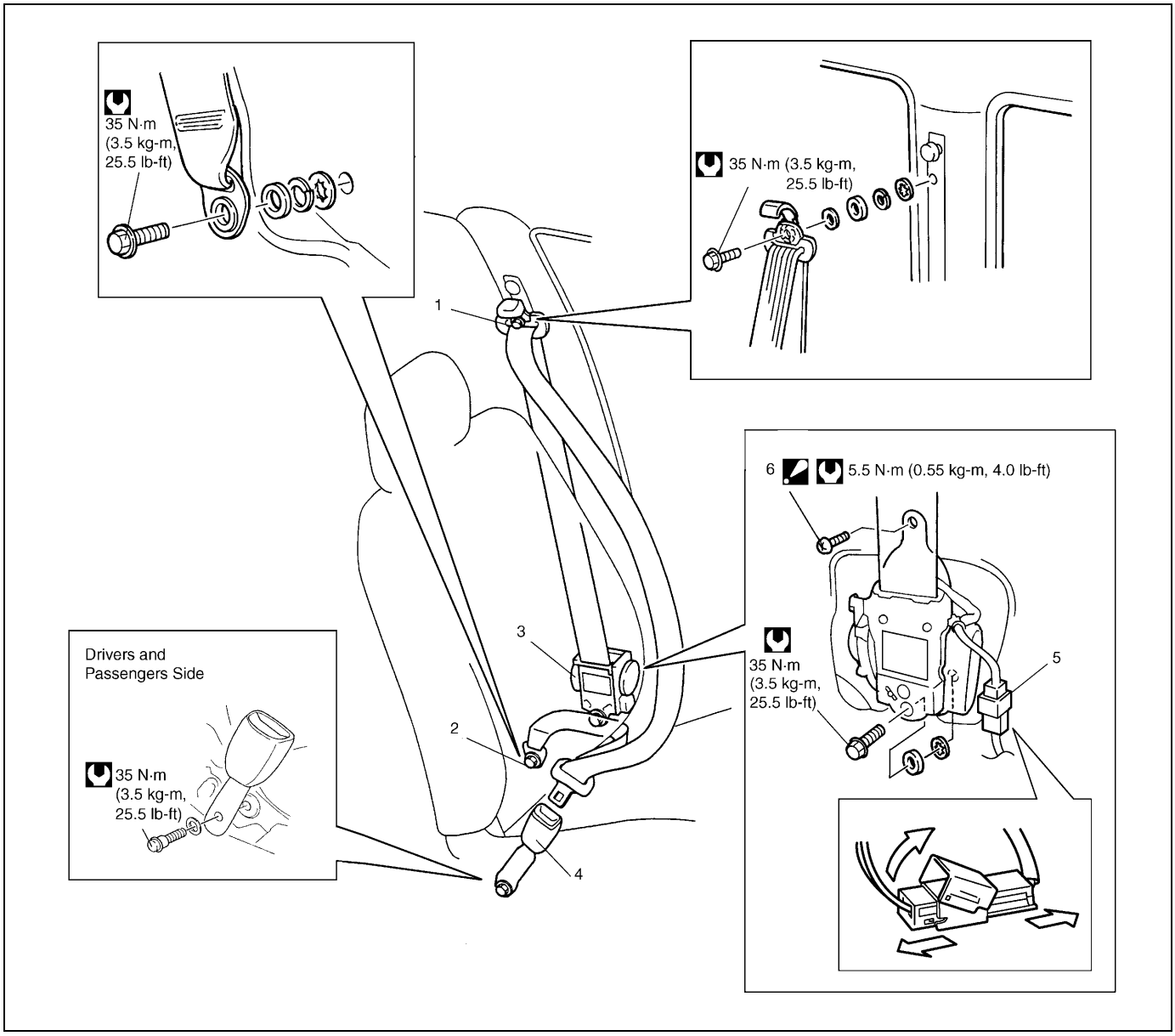

1. Upper anchor	4. Buckle	Tightening torque
2. Lower anchor	5. Yellow connector (for seat belt pretensioner) (if equipped)	
3. Retractor assembly	6. Retractor assembly upper mounting bolt : After tightening lower bolt, tightening upper bolt	

REMOVAL

1) Disconnect negative battery cable at battery.
2) Disable air bag system. Refer to “DISABLING AIR BAG SYSTEM” of “SERVICE PRECAUTIONS” under “ON-VEHICLE SERVICE” in Section 10B.
3) Remove center pillar lower trim.
4) Disconnect Yellow connector for seat belt pretensioner.
   a) Release locking of lock lever.
   b) After unlocked, disconnect to connector.
5) Remove front seat belts from the vehicle.

INSPECTION

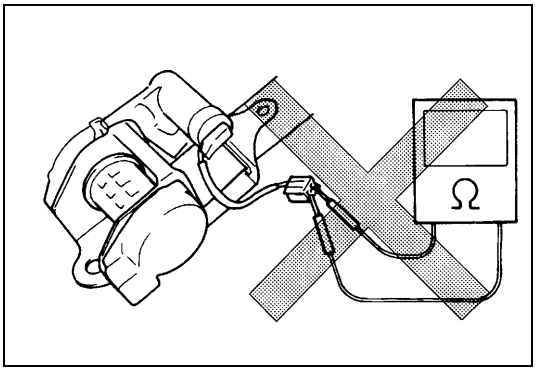

WARNING:
Never measure resistance of pretensioner or disassemble it. Otherwise, personal injury may result.

CAUTION:
If seat belt pretensioner (retractor assembly) was dropped from a height of 30 cm (1 ft) or more, it should be replaced.

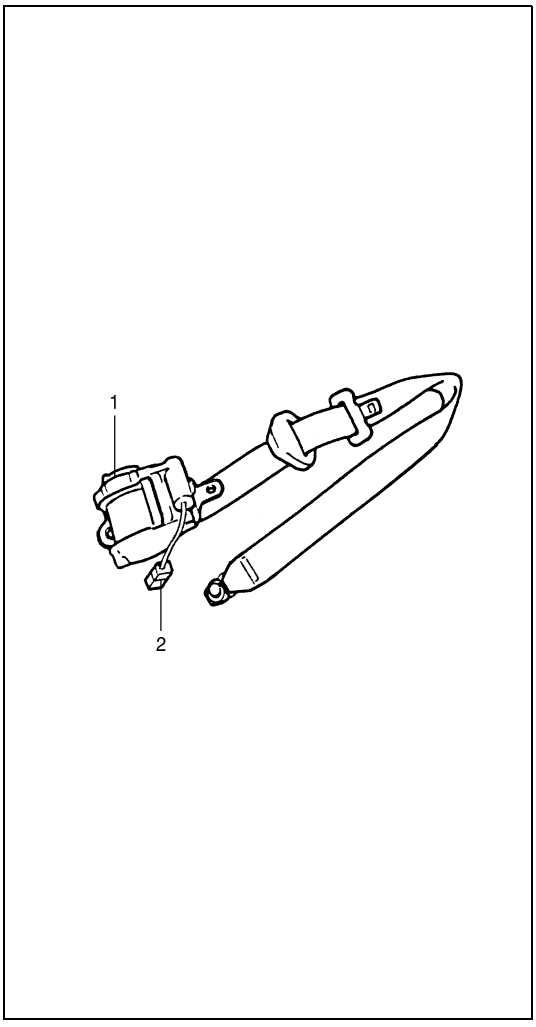

Seat belts and attaching parts can affect the vital components and systems of a vehicle.
Therefore, they should be inspected carefully and replaced with genuine parts only.

- Seat belt
  Its webbing or strap should be free from damage.
- Retractor assembly
  It should lock webbing when pulled quickly.
  The front seat belt retractor assembly (1) should pass the above inspection and should lock webbing even when tilted (approx. 15°) toward the fore and aft or right and left directions.
  Check retractor assembly (1) with seat belt pretensioner appearance visually for following symptoms and if any one of them is applicable, replace it with a new one as an assembly.
- Pretensioner has activated.
- There is a crack in seat belt pretensioner (retractor assembly).
- Wire harness or connector (2) is damaged.
- Seat belt pretensioner (retractor assembly) is damaged or a strong impact (e.g., dropping) was applied to it.
- Anchor bolt
  Anchor bolts should be torqued to specification.
- Belt latch
  It should be secure when latched.

INSTALLATION

Install in reverse order of removal, noting the following.

- Seat belt anchor bolts should have an unified fine thread (7/16-20 UNF). Under no circumstances should any different sized or metric screw threads be used.

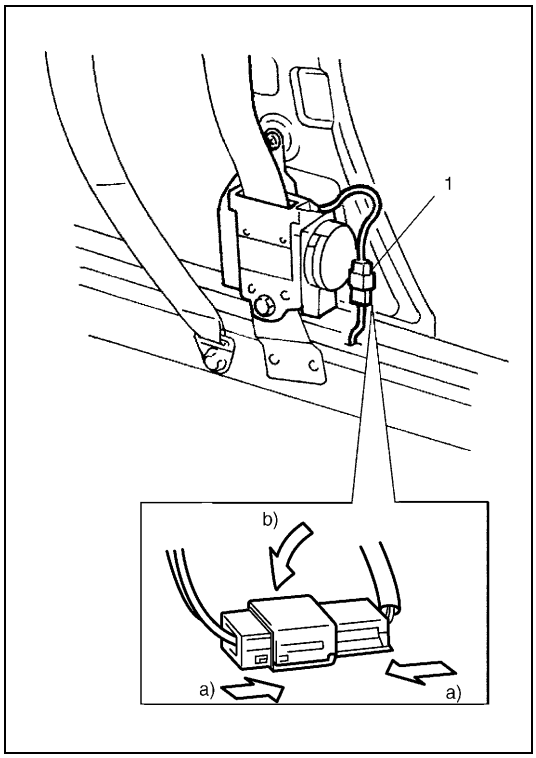

- Connect Yellow connector (1) for seat belt pretensioner securely and fit seat belt pretensioner connector onto body.

a) Connect connector
b) Lock connector with lock lever

- Enable air bag system. Refer to “ENABLING AIR BAG SYSTEM” under “SERVICE PRECAUTIONS” in Section 10B.

REAR SEAT BELT

WARNING:
Be sure to read "SERVICE PRECAUTIONS" before starting to work and observe every precaution during work.

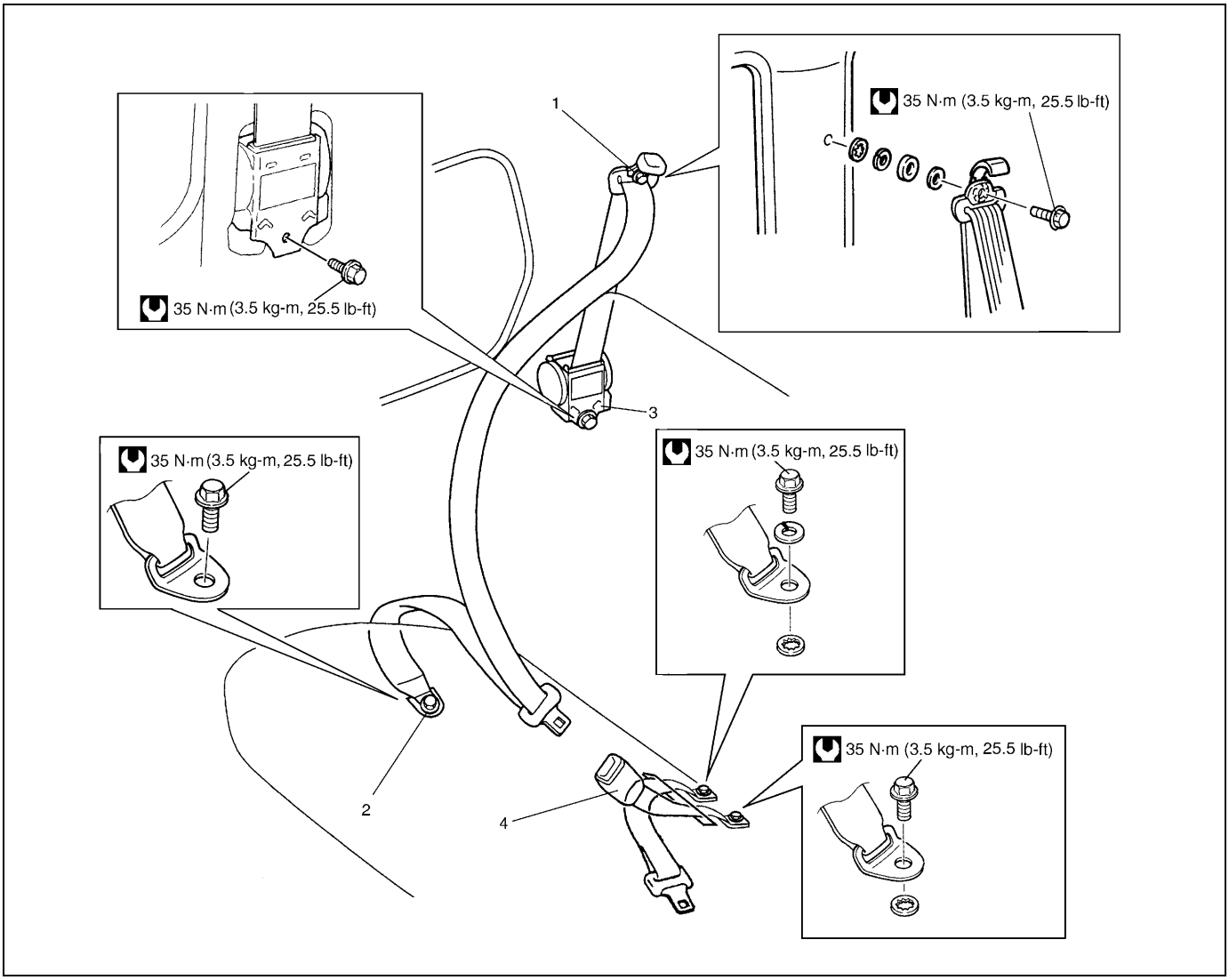

1. Upper anchor	4. Buckle
2. Lower anchor	Tightening torque
3. Retractor assembly	

REMOVAL

Remove rear seat belts as shown in figure.

INSPECTION

Check the rear seat belt in the same way as "INSPECTION" of "FRONT SEAT BELT".

INSTALLATION

Install the rear seat belt observing the same precautions as "INSTALLATION" of "FRONT SEAT BELT".

SECTION 10B

AIR BAG SYSTEM

WARNING:

- **Service on or around the air bag system components or wiring must be performed only by an authorized SUZUKI dealer. Please observe all WARNINGS and "Service Precautions" under "On-Vehicle Service" in this section before performing service on or around the air bag system components or wiring. Failure to follow WARNINGS could result in unintended activation of the system or could render the system inoperative. Either of these two conditions may result in severe injury.**
- **The procedures in this section must be followed in the order listed to disable the air bag system temporarily and prevent false diagnostic trouble codes from setting. Failure to follow procedures could result in possible activation of the air bag system, personal injury or otherwise unneeded air bag system repairs.**

CAUTION:

When fasteners are removed, always reinstall them at the same location from which they were removed. If a fastener needs to be replaced, use the correct part number fastener for that application. If the correct part number fastener is not available, a fastener of equal size and strength (or stronger) may be used. Fasteners that are not reused, and those requiring thread-locking compound, will be called out. The correct torque value must be used when installing fasteners that require it. If the above conditions are not followed, parts or system damage could result.

CONTENTS

GENERAL DESCRIPTION 10B-3
SYSTEM COMPONENTS AND WIRING LOCATION VIEW AND CONNECTORS 10B-4
SYSTEM WIRING DIAGRAM 10B-5
DIAGNOSIS 10B-6
DIAGNOSTIC TROUBLE CODE (DTC) 10B-6
USE OF SPECIAL TOOL 10B-6
INTERMITTENTS AND POOR CONNECTIONS 10B-8
AIR BAG DIAGNOSTIC SYSTEM CHECK 10B-9
AIR BAG DIAGNOSTIC SYSTEM CHECK FLOW TABLE 10B-10
DTC CHECK 10B-11
DTC CLEARANCE 10B-12
DTC TABLE 10B-13
TABLE A - "AIR BAG" WARNING LAMP COMES ON STEADY 10B-15
TABLE B - "AIR BAG" WARNING LAMP DOES NOT COME ON 10B-15
TABLE C - "AIR BAG" WARNING LAMP FLASHES 10B-15
TABLE D - "AIR BAG" WARNING LAMP CANNOT INDICATE FLASHING PATTERN OF DTC 10B-15
TABLE E - SDM CANNOT COMMUNICATE THROUGH THE SERIAL DATA CIRCUIT 10B-21
DTC B1015 - PASSENGER AIR BAG INITIATOR CIRCUIT RESISTANCE HIGH 10B-23
DTC B1016 - PASSENGER AIR BAG INITIATOR CIRCUIT RESISTANCE LOW 10B-23
DTC B1018 - PASSENGER AIR BAG INITIATOR CIRCUIT SHORT TO GROUND 10B-23
DTC B1019 - PASSENGER AIR BAG INITIATOR CIRCUIT SHORT TO POWER CIRCUIT 10B-23
DTC B1021 – DRIVER AIR BAG INITIATOR CIRCUIT RESISTANCE HIGH 10B-29
DTC B1022 – DRIVER AIR BAG INITIATOR CIRCUIT RESISTANCE LOW 10B-29
DTC B1024 – DRIVER AIR BAG INITIATOR CIRCUIT SHORT TO GROUND 10B-29

DTC B1025 – DRIVER AIR BAG INITIATOR CIRCUIT SHORT TO POWER CIRCUIT 10B-29
DTC B1032 – POWER SOURCE VOLTAGE LOW 10B-36
DTC B1041 – DRIVER PRETENSIONER INITIATOR CIRCUIT RESISTANCE HIGH 10B-38
DTC B1042 – DRIVER PRETENSIONER INITIATOR CIRCUIT RESISTANCE LOW 10B-38
DTC B1043 – DRIVER PRETENSIONER INITIATOR CIRCUIT SHORT TO GROUND 10B-38
DTC B1044 – DRIVER PRETENSIONER INITIATOR CIRCUIT SHORT TO POWER CIRCUIT 10B-38
DTC B1045 – PASSENGER PRETENSIONER INITIATOR CIRCUIT RESISTANCE HIGH 10B-38
DTC B1046 – PASSENGER PRETENSIONER INITIATOR CIRCUIT RESISTANCE LOW 10B-38
DTC B1047 – PASSENGER PRETENSIONER INITIATOR CIRCUIT SHORT TO GROUND 10B-38
DTC B1048 – PASSENGER PRETENSIONER INITIATOR CIRCUIT SHORT TO POWER CIRCUIT 10B-38
DTC B1051 – FRONTAL CRASH DETECTED (SYSTEM ACTIVATION COMMAND OUTPUTTED) 10B-44
DTC B1071 - INTERNAL SDM FAULT 10B-45
DTC B1013 – SYSTEM SPECIFICATIONS DIFFERENT FROM SDM SPECIFICATIONS 10B-45
ON-VEHICLE SERVICE 10B-46
SERVICE PRECAUTIONS 10B-46
SERVICE AND DIAGNOSIS 10B-46
DISABLING AIR BAG SYSTEM 10B-47
ENABLING AIR BAG SYSTEM 10B-47
HANDLING AND STORAGE 10B-48
REPAIRS AND INSPECTIONS REQUIRED AFTER AN ACCIDENT 10B-53
ACCIDENT WITH DEPLOYMENT/ ACTIVATION - COMPONENT REPLACEMENT 10B-53
ACCIDENT WITH OR WITHOUT DEPLOYMENT/ACTIVATION - COMPONENT INSPECTIONS 10B-53
SDM 10B-56
DRIVER AIR BAG (INFLATOR) MODULE 10B-59
CONTACT COIL AND COMBINATION SWITCH ASSEMBLY 10B-59
SEAT BELT PRETENSIONER (IF EQUIPPED) 10B-59
AIR BAG (INFLATOR) MODULE AND SEAT BELT PRETENSIONER DISPOSAL 10B-60
DEPLOYMENT/ACTIVATION OUTSIDE VEHICLE 10B-61
DEPLOYMENT/ACTIVATION INSIDE VEHICLE 10B-67
DEPLOYED AIR BAG (INFLATOR) MODULE AND ACTIVATED SEAT BELT PRETENSIONER DISPOSAL 10B-70
SPECIAL TOOL 10B-71

GENERAL DESCRIPTION

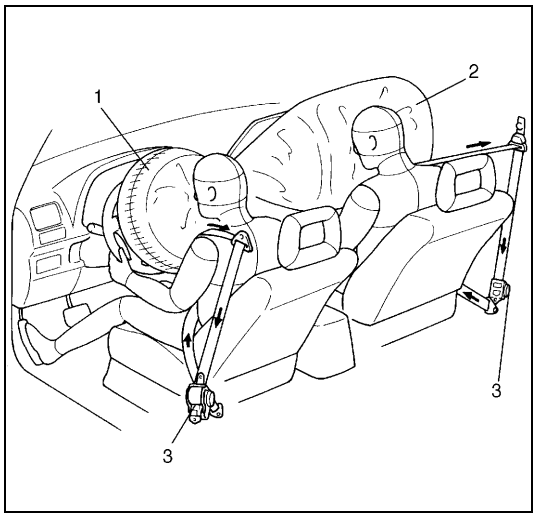

With the air bag system which includes air bags for both the driver's and passenger's sides as well as the seat belt pretensioners (if equipped), the sag of the seat belt is taken up (for seat belt with pretensioner), the driver air bag (inflator) module is deployed from the center of the steering column and the passenger air bag (inflator) module from the top of the instrument panel in front of the front passenger seat in occurrence of a front collision with an impact larger than a certain set value to supplement protection offered by the driver and front passenger seat belts.

1. Driver side air bag
2. Passenger side air bag
3. Seat belt pretensioner (if equipped)

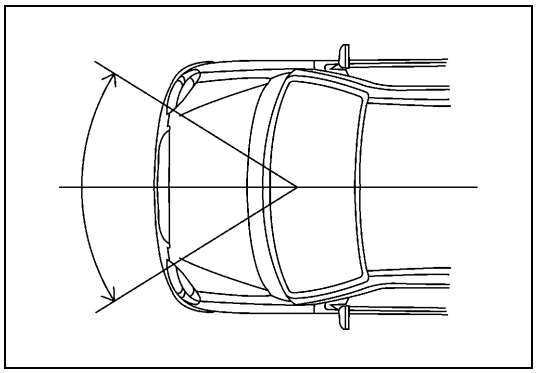

The air bag system is designed to activate only in severe frontal collisions. It is not designed to activate in rear impacts, side impacts, rollovers, or minor frontal collisions, since it would offer no protection in those types of accidents.

SYSTEM COMPONENTS AND WIRING LOCATION VIEW AND CONNECTORS

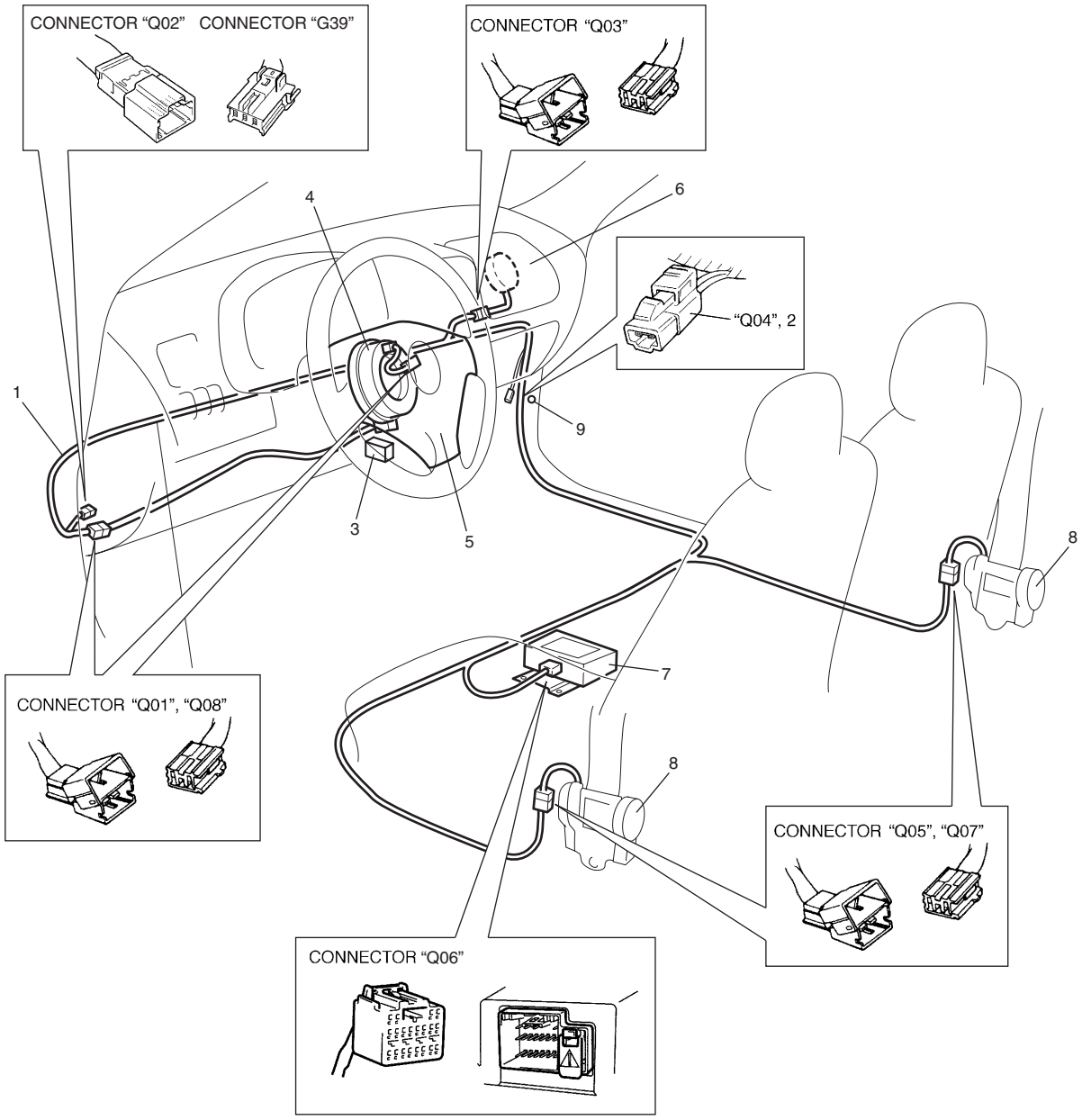

1. Air bag harness	6. Passenger air bag (inflator) module
2. “Air bag” monitor coupler	7. SDM
3. DLC	8. Seat belt pretensioner (retractor assembly) (if equipped)
4. Contact coil assembly	9. Ground for air bag system
5. Driver air bag (inflator) module	

SYSTEM WIRING DIAGRAM

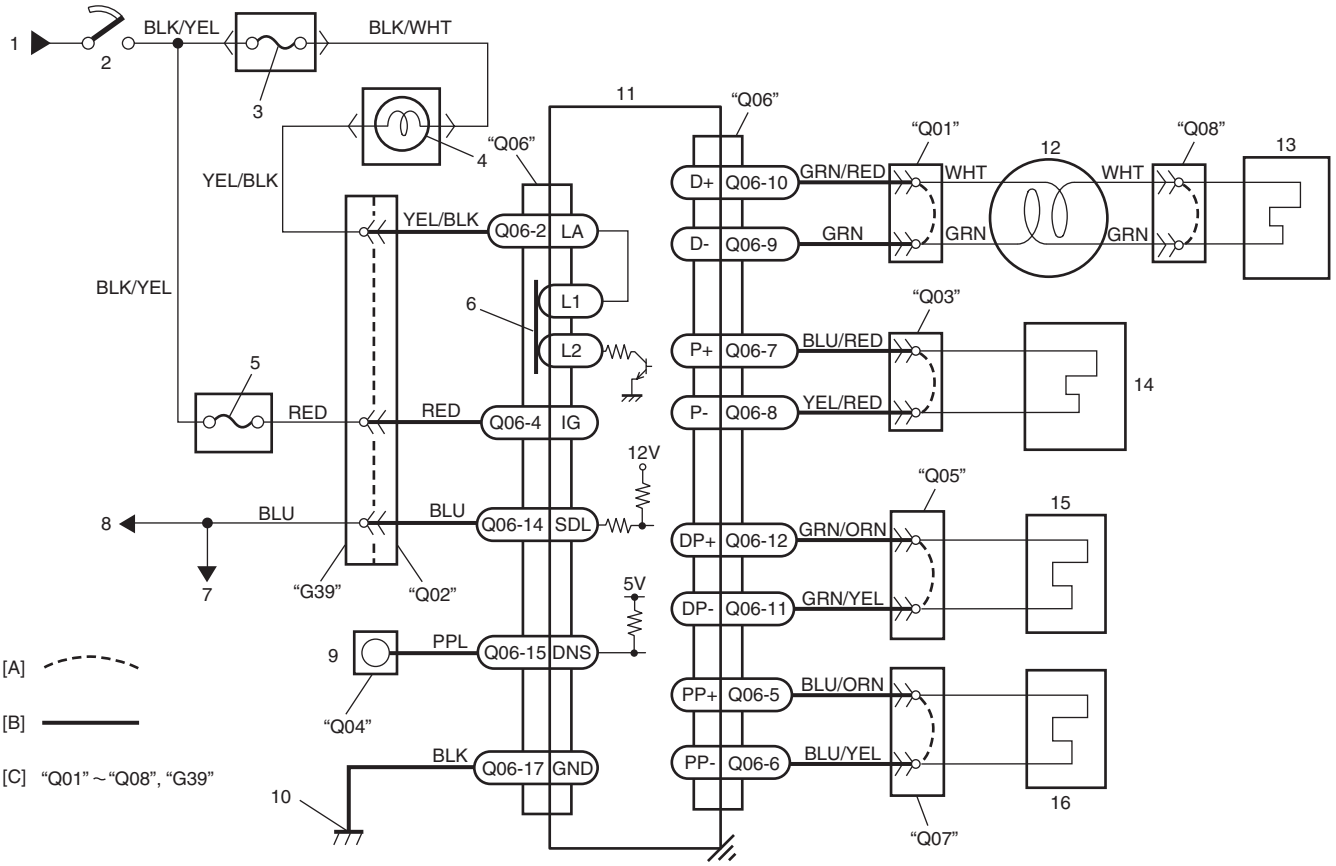

[A]: Shorting bar	5. "AIR BAG" fuse	12. Contact coil assembly
[B]: Air bag harness	6. Connection detection pin	13. Driver air bag (inflator) module
[C]: Connector	7. To ECM, TCM (if equipped) and ABS control module (if equipped)	14. Passenger air bag (inflator) module
1. From main fuse	8. To data link connector (DLC)	15. Driver seat belt pretensioner (if equipped)
2. Ignition switch	9. "AIR BAG" monitor coupler	16. Passenger seat belt pretensioner (if equipped)
3. "IG METER" fuse	10. Ground for air bag system	
4. "AIR BAG" warning lamp in combination meter	11. SDM	

TERMINAL ARRANGEMENT OF SDM (VIEWED FROM HARNESS SIDE)

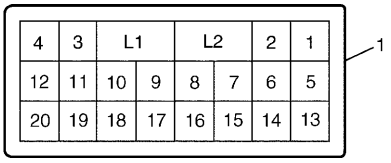

1. CONNECTOR "Q06" (SDM CONNECTOR)

CONNECTOR “Q06” (SDM connector)

TERMINAL	CIRCUIT		TERMINAL	CIRCUIT	
Q06-1	–		Q06-11	Driver pretensioner (if equipped)	Low
Q06-2	“AIR BAG” warning lamp		Q06-12		High
Q06-3	–		Q06-13	–	
Q06-4	Ignition switch (power source)		Q06-14	Data link connector (DLC)	
Q06-5	Passenger pretensioner (if equipped)	High	Q06-15	Diagnosis switch	
Q06-6		Low	Q06-16	–	
Q06-7	Passenger air bag (inflator) module	High	Q06-17	Ground	
Q06-8		Low	Q06-18	–	
Q06-9	Driver air bag (inflator) module	Low	Q06-19	–	
Q06-10		High	Q06-20	–	

DIAGNOSIS

WARNING:

To avoid deployment when troubleshooting the air bag system, do not use electrical test equipment such as a battery powered or AC powered voltmeter, ohmmeter, etc., or any type of electrical equipment other than that specified in this manual. Do not use a non-powered probe type tester. Instructions in this manual must be followed carefully, otherwise personal injury may result.

DIAGNOSTIC TROUBLE CODE (DTC)

The AIR BAG DIAGNOSTIC SYSTEM CHECK must always be the starting point of any air bag system diagnosis. The AIR BAG DIAGNOSTIC SYSTEM CHECK checks for proper “AIR BAG” warning lamp operation and checks for air bag diagnostic trouble codes (DTCs) using on-board diagnosis function or SUZUKI scan tool.

USE OF SPECIAL TOOL

WARNING:

To avoid deployment when troubleshooting the air bag system, do not use electrical test equipment such as a battery powered or AC powered voltmeter, ohmmeter, etc., or any type of electrical equipment other than that specified in this manual. Do not use a non-powered probe type tester. Instructions in this manual must be followed carefully, otherwise personal injury may result.

You should be familiar with the tools listed in this section under the heading SPECIAL TOOLS. You should be able to measure voltage and resistance. You should be familiar with proper use of a scan tool such as Air Bag Driver/Passenger Load Tool, Connector Test Adapter Kit and the Digital Multimeter.

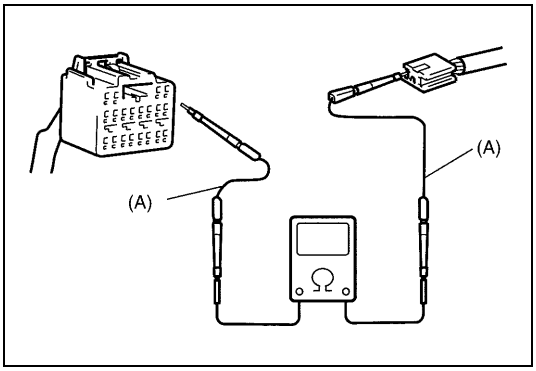

Special tool

(A) : 09932-76010 (Connector Test Adapter Kit)

This must be used whenever a diagnostic procedure requests checking or probing a terminal.

Using the appropriate adapter in the special tool will ensure that no damage to the terminal will occur from the multimeter probe, such as spreading or bending.

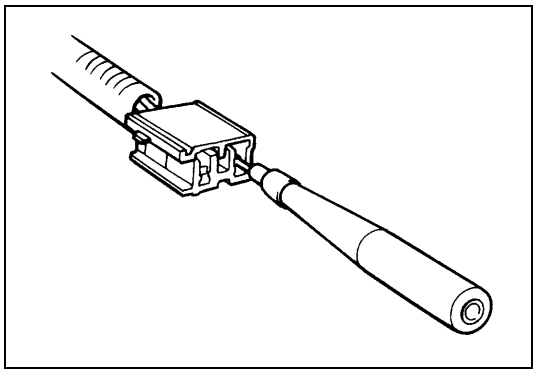

The adapter will also give an idea of whether contact tension is sufficient, helping to find an open or intermittent open due to poor terminal contact.

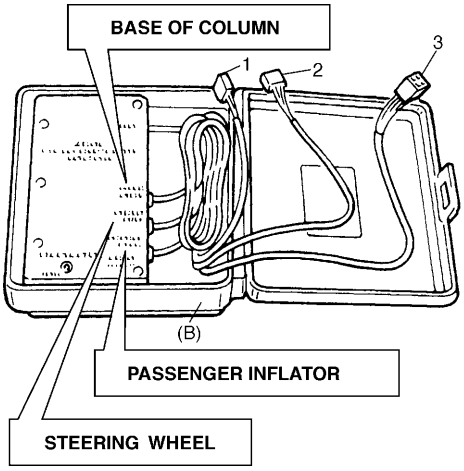

Special tool
(B) : 09932-75010 (Air Bag Driver/Passenger Load Tool)

This tool is used only when called for in this section. It is used as a diagnostic aid and safety device to prevent inadvertent air bag (inflator) module deployment.
The load tool has three connectors attached to its case which are electrically functional and serve as resistive load substitutions.
No more than two connectors are used at any time.

One of connectors ("STEERING WHEEL") is used to substitute the load of followings.

- driver air bag (inflator) module when it is connected at the top of the column to the contact coil assembly.
- passenger air bag (inflator) module when it is connected to the air bag harness connector for passenger air bag (inflator) module.

Another connector ("BASE OF COLUMN") is used to substitute the load of the driver air bag (inflator) module and the contact coil assembly when it is connected at the base of the column to the air bag wire harness.
The third connector ("PASSENGER INFLATOR") is not used.

By substituting the resistance of the load tool when called for, a determination can be made as to whether an inflator circuit component is causing system malfunction and which component is causing the malfunction.
The load tool should be used only when specifically called for in the diagnostic procedures.

1. Connector for contact coil and driver air bag (inflator) module (Located near the base of the steering column)
2. Connector for driver, passenger air bag (inflator) module and driver and passenger seat belt pretensioners
3. Not used

INTERMITTENTS AND POOR CONNECTIONS

Most intermittents are caused by faulty electrical connections or wiring. When a check for proper connection is requested in a diagnostic flow table, perform careful check of suspect circuits for:

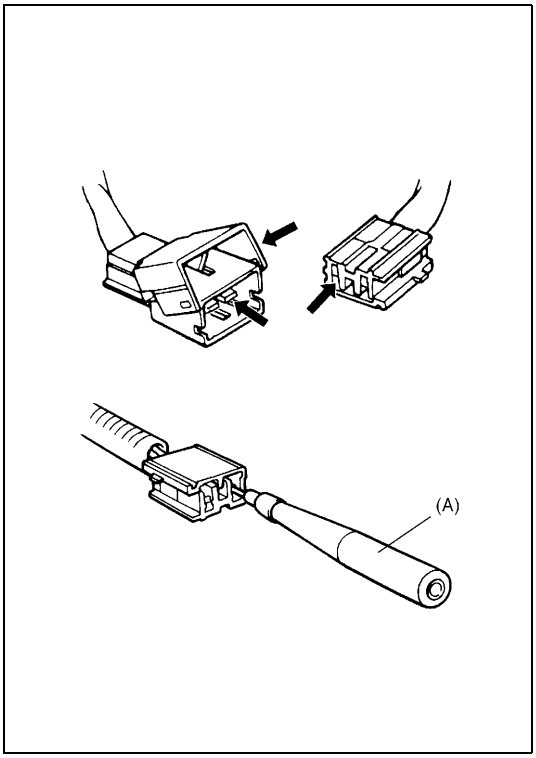

- Poor mating of connector halves, or terminals not fully seated in the connector body (backed out).
- Dirt or corrosion on the terminals. The terminals must be clean and free of any foreign material which could impede proper terminal contact.
  However, cleaning the terminal with a sand paper or the like is prohibited.
- Damaged connector body, exposing the terminals to moisture and dirt, as well as not maintaining proper terminal orientation with the component or mating connector.
- Improperly formed or damaged terminals.
  Check each connector terminal in problem circuits carefully to ensure good contact tension by using the corresponding mating terminal included in the connector test adapter kit (special tool).
  If contact tension is not enough, reform it to increase contact tension or replace.

Special tool
(A) : 09932-76010 (Connector Test Adapter Kit)

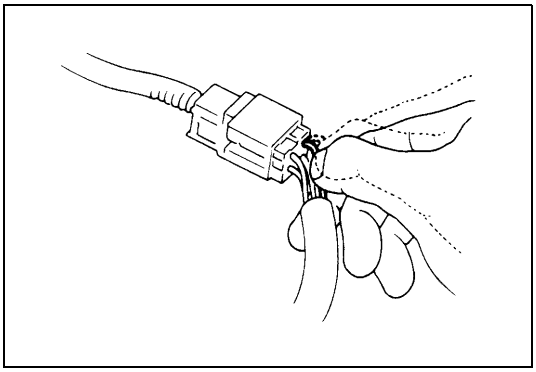

- Poor terminal-to-wire connection.
  Check each wire harness in problem circuits for poor connection by shaking it by hand lightly. If any abnormal condition is found, change the wire harness assembly or component parts with new ones.

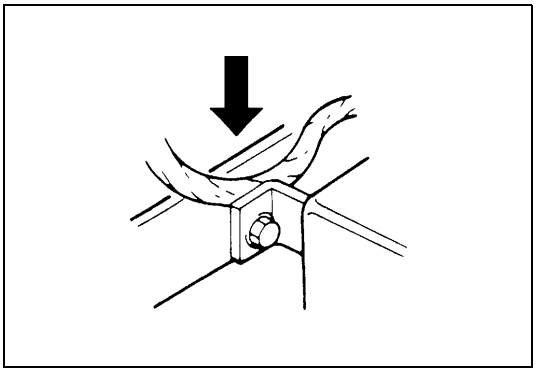

- Wire insulation which is rubbed through, causing an intermittent short as the bare area touches other wiring or parts of the vehicle.
- Wire broken inside the insulation. This condition could cause a continuity check to show a good circuit, but if only 1 or 2 strands of a multi-strand-type wire are intact, resistance could be far too high.

If any abnormality is found, repair or replace as a wire harness assembly.

AIR BAG DIAGNOSTIC SYSTEM CHECK

WARNING:

To avoid deployment when troubleshooting the air bag system, do not use electrical test equipment such as a battery powered or AC powered voltmeter, ohmmeter, etc., or any type of electrical equipment other than that specified in this manual. Do not use a non-powered probe type tester. Instructions in this manual must be followed carefully, otherwise personal injury may result.

CAUTION:

The order in which diagnostic trouble codes are diagnosed is very important. Failure to diagnose the diagnostic trouble codes in the order specified may result in extended diagnostic time, incorrect diagnosis and incorrect parts replacement.

The diagnostic procedures used in this section are designed to find and repair air bag system malfunctions. To get the best results, it is important to use the diagnostic flow tables and follow the sequence listed below.

1) Perform the AIR BAG DIAGNOSTIC SYSTEM CHECK FLOW TABLE.
   (The AIR BAG DIAGNOSTIC SYSTEM CHECK FLOW TABLE must be the starting point of any air bag system diagnosis.
   The AIR BAG DIAGNOSTIC SYSTEM CHECK FLOW TABLE checks for proper “AIR BAG” warning lamp operation through “AIR BAG” warning lamp and whether air bag diagnostic trouble codes exist.)
2) Refer to the proper diagnostic table as directed by the AIR BAG DIAGNOSTIC SYSTEM CHECK FLOW TABLE.
   (The AIR BAG DIAGNOSTIC SYSTEM CHECK FLOW TABLE will lead you to the correct table to diagnose any air bag system malfunctions. Bypassing these procedures may result in extended diagnostic time, incorrect diagnosis and incorrect parts replacement.)
3) Repeat the AIR BAG DIAGNOSTIC SYSTEM CHECK FLOW TABLE after any repair or diagnostic procedures have been performed.
   (Performing the AIR BAG DIAGNOSTIC SYSTEM CHECK FLOW TABLE after all repair or diagnostic procedures will ensure that the repair has been made correctly and that no other malfunctions exist.)

FLOW TABLE TEST DESCRIPTION

STEP 1 : Check that “AIR BAG” warning lamp lights.
STEP 2 : Check that “AIR BAG” warning lamp lights.
STEP 3 : Check diagnosis switch circuit.
STEP 4 : Check that “AIR BAG” warning lamp flashes 6 times after ignition switch is turned ON.
STEP 6 : Check that history codes are in SDM memory. (using SUZUKI scan tool)
STEP 7 : Check that history codes are in SDM memory. (using monitor coupler)
STEP 9 : Check that current code is in SDM memory. (using SUZUKI scan tool)
STEP 10 : Check that current code is in SDM memory. (using monitor coupler)

AIR BAG DIAGNOSTIC SYSTEM CHECK FLOW TABLE

Step	Action	Yes	No
1	1) Make sure that battery voltage is about 11V or higher. 2) Note “AIR BAG” warning lamp as ignition switch is tuned ON. Does “AIR BAG” warning lamp come ON when ignition switch is tuned ON?	Go to step 2.	Proceed to Diagnostic Flow Table B (“AIR BAG” warning lamp circuit check).
2	Does “AIR BAG” warning lamp come ON steady?	Proceed to Diagnostic Flow Table A (“AIR BAG” warning lamp circuit check).	Go to step 3.
3	Does “AIR BAG” warning lamp keep flashing (indicating DTC) when ignition switch is ON?	Proceed to Diagnostic Flow Table C (“AIR BAG” warning lamp circuit check).	Go to step 4.
4	Does “AIR BAG” warning lamp turn OFF, after flashing 6 times?	Go to step 5.	Go to step 8.
5	Do you have SUZUKI scan tool?	Go to step 6.	Go to step 7.
6	1) Check DTC using SUZUKI scan tool. Refer to DTC CHECK. Is “NO CODES” displayed on SUZUKI scan tool?	Air bag system is in good condition.	An intermittent trouble has occurred at some place. Check the connector harness, etc. related to the sensed DTC. Refer to INTERMITTENT AND POOR CONNECTIONS in this section. Then clear DTC (Refer to DTC CLEARANCE.) and repeat this table.
7	1) Check DTC using monitor coupler. Refer to DTC CHECK. Is flashing pattern no. 12 indicated on “AIR BAG” warning lamp?	Air bag system is in good condition.	An intermittent trouble has occurred at some place. Check the connector harness, etc. related to the sensed DTC. Refer to INTERMITTENT AND POOR CONNECTIONS in this section. Then clear DTC (Refer to DTC CLEARANCE.) and repeat this table.
8	Do you have SUZUKI scan tool?	Go to step 9.	Go to step 10.
9	1) Check DTC using SUZUKI scan tool. Refer to DTC CHECK. Is “NO CODES” displayed on SUZUKI scan tool?	Substitute a known-good SDM and recheck.	Check and repair according to Flow Table corresponding to that DTC.
10	1) Check DTC using monitor coupler. Refer to DTC CHECK. Is flashing pattern no. 12 indicated on “AIR BAG” warning lamp?	Substitute a known-good SDM and recheck.	Check and repair according to Flow Table corresponding to that DTC.

DTC CHECK

Using SUZUKI Scan Tool

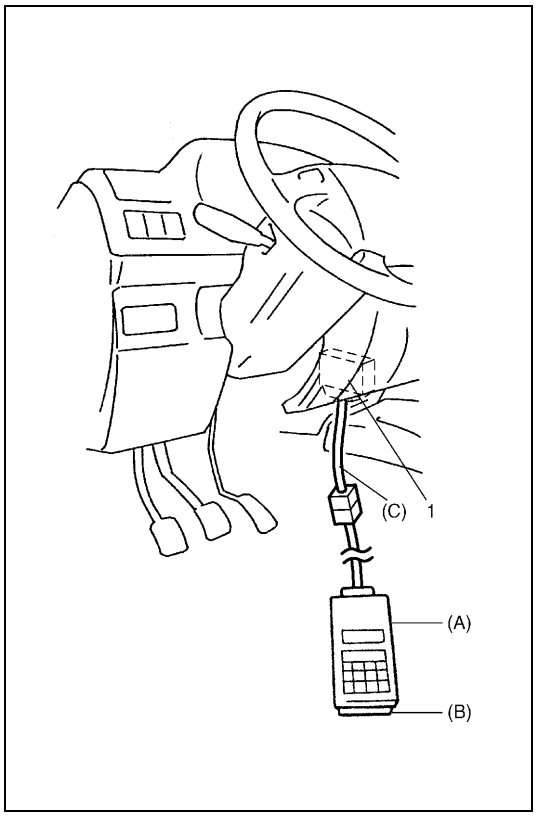

1) Turn ignition switch to OFF position.
2) After setting cartridge to SUZUKI scan tool, connect it to data link connector (DLC) located on underside of instrument panel at driver's seat side.

Special tool
(A) : 09931-76011 (SUZUKI scan tool)
(B) : Mass storage cartridge
(C) : 09931-76030 (16/14 pin DLC cable)

3) Turn ignition switch to ON position.
4) Read DTC according to instructions displayed on SUZUKI scan tool and print it or write it down. Refer to SUZUKI scan tool operator's manual for further details.
   If communication between scan tool and SDM is not possible, proceed to Diagnostic Flow Table E (Serial data check circuit).
5) After completing the check, turn ignition switch to OFF position and disconnect SUZUKI scan tool from data link connector (DLC).

1. Data link connector (DLC)

Not Using SUZUKI Scan Tool

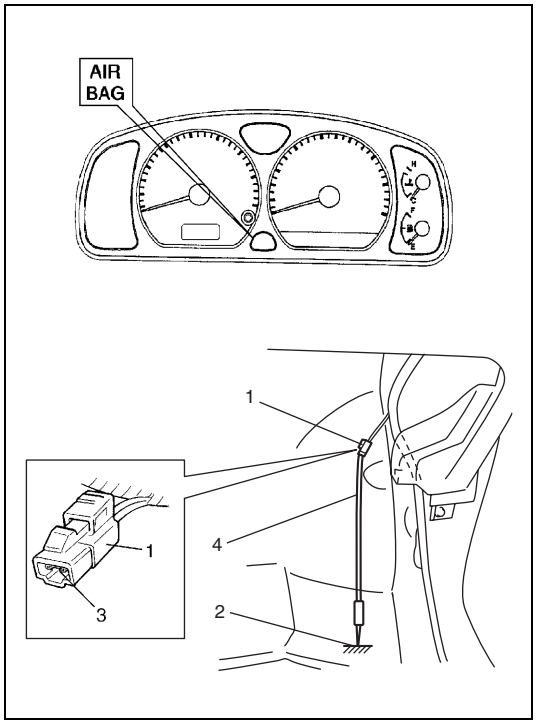

1) Check that malfunction indicator lamp ("AIR BAG" warning lamp) comes ON when ignition switch is turned to ON position.
   If it does not come "ON", proceed to Diagnostic Flow Table B ("AIR BAG" warning lamp circuit).
2) Using service wire, ground diagnosis switch terminal in monitor coupler.
3) Read DTC from flashing pattern of malfunction indicator lamp ("AIR BAG" warning lamp). (Refer to DTC TABLE.)
   If lamp does not indicate DTC, proceed to Diagnostic Flow Table D (Diagnosis switch terminal circuit check).
4) After completing the check, turn ignition switch to OFF position and disconnect service wire from "AIR BAG" monitor coupler.

1. "AIR BAG" monitor coupler
2. Body ground
3. Diagnosis switch terminal
4. Service wire

EXAMPLE : When driver air bag initiator circuit resistance high (DTC B1021) is set

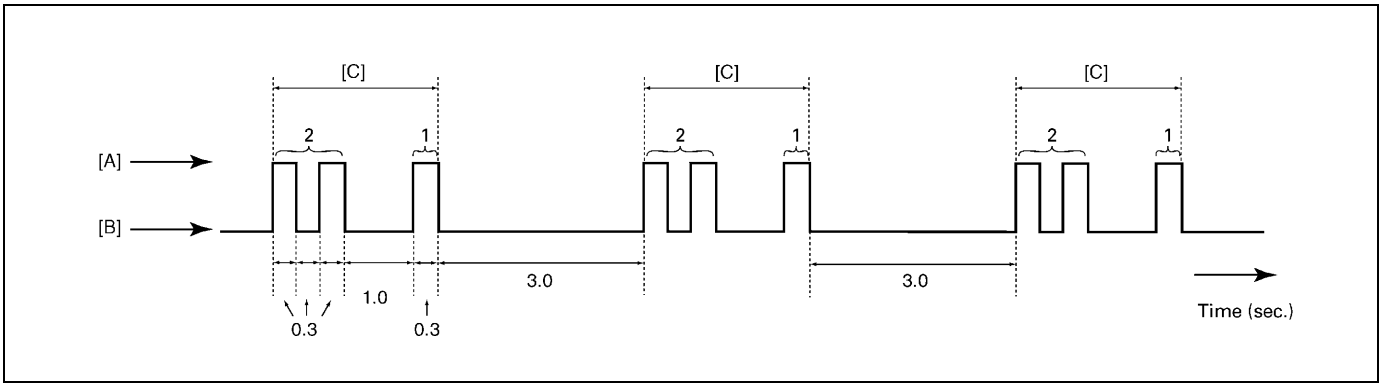

[A]: "AIR BAG" warning lamp is turned ON
[B]: "AIR BAG" warning lamp is turned OFF
[C]: Code No.21

DTC CLEARANCE

Using SUZUKI Scan Tool

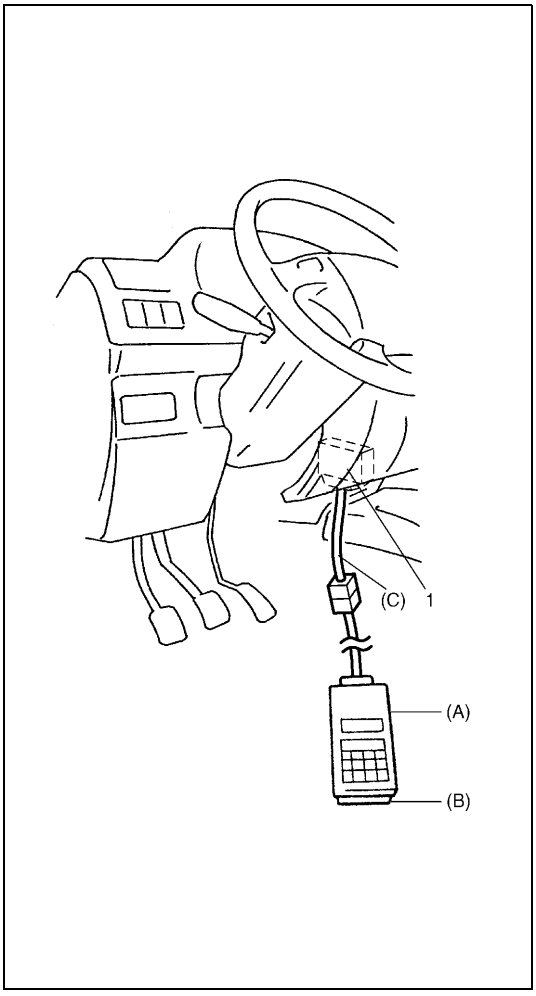

1) Turn ignition switch to OFF position.
2) Connect SUZUKI scan tool to data link connector (DLC) in the same manner as when making this connection for DTC check.

Special tool
(A) : 09931-76011 (SUZUKI scan tool)
(B) : Mass storage cartridge
(C) : 09931-76030 (16/14 pin DLC cable)

3) Turn ignition switch to ON position.
4) Erase DTC according to instructions displayed on SUZUKI scan tool.
   Refer to SUZUKI scan tool operator's manual for further details.
5) After completing the check, turn ignition switch to OFF position and disconnect SUZUKI scan tool from DLC.
6) Perform DTC CHECK and confirm that normal DTC (NO CODES) is displayed and not malfunction DTC.

NOTE:

If DTC B1051 or DTC B1071 is stored in SDM, it is not possible to clear DTC.

1. Data link connector (DLC)

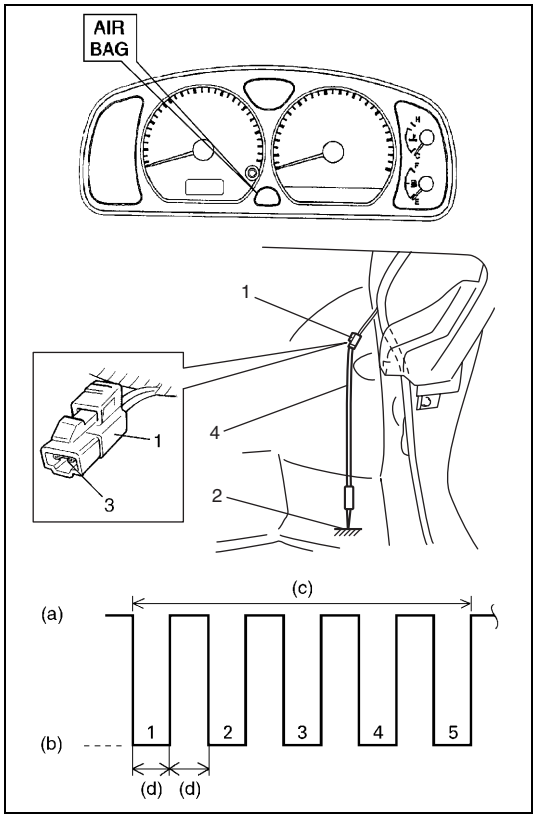

Not Using SUZUKI Scan Tool

1) Turn ignition switch to ON position and wait about 6 seconds or more.
2) Using service wire, repeat shorting and opening between diagnosis switch terminal on “AIR BAG” monitor coupler and body ground 5 times at about 1 second intervals.
3) Perform DTC CHECK and confirm that normal DTC (DTC 12) is displayed and not malfunction DTC.

NOTE:

If DTC B1051 or DTC B1071 is stored in SDM, it is not possible to clear DTC.

1. “AIR BAG” monitor coupler	(a) Open
2. Body ground	(b) Short
3. Diagnosis switch terminal	(c) About 10 seconds
4. Service wire	(d) 1 sec.

DTC TABLE

DTC	“AIR BAG” warning lamp flashing pattern		Diagnosis		
	NO.	MODE			
–	12		Normal		–
B1015	15		Passenger air bag circuit	Resistance high	Diagnose trouble according to diagnostic flow table corresponding to each code No.
B1016	16			Resistance low	
B1018	18			Short to ground	
B1019	19			Short to power circuit	
B1021	21		Driver air bag circuit	Resistance high	
B1022	22			Resistance low	
B1024	24			Short to ground	
B1025	25			Short to power circuit	
B1032	32		Power source voltage	Too low	

DTC	"AIR BAG" warning lamp flashing pattern		Diagnosis		
	NO.	MODE			
B1041	41		Driver pretensioner circuit	Resistance high	Diagnose trouble according to diagnostic flow table corresponding to each code No.
B1042	42			Resistance low	
B1043	43	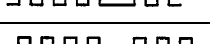		Short to ground	
B1044	44	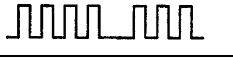		Short to power circuit	
B1045	45		Passenger pretensioner circuit	Resistance high	
B1046	46			Resistance low	
B1047	47	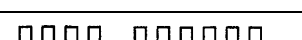		Short to ground	
B1048	48	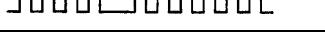		Short to power circuit	
B1051	51		SDM	Frontal crash detected	
B1071	71			Internal fault	
B1013	13			Specifications different between air bag system and SDM	

NOTE:

- **When 2 or more codes are indicated, the lowest numbered code will appear first.**
- **Current DTC and history DTC can be identified by lighting and flashing of "AIR BAG" warning lamp as follows. However, if a multiple number of DTC's are set an even one of them is a current DTC, "AIR BAG" warning lamp remains on after ignition switch is turned ON. Therefore, it is not possible to identify any of them as to whether it is a current one or a history one. (But use of SUZUKI scan tool will make identification possible.)**

	Current DTC is set. (Abnormality exists at present.)	**History DTC is set only. (Faulty condition occurred once in the past but normal condition is restored at present.)**
"AIR BAG" warning lamp after ignition switch ON	**Flashing 6 times and turns on.**	**Flashing 6 times and turns off.**
"AIR BAG" warning lamp when grounding diagnosis switch	**Current DTC is displayed.**	**History DTC is displayed.**

TABLE A - “AIR BAG” WARNING LAMP COMES ON STEADY

TABLE B - “AIR BAG” WARNING LAMP DOES NOT COME ON

TABLE C - “AIR BAG” WARNING LAMP FLASHES

TABLE D - “AIR BAG” WARNING LAMP CANNOT INDICATE FLASHING PATTERN OF DTC

WIRING DIAGRAM

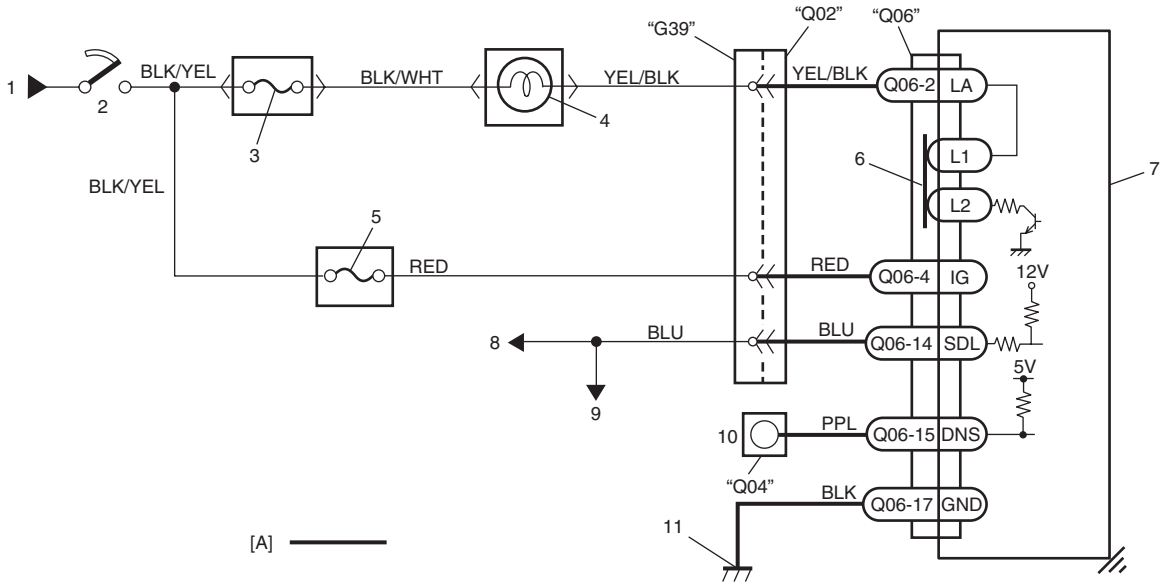

1. From main fuse	5. “AIR BAG” fuse	9. To ECM, TCM (if equipped) and ABS control module (if equipped)
2. Ignition switch	6. Connection detection pin	10. “AIR BAG” monitor coupler
3. “IG·COIL METER” fuse	7. SDM	11. Ground for air bag system
4. “AIR BAG” warning lamp in combination meter	8. To DLC	[A]: Air bag harness

CAUTION:

- **Be sure to perform AIR BAG DIAGNOSTIC SYSTEM CHECK before starting diagnosis according to flow table.**
- **When measurement of resistance or voltage is required in this table, use a tester along with a correct terminal adapter from special tool (Connector test adapter kit).**
- **When a check for proper connection is required, refer to INTERMITTENT AND POOR CONNECTIONS in this section.**
- **If there is open circuit in the air bag wire harness, connector or terminal is found damaged, replace the wire harness, connector and terminal as an assembly.**

TABLE TEST DESCRIPTION

Table A :

STEP 1 : Check “AIR BAG” fuse.
STEP 2 : Check power source circuit.
STEP 3 : Check “AIR BAG” warning lamp circuit.

Table B :

STEP 1 : Check combination meter power feed circuit.
STEP 2 : Check electrical connection check mechanism in SDM connector.
STEP 3 : Check “AIR BAG” warning lamp circuit.
STEP 4 : Check open in “AIR BAG” warning lamp circuit.
STEP 5 : Check short from “AIR BAG” warning lamp circuit to power circuit.
STEP 6 : Check “AIR BAG” bulb.

Table C and D :

STEP 1 : Check “AIR BAG” monitor coupler.
STEP 2 : Check diagnosis switch circuit for air bag system.

DIAGNOSTIC FLOW TABLE

Table A :

Step	Action	Yes	No
1	1) Ignition switch OFF. 2) Remove and inspect “AIR BAG” fuse. Is fuse good?	Go to step 2.	“RED” wire short to ground. After repair, replace “AIR BAG” fuse.
2	1) Disconnect SDM. 2) Check proper connection to SDM at terminal “Q06-4”. 3) If OK then check voltage between “Q06-4” terminal of SDM connector and body ground with ignition switch ON. Is it 8 V or more?	Go to step 3.	“RED” wire (between “AIR BAG” fuse and SDM connector) open “BLK/YEL” wire (between ignition switch and “AIR BAG” fuse) open or short to ground
3	1) Disconnect 16-pin connector from combination meter. Refer to COMBINATION METER in SECTION 8. 2) Check resistance between “Q06-2” terminal of SDM connector and body ground. Is resistance 10 Ω or more?	Substitute a known-good SDM and recheck.	“YEL/BLK” wire (between combination meter and SDM connector) short to ground

Fig. for STEP 2

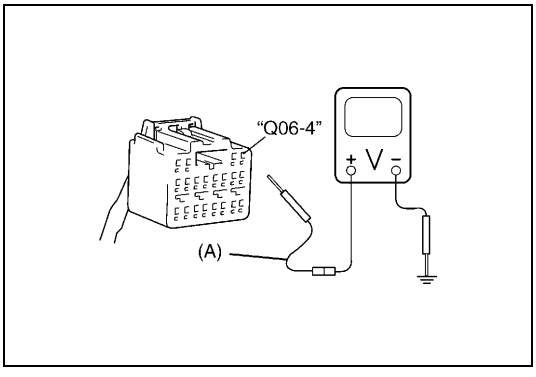

Fig. for STEP 3

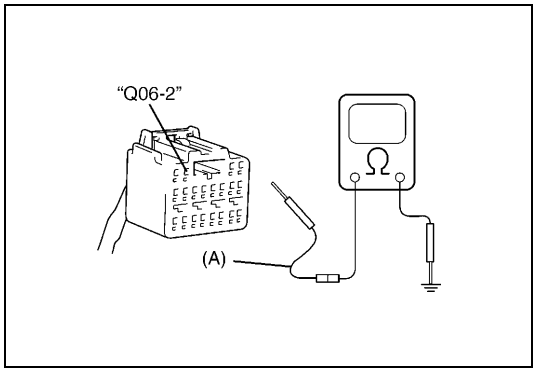

Special tool
(A) : 09932-76010

NOTE:

Upon completion of inspection and repair work, perform following items.

- **Reconnect all air bag system components, ensure all components are properly mounted.**
- **Repeat AIR BAG DIAGNOSTIC SYSTEM CHECK to confirm that the trouble has been corrected.**

Table B :

Step	Action	Yes	No
1	1) Set parking brake. 2) Note combination meter when ignition switch is turned ON. Does the "BRAKE" indicator (warning lamp) come ON?	Go to step 2.	"BLK/WHT" wire, "IG METER" fuse or J/B (between ignition switch and combination meter) open or short to ground
2	1) With ignition switch OFF, disconnect SDM. 2) Check electrical connection check mechanism. Is it in good condition?	Go to step 3.	Repair electrical connection check mechanism.
3	1) Disconnect SDM. 2) Check proper connection to SDM at terminal "Q06-2". 3) If OK then check voltage from "Q06-2" terminal of SDM connector to body ground with ignition switch ON. Is it 8 V or more?	Substitute a known-good SDM and recheck.	Go to step 4.
4	1) Remove combination meter. Refer to COMBINATION METER in SECTION 8. 2) Check proper connection to combination meter at "YEL/BLK" terminal for "AIR BAG" warning lamp and to SDM at terminal "Q06-2". 3) If OK then check resistance between "YEL/BLK" wire terminal of combination meter connector (16-pin connector) and "Q06-2" terminal of SDM connector. Is resistance 1 Ω or less?	Go to step 5.	Repair high resistance or open in "YEL/BLK" wire circuit (between combination meter and SDM).

Step	Action	Yes	No
5	1) Measure voltage from “Q06-2” terminal of SDM connector to body ground with ignition switch ON. Is it 8 V or more?	Repair short from “YEL/BLK” wire circuit (between combination meter and SDM) to power circuit.	Go to step 6.
6	1) Remove and inspect “AIR BAG” bulb. Is bulb good?	Substitute a known-good combination meter and recheck.	Replace bulb.

Fig. for STEP 2

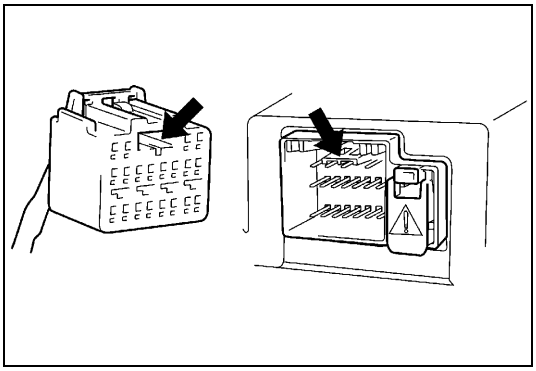

Fig. for STEP 3 and 5

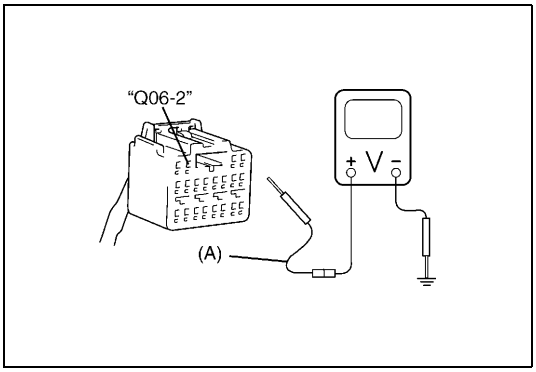

Special tool
(A) : 09932-76010

Fig. for STEP 4

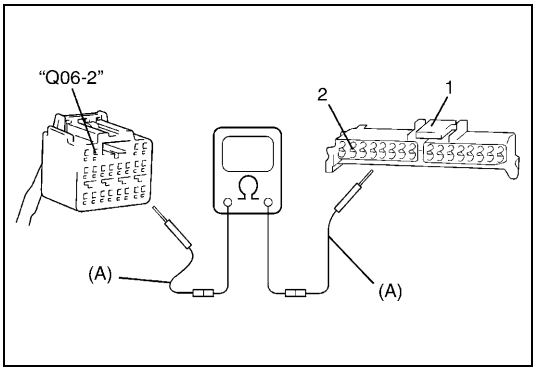

1.	16-pin connector (for combination meter)
2.	“YEL/BLK” wire terminal

Special tool
(A) : 09932-76010

NOTE:

Upon completion of inspection and repair work, perform following items.

- **Reconnect all air bag system components, ensure all components are properly mounted.**
- **Repeat AIR BAG DIAGNOSTIC SYSTEM CHECK to confirm that the trouble has been corrected.**

Table C :

Step	Action	Yes	No
1	1) Check “AIR BAG” monitor coupler. Is it connected diagnosis switch terminal and ground terminal in “AIR BAG” monitor coupler by service wire?	Remove service wire.	Go to step 2.
2	1) With ignition switch OFF, disconnect SDM. 2) Measure resistance between “Q06-15” terminal of SDM connector and body ground. Is resistance 1 Ω or more?	Substitute a known-good SDM and recheck.	Repair short from “PPL” wire circuit to ground.

Fig. for STEP 2

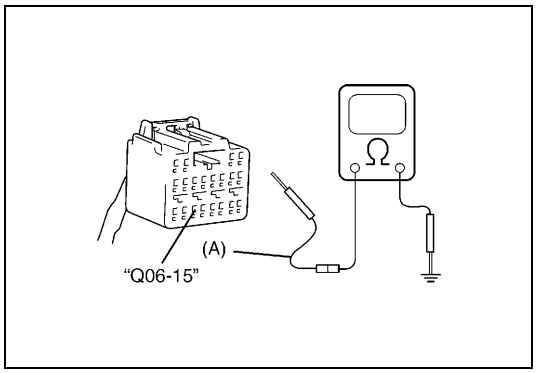

Special tool
(A) : 09932-76010

NOTE:

Upon completion of inspection and repair work, perform following items.

- **Reconnect all air bag system components, ensure all components are properly mounted.**
- **Repeat AIR BAG DIAGNOSTIC SYSTEM CHECK to confirm that the trouble has been corrected.**

Table D :

Step	Action	Yes	No
1	1) Inspect connection between diagnostic switch terminal on “AIR BAG” monitor coupler and body ground by service wire. Is it securely connected between them by service wire?	Go to step 2.	Properly connection diagnostic switch terminal on “AIR BAG” monitor coupler and body ground by service wire.
2	1) Disconnect SDM connector from SDM. 2) Check for proper connection at “PPL” wire (“Q06-15” terminal of SDM connector and “Q04-2” terminal of “AIR BAG” monitor coupler) terminals. 3) If OK then measure resistance between “Q06-15” terminal and “Q04-2” terminal. Is resistance 1 Ω or more?	Check “PPL” wire terminals. If OK then “PPL” wire circuit high resistance or open.	Substitute a known good SDM and recheck

Fig. for STEP 2

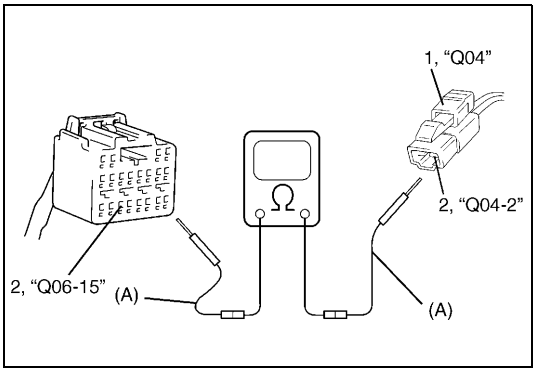

1.	“AIR BAG” monitor coupler
2.	“PPL” wire terminal

Special tool
(A) : 09932-76010

NOTE:

Upon completion of inspection and repair work, perform following items.

- **Reconnect all air bag system components, ensure all components are properly mounted.**
- **Repeat AIR BAG DIAGNOSTIC SYSTEM CHECK to confirm that the trouble has been corrected.**

TABLE E - SDM CANNOT COMMUNICATE THROUGH THE SERIAL DATA CIRCUIT

WIRING DIAGRAM

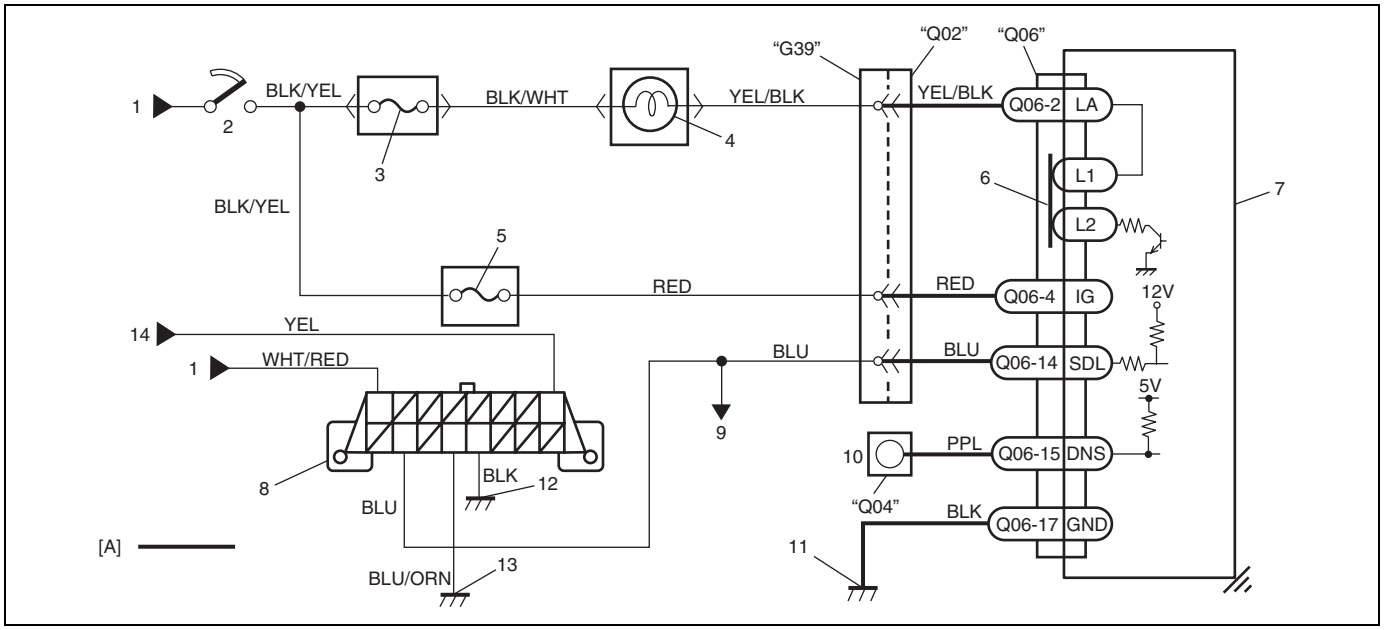

[A]: Air bag harness	5. "AIR BAG" fuse	10. "AIR BAG" monitor coupler
1. From main fuse	6. Connection detection pin	11. Ground for air bag system
2. Ignition switch	7. SDM	12. Ground on body
3. "IG METER" fuse	8. DLC	13. Ground on Engine block
4. "AIR BAG" warning lamp in combination lamp	9. To ECM, TCM (if equipped) and ABS control module (if equipped)	14. Immobilizer control module (if equipped)

CAUTION:

- **Be sure to perform AIR BAG DIAGNOSTIC SYSTEM CHECK before starting diagnosis according to flow table.**
- **When measurement of resistance or voltage is required in this table, use a tester along with a correct terminal adapter from special tool (Connector test adapter kit).**
- **When a check for proper connection is required, refer to INTERMITTENT AND POOR CONNECTIONS in this section.**
- **If there is open circuit in the air bag wire harness, connector or terminal is found damaged, replace the wire harness, connector and terminal as an assembly.**

TABLE TEST DESCRIPTION

STEP 1 : An improper connection to the data link connector (DLC) will prevent communications from being established.
STEP 2 : This test checks whether it is possible to communicate with other control module.
STEP 3 : This test checks for an open in "BLU" circuit (in air bag harness).

DIAGNOSTIC FLOW TABLE

Step	Action	Yes	No
1	1) Make sure that SUZUKI scan tool is free from malfunction and correct cartridge for air bag system is used. 2) Ignition switch OFF. 3) Check proper connection of SUZUKI scan tool to DLC. Is connection in good condition?	Go to step 2.	Properly connect SUZUKI scan tool to DLC.

Step	Action	Yes	No
2	1) Check if communication is possible by trying communication with other control module (ECM, TCM (if equipped) or ABS control module (if equipped)). Is it possible to communicate with other control module?	Go to step 3.	Repair open in common section of serial data circuit (“BLU” wire circuit) used by all controllers or short to ground or power circuit which has occurred somewhere in serial data circuit (“BLU” wire circuit).
3	1) With ignition switch OFF, disconnect SDM and “Q02” connector. 2) Check proper connection at “Q02-2” (“BLU” wire) terminal for DLC. 3) If OK, then check resistance between “Q02-2” (“BLU” wire) terminal and “Q06-14” terminal of SDM connector. Is resistance 1 Ω or less?	Substitute a known-good SDM and recheck.	Repair high resistance or open in “BLU” wire circuit (in air bag harness).

Fig. for STEP 1

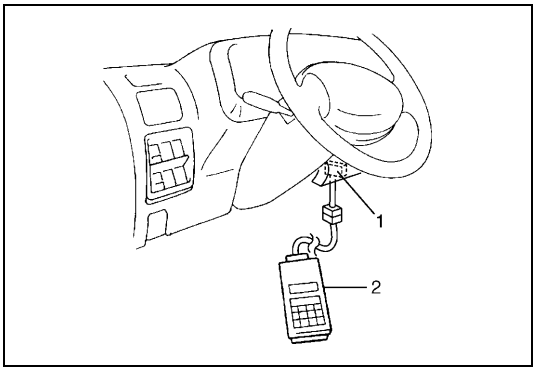

1.	DLC
2.	Scan tool

Fig. for STEP 3

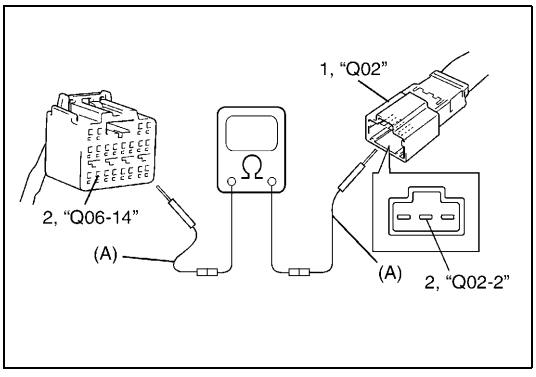

1.	Air bag harness side connector
2.	“BLU” wire terminal

Special tool
(A) : 09932-76010

NOTE:

Upon completion of inspection and repair work, perform following items.

- **Reconnect all air bag system components, ensure all components are properly mounted.**
- **Repeat AIR BAG DIAGNOSTIC SYSTEM CHECK to confirm that the trouble has been corrected.**

DTC B1015 - PASSENGER AIR BAG INITIATOR CIRCUIT RESISTANCE HIGH
DTC B1016 - PASSENGER AIR BAG INITIATOR CIRCUIT RESISTANCE LOW
DTC B1018 - PASSENGER AIR BAG INITIATOR CIRCUIT SHORT TO GROUND
DTC B1019 - PASSENGER AIR BAG INITIATOR CIRCUIT SHORT TO POWER CIRCUIT

WIRING DIAGRAM

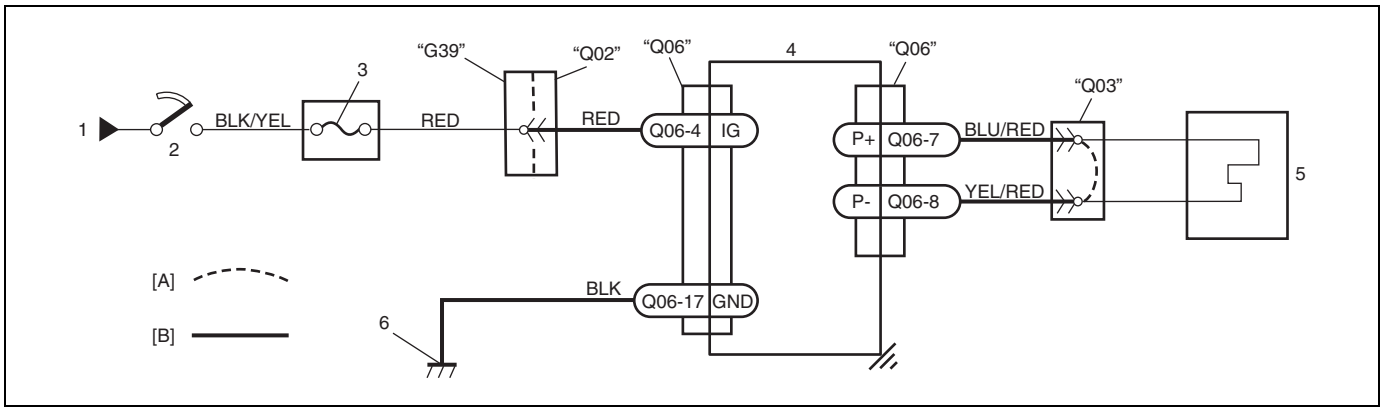

[A]: Shorting bar	1. From main fuse	3. "AIR BAG" fuse	5. Passenger air bag (inflator) module
[B]: Air bag harness	2. Ignition switch	4. SDM	6. Ground for air bag system

CAUTION:

- **Be sure to perform AIR BAG DIAGNOSTIC SYSTEM CHECK before starting diagnosis according to flow table.**
- **When measurement of resistance or voltage is required in this table, use a tester along with a correct terminal adaptor from special tool (Connector test adapter kit).**
- **When a check for proper connection is required, refer to INTERMITTENT AND POOR CONNECTIONS in this section.**
- **If there is open circuit in the air bag wire harness, connector or terminal is found damaged, replace the wire harness, connector and terminal as an assembly.**

DTC WILL SET WHEN

DTC B1015 :

The combined resistance of the passenger air bag (inflator) module, harness wiring and connector terminal contact is above a specified value for specified time.

DTC B1016 :

The combined resistance of the passenger air bag (inflator) module, harness wiring and connector terminal contact is below a specified value for specified time.

DTC B1018 :

The voltage measured at passenger air bag initiator circuit is below a specified value for specified time.

DTC B1019 :

The voltage measured at passenger air bag initiator circuit is above a specified value for specified time.

TABLE TEST DESCRIPTION

DTC B1015, B1016, B1018 and B1019 :

STEP 1 : Check whether malfunction is in passenger air bag (inflator) module.
STEP 2 : Check passenger air bag (inflator) module initiator circuit in air bag harness.
STEP 3 : Check passenger air bag (inflator) module initiator circuit in air bag harness. (for DTC B1019 only)

DIAGNOSTIC FLOW TABLE

DTC B1015 :

Step	Action	Yes	No
1	1) With ignition switch OFF, disconnect passenger air bag (inflator) module connector behind the glove box. 2) Check proper connection to passenger air bag (inflator) module at terminals in “Q03” connector. 3) If OK then connect Special Tool (B) to passenger air bag (inflator) module connector disconnected at the step 1). With ignition switch ON, is DTC B1015 current?	Go to step 2.	Ignition switch OFF. Replace passenger air bag (inflator) module (Refer to PASSENGER AIR BAG (INFLATOR) MODULE in this section).
2	1) With ignition switch OFF, disconnect SDM. 2) Check proper connection to SDM at terminals “Q06-7” and “Q06-8”. 3) If OK then measure resistance between “Q06-7” and “Q06-8” terminals with connected Special Tool (B). Is resistance 4.5 Ω or less?	Substitute a known-good SDM and recheck.	Repair high resistance or open in “YEL/RED” or “BLU/RED” wire circuit.

Fig. for STEP 1 and 2

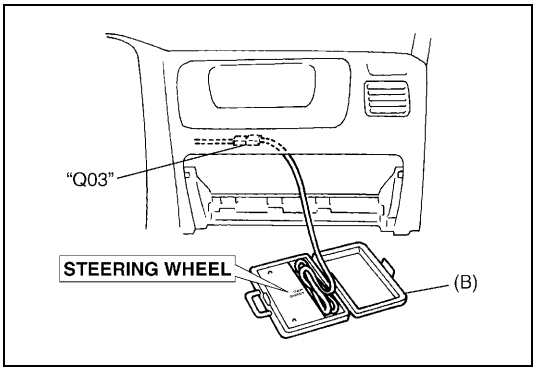

Fig. for STEP 2

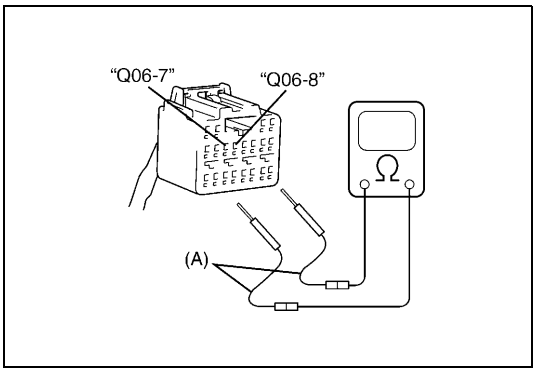

Special tool
(A) : 09932-76010
(B) : 09932-75010

NOTE:

Upon completion of inspection and repair work, perform following items.

- **Reconnect all air bag system components, ensure all components are properly mounted.**
- **Clear diagnostic trouble codes (Refer to DTC CLEARANCE), if any.**
- **Repeat AIR BAG DIAGNOSTIC SYSTEM CHECK to confirm that the trouble has been corrected.**

DTC B1016:

Step	Action	Yes	No
1	1) With ignition switch OFF, disconnect passenger air bag (inflator) module connector behind the glove box. 2) Check proper connection to passenger air bag (inflator) module at terminals in "Q03" connector. 3) If OK then connect Special Tool (B) to passenger air bag (inflator) module connector disconnected at the step 1). With ignition switch ON, is DTC B1016 current?	Go to step 2.	Ignition switch OFF. Replace passenger air bag (inflator) module (Refer to PASSENGER AIR BAG (INFLATOR) MODULE in this section).
2	1) With ignition switch OFF, disconnect SDM. 2) Check proper connection to SDM at terminals "Q06-7" and "Q06-8". 3) If OK then measure resistance between "Q06-7" and "Q06-8" terminals with connected Special Tool (B). Is resistance 1.4 Ω or more?	Substitute a known-good SDM and recheck.	Repair short from "YEL/RED" wire circuit to "BLU/RED" wire circuit or from "YEL/RED" or "BLU/RED" wire circuit to other wire circuit.

Fig. for STEP 1 and 2

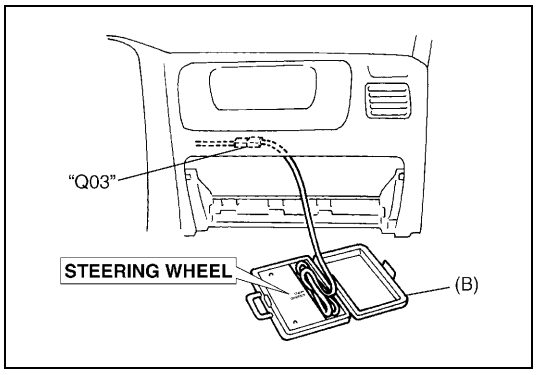

Fig. for STEP 2

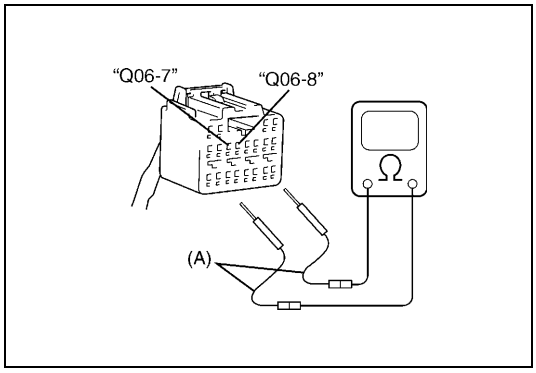

Special tool
(A) : 09932-76010
(B) : 09932-75010

NOTE:

Upon completion of inspection and repair work, perform following items.

1) Reconnect all air bag system components, ensure all components are properly mounted.
2) Clear diagnostic trouble codes (Refer to DTC CLEARANCE), if any.
3) Repeat AIR BAG DIAGNOSTIC SYSTEM CHECK to confirm that the trouble has been corrected.

DTC B1018:

Step	Action	Yes	No
1	1) With ignition switch OFF, disconnect passenger air bag (inflator) module connector behind the glove box. 2) Check proper connection to passenger air bag (inflator) module at terminals in “Q03” connector. 3) If OK then connect Special Tool (B) to passenger air bag (inflator) module connector disconnected at the step 1). With ignition switch ON, is DTC B1018 current?	Go to step 2.	Ignition switch OFF. Replace passenger air bag (inflator) module (Refer to PASSENGER AIR BAG (INFLATOR) MODULE in this section).
2	1) With ignition switch OFF, disconnect Special Tool (B) and SDM. 2) Measure resistance between “Q06-7” terminals and body ground. Is resistance 10 W or more?	Go to step 3.	Repair short from “BLU/RED” wire circuit to ground.
3	1) Measure resistance between “Q06-8” terminal and body ground. Is resistance 10 Ω or more?	Substitute a known-good SDM and recheck.	Repair short from “YEL/RED” wire circuit to ground.

Fig. for STEP 1, 2 and 3

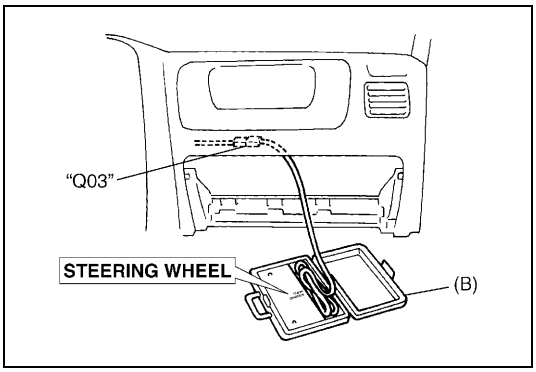

Fig. for STEP 2

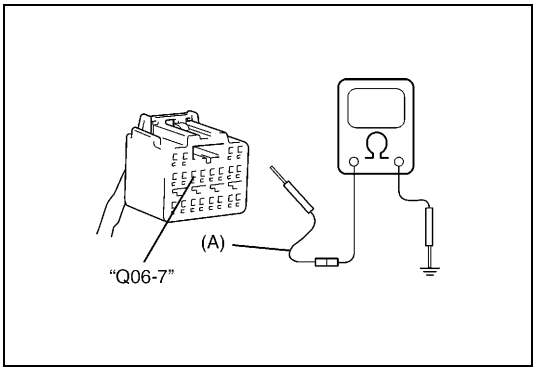

Fig. for STEP 3

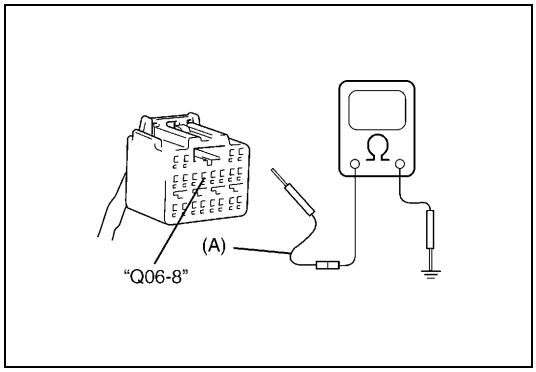

Special tool
(A) : 09932-76010
(B) : 09932-75010

NOTE:

Upon completion of inspection and repair work, perform following items.

- **Reconnect all air bag system components, ensure all components are properly mounted.**
- **Clear diagnostic trouble codes (Refer to DTC CLEARANCE), if any.**
- **Repeat AIR BAG DIAGNOSTIC SYSTEM CHECK to confirm that the trouble has been corrected.**

DTC B1019:

Step	Action	Yes	No
1	1) With ignition switch OFF, disconnect passenger air bag (inflator) module connector behind the glove box. 2) Check proper connection to passenger air bag (inflator) module at terminals in "Q03" connector. 3) If OK then connect Special Tool (B) to passenger air bag (inflator) module connector disconnected at the step 1). With ignition switch ON, is DTC B1019 current?	Go to step 2.	Ignition switch OFF. Replace passenger air bag (inflator) module (Refer to PASSENGER AIR BAG (INFLATOR) MODULE in this section).
2	1) With ignition switch OFF, disconnect Special Tool (B) and SDM. 2) Measure voltage from "Q06-7" terminal to body ground. With ignition switch ON, is voltage 1 V or less?	Go to step 3.	Repair short from "BLU/RED" wire circuit to power circuit.
3	1) Measure voltage from "Q06-8" terminal to body ground. With ignition switch ON, is voltage 1 V or less?	Substitute a known-good SDM and recheck.	Repair short from "YEL/RED" wire circuit to power circuit.

Fig. for STEP 1, 2 and 3

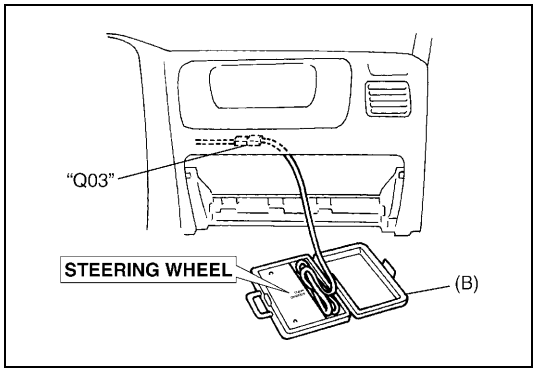

Fig. for STEP 2

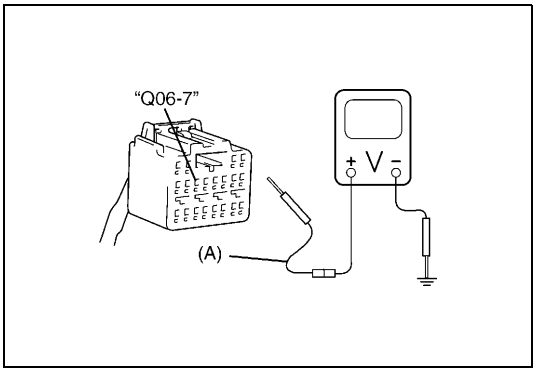

Fig. for STEP 3

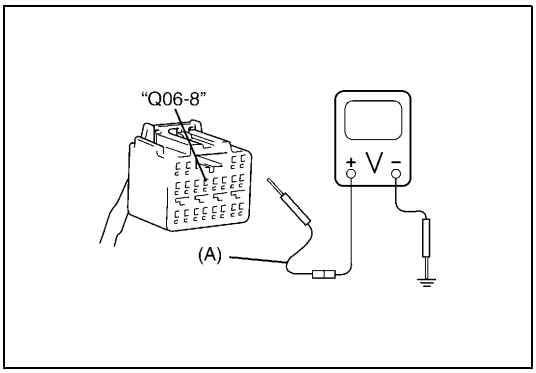

Special tool
(A) : 09932-76010
(B) : 09932-75010

NOTE:

Upon completion of inspection and repair work, perform following items.

- **Reconnect all air bag system components, ensure all components are properly mounted.**
- **Clear diagnostic trouble codes (Refer to DTC CLEARANCE), if any.**
- **Repeat AIR BAG DIAGNOSTIC SYSTEM CHECK to confirm that the trouble has been corrected.**

DTC B1021 – DRIVER AIR BAG INITIATOR CIRCUIT RESISTANCE HIGH
DTC B1022 – DRIVER AIR BAG INITIATOR CIRCUIT RESISTANCE LOW
DTC B1024 – DRIVER AIR BAG INITIATOR CIRCUIT SHORT TO GROUND
DTC B1025 – DRIVER AIR BAG INITIATOR CIRCUIT SHORT TO POWER CIRCUIT

WIRING DIAGRAM

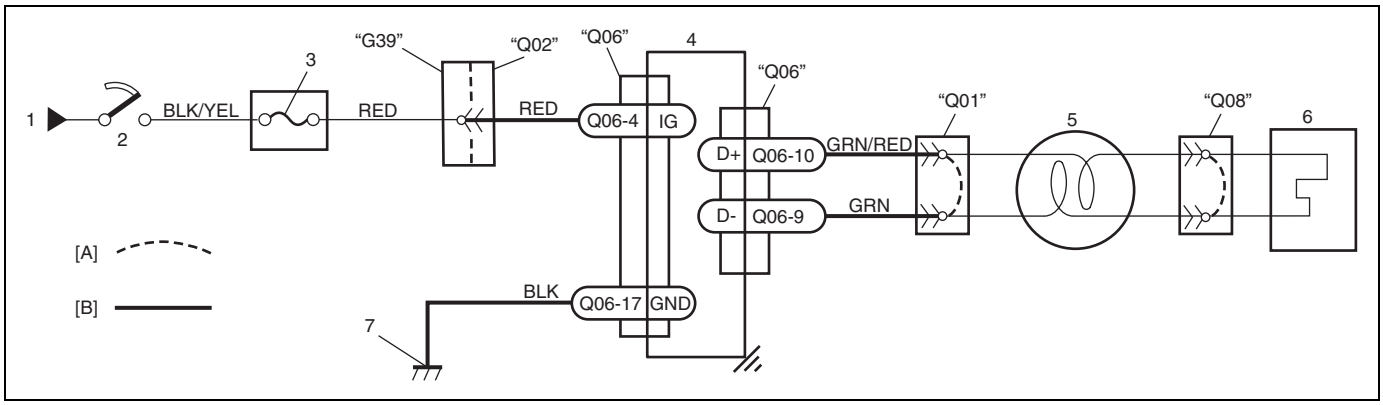

[A] : Shorting bar	2. Ignition switch	5. Contact coil assembly
[B] : Airbag harness	3. "AIR BAG" fuse	6. Driver air bag (inflator) module
1. From main fuse	4. SDM	7. Ground for air bag system

CAUTION:

- Be sure to perform AIR BAG DIAGNOSTIC SYSTEM CHECK before starting diagnosis according to flow table.
- When measurement of resistance or voltage is required in this table, use a tester along with a correct terminal adapter from special tool (Connector test adapter kit).
- When a check for proper connection is required, refer to INTERMITTENT AND POOR CONNECTIONS in this section.
- If there is open circuit in the air bag wire harness, connector or terminal is found damaged, replace the wire harness, connector and terminal as an assembly.

DTC WILL SET WHEN

DTC B1021 :

The combined resistance of the driver air bag (inflator) module, contact coil assembly, harness wiring and connector terminal contact is above a specified value for specified time.

DTC B1022 :

The combined resistance of the driver air bag (inflator) module, contact coil assembly, harness wiring and connector terminal contact is below a specified value for specified time.

DTC B1024 :

The voltage measured at driver air bag initiator circuit is below a specified value for specified time.

DTC B1025 :

The voltage measured at driver air bag initiator circuit is above a specified value for specified time.

TABLE TEST DESCRIPTION

DTC B1021, B1022, B1024 and B1025 :

STEP 1 : Check whether malfunction is in contact coil and driver air bag (inflator) module or the others.
STEP 2 : Check driver air bag (inflator) module initiator circuit in air bag harness.
STEP 3 : Check whether malfunction is in contact coil or driver air bag (inflator) module.

DIAGNOSTIC FLOW TABLE

DTC B1021 :

Step	Action	Yes	No
1	1) With ignition switch OFF, disconnect contact coil connector located near the base of the steering column. 2) Check proper connection to contact coil at terminals in “Q01” connector. 3) If OK then connect Special Tool (B) to contact coil connector disconnected at step 1). With ignition switch ON, is DTC B1021 current?	Go to step 2.	Go to step 3.
2	1) With ignition switch OFF, disconnect SDM. 2) Check proper connection to SDM at terminals “Q06-9” and “Q06-10”. 3) If OK then measure resistance between “Q06-9” and “Q06-10” terminals with connected Special Tool (B). Is resistance 4.5 Ω or less?	Substitute a known-good SDM and recheck.	Repair high resistance or open in “GRN” or “GRN/RED” wire circuit.
3	1) With ignition switch OFF, disconnect Special Tool (B) then reconnect contact coil connector located near the base of the steering column. 2) Remove driver air bag (inflator) module from steering wheel (Refer to DRIVER AIR BAG (INFLATOR) MODULE in Section 3C). 3) Check proper connection to driver air bag (inflator) module at terminals in “Q08” connector. 4) If OK then connect Special Tool (B) to “Q08” connector. With ignition switch ON, is DTC B1021 current?	Ignition switch OFF. Replace contact coil assembly (Refer to COMBINATION SWITCH/CONTACT COIL AND COMBINATION SWITCH ASSEMBLY in Section 3C).	Ignition switch OFF. Replace driver air bag (inflator) module (Refer to DRIVER AIR BAG (INFLATOR) MODULE in Section 3C).

Fig. for STEP 1 and 2

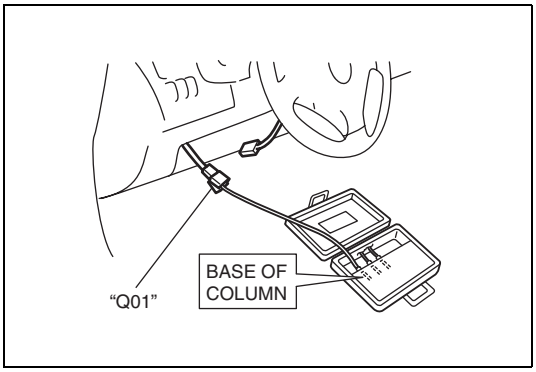

Fig. for STEP 2

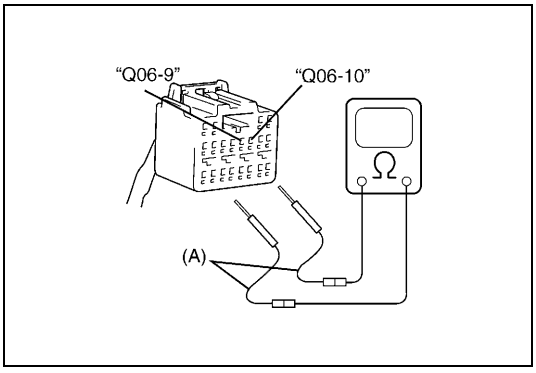

Fig. for STEP 3

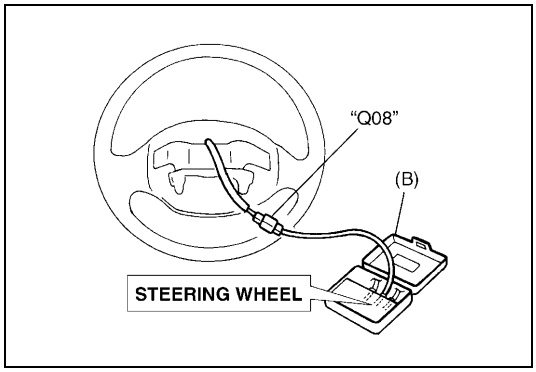

Special tool
(A) : 09932-76010
(B) : 09932-75010

NOTE:

Upon completion of inspection and repair work, perform following items.

- **Reconnect all air bag system components, ensure all components are properly mounted.**
- **Clear diagnostic trouble codes (Refer to DTC CLEARANCE), if any.**
- **Repeat AIR BAG DIAGNOSTIC SYSTEM CHECK to confirm that the trouble has been corrected.**

DTC B1022 :

Step	Action	Yes	No
1	1) With ignition switch OFF, disconnect contact coil connector located near the base of the steering column. 2) Check proper connection to contact coil at terminals in "Q01" connector. 3) If OK then connect Special Tool (B) to contact coil connector disconnected at step 1). With ignition switch ON, is DTC B1022 current?	Go to step 2.	Go to step 3.
2	1) With ignition switch OFF, disconnect SDM. 2) Check proper connection to SDM at terminals "Q06-9" and "Q06-10". 3) If OK then measure resistance between "Q06-9" and "Q06-10" terminals with connected Special Tool (B). Is resistance 1.7 Ω or more?	Substitute a known-good SDM and recheck.	Repair short from "GRN" wire circuit to "GRN/RED" wire circuit or from "GRN" or "GRN/RED" wire circuit to other wire circuit.
3	1) With ignition switch OFF, disconnect Special Tool (B) then reconnect contact coil connector located near the base of the steering column. 2) Remove driver air bag (inflator) module from steering wheel (Refer to DRIVER AIR BAG (INFLATOR) MODULE in Section 3C). 3) Check proper connection to driver air bag (inflator) module at terminals in "Q08" connector. 4) If OK then connect Special Tool (B) to "Q08" connector. With ignition switch ON, is DTC B1022 current?	Ignition switch OFF. Replace contact coil assembly (Refer to COMBINATION SWITCH/ CONTACT COIL AND COMBINATION SWITCH ASSEMBLY in Section 3C).	Ignition switch OFF. Replace driver air bag (inflator) module (Refer to DRIVER AIR BAG (INFLATOR) MODULE in Section 3C).

Fig. for STEP 1 and 2

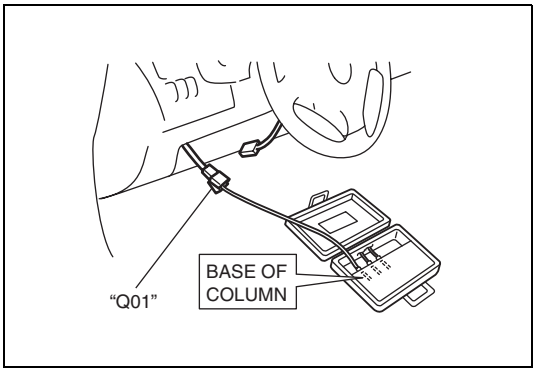

Fig. for STEP 2

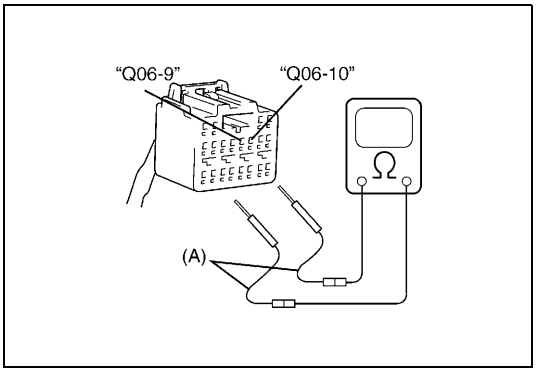

Fig. for STEP 3

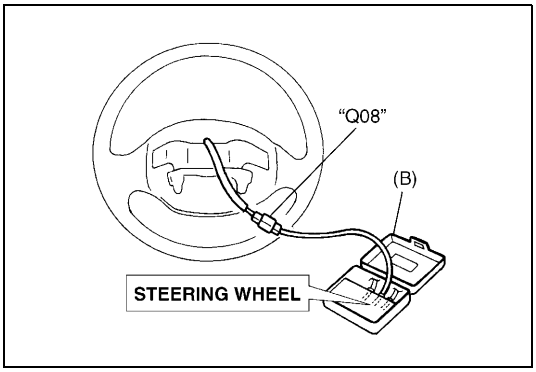

Special tool
(A) : 09932-76010
(B) : 09932-75010

NOTE:

Upon completion of inspection and repair work, perform following items.

- **Reconnect all air bag system components, ensure all components are properly mounted.**
- **Clear diagnostic trouble codes (Refer to DTC CLEARANCE), if any.**
- **Repeat AIR BAG DIAGNOSTIC SYSTEM CHECK to confirm that the trouble has been corrected.**

DTC B1024 :

Step	Action	Yes	No
1	1) With ignition switch OFF, disconnect contact coil connector located near the base of the steering column. 2) Check proper connection to contact coil at terminals in “Q01” connector. 3) If OK then connect Special Tool (B) to contact coil connector disconnected at step 1). With ignition switch ON, is DTC B1024 current?	Go to step 2.	Go to step 3.
2	1) With ignition switch OFF, disconnect Special Tool (B) and SDM. 2) Measure resistance between “Q06-9” terminal and body ground and between “Q06-10” terminal and body ground. Are they 10 Ω or more?	Substitute a known-good SDM and recheck.	Repair short from “GRN” or “GRN/RED” wire circuit to ground.
3	1) With ignition switch OFF, disconnect Special Tool (B) then reconnect contact coil connector located near the base of the steering column. 2) Remove driver air bag (inflator) module from steering wheel (Refer to DRIVER AIR BAG (INFLATOR) MODULE in Section 3C). 3) Check proper connection to driver air bag (inflator) module at terminals in “Q08” connector. 4) If OK then connect Special Tool (B) to “Q08” connector. With ignition switch ON, is DTC B1024 current?	Ignition switch OFF. Replace contact coil assembly (Refer to COMBINATION SWITCH/CONTACT COIL AND COMBINATION SWITCH ASSEMBLY in Section 3C).	Ignition switch OFF. Replace driver air bag (inflator) module (Refer to DRIVER AIR BAG (INFLATOR) MODULE in Section 3C).

Fig. for STEP 1 and 2

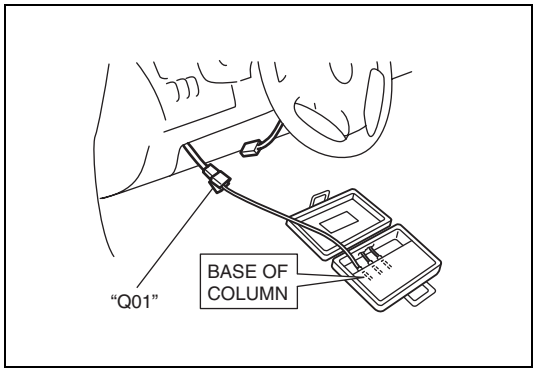

Fig. for STEP 2

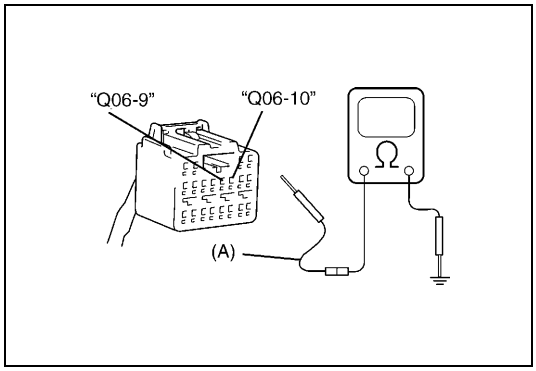

Fig. for STEP 3

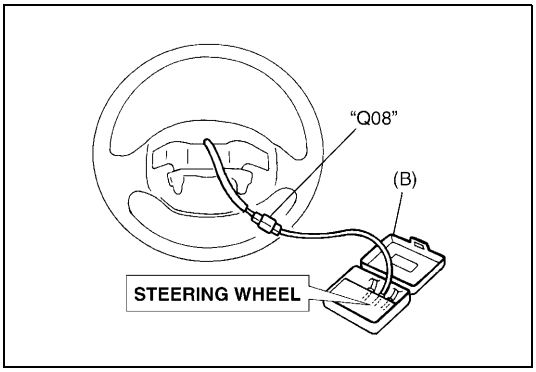

Special tool
(A) : 09932-76010
(B) : 09932-75010

NOTE:

Upon completion of inspection and repair work, perform following items.

- **Reconnect all air bag system components, ensure all components are properly mounted.**
- **Clear diagnostic trouble codes (Refer to DTC CLEARANCE), if any.**
- **Repeat AIR BAG DIAGNOSTIC SYSTEM CHECK to confirm that the trouble has been corrected.**

DTC B1025 :

Step	Action	Yes	No
1	1) With ignition switch OFF, disconnect contact coil connector located near the base of the steering column. 2) Check proper connection to contact coil at terminals in "Q01" connector. 3) If OK then connect Special Tool (B) to contact coil connector disconnected at step 1). With ignition switch ON, is DTC B1025 current?	Go to step 2.	Go to step 3.
2	1) With ignition switch OFF, disconnect Special Tool (B) and SDM. 2) Measure voltage from " Q06-9" terminal to body ground and from "Q06-10" terminal to body ground. With ignition switch ON, are they 1 V or less?	Substitute a known-good SDM and recheck.	Repair short from "GRN" or "GRN/RED" wire circuit to power circuit.
3	1) With ignition switch OFF, disconnect Special Tool (B) then reconnect contact coil connector located near the base of the steering column. 2) Remove driver air bag (inflator) module from steering wheel (Refer to DRIVER AIR BAG (INFLATOR) MODULE in Section 3C). 3) Check proper connection to driver air bag (inflator) module at terminals in "Q08" connector. 4) If OK then connect Special Tool (B) to "Q08" connector. With ignition switch ON, is DTC B1025 current?	Ignition switch OFF. Replace contact coil assembly (Refer to COMBINATION SWITCH/ CONTACT COIL AND COMBINATION SWITCH ASSEMBLY in Section 3C).	Ignition switch OFF. Replace driver air bag (inflator) module (Refer to DRIVER AIR BAG (INFLATOR) MODULE in Section 3C).

Fig. for STEP 1 and 2

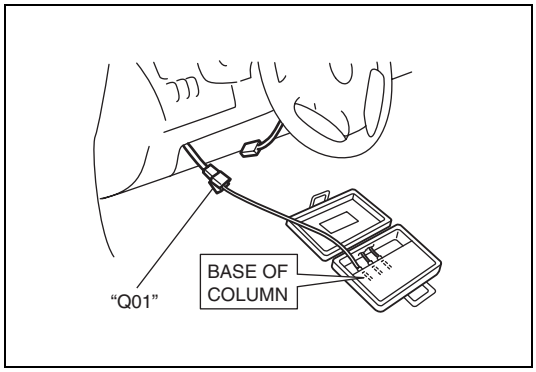

Fig. for STEP 2

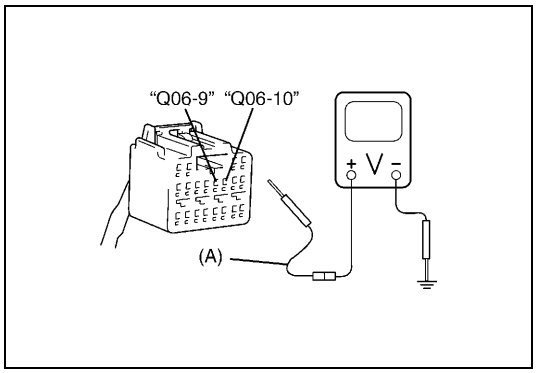

Fig. for STEP 3

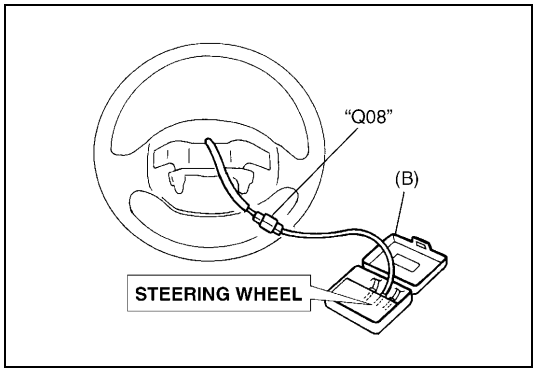

Tightening torque
(A) : 09932-76010
(B) : 09932-75010

NOTE:

Upon completion of inspection and repair work, perform following items.

- **Reconnect all air bag system components, ensure all components are properly mounted.**
- **Clear diagnostic trouble codes (Refer to DTC CLEARANCE), if any.**
- **Repeat AIR BAG DIAGNOSTIC SYSTEM CHECK to confirm that the trouble has been corrected.**

DTC B1032 – POWER SOURCE VOLTAGE LOW

WIRING DIAGRAM

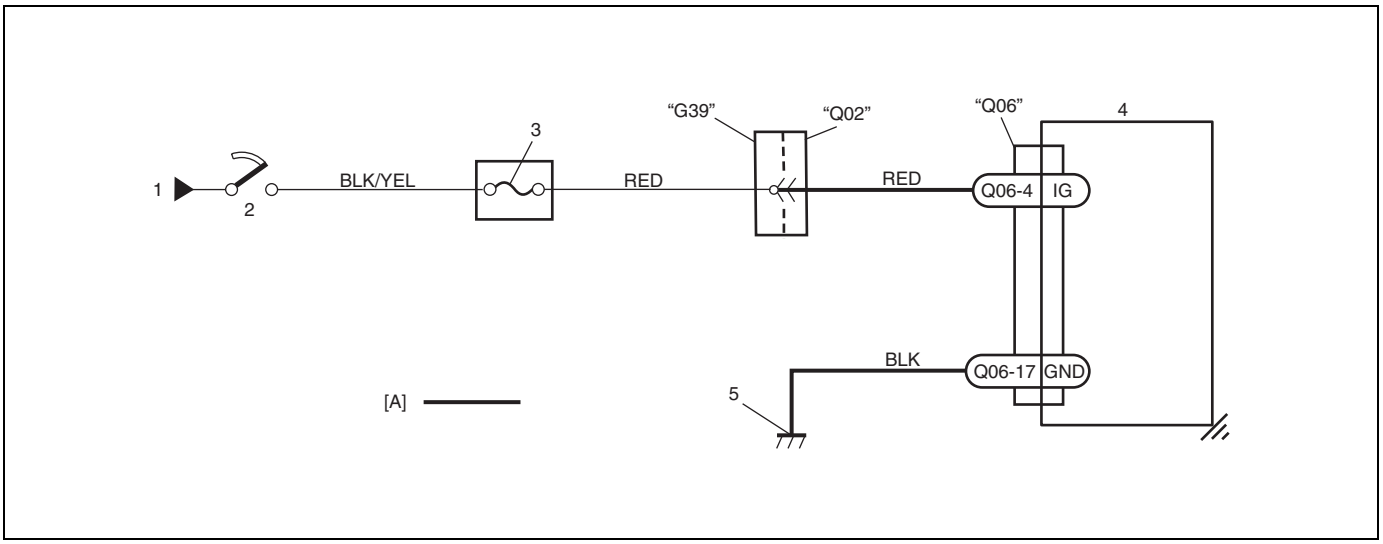

[A] : Air bag harness	2. Ignition switch	4. SDM
1. From main fuse	3. "AIR BAG" fuse	5. Ground for air bag system

CAUTION:

- **Be sure to perform AIR BAG DIAGNOSTIC SYSTEM CHECK before starting diagnosis according to flow table.**
- **When measurement of resistance or voltage is required in this table, use a tester along with a correct terminal adapter from special tool (Connector test adapter kit).**
- **When a check for proper connection is required, refer to INTERMITTENT AND POOR CONNECTIONS in this section.**
- **If there is open circuit in the air bag wire harness, connector or terminal is found damaged, replace the wire harness, connector and terminal as an assembly.**

DTC WILL SET WHEN

The power source voltage is below an approx. 8 V for specified time.

TABLE TEST DESCRIPTION

STEP 1 : Check if voltage applied to SDM is within normal range.
STEP 2 : Check if DTC 32 still exists.

DIAGNOSTIC FLOW TABLE

Step	Action	Yes	No
1	1) Measure voltage on battery. Is voltage 11 V or more?	Go to step 2.	Check Charging System and repair as necessary. (Refer to DIAGNOSIS in Section 6H)
2	1) With ignition switch OFF, disconnect SDM. 2) Check proper connection to SDM at "Q06-4" terminal. 3) If OK then ignition switch ON, and then check voltage from "Q06-4" terminal on SDM connector to body ground. Is voltage 8 V or more?	Go to step 4.	Go to step 3.

Step	Action	Yes	No
3	1) With ignition switch OFF, disconnect “G39” connector. 2) Check proper connection at “G39-1” (“RED” wire) terminal. 3) If OK then ignition switch ON, and then check voltage from “G39-1” (“RED” wire) terminal on instrument panel harness to body ground. Is voltage 8 V or more?	Repair poor connection, high resistance in “RED” or “BLK/YEL” circuit of air bag harness or “AIR BAG” fuse.	Possibly faulty points are as follows. Check each of them and repair as necessary. • Circuit from battery to “G39” connector • Charging System (Refer to DIAGNOSIS in Section 6H)
4	1) With ignition switch OFF, reconnect SDM. With ignition switch ON, is DTC B1032 current?	Substitute a known-good SDM and recheck.	Check Charging System and repair as necessary. (Refer to DIAGNOSIS in Section 6H)

Fig. for STEP 2

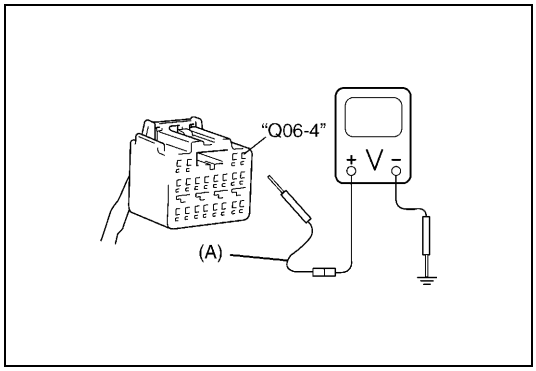

Fig. for STEP 3

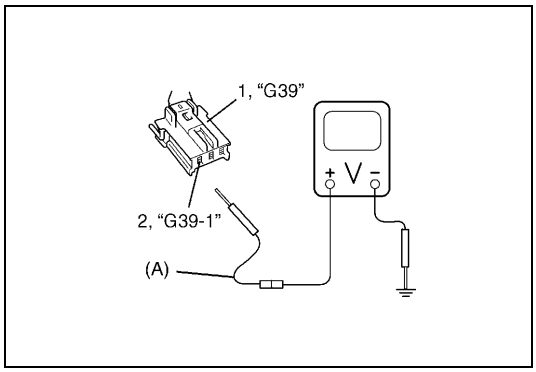

1.	Instrument panel harness side connector
2.	“RED” wire terminal

Special tool
(A) : 09932-76010

NOTE:

Upon completion of inspection and repair work, perform following items.

- **Reconnect all air bag system components, ensure all components are properly mounted.**
- **Clear diagnostic trouble codes (Refer to DTC CLEARANCE), if any.**
- **Repeat AIR BAG DIAGNOSTIC SYSTEM CHECK to confirm that the trouble has been corrected.**

DTC B1041 – DRIVER PRETENSIONER INITIATOR CIRCUIT RESISTANCE HIGH

DTC B1042 – DRIVER PRETENSIONER INITIATOR CIRCUIT RESISTANCE LOW

DTC B1043 – DRIVER PRETENSIONER INITIATOR CIRCUIT SHORT TO GROUND

DTC B1044 – DRIVER PRETENSIONER INITIATOR CIRCUIT SHORT TO POWER CIRCUIT

DTC B1045 – PASSENGER PRETENSIONER INITIATOR CIRCUIT RESISTANCE HIGH

DTC B1046 – PASSENGER PRETENSIONER INITIATOR CIRCUIT RESISTANCE LOW

DTC B1047 – PASSENGER PRETENSIONER INITIATOR CIRCUIT SHORT TO GROUND

DTC B1048 – PASSENGER PRETENSIONER INITIATOR CIRCUIT SHORT TO POWER CIRCUIT

WIRING DIAGRAM

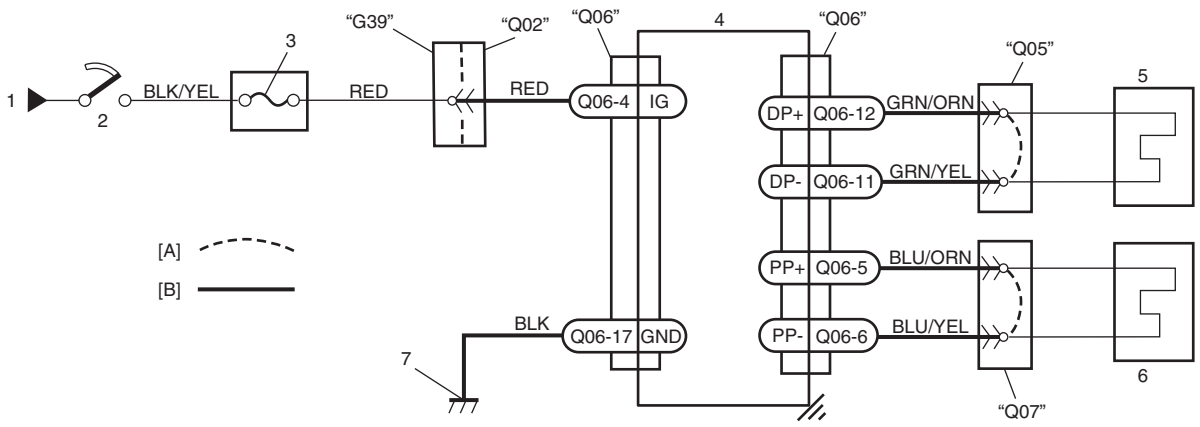

[A] : Shorting bar	2. Ignition switch	5. Driver seat belt pretensioner
[B] : Air bag harness	3. "AIR BAG" fuse	6. Passenger seat belt pretensioner
1. From main fuse	4. SDM	7. Ground for air bag system

CAUTION:

- **Be sure to perform AIR BAG DIAGNOSTIC SYSTEM CHECK before starting diagnosis according to flow table.**
- **When measurement of resistance or voltage is required in this table, use a tester along with a correct terminal adapter from special tool (Connector test adapter kit).**
- **When a check for proper connection is required, refer to INTERMITTENT AND POOR CONNECTIONS in this section.**
- **If there is open circuit in the air bag wire harness, connector or terminal is found damaged, replace the wire harness, connector and terminal as an assembly.**

DTC WILL SET WHEN

DTC B1041 and B1045 :

The resistance of driver or passenger seat belt pretensioner initiator circuit is above a specified value for specified time.

DTC B1042 and B1046 :

The resistance of driver or passenger seat belt pretensioner initiator circuit is below a specified value for specified time.

DTC B1043 and B1047 :

The voltage measured at driver or passenger seat belt pretensioner initiator circuit is below a specified value for specified time.

DTC B1044 and B1048 :

The voltage measured at driver or passenger seat belt pretensioner initiator circuit is above a specified value for specified time.

TABLE TEST DESCRIPTION

DTC B1041, B1042, B1043, B1044, B1045, B1046, B1047 and B1048 :

STEP 1 : Check whether malfunction is in seat belt pretensioner.

STEP 2 : Check seat belt pretensioner initiator circuit in air bag harness.

DIAGNOSTIC FLOW TABLE

DTC B1041 and B1045 :

Step	Action	Yes	No
1	1) With ignition switch OFF, remove center pillar inner garnish of applicable side then disconnect seat belt pretensioner connector. 2) Check proper connection to applicable seat belt pretensioner at terminals in “Q05” or “Q07” connector. 3) If OK then connect Special Tool (B) to seat belt pretensioner connector disconnected at the step 1. With ignition switch ON, is DTC B1041 or B1045 still current?	Go to step 2.	Ignition switch OFF. Replace seat belt pretensioner (Refer to Section 10).
2	1) With ignition switch OFF, disconnect SDM. 2) Check proper connection to SDM at terminals “Q06-11” and “Q06-12” or “Q06-6” and “Q06-5”. 3) If OK then measure resistance between “Q06-11” and “Q06-12” terminals or “Q06-6” and “Q06-5” terminals with connected Special Tool (B). Is resistance 4.5 Ω or less?	Substitute a known-good SDM and recheck.	DTC B1041 : Repair high resistance or open in “GRN/ORN” or “GRN/YEL” wire circuit. DTC B1045 : Repair high resistance or open in “BLU/YEL” or “BLU/ORN” wire circuit.

Fig. for STEP 1 and 2

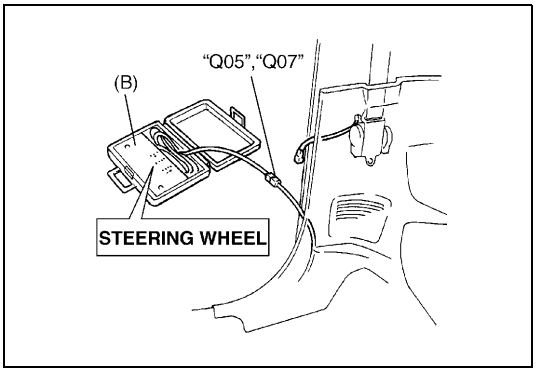

Fig. for STEP 2

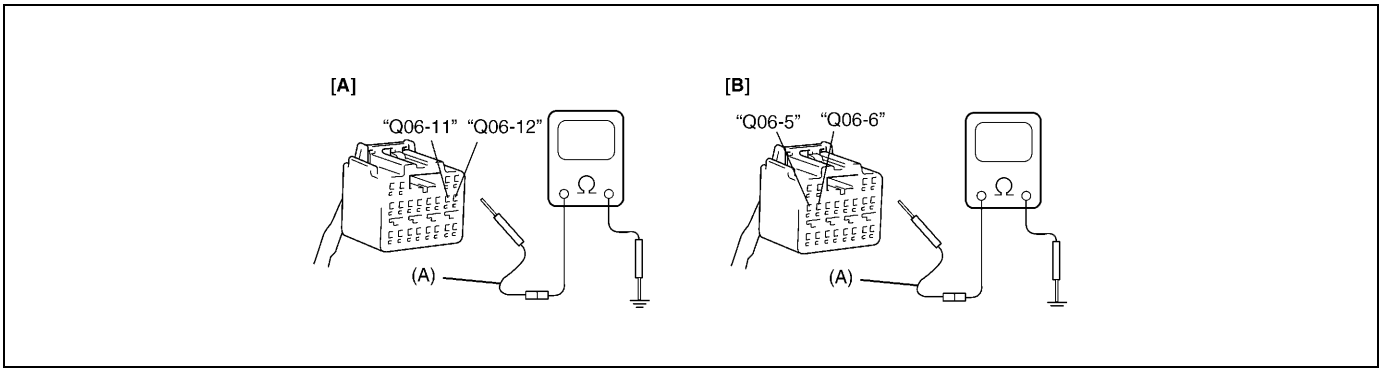

[A] : For DTC B1041
[B] : For DTC B1045

Special tool
(A) : 09932-76010
(B) : 09932-75010

NOTE:

Upon completion of inspection and repair work, perform following items.

- **Reconnect all air bag system components, ensure all components are properly mounted.**
- **Clear diagnostic trouble codes (Refer to DTC CLEARANCE), if any.**
- **Repeat AIR BAG DIAGNOSTIC SYSTEM CHECK to confirm that the trouble has been corrected.**

DTC B1042 and B1046 :

Step	Action	Yes	No
1	1) With ignition switch OFF, remove center pillar inner garnish of applicable side then disconnect seat belt pretensioner connector. 2) Check proper connection to applicable seat belt pretensioner at terminals in "Q05" or "Q07" connector. 3) If OK then connect Special Tool (B) to seat belt pretensioner connector disconnected at the step 1. With ignition switch ON, is DTC B1042 or B1046 still current?	Go to step 2.	Ignition switch OFF. Replace seat belt pretensioner (Refer to Section 10).

Step	Action	Yes	No
2	1) With ignition switch OFF, disconnect SDM. 2) Check proper connection to SDM at terminals “Q06-11” and “Q06-12” or “Q06-6” and “Q06-5”. 3) If OK then measure resistance between “Q06-11” and “Q06-12” terminals or “Q06-06” and “Q06-05” terminals with connected Special Tool (B). Is resistance 1.4 Ω or more?	Substitute a known-good SDM and recheck.	DTC B1042 : Repair short from “GRN/ORN” wire circuit to “GRN/YEL” wire circuit or from “GRN/ORN” or “GRN/YEL” wire circuit to other wire circuit. DTC B1046 : Repair short from “BLU/YEL” wire circuit to “BLU/ORN” wire circuit or from “BLU/YEL” or “BLU/ORN” wire circuit to other wire circuit.

Fig. for STEP 1 and 2

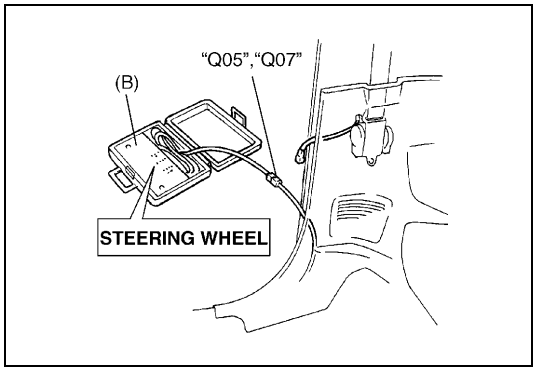

Fig. for STEP 2

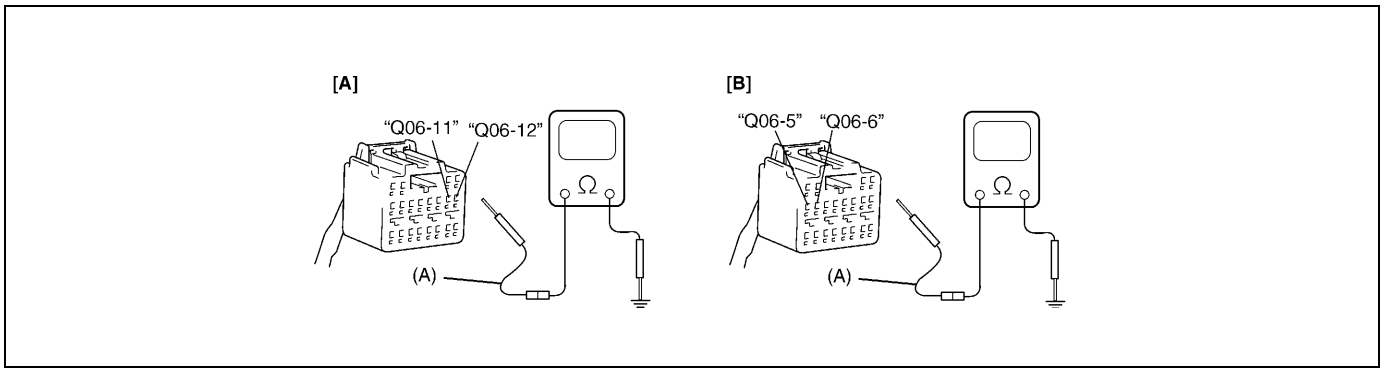

[A] : For DTC B1042
[B] : For DTC B1046

Special tool
(A) : 09932-76010
(B) : 09932-75010

NOTE:

Upon completion of inspection and repair work, perform following items.

- **Reconnect all air bag system components, ensure all components are properly mounted.**
- **Clear diagnostic trouble codes (Refer to DTC CLEARANCE), if any.**
- **Repeat AIR BAG DIAGNOSTIC SYSTEM CHECK to confirm that the trouble has been corrected.**

DTC B1043 and B1047 :

Step	Action	Yes	No
1	1) With ignition switch OFF, remove center pillar inner garnish of applicable side then disconnect seat belt pretensioner connector. 2) Check proper connection to applicable seat belt pretensioner at terminals in "Q05" or "Q07" connector. 3) If OK then connect Special Tool (B) to seat belt pretensioner connector disconnected at the step 1. With ignition switch ON, is DTC B1043 or B1047 still current?	Go to step 2.	Ignition switch OFF. Replace seat belt pretensioner (Refer to Section 10).
2	1) With ignition switch OFF, disconnect Special Tool (B) and SDM. 2) Measure resistance between "Q06-11" or "Q06-6" and body ground. Is resistance 10 Ω or more?	Substitute a known-good SDM and recheck.	DTC B1043 : Repair short "GRN/YEL" or "GRN/ORN" wire circuit to ground. DTC B1047 : Repair short from "BLU/YEL" or "BLU/ORN" wire circuit to ground.

Fig. for STEP 1 and 2

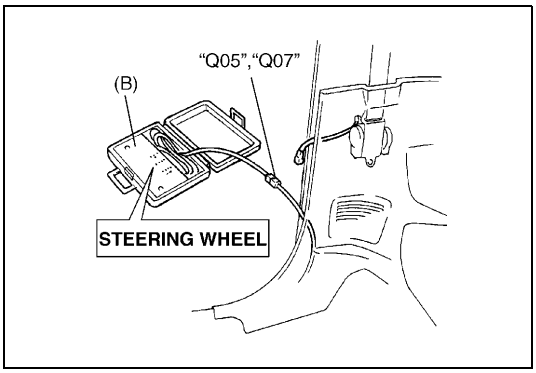

Fig. for STEP 2

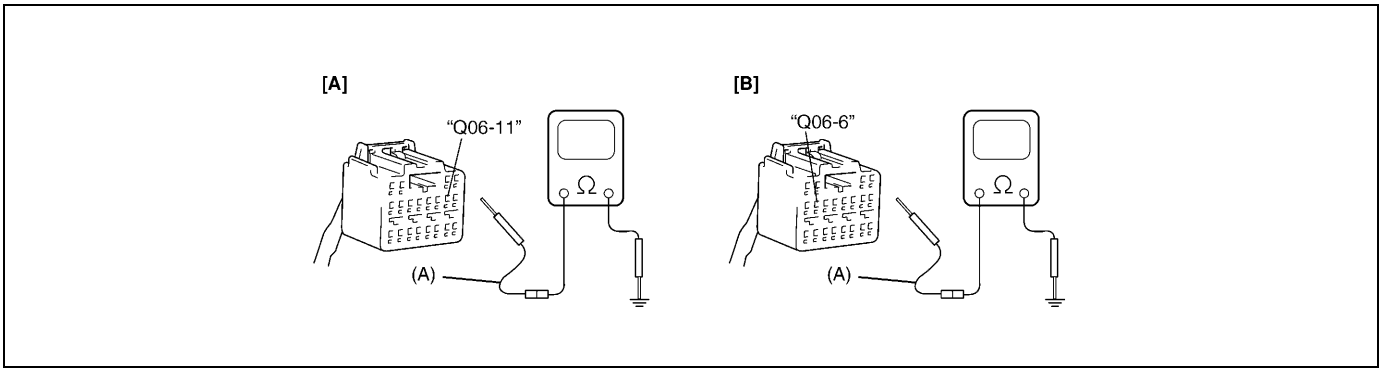

[A] : For DTC B1043
[B] : For DTC B1047

Special tool
(A) : 09932-76010
(B) : 09932-75010

NOTE:

Upon completion of inspection and repair work, perform following items.

- **Reconnect all air bag system components, ensure all components are properly mounted.**
- **Clear diagnostic trouble codes (Refer to DTC CLEARANCE), if any.**
- **Repeat AIR BAG DIAGNOSTIC SYSTEM CHECK to confirm that the trouble has been corrected.**

DTC B1044 and B1048 :

Step	Action	Yes	No
1	1) With ignition switch OFF, remove center pillar inner garnish of applicable side then disconnect seat belt pretensioner connector. 2) Check proper connection to applicable seat belt pretensioner at terminals in "Q05" or "Q07" connector. 3) If OK then connect Special Tool (B) to seat belt pretensioner connector disconnected at the step 1. With ignition switch ON, is DTC B1044 or B1048 still current?	Go to step 2.	Ignition switch OFF. Replace seat belt pretensioner (Refer to Section 10).
2	1) With ignition switch OFF, disconnect Special Tool (B) and SDM. 2) Measure voltage from "Q06-12" or "Q06-5" terminal to body ground. With ignition switch ON, is voltage 1 V or less?	Substitute a known-good SDM and recheck.	DTC B1044 : Repair short "GRN/ORN" or "GRN/YEL" wire circuit to power circuit. DTC B1048 : Repair short from "BLU/YEL" or "BLU/ORN" wire circuit to power circuit.

Fig. for STEP 1 and 2

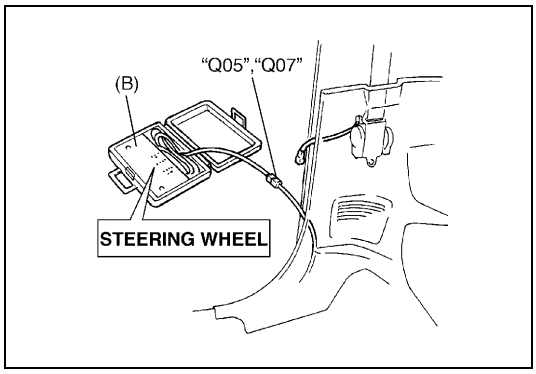

Fig. for STEP 2

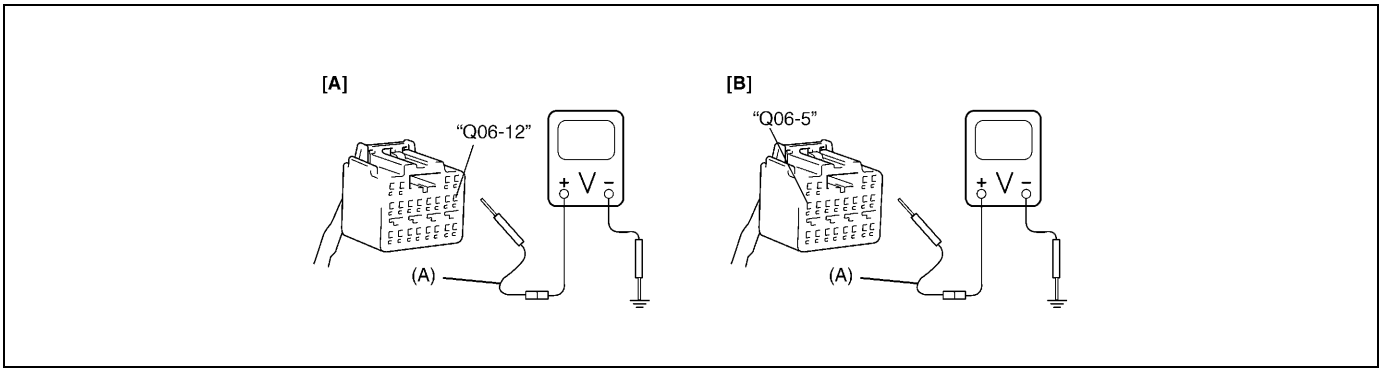

[A] : For DTC B1044
[B] : For DTC B1048

Special tool
(A) : 09932-76010
(B) : 09932-75010

NOTE:

Upon completion of inspection and repair work, perform following items.
- **Reconnect all air bag system components, ensure all components are properly mounted.**
- **Clear diagnostic trouble codes (Refer to DTC CLEARANCE), if any.**
- **Repeat AIR BAG DIAGNOSTIC SYSTEM CHECK to confirm that the trouble has been corrected.**

DTC B1051 – FRONTAL CRASH DETECTED (SYSTEM ACTIVATION COMMAND OUTPUTTED)

DTC WILL SET WHEN

The SDM detects a frontal crash of sufficient force to warrant activation of the air bag system. (SDM outputs a deployment command.)

TABLE TEST DESCRIPTION

STEP 1 : Check that DTC B1051 has been set although air bag has not been deployed.
STEP 2 : Check that DTC has been set due to failure of SDM.

NOTE:

Before executing items in this table, be sure to perform AIR BAG DIAGNOSTIC SYSTEM CHECK.

Step	Action	Yes	No
1	1) Ignition switch OFF. Has air bag system deployed?	Replace components and perform inspections as directed in "REPAIRS AND INSPECTIONS REQUIRED AFTER AN ACCIDENT".	Go to step 2.

Step	Action	Yes	No
2	1) Inspect front of vehicle and undercarriage for signs of impact. Are there signs of impact?	Replace components and perform inspections as directed in “REPAIRS AND INSPECTIONS REQUIRED AFTER AN ACCIDENT”.	Substitute a known-good SDM and recheck.

NOTE:

Upon completion of inspection and repair work, perform following items.

- **Reconnect all air bag system components, ensure all components are properly mounted.**
- **Repeat AIR BAG DIAGNOSTIC SYSTEM CHECK to confirm that the trouble has been corrected.**

DTC B1071 - INTERNAL SDM FAULT

DTC WILL SET WHEN

An internal SDM fault is detected by SDM.

NOTE:

Before executing items below, be sure to perform AIR BAG DIAGNOSTIC SYSTEM CHECK.

NOTE:

DTC B1071 can never be cleared once it has been set.

- **Ignition switch OFF.**
- **Replace SDM.**
- **Repeat AIR BAG DIAGNOSTIC SYSTEM CHECK.**

DTC B1013 – SYSTEM SPECIFICATIONS DIFFERENT FROM SDM SPECIFICATIONS

DTC WILL SET WHEN

Specifications of the air bag system differ from those of SDM.

NOTE:

Before executing items below, be sure to perform AIR BAG DIAGNOSTIC SYSTEM CHECK.

- **Ignition switch OFF.**
- **Replace SDM.**
- **Repeat AIR BAG DIAGNOSTIC SYSTEM CHECK.**

ON-VEHICLE SERVICE

SERVICE PRECAUTIONS

SERVICE AND DIAGNOSIS

WARNING/CAUTION labels are attached on each part of air bag system components (SDM, air bag (inflator) modules and seat belt pretensioners). Be sure to follow the instructions.

WARNING:

- **If the air bag system and another vehicle system both need repair, Suzuki recommends that the air bag system be repaired first, to help avoid unintended air bag system activation.**
- **Do not modify the steering wheel, dashboard or any other on or around air bag system components. Modifications can adversely affect air bag system performance and lead to injury.**
- **Failure to follow procedures could result in possible air bag system activation, personal injury or unneeded air bag system repairs.**

- Many of service procedures require disconnection of “AIR BAG” fuse and air bag (inflator) module(s) (driver and passenger) from initiator circuit to avoid an accidental deployment.
- Do not apply power to the air bag system unless all components are connected or a diagnostic chart requests it, as this will set a diagnostic trouble code (DTC).
- The “AIR BAG DIAGNOSTIC SYSTEM CHECK” must be the starting point of any air bag diagnostics. The “AIR BAG DIAGNOSTIC SYSTEM CHECK” will verify proper “AIR BAG” warning lamp operation and will lead you to the correct table to diagnose any air bag malfunctions. Bypassing these procedures may result in extended diagnostic time, incorrect diagnosis, and incorrect parts replacements.
- Never use air bag component parts from another vehicle.
- If the vehicle will be exposed to temperatures over 93°C (200°F) (for example, during a paint baking process), remove the air bag system components beforehand to avoid component damage or unintended system activation.
- When handling the air bag (inflator) modules (driver and passenger), seat belt pretensioners (driver and passenger) or SDM, be careful not to drop it or apply an impact to it. If an excessive impact was applied (e.g., SDM is dropped, air bag (inflator) module is dropped from a height of 90 cm (3 ft) or more, seat belt pretensioner (retractor assembly) is dropped from a height of 30 cm (1 ft) or more), never attempt disassembly or repair but replace it with a new one.
- When using electric welding, be sure to disconnect air bag (inflator) module connectors (driver and passenger) and seat belt pretensioner connectors (driver and passenger) respectively.
- When applying paint around the air bag system related parts, use care so that the harness or connector will not be exposed to the paint mist.
- Never expose air bag system component parts directly to hot air (drying or baking the vehicle after painting) or flames.

WARNING:

When performing service on or around air bag system components or air bag wiring, follow the procedures listed in the following pages to temporarily disable the air bag system.
Failure to follow procedures could result in possible air bag system activation, personal injury or unneeded air bag system repairs.

DISABLING AIR BAG SYSTEM

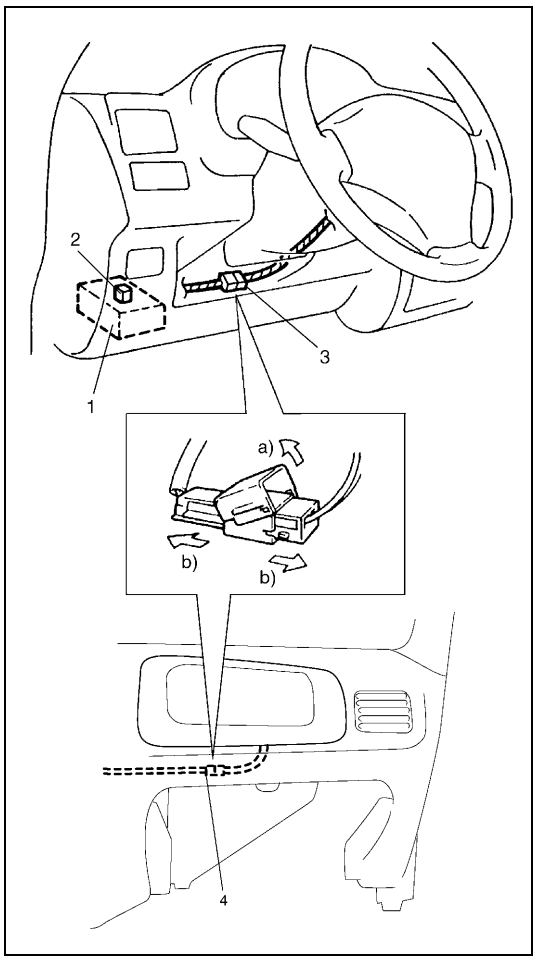

1) Turn steering wheel so that vehicle's wheels (front tires) and pointing straight ahead.
2) Turn ignition switch to “LOCK” position and remove key.
3) Remove “AIR BAG” fuse (2) from fuse box (1).
4) Disconnect Yellow connector (3) of contact coil and combination switch assembly.
   a) Release locking of lock lever.
   b) After unlocked, disconnect connector.
5) If equipped with passenger air bag (inflator) module, pull out glove box while pushing its stopper from both right and left sides and disconnect Yellow connector (4) of passenger air bag (inflator) module.
   a) Release locking of lock lever.
   b) After unlocked, disconnect connector.

NOTE:

With “AIR BAG” fuse removed and ignition switch ON, “AIR BAG” warning lamp will be ON.
This is normal operation and does not indicate a air bag system malfunction.

ENABLING AIR BAG SYSTEM

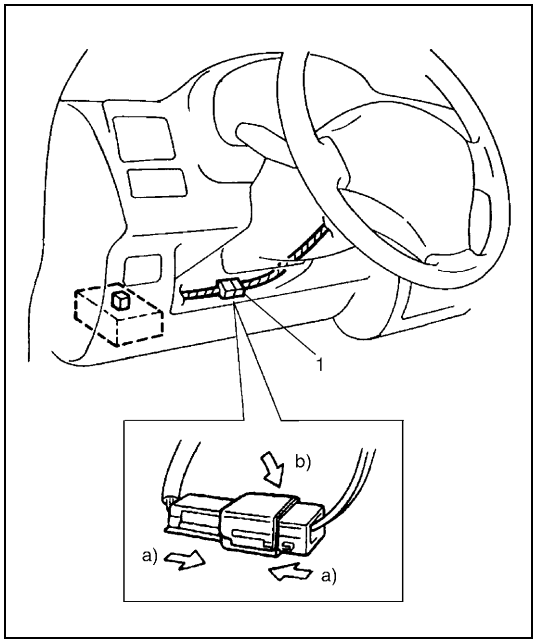

1) Turn ignition switch to “LOCK” position and remove key.
2) Connect Yellow connector (1) of contact coil and combination switch assembly, and be sure to lock connector with lock lever.
   a) Connect connector.
   b) Lock connector with lock lever.

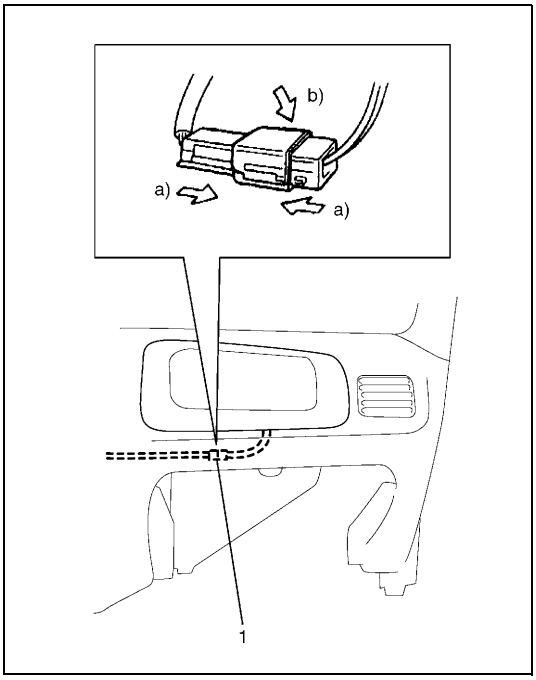

3) If equipped with passenger air bag (inflator) module, connect Yellow connector (1) of passenger air bag (inflator) module, and be sure to lock connector with lock lever.
   a) Connect connector.
   b) Lock connector with lock lever.
4) Install glove box.
5) Install “AIR BAG” fuse to fuse box.
6) Turn ignition switch to ON position and verify that “AIR BAG” warning lamp flashes 6 times and then turns OFF.
   If it does not operate as described, perform “AIR BAG DIAGNOSTIC SYSTEM CHECK”.

HANDLING AND STORAGE

SDM

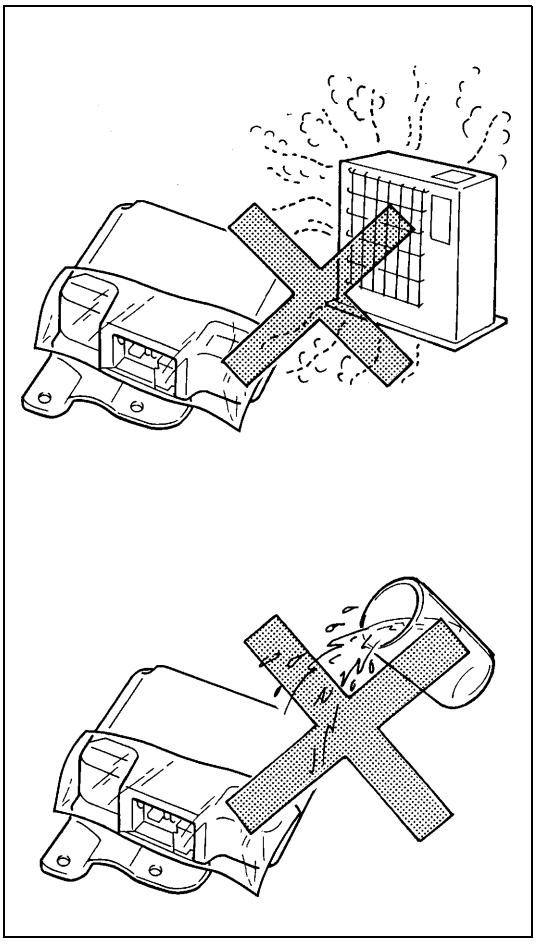

WARNING:

Never power up air bag system when SDM is not rigidly attached to the vehicle. Otherwise, personal injury may result.

CAUTION:

After detecting one time of such collision as to meet deployment conditions, the SDM must not be used. Refer to “AIR BAG DIAGNOSTIC SYSTEM CHECK” when checking the SDM.

- Never attempt disassembly of SDM.
- When storing SDM, select a place where neither high temperature nor high humidity is anticipated and oil, water and dust are kept off.
- If SDM has been dropped, replace it with a new one.
- If installation part of SDM was damaged, repair that part completely before reinstallation.
- All SDM and mounting bracket fasteners must be carefully torqued and the arrow must be pointed toward the front of the vehicle to ensure proper operation of the air bag system.

LIVE (UNDEPLOYED) AIR BAG (INFLATOR) MODULES

Special care is necessary when handling and storing a live (undeployed) air bag (inflator) modules.
The rapid gas generation produced during deployment of the air bag could cause the air bag (inflator) module, or an object in front of the air bag (inflator) module, to be thrown through the air in the unlikely event of an accidental deployment.

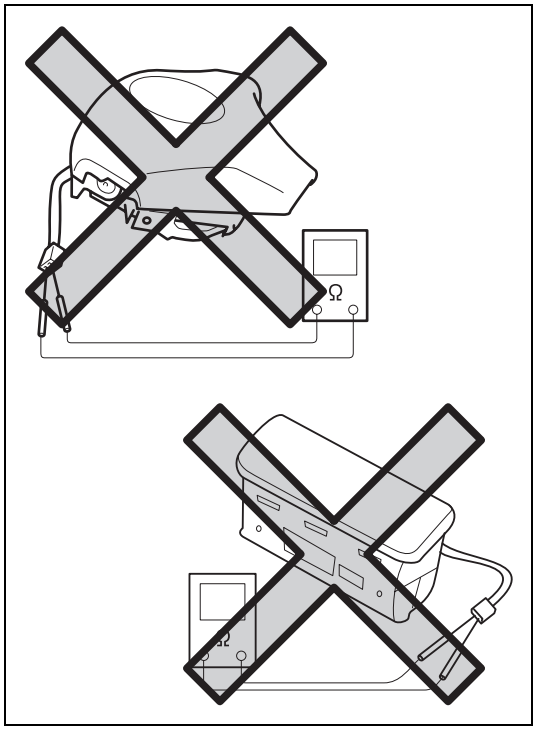

WARNING:

Never attempt to measure the resistance of the air bag (inflator) modules (driver and passenger). It is very dangerous as the electric current from the tester may deploy the air bag.

- Never attempt disassembly of the air bag (inflator) modules.
- If any abnormality is found, be sure to replace it with new one as an assembly.
- When an abnormality is noted as existing in the live (undeployed) air bag (inflator) module, be sure to deploy it before discarding it.
- When grease, cleaning agent, oil, water, etc., got on the air bag (inflator) modules (driver and passenger), wipe it off immediately with a dry cloth.
- If air bag (inflator) module was dropped from a height of 90 cm (3 ft) or more, it should be replaced with a new one as an assembly.

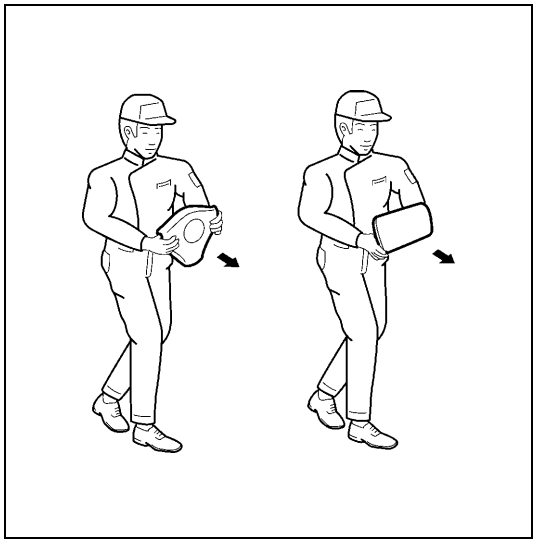

WARNING:

- **For handling and storage of a live air bag (inflator) module, select a place where the ambient temperature below 65°C (150°F), without high humidity and away from electric noise.**
- **When carrying a live air bag (inflator) module, make sure the bag opening is pointed away from you. In case of an accidental deployment, the bag will then deploy with minimal chance of injury. Never carry the air bag (inflator) module by the wires or connector on the underside of the module.**

Otherwise, personal injury may result.

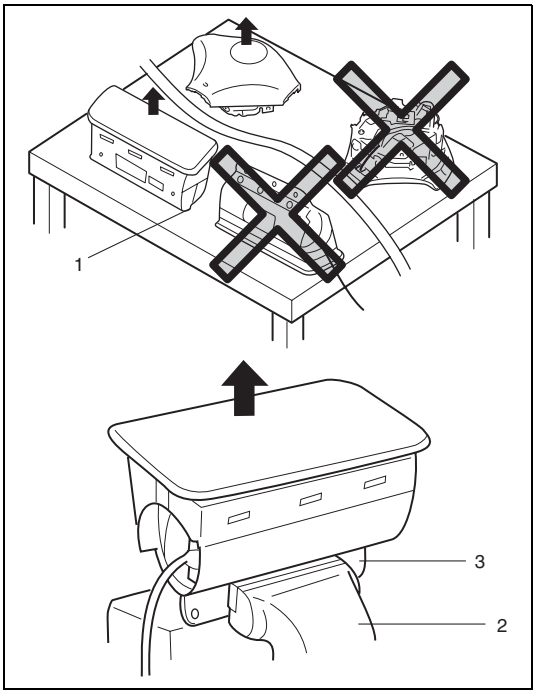

WARNING:

When placing a live air bag (inflator) module on bench or other surface, always face the bag up, away from the surface. As the live passenger air bag (inflator) module must be placed with its bag (trim cover) facing up, place it on the workbench with a slit (1) or use the workbench vise (2) to hold it securely at its lower mounting bracket (3).
It is also prohibited to place anything on top of the trim cover and stack air bag (inflator) modules.
This is necessary so that a free space is provided to allow the air bag to expand in the unlikely event of accidental deployment.
Otherwise, personal injury may result.

LIVE (INACTIVATED) SEAT BELT PRETENSIONER

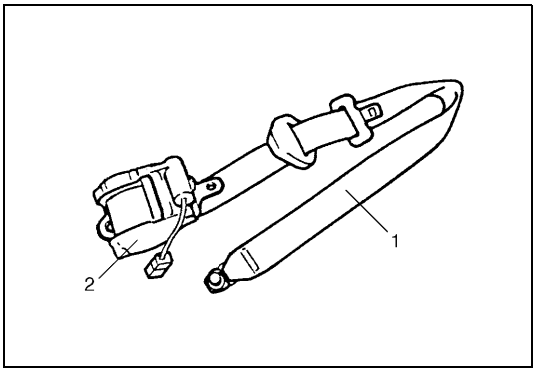

Special care is necessary when handling and storing a live (inactivated) seat belt pretensioners.
Also, when the seat belt pretensioners activate, gas is generated and the seat belt (1) is retracted into the retractor assembly (2) quickly.
Note, therefore, that if they activate accidentally, the seat belt pretensioners and other object(s) around them may be thrown through the air.

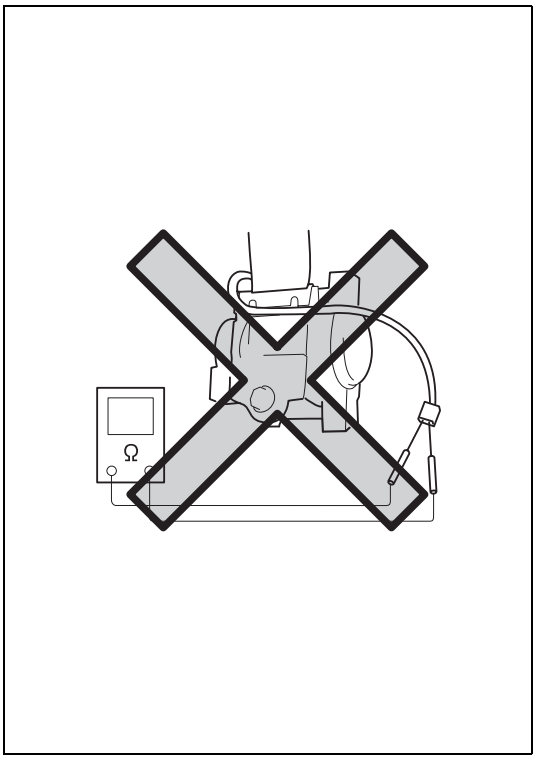

WARNING:

Never attempt to measure the resistance of the seat belt pretensioners. It is very dangerous as the electric current from the tester may activate pretensioner.

- Never attempt to disassemble the seat belt pretensioners (retractor assembly).
- If any abnormality is found, be sure to replace it with new one as an assembly.
- When an abnormality is noted as existing in the live (inactivated) seat belt pretensioner, be sure to activate it before discarding it.
- When grease, cleaning agent oil, water, etc., got on the seat belt pretensioners (retractor assembly), wipe it off immediately with a dry cloth.
- If seat belt pretensioner was dropped from a height of 30 cm (1 ft) or more, it should be replaced with a new one as an assembly.

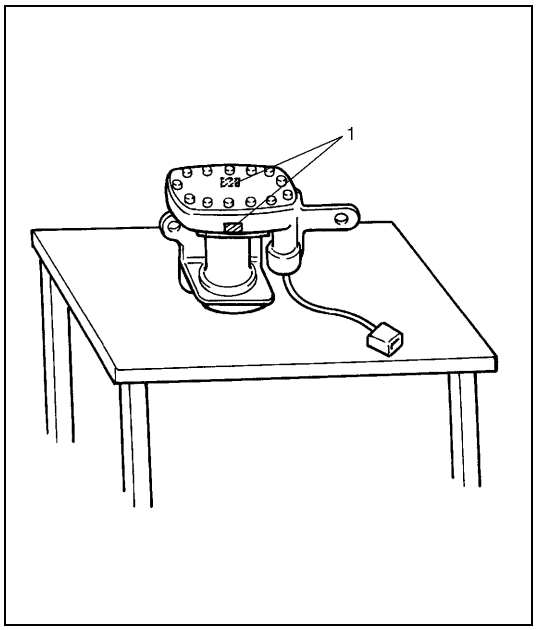

WARNING:

- **For handling and storage of a live seat belt pretensioner, select a place where the ambient temperature below 65°C (150°F), without high humidity and away from electric noise.**
- **Never carry the seat belt pretensioner by the wire or connector of the pretensioner.**
- **When placing a live seat belt pretensioner on the workbench or other surface, be sure not to lay it with its exhaust hole (1) provided side facing down. It is also prohibited to put something on its face with an exhaust hole (1) or to put a seat belt pretensioner on top of another.**

Otherwise, personal injury may result.

DEPLOYED AIR BAG (INFLATOR) MODULE AND ACTIVATED SEAT BELT PRETENSIONER

WARNING:

- **The air bag (inflator) module and seat belt pretensioner immediately after deployment/activation is very hot. Wait for at least 30 minutes to cool it off before proceeding the work.**
- **Do not apply water, oil, etc. to deployed air bag (inflator) module and to activate seat belt pretensioner.**
- **After an air bag (inflator) module has been deployed, the surface of the air bag may contain a powdery residue. This powder consists primarily of cornstarch (used to lubricate the bag as it inflates) and by-products of the chemical reaction. As with many service procedures, gloves and safety glasses should be worn.**
- **Wash your hands with mild soap and water after completing the work.**

Refer to the procedure described under “DEPLOYED AIR BAG (INFLATOR) MODULE AND ACTIVATED SEAT BELT PRETENSIONER DISPOSAL”.

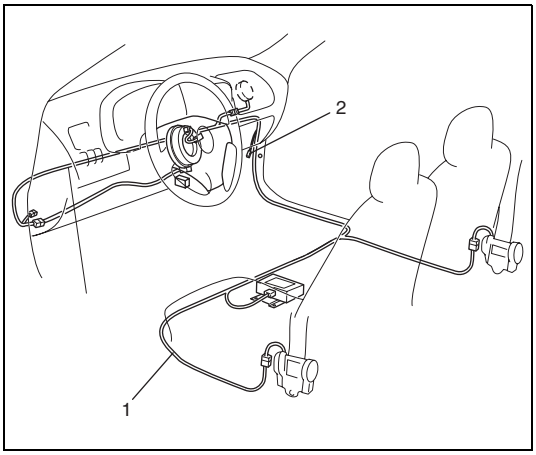

AIR BAG WIRE HARNESS AND CONNECTOR

Air bag wire harness (1) can be identified easily as it is covered with a yellow protection tube. Be very careful when handling it.

- When an open in air bag wire harness (1), damaged wire harness, connector or terminal is found, replace wire harness, connectors and terminals as an assembly.
- When installing it, be careful so that the air bag wire harness (1) is not caught or does not interfere with other parts.
- Make sure all air bag system grounding points (2) are clean and grounds are securely fastened for optimum metal-to-metal contact. Poor grounding can cause intermittent problems that are difficult to diagnose.

DISPOSAL

Do not dispose of the live (undeployed) air bag (inflator) modules and the live (inactivated) seat belt pretensioners. When disposal is necessary, be sure to deploy/activate the air bag and seat belt pretensioner according to deployment/activation procedure described in “AIR BAG (INFLATOR) MODULE AND SEAT BELT PRETENSIONER DISPOSAL”.

WARNING:

Failure to follow proper air bag (inflator) module and seat belt pretensioner disposal procedures can result in air bag deployment and pretensioner activation which could cause personal injury. Undeployed air bag (inflator) module and inactivated seat belt pretensioner must not be disposed of through normal refuse channels.

The undeployed air bag (inflator) module and inactivated seat belt pretensioner contain substances that can cause severe illness or personal injury if the sealed container is damaged during disposal.

REPAIRS AND INSPECTIONS REQUIRED AFTER AN ACCIDENT

CAUTION:

- **All air bag system components, including the electrical harness (component mounting points), must be inspected after an accident. If any components are damaged or bent, they must be replaced even if air bag system activation did not occur.**
- **Never use air bag system parts from another vehicle.**
- **Do not attempt to service the parts below. Service of these parts is by replacement only.**
  - **– Driver/Passenger air bag (inflator) module, Driver/Passenger seat belt pretensioner**
  - **– SDM**
  - **– Contact coil and combination switch assembly**
  - **– Air bag wire harness**
- **Proper operation of the air bag system requires that any repairs to the vehicle structure return it to its original production configuration.**

CAUTION:

After detecting one time of such collision as to meet deployment conditions, the SDM must not be used. Refer to "AIR BAG DIAGNOSTIC SYSTEM CHECK" when checking the SDM.

ACCIDENT WITH DEPLOYMENT/ACTIVATION - COMPONENT REPLACEMENT

The following components must be replaced.

- Driver and passenger air bag (inflator) modules
- Driver and passenger seat belt pretensioners
- SDM
  - – Replace with new one as an assembly.

ACCIDENT WITH OR WITHOUT DEPLOYMENT/ACTIVATION - COMPONENT INSPECTIONS

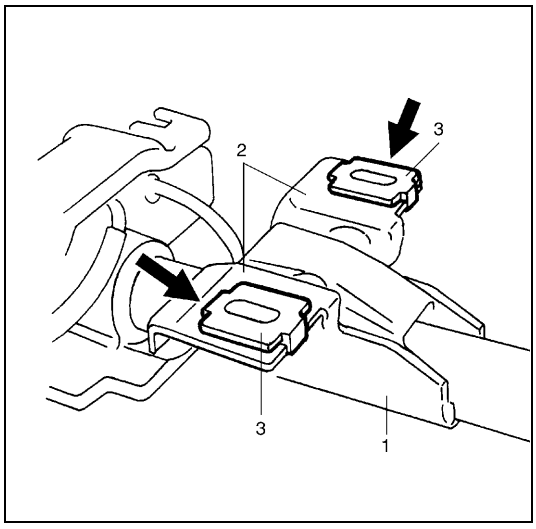

Certain air bag system components must be inspected after any crash, whether the air bag system activated or not.

Those components are :

- Steering column (1) and shaft joints
  - – Check for length, damage and bend according to "CHECKING STEERING COLUMN FOR ACCIDENT DAMAGE" in SECTION 3C.

If any faulty condition is found in above checks, replace faulty part.

- Steering column bracket (2) and capsules (3)
  - – Check for damage and bent.

If any faulty condition is found in above checks, replace faulty part.

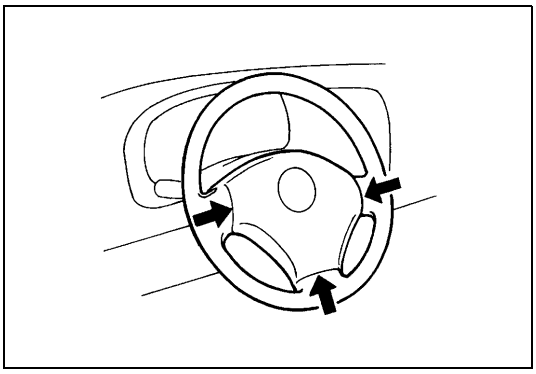

- Steering wheel and driver air bag (inflator) module
  - Check for damage or air bag (inflator) module fitness.
  - Check trim cover (pad surface) for cracks.
  - Check wire harness and connector for damage or tightness.

If any faulty condition is found in above checks, replace faulty part.

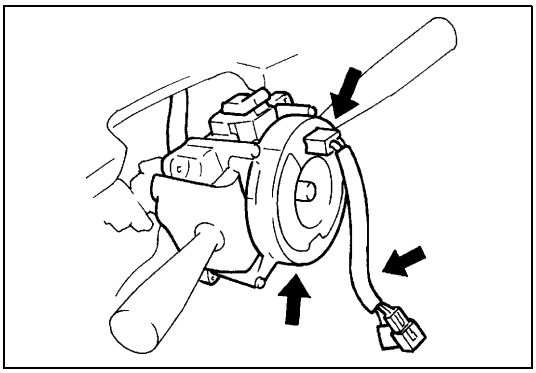

- Contact coil and combination switch assembly
  - Check wire harness and connectors for damage or tightness.
  - Check contact coil case for damage.

If any faulty condition is found in above checks, replace.

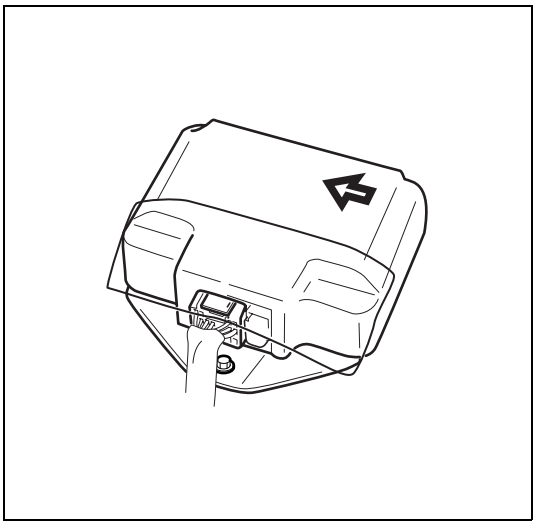

- SDM and SDM plate
  - Check for external damage such as deformation, scratch, crack, peeled paint, etc.
  - Check that SDM cannot be installed properly due to a cause in itself. (There is a gap between SDM and SDM plate, or it cannot be fixed securely.)
  - Check that connector or lead wire of SDM has a scorching, melting or damage.
  - Check SDM connector and terminals for tightness.
  - Check SDM sets a diagnostic trouble code (Refer to “DTC CHECK”.) and the diagnostic table leads to a malfunctioning SDM.

If any faulty condition is found in above checks, replace.

- Instrument panel member and reinforcement
  - Check for any distortion, bending, cracking or other damage.

If any faulty condition is found in above checks, replace.

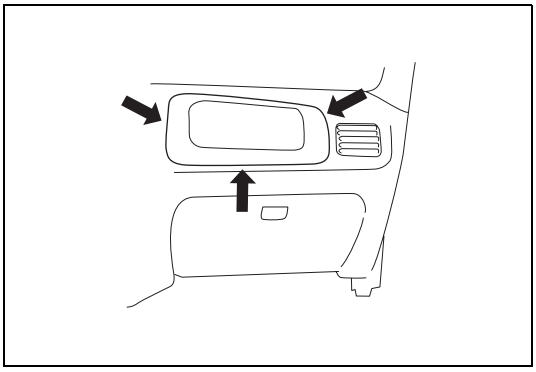

- Passenger air bag (inflator) module
  - Check for dents, cracks, damage or fitness.
  - Check trim cover for cracks or deformities.
  - Check harness and connector for damage or tightness.

If any faulty condition is found in above checks, replace.

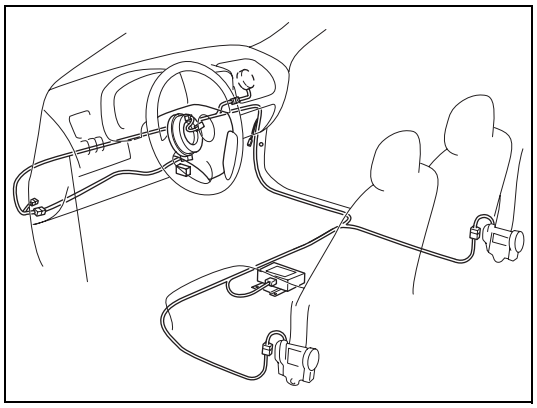

- Air bag wire harness and connections
  - Check for damages, deformities or poor connections. (Refer to “INTERMITTENTS AND POOR CONNECTIONS”.)
  - Check wire harness clamps for tightness.

If any faulty condition is found, correct or replace.

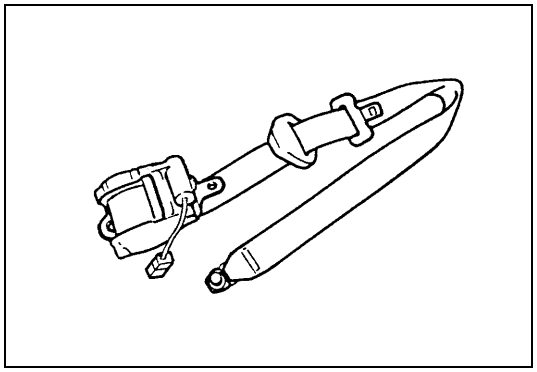

- Seat belt pretensioner
  - Check for dents, cracks, damage or fitness
  - Check harness and connector for damage or tightness.

If any faulty condition is found in above checks, replace.

- Seat belts and mounting points
  - Refer to “FRONT SEAT BELT WITH PRETENSIONER” in SECTION 10.
- “AIR BAG” warning lamp
  - After vehicle is completely repaired, perform “AIR BAG DIAGNOSTIC SYSTEM CHECK”.

SDM

WARNING:

During service procedures, be very careful when handling a Sensing and Diagnostic Module (SDM).
Be sure to read "SERVICE PRECAUTIONS" before starting to work and observe every precaution during work. Neglecting them may result in personal injury or inactivation of the air bag system when necessary.

REMOVAL

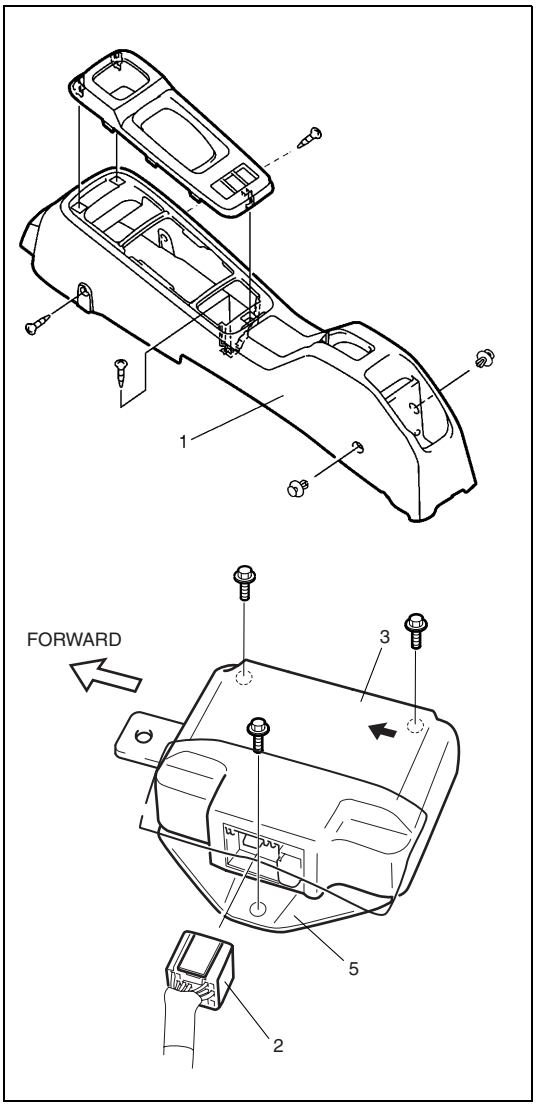

1) Disconnect negative cable at battery.
2) Disable air bag system. Refer to "DISABLING AIR BAG SYSTEM" of "SERVICE PRECAUTIONS".
3) Remove center console boxes (1) by removing screws and clips.
4) Disconnect SDM connector (2) from SDM (3).
5) Remove SDM (3) (with SDM plate (5)) as an assembly from vehicle.

CAUTION:

Do not separate SDM (3) and SDM plate (5).

INSPECTION

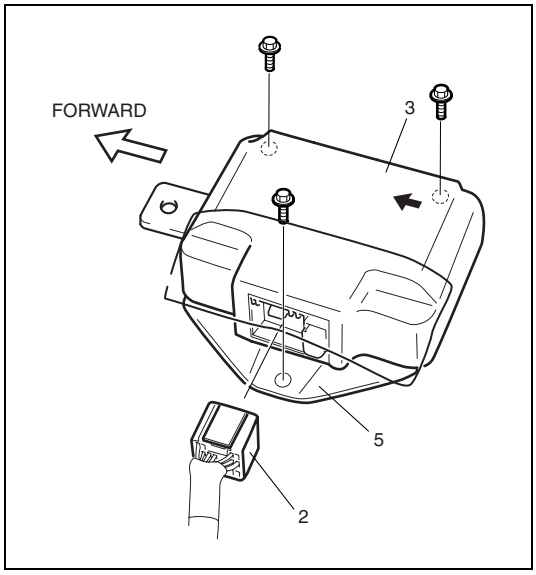

CAUTION:
- **Do not connect a tester whatever type it may be.**
- **Never repair or disassemble SDM (3).**
- **If SDM has been dropped, or if there are cracks, dents or other defects in the case or plate, replace it with a new one.**

- Check SDM (3) and SDM plate (5) for dents, cracks or deformation.
- Check SDM connector (2) for damage, cracks or lock mechanism.
- Check SDM terminal for bent, corrosion or rust.

If any faulty condition is found in above checks, replace.

INSTALLATION

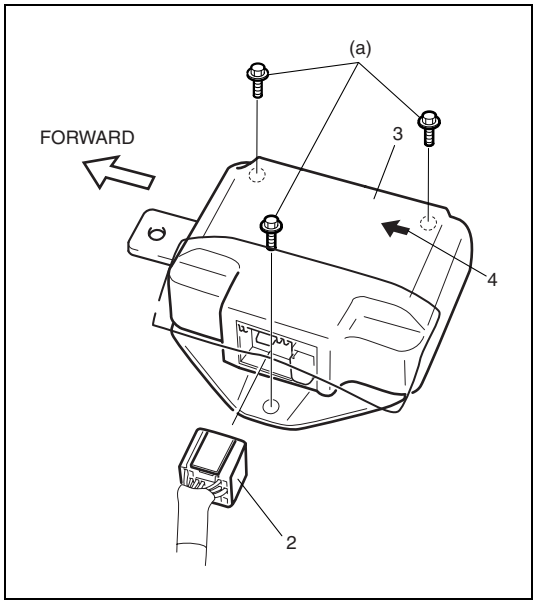

For installation, reverse removal procedure, nothing following points.
- Ensure that arrow (4) on the SDM (3) is pointing toward the front of the vehicle.
- Tighten SDM bolts to specified torque.

Tightening torque
SDM mounting bolt (a) : 6 N·m (0.6 kg-m, 4.5 lb-ft)

- Connect SDM connector (2) to SDM (3) securely.
- Enable air bag system. Refer to “ENABLING AIR BAG SYSTEM”.

PASSENGER AIR BAG (INFLATOR) MODULE (IF EQUIPPED)

WARNING:

- **Never attempt to disassemble or repair the passenger air bag (inflator) module. If any abnormality is found, be sure to replace it with new one as an assembly.**
- **Be sure to read "SERVICE PRECAUTIONS" before starting to work and observe every precaution during work. Neglecting them may result in personal injury or undeployment of the air bag when necessary.**

REMOVAL

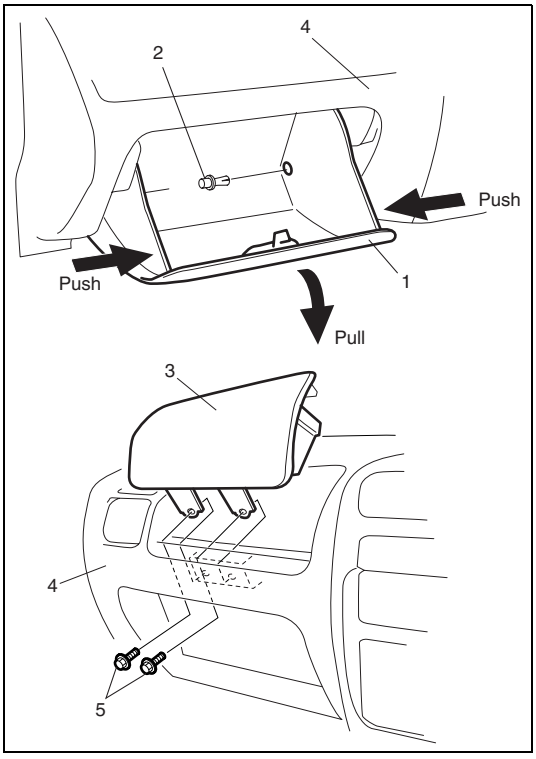

1) Disconnect negative cable at battery.
2) Open glove box (1), then while pressing glove box stopper, pull out glove box (1) from instrument panel (4) and then remove glove box clip (2) and glove box (1) from instrument panel (4).
3) Disable air bag system. Refer to "DISABLING AIR BAG SYSTEM".
4) Remove passenger air bag (inflator) module (3) attaching bolts (5) and passenger air bag (inflator) module (3) from vehicle.

INSPECTION

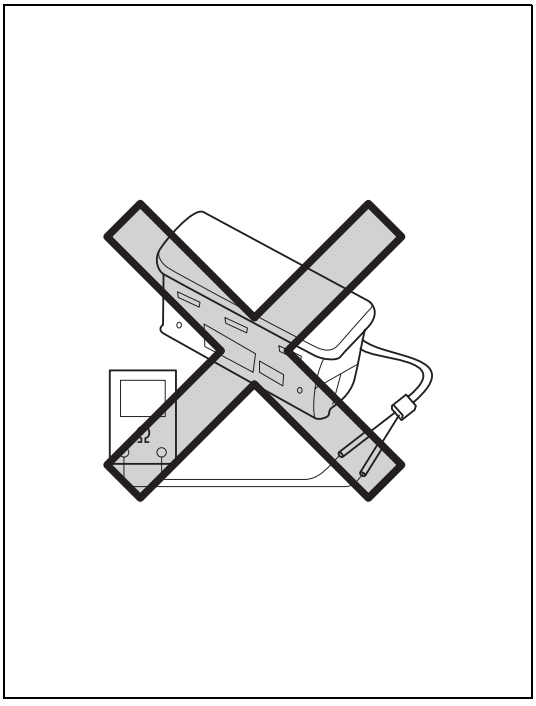

WARNING:

Never measure resistance of passenger air bag (inflator) module or disassemble it. Otherwise personal injury may result.

CAUTION:

If air bag (Inflator) module was dropped from a height or 90 cm (3 ft) or more, it should be replaced.

Check air bag (inflator) module appearance visually for following symptoms and if any one of them is applicable, replace with a new one.

- Air bag has deployed.
- There is a crack in trim cover (pad surface).
- Wire harness or connector is damaged.
- Air bag (inflator) module is damaged or a strong impact was applied to it.

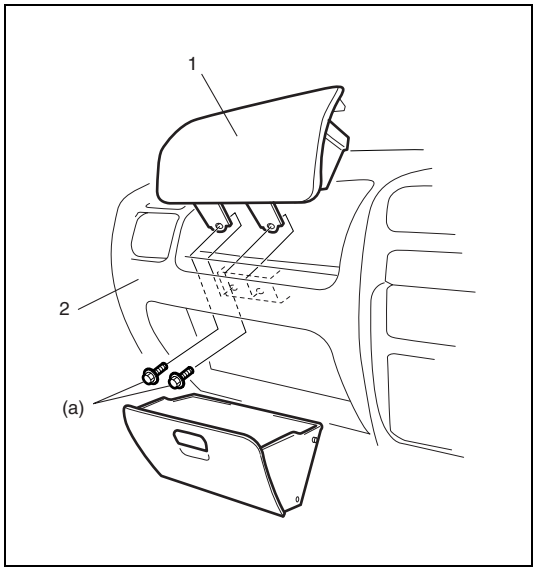

INSTALLATION

1) Install passenger air bag (inflator) module (1) to instrument panel (2).
2) Tighten passenger air bag (inflator) module attaching bolts to specified torque.

Tightening torque
Passenger air bag (inflator) module mounting bolt
(a) : 23 N·m (2.3 kg-m, 16.5 lb-ft)

3) Connect negative cable to battery.
4) Enable air bag system. Refer to “ENABLING AIR BAG SYSTEM”.

DRIVER AIR BAG (INFLATOR) MODULE

Refer to “DRIVER AIR BAG (INFLATOR) MODULE” in SECTION 3C for removal, inspection and installation.

CONTACT COIL AND COMBINATION SWITCH ASSEMBLY

Refer to “CONTACT COIL AND COMBINATION SWITCH ASSEMBLY” in SECTION 3C for removal, inspection and installation.

SEAT BELT PRETENSIONER (IF EQUIPPED)

Refer to “FRONT SEAT BELT WITH PRETENSIONER” in SECTION 10 for removal, inspection and installation.

AIR BAG (INFLATOR) MODULE AND SEAT BELT PRETENSIONER DISPOSAL

WARNING:

Failure to follow proper air bag (inflator) module and seat belt pretensioner disposal procedures can result in air bag deployment and pretensioner activation which may cause personal injury.
Undeployed air bag (inflator) module/inactivated seat belt pretensioner must not be disposed of through normal refuse channels.
The undeployed air bag (inflator) module and inactivated seat belt pretensioner contain substances that can cause severe illness or personal injury if the sealed container is damaged during disposal.

Do not dispose of the live (undeployed) air bag (inflator) modules and seat belt pretensioners.
The method employed depends upon the final disposition of the particular vehicle, as noted in “DEPLOYMENT/ ACTIVATION OUTSIDE VEHICLE” and “DEPLOYMENT/ACTIVATION INSIDE VEHICLE”.

Deployment/Activation Outside Vehicle :
Follow this procedure when disposing of the air bag (inflator) module(s) and seat belt pretensioner(s) only (i.e., the vehicle itself will be used again).

Deployment/Activation Inside Vehicle :
Follow this procedure when scrapping the entire vehicle including the air bag (inflator) modules and seat belt pretensioners.

WARNING:

Following precautions must be observed for this work. Failure to observe any of them may result in personal injury.

- **The procedure should be followed strictly as described here.**
- **Be sure to read “SERVICE PRECAUTIONS” beforehand.**
- **To avoid an accidental deployment, this work should be performed by no more than one person.**
- **Since the smoke is produced when air bag is deployed and pretensioner is activated, select a well-ventilated area.**
- **The air bag (inflator) module and seat belt pretensioner will immediately deploy/activate when a power source is connected to it. Wear safety glasses throughout this entire deployment/activation and disposal procedure.**
- **Wear suitable ear protection when deploying air bag/activating pretensioner. Also, advise those who are in the area close to deployment/activation site to wear suitable ear protection.**
- **Do not deploy/activate two or more air bag system components (air bag (inflator) modules and seat belt pretensioners) at the same time.**
- **Never connect deployment harness to any power source before connecting deployment harness to the air bag (inflator) module and seat belt pretensioner. Deployment harness shall remain shorted and not be connected to a power source until the air bag is to be deployed and the pretensioner is to be activated.**

DEPLOYMENT/ACTIVATION OUTSIDE VEHICLE

Use this procedure when the vehicle itself is used again (only the air bag (inflator) module(s) and seat belt pretensioner(s) are disposed).

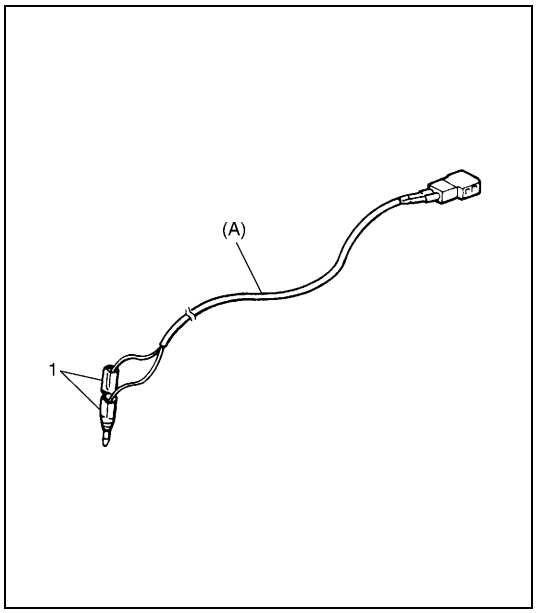

1) Turn ignition switch to “LOCK”, position remove key and put on safety glasses.
2) Check that there is no open, short or damage in special tool (deployment harness). If any faulty is found, do not use it and be sure to use new deployment harness.

Special tool
(A) : 09932-75030

3) Short (1) the two deployment harness leads together by fully seating one banana plug into the other.

WARNING:
Deployment harness shall remain shorted and not be connected to a power source until the air bag is to be deployed and seat belt pretensioner is to be activated.

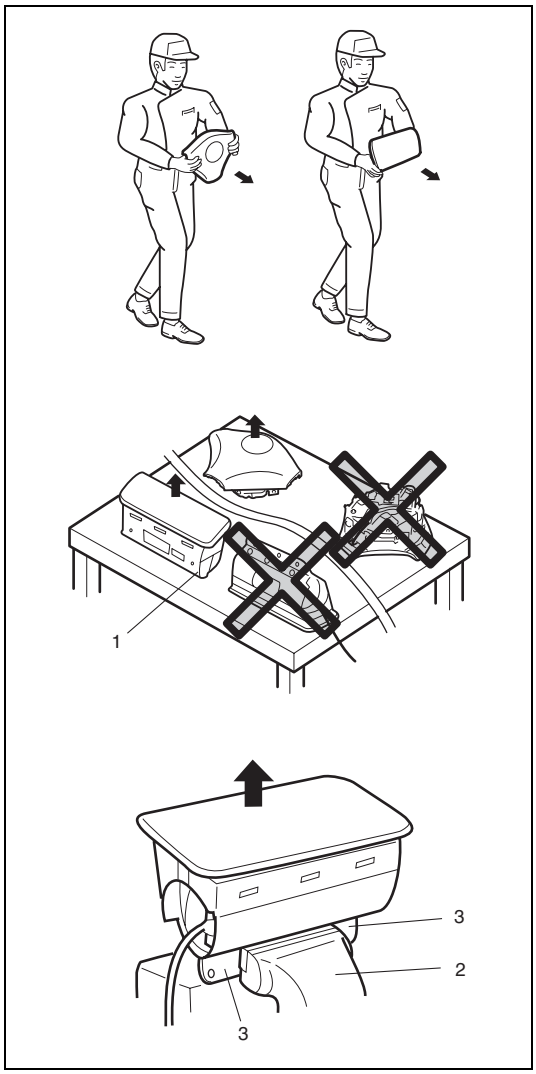

4) Remove air bag (inflator) module(s) and seat belt pretensioner(s) from vehicle, referring to SECTION 3C, 10B and 10.

WARNING:
- **Always carry live air bag (inflator) module with trim cover away from you.**
- **When storing a live air bag (inflator) module or when leaving a live air bag (inflator) module unattended on a bench or other surface, always face the bag and trim cover up and away from the surface. As the live passenger air bag (inflator) module must be placed with its bag (trim cover) facing up, place it on the workbench with a slit (1) or use the workbench vise (2) to hold it securely at its lower mounting bracket (3).**
  This is necessary so that a free space is provided to allow the air bag to expand in the unlikely event of accidental deployment.

Failure to follow procedures may result in personal injury.

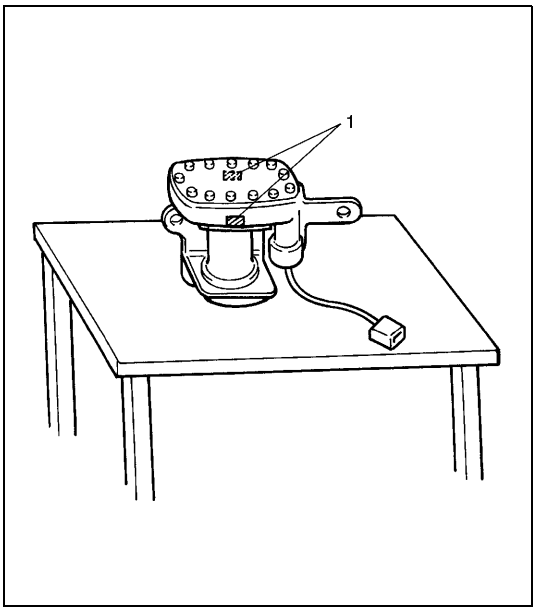

WARNING:

- **For handing and storage of a live seat belt pretensioner, select a place where the ambient temperature below 65°C (150°F), without high humidity and away from electric noise.**
- **Never carry the seat belt pretensioner by the wire or connector of the pretensioner.**
- **When placing a live seat belt pretensioner on the workbench or other surface, be sure not to lay it with its exhaust hole provided side facing down. It is also prohibited to put something on its face with an exhaust hole or to put a seat belt pretensioner on top of another.**

Otherwise, personal injury may result.

5) Set air bag (inflator) module or seat belt pretensioner as follows.

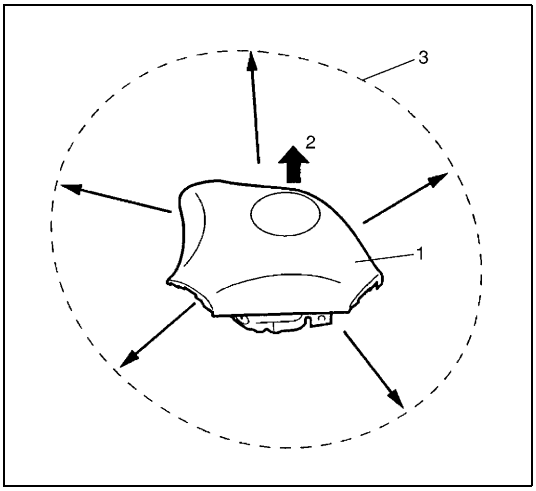

[In case of driver air bag (inflator) module]

a) Clear a space on the ground about 185 cm (6 ft) (3) in diameter where the driver air bag (inflator) module (1) is to be deployed. A paved, outdoor location where there is no activity is preferred. If an outdoor location is not available, a space on the shop floor where there is no activity and sufficient ventilation is recommended.
   Ensure no loose or flammable objects are within the deployment area.
b) Place the driver air bag (inflator) module (1), with its vinyl trim cover facing up (2), on the ground in the space just cleared.

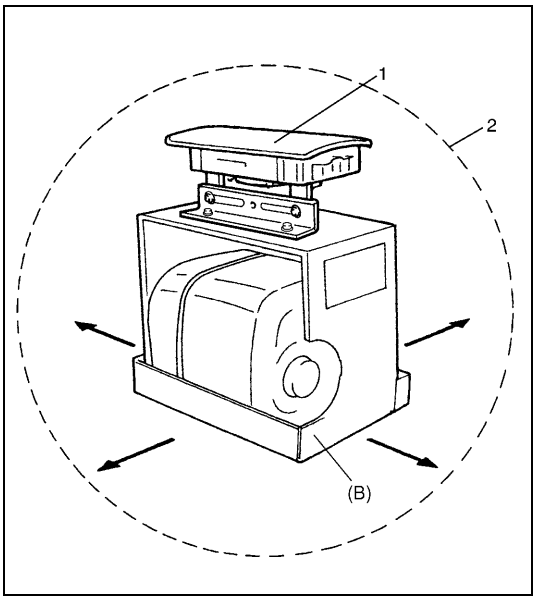

[In case of passenger air bag (inflator) module]

a) Clear a space on the ground about 185 cm (6 ft) (2) in diameter where the fixture (special tool) with attached air bag (inflator) module (1) is to be placed for deployment. A paved outdoor location where there is no activity is preferred. If an outdoor location is not available, a space on the shop floor where there is no activity and sufficient ventilation is recommended. Ensure that no loose or flammable objects are within the deployment area.
b) Place special tool (passenger air bag (inflator) module deployment fixture) on the ground in the space cleared in step a), if it has not already been placed there.

Special tool
(B) : 09932-75041

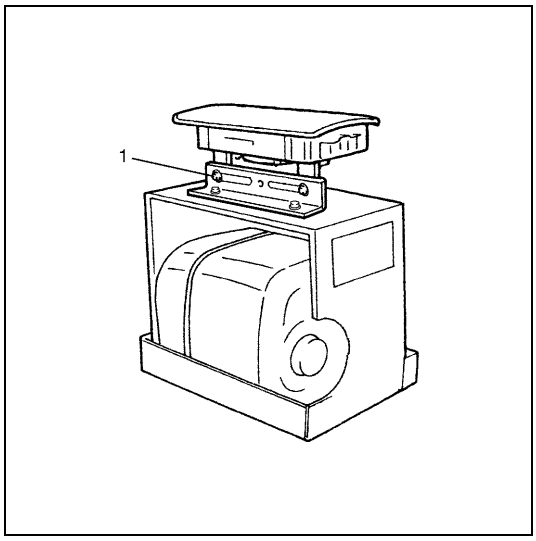

c) Fill plastic reservoir in fixture (special tool) with water or sand. This is necessary to provide sufficient stabilization of the fixture during deployment.
d) Attach the passenger air bag (inflator) module in the fixture (special tool) using mounting attachment, hold-down bolts and nuts and M8 bolts and nuts (3).

CAUTION:
Be sure to use the following bolt and nut for fixing passenger air bag (inflator) module to mounting attachment.
Size : M8, Strength : 7T

Securely hand-tighten all fastener prior to deployment.

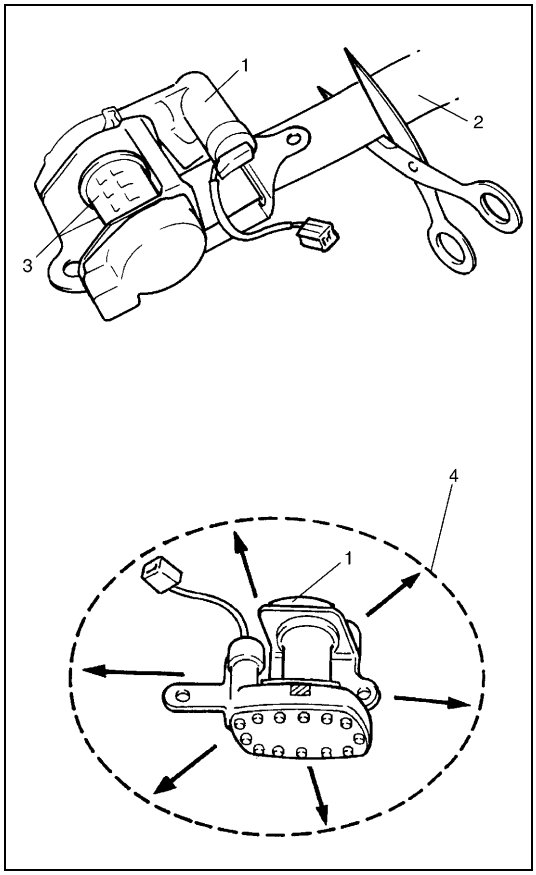

[In case of seat belt pretensioner]
a) Pull out the webbing (2) fully as shown in the figure and cut it at the root of the pretensioner (retractor assembly) (1) as shown in the figure.

WARNING:
As the drum (3) of the retractor assembly (1) turns very quickly as soon as the webbing (2) is cut, fix the retractor assembly (1) with a vise on the workbench and keep your hands and fingers away from it when cutting the webbing (2).

b) Clear a space on the ground about 185 cm (6 ft) (4) in diameter where the seat belt pretensioner (retractor assembly) (1) is to be activated. A paved, outdoor location where there is no activity is preferred. If an outdoor location is not available, a space on the shop floor where there is no activity and sufficient ventilation is recommended.
Ensure no loose or flammable objects are within the activation area.
c) Place the seat belt pretensioner (retractor assembly) (1) as shown in the figure on the ground in the space just cleared.

For Driver Air Bag (Inflator) Module

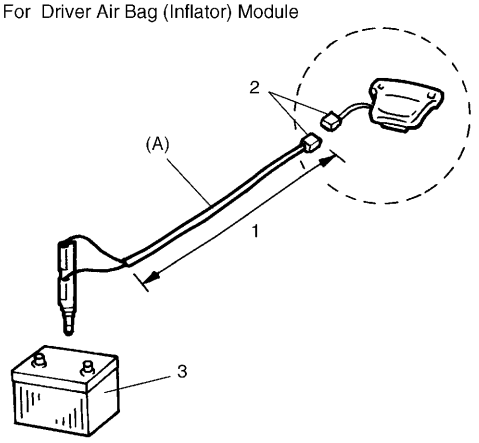

For Passenger Air Bag (Inflator) Module

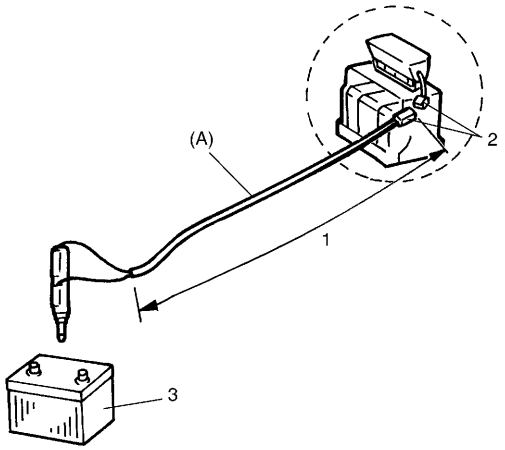

For Seat Belt Pretensioner

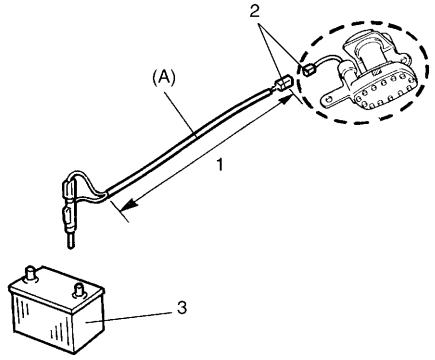

6) Stretch the deployment harness from the driver or passenger air bag (inflator) module to its full length 10 m (33 ft) (1).

Special tool
(A) : 09932-75030

7) Place a power source (3) near the shorted end of the deployment harness. Recommended application: 12 Volts minimum, 2 amps minimum. A vehicle battery is suggested.
8) Verify that the area around the air bag (inflator) module or seat belt pretensioner is clear of all people and loose or flammable objects.
9) Verify setting condition of air bag (inflator) module or pretensioner as follows.
   [In case of driver air bag (inflater) module]
   Verify that the driver air bag (inflator) module is resting with its vinyl trim cover facing up.
   [In case of passenger air bag (inflator) module]
   Verify that the passenger air bag (inflator) module is firmly and properly secured in passenger air bag (inflator) module deployment fixture (special tool).
   [In case of seat belt pretensioner]
   Verify that the seat belt pretensioner, is placed as shown in the figure on the ground in the space just cleared.
10) Connect (2) the air bag (inflator) module or seat belt pretensioner to the deployment harness connector and lock connector with lock lever.
11) Notify all people in the immediate area that you intend to deploy/activate the air bag (inflator) module or seat belt pretensioner.

NOTE:

- **When the air bag deploys and the pretensioner activates, the rapid gas expansion will create a substantial report. Wear suitable ear protection. Notify all people in the immediate area that you intend to deploy the air bag (inflator) module or activate the seat belt pretensioner and suitable ear protection should be worn.**
- **When the driver air bag deploys and the pretensioner activates, driver air bag (inflator) module and pretensioner (retractor assembly) may jump about 30 cm (1 ft) vertically. This is a normal reaction of them to the force of the rapid gas expansion inside the air bag and pretensioner.**
- **After the air bag (inflator) module has been deployed, the surface of the air bag may contain a powdery residue. This powder consists primarily of cornstarch (used to lubricate the bag as it inflates) and by-products of the chemical reaction.**

WARNING:

- **After deployment/activation, the metal surfaces of the air bag (inflator) module and the seat belt pretensioner will be very hot. Do not touch the metal areas of them for about 30 minutes after deployment/activation.**
- **Do not place the deployed air bag (inflator) module and the activated seat belt pretensioner near any flammable objects.**
- **Do not apply water, oil, etc. to deployed air bag (inflator) module and activated seat belt pretensioner.**
- **If the deployed air bag (inflator) module and the activated seat belt pretensioner must be moved before it is cool, wear gloves and handle it by using nonmetal material such as the air bag, webbing and vinyl trim.**

Failure to follow procedures may result in fire or personal injury.

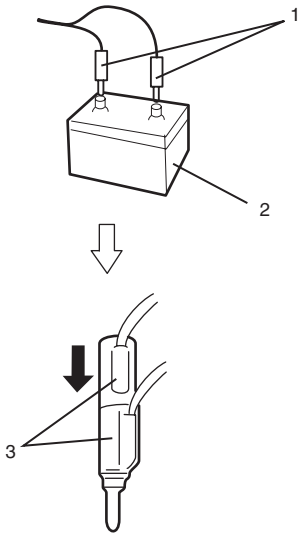

12) Separate (1) the two banana plugs on the deployment harness.
13) Connect the deployment harness to the power source (12V vehicle battery) (2) to immediately deploy/activate the air bag or seat belt pretensioner.
14) Disconnect the deployment harness from power source (12V vehicle battery) (2) and short (3) the two deployment harness leads together by fully seating one banana plug into the other.
15) In the unlikely event that the air bag (inflator) module or seat belt pretensioner did not deploy/activate after following these procedures, proceed immediately with Steps 20) through 23). If the air bag (inflator) module or the seat belt pretensioner did deploy/activate, proceed with Steps 16) through 19).

16) Put on a pair of shop gloves to protect your hands from possible irritation and heat when handling the deployed air bag (inflator) module and the activated seat belt pretensioner.
17) Disconnect the deployment harness from the air bag (inflator) module and the seat belt pretensioner as soon after deployment/activation as possible.
    This will prevent damage to the deployment harness due to possible contact with the hot air bag (inflator) module and seat belt pretentioner. The deployment harness are designed to be reused. They should, however, be inspected for damage after each deployment/activation and replaced it if necessary.

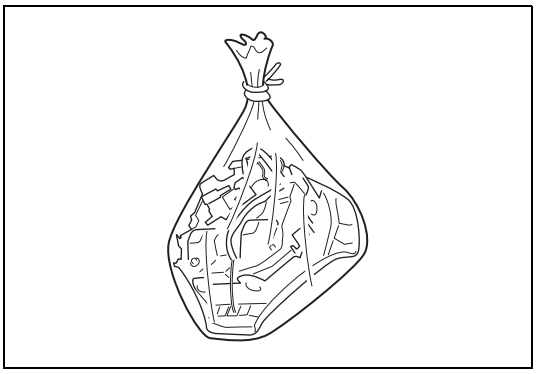

18) Dispose of the deployed air bag (inflator) module and the activated seat belt pretensioner through normal refuse channels after it has cooled for at least 10 minutes and tightly seal the air bag (inflator) module and the seat belt pretensioner in a strong vinyl bag. (Refer to “DEPLOYED AIR BAG (INFLATOR) MODULE AND ACTIVATED SEAT BELT PRETENSIONER DISPOSAL” in detail.)
19) Wash your hands with mild soap and water afterward.

NOTE:

The remaining steps are to be followed in the unlikely event that the air bag (inflator) module did not deploy or the seat belt pretensioner did not activate after following these procedures.

20) Ensure that the deployment harness has been disconnected from the power source and that its two banana plugs have been shorted together by fully seating one banana plug into the other.
21) Disconnect the deployment harness from the air bag (inflator) module and the seat belt pretensioner.
22) Temporarily store air bag (inflator) module or seat belt pretensioner.
    [For driver and passenger air bag (inflator) modules]
    Temporarily store the air bag (inflator) module with its vinyl trim cover facing up, away from the surface upon which it rests. Refer to “SERVICE PRECAUTIONS” for details.
    [For seat belt pretensioner]
    When temporarily strong the seat belt pretensioner, be sure NOT to face its exhaust hole provided side down. It must face up. Refer to “SERVICE PRECAUTIONS” for details.
23) Contact your local distributor for further assistance.

DEPLOYMENT/ACTIVATION INSIDE VEHICLE

For Driver Air Bag (Inflator) Module

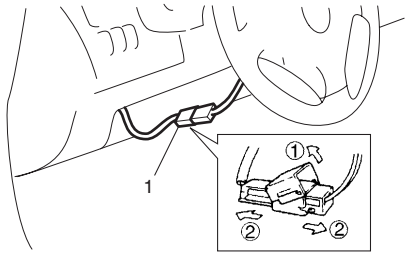

For Passenger Air Bag (Inflator) Module

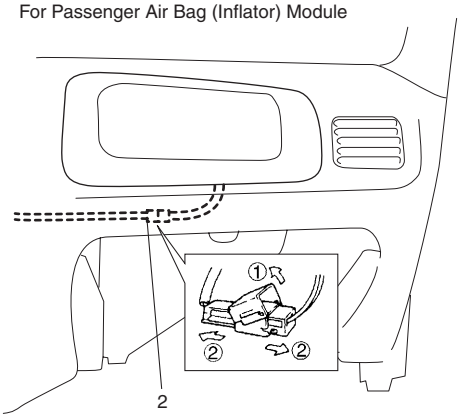

For Seat Belt Pretensioner

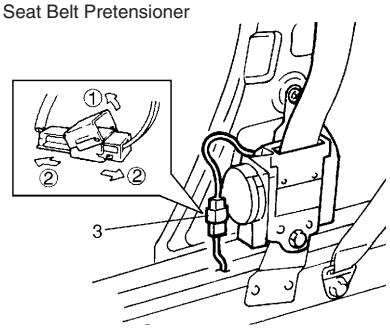

Use this procedure when scrapping the entire vehicle including the air bag (inflator) modules and seat belt pretensioners.

CAUTION:

When vehicle itself will be used again, deploy/activate the air bag and pretensioner outside vehicle according to "DEPLOYMENT/ACTIVATION OUTSIDE VEHICLE", for deploying/activating it inside will cause the instrument panel, glove box and their vicinity to be deformed. Failure to observe this CAUTION may require unneeded vehicle inspection and repair.

1) Turn ignition switch to "LOCK" position, remove key and put on safety glasses.
2) Remove all loose objects from front seats and instrument panel.
3) [For driver air bag (inflator) module]
   Disconnect contact coil connector (1) located near the base of the steering column.
   [For passenger air bag (inflator) module]
   Remove glove box from instrument panel and disconnect passenger air bag (inflator) module connector (2).
   [For seat belt pretensioner]
   Remove both side (driver and passenger side) center pillar lower trim and disconnect seat belt pretensioner connectors (3).
4) Confirm that each air bag (inflator) module is securely mounted.

For Driver Air Bag (inflator) Module

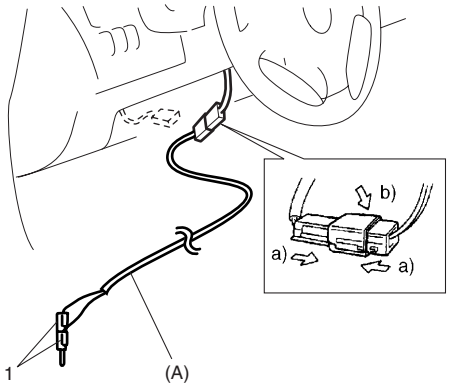

5) Check that there is no open, short or damage in special tool (deployment harness). If any faulty condition is found, do not use it and be sure to use new deployment harness.

   Special tool
   (A) : 09932-75030

6) Short (1) the two deployment harness leads together by fully seating one banana plug into the other.

WARNING:

Deployment harness shall remain shorted and not be connected to a power source until the air bag is to be deployed and seat belt pretensioner is to be activated.

7) Connect deployment harness connector to air bag (inflator) module (driver or passenger) or seat belt pretensioner (driver or passenger) and lock connector with lock lever.
   a) Connect connector.
   b) Lock connector with lock lever.

Driver side for left hand steering vehicle

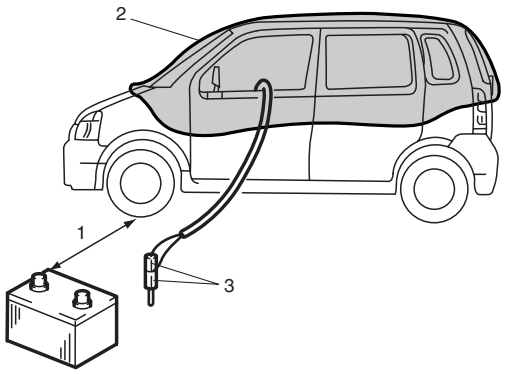

Driver side for right hand steering vehicle

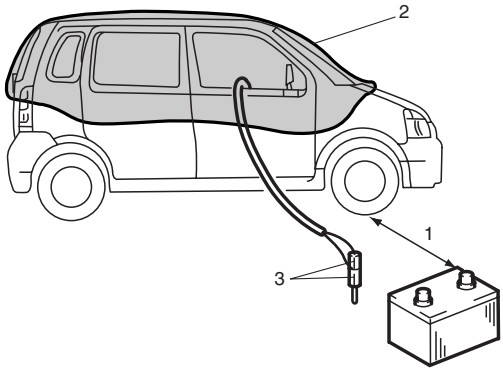

8) Route deployment harness out the vehicle.
9) Verify that the inside of the vehicle and the area surrounding the vehicle are clear of all people and loose or flammable objects.
10) Stretch the deployment harness to its full length 10 m (33 ft) (1).

Special tool
(A) : 09932-75030

11) Place a power source near the shorted end (3) of the deployment harness. Recommended application: 12 Volts minimum, 2 amps minimum. A vehicle battery is suggested.
12) Completely cover windshield area and front door window openings with a drop cloth, blanket to similar item (2). This reduces the possibility of injury due to possible fragmentation of the vehicle's glass or interior.
13) Notify all people in the immediate area that you intend to deploy the air bag (inflator) module or activate the seat belt pretensioner.

NOTE:

- **When the air bag deploys and the pretensioner activates, the rapid gas expansion will create a substantial report. Wear suitable ear protection. Notify all people in the immediate area that you intend to deploy the air bag (inflator) module or to activate the seat belt pretensioner and suitable ear protection should be worn.**
- **After the air bag (inflator) module has been deployed, the surface of the air bag may contain a powdery residue. This powder consists primarily of cornstarch (used to lubricate the bag as it inflates) and by-products of the chemical reaction.**

WARNING:

- **After deployment/activation, the metal surfaces of the air bag (inflator) module and the seat belt pretensioner will be very hot. Do not touch the metal areas of them for about 30 minutes after deployment/activation.**
- **Do not apply water, oil, etc. to deployed air bag (inflator) module and activated seat belt pretensioner. Failure to follow procedures may result in fire or personal injury.**

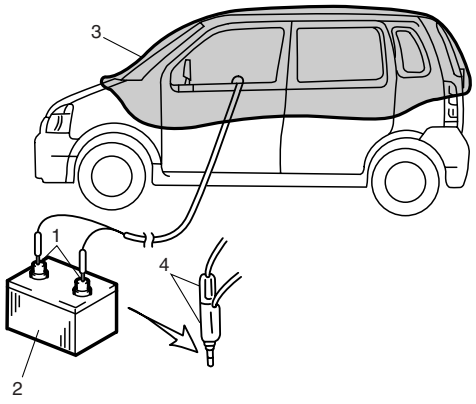

14) Separate the two banana plugs on the deployment harness.
15) Connect (1) the deployment harness to the power source (12 V vehicle battery) (2) to immediately deploy/activate the air bag or the pretensioner.
16) Disconnect the deployment harness from the power source (12 V vehicle battery) (2) and short (4) the two deployment harness leads together by fully seating one banana plug into the other.
17) Put on a pair of shop gloves to protect your hands from possible irritation and heat when handling the deployed air bag (inflator) module and the activated seat belt pretensioner.
18) Disconnect the deployment harness from the air bag (inflator) module and the seat belt pretensioner as soon after deployment/activation as possible.
    This will prevent damage to the deployment harness due to possible contact with the hot air bag (inflator) module and seat belt pretensioner. The deployment harness are designed to be reused. They should, however, be inspected for damage after each deployment/activation and replaced it if necessary.
19) Carefully remove drop cloth (3) from vehicle and clean off any fragments or discard it entirely.
20) Repeat Steps 2) through 19) to deploy/activate air bag (inflator) modules and seat belt pretensioners which has not been deployed/activated, if any.
21) In the unlikely event that the air bag (inflator) module and the seat belt pretensioner proceed immediately with Steps 23) through 25). If the air bag (inflator) module and the seat belt pretensioner did deploy/activate, proceed with Steps 22).

22) With air bags deployed and pretensioners activated the vehicle may be scrapped in the same manner as a non-air bag system equipped vehicle.
23) Remove the undeployed air bag (inflator) module(s) and the inactivated seat belt pretensioner(s) from the vehicle. For driver air bag (inflator) module refer to SECTION 3C, for passenger air bag (inflator) module refer to “ON-VEHICLE SERVICE”, for seat belt pretensioner refer to SECTION 10.
24) [For air bag (inflator) module]
    Temporarily store the air bag (inflator) module with its vinyl trim cover facing up, away from the surface upon which it rests. Refer to “SERVICE PRECAUTIONS” for details.
    [For seat belt pretensioner]
    When temporarily strong the seat belt pretensioner, be sure NOT to face its exhaust hole provided side down. It must face up. Refer to “SERVICE PRECAUTIONS” for details.
25) Contact your local distributor for further assistance.

DEPLOYED AIR BAG (INFLATOR) MODULE AND ACTIVATED SEAT BELT PRETENSIONER DISPOSAL

WARNING:

Failure to follow proper air bag (inflator) module and seat belt pretensioner disposal procedures can result in air bag deployment and pretensioner activation which may cause personal injury. The undeployed air bag (inflator) module and the inactivated seat belt pretensioner must not be disposed of through normal refuse channels.

The undeployed air bag (inflator) module and the inactivated seat belt pretensioner contains substances that can cause severe illness or personal injury if the sealed container is damaged during disposal.

Deployed air bag (inflator) module and the activated seat belt pretensioner can be disposed of through normal refuse channels just like any other parts. For their disposal, however, following points should be noted.

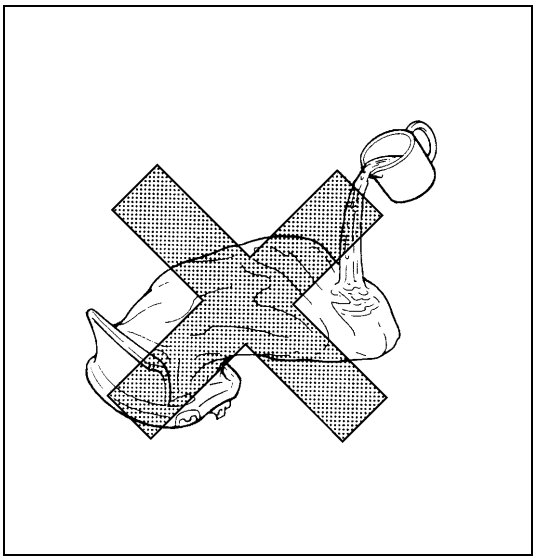

- The air bag (inflator) module and the seat belt pretensioner immediately after deployment/activation is very hot. Wait for 30 minutes to cool it off before handling it.
- Never apply water, oil, etc. to deployed air bag (inflator) module and the activated seat belt pretensioner to cool it off and be careful so that water, oil etc. does not get on the deployed air bag (inflator) module and the activated seat belt pretensioner.
- After the air bag (inflator) module has been deployed, the surface of the air bag may contain a powdery residue. This powder consists primarily of cornstarch (used to lubricate the bag as it inflates) and by-products of the chemical reaction. As with many service procedures, you should wear gloves and safety glasses.

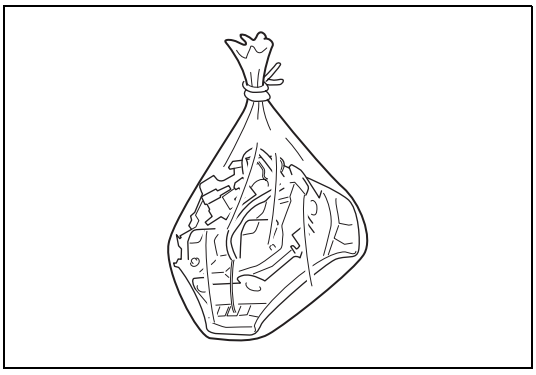

- When disposing of the deployed air bag (inflator) module and the activated seat belt pretensioner, be sure to seal it in a vinyl bag.
- When air bag (inflator) module and seat belt pretensioner have been deployed/activated inside the vehicle which is going to be scrapped, leave them as installed to the vehicle.
- Be sure to wash your hands with mild soap and water after handling it.

SPECIAL TOOL

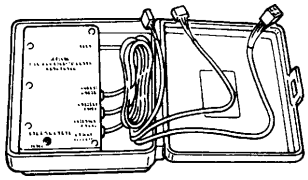 09932-75010 Air bag driver/passenger load tool	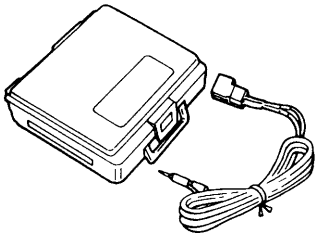 09932-75030 Air bag deployment harness	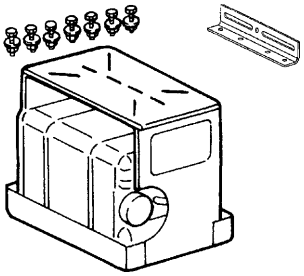 09932-75041 Passenger air bag (inflator) module deployment fixture	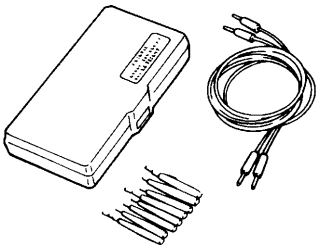 09932-76010 Connector test adapter kit
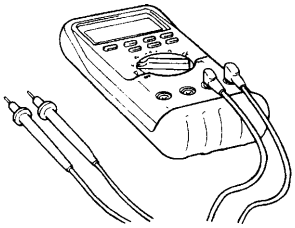 Digital multimeter (See NOTE “B” and WARNING.)	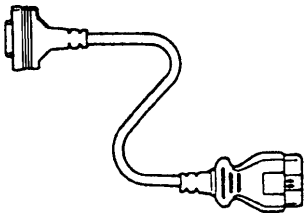 09931-76030 16/14 pin DLC cable	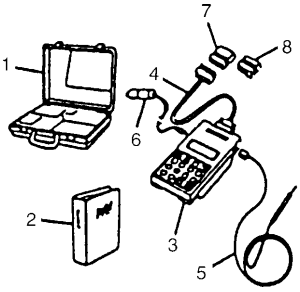 09931-76011 Tech 1A kit (See NOTE “A”.)	

WARNING:

Be sure to use the specified digital multimeter. Otherwise, air bag deployment or personal injury may result.

NOTE:

- **“A” : This kit includes the following items.**
  1. Storage case, 2. Operator’s manual, 3. Tech 1A, 4. DLC cable, 5. Test lead/probe, 6. Power 7. DLC cable adapter , 8. Self-test adapter
- **“B” : Digital multimeter specification : The maximum test current is 10 mA or less at the minimum range of resistance measurement.**

Prepared by
SUZUKI MOTOR CORPORATION
Overseas Service Department

1st Ed. July, 2000

Printed in Japan

Printing: 1148

IMPORTANT

WARNING/CAUTION/NOTE

Please read this manual and follow its instructions carefully. To emphasize special information, the words **WARNING, CAUTION** and **NOTE** have special meanings. Pay special attention to the messages highlighted by these signal words.

WARNING:
Indicates a potential hazard that could result in death or injury.

CAUTION:
Indicates a potential hazard that could result in vehicle damage.

NOTE:
Indicates special information to make maintenance easier or instructions clearer.

WARNING:
This service manual is intended for authorized Suzuki dealers and qualified service technicians only. Inexperienced technicians or technicians without the proper tools and equipment may not be able to properly perform the services described in this manual.
Improper repair may result in injury to the technician and may render the vehicle unsafe for the driver and passengers.

WARNING:
For vehicles equipped with a Supplemental Restraint (Air Bag) System:

- **Service on and around the air bag system components or wiring must be performed only by an authorized SUZUKI dealer. Refer to "Air Bag System Components and Wiring Location View" under "General Description" in air bag system section in order to confirm whether you are performing service on or near the air bag system components or wiring. Please observe all WARNINGS and "Service Precautions" under "On-Vehicle Service" in air bag system section before performing service on or around the air bag system components or wiring. Failure to follow WARNINGS could result in unintentional activation of the system or could render the system inoperative. Either of these two conditions may result in severe injury.**
- **If the air bag system and another vehicle system both need repair, Suzuki recommends that the air bag system be repaired first, to help avoid unintended air bag system activation.**
- **Do not modify the steering wheel, instrument panel or any other air bag system component (on or around air bag system components or wiring). Modifications can adversely affect air bag system performance and lead to injury.**
- **If the vehicle will be exposed to temperatures over 93°C (200°F) (for example, during a paint baking process), remove the air bag system components beforehand to avoid component damage or unintended activation.**

The circle with a slash in this manual means "Do not do this" or "Do not let this happen".

Foreword

This SUPPLEMENTARY SERVICE MANUAL is a supplement to IGNIS (RM413) SERVICE MANUAL. It has been prepared exclusively for the following applicable model.

Applicable model: IGNIS with M15 petrol engine (RM415)/IGNIS with Z13DT diesel engine (RM413D)

It describes only different service information of the above applicable model as compared with IGNIS (RM413) SERVICE MANUAL. Therefore, whenever servicing the above applicable model, consult this supplement first. And for any section, item or description not found in this supplement, refer to the related service manuals below.

When replacing parts or servicing by disassembling, it is recommended to use SUZUKI genuine parts, tools and service materials (lubricant, sealants, etc.) as specified in each description.

All information, illustrations and specifications contained in this literature are based on the latest product information available at the time of publication approval. And used as the main subject of description is the vehicle of standard specifications among others. Therefore, note that illustrations may differ from the vehicle being actually serviced.
The right is reserved to make changes at any time without notice.

NOTE:
"SUZUKI Dealers" means Authorized SUZUKI Service Workshop (in Europe).

RELATED MANUAL:

Manual Name	Manual No.
IGNIS (RM413) SERVICE MANUAL	99500U86G00-01E
IGNIS (RM413D)/WAGON R+ (RB413D) SUPPLEMENTARY SERVICE MANUAL FOR Z13DT ENGINE AND M/T	99501U86G30-01E
IGNIS (RM413/RM415/RM413D) WIRING DIAGRAM MANUAL	99512U86G20-669

MAGYAR SUZUKI CORPORATION

© COPYRIGHT MAGYAR SUZUKI CORPORATION 2003

TABLE OF CONTENTS

GENERAL INFORMATION	
GENERAL INFORMATION	0A
MAINTENANCE AND LUBRICATION	0B
HEATING AND AIR CONDITIONING	
HEATER AND VENTILATION	1A
AIR CONDITIONING (OPTIONAL)	1B
STEERING, SUSPENSION, WHEELS AND TIRES	
Steering, Suspension, Wheels and Tires *1	3
Front Wheel Alignment *1	3A
MANUAL RACK AND PINION	3B
Electrical Power Steering (P/S) System *1	3B1
Steering Wheel and Column *1	3C
FRONT SUSPENSION	3D
REAR SUSPENSION	3E
WHEELS AND TIRES	3F
DRIVE SHAFT AND PROPELLER SHAFT	
FRONT DRIVE SHAFT	4A
Propeller Shafts *1	4B
BRAKE SYSTEM	
BRAKES	5
BRAKES PIPE / HOSE / MASTER CYLINDER	5A
FRONT BRAKE	5B
PARKING AND REAR BRAKE	5C
Antilock Brake System (ABS) *1	5E
ENGINE	
ENGINE GENERAL INFORMATION AND DIAGNOSIS (M15 ENGINE)	6
Engine General Information and Diagnosis (Z13DT Engine) *2	6-3
ENGINE MECHANICAL (M15 ENGINE)	6A1
Engine Mechanical (Z13DT Engine) *2	6A3
ENGINE COOLING (M15 ENGINE)	6B
Engine Cooling (Z13DT Engine) *2	6B3
Engine Fuel (M15 Engine) *1	6C
Engine Fuel (Z13DT Engine) *2	6C3

ENGINE	
ENGINE AND EMISSION CONTROL SYSTEM (M15 ENGINE)	6E1
Engine and Emission Control System (Z13DT Engine) *2	6E3
Ignition System (Electronic Ignition System) *1	6F1
Cranking System (M15 Engine) *1	6G
Cranking System (Z13DT Engine) *2	6G3
Charging System (M15 Engine) *1	6H
Charging System (Z13DT Engine) *2	6H3
Exhaust System (M15 Engine) *1	6K
Exhaust System (Z13DT Engine) *2	6K3
TRANSMISSION, CLUTCH AND DIFFERENTIAL	
MANUAL TRANSAXLE (M15 ENGINE MODEL)	7A2
Manual Transaxle (Z13DT Engine Model) *2	7A3
AUTOMATIC TRANSAXLE	7B
Clutch (M15 Engine Model) *1	7C1
Clutch (Z13DT Engine Model) *2	7C3
Transfer *1	7D
Rear Differential *1	7F
ELECTRICAL SYSTEM	8
Body Electrical System *1	8
Wiring Diagram *1	8A
Lighting System *1	8B
Instrumentation/Driver Information (M15 Engine Model) *1	8C
INSTRUMENTATION/DRIVER INFORMATION (Z13DT ENGINE MODEL)	8C1
Windows, Mirrors, Security and Locks *1	8D
Immobilizer Control System (M15 Engine Model) *1	8G
IMMOBILIZER CONTROL SYSTEM (Z13DT ENGINE MODEL)	8G3
BODY SERVICE	9
RESTRAINT SYSTEM	
Restraint System *1	10
Air Bag System *1	10B

0A	6E1
0B	6E3
	6F1
1A	6G
1B	6G3
	6H
3	6H3
3A	6K
3B	6K3
3B1	
3C	7A2
3D	7A3
3E	7B
3F	7C1
	7C3
4A	7D
4B	7F
5	8
5A	8A
5B	8B
5C	8C
5E	8C1
	8D
6	8G
6-3	8G3
6A1	9
6A3	
6B	10
6B3	10B
6C	
6C3	

NOTE:

- **For the screen toned sections with "*1" in the above table, refer to the same section of the Related Manual "IGNIS (RM413) SERVICE MANUAL" mentioned in FOREWORD of this manual.**
- **For the screen toned sections with "*2" in the above table, refer to the same section of the Related Manual "IGNIS (RM413D)/WAGON R+ (RB413D) SUPPLEMENTARY SERVICE MANUAL FOR Z13DT ENGINE AND M/T" mentioned in FOREWORD of this manual.**

SECTION 0A

GENERAL INFORMATION

NOTE:

For the items with asterisk (*) in the "CONTENTS" below, refer to the same section of the Service Manual mentioned in "Foreword" of this manual.

CONTENTS

How to Use This Manual ..... *
Precautions 0A-2
Precaution for Vehicles Equipped with a Supplemental Restraint (Air Bag) System ..... *
Diagnosis ..... *
Servicing and handling ..... *
General Precautions 0A-2
Precaution for Wheel (with Tire) Removal ..... *
Precautions for Catalytic Converter ..... *
Precaution for Installing Mobile Communication Equipment ..... *
Precaution for CAN Communication System 0A-5
Precaution in Servicing Full-Time 4WD Vehicle ..... *
Precautions for Electrical Circuit Service ..... *
Electrical Circuit Inspection Procedure ..... *
Open circuit check ..... *
Continuity check ..... *
Voltage check ..... *
Short circuit check (wire harness to ground) ..... *
Intermittent and Poor Connection ..... *
Identification Information 0A-5
Vehicle Identification Number 0A-5
Engine Identification Number 0A-6
Transmission Identification Number 0A-6
Warning, Caution and Information Labels ... 0A-7
Vehicle Lifting Points ..... *
When using frame contact hoist ..... *
When using floor jack ..... *
Abbreviations and Symbols May be Used in This Manual 0A-9
Abbreviations 0A-9
Symbols ..... *
Wire Color Symbols ..... *
Fastener Information 0A-11
Metric Fasteners Information 0A-11
Fastener Strength Identification ..... *
Standard Tightening Torque ..... *

Precautions

General Precautions

The WARNING and CAUTION below describe some general precautions that you should observe when servicing a vehicle. These general precautions apply to many of the service procedures described in this manual, and they will not necessarily be repeated with each procedure to which they apply.

WARNING:

- **Whenever raising a vehicle for service, be sure to follow the instructions under "Vehicle Lifting Points" in this section.**
- **When it is necessary to do service work with the engine running, make sure that the parking brake is set fully and the transmission is in Neutral (for manual transmission vehicles) or Park (for automatic transmission vehicles), Keep hands, hair, clothing, tools, etc. away from the fan and belts when the engine is running.**
- **When it is necessary to run the engine indoors, make sure that the exhaust gas is forced outdoors.**
- **Do not perform service work in areas where combustible materials can come in contact with a hot exhaust system. When working with toxic or flammable materials (such as gasoline and refrigerant), make sure that the area you work in is well-ventilated.**
- **To avoid getting burned, keep away from hot metal parts such as the radiator, exhaust manifold, tail pipe, muffler, etc.**
- **New and used engine oil can be hazardous. Children and pets may be harmed by swallowing new or used oil. Keep new and used oil and used engine oil filters away from children and pets.**
  Continuous contact with used engine oil has been found to cause [skin] cancer in laboratory animals. Brief contact with used oil may irritate skin. To minimize your exposure to used engine oil, wear a long-sleeve shirt and moisture-proof gloves (such as dish washing gloves) when changing engine oil. If engine oil contacts your skin, wash thoroughly with soap and water. Launder any clothing or rags if wet with oil, recycle or properly dispose of used oil and filters.
- **Make sure the bonnet is fully closed and latched before driving. If it is not, it can fly up unexpectedly during driving, obstructing your view and resulting in an accident.**

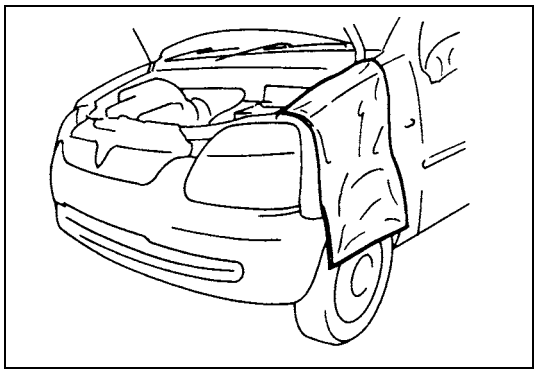

- **Before starting any service work, cover fenders, seats and any other parts that are likely to get scratched or stained during servicing. Also, be aware that what you wear (e.g, buttons) may cause damage to the vehicle's finish.**

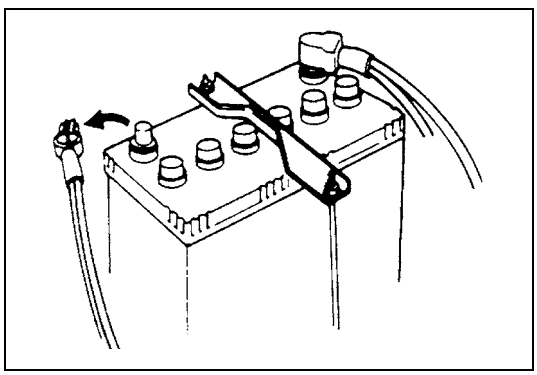

- **When performing service to electrical parts that does not require use of battery power, disconnect the negative cable of the battery.**
- **When disconnecting the battery negative cable, record displayed contents of clock and audio system before disconnecting and reset them as before after connecting.**

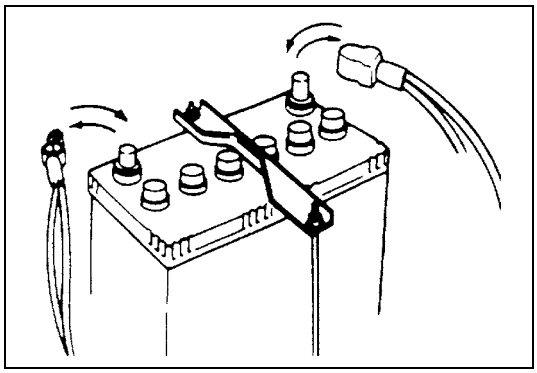

- **When removing the battery, be sure to disconnect the negative cable first and then the positive cable. When reconnecting the battery, connect the positive cable first and then the negative cable, and replace the terminal cover.**

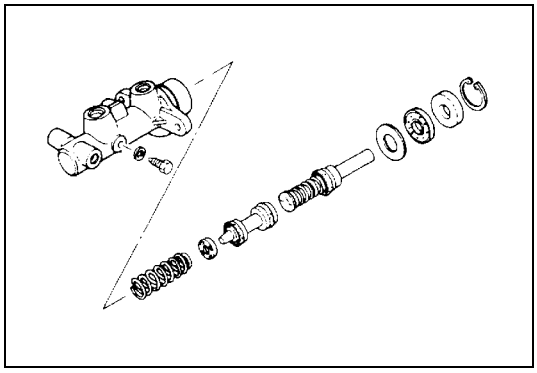

- **When removing parts that are to be reused, be sure to keep them arranged in an orderly manner so that they may be reinstalled in the proper order and position.**

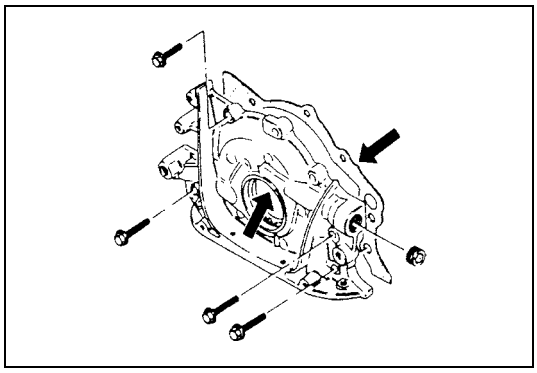

- **Whenever you use oil seals, gaskets, packing, O-rings, locking washers, split pins, self-locking nuts, and certain other parts as specified, be sure to use new ones. Also, before installing new gaskets, packing, etc., be sure to remove any residual material from the mating surfaces.**

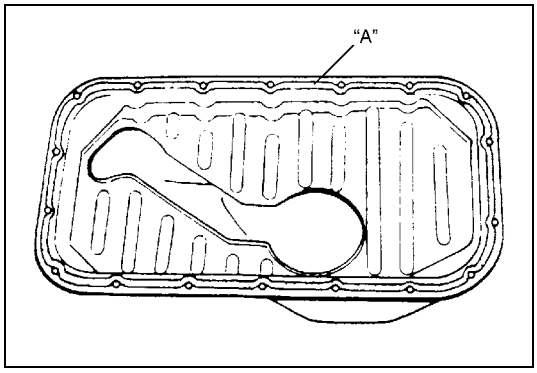

- **Make sure that all parts used in reassembly are perfectly clean.**
  When use of a certain type of lubricant, bond or sealant is specified, be sure to use the specified type.

"A": Sealant 99000-31250

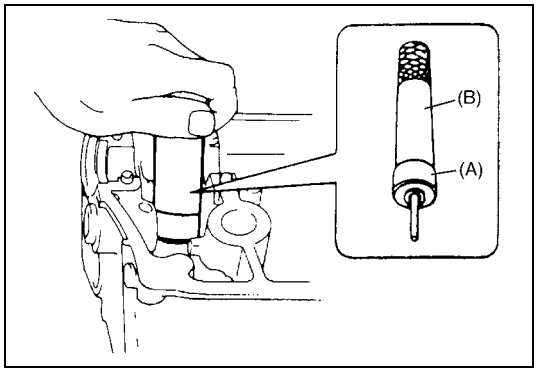

- **Be sure to use special tools when instructed.**

Special tool
(A): 09917-98221
(B): 09916-58210

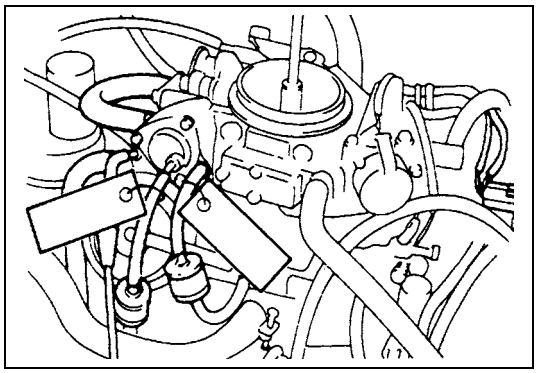

- **When disconnecting vacuum hoses, attach a tag describing the correct installation positions so that the hoses can be reinstalled correctly.**

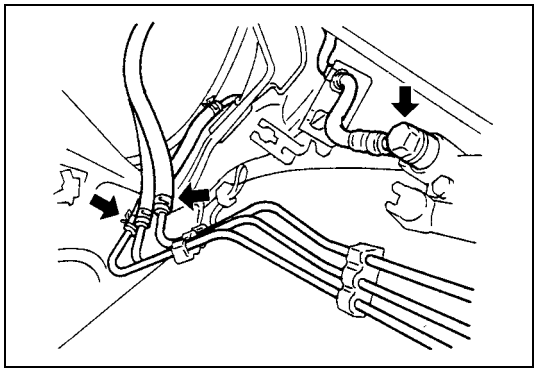

- **After servicing fuel, oil, coolant, vacuum, exhaust or brake systems, check all lines related to the system for leaks.**

- **For vehicles equipped with petrol engine, never disconnect the fuel line between the fuel pump and injector without first releasing the fuel pressure, or fuel can be sprayed out under pressure.**
  Refer to "Fuel Pressure Relief Procedure" in section 6 for fuel pressure releasing.
- **For vehicles equipped with diesel engine, never disconnect fuel line within 60 sec. after ignition switch turned to OFF position, or fuel can be sprayed out under pressure.**

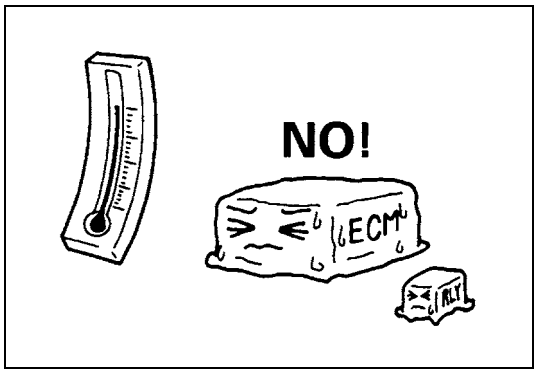

- **When performing a work that produces a heat exceeding 80°C (176°F) in the vicinity of the electrical parts, remove the heat sensitive electrical part(s) beforehand.**

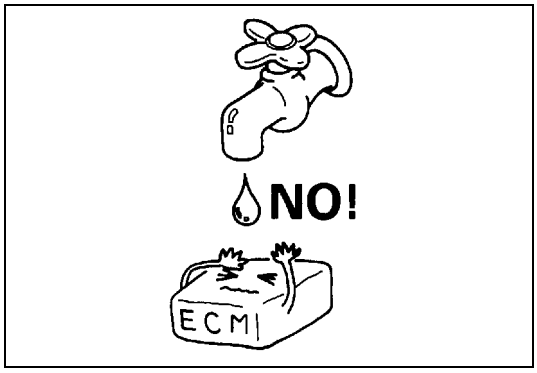

- **Use care not to expose connectors and electrical parts to water which will be a cause of a trouble.**

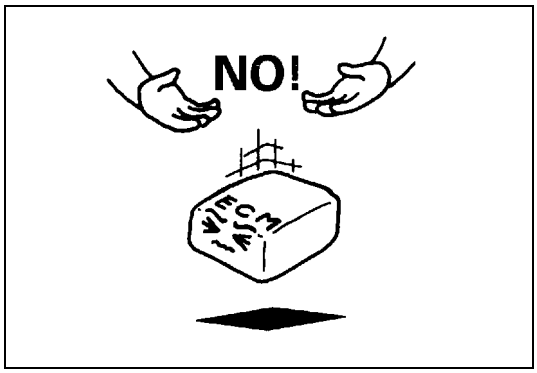

- **Always be careful not to handle electrical parts (computer, relay, etc.) in a rough manner or drop them.**

Precaution for CAN Communication System

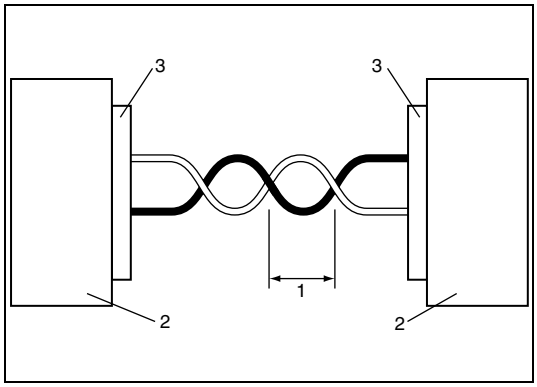

- The loose (1) in the wire harnesses twist of the CAN lines except around the connector (3) should be within 100 mm (3.9 in.) Refer to the wiring diagram for the CAN line discrimination. Excessive loosed lines may be influenced by the electric noise.

2. Controller

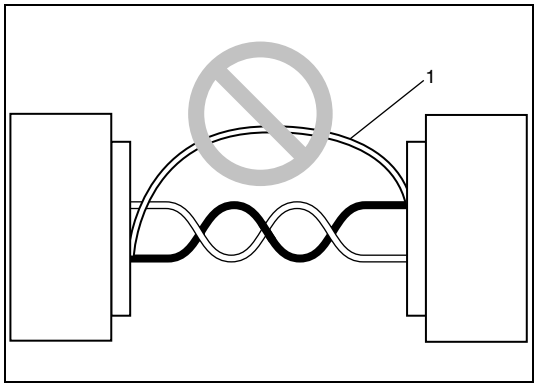

- Do not connect terminals of the CAN line using a bypass wire (1). Otherwise, the CAN line may be influenced by the electric noise.

Identification Information

Vehicle Identification Number

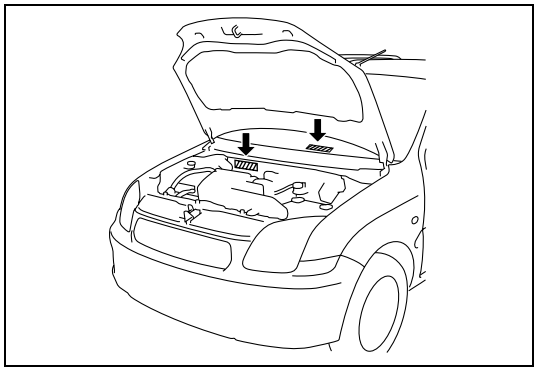

The number is punched on front dash panel in engine room and it is also on the left side of instrument panel depending on the vehicle specification.

Engine Identification Number

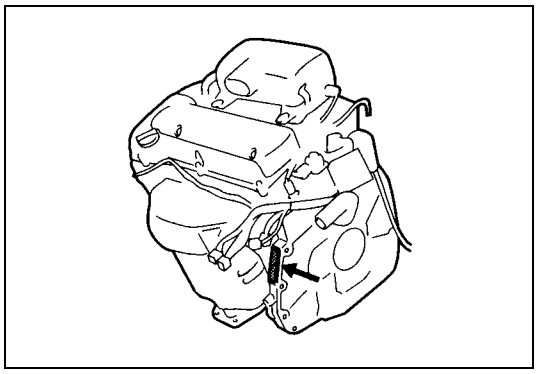

The number is punched on cylinder block.

Transmission Identification Number

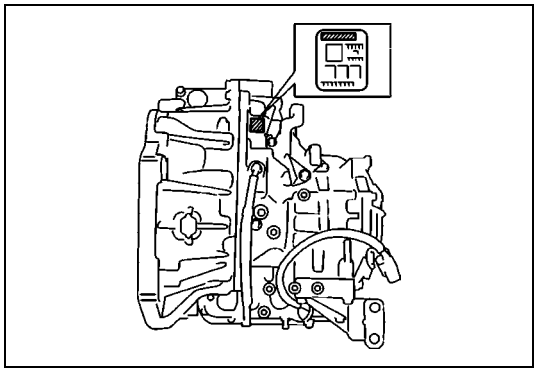

The automatic transmission identification number is located on transmission case.

Warning, Caution and Information Labels

The figure below shows main labels among others that are attached to vehicle component parts.
When servicing and handling parts, refer to WARNING/CAUTION instructions printed on labels.
If any WARNING/CAUTION label is found stained or damaged, clean or replace it as necessary.

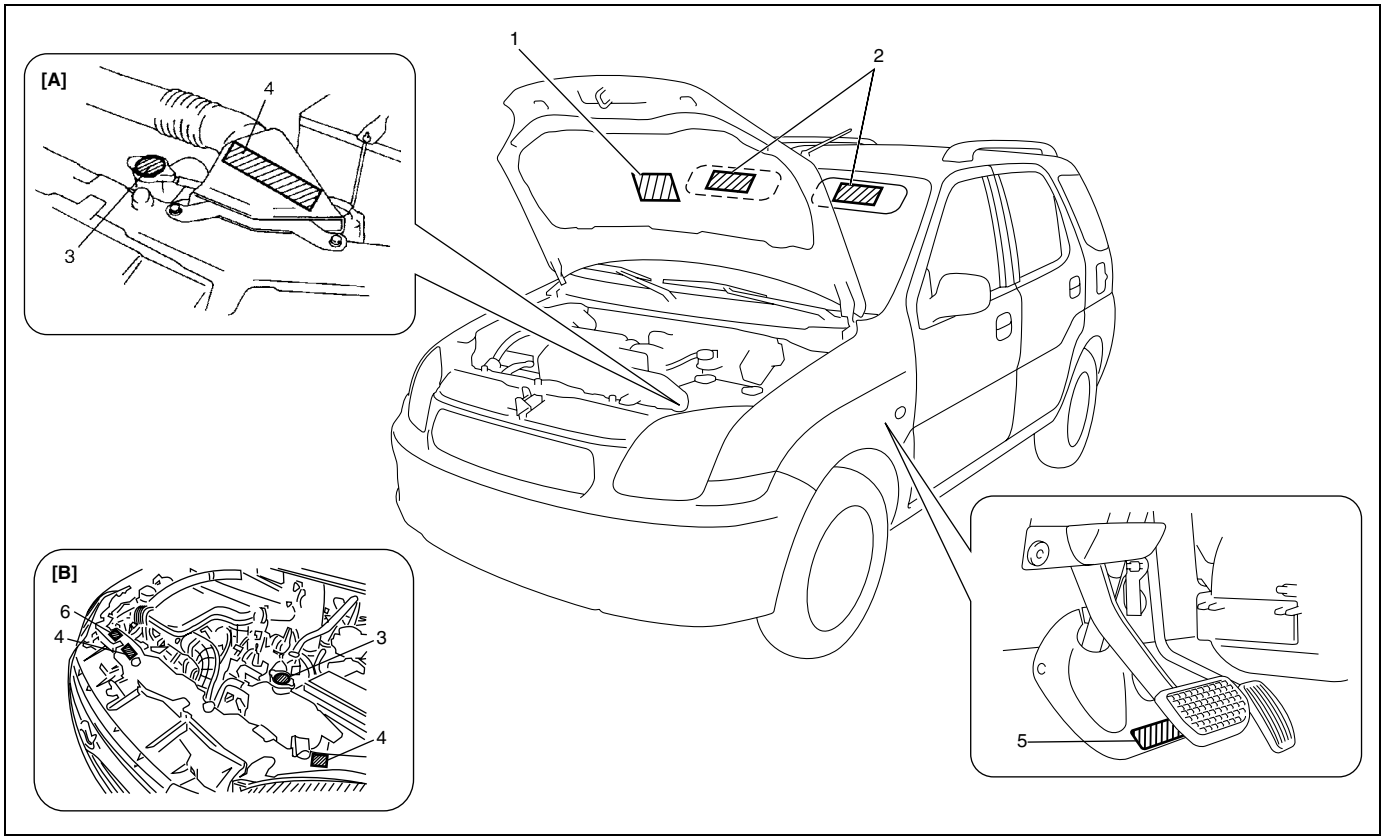

1. Air bag label on back side of engine hood (if equipped)	5. Steering shaft joint cover label (if equipped)
2. Air bag label on sun visor (if equipped)	6. Smoke level label (Z13DT engine)
3. Radiator cap label	[A]: M15 engine model
4. Engine cooling fan label (location is different depending on vehicle specification)	[B]: Z13DT engine model

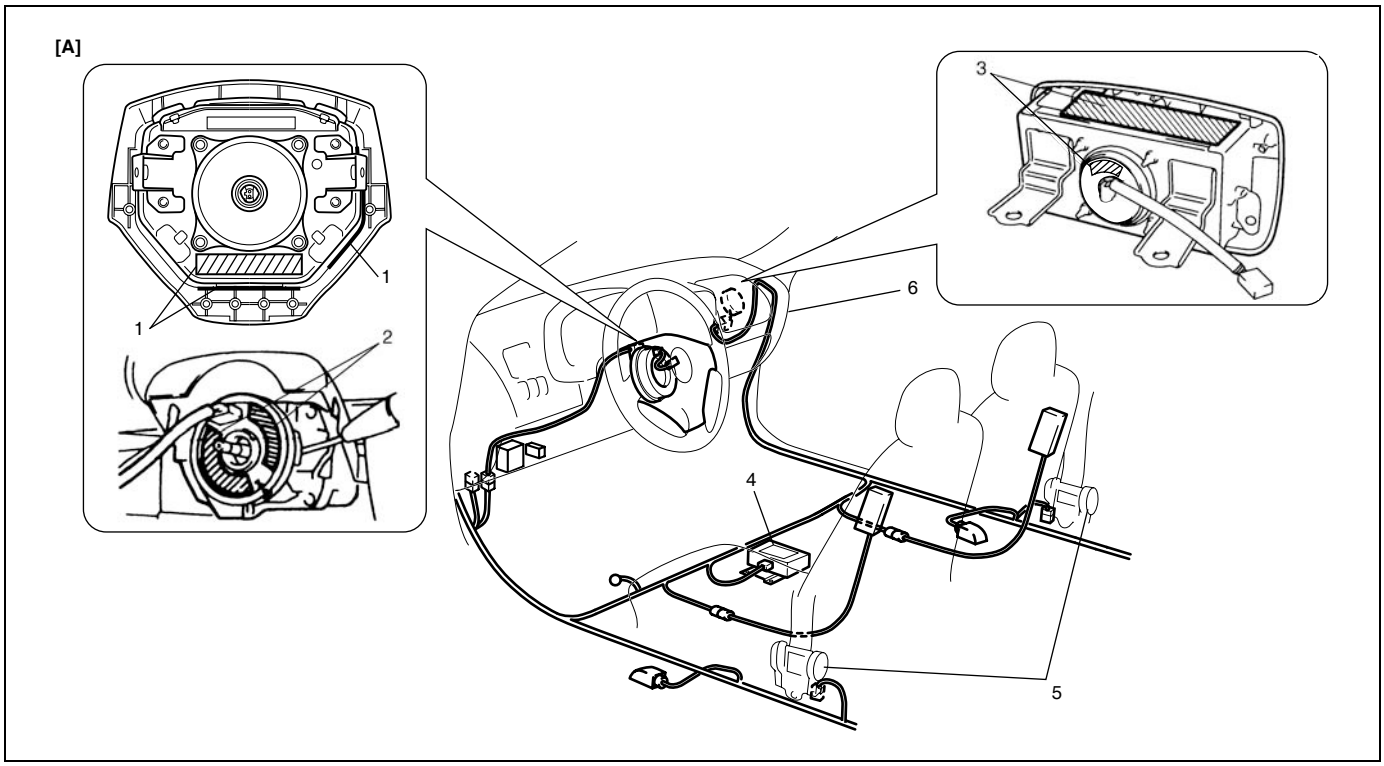

1. Air bag label on driver air bag (inflator) module	5. Pretensioner label on seat belt retractor
2. Air bag label on combination switch and contact coil assembly	6. Child seat label
3. Air bag label on passenger air bag (inflator) module	[A]: These labels are attached on vehicle equipped with air bag system only.
4. Air bag label on SDM	

Abbreviations and Symbols May be Used in This Manual

Abbreviations

A	ABS	Anti-lock Brake System
	ATDC	After Top Dead Center
	API	American Petroleum Institute
	ATF	Automatic Transmission Fluid
	ALR	Automatic Locking Retractor
	AC	Alternating Current
	A/T	Automatic Transmission
	A/C	Air Conditioning
	ABDC	After Bottom Dead Center
	A/F	Air Fuel Mixture Ratio
	A-ELR	Automatic-Emergency Locking Retractor
B	B+	Battery Positive Voltage
	BTDC	Before Top Dead Center
	BBDC	Before Bottom Dead Center
C	CAN	Controller Area Network
	CKT	Circuit
	CKP sensor	Crankshaft Position Sensor
	CMP sensor	Camshaft Position Sensor
	CO	Carbon Monoxide
	CPP switch	Clutch Pedal Position Switch (Clutch Switch, Clutch Start Switch)
	CPU	Central Processing Unit
	CRS	Child Restraint System
D	DC	Direct Current
	DLC	Data Link Connector (Assembly Line Diag. Link, ALDL, Serial Data Link, SDL)
	DOHC	Double Over Head Camshaft
	DOJ	Double Offset Joint
	DRL	Daytime Running Light
	DTC	Diagnostic Trouble Code (Diagnostic Code)
E	EBCM	Electronic Brake Control Module, ABS Control Module
	EBD	Electronic Brake Force Distribution
	ECM	Engine Control Module
	ECT sensor	Engine Coolant Temperature Sensor (Water Temp. Sensor, WTS)
	EGR	Exhaust Gas Recirculation
	EGRT sensor	EGR Temperature Sensor (Recirculated Exhaust Gas Temp. Sensor, REGTS)
	EFE Heater	Early Fuel Evaporation Heater (Positive Temperature Coefficient, PTC Heater)
E	EPS	Electronic Power Steering
	EVAP	Evaporative Emission
	EVAP Canister	Evaporative Emission Canister (Charcoal Canister)
F	4WD	4 Wheel Drive
G	GEN	Generator
	GND	Ground
H	HC	Hydrocarbons
	HO2S	Heated Oxygen Sensor
I	IAC Valve	Idle Air Control Valve (Idle Speed Control Solenoid Valve ISC Solenoid Valve)
	IAT Sensor	Intake Air Temperature Sensor (Air temperature Sensor, ATS)
	ICM	Immobilizer Control Module
	IG	Ignition
	ISC Actuator	Idle Speed Control Actuator
L	LH	Left Hand
	LSPV	Load Sensing Proportioning Valve
M	MAF Sensor	Mass Air Flow Sensor (Air Flow Sensor, AFS, Air Flow Meter, AFM)
	MAP Sensor	Manifold Absolute Pressure Sensor (Pressure Sensor, PS)
	Max	Maximum
	MFI	Multiport Fuel Injection (Multipoint Fuel Injection)
	MIN	Minimum
	MIL	Malfunction Indicator Lamp (“SERVICE ENGINE SOON” Light)
	M/T	Manual Transmission
N	NOx	Nitrogen Oxides
O	OBD	On-Board Diagnostic System (Self-Diagnosis Function)
	O/D	Overdrive
	OHC	Over Head Camshaft
	O2S	Oxygen Sensor
P	PNP	Park/Neutral Position
	P/S	Power Steering

	PSP Switch	Power Steering Pressure Switch (P/S Pressure Switch)
P	PCM	Powertrain Control Module
	PCV	Positive Crankcase Ventilation
	PPS	Pedal Position Sensor
R	RH	Right Hand
	SAE	Society of Automotive Engineers
	SDM	Sensing and Diagnostic Module (Air bag controller, Air bag control module)
S		
	SFI	Sequential Multiport Fuel Injection
	SOHC	Single Over Head Camshaft
	SOI	Start of Injection
	TBI	Throttle Body Fuel Injection (Single-Point Fuel Injection, SPI)
	TCC	Torque Converter Clutch
	TCM	Transmission Control Module (A/T Controller, A/T Control Module)
	TP Sensor	Throttle Position Sensor
T	TVV	Thermal Vacuum Valve (Thermal Vacuum Switching Valve, TVSV, Bimetal Vacuum Switching Valve, BVSV)
	TWC	Three Way Catalytic Converter (Three Way Catalyst)
	2WD	2 Wheel Drive
	VIN	Vehicle Identification Number
V	VSS	Vehicle Speed Sensor
	VVT	Variable Valve Timing
	WU-OC	Warm Up Oxidation Catalytic Converter
W		
	WU-TWC	Warm Up Three Way Catalytic Converter

Fastener Information

Metric Fasteners Information

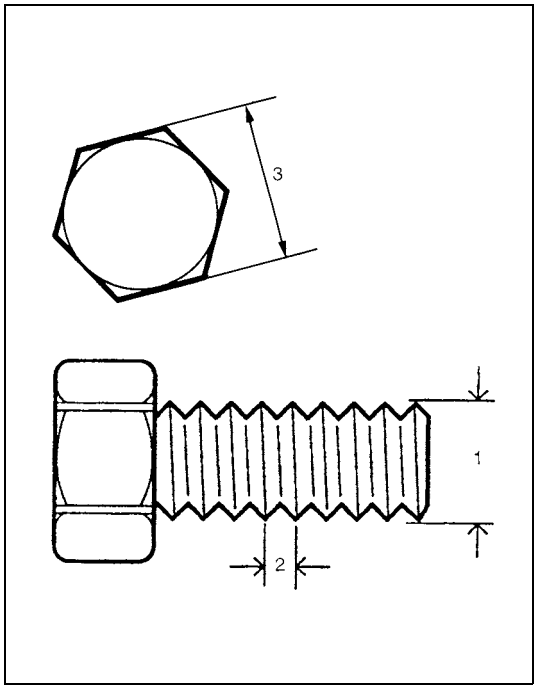

Most of the fasteners used for this vehicle are JIS-defined and ISO-defined metric fasteners. When replacing any fasteners, it is most important that replacement fasteners be the correct diameter, thread pitch and strength.

CAUTION:

Even when the nominal diameter (1) of thread is the same, the thread pitch (2) or the width across flats (3) may vary between ISO and JIS. Refer to JIS-TO-ISO Main Fasteners Comparison Table below for the difference.
Installing a mismatched bolt or nut will cause damage to the thread.
Before installing, check the thread pitch for correct matching and then tighten it by hand temporarily. If it is tight, recheck the thread pitch.

JIS-TO-ISO Main Fasteners Comparison Table

Standard \ Nominal diameter		M6	M8	M10	M12	M14
JIS	Thread pitch	1.0	1.25	1.25	1.25	1.5
	Width across flats	10	12	14	17	19
ISO	Thread pitch	1.0	1.25	1.5	1.5	1.5
	Width across flats	10	13	16	18	21

SECTION 0B

MAINTENANCE AND LUBRICATION

WARNING:

For vehicles equipped with a Supplemental Restraint (Air Bag) System:

- **Service on and around the air bag system components or wiring must be performed only by an authorized SUZUKI dealer. Refer to "System Components and Wiring Location View and Connectors" under "General Description" in Section 10B in order to confirm whether you are performing service on or near the air bag system components or wiring. Please observe all WARNINGS and "Service Precautions" under "On-Vehicle Service" in Section 10B before performing service on or around the air bag system components or wiring. Failure to follow WARNINGS could result in unintentional activation of the system or could render the system inoperative. Either of these two conditions may result in severe injury.**
- **Technical service work must be started at least 90 seconds after the ignition switch is turned to the "LOCK" position and the negative cable is disconnected from the battery. Otherwise, the system may be activated by reserve energy in the Sensing and Diagnostic Module (SDM).**

NOTE:

For the items with asterisk (*) in the "CONTENTS" below, refer to the same section of the Service Manual mentioned in "Foreword" of this manual.

CONTENTS

Maintenance Schedule 0B-3
Maintenance Schedule Under Normal Driving Conditions 0B-3
Maintenance Recommended Under Severe Driving Conditions.....0B-6
Maintenance Service 0B-7
M15 Engine:
Drive Belt Inspection ..... *
Water pump and generator drive belt inspection ..... *
A/C Compressor drive belt (if equipped) inspection ..... *
Drive Belt Replacement ..... *
Water pump and generator drive belt replacement..... *
A/C Compressor drive belt (if equipped) replacement..... *
Valve Lash (Clearance) Inspection ..... *
Engine Oil and Oil Filter Replacement ..... *
Engine Coolant Replacement ..... *
Exhaust System Inspection..... *
Spark Plugs Replacement..... *
Air Cleaner Filter Inspection..... *
Air Cleaner Filter Replacement ..... *
Fuel Lines and Connections Inspection ..... *
Fuel Tank Inspection..... *
PCV Valve Inspection ..... *
Fuel Evaporative Emission Control System Inspection..... *
Z13DT Engine:
Engine Accessary Drive Belt Inspection (Z13DT Engine) 0B-7
Water pump and generator drive belt inspection 0B-7
Engine Accessary Drive Belt Replacement (Z13DT Engine) 0B-7
Water pump and generator drive belt replacement 0B-7
Engine Oil and Oil Filter Replacement (Z13DT Engine) 0B-7
Engine Coolant Replacement (Z13DT Engine) 0B-9
Exhaust System Inspection (Z13DT Engine) 0B-10
Air Cleaner Filter Inspection (Z13DT Engine) 0B-10
Air Cleaner Filter Replacement (Z13DT Engine) 0B-10
Fuel Lines and Connections Inspection (Z13DT Engine) 0B-11
Fuel Filter Replacement (Z13DT Engine) 0B-11

Water Draining of Fuel Filter (Z13DT Engine)..... 0B-11
Fuel Tank Inspection (Z13DT Engine) 0B-11
M15/Z13DT Engine Models:
Brake Discs and Pads (Front) Inspection..... *
Brake Drums and Shoes (Rear) Inspection..... *
Brake Hoses and Pipes Inspection ..... *
Brake Fluid Replacement..... *
Brake Lever and Cable Inspection ..... *
Clutch Inspection 0B-11
Tires Inspection..... *
Wheel Discs Inspection..... *
Wheel Bearing Inspection ..... *
Suspension System Inspection..... *
Steering System Inspection ..... *
Drive Shaft (Axle) Boots Inspection ..... *
Propeller Shafts (4WD) Inspection..... *
Manual Transmission Oil Inspection (M15 Engine) 0B-12
Manual Transmission Oil Replacement 0B-12
Automatic Transmission Fluid Level Inspection 0B-12
Automatic Transmission Fluid Replacement..... 0B-13
Automatic Transmission Fluid Cooler Hose Inspection 0B-13
Transfer Oil (4WD) and Rear Differential Oil (4WD) Inspection..... *
Transfer Oil (4WD) and Rear Differential Oil (4WD) Replacement..... *
All Latches, Hinges and Locks Inspection ..... *
Doors ..... *
Engine hood..... *
Air Conditioning Filter (If Equipped) Inspection 0B-13
Air Conditioning Filter (If Equipped) Replacement..... 0B-13
Final Inspection ..... *
Recommended Fluids and Lubricants..... 0B-14

Maintenance Schedule

Maintenance Schedule Under Normal Driving Conditions

NOTE:

- **This interval should be judged by odometer reading or months, whichever comes first.**
- **This table includes service as scheduled up to 90,000 km (54,000 miles) mileage. Beyond 90,000 km (54,000 miles), carry out the same services at the same intervals respectively.**

M15 Engine Model:

Interval		Km (x 1,000)		15	30	45	60	75	90
		Miles (x 1,000)		9	18	27	36	45	54
		Months		12	24	36	48	60	72
ENGINE									
Drive belt (Engine accessary drive belt)				–	–	I	–	–	R
Valve lash (clearance)				–	I	–	I	–	I
Engine oil and oil filter				R	R	R	R	R	R
Engine coolant				–	–	R	–	–	R
Exhaust system				–	I	–	I	–	I
IGNITION SYSTEM									
✱Spark plugs	When unleaded fuel is used	Vehicle without HO2S	Iridium plug	–	–	–	R	–	–
		Vehicle with HO2S	Iridium plug	Replace every 105,000 km (63,000 miles) or 84 months					
	When leaded fuel is used, refer to “Maintenance Recommended Under Severe Driving Conditions” in this section.								
FUEL SYSTEM									
Air cleaner filter			Paved-road	I	I	R	I	I	R
			Dusty conditions	Refer to “Maintenance Recommended Under Severe Driving Conditions” in this section.					
Fuel lines and connections				–	I	–	I	–	I
Fuel tank				–	–	I	–	–	I
EMISSION CONTROL SYSTEM									
✱PCV valve		Vehicle without HO2S		–	–	I	–	–	I
		Vehicle with HO2S		–	–	–	–	–	I
✱Fuel evaporative emission control system				–	–	–	–	–	I

NOTE:

- **“R”: Replace or change**
- **“I”: Inspect and correct, replace or lubricate if necessary**
- **For Sweden, items with ✱ (asterisk) should be performed by odometer reading only.**
- **For spark plugs, replace every 50,000 km if the local law requires.**
- **Iridium spark plug: IFR6J11 (NGK)**

Z13DT Engine Model:

Interval		Km (x 1,000)	15	30	45	60	75	90
		Miles (x 1,000)	9	18	27	36	45	54
		Months	12	24	36	48	60	72
ENGINE								
Engine accessary drive belt			–	I	–	I	–	I
			Replace every 150,000 km (90,000 miles) or 120 months					
Engine oil and oil filter	With a synthetic engine oil of oil grade: ACEA B3, and oil viscosity: SAE 0W-30, 0W-40, 5W-30, 5W-40		Replace every 20,000 km (12,000 miles) or 16 months					
	With engine oils other than specified synthetic engine oils		Replace every 10,000 km (6,000 miles) or 8 months					
Engine coolant			–	–	R	–	–	R
Exhaust system			–	I	–	I	–	I
FUEL SYSTEM								
Air cleaner filter			Replace every 50,000 km (30,000 miles) or 40 months					
Fuel lines and connections			–	I	–	I	–	I
Fuel filter			–	R	–	R	–	R
			Drain water every 15,000 km (90,000 miles) or 12 months					
Fuel tank			–	–	I	–	–	I

NOTE:

- **"R": Replace or change**
- **"I": Inspect and correct, replace or lubricate if necessary**
- **Some maintenance items are required to be serviced at times other than the regular maintenance times shown at the top of above table. These items can be serviced at an earlier service opportunity according to customer's maintenance convenience. Their next maintenance service should be done within the specified period.**

M15 and Z13DT Engine Models:

Interval	Km (x 1,000)	15	30	45	60	75	90
	Miles (x 1,000)	9	18	27	36	45	54
	Months	12	24	36	48	60	72
BRAKE							
Brake discs and pads (thickness, wear, damage)		I	I	I	I	I	I
Brake drums and shoes (wear, damage)		–	I	–	I	–	I
Brake hoses and pipes (leakage, damage, clamp)		–	I	–	I	–	I
Brake fluid		–	R	–	R	–	R
Brake lever and cable (damage, stroke, operation)		Inspect at first 15,000 km (9,000 miles only)					
CHASSIS AND BODY							
Clutch (travel)		–	I	–	I	–	I
Tires (wear, damage, rotation)/wheels (damage)		I	I	I	I	I	I
Suspension system (tightness, damage, rattle, breakage)		–	I	–	I	–	I
Steering system (tightness, damage, breakage, rattle)		–	I	–	I	–	I
Drive shaft (axle) boots/Propeller shafts (4WD)		–	–	I	–	–	I
Manual transmission oil	M15 engine (I: 15,000 km only)	I	–	R	–	–	R
	Z13DT engine	–	R	–	R	–	R
Automatic transmission fluid	Fluid level	–	I	–	I	–	I
	Fluid change	Replace every 165,000 km (99,000 miles)					
	Fluid hose	–	–	–	I	–	–
Transfer oil (4WD) (leakage, level)		I	–	I	–	I	–
Rear differential oil (4WD) (leakage, level) (R: 1st 15,000 km only)		R or I	–	I	–	I	–
All latches, hinges and locks		–	I	–	I	–	I
Air conditioning filter (if equipped)		–	I	R	–	I	R

NOTE:

- **"R": Replace or change**
- **"I": Inspect and correct or replace if necessary**

Maintenance Recommended Under Severe Driving Conditions

If the vehicle is usually used under the conditions corresponding to any severe condition code given below, IT IS RECOMMENDED that applicable maintenance operation be performed at the particular interval as shown in the following table.

Severe condition code:
A: Repeated short trips
B: Driving on rough and/or muddy roads
C: Driving on dusty roads
D: Driving in extremely cold weather and/or salted roads
E: Repeated short trips in extremely cold weather
F: Leaded fuel use
G: – – – – –
H: Towing a trailer (if admitted)

Severe Condition Code	Maintenance		Maintenance Operation	Maintenance Interval
– B C D – – – –	Drive belt (Engine accessary drive belt)		I	Every 15,000 km (9,000 miles) or 12 months
			R	Every 45,000 km (27,000 miles) or 36 months
A – C D E F – H	Engine oil and oil filter	M15 engine	R	Every 5,000 km (3,000 miles) or 4 months
A – C D E – – H		Z13DT engine		Every 10,000 km (6,000 miles) or 8 months
– – C – – – – –	Air cleaner filter ✱1		I	Every 2,500 km (1,500 miles)
			R	Every 30,000 km (18,000 miles) or 24 months
A B C – E F – H	Spark plugs	Iridium spark plug	R	Every 30,000 km (18,000 miles) or 24 months
– B C D – – – H	Wheel bearings		I	Every 15,000 km (9,000 miles) or 12 months
– B – D E – – H	Drive shafts and propeller shafts (4WD)		I	Every 15,000 km (9,000 miles) or 12 months
– B – – E – – H	Manual transmission, transfer (4WD) and differential oil (4WD)		R	First time only: 15,000 km (9,000 miles) or 12 months
				Second time and after: Every 30,000 km (18,000 miles) or 24 months reckoning from 0 km (0 miles) or 0 month
– B – – E – – H	Automatic transmission fluid		R	Every 30,000 km (18,000 miles) or 24 months

NOTE:

- **"I": Inspect and correct or replace if necessary**
- **"R": Replace or change**
- **✱1: Inspect more frequently if the vehicle is used under dusty conditions.**

Maintenance Service

Engine Accessary Drive Belt Inspection (Z13DT Engine)

WARNING:
All inspection and replacement are to be performed with ENGINE NOT RUNNING.

Water pump and generator drive belt inspection

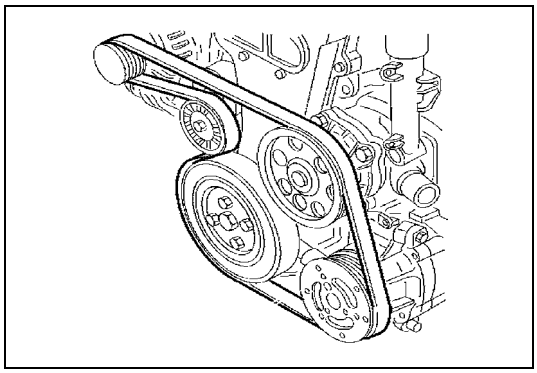

Inspect belt for cracks, cuts, deformation, wear, tension and cleanliness referring to “Water Pump and Generator Drive Belt Inspection” in Section 6B3. If any defect exists, replace.

Engine Accessary Drive Belt Replacement (Z13DT Engine)

Water pump and generator drive belt replacement

Replace belt with new one referring to “Water Pump/Generator Drive Belt Removal and Installation” in Section 6B3.

Engine Oil and Oil Filter Replacement (Z13DT Engine)

WARNING:
- **New and used engine oil can be hazardous. Be sure to read “WARNING” in General Precaution in Section 0A and observe what in written there.**
- **Step 1) – 7) outlined below must be performed with ENGINE NOT RUNNING. For step 8), be sure to have adequate ventilation while engine is running.**

Before draining engine oil, check engine for oil leakage. If any evidence of leakage is found, make sure to correct defective part before proceeding to the following work.

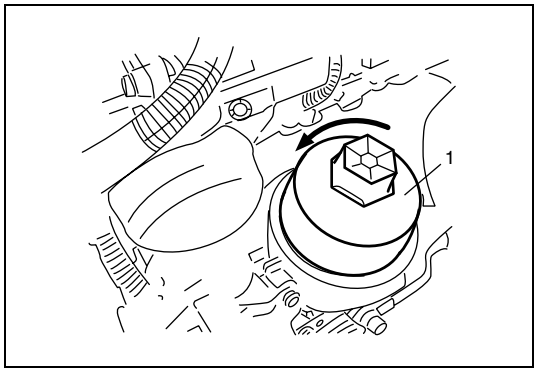

1) Remove oil filter element.
   a) Place oil collecting basin under filter.
   b) Loosen and remove oil filter housing cover (1).

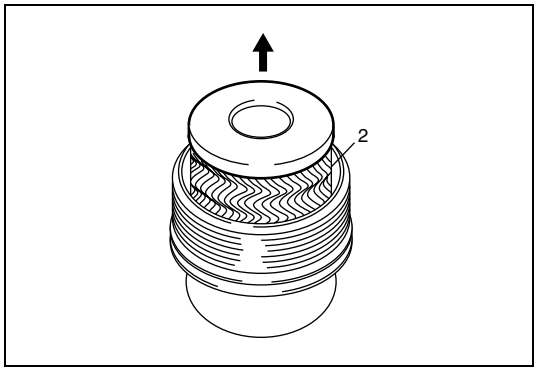

   c) Pull out oil filter element (2) from cover.

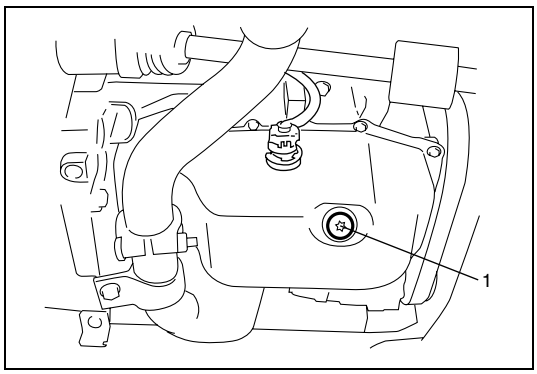

2) Drain engine oil by removing drain plug (1).
3) After draining oil, wipe drain plug clean and replace seal ring with a new one. Reinstall drain plug, and tighten it securely as specified below.

Tightening torque
Engine oil drain plug (a): 20 N·m (2.0 kg-m, 14.5 lb-ft)

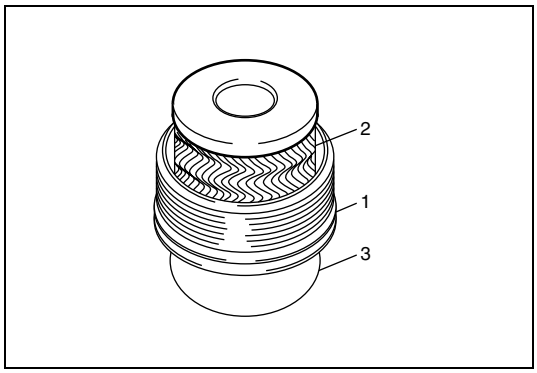

4) Install oil filter element.
   a) Replace seal ring (1) of oil filter housing cover (3) with new one and apply engine oil to seal ring.
   b) Install new oil filter element (2) to cover.

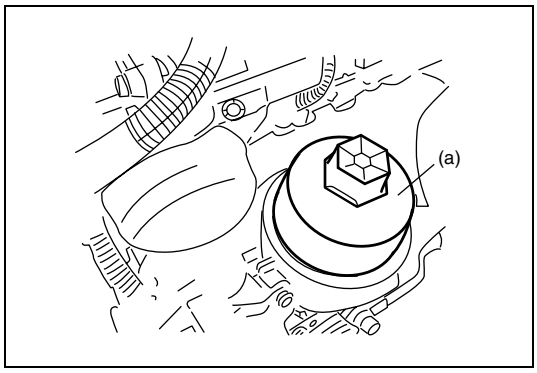

   c) Install oil filter housing cover with element.

Tightening torque
Oil filter housing cover (a): 25 N·m (2.5 kg-m) 18.5 lb-ft

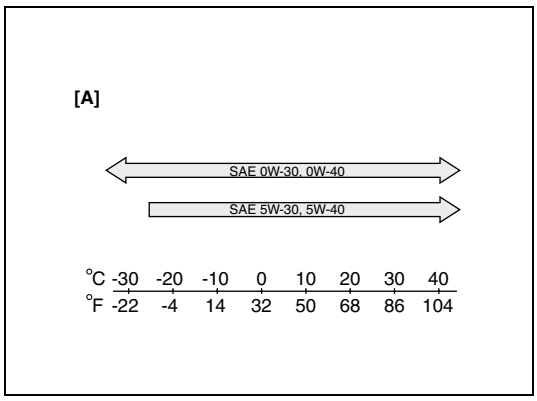

5) Replenish oil until oil level is brought to FULL level mark on dipstick. (about 3.2 liters (5.6 lmp pt.)) The filler inlet is by the engine oil filter.
   Use specified engine oil. Select the appropriate oil viscosity according to the proper engine oil viscosity chart [A].

NOTE:

Note that the amount of oil required when actually changing oil may somewhat differ from the data depending on various conditions (temperature, viscosity, etc.)

6) Check oil filter and drain plug for oil leakage.

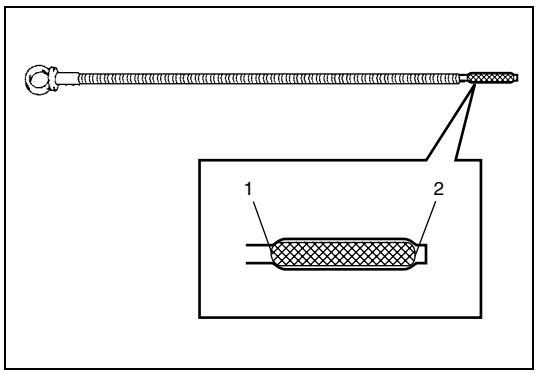

7) Start engine and run it for 3 minutes. Stop it and wait 5 minutes before checking oil level. Add oil, as necessary, to bring oil level to FULL level mark on dipstick.

1. Full level mark
2. Low level mark

Engine Coolant Replacement (Z13DT Engine)

WARNING:

To help avoid danger of being burned, do not remove radiator cap while engine and radiator are still hot. Scalding fluid and steam can be blown out under pressure if cap is taken off too soon.

CAUTION:

When changing engine coolant, use mixture of 50% specified water and 50% ANTIFREEZE/ANTICORROSION COOLANT for the purpose of corrosion protection and lubrication.

Change engine coolant with new one referring to “Cooling System Flush and Refill” in Section 6B3.

Exhaust System Inspection (Z13DT Engine)

WARNING:
To avoid danger of being burned, do not touch exhaust system when it is still hot. Any service on exhaust system should be performed when it is cool.

When carrying out periodic maintenance, or the vehicle is raised for other service, check exhaust system as follows:

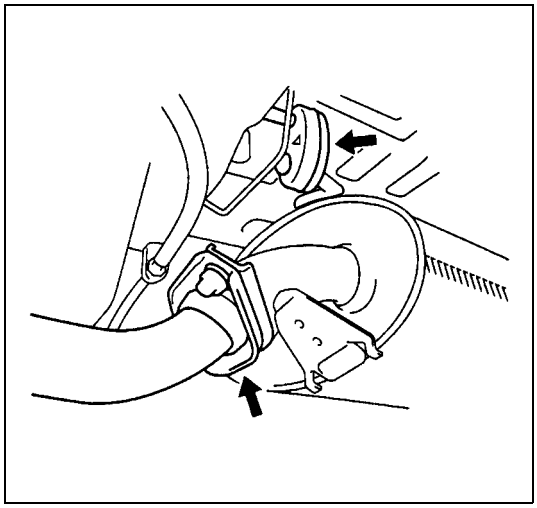

- Check rubber mountings for damage, deterioration, and out of position.
- Check exhaust system for leakage, loose connections, dents and damages.
  If bolts or nuts are loose, tighten them to specification.
- Check nearby body areas for damaged, missing, or mispositioned parts, open seams, holes, loose connections or other defects which could permit exhaust fumes to seep into the vehicle.
- Make sure that exhaust system components have enough clearance from the underbody to avoid overheating and possible damage to the floor carpet.
- Any defects should be fixed at once.

Air Cleaner Filter Inspection (Z13DT Engine)

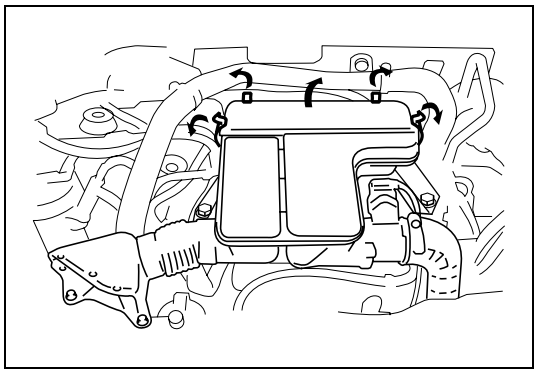

1) Remove air cleaner case clamps.
2) Take air cleaner filter out of case.

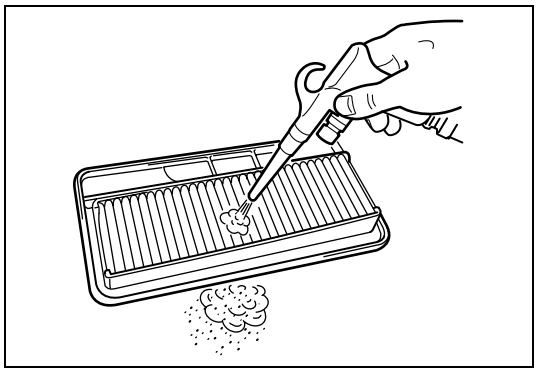

3) Check that filter is not excessively dirty, damaged or oily, clean filter with compressed air from air outlet side of filter.
4) Install air cleaner filter and clamp upper case securely.

Air Cleaner Filter Replacement (Z13DT Engine)

Replace air cleaner filter with new one according to steps 1), 2) and 4) of inspection procedure.

Fuel Lines and Connections Inspection (Z13DT Engine)

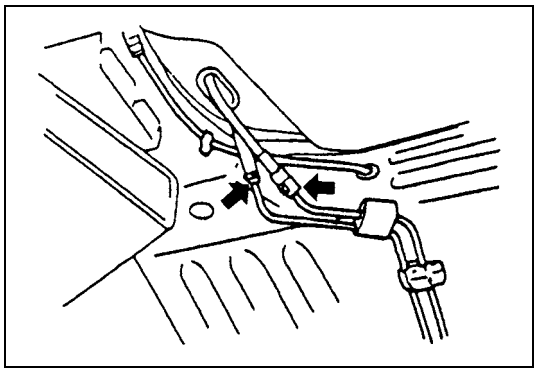

Visually inspect fuel lines and connections for evidence of fuel leakage, hose cracking and damage. Make sure all clamps are secure.
Repair leaky joints, if any.
Replace hoses that are suspected of being cracked.

Fuel Filter Replacement (Z13DT Engine)

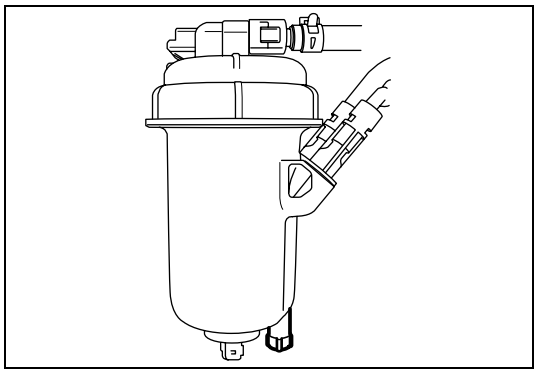

WARNING:
This work must be performed in a well ventilated area and away from any open flames (such as gas hot water heaters).

Replace fuel filter element in fuel filter assembly (1) with new one referring to “Fuel Filter” in Section 6C3.

Water Draining of Fuel Filter (Z13DT Engine)

Bleed fuel filter of water referring to “Water Draining of Fuel Filter” in Section 6C3.

Fuel Tank Inspection (Z13DT Engine)

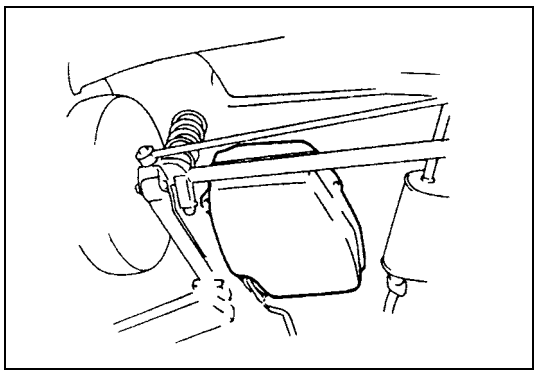

Check fuel tank damage, cracks, fuel leakage, corrosion and tank bolts looseness.
If a problem is found, repair or replace.

Clutch Inspection

For M15 engine model:
Check clutch pedal for height and free travel referring to “Clutch Pedal Height” and “Clutch Pedal Free Travel” in Section 7C. Adjust or correct if necessary.
For Z13DT engine model:
Check clearance between cable nut and release shaft referring to “Clutch Cable Adjustment” in Section 7C3.
Adjust or correct if necessary.

Manual Transmission Oil Inspection (M15 Engine)

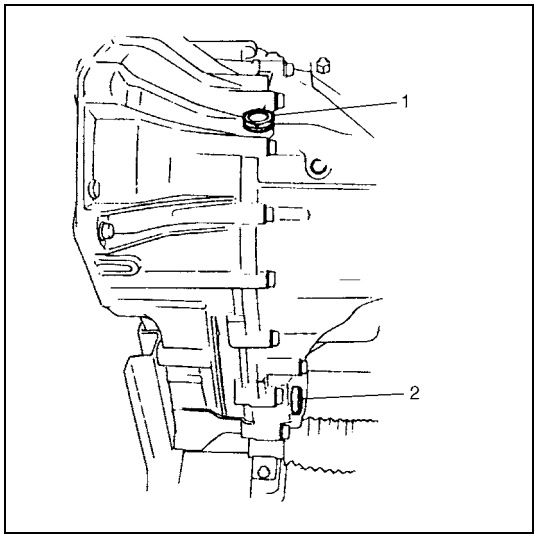

1) Inspect transmission case for evidence of oil leakage. Repair leaky point if any.
2) Make sure that vehicle is placed level for oil level check.
3) Remove oil filler/level plug (1) of transmission.
4) Check oil level.
   Oil level can be checked roughly by means of filler/level plug hole. That is, if oil flows out of level plug hole or if oil level is found up to hole when level plug is removed, oil is properly filled.
   If oil is found insufficient, pour specified oil up to level hole.
   For specified oil, refer to “Manual Transaxle Oil Change” in Section 7A2.
5) Apply sealant to filler/level plug and tighten it to specified torque.

Manual Transmission Oil Replacement

Replace manual transmission oil referring to “Manual Transaxle Oil Change” in Section 7A2 (for M15 engine) or 7A3 (for Z13DT engine).

Automatic Transmission Fluid Level Inspection

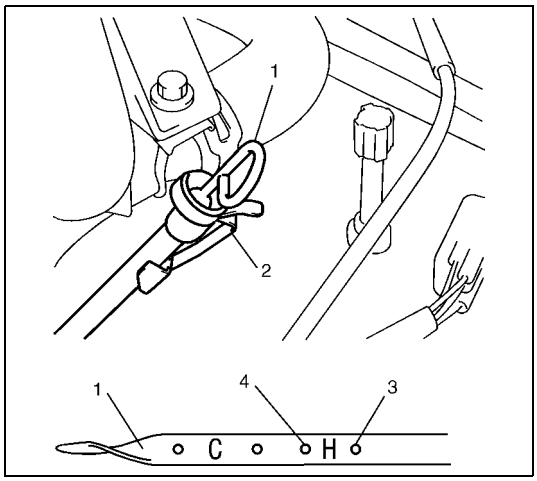

1) Inspect transmission case for evidence of fluid leakage. Repair leaky point, if any.
2) Make sure that vehicle is placed level for fluid level check.
3) Pull out dipstick and check fluid level.
   For fluid level checking procedure, refer to “Fluid level check at normal operating (hot) temperature (Hot check)” in Section 7B and be sure to perform it under specified conditions.
   If fluid level is low, replenish specified fluid.

1. Dipstick
2. Clamp
3. FULL HOT mark
4. LOW HOT mark

Automatic Transmission Fluid Replacement

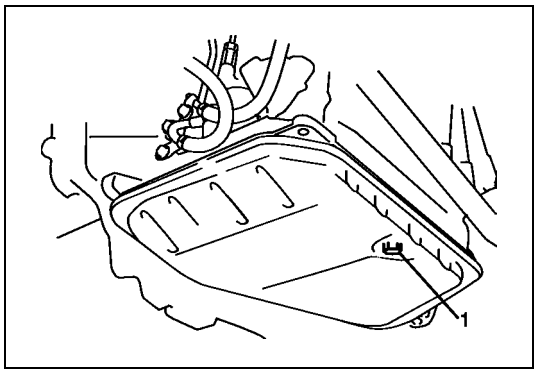

1) Inspect transmission case for evidence of fluid leakage. Repair leaky point, if any.
2) Make sure that vehicle is placed level for fluid level check.
3) Change fluid. For its procedure, refer to “Fluid change” in Section 7B.

1. Drain plug

Automatic Transmission Fluid Cooler Hose Inspection

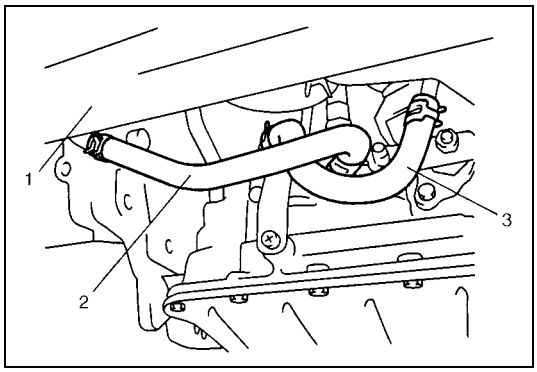

Check automatic transaxle fluid cooler hose for fluid leakage, cracks, damage and deterioration.
Replace hose and/or clamp if any faulty condition is found.

Air Conditioning Filter (If Equipped) Inspection

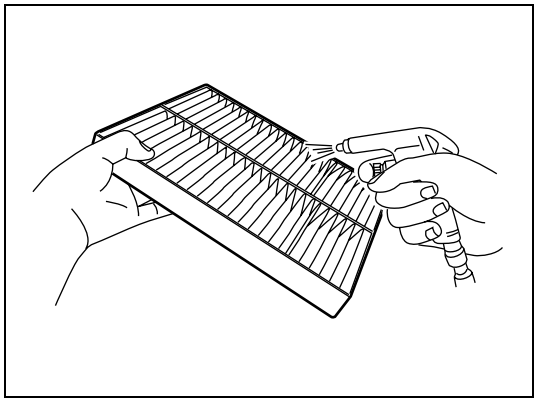

1) Remove the air conditioning filter from the cooling unit referring to “Air Conditioning Filter (If Equipped) Replacement” in this section.
2) Check for dirt and dust. If the air conditioning filter is excessively dirty, replace the air conditioning filter with the new one. If not, go to the next step.
3) Blow compressed air on the air outlet side of the air conditioning filter for removing dust.
4) Install the air conditioning filter into the cooling unit by reversing the removal procedure.

Air Conditioning Filter (If Equipped) Replacement

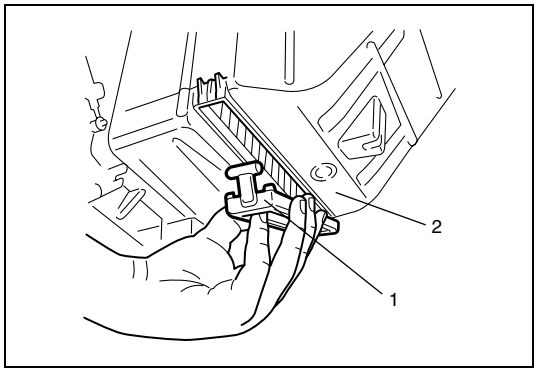

1) Remove the air conditioning filter door (1) from the cooling unit (2).
2) Remove the air conditioning filter from the cooling unit.
3) Install the new air conditioning filter into the cooling unit.
4) Install the air conditioning filter door onto the cooling unit.

Recommended Fluids and Lubricants

Engine oil (M15 engine)	SG, SH, SJ or SL grade (Refer to “Engine Oil and Oil Filter Replacement (Z13DT Engine)” for M15 engine in this section for engine oil viscosity.)
Engine oil (Z13DT engine)	Refer to “Engine Oil and Oil Filter Replacement (Z13DT Engine)” in this section for engine oil grade and viscosity.
Engine coolant (Ethylene glycol base coolant)	“Antifreeze/Anticorrosion coolant”
Brake fluid	DOT 4 or SAE J1704
Manual transmission oil	Refer to “Manual Transaxle Oil Change” in Section 7A2 or 7A3.
Transfer oil (4WD)	Refer to “Transfer Oil Change” in Section 7D.
Differential oil (4WD)	Refer to “Rear Differential Oil Change” in Section 7F.
Automatic transmission fluid	An equivalent of DEXRON® – III
Door hinges	Engine oil or water resistance chassis grease
Hood latch assembly	Engine oil or water resistance chassis grease
Key lock cylinder	Spray lubricant

SECTION 1A

HEATER AND VENTILATION

WARNING:

For vehicles equipped with Supplement Restraint (Air Bag) System:

- **Service on and around the air bag system components or wiring must be performed only by an authorized SUZUKI dealer. Refer to "Air Bag System Components and Wiring Location View" under "General Description" in air bag system section in order to confirm whether you are performing service on or near the air bag system components or wiring. Please observe all WARNINGs and "Service Precautions" under "On-Vehicle Service" in air bag system section before performing service on or around the air bag system components or wiring. Failure to follow WARNINGs could result in unintentional activation of the system or could render the system inoperative. Either or these two conditions may result in severe injury.**
- **Technical service work must be started at least 90 seconds after the ignition switch is turned to the "LOCK" position and the negative cable is disconnected from the battery. Otherwise, the system may be activated by reserve energy in the Sensing and Diagnostic Module (SDM).**

NOTE:

For the items with asterisk (*) in the "CONTENTS" below, refer to the same section of the Service Manual mentioned in the "Foreword" of this manual.

CONTENTS

General Description 1A-2
Heater and Ventilation Construction 1A-2
Heater and Ventilation Wiring Circuit Diagram 1A-3
On-Board Diagnostic System Description (Z13DT Engine Model) 1A-4
Diagnosis 1A-5
Heater and Ventilation System Symptom Diagnosis 1A-5
Diagnostic Trouble Code (DTC) Check (Z13DT Engine Model) 1A-6
Diagnostic Trouble Code (DTC) Table (Z13DT Engine Model) 1A-7
On-Vehicle Service 1A-9
Heater Unit Components 1A-9
Heater Unit Removal and Installation 1A-10
Blower Motor Removal and Installation ..... *
Blower Motor Inspection ..... *
Blower Motor Resistor Removal and Installation ..... *
Blower Motor Resistor Inspection ..... *
Supplementary Heater Removal and Installation (if equipped) (Z13DT Engine) 1A-11
Supplementary Heater Inspection (if equipped) (Z13DT Engine) 1A-11
Supplementary Heater Controller Removal and Installation (if equipped) (Z13DT Engine) 1A-11
Supplementary Heater Relay Inspection (if equipped) (Z13DT Engine) 1A-11
Heater Control Lever Assembly Components ..... *
Heater Control Lever Assembly Removal and Installation ..... *
Blower Speed Selector Inspection ..... *
Rear Defogger Switch Inspection ..... *
Air Inlet Box Components 1A-12
Air Inlet Box Removal and Installation ..... *
Center Ventilation Louver Removal and Installation ..... *
Side Ventilation Louver Removal and Installation ..... *

General Description

Heater and Ventilation Construction

NOTE:

For M15 engine model, refer to the same section of the Service Manual mentioned in the "Foreword" of this service manual.

For Z13DT Engine Model

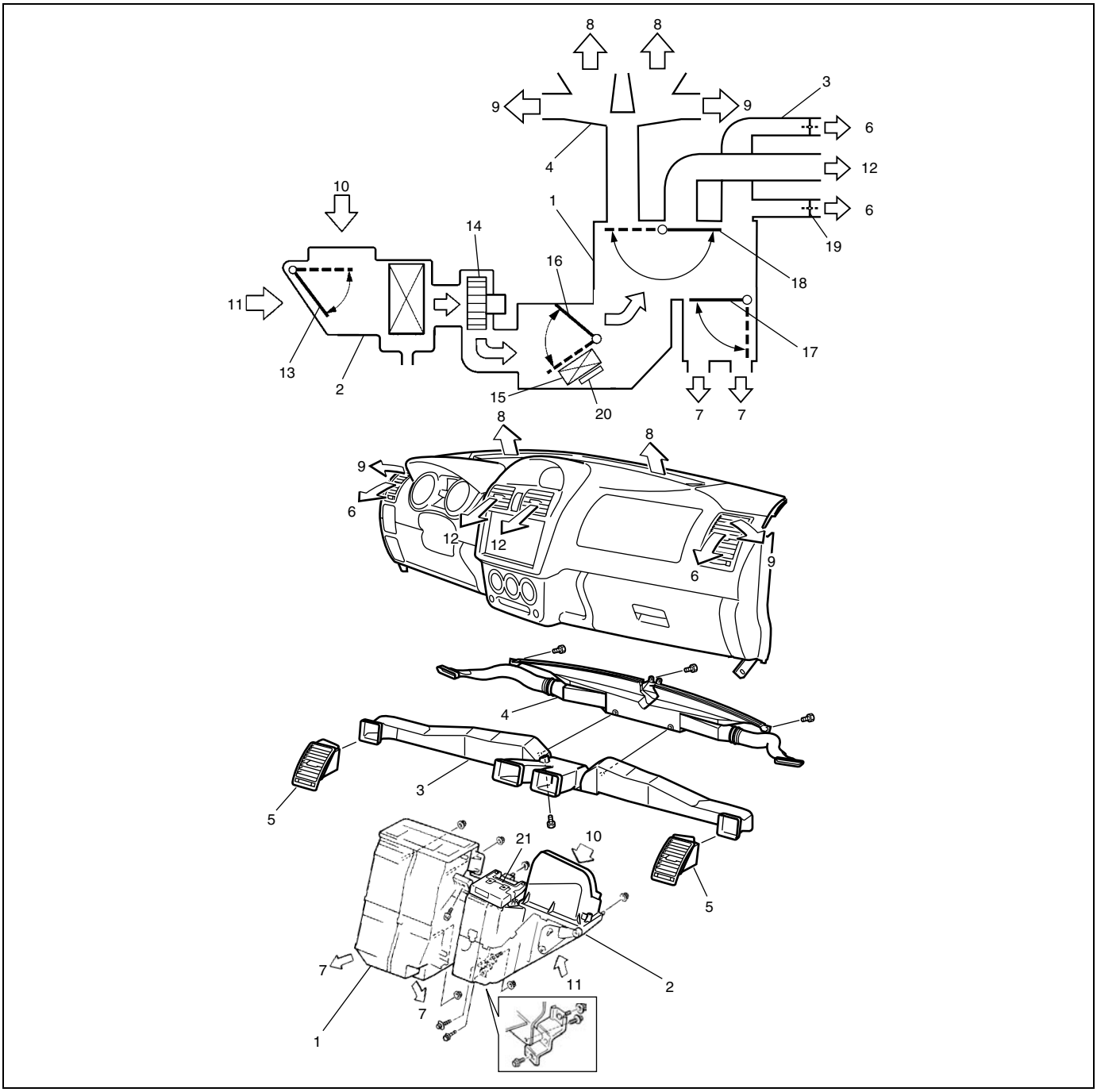

1. Heater unit	7. Foot air	13. Air inlet select door	19. Side ventilation control door
2. Air inlet box	8. Front defroster air	14. Blower motor	20. Supplementary heater (if equipped)
3. Ventilator duct	9. Side defroster air	15. Heater core	21. Supplementary heater controller (if equipped)
4. Defroster nozzle	10. Fresh air	16. Temperature control door	
5. Ventilator outlet	11. Recirculation air	17. Foot air control door	
6. Side ventilation air	12. Center ventilation air	18. Ventilation defroster air control door	

Heater and Ventilation Wiring Circuit Diagram

NOTE:

For M15 engine model, refer to the same section of the Service Manual mentioned in the "Foreword" of this service manual.

For Z13DT Engine Model

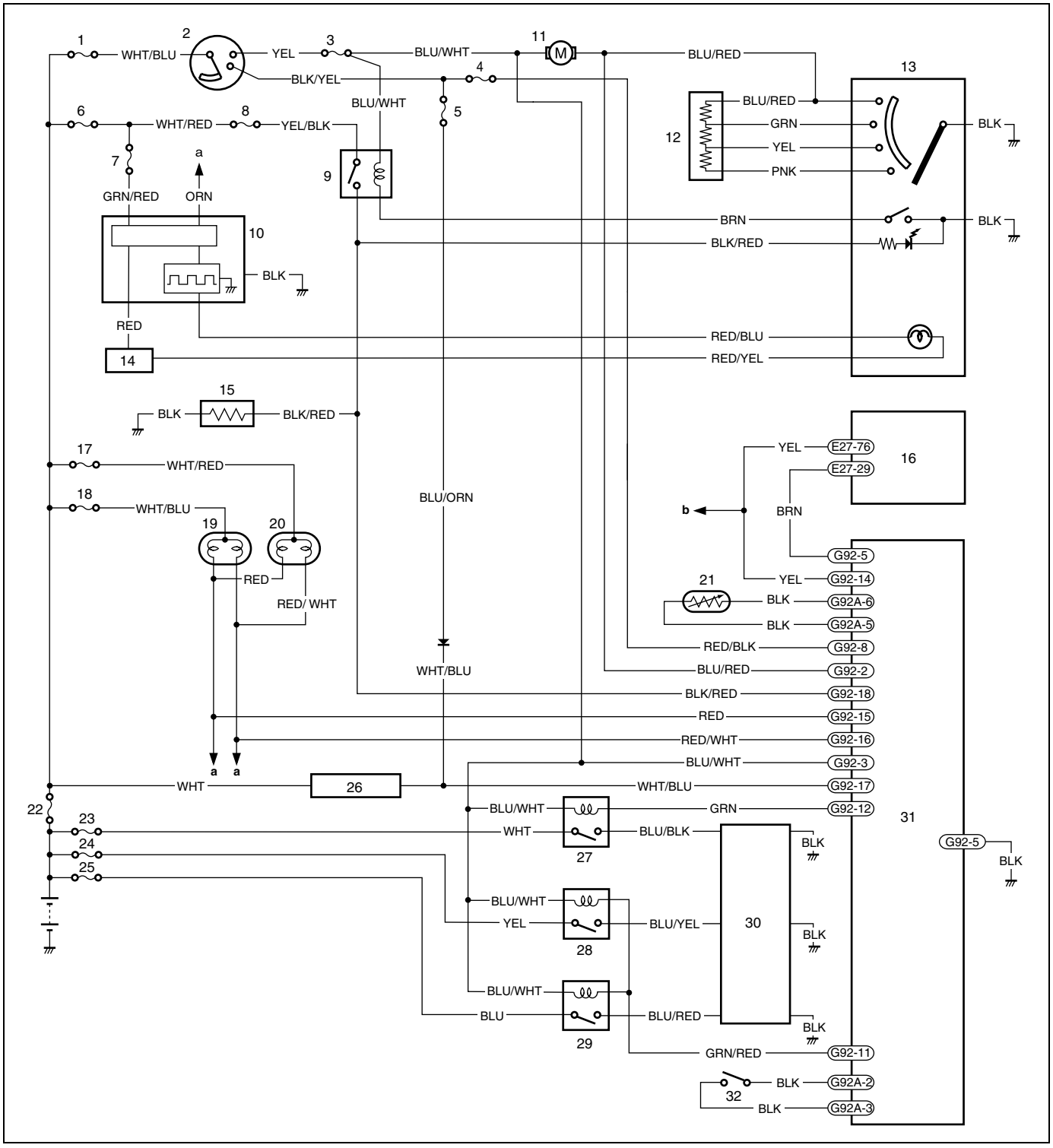

1. “IGNITION SWITCH” fuse	10. Lighting controller	19. Left headlight	28. Supplementary heater rarely 2
2. Ignition switch	11. Blower motor	20. Right headlight	29. Supplementary heater rarely 3
3. “HEATER” fuse	12. Blower motor resister	21. Water temperature sensor	30. Supplementary heater
4. “TURN. BACK” fuse	13. Heater control panel	22. Main fuse	31. Supplementary heater controller
5. “METER” fuse	14. Junction connector	23. Supplementary heater fuse 1	a. To lighting switch
6. “CIRCUIT FUSE BOX” fuse	15. Rear defogger	24. Supplementary heater fuse 2	b. To fuel heating relay
7. “REAR FOG” fuse	16. ECM	25. Supplementary heater fuse 3	
8. “REAR DEFG” fuse	17. “HEAD LIGHT (R)” fuse	26. Generator	
9. Rear defogger relay	18. “HEAD LIGHT (L)” fuse	27. Supplementary heater rarely 1	

On-Board Diagnostic System Description (Z13DT Engine Model)

NOTE:

- **The on-board diagnostic system is available only for Z13DT engine model with the supplementary heater system.**
- **The SUZUKI scan tool cannot be used.**

For Z13DT Engine Model with the supplementary heater system, the on-board diagnostic system is available. The supplementary heater controller detects malfunctions related to the supplementary heater system. When the controller detects some malfunction, the diagnostic information as diagnostic trouble code (DTC) is stored in the memory of the controller. By performing the DTC check procedure, the diagnostic information can be known. For the procedure, refer to “Diagnostic Trouble Code (DTC) Check (Z13DT Engine Model)” and “Diagnostic Trouble Code (DTC) Table (Z13DT Engine Model)” in this section.

Diagnosis

Heater and Ventilation System Symptom Diagnosis

NOTE:

For M15 engine model, refer to the same section of the Service Manual mentioned in the "Foreword" of this service manual.

For Z13DT Engine Model

Condition	Possible Cause	Correction
Blower motor dose not work even when its switch is at operating position.	Fuse blown	Check "HEATER" fuse and main heater fuse, and then check for short circuit to ground.
	Blower motor resistor faulty	Check blower motor resistor.
	Blower speed selector faulty	Check blower speed selector.
	Blower motor faulty	Replace blower motor.
	Wiring or grounding faulty	Repair as necessary.
Blower speed selector dose not work when its switch is at maximum airflow position.	Blower speed selector faulty	Check blower speed selector.
	Wiring or grounding faulty	Check wiring and grounding, and then repair as necessary.
Incorrect temperature output.	Control cables broken or binding	Check control cables.
	Temperature control lever faulty	Check temperature control lever.
	Position of control cable clamp is faulty	Check position and adjust it as necessary.
	Temperature control door assembly broken	Repair temperature control door assembly.
	Air ducts clogged	Repair air ducts.
	Heater core leaking or clogged	Replace heater core.
	Heater hoses leaking or clogged	Replace heater hoses.
	Thermostat faulty	Replace thermostat case assembly referring to Section 6B3.
	Fuse blown	Check supplementary heater fuses.
	Supplementary heater faulty	Check supplementary heater (if equipped).
	Supplementary heater controller faulty	Check supplementary heater controller (if equipped).
	Supplementary heater relay faulty	Check supplementary heater relay (if equipped).
	Water temperature sensor faulty	Check water temperature sensor (if equipped).
	Full hot switch faulty	Check full hot switch (if equipped).
When mode control lever is changed, air outlet port dose not change or lever position disagree with air outlet port.	Control cable broken or binding	Check control cable.
	Airflow control lever faulty	Check airflow control lever.
	Position of control cable clamp is faulty	Check position and adjust it as necessary.
	Control doors broken	Repair control doors.
	Air ducts leaking or clogged	Repair air ducts.

Diagnostic Trouble Code (DTC) Check (Z13DT Engine Model)

NOTE:

- This checking procedure is available only for Z13DT engine model with the supplementary heater system.
- If more than two DTCs are detected, only DTC, which has the highest priority, is indicated. After the DTC is trouble-shot, DTC, which has the next priority, is indicated.
- The following procedure has to be performed two times. For the first time, the headlight has to be set at LOW position in the Step 7 below. For the second time, the headlight has to be set at HIGH position in the same step. Otherwise, it cannot be judged whether the DTC No.111 and 112 are detected or not.
- Be sure that the rear defogger switch is set at the ON position in the Step 4. Otherwise, the DTC No.101 is indicated even if the system is normal.

1) Remove the glove box from the instrument panel.
2) Set the blower speed selector at the OFF position.
3) Set the temperature selector at the MAX hot position.
4) Set the rear defogger switch at the ON position.
5) Turn the headlight ON.
6) Set the headlight at the LOW position (or HIGH position).
7) Start the engine.
8) Refer to “Diagnostic Trouble Code (DTC) Table (Z13DT Engine Model)” in this section, and see what DTC is detected by reading the flashing pattern of the LED (1) in the supplementary heater controller (2).

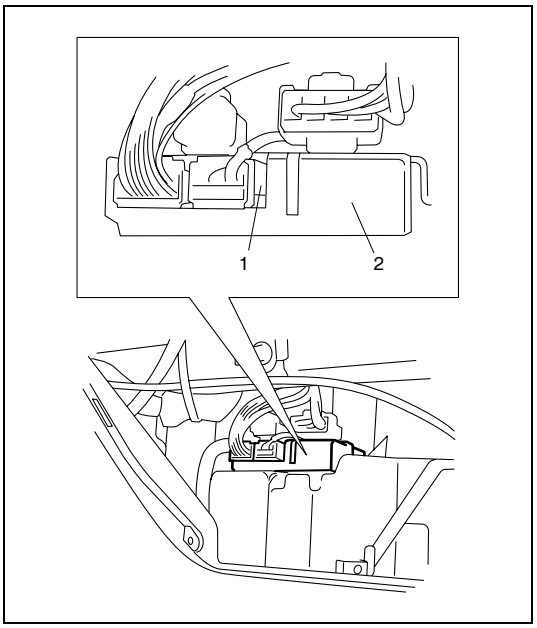

Diagnostic Trouble Code (DTC) Table (Z13DT Engine Model)

NOTE:

- **This table is available only for Z13DT engine model with the supplementary heater system.**
- **Refer to "A/C System Wiring Circuit Diagram" in this section for details of system components, wire colors, and terminal numbers of supplementary heater controller.**
- **In case that DTC 2-1, 2-2, 3-1, 3-2, 4-3, 7-1, and/or 8-1 are detected, the supplementary heater is not activated by the supplementary heater controller.**

DTC	LED flashing pattern		Priority	Possible cause
	First figure	Second figure		
–	Lighted ON		1	Normal
–	Lighted OFF		2	• "RED/BLK" wire at "G92-8" terminal open • "BLK" wire at "G92-10" terminal open • "TURN. BACK" fuse faulty
1-2	1	2	3	• "WHT/BLU" wire at "G92-17" terminal open • Alternator not generated
2-1	2	1	4	• "BRN" wire at "G92-5" terminal open
2-2	2	2	5	• "BRN" wire at "G92-5" terminal short
3-1	3	1	6	• "BLK" wire at "G92A-5" terminal open • "BLK" wire at "G92A-6" terminal open
3-2	3	2	7	• "BLK" wire at "G92A-5" terminal short • "BLK" wire at "G92A-6" terminal short
4-3	4	3	8	• "BLU/WHT" wire at "G92-3" terminal open • "BLU/WHT" wire at "G92-3" terminal short • "HEATER" fuse faulty
5-3	5	3	9	• "BLU/RED" wire at "G92-2" terminal open • "BLU/RED" wire at "G92-2" terminal short
6-1	6	1	10	• "BLK" wire at "G92A-2" terminal open • "BLK" wire at "G92A-3" terminal open
7-1	7	1	11	• "GRN" wire at "G92-12" terminal open • "GRN" wire at "G92-12" terminal short • Supplementary heater relay 1 faulty • "HEATER" fuse faulty
8-1	8	1	12	• "GRN/RED" wire at "G92-11" terminal open • "GRN/RED" wire at "G92-11" terminal short • Supplementary heater relay 2 and 3 faulty • "HEATER" fuse faulty
10-1	10	1	13	• "BLK/RED" wire at "G92-18" terminal open • "BLK/RED" wire at "G92-18" terminal short • Rear defogger relay faulty • "REAR DEFG" fuse faulty
11-1	11	1	14	• "RED/WHT" wire at "G92-16" terminal open • "RED/WHT" wire at "G92-16" terminal short • Headlight bulbs faulty • "HEAD LIGHT" fuses faulty
11-2	11	2	15	• "RED" wire at "G92-15" terminal open • "RED" wire at "G92-15" terminal short • Headlight bulbs faulty • "HEAD LIGHT" fuses faulty

Example (DTC No.2-2) of LED Flashing Pattern

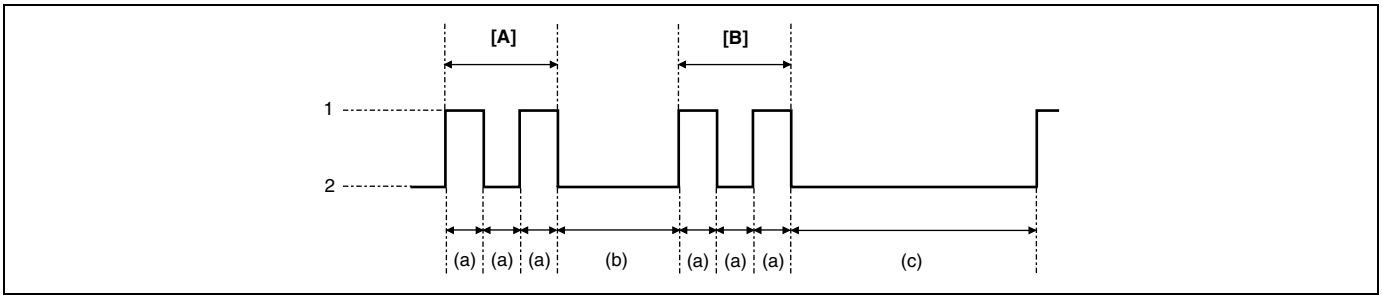

[A]: First figure	1. LED ON	(a). 0.3 seconds	(c). 2.0 seconds
[B]: Second figure	2. LED OFF	(b). 1.0 seconds	

On-Vehicle Service

Heater Unit Components

NOTE:

For M15 engine model, refer to the same section of the Service Manual mentioned in the "Foreword" of this service manual.

For Z13DT Engine Model

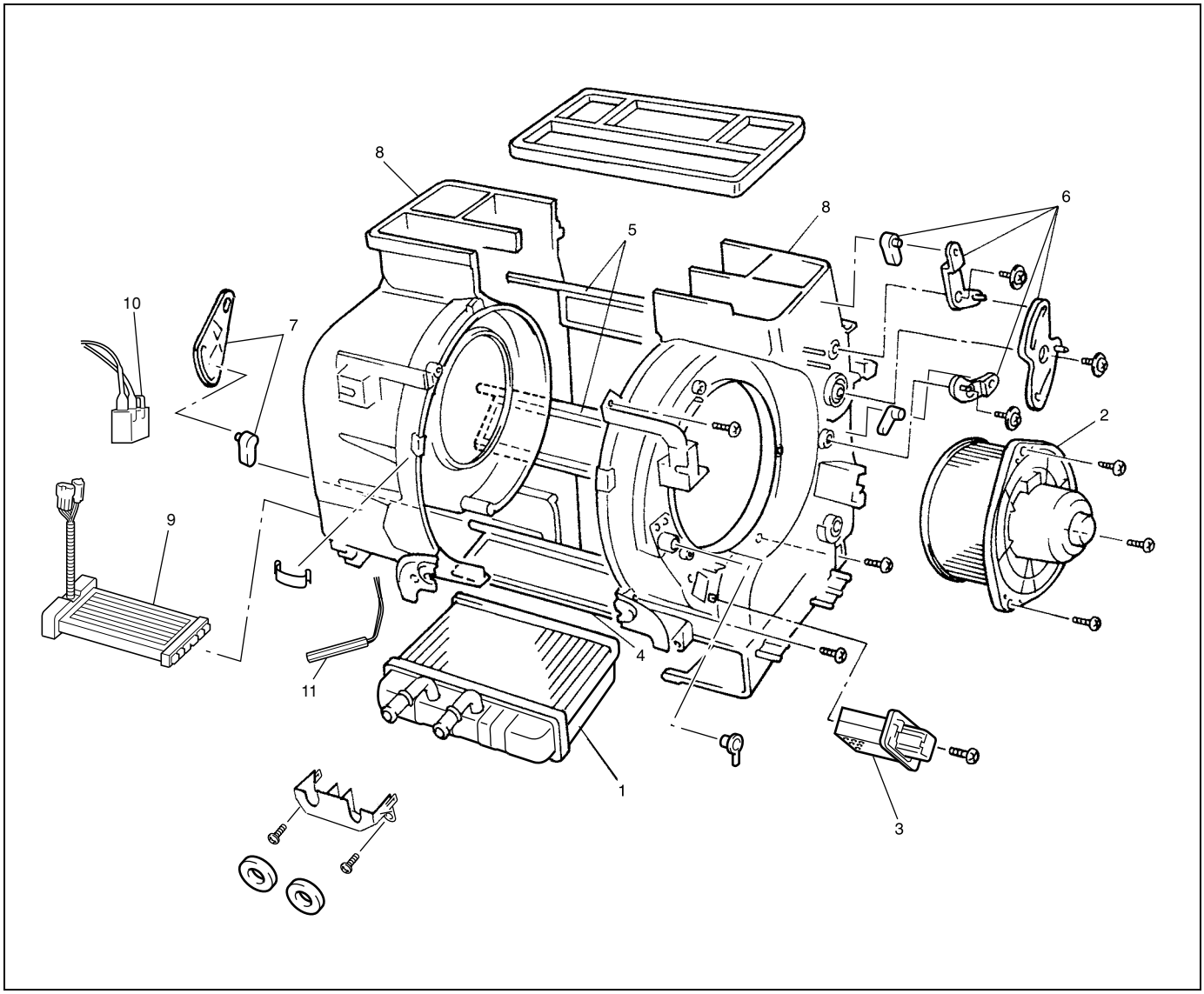

1. Heater core	4. Temperature control door assembly	7. Temperature control lever	10. Full hot switch (if equipped)
2. Blower motor assembly	5. Air flow control door assembly	8. Heater case	11. Water temperature sensor (if equipped)
3. Blower motor resistor	6. Air flow control lever	9. Supplementary heater (if equipped)	

Heater Unit Removal and Installation

Removal

For Z13DT Engine Model

1) Disconnect negative (–) cable at battery.
2) If equipped with air bag system, disable air bag system referring to “Disabling Air Bag System” in Section 10B.

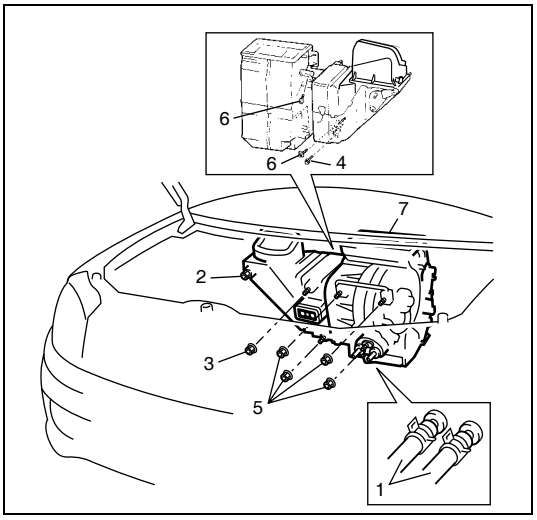

3) Drain engine coolant, and then disconnect heater hoses (1) from heater unit.
4) Remove instrument panel referring to “Instrument Panel Removal and Installation” in Section 9.
5) Remove 20-pin connector from supplementary heater controller and two connectors located on supplementary heater controller.
6) Loosen air inlet box (cooling unit) mounting nut (2) and mounting nut (3).
7) Remove bolts (4), nuts (5) and screws (6).
8) Remove heater unit (7).

For M15 Engine model

NOTE:

For M15 engine model, refer to the same section of the Service Manual mentioned in the “Foreword” of this service manual.

Installation

For Z13DT Engine Model

Reverse removal procedure to install heater unit noting the following instructions.

- When installing each part, be careful not to catch any cable or wiring harness.
- Adjust control cables by referring to “Heater Control Lever Assembly Removal and Installation” in this section.
- Fill engine coolant to radiator.
- If equipped with air bag system, enable air bag system referring to “Enabling Air Bag System” in Section 10B.

For M15 Engine model

NOTE:

For M15 engine model, refer to the same section of the Service Manual mentioned in the “Foreword” of this service manual.

Supplementary Heater Removal and Installation (if equipped) (Z13DT Engine)

Removal

1) Remove heater unit referring to “Heater Unit Removal and Installation” in this section.
2) Remove supplementary heater cover and supplementary heater referring to “Heater Unit Components” in this section.

Installation

1) Install supplementary heater and supplementary heater cover referring to “Heater Unit Components” in this section.
2) Install heater unit referring to “Heater Unit Removal and Installation” in this section.

Supplementary Heater Inspection (if equipped) (Z13DT Engine)

- Check if there is continuity between supplementary heater terminals. If there is no continuity, replace supplementary heater.
- Check supplementary heater for crack or any other damage. Replace if needed.

Supplementary Heater Controller Removal and Installation (if equipped) (Z13DT Engine)

Removal

1) Remove air inlet box referring to “Air Inlet Box Removal and Installation” in this section.
2) Remove supplementary heater controller referring to “Air Inlet Box Components” in this section.

Installation

Reverse removal procedure for installation.

Supplementary Heater Relay Inspection (if equipped) (Z13DT Engine)

1) Disconnect negative (–) cable at battery.
2) Remove supplementary heater relay (No.1, No.2 and No.3) from supplementary fuse box (No.1).

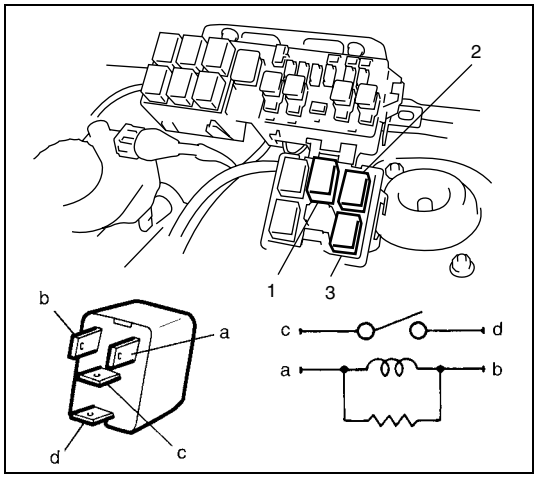

1.	Supplementary heater relay No.1
2.	Supplementary heater relay No.2
3.	Supplementary heater relay No.3

3) Check if there is no continuity between terminal “c” and “d”. If there is continuity, replace relay.
4) Check if there is continuity between terminal “c” and “d” when a 12 V battery is connected to terminals “a” and “b”. If there is no continuity, replace relay.

Air Inlet Box Components

NOTE:

For M15 engine model, refer to the same section of the Service Manual mentioned in the "Foreword" of this service manual.

For Z13DT Engine Model

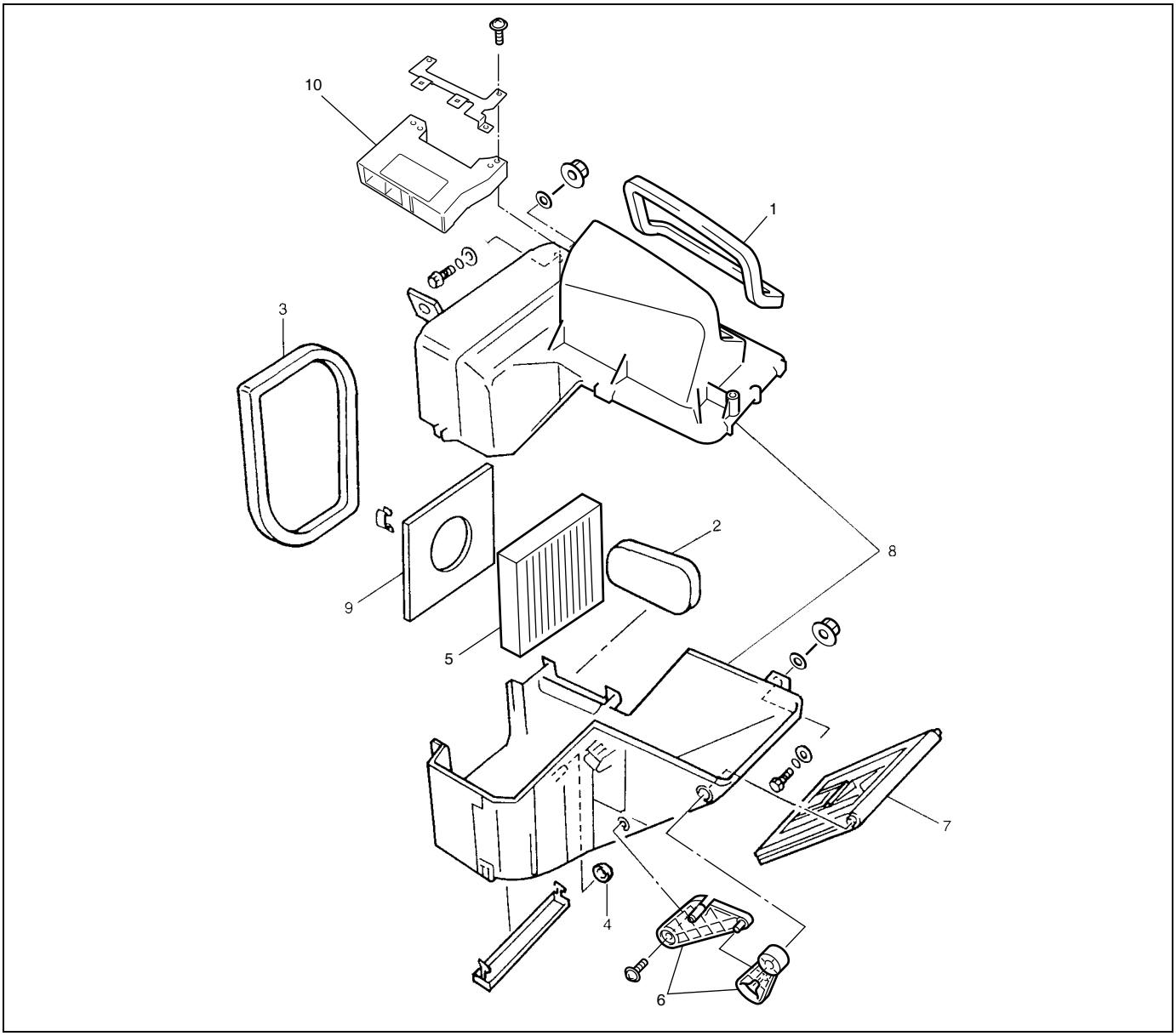

1. Air inlet box	4. Grommet	7. Air inlet door	10. Supplementary heater controller (if equipped)
2. Dash packing	5. Air filter (if equipped)	8. Air inlet box	
3. Packing	6. Door link	9. Air resistance board	

SECTION 1B

AIR CONDITIONING (OPTIONAL)

WARNING:

For vehicles equipped with Supplemental Restraint (Air Bag) System:

- **Service on and around the air bag system components or wiring must be performed only by an authorized SUZUKI dealer. Refer to "Air Bag System Components and Wiring Location View" under "General Description" in air bag system section in order to confirm whether you are performing service on or near the air bag system components or wiring. Please observe all WARNINGs and "Service Precautions" under "On-Vehicle Service" in air bag system section before performing service on or around the air bag system components or wiring. Failure to follow WARNINGs could result in unintentional activation of the system or could render the system inoperative. Either of these two conditions may result in severe injury.**
- **Technical service work must be started at least 90 seconds after the ignition switch is turned to the "LOCK" position and the negative cable is disconnected from the battery. Otherwise, the system may be activated by reserve energy in the Sensing and Diagnostic Module (SDM).**

CAUTION:

The air conditioning system of this vehicle uses refrigerant HFC-134a (R-134a).
None of refrigerant, compressor oil and component parts is interchangeable between two types of A/C: one using refrigerant CFC-12 (R-12) and the other using refrigerant HFC-134a (R-134a).
Be sure to check which refrigerant is used before any service work including inspection and maintenance. For identification between these two types, refer to "Refrigerant Type Construction" in this section.
When replenishing or changing refrigerant and compressor oil and when replacing parts, make sure that the material or the part to be used is appropriate to the A/C installed in the vehicle being serviced. Use of incorrect one will result in leakage of refrigerant, damage in parts or other faulty condition.

NOTE:

For the items with asterisk (*) in the "CONTENTS" below, refer to the same section of the Service Manual mentioned in the "Foreword" of this manual.

CONTENTS

General Description 1B-3
Refrigerant Type Construction ..... *
Air Conditioning System Description ..... *
Major Components of A/C System 1B-3
A/C System Wiring Circuit Diagram 1B-4
Diagnosis 1B-6
A/C System Symptom Diagnosis 1B-6
Abnormal Noise Diagnosis of A/C System ..... *
Abnormal noise from compressor ..... *
Abnormal noise from magnetic clutch ..... *
Abnormal noise from tubing ..... *
Abnormal noise from condenser assembly ..... *
Abnormal noise from crankshaft pulley ..... *
Abnormal noise from tension pulley ..... *
Abnormal noise from A/C evaporator ..... *
Abnormal noise from blower motor ..... *
A/C System Performance Inspection ..... *
Performance diagnosis table ..... *
On-Vehicle Service 1B-8
Operation Procedure for Refrigerant Charge 1B-8
Recovery ..... *
Replenishing compressor oil 1B-9
When replacing other part ..... *
Evacuation of A/C system ..... *

A/C system check for pressure leaks ..... *
Charge ..... *
Removing manifold gauge set ..... *
Leak test ..... *
Precautions on Servicing A/C System ..... *
Refrigerant line ..... *
Handling refrigerant HFC-134a (R-134a) ..... *
Refrigerant recovery ..... *
Refrigerant charge ..... *
Procedure After ECM Replacement (Z13DT Engine Model) 1B-9
Condenser Assembly On-Vehicle Inspection ..... *
Condenser Assembly Removal and Installation 1B-10
Receiver / Dryer Removal and Installation 1B-11
Cooling Unit (Evaporator) Components 1B-13
Cooling Unit (Evaporator) Removal and Installation 1B-14
Cooling Unit (Evaporator) Inspection ..... *
Expansion Valve Inspection ..... *
Expansion Valve Removal and Installation ..... *
Pressure Sensor Inspection (Z13DT Engine) 1B-15
Pressure Sensor Removal and Installation (Z13DT Engine) 1B-16
A/C Switch Inspection ..... *
A/C Relay Inspection (Z13DT Engine) 1B-16
Compressor Relay Inspection ..... *
Compressor Assembly Removal and Installation 1B-17
Compressor Drive Belt Inspection and Adjustment 1B-18
Compressor Drive Belt Replacement 1B-18
Magnet Clutch Inspection 1B-18
Relief Valve Inspection 1B-19
Specifications 1B-19
Tightening Torque Specifications 1B-19
Special Tools and Equipment 1B-20
Required Service Material 1B-20
Special Tool 1B-20

General Description

Major Components of A/C System

NOTE:

For M15 engine model, refer to the same section of the Service Manual mentioned in the "Foreword" of this service manual.

For Z13DT Engine Model

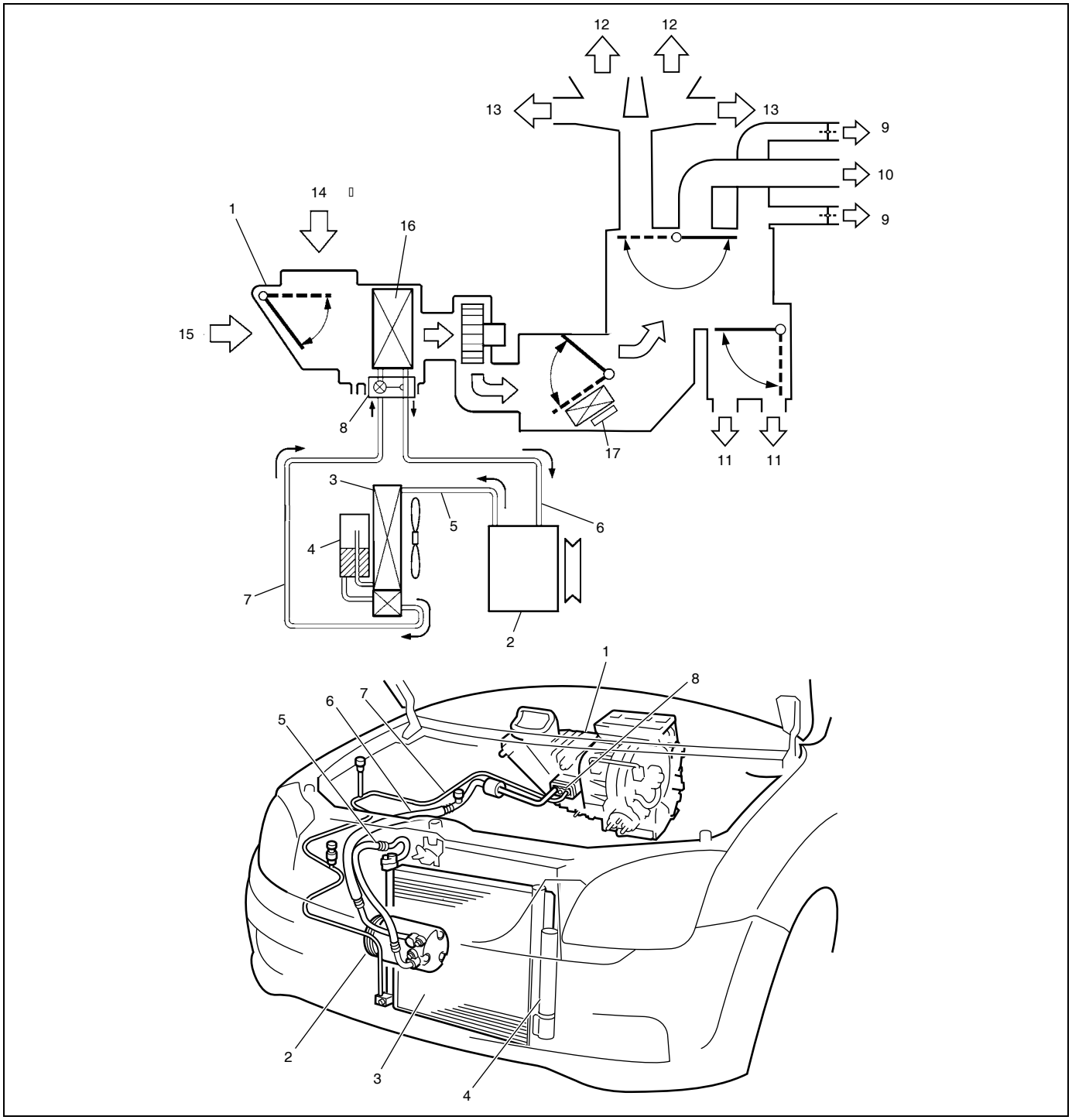

1. Cooling unit	5. Discharge hose	9. Side ventilation air	13. Side defroster air	17. Supplementary heater (if equipped)
2. Compressor	6. Suction hose	10. Center ventilation air	14. Fresh air	
3. Condenser assembly	7. Liquid pipe	11. Foot air	15. Recirculation air	
4. Receiver / dryer	8. Expansion valve	12. Front defroster air	16. Evaporator	

A/C System Wiring Circuit Diagram

NOTE:

For M15 engine model, refer to the same section of the Service Manual mentioned in the "Foreword" of this service manual.

For Z13DT Engine Model

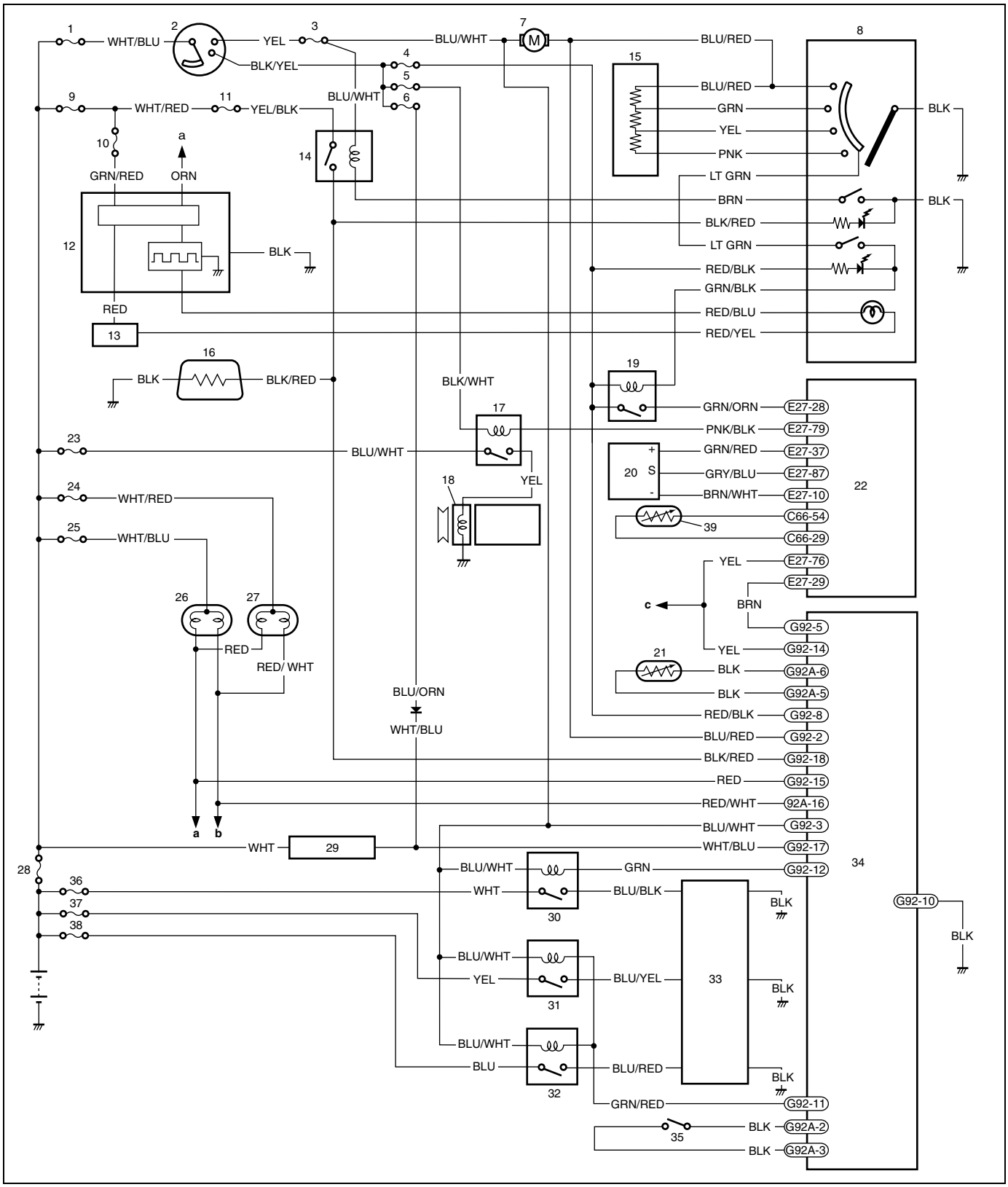

1. “IGNITION SWITCH” fuse	12. Lighting controller	23. “COMPRESSOR RELAY” fuse	34. Supplementary heater controller
2. Ignition switch	13. Junction connector	24. “HEAD LIGHT (R)” fuse	35. Full hot switch
3. “HEATER” fuse	14. Rear defogger relay	25. “HEAD LIGHT (L)” fuse	36. Supplementary heater fuse 1
4. “TURN. BACK” fuse	15. Blower motor resistor	26. Left head light	37. Supplementary heater fuse 2
5. “IG” fuse	16. Rear defogger	27. Right head light	38. Supplementary heater fuse 3
6. “METER” fuse	17. Compressor relay	28. Main fuse	39. ETC sensor
7. Blower motor	18. Magnet clutch	29. Generator	a: To lightening switch
8. Heater control panel	19. A/C relay	30. Supplementary heater relay 1	b: To lightening switch
9. “CIRCUIT FUSE BOX” fuse	20. Pressure sensor	31. Supplementary heater relay 2	c: To fuel heating relay
10. “REAR FOG” fuse	21. Water temperature sensor	32. Supplementary heater relay 3	
11. “REAR DEFG” fuse	22. ECM	33. Supplementary heater	

ECM and Supplementary Heater Controller Terminal Arrangements

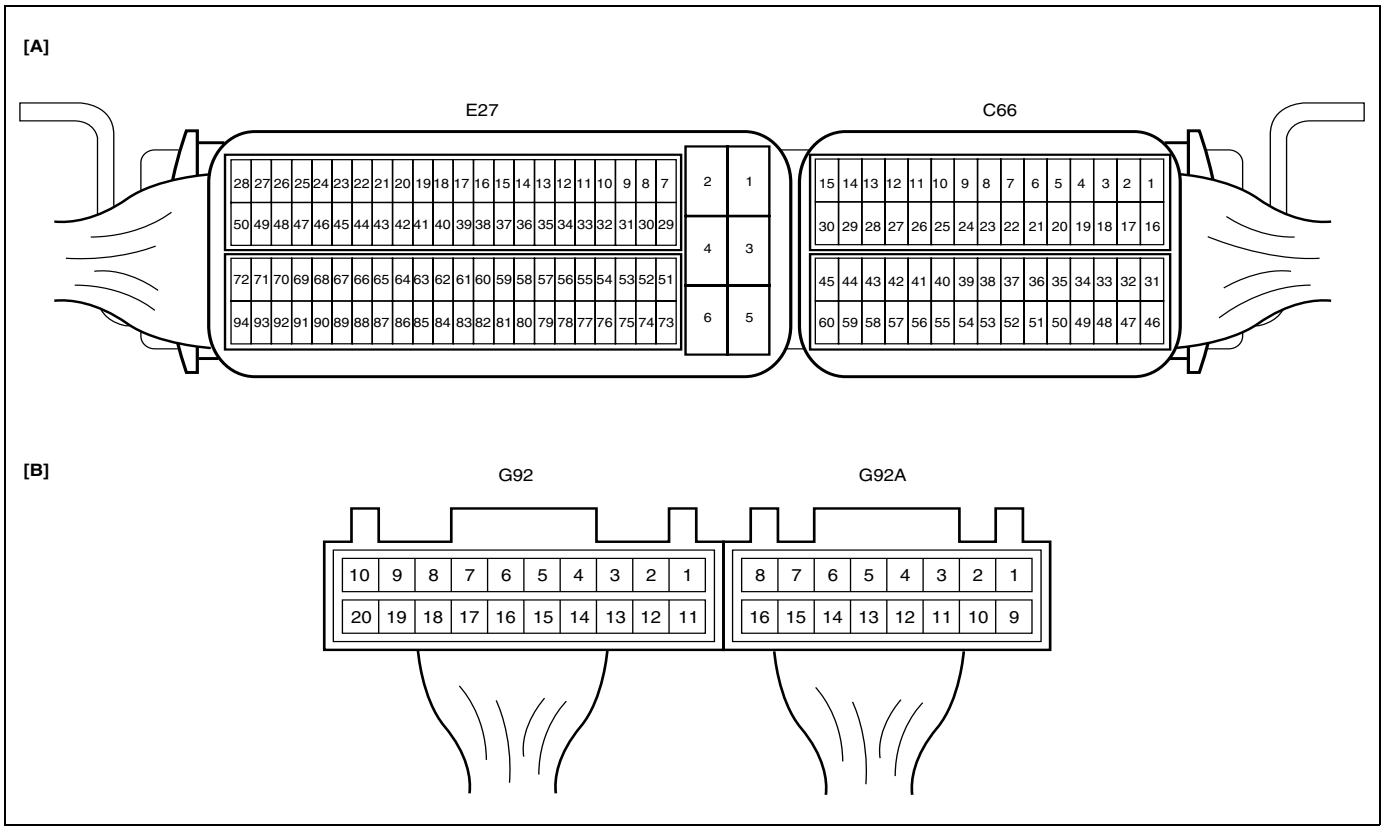

[A]: ECM coupler	[B]: Supplementary heater controller coupler

Diagnosis

A/C System Symptom Diagnosis

NOTE:

For M15 engine model, refer to the same section of the Service Manual mentioned in the "Foreword" of this service manual.

For Z13DT Engine Model

Condition	Possible Cause	Correction
No cool air comes out (A/C system does not operate)	No refrigerant	Perform recovery, evacuation and charge.
	Fuse blown	Check related fuses, and check short circuit to ground.
	A/C switch faulty	Check A/C switch.
	Blower speed selector faulty	Check blower speed selector referring to "Blower Speed Selector Inspection" in Section 1A.
	Pressure sensor faulty	Check pressure sensor.
	Wiring or grounding faulty	Repair as necessary.
	ECT sensor faulty	Check ECT sensor referring to Section 6E3.
	ECM and/or its circuit faulty	Check ECM and its circuit referring to Section 6E3.
	Magnet clutch faulty	Check magnet clutch.
	Belt loosened or broken	Adjust or replace belt.
	Compressor faulty	Check compressor.
	Compressor relay faulty	Check compressor relay.
No cool air comes out (A/C condenser cooling fan motor does not operate)	Fuse blown	Check related fuses, and check for short circuit to ground.
	Wiring or grounding faulty	Repair as necessary.
	Radiator cooling fan motor relay faulty	Check radiator cooling fan motor relay.
	Radiator cooling fan motor faulty	Check radiator cooling fan motor.
	ECM and/or its circuit faulty	Check ECM and its circuit referring to Section 6E3.
No cool air comes out (Blower motor does not operate)	Fuse blown	Check related fuses, and check for short circuit to ground.
	Blower motor resistor faulty	Check blower motor resistor referring to "Blower Motor Resistor Inspection" in Section 1A.
	Blower speed selector faulty	Check blower speed selector referring to "Blower Speed Selector Inspection" in Section 1A.
	Wiring or grounding faulty	Repair as necessary.
	Blower motor faulty	Check blower motor referring to "Blower Motor Inspection" in Section 1A.

Condition	Possible Cause	Correction
Cool air does not come out or insufficient cooling (A/C system normal operation)	Insufficient or excessive charge of refrigerant	Check charge of refrigerant and system for leaks.
	Condenser clogged	Check condenser.
	A/C evaporator clogged or frosted	Check A/C evaporator and A/C evaporator temperature sensor.
	Expansion valve faulty	Check expansion valve.
	Desiccant clogged	Check receiver / dryer
	Belt loosened or broken	Adjust or replace belt.
	Magnetic clutch faulty	Check magnetic clutch.
	Compressor faulty	Check compressor.
	Air in A/C system	Replace desiccant, and perform evacuation and charge.
	Air leaking from heater and cooling unit or air duct	Repair as necessary.
	Heater and ventilation system faulty	Check air inlet box (cooling unit), heater control assembly and heater unit.
	Blower motor faulty	Check blower motor referring to “Blower Motor Inspection” in Section 1A.
	Excessive compressor oil existing in A/C system	Pull out excess compressor oil in A/C system circuit, and check compressor.
Cool air does not come out only intermittently	Wiring connection faulty	Repair as necessary.
	Expansion valve faulty	Check expansion valve.
	Excessive moisture in A/C system	Replace receiver / dryer, and perform evacuation and charge.
	Magnetic clutch faulty	Check magnetic clutch.
	Excessive charge of refrigerant	Check charge of refrigerant.
Cool air comes out only at high speed	Condenser clogged	Check condenser.
	Insufficient charge of refrigerant	Check for charge of refrigerant.
	Air in A/C system	Replace receiver / dryer, and perform evacuation and charge.
	Belt loosened or broken	Adjust or replace belt.
	Compressor faulty	Check compressor.
	Radiator cooling fan motor faulty	Check radiator cooling fan motor.
	Radiator cooling fan motor relay faulty	Check radiator cooling fan motor relay.
	Radiator cooling fan blade faulty	Check radiator cooling fan blade.
Cool air does not come out only at high speed	Excessive charge of refrigerant	Check for charge of refrigerant.
	A/C evaporator frosted	Check A/C evaporator and A/C evaporator temperature sensor.
Insufficient airflow of cooled air	A/C evaporator clogged or frosted	Check A/C evaporator and A/C evaporator temperature sensor.
	Air leaking from cooling unit or air duct	Repair as necessary.
	Blower motor faulty	Check blower motor referring to “Blower Motor Inspection” in Section 1A.
	Wiring or grounding faulty	Repair as necessary.

On-Vehicle Service

Operation Procedure for Refrigerant Charge

NOTE:

For M15 engine model, refer to the same section of the Service Manual mentioned in the "Foreword" of this service manual.

For Z13DT Engine Model

WARNING:

- **Your eyes should not be exposed to refrigerant (liquid).**
  Any liquid HFC-134a (R-134a) escaping by accident shows a temperature as low as approximately –6 °C (21 °F) below freezing point. Should liquid HFC-134a (R-134a) get into your eyes, it may cause a serious injury. To protect your eyes against such accident, it is necessary to always wear goggles. Should it occur that HFC-134a (R-134a) strikes your eyes, consult a doctor immediately.
  - **Do not use your hand to rub the affected eye(s). Instead, use quantities of fresh cold water to splash it over the affected area to gradually raise temperature of such area above freezing point.**
  - **Obtain proper treatment as soon as possible from a doctor or eye specialist.**
- **Should the HFC-134a (R-134a) liquid come into contact with your skin, the affected area should be treated in the same manner as when skin is frostbitten or frozen.**
- **Refrigerant must not be handled near where welding or steam cleaning is performed.**
- **Refrigerant should be kept at a cold and dark place. It should never be stored where a high temperature is anticipated, e.g. where exposed to direct sun light, close to fire or inside vehicle (including trunk room).**
- **Avoid breathing fumes produced when HFC-134a (R-134a) is burned. Such fumes may be hazardous to health.**

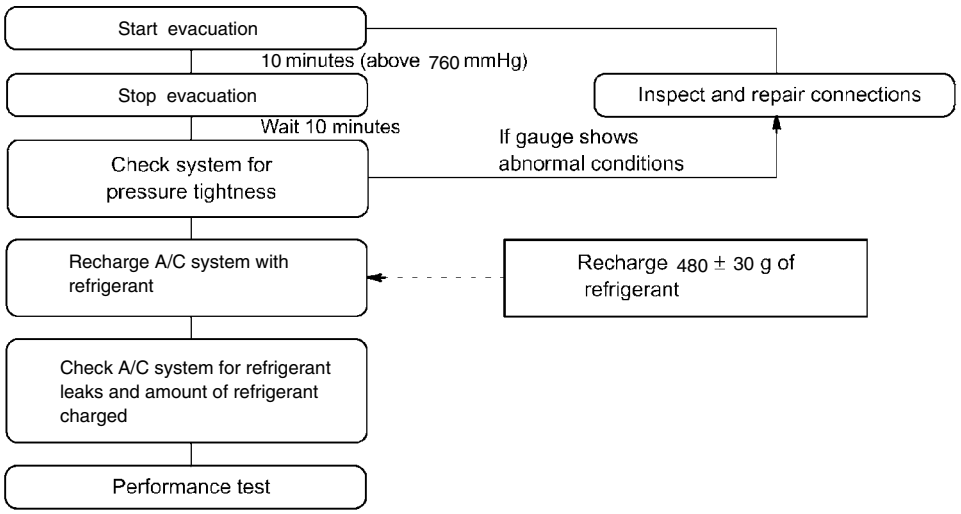
Start evacuation
10 minutes (above 760 mmHg)
Stop evacuation
Wait 10 minutes
Check system for pressure tightness
If gauge shows abnormal conditions
Inspect and repair connections
Recharge A/C system with refrigerant
Recharge 480 ± 30 g of refrigerant
Check A/C system for refrigerant leaks and amount of refrigerant charged
Performance test

Replenishing compressor oil

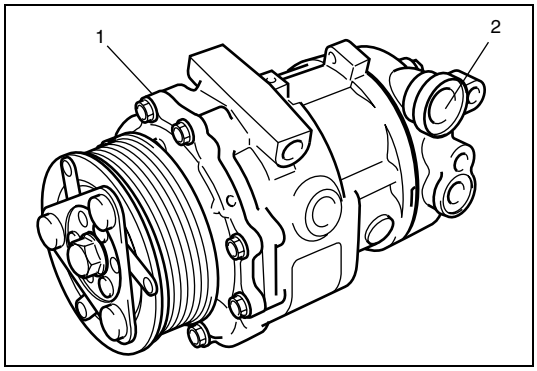

NOTE:

For M15 engine model, refer to the same section of the Service Manual mentioned in the "Foreword" of this service manual.

For Z13DT Engine Model

It is necessary to replenish specified amount of compressor oil to compressor (1) from compressor suction side hole (2) before evacuating and charging refrigerant.

When Charging Refrigerant Only

When evacuating and charging refrigerant without replacing any component part, replenish the same amount of measured oil when recovering refrigerant (if not measured, replenish 30 cc oil).

When Replacing Compressor

CAUTION:

Be sure to use P/N: 99000-990C5-00A compressor oil or an equivalent compressor oil.

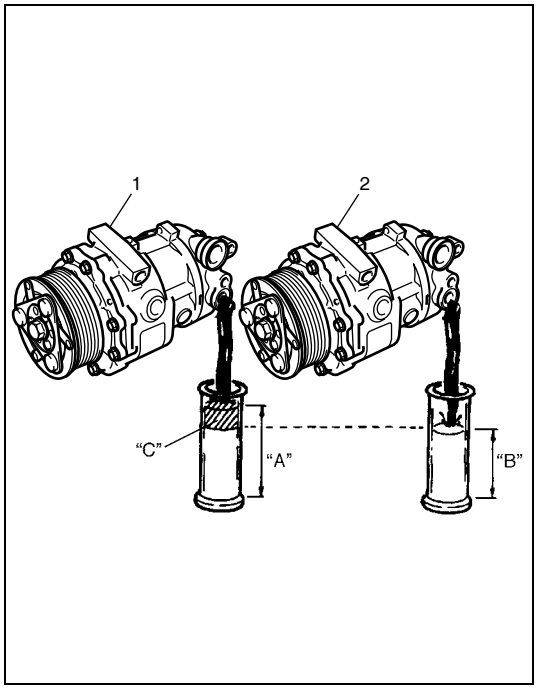

Compressor oil is sealed in each new compressor by the amount required for A/C system. Therefore, when using a new compressor for replacement, drain oil from it by the amount calculated as follows.

"C" = "A" – "B"
"C": Amount of oil to be drained
"A": Amount of oil sealed in a new compressor
"B": Amount of oil remaining in removed compressor

NOTE:

Compressor assembly supplied from factory is filled up with the following amount of oil.

Oil amount in compressor

100 cm^3 (100 cc, 6.1 in^3)

1.	New compressor
2.	Removed compressor

Procedure After ECM Replacement (Z13DT Engine Model)

Refer to "Procedure after ECM replacement" under "ECM Registration" in Section 6E3.

Condenser Assembly Removal and Installation

CAUTION:

Be careful not to damage condenser fins. If condenser fin is bent, straighten it by using flat head screwdriver or pair of pliers.

Removal

For Z13DT Engine Model

1) Disconnect negative (–) cable at battery.
2) Recover refrigerant from A/C system by referring to “Recovery” in this section.

NOTE:

The amount of removed compressor oil must be measured for replenishing compressor oil.

3) Remove front bumper referring to “Front Bumper and Rear Bumper” in Section 9.

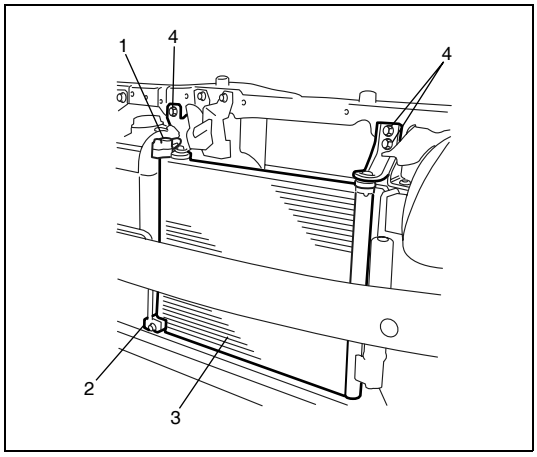

4) Disconnect discharge hose (1) and liquid pipe (2) from condenser assembly (3).
5) Remove condenser bracket bolts (4).
6) Remove condenser assembly (3).

For M15 Engine Model

NOTE:

For M15 engine model, refer to the same section of the Service Manual mentioned in the “Foreword” of this service manual.

Installation

For Z13DT Engine Model

Reverse removal procedure to install condenser noting the following instructions.

- Replenish specified amount of compressor oil to compressor suction side by referring to “Replenishing compressor oil” in this section.
- Evacuate and charge refrigerant by referring to “Evacuation of A/C System” and “Charge” in this section.

For M15 Engine Model

NOTE:

For M15 engine model, refer to the same section of the Service Manual mentioned in the "Foreword" of this service manual.

Receiver / Dryer Removal and Installation

Removal

For Z13DT Engine Model

1) Remove refrigerant from A/C system by referring to "Recovery" in this section.

NOTE:

The amount of removed compressor oil must be measured for replenishing compressor oil.

2) Remove front bumper referring to "Front Bumper and Rear Bumper" in Section 9.

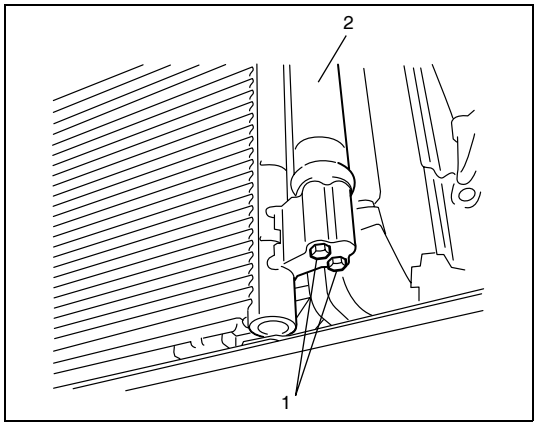

3) Loosen receiver / dryer attachment bolts (1).
4) Remove receiver / dryer (2).

For M15 Engine Model

NOTE:

For M15 engine model, refer to the same section of the Service Manual mentioned in the "Foreword" of this service manual.

Installation

For Z13DT Engine Model

Reverse removal procedure to install receiver / dryer noting the following instructions.

- Replenish specified amount of compressor oil to compressor suction side by referring to “Replenishing compressor oil” (Z13DT Engine) in this section.
- Be sure to install receiver / dryer (1) to proper direction as shown.
- Evacuate and charge refrigerant by referring to “Evacuation of A/C System” and “Charge” in this section.

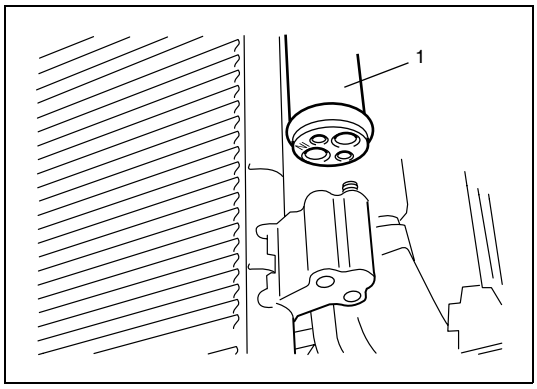

For M15 Engine Model

NOTE:

For M15 engine model, refer to the same section of the Service Manual mentioned in the “Foreword” of this service manual.

Cooling Unit (Evaporator) Components

NOTE:

For M15 engine model, refer to the same section of the Service Manual mentioned in the "Foreword" of this service manual.

For Z13DT Engine Model

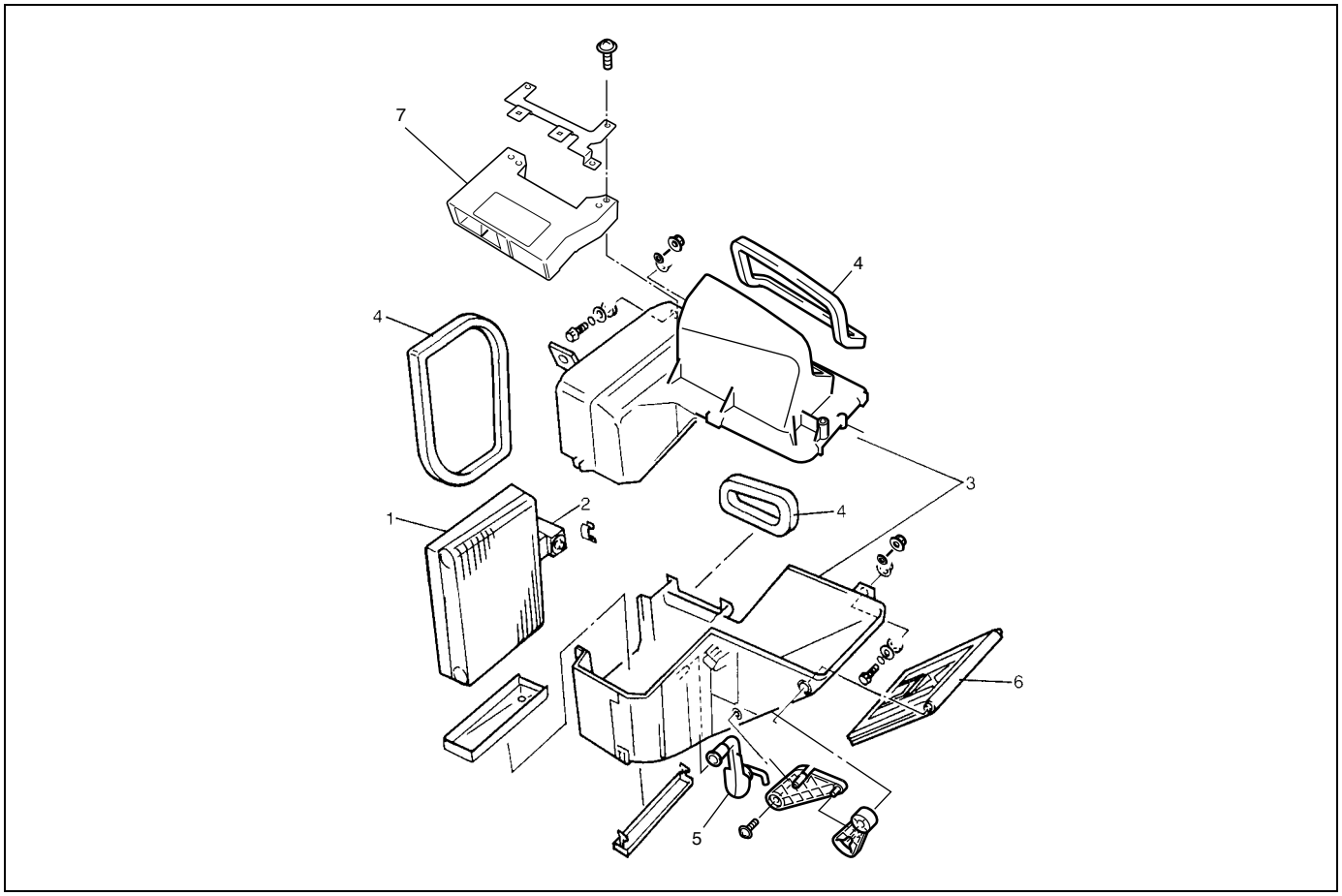

1. Evaporator	3. Evaporator case	5. Drain hose	7. Supplementary heater controller (if equipped)
2. Expansion valve	4. Packing	6. Air inlet door	

Cooling Unit (Evaporator) Removal and Installation

Removal

For Z13DT Engine Model

1) Disconnect negative (–) cable at battery.
2) If equipped with air bag system, disable air bag system referring to “Disabling Air Bag System” in Section 10B.
3) Recover refrigerant from refrigeration system by using recovery and recycling equipment referring to “Operation Procedure for Refrigerant Charge” in this section.
4) Remove heater control cable and main harness clamp.
5) Remove 20-pin connector from supplementary heater controller and two connectors located on supplementary heater controller.

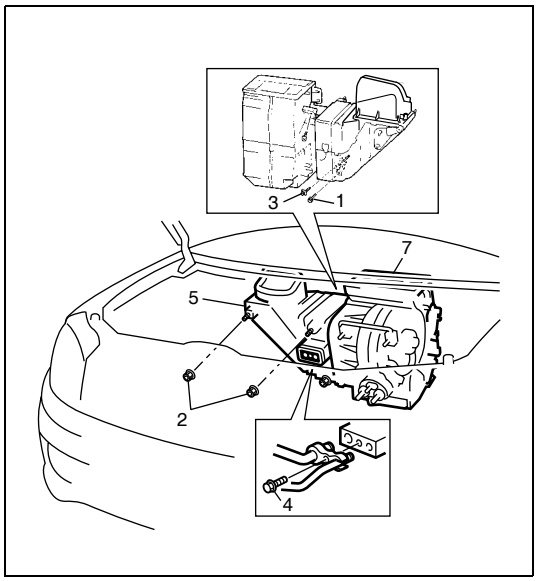

6) Loosen suction hose and liquid pipe bolt (4).
7) Loosen cooling unit bolt (1), nut (2) and screw (3) as shown in figure.
8) Remove cooling unit (5).

For M15 Engine Model

NOTE:

For M15 engine model, refer to the same section of the Service Manual mentioned in the “Foreword” of this service manual.

Installation

For Z13DT Engine Model

Reverse removal sequence to install cooling unit, noting the following points.

- If cooling unit or evaporator is replaced, pour 25 cc of refrigerating oil to compressor suction-side.

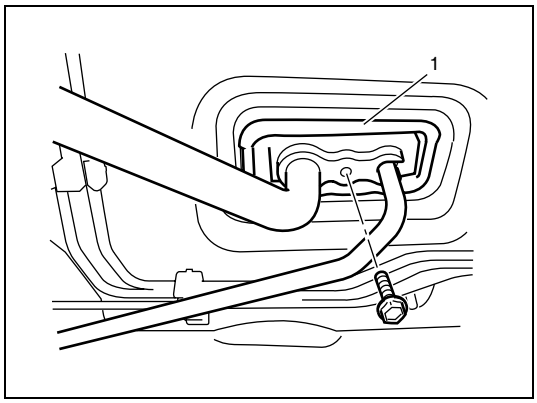

- Install uniformly the padding (1) to installation hole.
- Evacuate and charge system according to previously described procedure.
- Adjust heater control cable, referring to “Heater Control Lever Assembly Removal and Installation” in Section 1A.
- Enable air bag system, if equipped.

For M15 Engine Model

NOTE:

For M15 engine model, refer to the same section of the Service Manual mentioned in the “Foreword” of this service manual.

Pressure Sensor Inspection (Z13DT Engine)

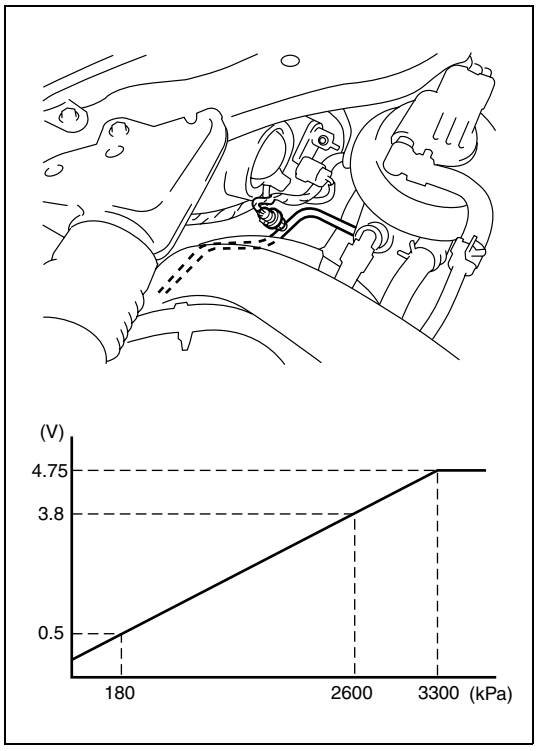

1) Connect manifold gauge to A/C system and operate A/C system.
2) Check output voltage for pressure sensor (1) between GRY/BLU and BRN/WHT, and then compare measured voltage with specified voltage in graph.

If it does not show such characteristic as shown in graph, replace pressure sensor.

Pressure Sensor Removal and Installation (Z13DT Engine)

Removal

1) Recover refrigerant from refrigeration system by using recovery and recycling equipment referring to “Operation Procedure for Refrigerant Charge” in this section.
2) Disconnect negative (–) cable at battery.
3) Remove pressure sensor (1).

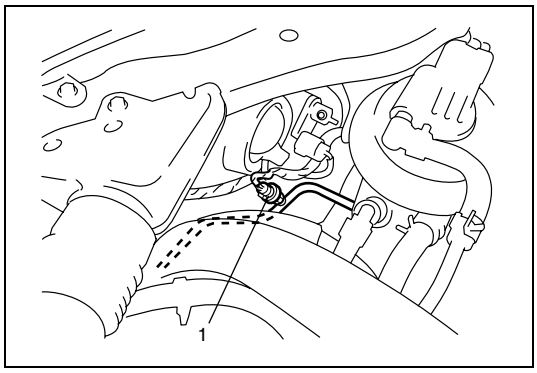

Installation

Reverse removal procedure for installation, noting the following points.

- Apply compressor oil to dual pressure switch O-ring.
- Evacuate and charge system according to previously described procedure.

Tightening torque

Pressure sensor: 11 N·m (1.1 kg-m, 8.0 lb-ft)

A/C Relay Inspection (Z13DT Engine)

1) Disconnect negative (–) cable at battery.
2) Remove steering column hole cover.
3) Remove A/C relay (1).
4) Check that there is no continuity between terminal “c” and “d”. If there is continuity, replace relay.
5) Connect battery positive (+) terminal to terminal “b” of relay. Connect battery negative (–) terminal to terminal “a” of relay. Check for continuity between terminal “c” and “d”. If there is no continuity when relay is connected to the battery, replace relay.

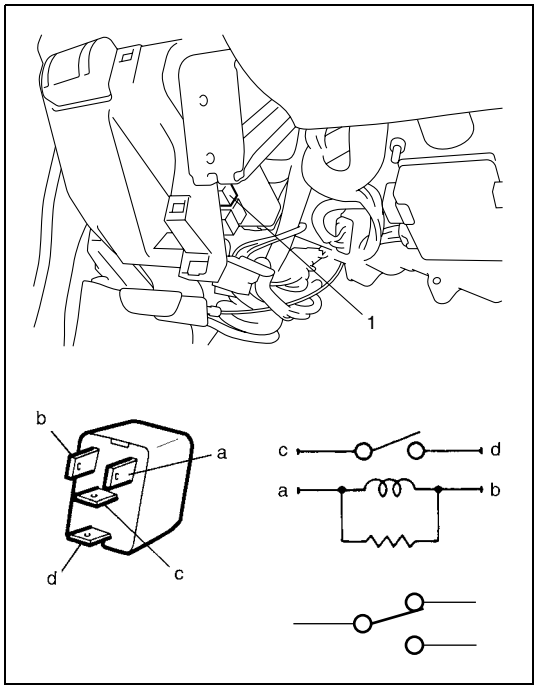

Compressor Assembly Removal and Installation

Removal

For Z13DT Engine Model

1) Run engine at idle speed with air conditioning ON for 10 minutes. After that stop the engine.
2) Disconnect negative (–) cable at battery.
3) Remove front bumper by referring to “Front Bumper and Rear Bumper” in Section 9.

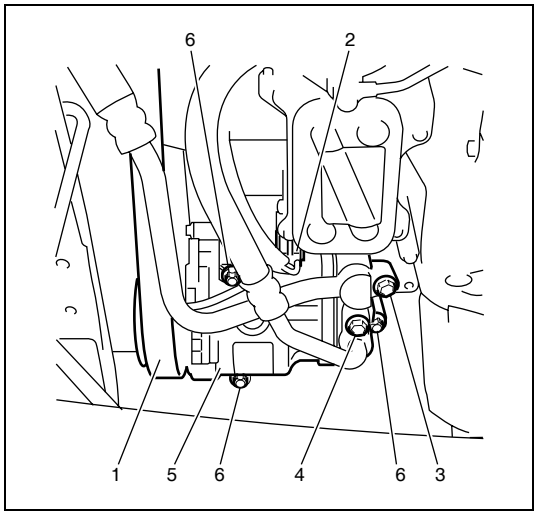

4) Remove belt (1).
5) Disconnect magnet clutch lead wire coupler (2).
6) Disconnect suction pipe (3) and discharge hose (4) from compressor (5).

NOTE:

Cap open fittings immediately to keep moisture out of system.

7) Remove compressor mounting bolts (6), and then remove compressor (5) from its bracket.

For M15 Engine Model

NOTE:

For M15 engine model, refer to the same section of the Service Manual mentioned in the “Foreword” of this service manual.

Installation

For Z13DT Engine Model

Reverse removal procedure to install compressor noting the following instructions.

- If compressor is replaced, pour new compressor oil by referring to “Replenishing compressor oil” in this section.
- Evacuate and charge system by referring to “Recovery” in this section.
- Adjust drive belt tension by referring to “Compressor Drive Belt Inspection and Adjustment” in this section.

For M15 Engine Model

NOTE:

For M15 engine model, refer to the same section of the Service Manual mentioned in the “Foreword” of this service manual.

Compressor Drive Belt Inspection and Adjustment

Inspection

For Z13DT Engine Model

Refer to “Water Pump/Generator Drive Belt Tension Inspection” in Section 6B3.

For M15 Engine Model

NOTE:

For M15 engine model, refer to the same section of the Service Manual mentioned in the “Foreword” of this service manual.

Compressor Drive Belt Replacement

Replacement

For Z13DT Engine Model

Refer to “Water Pump/Generator Drive Belt Tension Inspection” in Section 6B3.

For M15 Engine Model

NOTE:

For M15 engine model, refer to the same section of the Service Manual mentioned in the “Foreword” of this service manual.

Magnet Clutch Inspection

For Z13DT Engine Model

- Check armature plate and magnet clutch pulley for wear and oil soaked conditions respectively.
- Check magnet clutch pulley bearing for noise, wear and grease leakage.
- Measure magnet clutch coil for resistance at 20 °C (68 °F).
  If the measured resistance does not remain within above tolerance, replace compressor assembly.

Standard Resistance: approximately 3.7 Ω

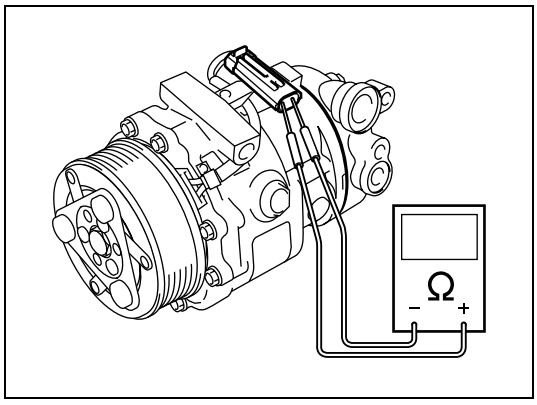

For M15 Engine Model

NOTE:

For M15 engine model, refer to the same section of the Service Manual mentioned in the "Foreword" of this service manual.

Relief Valve Inspection

For Z13DT Engine Model

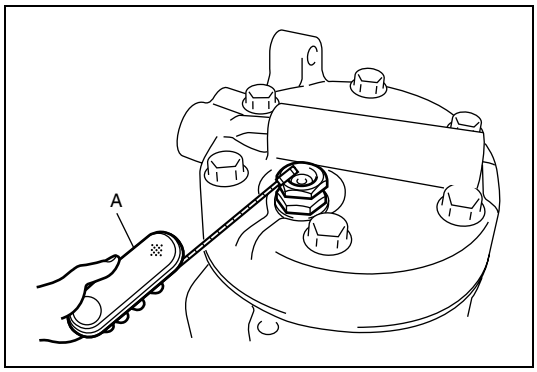

By using special tool, check if there is refrigerant leakage.
If there is refrigerant leakage, replace the compressor assembly.

Special tool
(A): 09990–86011

For M15 Engine Model

NOTE:

For M15 engine model, refer to the same section of the Service Manual mentioned in the "Foreword" of this service manual.

Specifications

Tightening Torque Specifications

For M15 Engine Model

NOTE:

For M15 engine model, refer to the same section of the Service Manual mentioned in the "Foreword" of this service manual.

For Z13DT Engine Model

Fastening part		Tightening torque		
		N•m	kg-m	lb-ft
Refrigerant line	8 mm pipe	13	1.3	9.5
	12 mm pipe	23	2.3	17.0
	14.5 mm pipe	33	3.3	24.0
Pressure sensor		11	1.1	8.0

Special Tools and Equipment

Required Service Material

For M15 Engine Model

NOTE:

For M15 engine model, refer to the same section of the Service Manual mentioned in the "Foreword" of this service manual.

For Z13DT Engine Model

Material	Recommended SUZUKI product (Part Number)	Use
Compressor oil (refrigerant oil)	COMPRESSOR OIL P/No.: 99000-990C5-00A	• O-ring • Each component

Special Tool

For M15 Engine Model

NOTE:

For M15 engine model, refer to the same section of the Service Manual mentioned in the "Foreword" of this service manual.

For Z13DT Engine Model

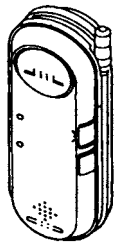

09990-86011
Gas leak detector

SECTION 3B

MANUAL RACK AND PINION

WARNING:

For vehicles equipped with Supplemental Restraint (Air Bag) System:

- **Service on and around the air bag system components or wiring must be performed only by an authorized SUZUKI dealer. Refer to "Air Bag System Components and Wiring Location View" under "General Description" in air bag system section in order to confirm whether you are performing service on or near the air bag system components or wiring. Please observe all WARNINGS and "Service Precautions" under "On-Vehicle Service" in air bag system section before performing service on or around the air bag system components or wiring. Failure to follow WARNINGS could result in unintentional activation of the system or could render the system inoperative. Either of these two conditions may result in severe injury.**
- **Technical service work must be started at least 90 seconds after the ignition switch is turned to the "LOCK" position and the negative cable is disconnected from the battery. Otherwise, the system may be activated by reserve energy in the Sensing and Diagnostic Module (SDM).**

NOTE:

- **All steering gear fasteners are important attaching parts in that they could affect the performance of vital parts and systems, and/or could result in major repair expense. They must be replaced with one of the same part number or with an equivalent part if replacement becomes necessary. Do not use a replacement part of lesser quality or substitute design. Torque values must be used as specified during reassembly to assure proper retention of these parts.**
- **For the items with asterisk (*) in the "CONTENTS" below, refer to the same section of the Service Manual mentioned in "Foreword" of this manual.**

CONTENTS

General Description ..... *
Rack and Pinion Steering Construction ..... *
Diagnosis ..... *
Diagnosis Table ..... *
Steering Wheel Check ..... *
Steering Rack Boot Check ..... *
Tie Rod End Boot Check ..... *
Steering Shaft Joint Check ..... *
Tie Rod End Check ..... *
On-Vehicle Service **3B-2**
Rack and Pinion Assembly Components ..... *
Tie Rod End Removal and Installation 3B-2
Steering Gear Case Removal and Installation (for Gasoline Engine Model) ..... *
Steering Gear Case Removal and Installation (for Diesel Engine Model) 3B-2
Unit Repair ..... *
Rack Boot / Tie Rod Removal and Installation ..... *
Steering Rack Plunger Removal and Installation ..... *
Steering Rack Plunger Inspection ..... *
Steering Pinion Removal and Installation ..... *
Steering Pinion Inspection ..... *
Steering Rack Removal and Installation ..... *
Steering Rack Inspection ..... *
Pinion Bearing Removal and Installation ..... *
Tightening Torque Specifications **3B-7**
Required Service Material ..... *
Special Tool ..... *

On-Vehicle Service

Tie Rod End Removal and Installation

Installation

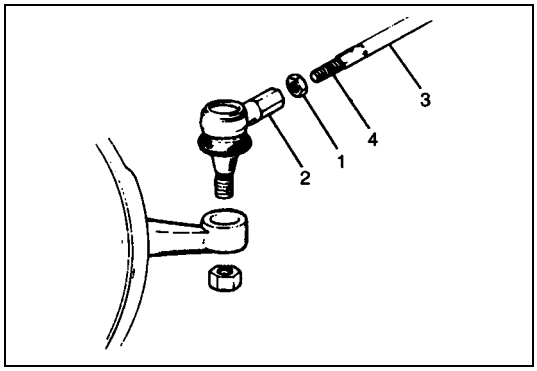

1) Install tie rod end lock nut (1) and tie rod end (2) to tie rod (3). Align lock nut with mark (4) on tie rod thread.

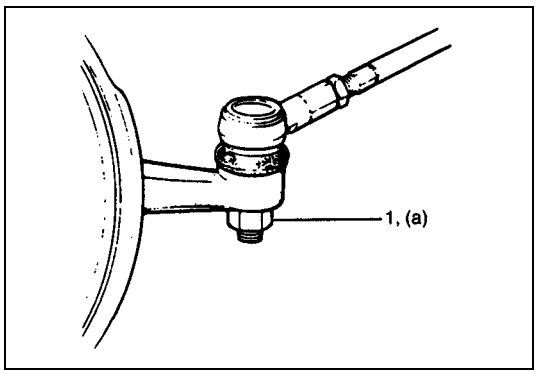

2) Connect tie rod end to knuckle. Tighten new tie rod end nut (1) to specified torque.

Tightening torque
Tie rod end nut (a): 40 N·m (4.0 kg-m, 29.0 lb-ft)

3) Inspect for proper toe (Refer to “Front End Alignment”).

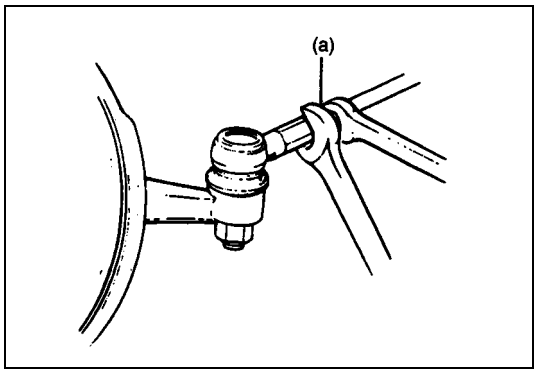

4) After confirming proper toe, tighten tie rod end lock nut to specified torque.

Tightening torque
Tie rod end lock nut (a): 45 N·m (4.5 kg-m, 32.5 lb-ft)

5) Tighten wheel bolts to specified torque and lower hoist.

Tightening torque
Wheel bolt: 95 N·m (9.5 kg-m, 69.0 lb-ft)

Steering Gear Case Removal and Installation (for Diesel Engine Model)

Removal

CAUTION:
Be sure to set front wheels in straight direction and remove ignition key from key cylinder before these steps, otherwise contact coil of air bag system may get damaged.

1) Slide driver’s seat as far back as possible.

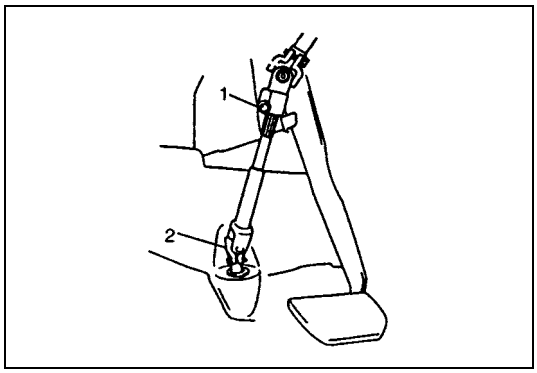

2) For ease of installation, loosen steering shaft upper joint bolt (1) but don't remove.
3) Remove steering shaft lower joint bolt (2).
4) Disconnect lower joint from pinion.
5) Hoist vehicle and remove both wheels referring to "Wheel Removal and Installation" in Section 3F.

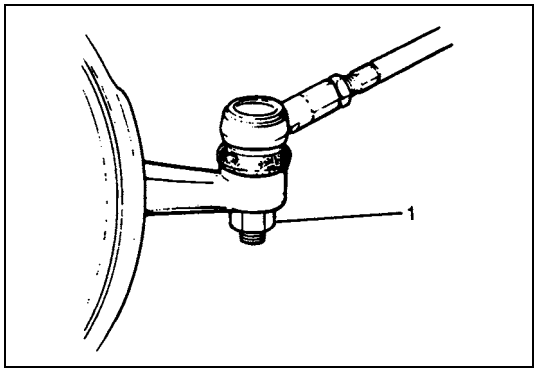

6) Remove tie rod end nuts (1) from both steering knuckles.

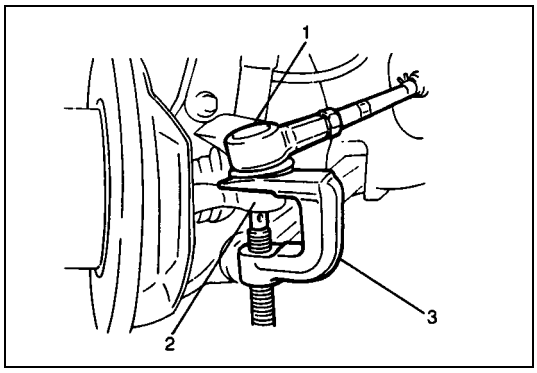

7) Disconnect both tie rod ends (1) from knuckles (2), using puller (3).

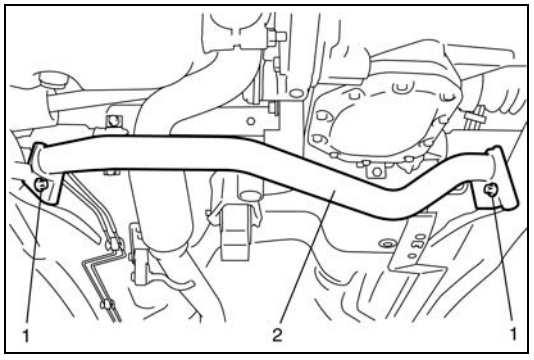

8) Remove lower member mounting bolts (1) and lower member (2).

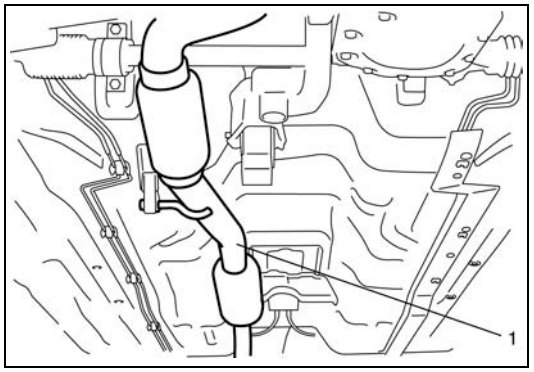

9) Remove exhaust pipe (1) referring to "Exhaust Pipe".

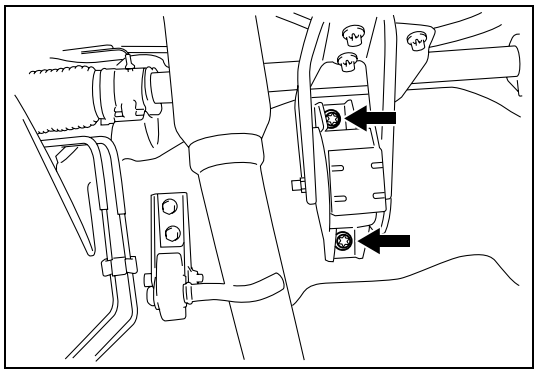

10) Support engine with transmission by transmission jack and then remove engine rear mount bracket from floor panel.

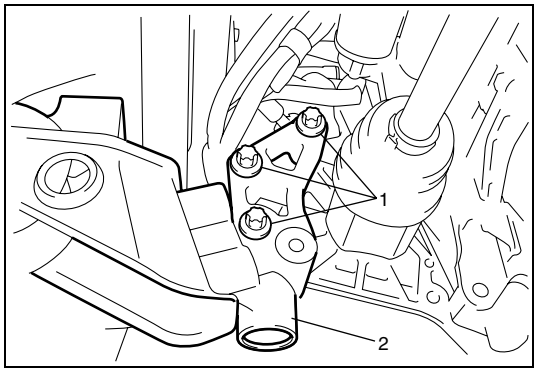

11) Remove engine mount bracket bolts (1) and engine rear mount bracket (2).

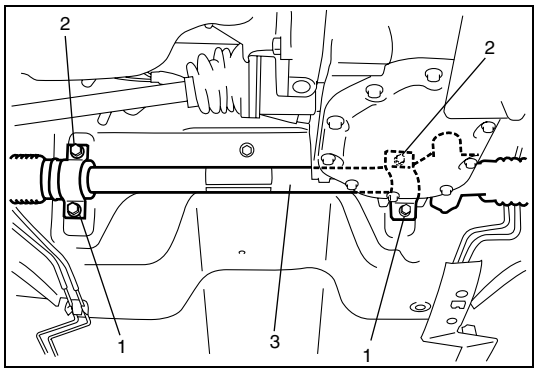

12) Remove steering gear case mounting bolts (1), nuts (2) and gear case brackets, then remove gear case (3).

Installation

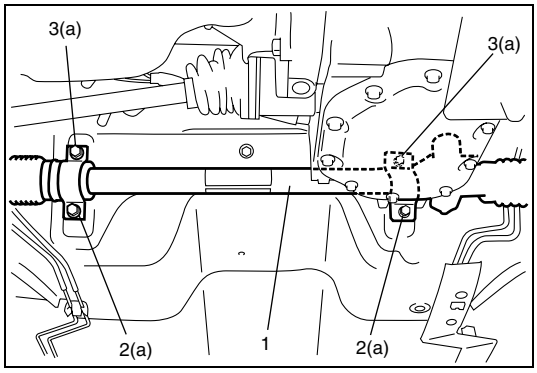

1) Apply grease to inside of pinion packing and install pinion packing onto pinion. Mount steering gear case (1) to body and tighten gear case mounting bolts (2) and nuts (3) to specified torque.

Tightening torque
Steering gear case mounting bolt and nut
(a): 25N·m (2.5 kg-m, 18.0 lb-ft)

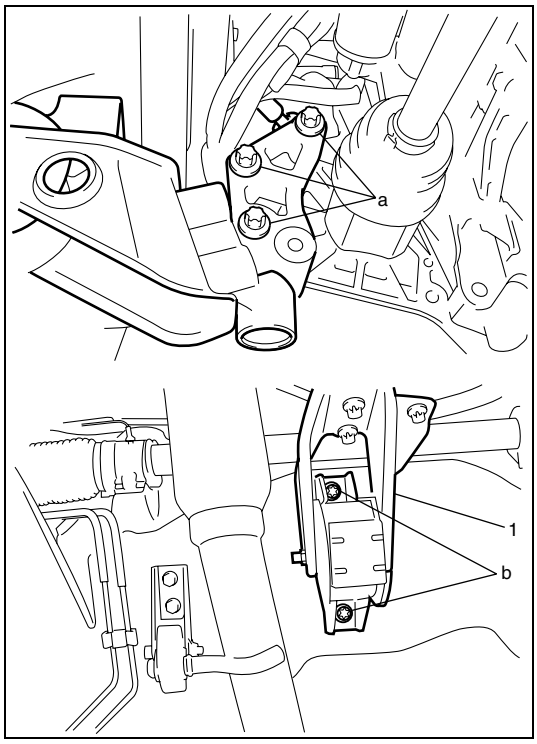

2) Remount the engine with transmission and tighten each bolt to specified torque.

Tightening torque
Engine rear mount bracket bolt
(a): 85 N·m (8.5 kg-m, 61.5 lb-ft)
Engine rear mounting bolt
(b): 55N·m (5.5 kg-m, 40.0 lb-ft)

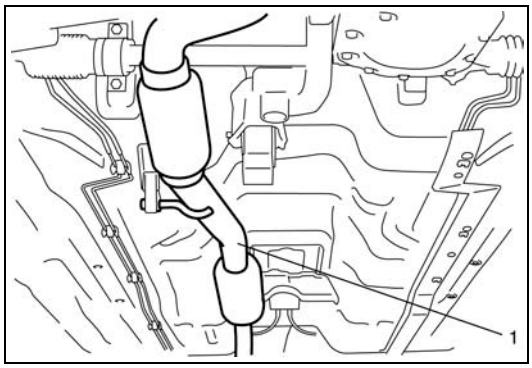

3) Install exhaust pipe (1) referring to “Exhaust Pipe”.

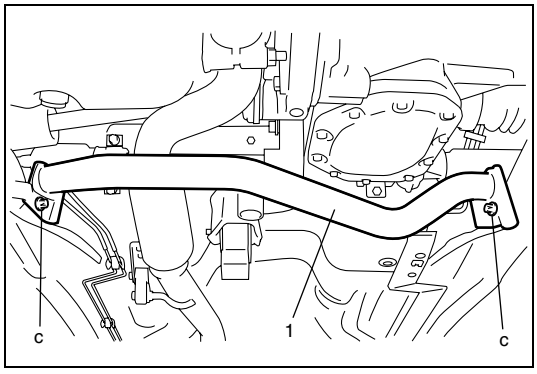

4) Install control arm cross member (1).

Tightening torque
Control arm cross member (c): 60 N·m (6.0 kg-m, 43.5 lb-ft)

5) Remove transmission jack.

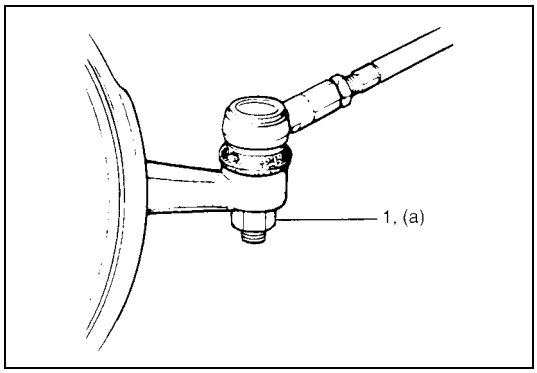

6) Install tie rod ends to knuckles (right & left). Tighten each new tie rod end nut (1) to specified torque.

Tightening torque
Tie rod end nut (a): 40 N·m (4.0 kg-m, 29.0 lb-ft)

7) Be sure that steering wheel and brake discs (right & left) are all straight-ahead position and then insert steering lower joint into steering pinion shaft.

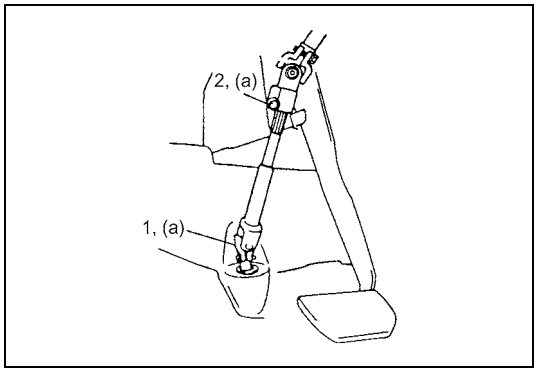

8) Tighten steering shaft joint bolts (1) and (2) to specified torque (Lower side first and then upper side).

Tightening torque
Steering shaft joint bolt (a): 28 N·m (2.8 kg-m, 20.5 lb-ft)

9) Install both wheels and tighten wheel bolts to specified torque.

Tightening torque
Wheel bolt: 95 N·m (9.5 kg-m, 69.0 lb-ft)

10) Lower hoist.
11) Check toe setting. Adjust as required (refer to “Front Wheel Alignment” in Section 3A).

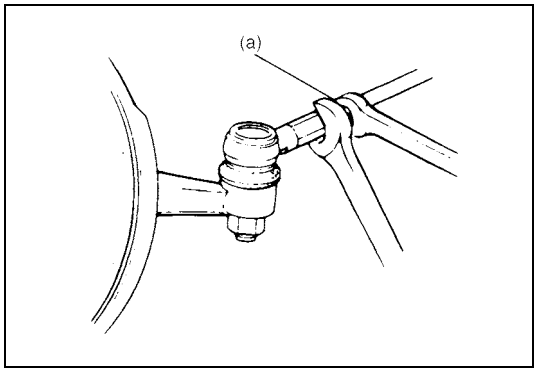

12) Tighten both tie rod end lock nuts to specified torque.

Tightening torque
Tie rod end lock nut (a): 45 N·m (4.5 kg-m, 32.5 lb-ft)

Tightening Torque Specifications

Fastening part	Tightening torque		
	N•m	kg-m	lb-ft
Steering gear case mounting bolt and nut	25	2.5	18.0
Engine rear mount bracket bolt	85	8.5	61.5
Engine rear mounting bolt	55	5.5	40.0
Control arm cross member	60	6.0	43.5
Tie rod end nut	40	4.0	29.0
Steering shaft joint bolt	28	2.8	20.5
Wheel bolt	95	9.5	69.0
Tie rod end lock nut	45	4.5	32.5

SECTION 3D

FRONT SUSPENSION

NOTE:

- **All front suspension fasteners are an important attaching part in that it could affect the performance of vital parts and systems, and/or could result in major repair expense. They must be replaced with one of the same part number or with an equivalent part if replacement becomes necessary. Do not use a replacement part of lesser quality or substitute design. Torque values must be used as specified during reassembly to assure proper retention of this part.**
- **Never attempt to heat, quench or straighten any front suspension part. Replace it with a new part or damage to the part may result.**
- **For the items with asterisk (*) in the "CONTENTS" below, refer to the same section of the Service Manual mentioned in "Foreword" of this manual.**

CONTENTS

General Description 3D-2
Front Suspension Construction 3D-2
Diagnosis 3D-3
Diagnosis Table ..... *
Stabilizer Bar and Bushing Check ..... *
Strut Assembly Check ..... *
Suspension Control Arm / Steering Knuckle Check ..... *
Suspension Control Arm Joint Check ..... *
Front Suspension Fasteners Check ..... *
Wheel Disc, Nut and Bearing Check 3D-3
On-Vehicle Service 3D-4
Strut Assembly Component ..... *
Strut Assembly Removal and Installation 3D-4
Strut Assembly Disassembly and Assembly ..... *
Stabilizer Bar and Bushings Component ..... *
Stabilizer Bar and Bushings Removal and Installation 3D-4
Wheel Hub and Steering Knuckle Component ..... *
Wheel Hub and Steering Knuckle Removal and Installation 3D-5
Wheel Hub and Steering Knuckle Disassembly and Assembly ..... *
Suspension Control Arm / Bushing Removal and Installation ..... *
Suspension Control Arm / Bushing Disassembly and Assembly ..... *
Tightening Torque Specifications 3D-7
Required Service Material ..... *
Special Tool ..... *

General Description

Front Suspension Construction

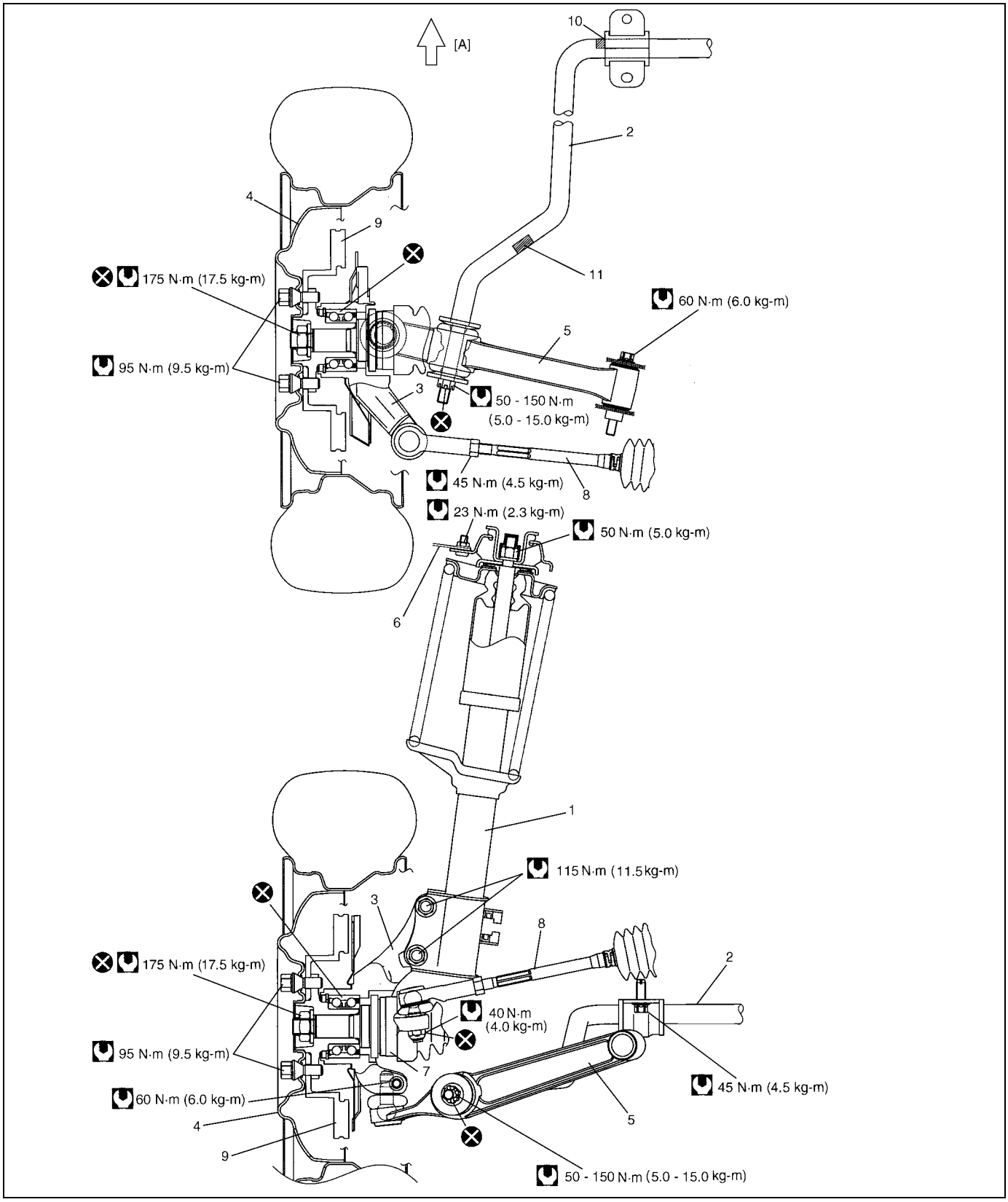

1. Strut assembly	4. Wheel	7. Drive shaft	10. Paint mark	Tightening torque
2. Stabilizer bar	5. Suspension control arm	8. Tie rod	11. Paint mark (only RH side)	Do not reuse.
3. Steering knuckle	6. Vehicle body	9. Brake disc	[A] : Forward	

Diagnosis

Wheel Disc, Nut and Bearing Check

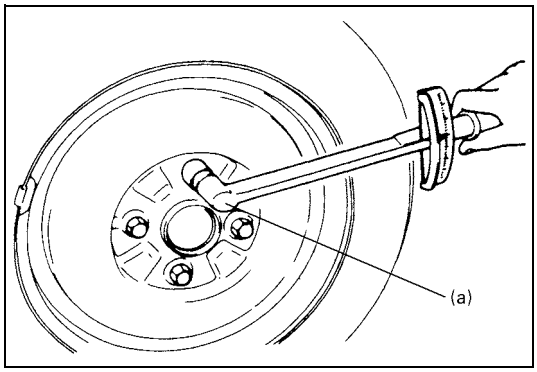

- Inspect each wheel disc for dents, distortion and cracks.
  A disc in badly damaged condition must be replaced.
- Check wheel bolts for tightness and, as necessary, retighten them to specification.

Tightening torque
Wheel bolt (a): 95 N·m (9.5 kg-m, 69.0 lb-ft)

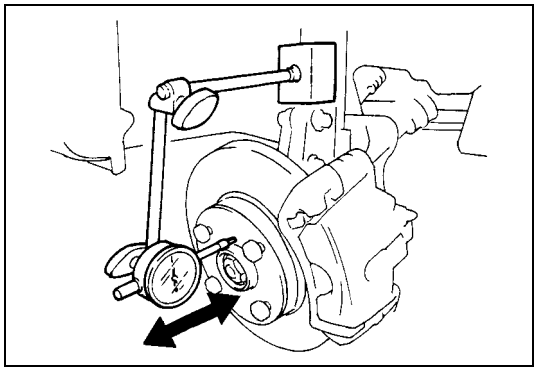

- Check wheel bearing for wear.

a) Remove wheel, referring to “Wheel Removal and Installation” in Section 3F.
b) Fix brake disc tightening wheel bolts.
c) Set a dial gauge.
d) Check wheel bearing for thrust play.
   When measurement exceeds limit, replace bearing.

Thrust play limit:
0.1 mm (0.004 in.)

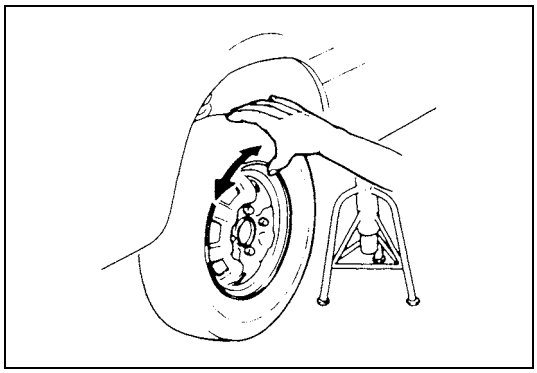

- By rotating wheel actually, check wheel bearing for noise and smooth rotation.
  If defective, replace bearing.

On-Vehicle Service

Strut Assembly Removal and Installation

Installation

Install strut assembly by reversing removal procedure, noting the following instructions.

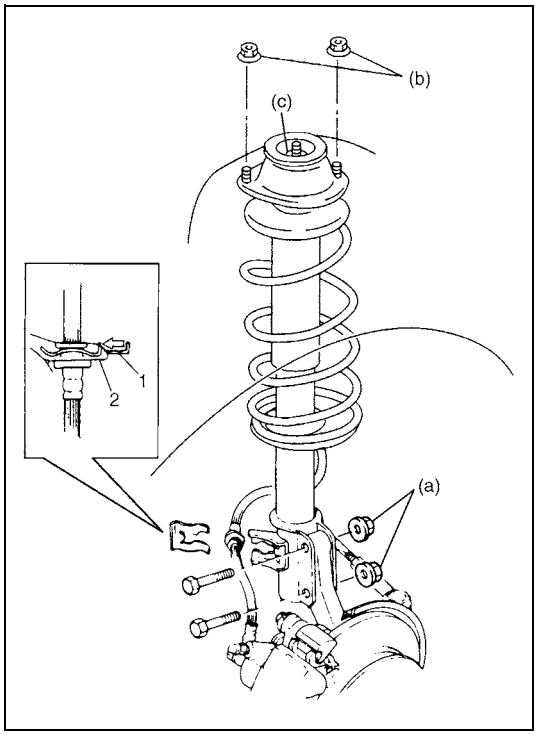

- Insert bolts in such direction as shown in figure.
- Tighten all fasteners to specified torque.

Tightening torque
Strut bracket nut (a): 115 N·m (11.5 kg-m, 83.0 lb-ft)
Strut support nut (b): 23 N·m (2.3 kg-m, 17.0 lb-ft)
Strut nut (c): 50 N·m (5.0 kg-m, 36.5 lb-ft)

CAUTION:
- **Don't twist brake hose when installing it.**
- **Install E-ring (1) as far as it fits to bracket (2) as shown in figure.**

- Tighten wheel bolts to specified torque.

Tightening torque
Wheel bolt:95 N·m (9.5 kg-m, 69.0 lb-ft)

- After installation, confirm front wheel alignment referring to "Preliminary Checks Prior to Adjusting Front Wheel Alignment" in Section 3A.

Stabilizer Bar and Bushings Removal and Installation

Installation

For installation, reverse removal procedure, noting the following instructions.

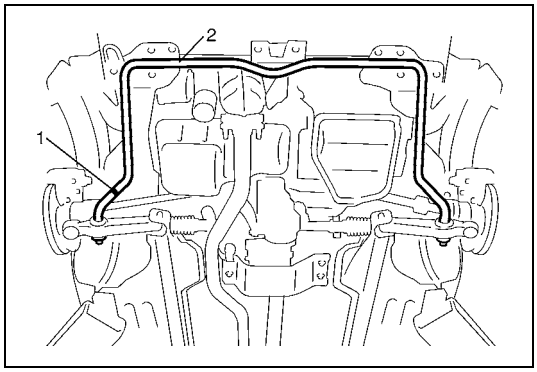

- Install stabilizer bar (2) so that paint mark (1) on it comes to the right side of vehicle.

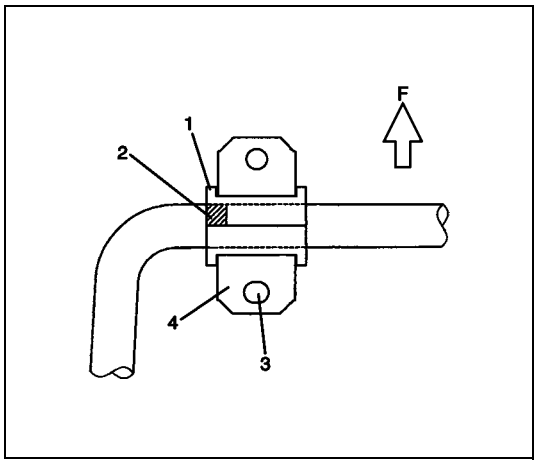

- Align the outside edge (1) of mount bushing with the outside edge (2) of paint mark as shown in figure.
- Install mount brackets (4) so that its oblong hole side (3) comes to the rear.

F: Forward

- Tighten stabilizer bar mounting bracket bolts to specified torque.

Tightening torque
Stabilizer bar mounting bracket bolt:
45 N·m (4.5 kg-m, 32.5 lb-ft)

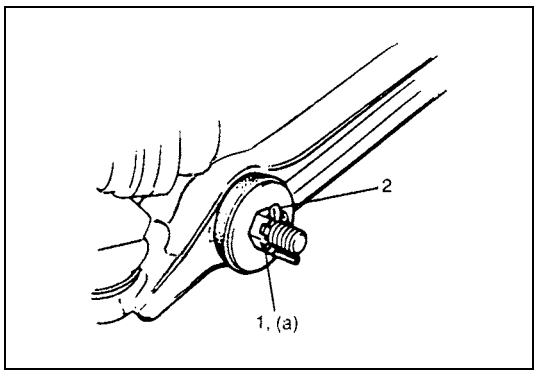

- Tighten stabilizer bar nuts (1) to specified torque.

Tightening torque
Stabilizer bar nut
(a): 50 – 150 N·m (5.0 – 15.0 kg-m, 36.5 – 108.0 lb-ft)

- Install new split pins (2) as shown.
- Tighten wheel bolts to specified torque.

Tightening torque
Wheel bolt: 95 N·m (9.5 kg-m, 69.0 lb-ft)

Wheel Hub and Steering Knuckle Removal and Installation

Installation

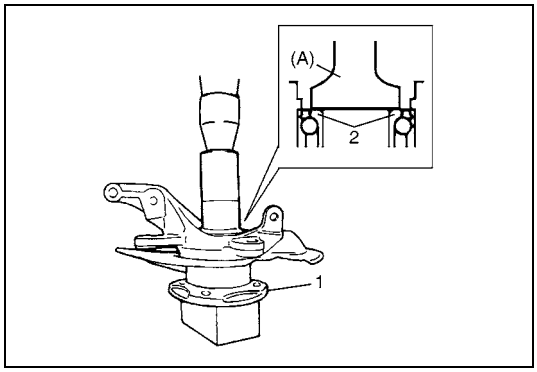

1) Using special tool and hydraulic press, press-fit wheel hub (1) into wheel bearing (2) (Face grooved rubber seal side to wheel hub).

Special tool
(A): 09913-75810

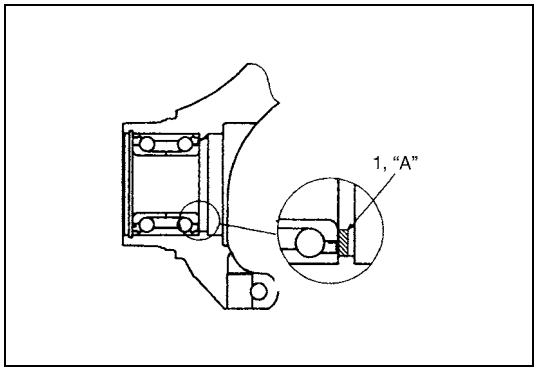

2) Apply grease lightly to contact part (1) of wheel bearing and drive shaft.

"A": Grease 99000-25050

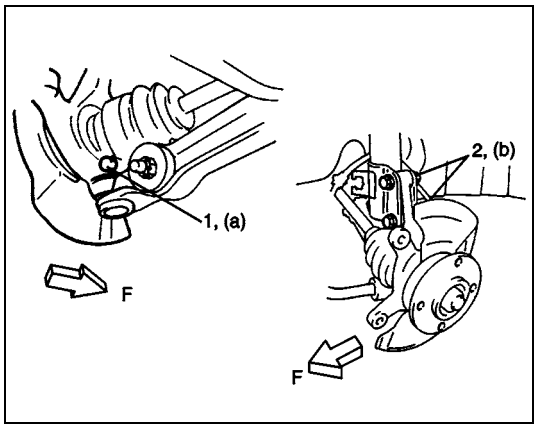

3) Install ball joint bolt (1) from the direction as shown.
4) Tighten suspension arm ball joint bolt (1) to specified torque.

Tightening torque
Suspension arm ball joint bolt
(a): 60 N·m (6.0 kg-m, 43.5 lb-ft)

5) Tighten strut bracket nuts (2) to specified torque.

Tightening torque
Strut bracket nut (b): 115 N·m (11.5 kg-m, 83.0 lb-ft)

F: Forward

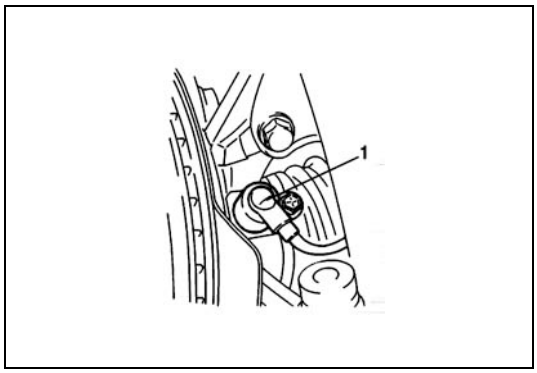

6) Install wheel speed sensor (1) (if equipped with ABS).

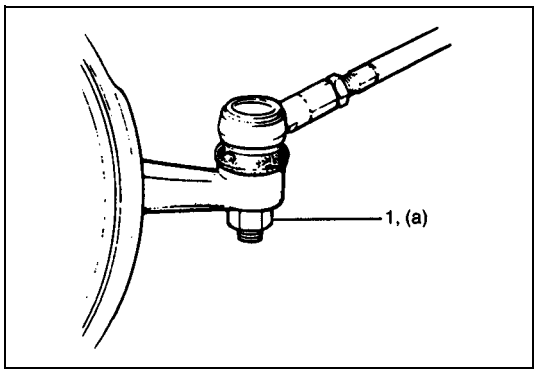

7) Connect tie rod end to steering knuckle, install new tie rod end nut and tighten nut (1) to specified torque.

Tightening torque
The rod end nut (a): 40 N·m (4.0 kg-m, 29.0 lb-ft)

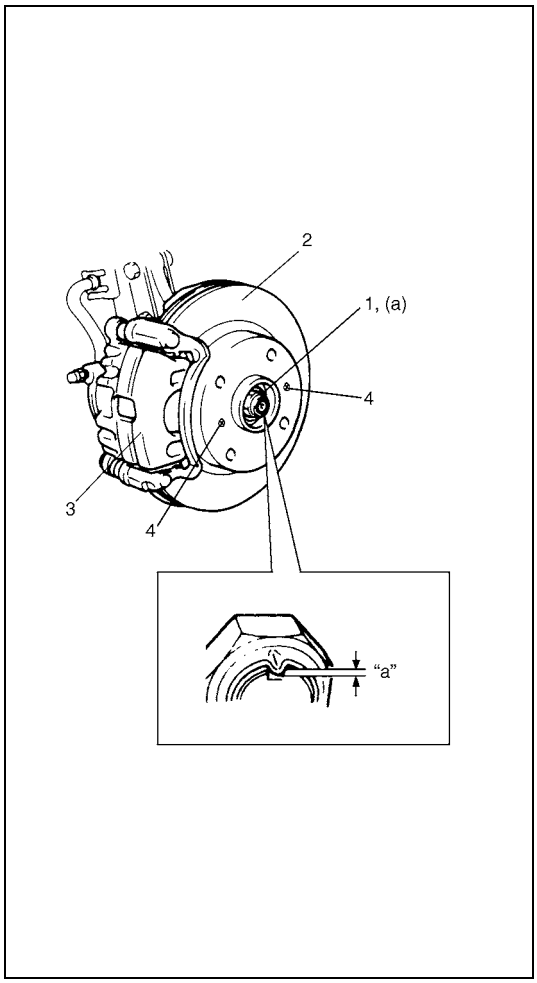

8) Install brake disc (2) and brake caliper (3).
9) Tighten brake disc screws (4) and brake caliper bolt to specified torque.

Tightening torque
Brake disc screw: 9 N·m (0.9 kg-m, 6.5 lb-ft)
Brake caliper bolt: 95 N·m (9.5 kg-m, 69.0 lb-ft)

10) Depress foot brake pedal and hold it there.
Tighten new drive shaft nut (1) to specified torque.

Tightening torque
Drive shaft nut (a): 175 N·m (17.5 kg-m, 127.0 lb-ft)

CAUTION:
Never reuse drive shaft nut (1).

11) Caulk drive shaft nut (1) as shown.

Caulking specification "a": 0.5 mm (0.02 in.) or more

CAUTION:
Be careful while caulking nut so that no crack will occur in caulked part of nut. Cracked nut must be replaced with new one.

12) Tightening wheel bolts to specified torque.

Tightening torque
Wheel bolt: 95 N·m (9.5 kg-m, 69.0 lb-ft)

Tightening Torque Specifications

Fastening part	Tightening torque		
	N•m	kg-m	lb-ft
Brake caliper bolt	95	9.5	69.0
Brake disc screw	9	0.9	6.5
Control arm bolt	60	6.0	43.5
Control arm member bolt	60	6.0	43.5
Drive shaft nut	175	17.5	127.0
Stabilizer bar mounting bracket bolt	45	4.5	32.5
Stabilizer bar nut	50 – 150	5.0 – 15.0	36.5 – 108.0
Strut bracket nut	115	11.5	83.0
Strut nut	50	5.0	36.5
Strut support nut	23	2.3	17.0
Suspension arm ball joint bolt	60	6.0	43.5
The rod end nut	40	4.0	29.0
Control arm crossmember bolt	60	6.0	43.5
Wheel bolt	95	9.5	69.0

SECTION 3E

REAR SUSPENSION

NOTE:

- **All suspension fasteners are an important attaching part in that it could affect the performance of vital parts and systems, and/or could result in major repair expense. They must be replaced with one of the same part number or with an equivalent part if replacement becomes necessary. Do not use a replacement part of lesser quality or substitute design. Torque values must be used as specified during reassembly to assure proper retention of this part.**
- **Never attempt to heat, quench or straighten any suspension part. Replace it with a new part, or damage to the part may result.**
- **For the items with asterisk (*) in the "CONTENTS" below, refer to the same section of the Service Manual mentioned in "Foreword" of this manual.**

CONTENTS

General Description 3E-2
Rear Suspension Component Locator ..... *
Rear Suspension Construction 3E-2
Diagnosis 3E-4
Rear Shock Absorber Check ..... *
Trailing Arm, Lateral Rod, Rear Axle, Rear Axle (Housing) and Coil Spring Check ..... *
Bump Stopper / spring Upper Seat Check ..... *
Rear Suspension Fasteners ..... *
Wheel Disc, Nut and Bearing Check 3E-4
On-vehicle Service 3E-5
Lateral Rod Removal and Installation ..... *
Rear Shock Absorber Removal and Installation ..... *
Coil Spring Removal and Installation 3E-5
Bump Stopper Removal and Installation 3E-6
Spring Upper Seat Removal and Installation ..... *
Trailing Arm Removal and Installation 3E-6
Rear Axle Removal and Installation (for 2WD Model) 3E-8
Wheel Bearing Removal and Installation (for 2WD Model) ..... *
Rear Axle Shaft and Wheel Bearing Removal and Installation (for 4WD Model) ..... *
Rear Axle Shaft Oil Seal Removal and Installation (for 4WD Model) ..... *
Rear Axle Housing Removal and Installation (for 4WD Model) 3E-11
Tightening Torque Specifications 3E-15
Required Service Material ..... *
Special Tool ..... *

General Description

Rear Suspension Construction

2WD model

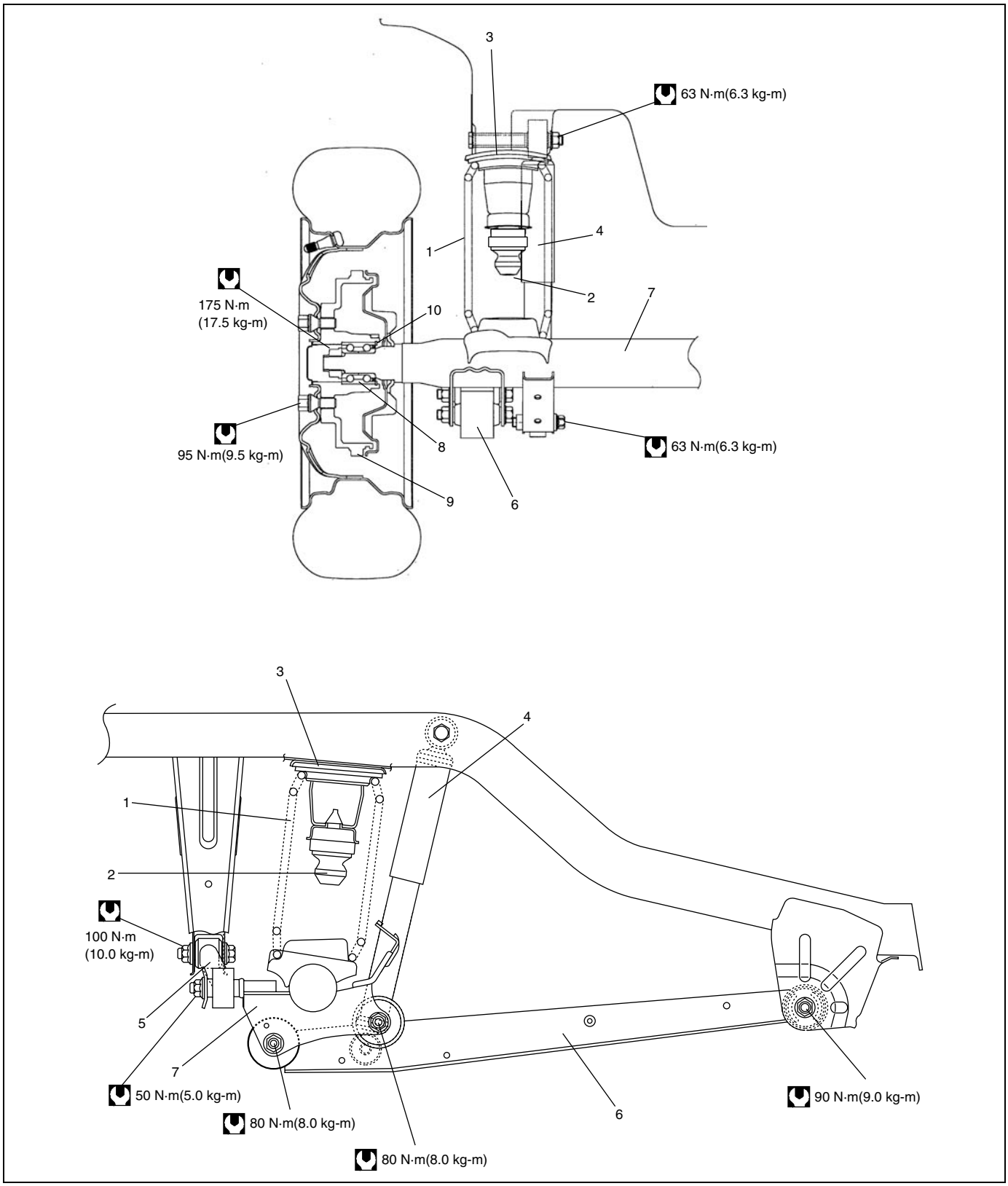

1. Rear coil spring	4. Rear shock absorber	7. Rear axle	10. Circlip
2. Rear bump stopper	5. Lateral rod	8. Wheel bearing	Tightening torque
3. Rear spring upper seat	6. Trailing arm	9. Brake drum	

4WD model

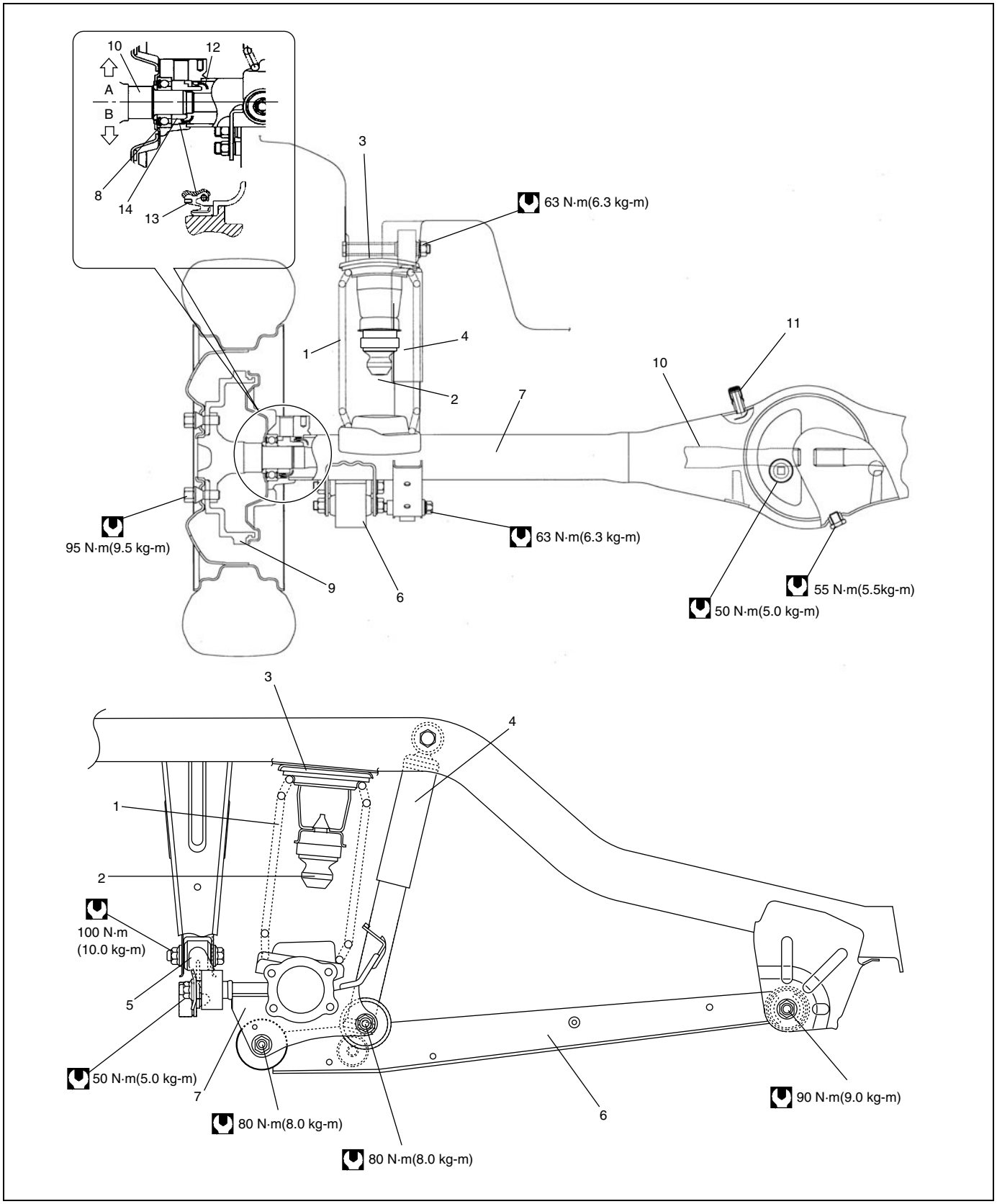

A: With ABS	4. Rear shock absorber	9. Brake drum	14. Wheel bearing retainer ring or rear wheel sensor ring (if equipped with ABS)
B: Without ABS	5. Lateral rod	10. Rear axle shaft	Tightening torque
1. Rear coil spring	6. Trailing arm	11. Breather cap	
2. Rear bump stopper	7. Rear axle housing	12. Oil seal protector	
3. Rear spring upper seat	8. Wheel bearing	13. Oil seal	

Diagnosis

Wheel Disc, Nut and Bearing Check

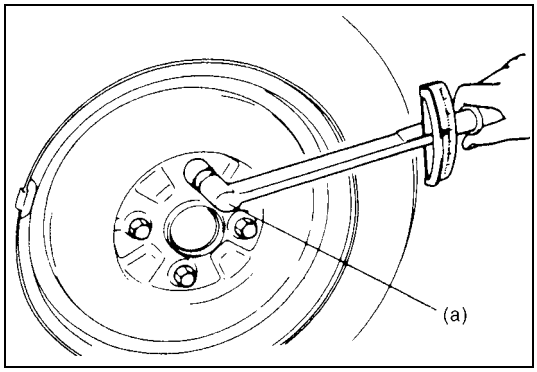

- Inspect each wheel disc for dents, distortion and cracks. A disc in badly damaged condition must be replaced.
- Check wheel bolts for tightness and, as necessary, retighten to specification.

Tightening torque
Wheel bolt (a): 95 N·m (9.5 kg-m, 69.0 lb-ft)

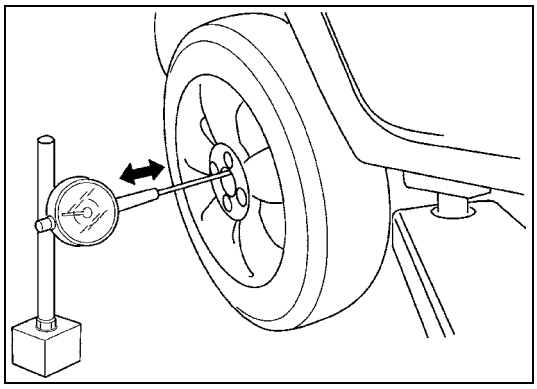

- Check wheel bearings for wear. When measuring thrust play, apply a dial gauge to axle shaft center.
  When measurement exceeds limit, replace bearing.

Thrust play limit
"a": 0.1 mm (0.004 in.)

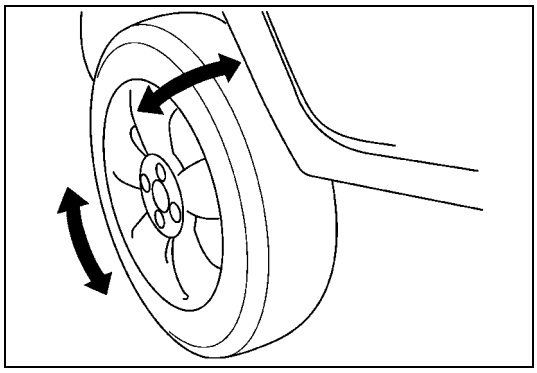

- By rotating wheel actually, check wheel bearing for noise and smooth rotation. If it is defective, replace bearing.

On-vehicle Service

Coil Spring Removal and Installation

Installation

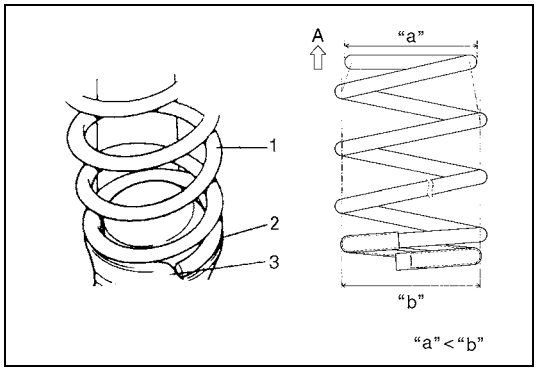

1) Install coil spring (1) on spring seat (2) of rear axle (or axle housing) and mate spring open end with stepped part (3) of spring lower seat and raise rear axle (or axle housing).

A :	Upper side
"a"	Small
"b"	Large

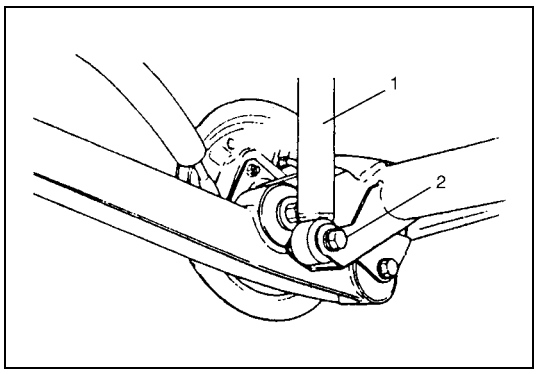

2) Install shock absorber (1) lower side to rear axle (or axle housing).
   Tighten shock absorber lower bolt (2) temporarily by hand at this step.

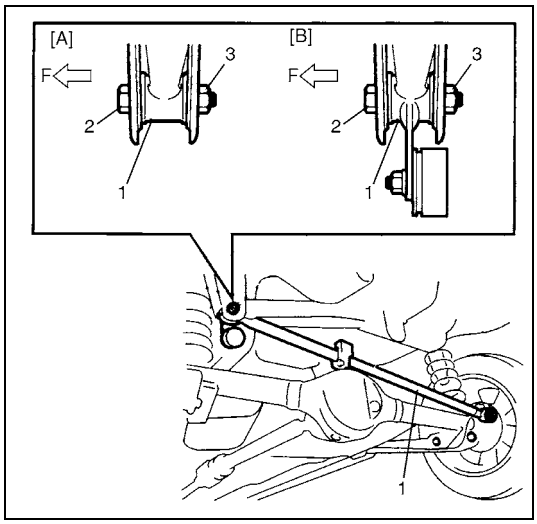

3) Install lateral rod (1) to vehicle body, refer to the figure for proper installing direction of bolt (2).
   Tighten nut (3) temporarily by hand at this step.
4) Remove floor jack from rear axle (or axle housing).

[A]:	2WD model
[B]:	4WD model
F:	Forward

5) Install brake flexible hose E-ring.
6) Install LSPV spring to rear axle. Tighten LSPV adjust nut temporarily at this step (if equipped with LSPV).

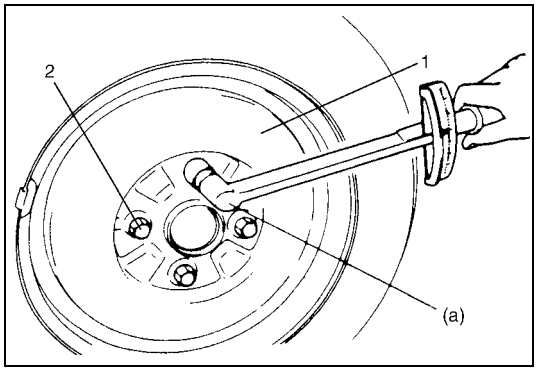

7) Install wheel (1) and tighten wheel bolts (2) to specified torque.

Tightening torque
Wheel bolt (a): 95 N·m (9.5 kg-m, 69.0 lb-ft)

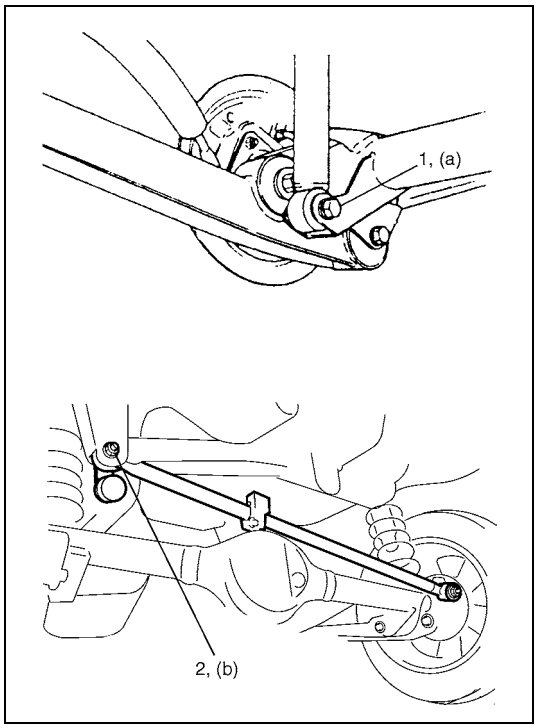

8) Lower hoist and vehicle in non-loaded condition, tighten absorber lower bolt (1) and lateral rod body side nut (2) to specified torque.

Tightening torque
Rear shock absorber lower bolt
(a): 63 N·m (6.3 kg-m, 45.5 lb-ft)
Lateral rod body side nut
(b): 100 N·m (10.0 kg-m, 72.5 lb-ft)

9) If equipped with LSPV, check and adjust LSPV spring referring to “LSPV (Load Sensing Proportioning Valve) Inspection and Adjustment” in Section 5A and “Brake Fluid Pressure Test (if equipped with LSPV)” in Section 5.

Bump Stopper Removal and Installation

Installation

1) Install bumper stopper.

NOTE:
Before installing bushing, apply soap water on it.

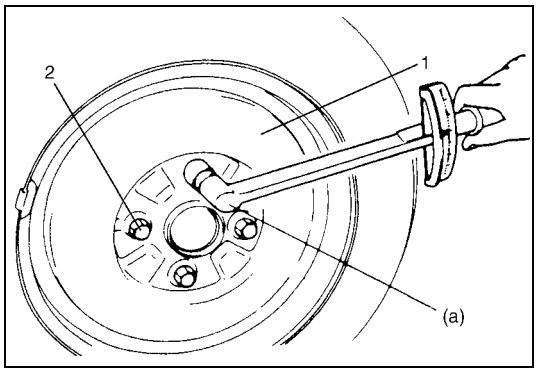

2) Install wheel (1) and tighten wheel bolts (2) to specified torque.

Tightening torque
Wheel bolt (a): 95 N·m (9.5 kg-m, 69.0 lb-ft)

Trailing Arm Removal and Installation

Installation

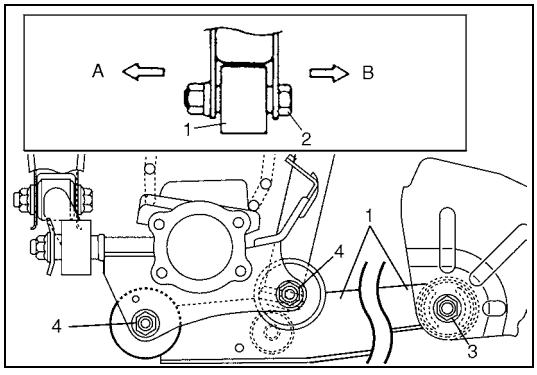

1) Install trailing arm (1) to vehicle body and rear axle (or axle housing) referring to figure for proper installing direction of bolts (2).
Tighten front nut (3) and rear nuts (4) temporarily by hand at this step.

A :	Vehicle out side
B :	Vehicle center side

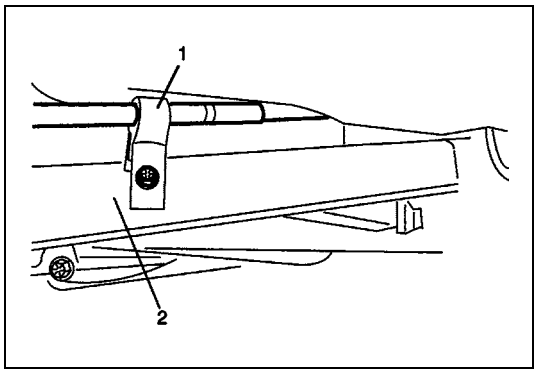

2) Install parking brake cable clamp (1) to trailing arm (2).

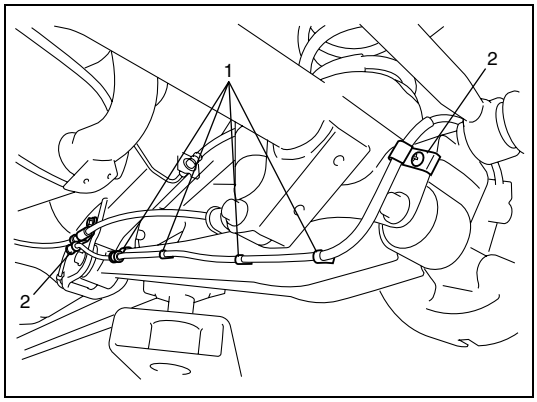

3) Clamp wheel speed sensor lead wire clamps (1) and (2) securely (if equipped with ABS).

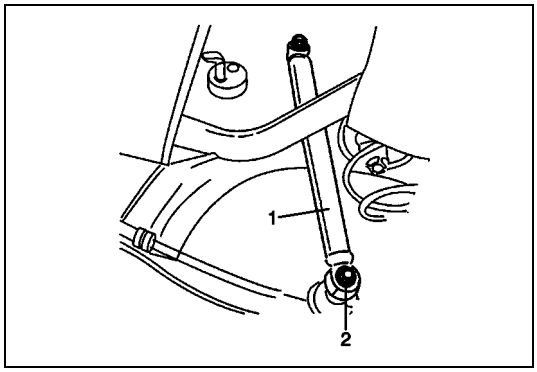

4) Install shock absorber (1) lower side to rear axle (or axle housing).
   Tighten shock absorber lower bolt (2) temporarily by hand at this step.

5) Remove floor jack from rear axle (or axle housing).
6) Install wheel and tighten wheel bolts to specified torque.

Tightening torque
Wheel bolt: 95 N·m (9.5 kg-m, 69.0 lb-ft)

7) Lower hoist.

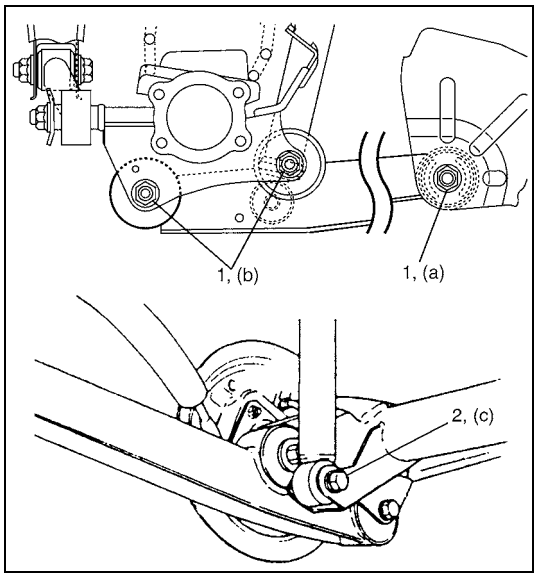

8) Tighten front and rear trailing arm nuts (1), shock absorber lower bolts (2) and lateral rod right side nut (3) to specified torque.

NOTE:

When tightening these nuts, be sure that vehicle is off hoist and in no-loaded condition.

Tightening torque
Front trailing arm nut (a): 90 N·m (9.0 kg-m, 65.0 lb-ft)
Rear trailing arm nut (b): 80 N·m (8.0 kg-m, 58.0 lb-ft)
Rear shock absorber lower bolt
(c): 63 N·m (6.3 kg-m, 45.5 lb-ft)

Rear Axle Removal and Installation (for 2WD Model)

Installation

Install removed parts in reverse order of removal, noting the following points.

1) Place rear axle on floor jack. Then install lateral rod to rear axle and tighten nut temporarily by hand.

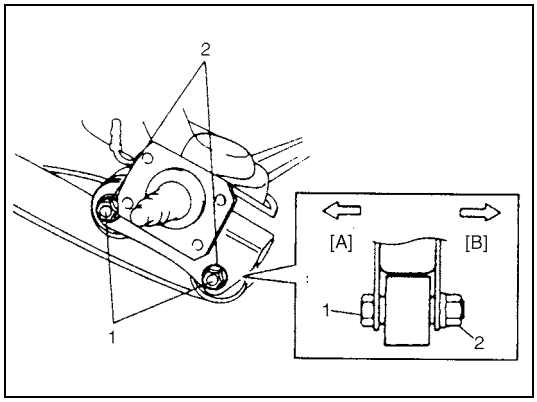

2) Install trailing arm rear bolts (1) (right & left) in proper direction as shown in figure. Then tighten nuts (2) temporarily by hand.

[A]: Vehicle center side
[B]: Vehicle outside

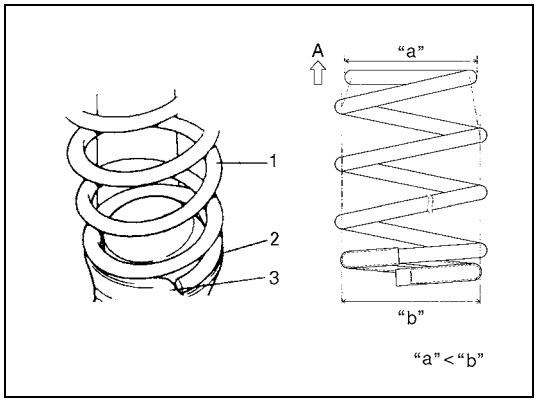

3) Install coil springs (1) (right & left) on spring seat (2) of rear axle as shown in figure and then raise rear axle.

NOTE:

When seating coil spring (1), mate spring end with stepped part (3) of rear axle spring seat as shown.

A: Upper side
"a": Small
"b": Large

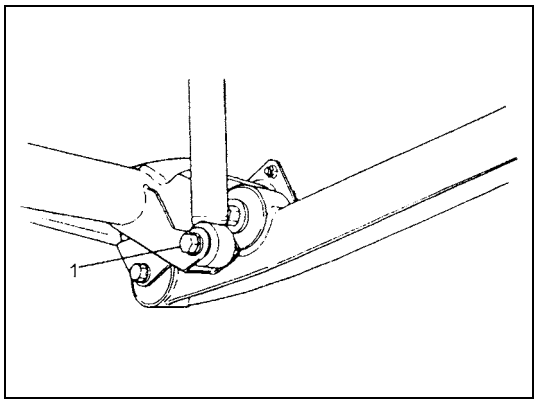

4) Tighten shock absorber lower bolts (1) (right & left) temporarily by hand.
5) Remove floor jack from rear axle.

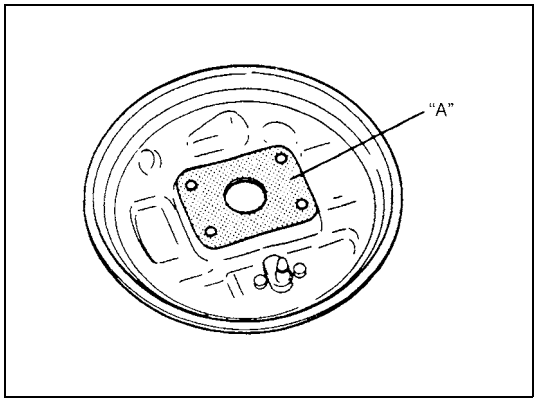

6) Clean mating surface of rear axle (right & left) with brake back plate and apply water tight sealant as shown in figure.
"A": Sealant 99000-31090

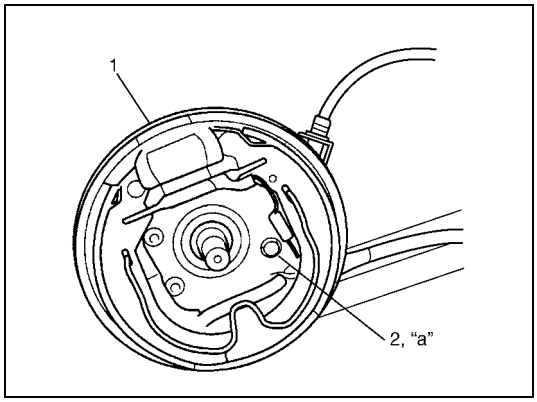

7) Install brake back plates (1) and tighten back plate bolts (2) to specified torque.
Tightening torque
Brake back plate bolt (a): 23 N·m (2.3 kg-m, 17.0 lb-ft)

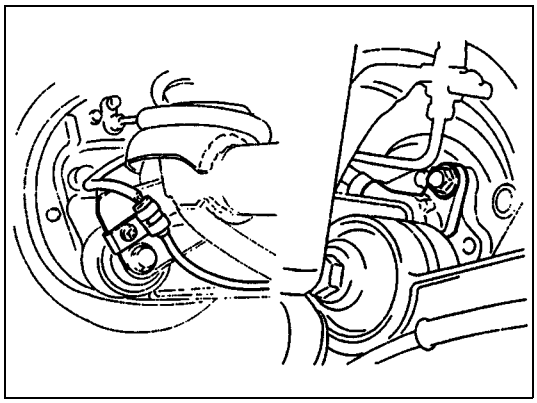

8) Connect wheel speed sensor and lead wire clamps (right & left) (if equipped with ABS).

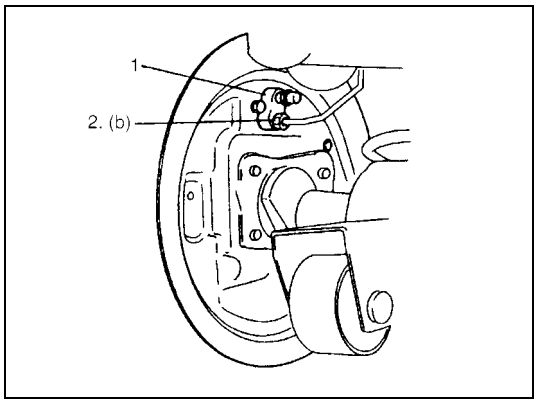

9) Connect brake pipes to wheel cylinders (1) (right & left) and tighten brake pipe flare nuts (2) to specified torque.
Tightening torque
Brake pipe flare nut (b): 16 N·m (1.6 kg-m, 11.5 lb-ft)

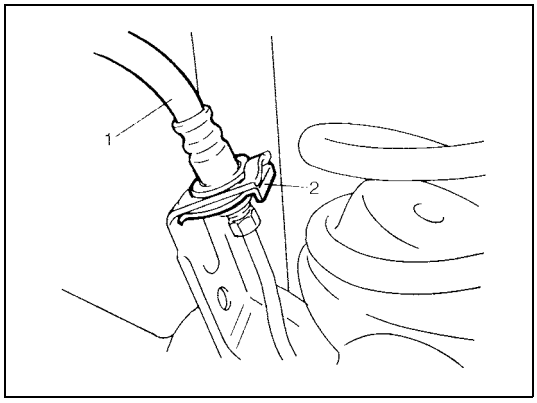

10) Connect brake flexible hoses (1) (right & left) to bracket on rear axle and secure it with E-rings (2) (right & left).

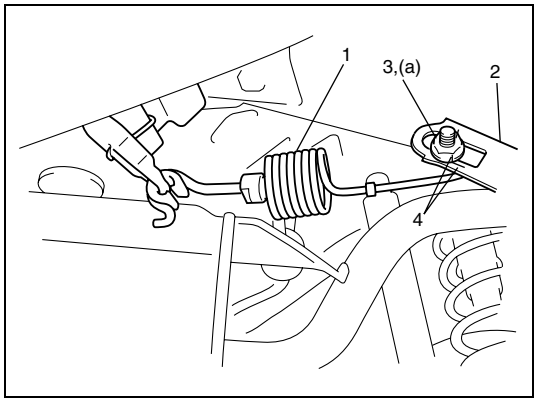

11) Install LSPV spring end nut (3) and spring (1) to rear axle bracket (2) (if equipped).

NOTE:

When installing LSPV spring end nut (3) to bracket (2), make sure to align match marks (4) made during removal.

Tightening torque
LSPV spring end nut (a): 20 N·m (2.0 kg-m, 14.5 lb-ft)

12) Install brake drums (right & left). For details, refer to “Brake Drum Removal and Installation (for 2WD Model)” in Section 5C.
13) Fill reservoir with brake fluid and bleed brake system. (For Bleeding Operation, see Section 5.)

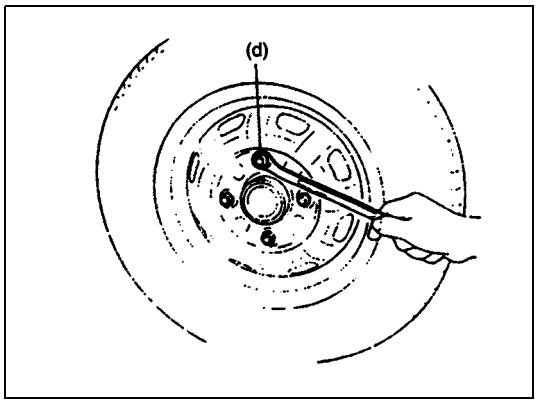

14) Install wheel and tighten wheel bolts to specified torque.
Tightening torque
Wheel bolt (d): 95 N·m (9.5 kg-m, 69.0 lb-ft)

15) Upon completion of all jobs, depress brake pedal with about 300 N (30 kg, 66 lbs) load three to five times so as to obtain proper drum-to-shoe clearance.
    Adjust parking brake cable. (for Adjustment, see Section 5.)
16) Lower hoist and bounce vehicle up and down several times to stabilize suspension.

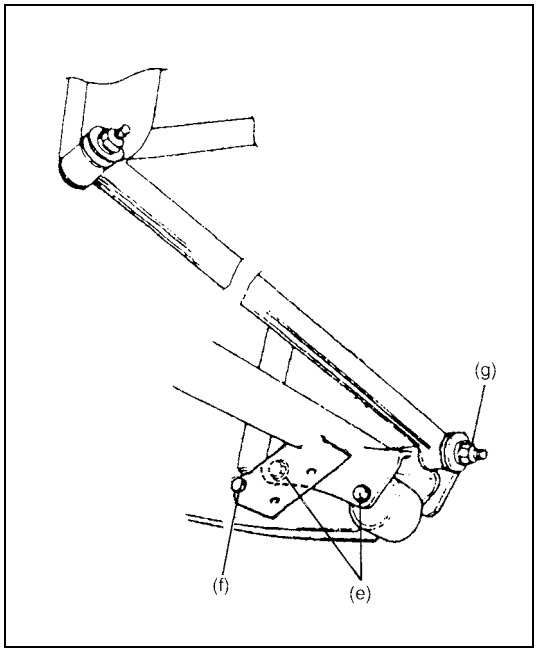

17) Tighten right and left trailing arm rear nuts, shock absorber lower bolts and lateral rod rear axle side nut to specified torque.

NOTE:

When tightening these nuts and bolts, be sure that vehicle is off hoist and in non loaded condition.

Tightening torque
Rear trailing arm nut
(e): 80 N·m (8.0 kg-m, 58.0 lb-ft)
Rear shock absorber lower bolt
(f): 63 N·m (6.3 kg-m, 45.5 lb-ft)
Lateral rod axle housing side nut
(g): 50 N·m (5.0 kg-m, 36.5 lb-ft)

18) Check to ensure that brake drum is free from dragging and proper braking is obtained.
19) Perform brake test (foot brake and parking brake).
20) If equipped with LSPV, check and adjust LSPV spring referring to “LSPV (Load Sensing Proportioning Valve) Inspection and Adjustment” in Section 5A and perform “Brake Fluid Pressure test” in Section 5.
21) Check each installed part for oil leakage.

Rear Axle Housing Removal and Installation (for 4WD Model)

Installation

Install removed parts in reverse order of removal, noting the following.

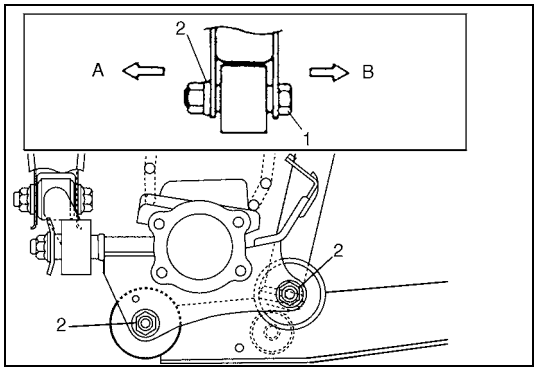

1) Place rear axle housing on floor jack. Then install rear trailing arm bolts (1) (right & left) in proper direction as shown. Then tighten nuts (2) temporarily by hand.

A :	Vehicle out side
B :	Vehicle center side

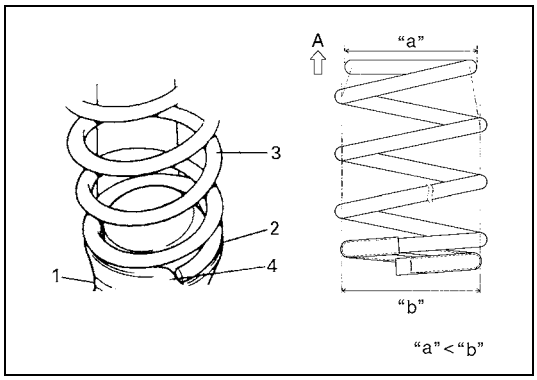

2) Install coil springs (3) (right & left) on spring seat (2) of axle housing (1) and raise axle housing.

NOTE:

Upper and lower diameters of coil spring are different. Bring lager diameter end at bottom and set its open end in place on spring seat.

4. Stepped part
A : Upper side

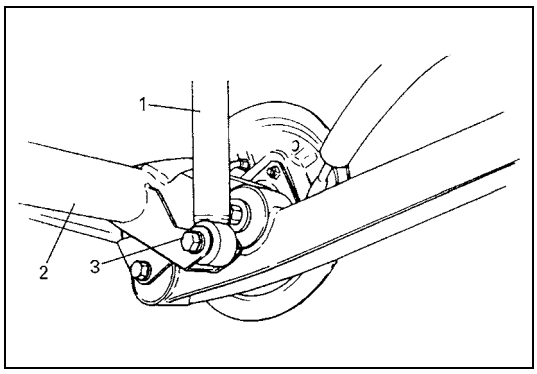

3) Install shock absorber (1) (right & left) to rear axle housing (2) and install bolts in proper direction as shown. Then tighten absorber lower bolts (3) (right & left) temporarily by hand at this step.

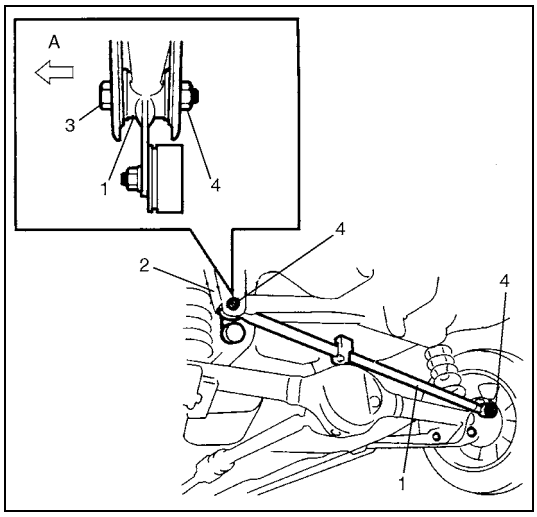

4) Install lateral rod (1) and install bolt (3) in proper direction as shown. Then tighten nuts (4) temporarily by hand.

2. Vehicle body
A : Forward

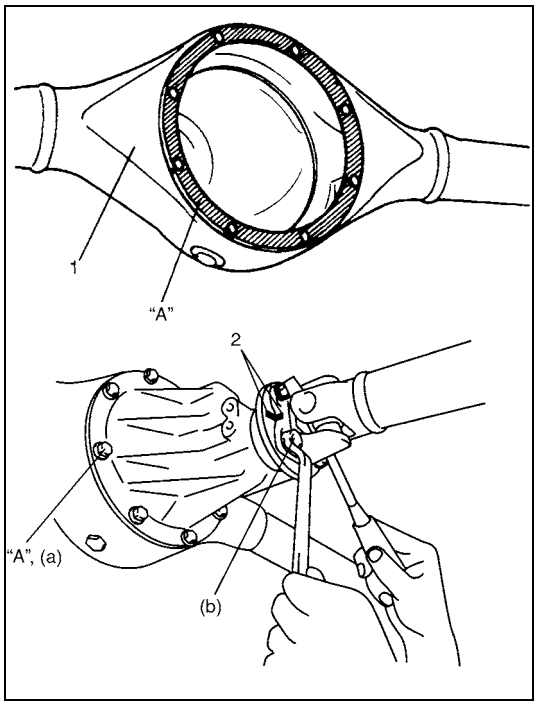

5) Clean mating surfaces of axle housing (1) and differential carrier and apply sealant to housing side.

"A": Sealant 99000-31110

6) Apply sealant to thread part of carrier bolts and tighten carrier bolts to specified torque.

"A": Sealant 99000-31110

Tightening torque
Rear differential carrier bolt
(a): 23 N·m (2.3 kg-m, 17.0 lb-ft)

7) Install propeller shaft to joint flange aligning match marks (2) and tighten flange bolts to specified torque.

Tightening torque
Companion flange bolt (b): 23 N·m (2.3 kg-m, 17.0 lb-ft)

8) Remove floor jack from axle housing.

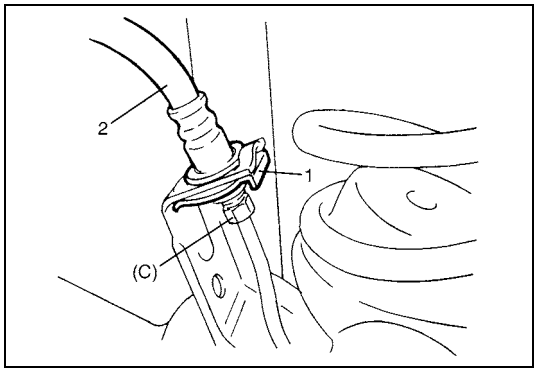

9) Connect brake flexible hoses (2) (right & left) to bracket on axle housing and secure it with E-rings (1).

Tightening torque
Brake pipe flare nut (C): 16 N·m (1.6 kg-m, 11.5 lb-ft)

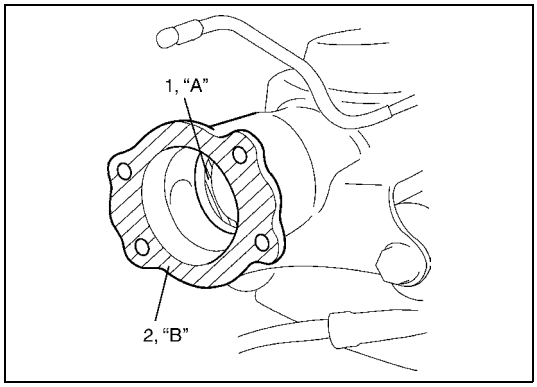

10) Apply grease to rear axle shaft oil seals (1) lip (right & left) as shown.

"A": Grease 99000-25010

11) Clean mating surface (2) (right & left) of rear axle housing and brake back plate and apply sealant as shown in figure.

"B": Sealant 99000-31090

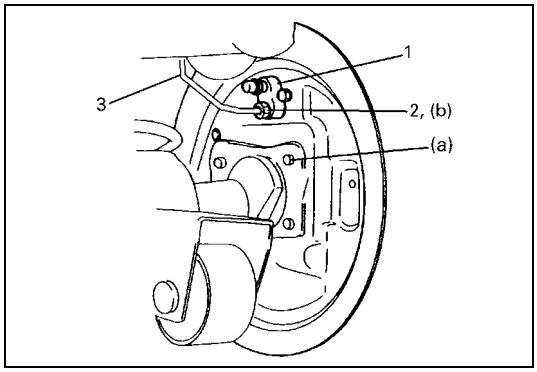

12) Install rear axle shaft (right & left) to rear axle housing.
13) Tighten brake back plate bolts to specified torque.

Tightening torque
Brake back plate bolt (a): 23 N·m (2.3 kg-m, 17.0 lb-ft)

14) Connect brake pipes (3) to wheel cylinders (1) (right & left) and tighten brake pipe flare nuts (2) to specified torque.

Tightening torque
Brake pipe flare nut (b): 16 N·m (1.6 kg-m, 11.5 lb-ft)

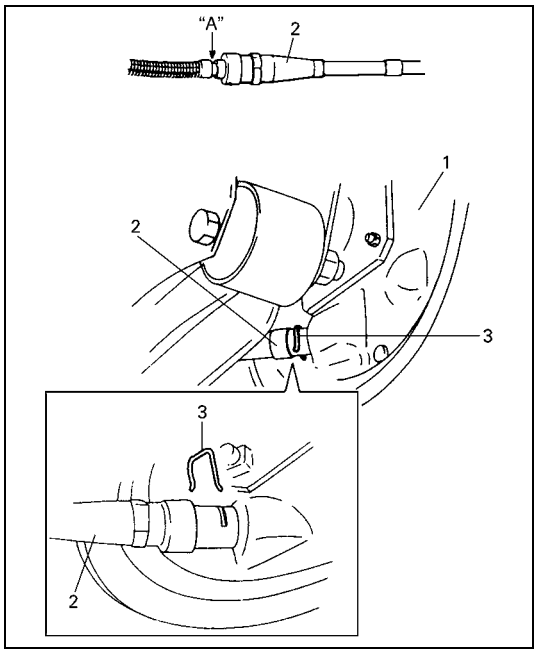

15) Apply water tight sealant where brake back plate (1) and parking brake cable contact.
Connect parking brake cable (2) to brake back plate (right & left) and secure it with clip (3).

"A": Sealant 99000-31090

NOTE:

Check to ensure that clip is in good condition before installing it. If deformed or broken, replace.

16) Install parking brake cable clamps to trailing arm.
17) Install wheel speed sensors (right & left) and clamp wire securely (if equipped with ABS).
18) Install brake shoes (right & left) referring to "Brake Shoe Removal and Installation" in Section 5C.

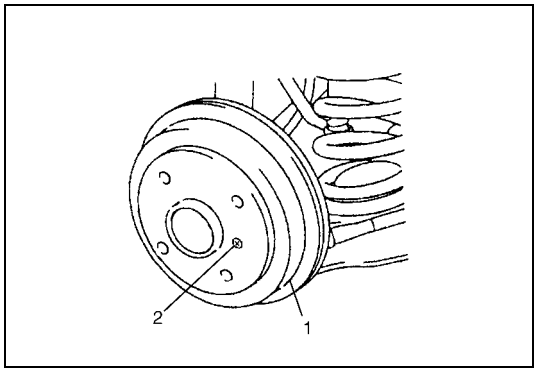

19) Install brake drums (1) (right & left) after making sure that inside of brake drum and brake shoes are free from dirt and oil. Then tighten brake drum screw (2).
20) Fill reservoir with brake fluid and bleed brake system. (For bleeding operation, refer to "Air Bleeding of Brake System" in Section 5.)
21) Refill differential gear housing with new specified gear oil. Refer to "Oil Change" in Section 7F.

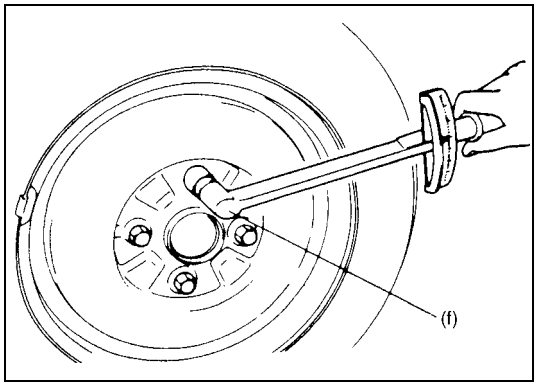

22) Install wheels and tighten wheel bolts to specified torque.

Tightening torque
Wheel bolt (f): 95 N·m (9.5 kg-m, 69.0 lb-ft)

23) Upon completion of all jobs, pull parking brake lever with about 200 N (20 kg, 44 lbs) load three to five times so as to obtain proper drum-to-shoe clearance.
Adjust parking brake cable referring to "Parking Brake Inspection and Adjustment" in Section 5.
24) Lower hoist.

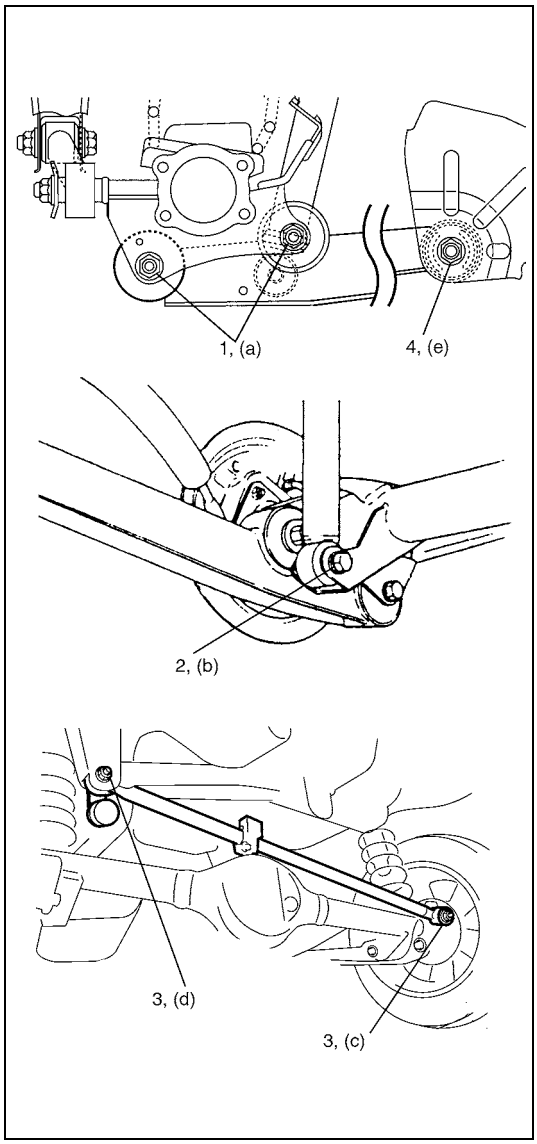

25) Tighten right and left trailing arm nuts (1), (4) and shock absorber lower bolts (2) to specified torque.
Tighten lateral rod nuts (3) to specified torque.

NOTE:

When tightening these bolts and nuts, be sure that vehicle is off hoist and in non loaded condition.

Tightening torque
Rear trailing arm nut
(a): 80 N·m (8.0 kg-m, 58.0 lb-ft)
Rear shock absorber lower bolt
(b): 63 N·m (6.3 kg-m, 45.5 lb-ft)
Lateral rod axle housing side nut
(c): 50 N·m (5.0 kg-m, 36.5 lb-ft)
Lateral rod body side nut
(d): 100 N·m (10.0 kg-m, 72.5 lb-ft)
Front trailing arm nut
(e): 90 N·m (9.0 kg-m, 65.0 lb-ft)

26) Check to ensure that brake drum is free from dragging and proper braking is obtained.
27) Perform brake test (foot brake and parking brake).
28) Check each installed part for oil leakage.

Tightening Torque Specifications

Fastening part	Tightening torque		
	N•m	kg-m	lb-ft
Brake back plate bolt	23	2.3	17.0
Brake pipe flare nut	16	1.6	11.5
Companion flange bolt	23	2.3	17.0
Front trailing arm nut	90	9.0	65.0
Lateral rod axle (housing) side nut	50	5.0	36.5
Lateral rod body side nut	100	10.0	72.5
LSPV spring end nut (2WD Model)	20	2.0	14.5
Rear differential carrier bolt (4WD Model)	23	2.3	17.0
Rear shock absorber lower bolt	63	6.3	45.5
Rear shock absorber upper nut	63	6.3	45.5
Rear trailing arm nut	80	8.0	58.0
Wheel bolt	95	9.5	69.0

SECTION 3F

WHEELS AND TIRES

NOTE:

- **All wheel fasteners are important attaching parts in that they could affect the performance of vital parts and systems, and/or could result in major repair expense. They must be replaced with one of the same part number or with an equivalent part if replacement becomes necessary. Do not use a replacement part of lesser quality or substitute design. Torque values must be used as specified during reassembly to assure proper retention of all parts.**
  There is to be no welding as it may result in extensive damage and weakening of the metal.
- **For the items with asterisk (*) in the "CONTENTS" below, refer to the same section of the Service Manual mentioned in "Foreword" of this manual.**

CONTENTS

General Description ..... *
Tire and Wheel Description ..... *
Replacement Tires ..... *
Replacement Wheel ..... *
How to measure wheel run-out ..... *
Wheel Bolts ..... *
Matched Tires and Wheels ..... *
Diagnosis ..... *
Diagnosis Table ..... *
Maintenance and Minor Adjustments ..... *
Wheel Maintenance ..... *
Inflation of Tires ..... *
Tire Placard ..... *
Tire Rotation ..... *
On-vehicle Service 3F-2
Wheel Removal and Installation 3F-2
Tire Mounting and Dismounting ..... *
Tire Repair ..... *
Balancing Wheels ..... *
General balance procedures ..... *
Off-vehicle balancing ..... *
On-vehicle balancing ..... *
Tightening Torque Specifications 3F-3

On-vehicle Service

Wheel Removal and Installation

Removal

WARNING:

Do not removal all of the wheel bolts at once, because all the wheels of this vehicle are mounted by the wheel bolts.
Leave a bolt at least not to drop the wheel.
Support the wheel and/or tire and then remove the bolt(s) left with the wheel.

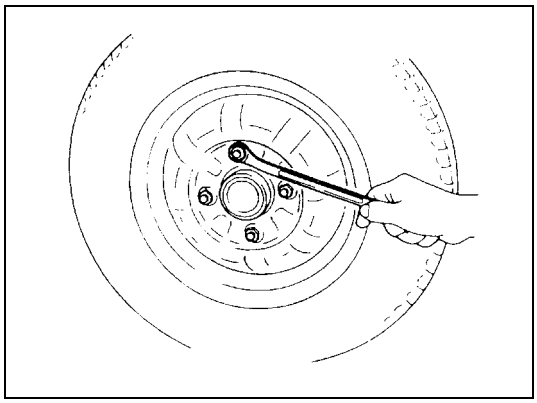

1) Loosen wheel bolts by approximately 180 ° (half a rotation).
2) Hoist vehicle.
3) Make sure that the Vehicle will not fall off by trying to more vehicle body in both ways.
4) Remove wheel bolts except one.
5) Support the wheel and/or tire not to drop the wheel and then remove the bolt left with the wheel.

CAUTION:

Never use heat to loosen tight wheel because application of heat to wheel can shorten life of wheel and damage wheel bearings.

Installation

For installation, reverse removal procedure, noting the flowing. Wheel bolts must be tightened in sequence and to proper torque to avoid bending wheel or brake disc, left figure.

NOTE:

Before installing wheels, remove any build-up of corrosion on wheel mounting surface and brake disc mounting surface by scraping and wire brushing. Installing wheels without good metal-to-metal contact at mounting surfaces can cause wheel bolts to loosen, which can later allow a wheel to come off while vehicle is moving.

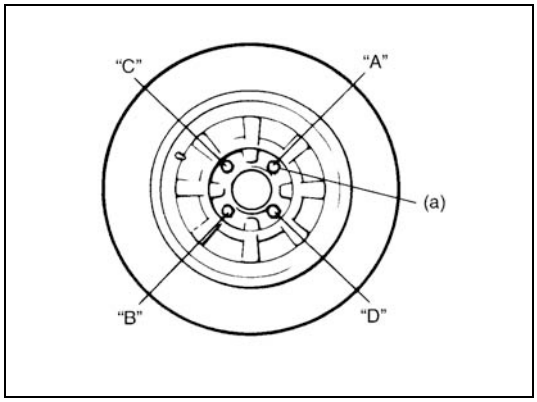

Tightening order
"A" – "B" – "C" – "D":

Tightening torque
Wheel bolt (a): 95 N·m (9.5 kg-m, 69.0 lb-ft)

Tightening Torque Specifications

Fastening part	Tightening torque		
	N•m	kg-m	lb-ft
Wheel bolt	95	9.5	69.0

SECTION 4A

FRONT DRIVE SHAFT

NOTE:

For the items with asterisk (*) in the "CONTENTS" below, refer to the same section of the service manual mentioned in "Foreword" of this manual.

CONTENTS

General Description ..... *
Diagnosis ..... *
On-Vehicle Service **4A-2**
Front Drive Shaft Assembly Construction 4A-2
Front Drive Shaft Assembly Removal and Installation 4A-3
Front Drive Shaft Assembly Inspection ..... *
Front Drive Shaft Components..... 4A-5
Front Drive Shaft Disassembly and Assembly 4A-6
Front Drive Shaft Inspection ..... *
Center Shaft and Center Bearing Support Disassembly and Assembly 4A-15
Tightening Torque Specification **4A-17**
Required Service Material **4A-17**
Special Tools **4A-18**

On-Vehicle Service

Front Drive Shaft Assembly Construction

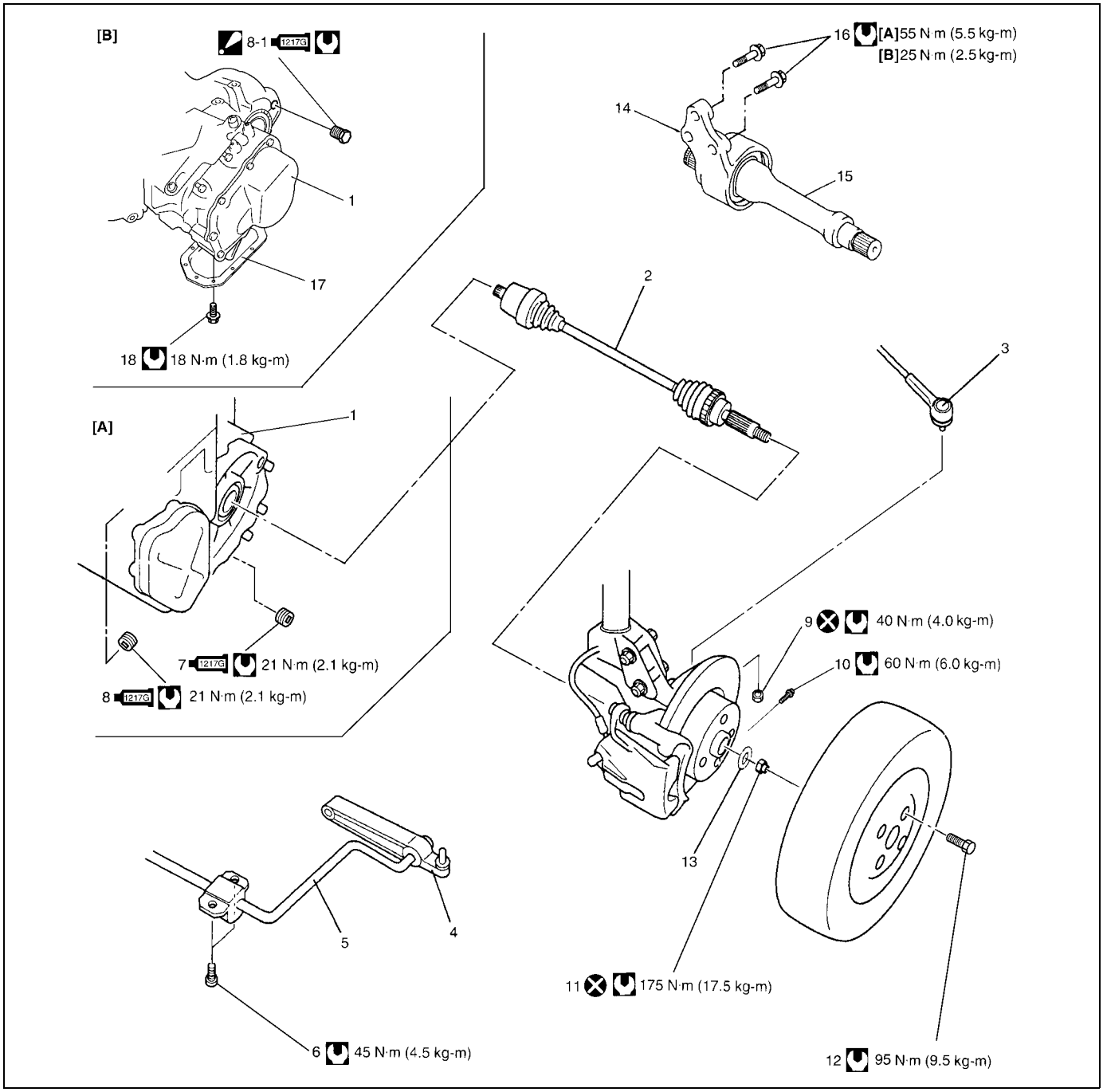

[A] : M15 engine model	7. Oil drain plug : Apply sealant 99000-31260 to plug thread.	14. Center bearing support
[B] : Z13DT engine model	8. Oil filler/level plug : Apply sealant 99000-31260 to plug thread.	15. Center shaft
1. Transaxle	8-1. Oil filler/level plug : Apply sealant 99000-31260 to plug thread. : Tighten the plug 4 N·m (0.4 kg-m), 45° and 135°.	16. Center bearing support bolts
2. Drive shaft assembly	9. Tie-rod end nut	17. Oil pan
3. Tie-rod end	10. Ball stud bolt	18. Oil pan bolt
4. Suspension control arm	11. Drive shaft nut	Do not reuse.
5. Stabilizer	12. Wheel bolt	Tightening torque
6. Stabilizer mount bracket bolt	13. Drive shaft washer	

Front Drive Shaft Assembly Removal and Installation

Removal

CAUTION:
To prevent the breakage of boots, be careful not to damage the boots when removing drive shaft assembly.

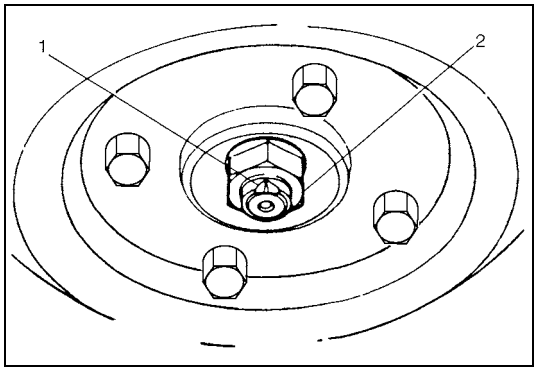

1) Disengage caulking (1) and remove drive shaft nut (2).
2) Loosen wheel bolts.
3) Hoist vehicle.
4) Remove wheel.

5) Drain transaxle oil referring to “Manual Transaxle Oil Change” in Section 7A2 (M/T vehicle with M15 engine), “Fluid change” in Section 7B (A/T vehicle with M15 engine), or “Manual Transaxle Oil Change” in Section 7A3 (vehicle with Z13DT engine), and drain transfer oil (4WD vehicle) referring to “Transfer Oil Change” in Section 7D.
6) Remove tie-rod end referring to “Suspension Control Arm/ Bushing Removal and Installation” in Section 3D.

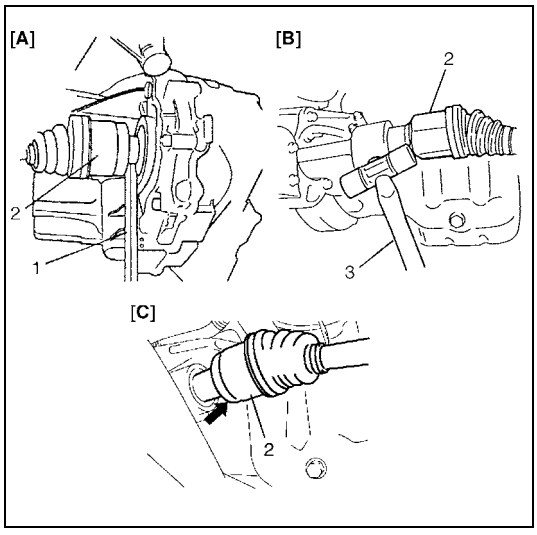

7) Pull out drive shaft joint (2) as follows.
   a) Left side of 2WD vehicle and 4WD vehicle
      Using tire lever (1), pull out drive shaft joint (2) so as to release snap ring fitting of joint spline at differential side.
   b) Right side of 2WD vehicle
      Using plastic hammer (3), drive out drive shaft joint (2) so as to release snap ring fitting of joint spline at center shaft.
   c) Right side of 4WD vehicle
      Using plastic hammer, drive out drive shaft joint (2) so as to release snap ring fitting of joint spline at transfer side.

[A] :	Left side shaft of 2WD vehicle and 4WD vehicle
[B] :	Right side shaft of 2WD vehicle
[C] :	Right side shaft of 4WD vehicle

8) Remove two stabilizer mount brackets from vehicle body referring to “Wheel Hub and Steering Knuckle Removal and Installation” in Section 3D.

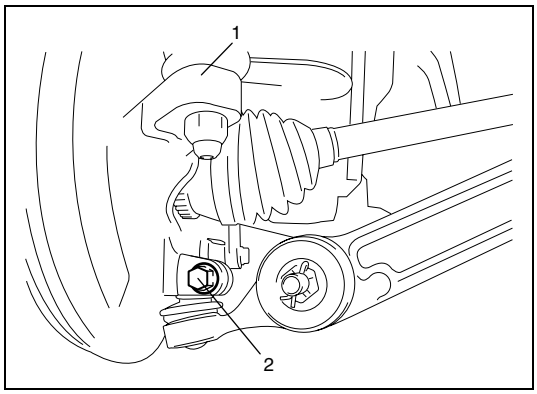

9) Disconnect front suspension control arm ball joint stud from steering knuckle (1) by pushing down stabilizer bar after removing ball stud bolt (2).
10) Remove drive shaft assembly.

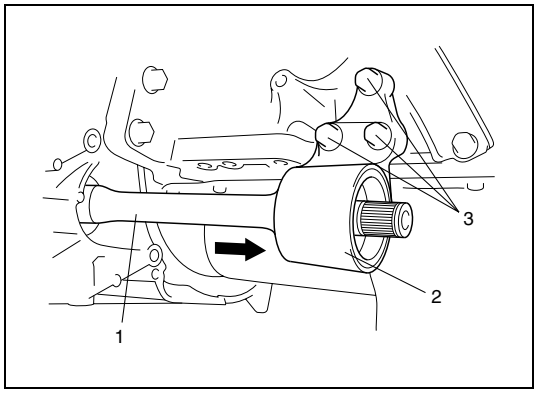

11) For vehicle with center shaft, remove center bearing support bolts (3) and remove center bearing support (2) with center shaft (1) from differential side gear.

Installation

CAUTION:
- **Be careful not to damage oil seals and boots when installing drive shaft assembly.**
- **Do not hit joint with hammer. Inserting joint only by hands is allowed.**
- **Make sure that differential side joint is inserted fully and its snap ring is seated as it was.**

Install drive shaft assembly by reversing removal procedure noting the following points.
- Install wheel side joint to steering knuckle first, and then differential side joint to transaxle.
- Tighten each bolt and nut to the specified torque referring to “Front Drive Shaft Assembly Construction” in this section.
- Fill transaxle with oil referring to “Manual Transaxle Oil Change” in Section 7A2 (M/T vehicle with M15 engine), “Fluid change” in Section 7B (A/T vehicle with M15 engine), or “Manual Transaxle Oil Change” in Section 7A3 (vehicle with Z13DT engine), and fill transfer with oil (4WD vehicle) referring to “Transfer Oil Change” in Section 7D.
- Check toe setting and adjust as required.

Front Drive Shaft Components

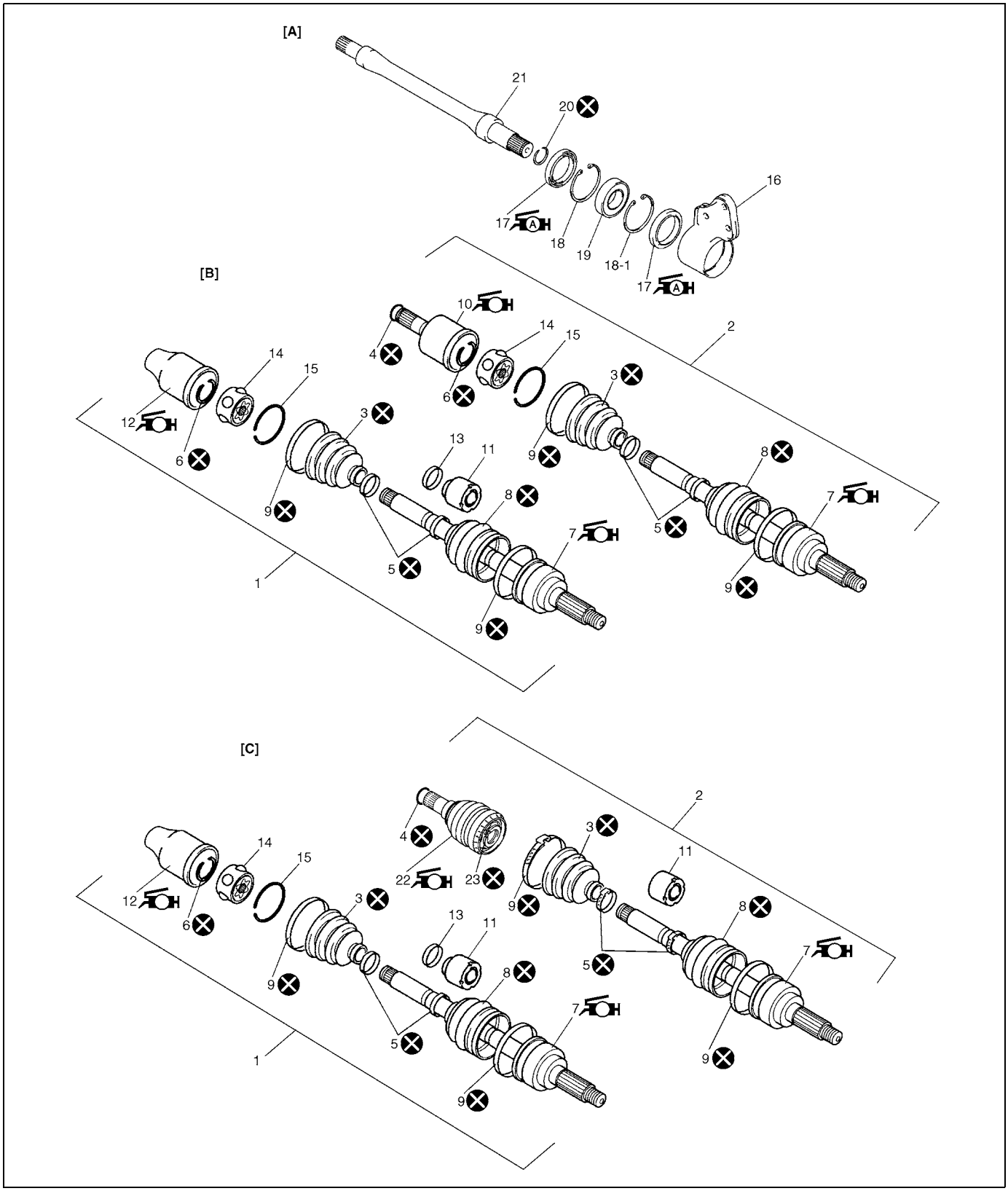

[A] : 2WD vehicle	8. Boot (Wheel side)	18. Circlip
[B] : M15 engine model	9. Boot big band	18-1. Circlip (M15 engine model)
[C] : Z13DT engine model	10. Differential side joint housing (for Double offset joint) : Apply black and grey grease included in spare part.	19. Center shaft support bearing
1. Right side drive shaft assembly	11. Damper (RH)	20. Snap ring
2. Left side drive shaft assembly	12. Differential side joint housing (for Double offset joint) : Apply black and grey grease included in spare part.	21. Center shaft
3. Boot (Differential or transfer side)	13. Damper band	22. Differential side joint (Cross groove joint) : Apply dark brown grease included in spare parts.
4. Circlip	14. Cage (for Double offset joint)	23. Circlip
5. Boot small band	15. Circlip	Do not reuse.
6. Snap ring	16. Center bearing support bracket	
7. Wheel side joint (Constant velocity ball joint) : Apply grease included in spare part. • Black grease (M15 engine model and right side shaft of Z13DT engine model) • Dark brown (Left side shaft of Z13DT engine model)	17. Oil seal : Apply grease 99000-25010 to seal lip.	

Front Drive Shaft Disassembly and Assembly

Disassembly

For M15 engine model and right side shaft of Z13DT engine model

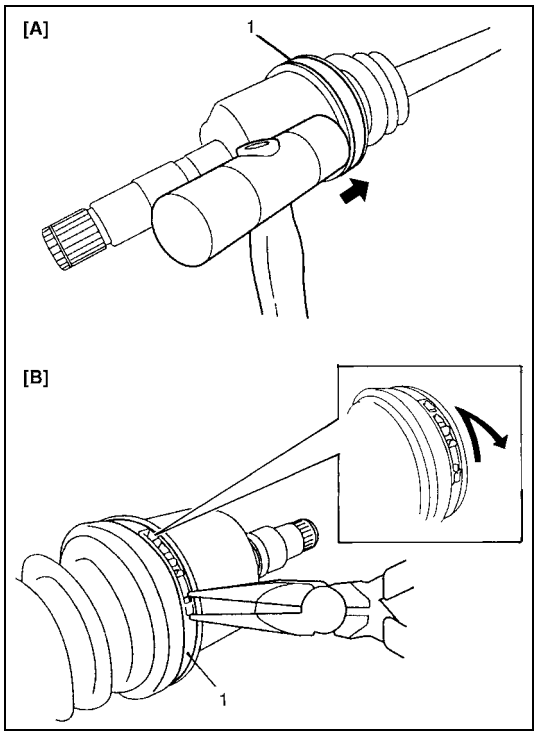

CAUTION:

Disassembly of wheel side joint is not allowed. If any abnormality is found, replace it as assembly.

1) Remove differential side boot big band (1) as follows.
   a) For boot big band without joint
      i) Remove boot big band by tapping boot and band with plastic hammer. If it is hard to remove boot big band, cut it using a nipper or an iron saw with care not to damage DOJ housing.
   b) For boot big band with joint
      i) Draw hooks of boot big band together and remove band.

[A] : For boot big band without joint
[B] : For boot big band with joint

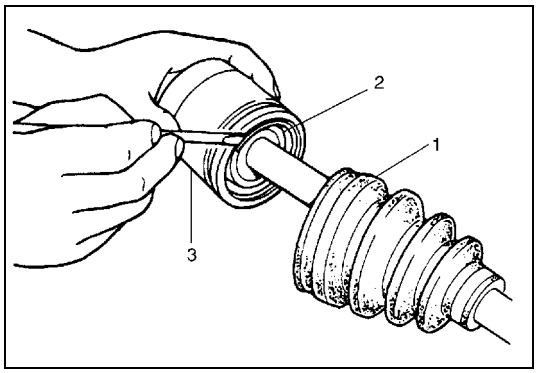

2) Move boot (1) toward the center of shaft and remove circlip (2) from differential side joint housing (3), and then take differential side joint housing from shaft.

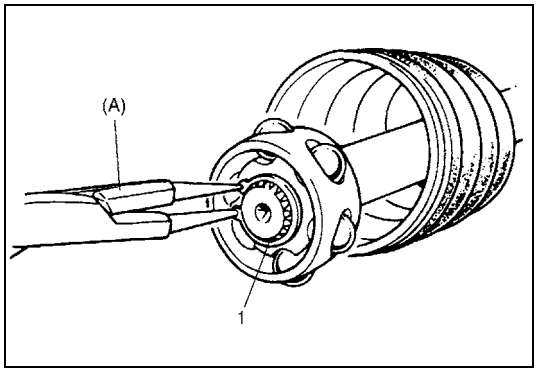

3) Wipe off grease and remove snap ring (1) by using special tool.

Special tool
(A) : 09900-06107

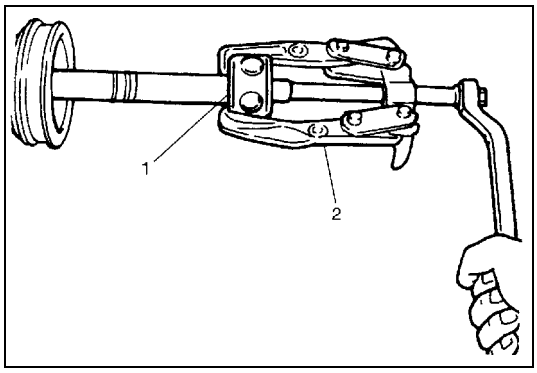

4) Pull out cage (1) by using bearing puller (2).

5) Remove differential side boot small band, and then pull out differential side boot from shaft.
6) Remove damper band, and then pull out damper through shaft.

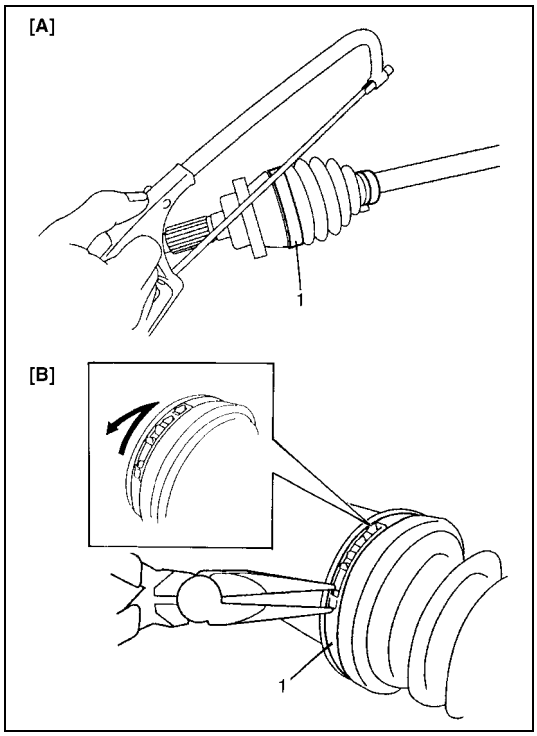

7) Remove wheel side boot big band (1) as follows.
   a) For boot big band without joint
      i) Cut boot big band by using an iron saw or a nipper with care not to damage wheel side joint housing.
   b) For boot big band with joint
      i) Draw hooks of boot big band together and remove band.
8) Remove wheel side small boot band, and then pull out wheel side boot from shaft.

[A] : For boot big band without joint
[B] : For boot big band with joint

For left side shaft of Z13DT engine model

CAUTION:
Disassembly of wheel and differential side joints is not allowed. If any abnormality is found, replace it as assembly.

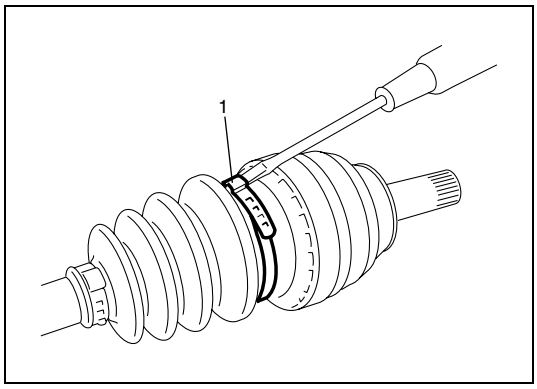

1) Remove differential side boot big band (1) by using flat end rod or the like.

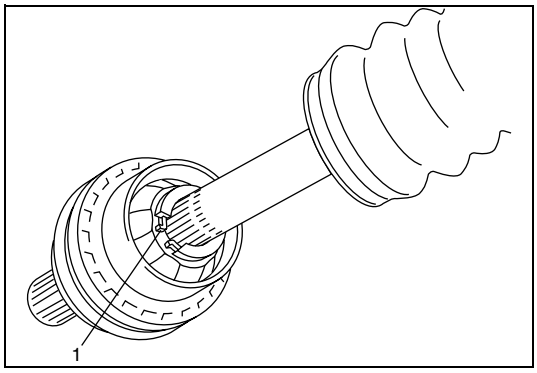

2) Remove differential side joint from shaft as follows.
   a) Gather boot and remove old grease so that circlip (1) is visible.

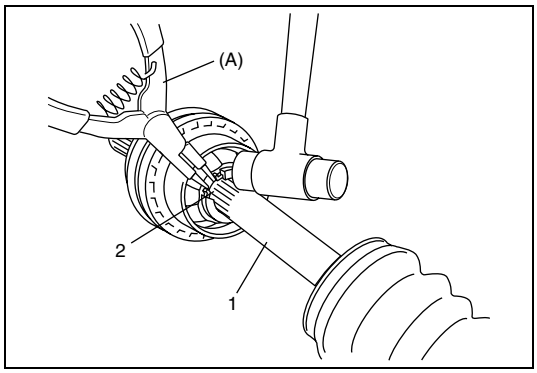

b) Clamp drive shaft in soft jawed vise, and then expand circlip (2) by using special tool and pull out differential side joint from drive shaft (1) by using plastic hammer.

Special tool
(A) : 09900-06107

3) Remove differential side boot small band, and then pull out differential side boot from shaft.
4) Pull out damper through shaft.

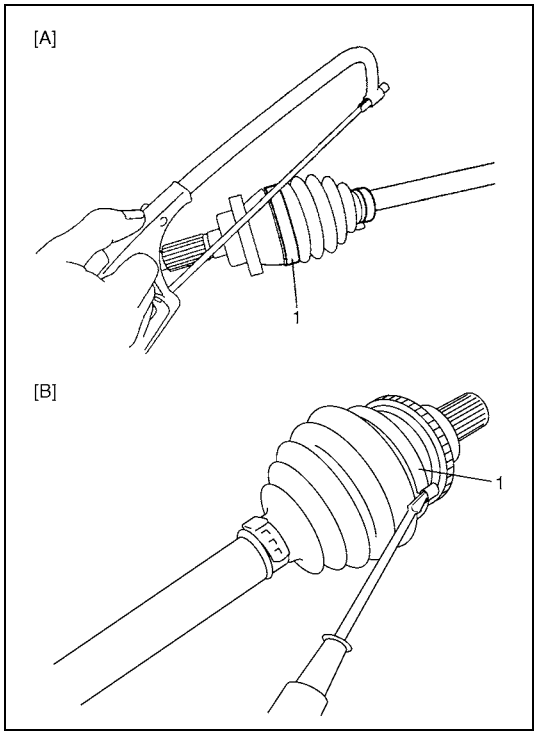

5) Remove wheel side boot big band (1) as follows.
   a) For boot big band without joint
      i) Cut boot big band by using an iron saw or a nipper with care not to damage wheel side joint housing.
   b) For boot big band with joint
      i) Remove boot big band by using flat end rod or the like.
6) Remove wheel side boot small band, and then pull out wheel side boot from shaft.

[A] : For boot big band without joint
[B] : For boot big band with joint

Assembly

For M15 engine model and right side shaft of Z13DT engine model

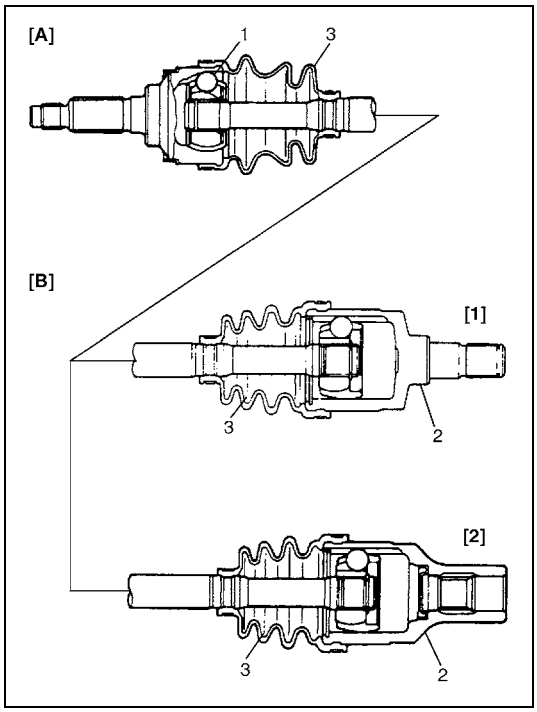

CAUTION:

- **Do not wash boots in degrease, such as gasoline or kerosene, etc. Washing in degrease causes deterioration of boots.**
- **To ensure full performance of joint as designed, be sure to distinguish two types of grease in spare part and apply the specified amount of grease to each joint.**

Judging from abnormality noted before disassembly and what is found though visual check of each component after disassembly, prepare replacement parts and start assembly, and make sure that wheel side joint (1) and differential side joint (2) are washed thoroughly and air dried, and boots (3) are cleaned with cloth if they are to be reused.

[A] :	Wheel side joint
[B] :	Transaxle or transfer side joint
[1] :	Left side shaft
[2] :	Right side shaft

1) Wash each component (except boots). After wash, dry each component completely by blowing air.
2) Clean boots with cloth.
3) Apply the specified amount of grease to the inside of joint housing.

Grease color
For M15 engine model : Black
For right side shaft of Z13DT engine model : Black
Amount
For M15 engine model : 60 – 80 g (2.1 – 2.8 oz)
For right side shaft of Z13DT engine model :
75 – 95 g (2.6 – 3.4 oz)

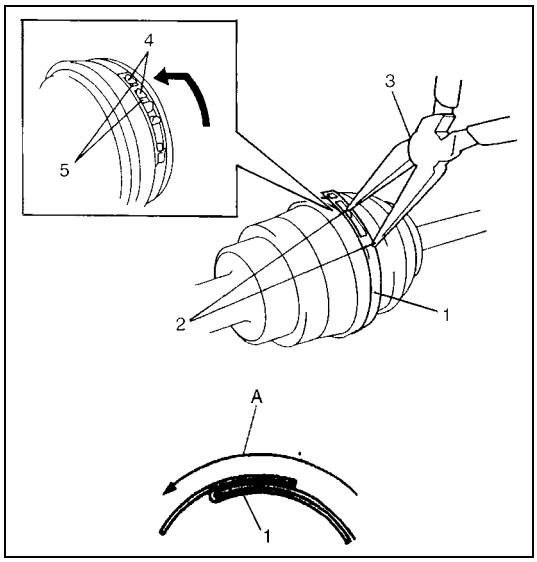

4) Install wheel side boot on shaft, and then fasten boot big band (1) by drawing hooks (2) with plier (3) and engage hooks (4) in slot and window (5).

CAUTION:

- **Place boot band against forward rotation (A).**
- **Do not squeeze or distort boot when fastening it with bands. Distorted boot caused by squeezing air may reduce its durability.**

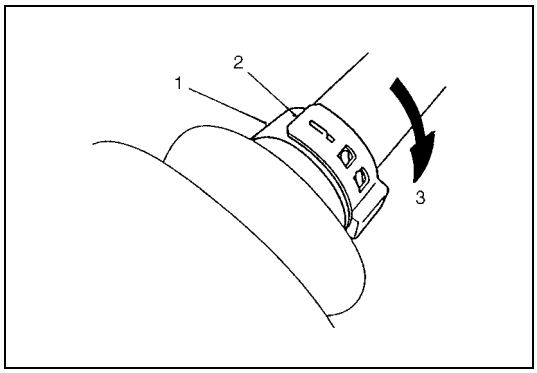

5) Place new wheel side boot small band (1) onto boot putting band outer end (2) against forward rotation (3) as shown in figure.

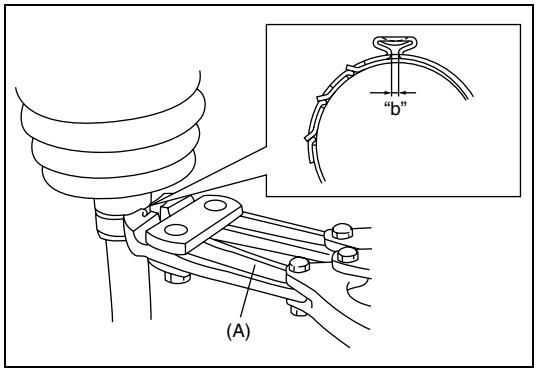

6) Fasten boot small band by using special tool.

NOTE:

- **Small band must not come out of its installation section.**
- **Be sure to caulk small band securely until complete contact "b" is obtained.**

Special tool
(A) : 09943-57010

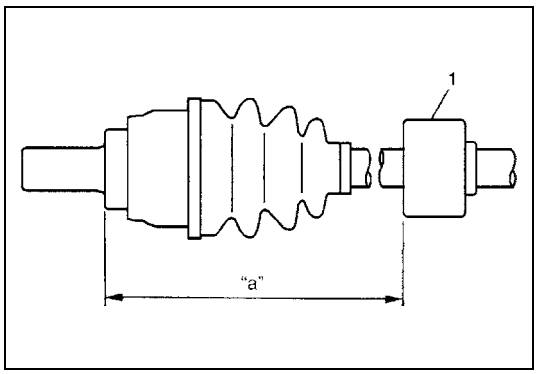

7) Install damper (1) on right side drive shaft according to dimension specified below.

Damper installation position
For M15 engine model
"a" : 174 – 180 mm (6.85 – 7.09 in.)
For Z13DT engine model
"a" : 157 – 163 mm (6.18 – 6.42 in.)

8) Fasten damper band referring to step 6) in assembly.

9) Set new differential side boot small band and differential side boot on shaft temporarily.

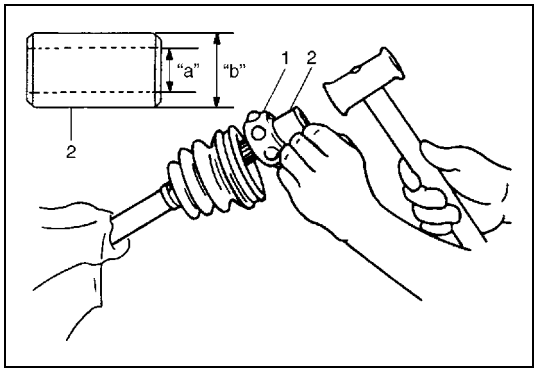

10) Install cage (1) onto shaft by using pipe (2).

Pipe diameter
"a" : 25 mm (0.98 in.) or more
"b" : 33 mm (1.30 in.) or less

CAUTION:
Install cage directing smaller outside diameter side to wheel side.

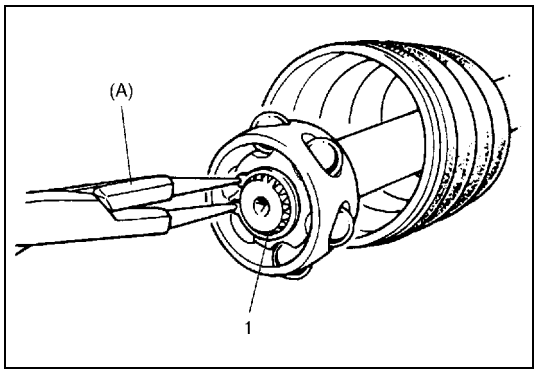

11) Install new snap ring (1) by using special tool.

Special tool
(A) : 09900-06107

12) Apply grease to entire surface of cage using specified grease included in spare parts.

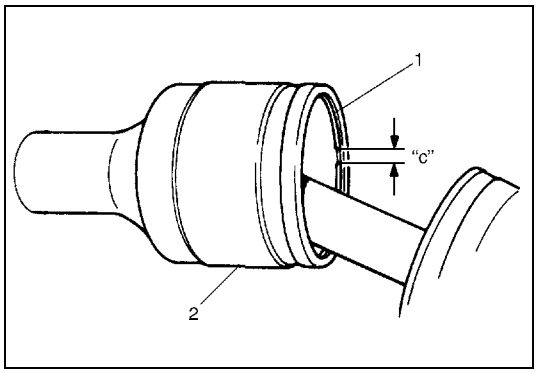

13) Insert cage into joint housing and fit circlip (1) into groove of joint housing (2).

CAUTION:
Position opening of snap ring "c" so that it will not be lined up with a ball.

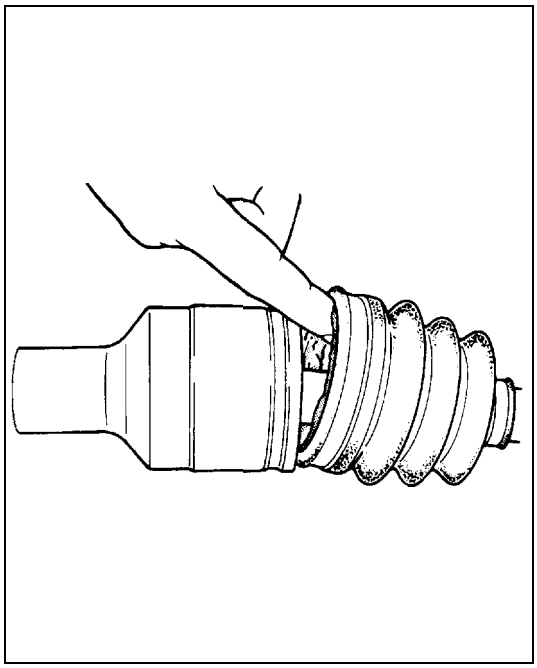

14) Apply the specified amount of grease to the inside of joint housing, and fit boot to joint housing. After fitting boot, insert screwdriver into boot on joint housing side and allow air to enter boot so that air pressure in boot becomes the same as atmospheric pressure.

Grease color
For right side shaft of M15 engine model : Black and grey
For left side shaft of M15 engine model : Black and grey
For right side shaft of Z13DT engine model
: Black and grey
Amount
For right side shaft of M15 engine model
: 75 – 95 g (2.6 – 3.4 oz)
For left side shaft of M15 engine model
: 70 – 90 g (2.5 – 3.2 oz)
For right side shaft of Z13DT engine model
: 80 – 100 g (2.8 – 3.5 oz)

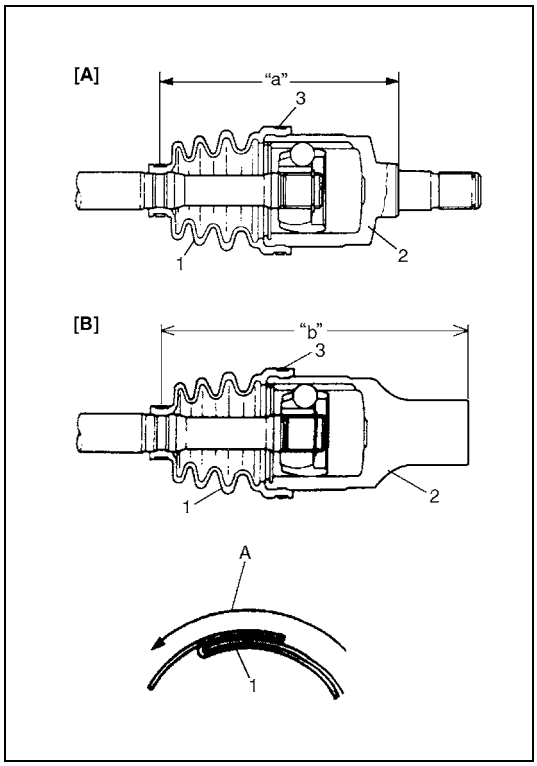

15) When fixing boot (1) to joint housing (2) with boot big band (3), adjust so that measurements become as indicated below. For fixing boot band, refer to steps 4) to 6).

Drive shaft boot fixing position
Left side shaft of vehicle with manual transaxle
"a" : 153.8 – 163.8 mm (6.06 – 6.45 in.)
Left side shaft of vehicle with automatic transaxle
"a" : 143.5 – 153.5 mm (5.65 – 6.04 in.)
Right side shaft
"b" : 182.8 – 192.8 mm (7.20 – 7.59 in.)

CAUTION:
- **Bend each boot band against forward rotation (A).**
- **Do not squeeze or distort boot when fastening it with bands. Distorted boot caused by squeezing air may reduce its durability.**

[A] : Left side shaft
[B] : Right side shaft

For left side shaft of Z13DT engine model

CAUTION:
To prevent any problem caused by washing solution, do not wash boots. Degreasing boots with cloth is allowed.

1) Wash each component (except boots).
   After wash, dry each component completely by blowing air.
2) Clean boots with cloth.

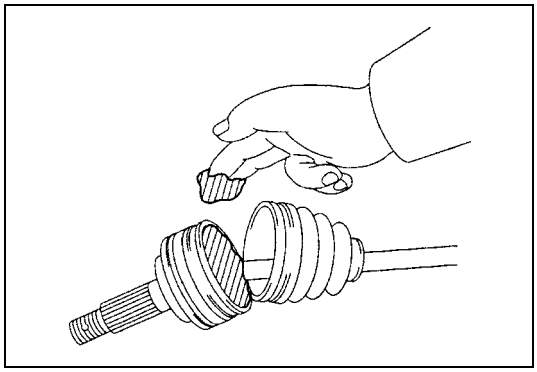

3) Install wheel side boot on shaft temporarily.
4) Apply grease in the supplied parts to the inside of joint housing.

Grease color : Dark brown
Amount : Approximately 85 g (3.0 oz)

5) Fit wheel side boot onto grooves of housing and shaft.

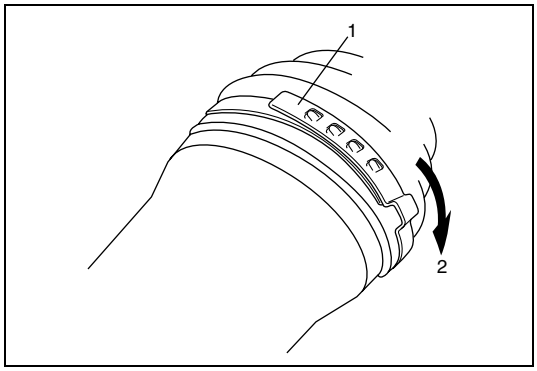

6) Place new wheel side boot big band onto boot putting band outer end (1) against forward rotation (2) as shown in figure.

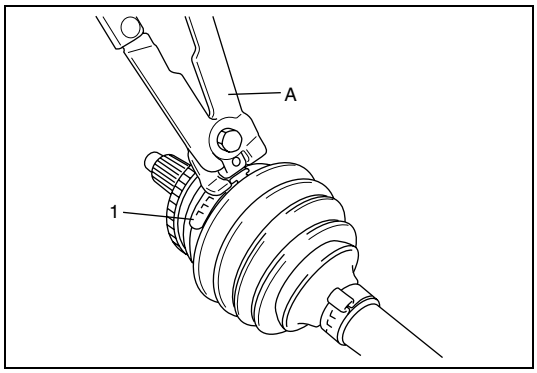

7) Confirm that wheel side boot is not stretched or contracted, and then fasten boot big band (1) securely by using special tool.

Special tool
(A) : 09943-55010 or 09943-57010

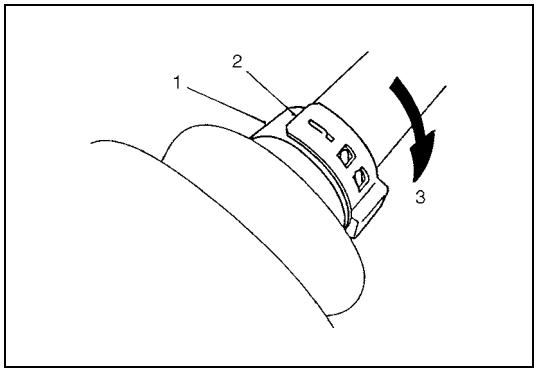

8) Place new wheel side boot small band (1) onto boot putting band outer end (2) against forward rotation (3) as shown in figure.

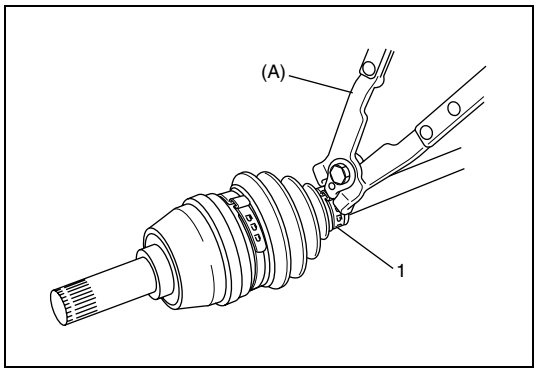

9) Confirm that wheel side boot is not stretched or contracted, and then fasten boot small band (1) securely by using special tool.

Special tool
(A) : 09943-55010 or 09943-57010

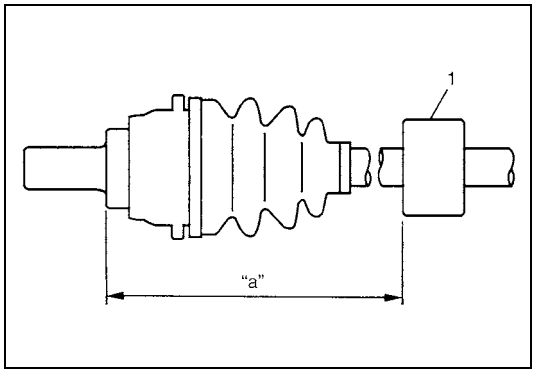

10) Install damper (1) on drive shaft according to dimension specified below.

Damper installation position
"a" : 157 – 163 mm (6.18 – 6.42 in.)

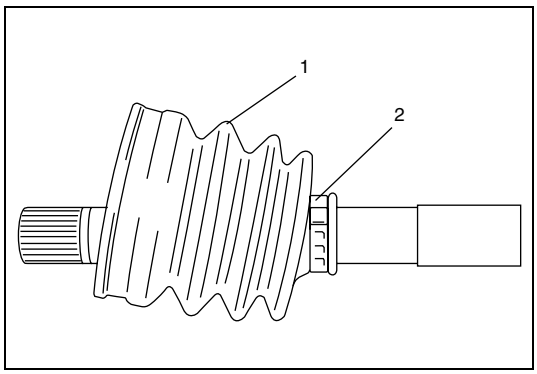

11) Set new differential side boot small band (2) and differential side boot (1) on shaft temporarily.

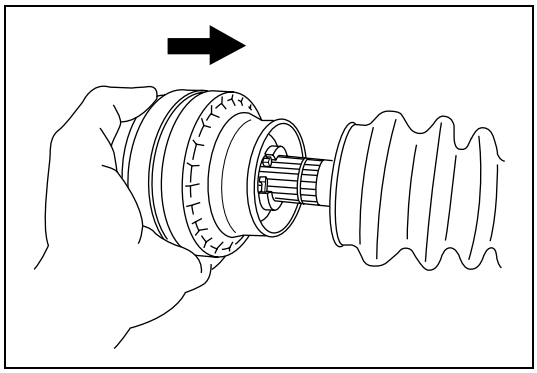

12) Apply grease in the supplied parts to the inside of differential side joint housing.

Grease color : Dark brown
Amount : Approximately 80 g (2.8 oz)

13) Place differential side joint onto spline of drive shaft and drive onto drive shaft by using plastic hammer until circlip engages.

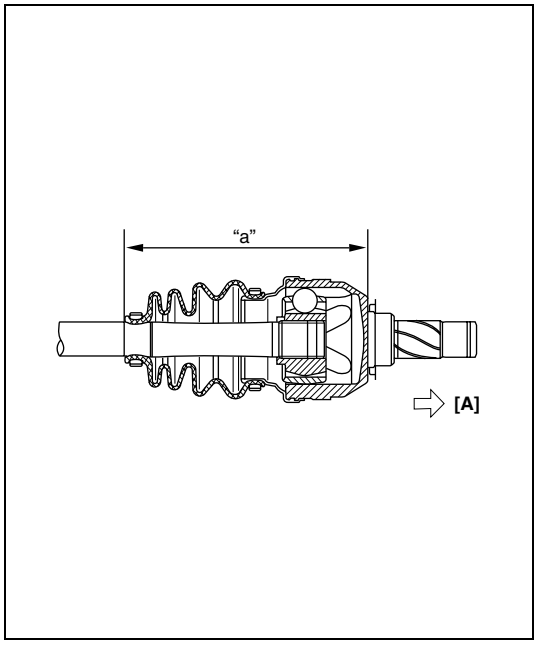

14) Fit boot to grooves of shaft and housing and adjust length "a" to specification below. Insert screwdriver into boot and allow air to enter boot so that air pressure in boot becomes the same as atmospheric pressure.

Drive shaft boot fixing position
"a" : Approximately 168.7 mm (6.64 in.)

A : Differential side

CAUTION:
Do not squeeze or distort boot when fastening it with bands. Distorted boot caused by squeezing air may reduce its durability.

15) Install and fasten new boot big and small bands at that position of step 14) in the same procedure as steps 6) to 9).

Center Shaft and Center Bearing Support Disassembly and Assembly

Disassembly

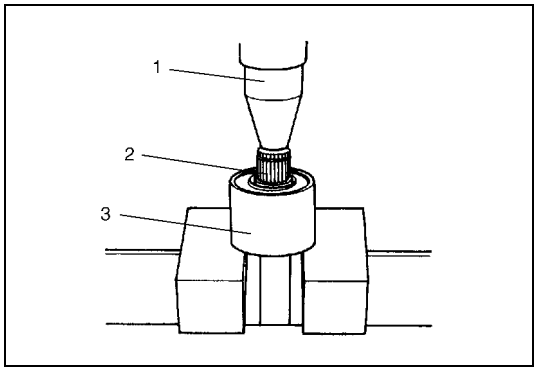

1) For M/T vehicle, go to the next step. For A/T vehicle, remove wheel side oil seal and circlip from center bearing support bracket (3).
2) Using hydraulic press (1), draw out center shaft (2) from center shaft support bearing.
3) Remove oil seals from center bearing support bracket (3).

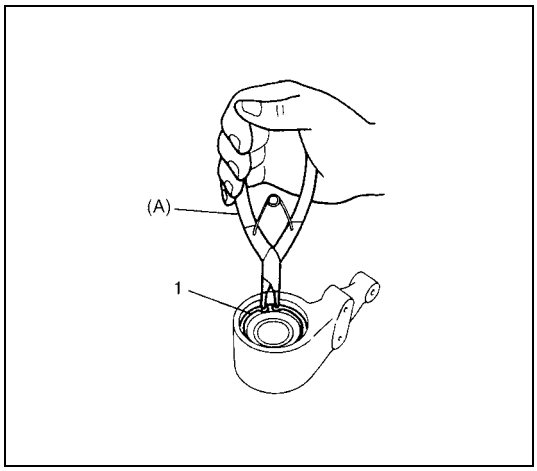

4) Remove bearing support circlip(s) (1) by using special tool.

Special tool
(A) : 09900-06108

NOTE:

Two circlips are installed in center bearing support bracket of M15 engine model. On the other hand, one circlip is installed in center bearing support bracket of Z13DT engine model.

5) Remove center shaft support bearing from center bearing support bracket.

Assembly

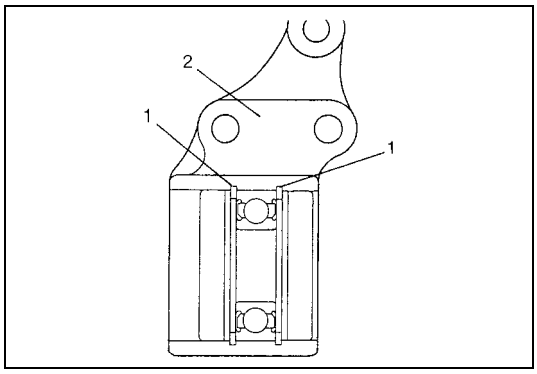

Install center shaft by reversing removal procedure and noting following points

- When installing circlip(s) (1), make sure that it fits in circlip groove in center bearing support bracket (2) securely as shown.

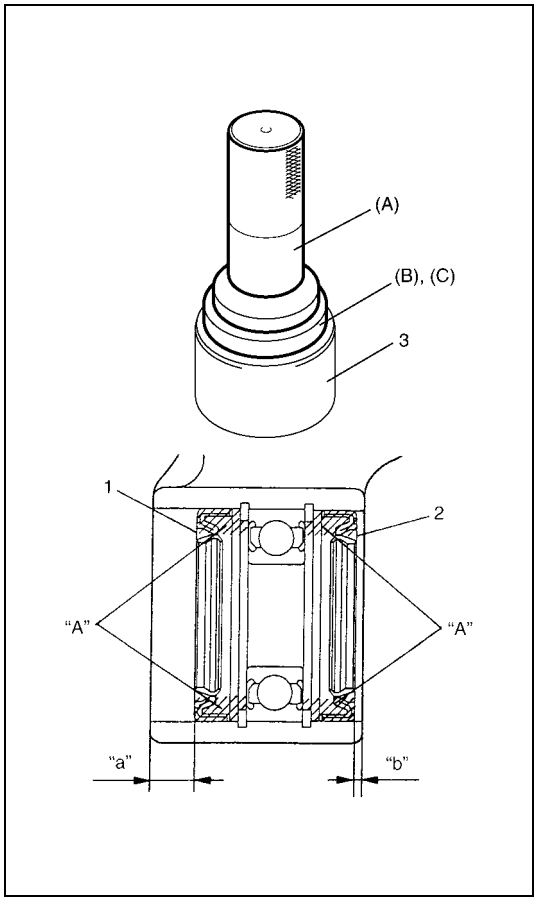

- When installing left oil seal (1) and right oil seal (2) to center bearing support bracket (3) by using special tools, use care so that the oil seals installed in proper direction and position as shown figure.

Special tool
(A) : 09913-76010 (For A/T vehicle)
(B) : 09951-46010 (For A/T vehicle)
(C) : 09944-66020 (For A/T vehicle)
09925-15410 (For M/T vehicle)

Distance
M/T vehicle with M15 engine
"a" : 8 – 9 mm (0.31 – 0.35 in.)
"b" : 2 – 3 mm (0.08 – 0.12 in.)
A/T vehicle with M15 engine
"a" : 0 mm (0 in.)
"b" : 0 mm (0 in.)
Z13DT engine model
"a" : 3.5 – 4.5 mm (0.14 – 0.18 in.)
"b" : 3.5 – 4.5 mm (0.14 – 0.18 in.)

- Be sure to apply grease to oil seal lip and bearing side space indicated in figure.

"A" : Grease 99000-25010

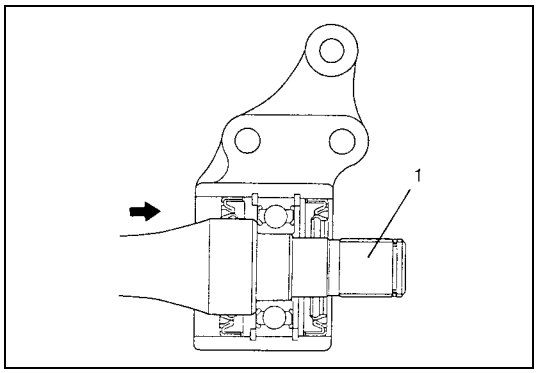

- Press-fit center shaft (1) from transaxle side.

Tightening Torque Specification

Fastening part	Tightening torque		
	N•m	kg-m	lb-ft
Oil drain plug	21	2.1	15.5
Oil filler/level plug (M15 engine model)	21	2.1	15.5
Oil filler/level plug (Z13DT engine model)	Tighten the plug 4 N•m (0.4 kg-m, 3.0 lb-ft), 45° and 135°.		
Ball stud bolt	60	6.0	43.5
Tie rod end nut	40	4.0	29.0
Drive shaft nut	175	17.5	126.5
Wheel bolt	95	9.5	69.0
Stabilizer mount bracket bolt	45	4.5	32.5
Center bearing support bolt (M15 engine model)	55	5.5	40.0
Center bearing support bolt (Z13DT engine model)	25	2.5	18.0
Oil pan bolt (Z13DT engine model)	18	1.8	13.0

Required Service Material

Material	Recommended SUZUKI product (Part Number)	Use
Lithium grease	SUZUKI SUPER GREASE A (99000-25010)	• Oil seal lips
Sealant	SUZUKI BOND NO. 1217G (99000-31260)	• Oil drain and filler/level plugs for manual transmission

Special Tools

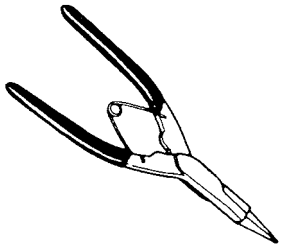 09900-06107 Snap ring plier (Open type)	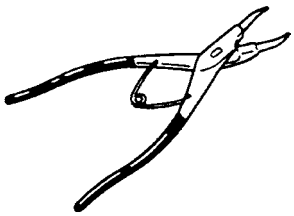 09900-06108 Snap ring plier (Close type)	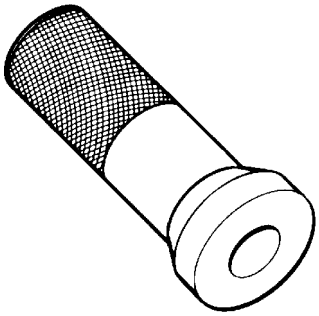 09913-76010 Differential bearing race inst	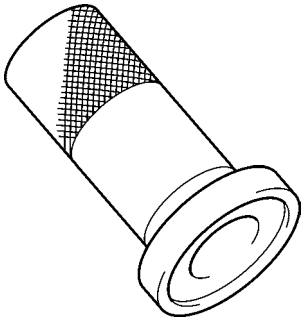 09925-15410 Oil seal installer
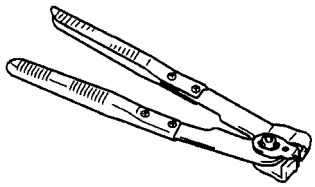 09943-55010 Boot clamp plier	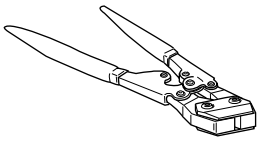 09943-57010 Band compressor	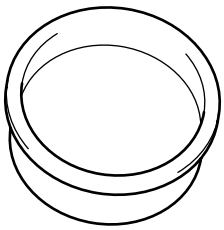 09944-66020 Installer bearing	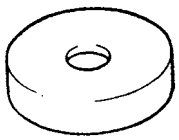 09951-46010 Installer drive shaft oil seal

SECTION 5

BRAKES

WARNING:

For vehicles equipped with Supplemental Restraint (Air Bag) System:

- **Service on and around the air bag system components or wiring must be performed only by an authorized SUZUKI dealer. Refer to "Air Bag System Components and Wiring Location View" under "General Description" in air bag system section in order to confirm whether you are performing service on or near the air bag system components or wiring. Please observe all WARNINGS and "Service Precautions" under "On-Vehicle Service" in air bag system section before performing service on or around the air bag system components or wiring. Failure to follow WARNINGS could result in unintentional activation of the system or could render the system inoperative. Either of these two conditions may result in severe injury.**
- **Technical service work must be started at least 90 seconds after the ignition switch is turned to the "LOCK" position and the negative cable is disconnected from the battery. Otherwise, the system may be activated by reserve energy in the Sensing and Diagnostic Module (SDM).**

NOTE:

- **When inspecting and servicing vehicle equipped with ABS, be sure to refer to section 5E first.**
- **All brake fasteners are important attaching parts in that they could affect the performance of vital parts and systems, and/or could result in major repair expense. They must be replaced with one of same part number or with an equivalent part if replacement becomes necessary. Do not use a replacement part of lesser quality or substitute design. Torque values must be used as specified during reassembly to assure proper retention of all parts. There is to be no welding as it may result in extensive damage and weakening of the metal.**
- **For the items with asterisk (*) in the "CONTENTS" below, refer to the same section of the Service Manual mentioned in "Foreword" of this manual.**

CONTENTS

General Description ..... *
Diagnosis ..... *
Road Testing Brakes ..... *
Brake Fluid Leaks ..... *
Substandard or Contaminated Brake Fluid ..... *
Diagnosis Table ..... *
Check and Adjustment ..... *
Air Bleeding of Brake System ..... *
Brake Pedal Free Height Check ..... *
Brake (Stop) Light Switch Check ..... *
Excessive Pedal Travel Check ..... *
Brake Pedal Play Check ..... *
Brake Fluid Level Check ..... *
Brake Hose and Pipe Check ..... *
Master Cylinder Check ..... *
Brake Disc Check ..... *
Brake Pad Check ..... *
Brake Shoe Check ..... *
Parking Brake Inspection and Adjustment ..... *
Flushing Brake Hydraulic System ..... *
Brake Fluid Pressure Test (if equipped with LSPV) ..... *
Booster Operation Check ..... *
Check air tightness ..... *
Check operation ..... *
Check air tightness under load ..... *
Tightening Torque Specifications 5-2
Required Service Material ..... *
Special Tool ..... *

Tightening Torque Specifications

Fastening part		Tightening torque		
		N•m	kg-m	lb-ft
Brake pipe flare nut		16	1.6	11.5
Brake bleeder plug	Front caliper	6.5	0.65	5.0
	Wheel cylinder	8.5	0.85	6.5
LSPV mounting bolt		26	2.6	19.0
LSPV spring end nut		20	2.0	14.5
LSPV spring bracket screw		9	0.9	6.5
Wheel bolt		95	9.5	69.0

SECTION 5A

BRAKES PIPE / HOSE / MASTER CYLINDER

WARNING:

For vehicles equipped with Supplemental Restraint (Air Bag) System:

- **Service on and around the air bag system components or wiring must be performed only by an authorized SUZUKI dealer. Refer to "Air Bag System Components and Wiring Location View" under "General Description" in air bag system section in order to confirm whether you are performing service on or near the air bag system components or wiring. Please observe all WARNINGS and "Service Precautions" under "On-Vehicle Service" in air bag system section before performing service on or around the air bag system components or wiring. Failure to follow WARNINGS could result in unintentional activation of the system or could render the system inoperative. Either of these two conditions may result in severe injury.**
- **Technical service work must be started at least 90 seconds after the ignition switch is turned to the "LOCK" position and the negative cable is disconnected from the battery. Otherwise, the system may be activated by reserve energy in the Sensing and Diagnostic Module (SDM).**

NOTE:

- **All brake fasteners are important attaching parts in that they could affect the performance of vital parts and systems, and/or could result in major repair expense. They must be replaced with one of same part number or with an equivalent part if replacement becomes necessary. Do not use a replacement part of lesser quality or substitute design. Torque values must be used as specified during reassembly to assure proper retention of all parts. There is to be no welding as it may result in extensive damage and weakening of the metal.**
- **For the items with asterisk (*) in the "CONTENTS" below, refer to the same section of the Service Manual mentioned in "Foreword" of this manual.**

CONTENTS

General Description ..... *
LSPV (Load Sensing Proportioning Valve) Assembly Description (if equipped) ..... *
Diagnosis ..... *
Check and Adjustment ..... *
On-Vehicle Service **5A-3**
Front Brake Hose Components Location ..... *
Front Brake Pipe Components Location 5A-4
Rear Brake Hose / Pipe Components Location ..... *
Brake Hose / Pipe Removal and Installation ..... *
Master Cylinder Reservoir Removal and Installation (for LH Model) ..... *
Master Cylinder Reservoir Removal and Installation (for RH Model) ..... *
Master Cylinder Components ..... *
Master Cylinder Removal and Installation (for LH Model) ..... *
Master Cylinder Removal and Installation (for RH Model) ..... *
Master Cylinder Disassembly and Assembly (for RH Model) ..... *
Master Cylinder Assembly Inspection (for RH Model) ..... *
Master Cylinder Check (for LH Model) ..... *
Master Cylinder Check (for RH Model) ..... *
Brake Booster Components Locator ..... *
Brake Booster Removal and Installation (for LH Model) ..... *
Brake Booster Removal and Installation (for RH Model) ..... *
Brake Booster Inspection (for LH Model) ..... *
Brake Booster Inspection and Adjustment (for RH Model) ..... *
LSPV (Load Sensing Proportioning Valve) Assembly Components Locator (if equipped) ..... *
LSPV (Load Sensing Proportioning Valve) Removal and Installation ..... *

LSPV (Load Sensing Proportioning Valve) Inspection and Adjustment..... *
Brake Pedal and Brake Pedal Bracket Components Location ..... *
Brake Pedal and Brake Pedal Bracket Removal and installation ..... *
Stop (Brake) Lamp Switch Removal and Installation..... *
Tightening Torque Specifications..... *
Required Service Material..... *
Special Tools..... *

On-Vehicle Service

CAUTION:

- **Lubricate rubber parts with clean, fresh brake fluid to ease assembly.**
- **Do not use lubricated shop air on brake parts as damage to rubber components may result.**
- **If any hydraulic component is removed or brake line disconnected, bleed the brake system.**
- **The torque values specified are for dry, unlubricated fasteners.**
- **Do not allow brake fluid to get on painted surfaces. Painted surfaces will be damaged by brake fluid.**

Front Brake Pipe Components Location

For vehicle with ABS (Gasoline Engine Model)

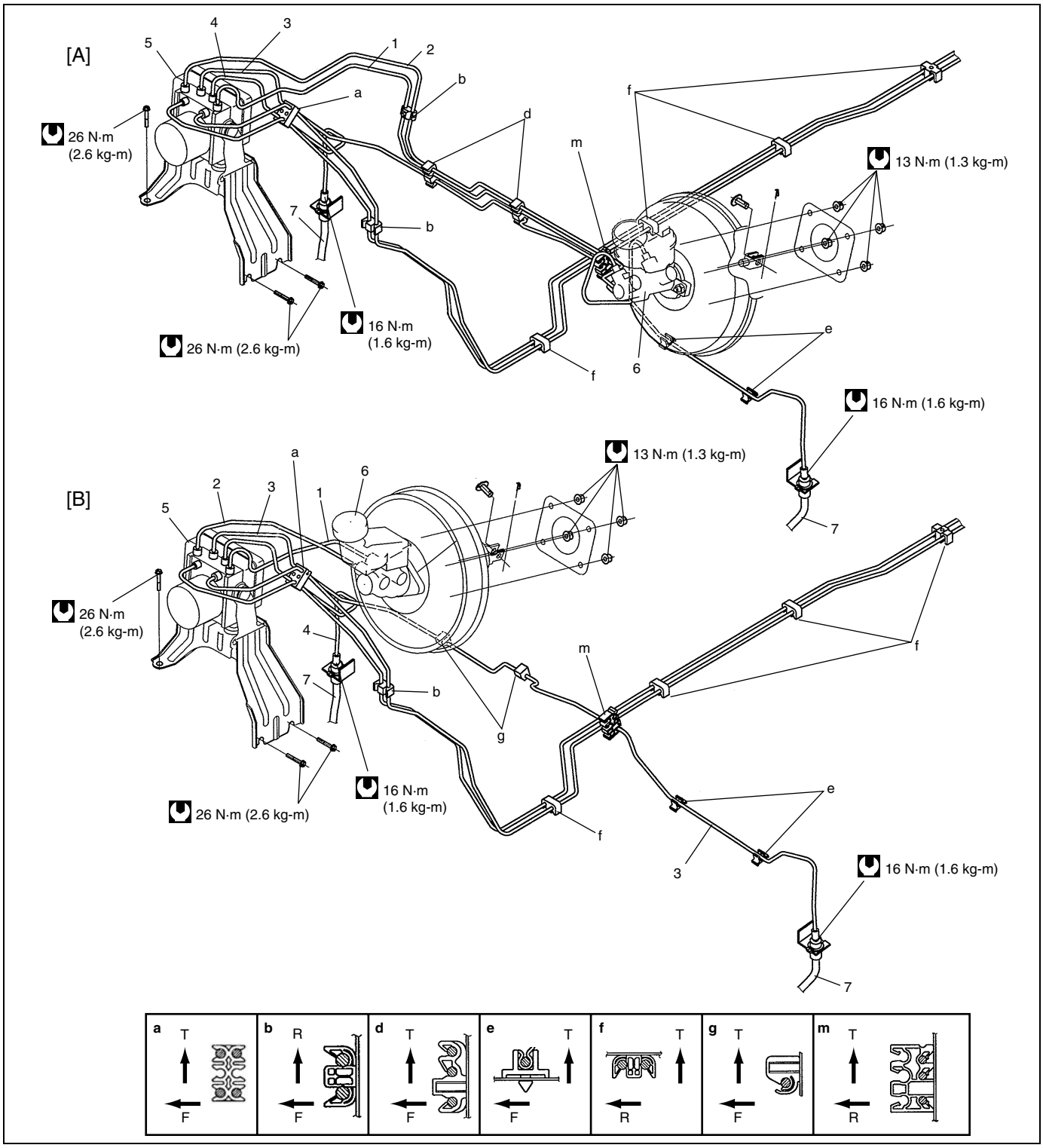

T: Top side	1. from master cylinder primary to ABS hydraulic unit	5. ABS hydraulic unit	[A]: For left-hand steering vehicle
F: Front side	2. from master cylinder secondary to ABS hydraulic unit	6. Master cylinder	[B]: For right-hand steering vehicle
R: Right side	3. from ABS hydraulic unit to left front brake	7. Front brake hose	Tightening torque
a-m: Clamp	4. from ABS hydraulic unit to right front brake		

For vehicle with ABS (Diesel Engine Model)

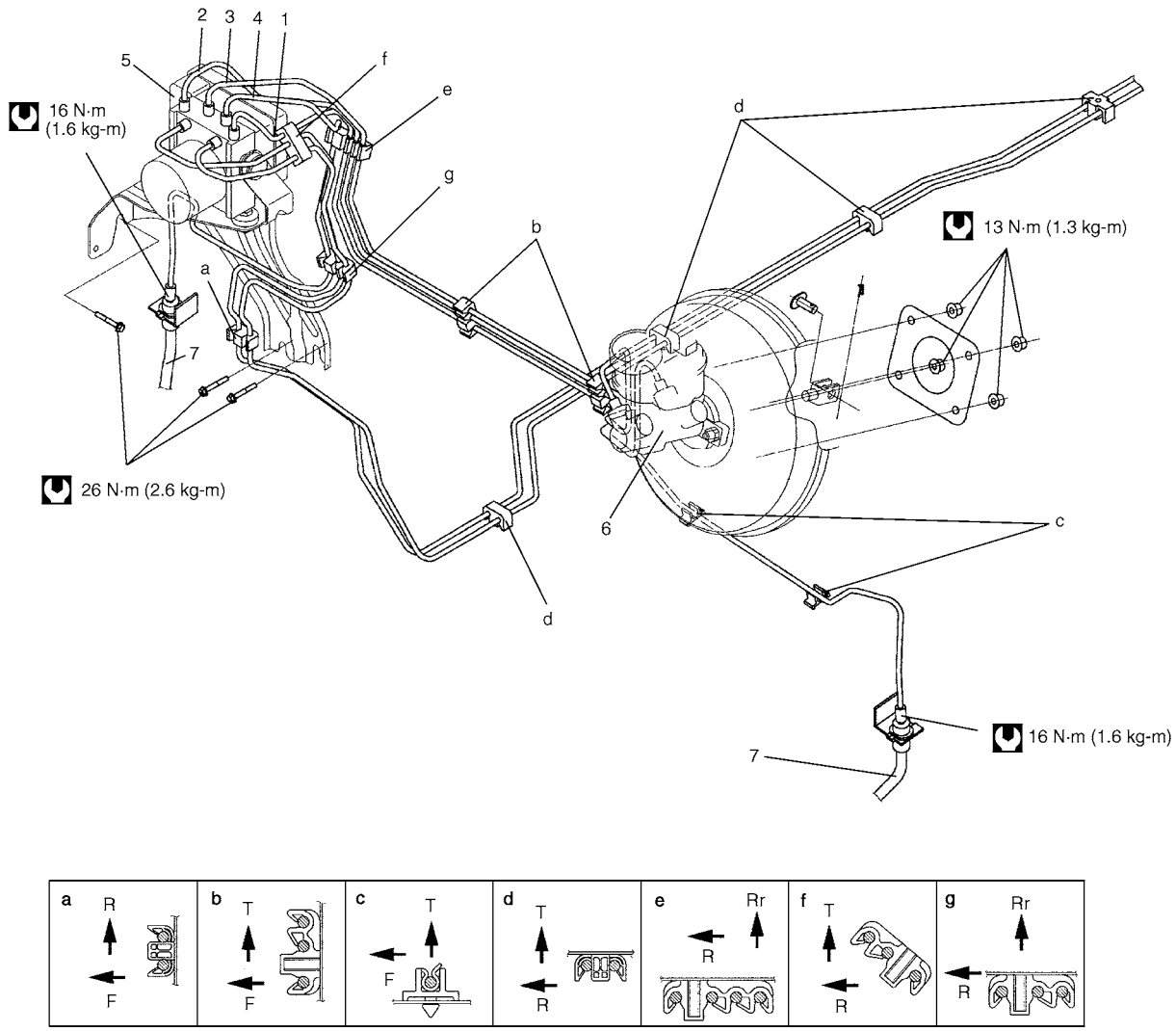

T: Top side	1. from master cylinder primary piston to ABS hydraulic unit	6. Master cylinder
F: Front side	2. from master cylinder secondary piston to ABS hydraulic unit	7. Front brake hose
R: Right side	3. Form ABS hydraulic unit to left front brake	Tightening torque
Rr: Rear side	4. Form ABS hydraulic unit to right front brake	
a-g: Clamps	5. ABS hydraulic unit	

For vehicle without ABS

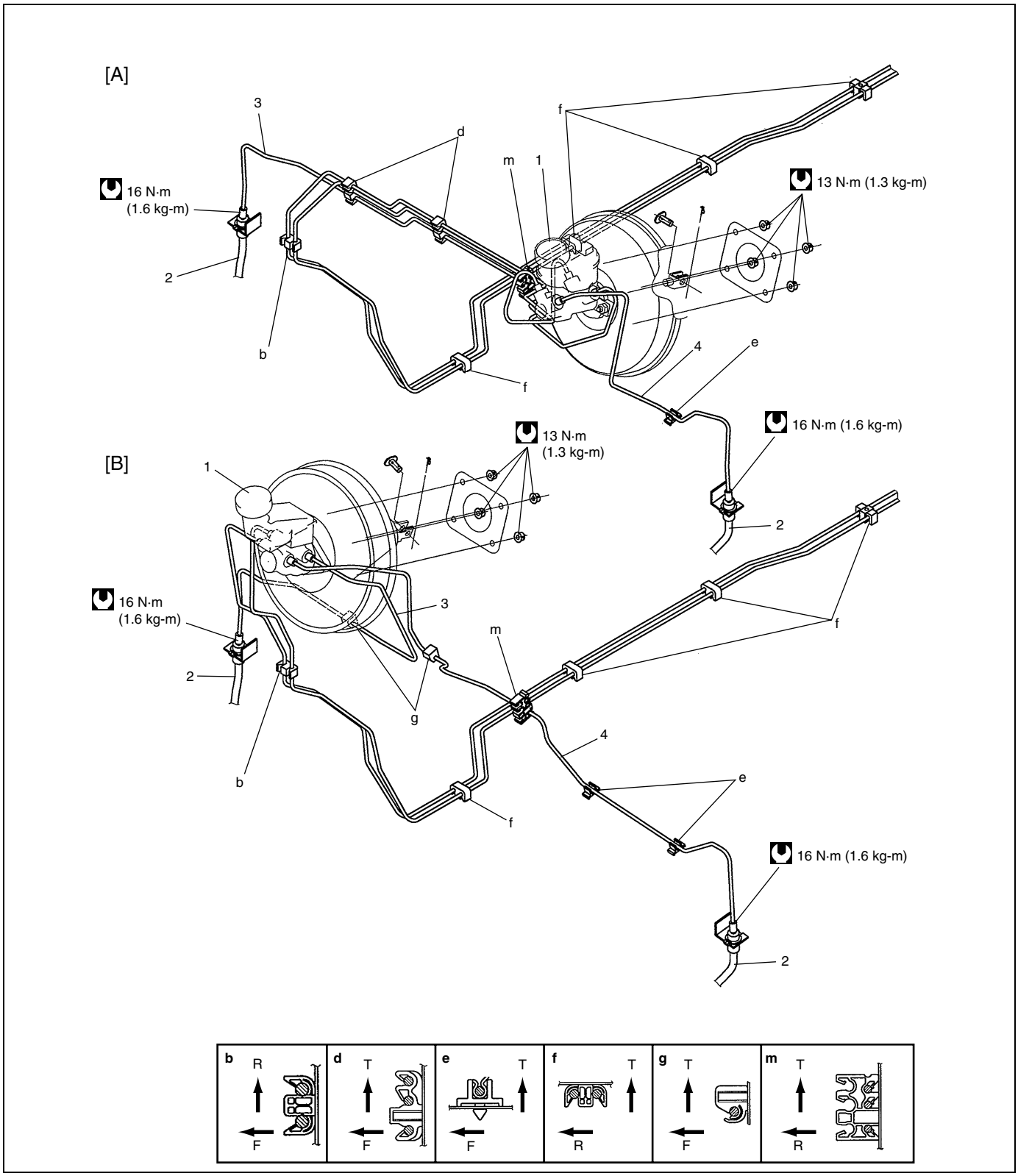

T: Top side	1. Master cylinder	[A]: For left-hand steering vehicle
F: Front side	2. Front brake hose	[B]: For right-hand steering vehicle
R: Right side	3. from master cylinder primary to right front brake	Tightening torque
b-m: Clamp	4. from master cylinder secondary to left front brake	

SECTION 5B

FRONT BRAKE

NOTE:

- **All brake fasteners are important attaching parts in that they could affect the performance of vital parts and systems, and/or could result in major repair expense. They must be replaced with one of same part number or with an equivalent part if replacement becomes necessary. Do not use a replacement part of lesser quality or substitute design. Torque values must be used as specified during reassembly to assure proper retention of all parts. There is to be no welding as it may result in extensive damage and weakening of the metal.**
- **For the items with asterisk (*) in the "CONTENTS" below, refer to the same section of the Service Manual mentioned in "Foreword" of this manual.**

CONTENTS

General Description ..... *
Front Brake Component Location ..... *
Diagnosis ..... *
Check and Adjustment ..... *
On-Vehicle Service **5B-2**
Front Disc Brake Pad Removal and Installation 5B-2
Front Disc Brake Pad Inspection ..... *
Front Brake Disc Inspection ..... *
Brake Caliper Carrier Inspection ..... *
Front Disc Brake Caliper Removal and Installation 5B-3
Front Disc Brake Caliper Boot Inspection ..... *
Front Disc Brake Caliper Disassembly and Assembly ..... *
Front Brake Disc Removal and Installation 5B-4
Tightening Torque Specification **5B-4**
Required Service Material ..... *
Special Tool ..... *

On-Vehicle Service

Front Disc Brake Pad Removal and Installation

Installation

CAUTION:
Observe CAUTION at the beginning of "Front Brake Components Location" in this section.

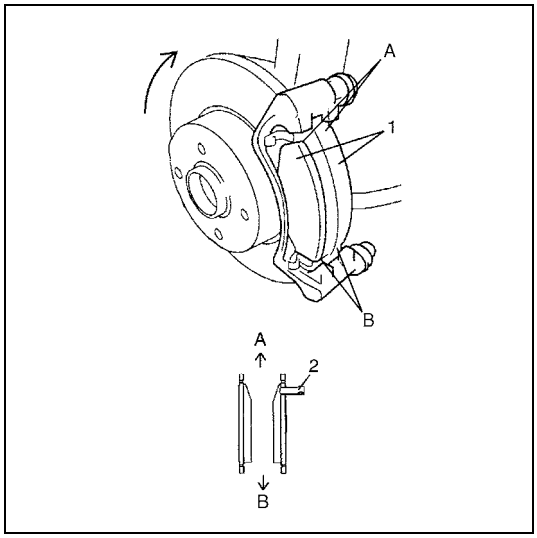

1) Install pads (1).

NOTE:

- **When installing brake pad, make sure that its tapered side is positioned upward (A) as shown in figure.**
- **Install pad with sensor (2) to vehicle center side on right wheel brake.**

A:	Upper side
B:	Lower side

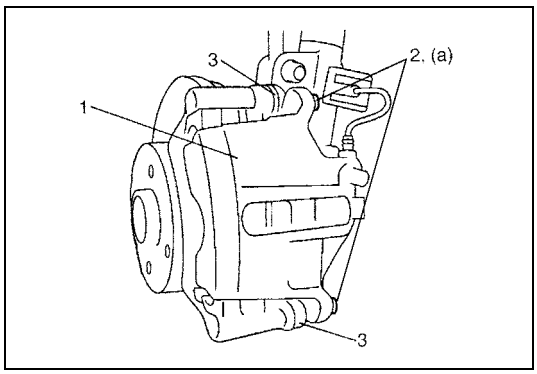

2) Install caliper (1) and tighten caliper pin bolts (2) to specification.

Tightening torque
Caliper pin bolt (a): 30 N·m (3.0 kg-m, 22.0 lb-ft)

NOTE:
Make sure that boots (3) are fit into groove securely.

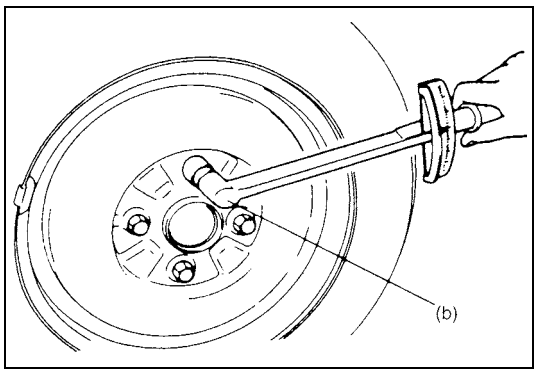

3) Tighten front wheel bolts to specification.

Tightening torque
Wheel bolt (b): 95 N·m (9.5 kg-m, 69.0 lb-ft)

4) Upon completion of installation, perform brake test.

Front Disc Brake Caliper Removal and Installation

Installation

CAUTION:
Observe CAUTION at the beginning of "Front Brake Components Location" in this section.

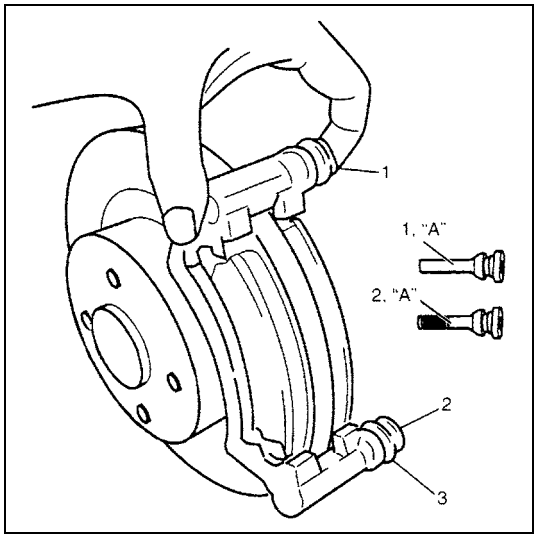

Before installing caliper (cylinder body) to carrier, check to ensure that guiding pin (1) and locking pin (2) inserted in each caliper carrier hole can be moved smoothly in thrust direction.

NOTE:
Use rubber grease whose viscosity varies very little even at –40 °C (–40 °F) if applied.

"A": Rubber grease

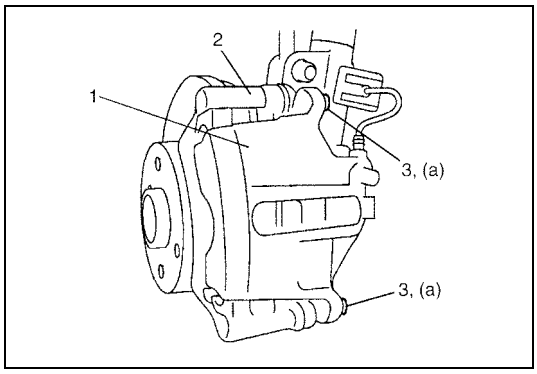

1) Install caliper (1) to caliper carrier (2).
2) Tighten caliper pin bolts (3) to specifications.

Tightening torque
Caliper pin bolt (a): 30 N·m (3.0 kg-m, 22.0 lb-ft)

NOTE:
Make sure that boots are fit into groove securely.

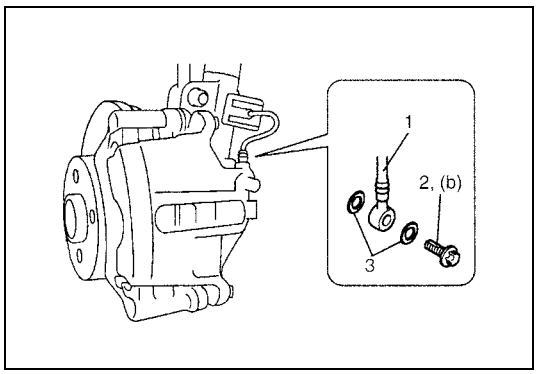

3) Install brake flexible hose (1) and new gaskets (3) as shown and tighten hose bolt (2) to specification.

Tightening torque
Flexible hose bolt (b): 23 N·m (2.3 kg-m, 17.0 lb-ft)

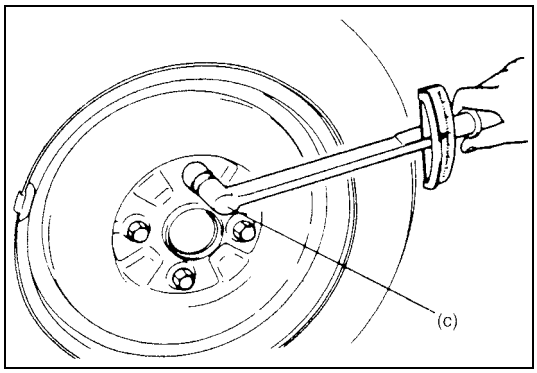

4) Tighten wheel bolts to specification.

Tightening torque
Wheel bolt (c): 95 N·m (9.5 kg-m, 69.0 lb-ft)

5) After completing installation, fill reservoir with brake fluid and bleed brake system. Perform brake test and check each installed part for oil leakage.

Front Brake Disc Removal and Installation

CAUTION:
During removal, be careful not to damage brake flexible hose and not to depress brake pedal.

Installation

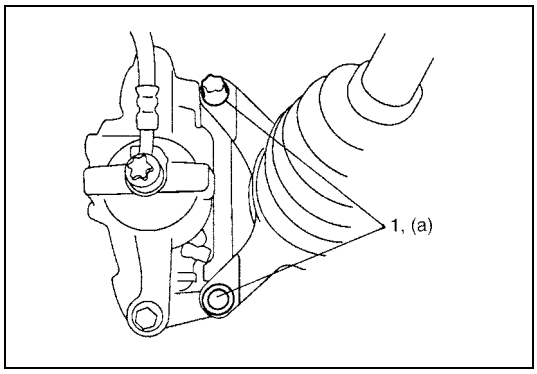

1) Install disc to wheel hub and tighten disc securing screws.
2) Install caliper assembly to steering knuckle.
3) Tighten caliper carrier bolts (1) to specification.

Tightening torque
Caliper carrier bolt (a): 95 N·m (9.5 kg-m, 69.0 lb-ft)

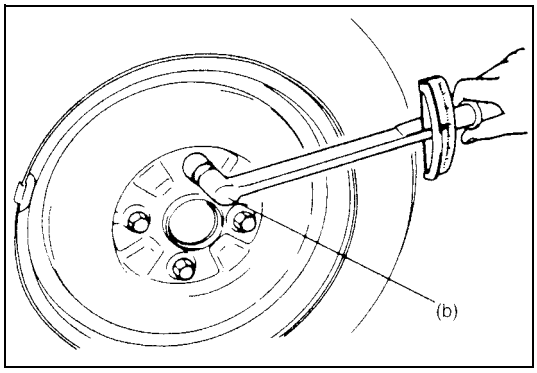

4) Tighten front wheel bolts to specifications.

Tightening torque
Wheel bolt (b): 95 N·m (9.5 kg-m, 69.0 lb-ft)

5) Upon completion of installation, perform brake test.

Tightening Torque Specification

Fastening part	Tightening torque		
	N•m	kg-m	lb-ft
Caliper pin bolt	30.0	3.0	22.0
Wheel bolt	95.0	9.5	69.0
Flexible hose bolt	23.0	2.3	17.0
Caliper carrier bolt	95.0	9.5	69.0
Brake disc securing screw	9.0	0.9	6.5

SECTION 5C

PARKING AND REAR BRAKE

WARNING:

For vehicles equipped with Supplemental Restraint (Air Bag) System:

- **Service on and around the air bag system components or wiring must be performed only by an authorized SUZUKI dealer. Refer to "Air Bag System Components and Wiring Location View" under "General Description" in air bag system section in order to confirm whether you are performing service on or near the air bag system components or wiring. Please observe all WARNINGS and "Service Precautions" under "On-Vehicle Service" in air bag system section before performing service on or around the air bag system components or wiring. Failure to follow WARNINGS could result in unintentional activation of the system or could render the system inoperative. Either of these two conditions may result in severe injury.**
- **Technical service work must be started at least 90 seconds after the ignition switch is turned to the "LOCK" position and the negative cable is disconnected from the battery. Otherwise, the system may be activated by reserve energy in the Sensing and Diagnostic Module (SDM).**

NOTE:

- **All brake fasteners are important attaching parts in that they could affect the performance of vital parts and systems, and/or could result in major repair expense. They must be replaced with one of same part number or with an equivalent part if replacement becomes necessary. Do not use a replacement part of lesser quality or substitute design. Torque values must be used as specified during reassembly to assure proper retention of all parts. There is to be no welding as it may result in extensive damage and weakening of the metal.**
- **For the items with asterisk (*) in the "CONTENTS" below, refer to the same section of the Service Manual mentioned in "Foreword" of this manual.**

5C

CONTENTS

Diagnosis ..... *
Check and Adjustment ..... *
On-Vehicle Service 5C-2
Brake Drum Component Location ..... *
Brake Drum Removal and Installation (for 2WD Model) 5C-2
Brake Drum Removal and Installation (for 4WD Model) 5C-3
Drum Brake Component Parts Inspection ..... *
ABS Sensor Ring Replacement (for 2WD Model) ..... *
ABS Sensor Ring Replacement (for 4WD Model) ..... *
Brake Shoe Removal and Installation ..... *
Wheel Cylinder Removal and Installation ..... *
Wheel Cylinder Inspection ..... *
Brake Back Plate Removal and Installation (for 2WD Model) 5C-4
Brake Back Plate Removal and Installation (for 4WD Model) ..... *
Parking Brake Cable Component Location ..... *
Parking Brake Cable Removal and Installation ..... *
Parking Brake Lever Removal and Installation ..... *
Tightening Torque Specification 5C-5
Required Service Materials ..... *
Special Tools ..... *

On-Vehicle Service

Brake Drum Removal and Installation (for 2WD Model)

Installation

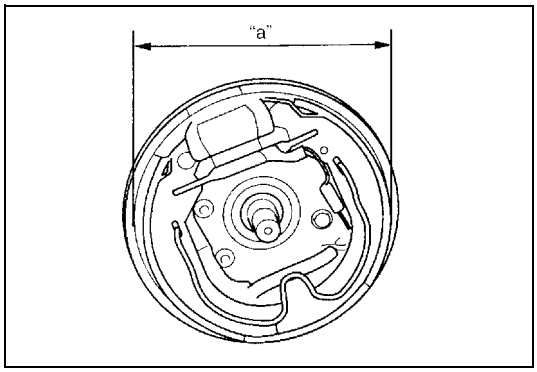

1) Before installing brake drum, check outer diameter "a" of brake shoes. If it is not within value as specified below, adjust it to specification by turning adjuster.

Brake shoes outer diameter "a"	=	Measured brake drum inside diameter	–	0.5 to 1.0 mm (0.02 to 0.04 in.)

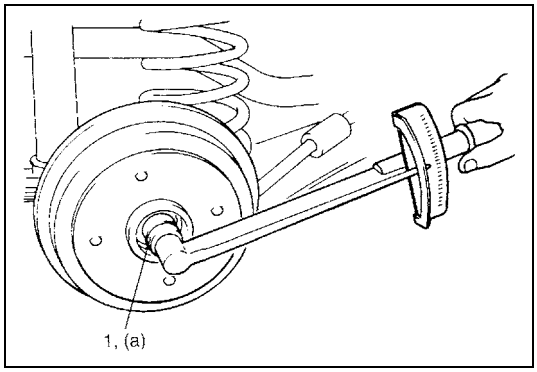

2) Install brake drum after making sure that inside of brake drum and brake shoes are free from dirt and oil.
3) Install new spindle nut (1).
4) Tighten spindle nut (1) to specified torque.

Tightening torque
Spindle nut (a): 175 N·m (17.5 kg-m, 126.5 lb-ft)

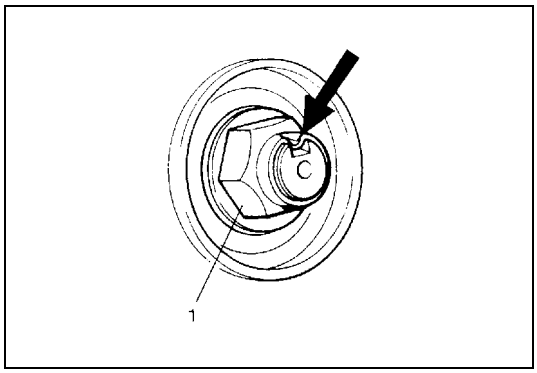

5) Calk spindle nut (1).
6) Install spindle cap.

NOTE:

- **When installing spindle cap, hammer lightly several locations on the collar of cap until collar comes closely into contact with brake drum.**
- **If fitting part of cap is deformed or damaged or if it is fitted loosely, replace with new one.**

7) Upon completion of all jobs, depress brake pedal with about 300 N (30 kg, 66 lbs) load at least 15 – 20 times until adjuster actuator clicking sound from drum brake can not be heard so as to obtain proper drum-to-shoe clearance.
   Adjust parking brake cable. For adjustment, refer to "Parking Brake Inspection and Adjustment" in Section 5.
8) Install console box cap if removed.

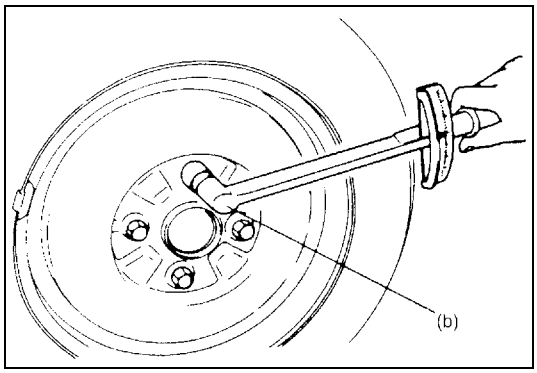

9) Install wheel and tighten wheel bolts to specified torque.

Tightening torque
Wheel bolt (b): 95 N·m (9.5 kg-m, 69.0 lb-ft)

10) Check to ensure that brake drum is free from dragging and proper braking is obtained. Then remove vehicle from hoist and perform brake test (foot brake and parking brake).

Brake Drum Removal and Installation (for 4WD Model)

Installation

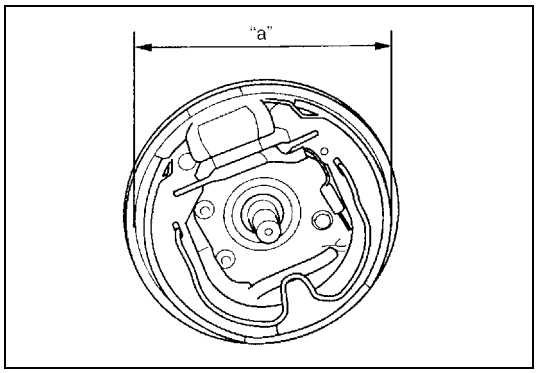

1) Before installing brake drum, check outer diameter "a" of brake shoes. If it is not within value as specified below, adjust it to specification by turning adjuster.

Brake shoes outer diameter "a"	=	Measured brake drum inside diameter	–	0.5 to 1.0 mm (0.02 to 0.04 in.)

2) Install brake drum after making sure that inside of brake drum and brake shoes are free from dirt and oil.

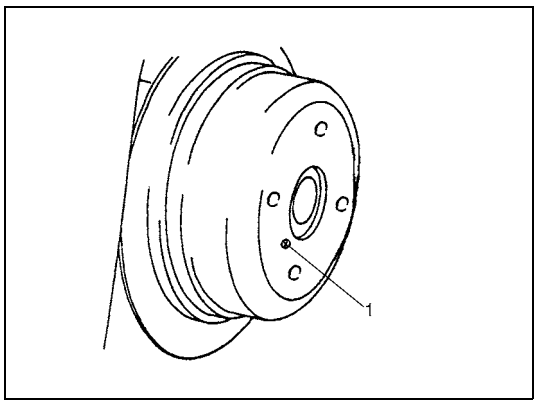

3) Tighten screw (1) to specified torque.

Tightening torque
Brake dram screw (a): 9 N·m (0.9 kg-m, 6.5 lb-ft)

4) Upon completion of all jobs, depress brake pedal with about 300 N (30 kg, 66 lbs) load at least 15 – 20 times until adjuster actuator clicking sound from drum brake can not be heard so as to obtain proper drum-to-shoe clearance.
Adjust parking brake cable. For adjustment refer to "Parking Brake Inspection and Adjustment" in Section 5.
5) Install console box cap if removed.

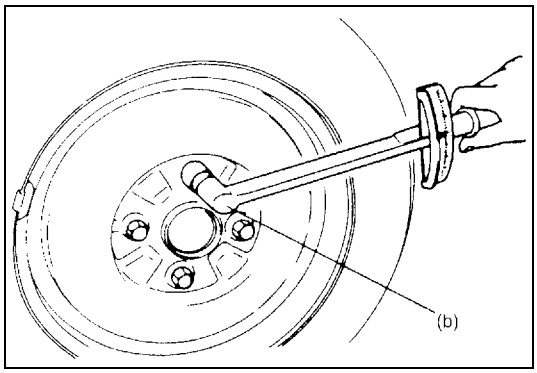

6) Install wheel and tighten wheel bolts to specified torque.

Tightening torque
Wheel bolt (b): 95 N·m (9.5 kg-m, 69.0 lb-ft)

7) Check to ensure that brake drum is free from dragging and proper braking is obtained. Then remove vehicle from hoist and perform brake test (foot brake and parking brake).

Brake Back Plate Removal and Installation (for 2WD Model)

Installation

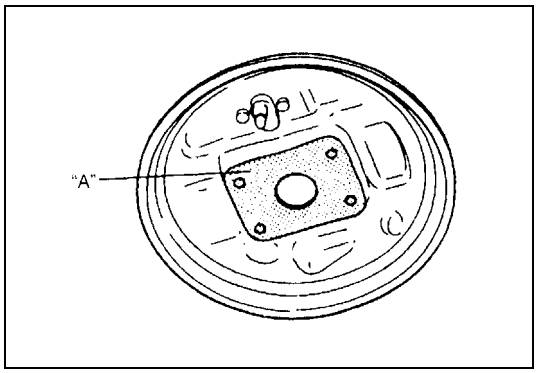

1) Apply water tight sealant to mating surfaces of brake back plate and rear axle.

"A": Sealant 366E, 99000-31090

NOTE:

In case of vehicle equipped with ABS, do not apply sealant around hole for wheel speed sensor.

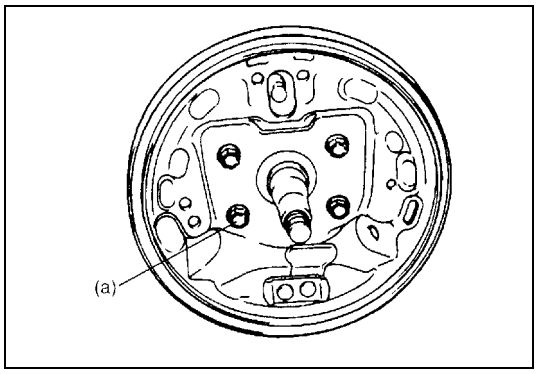

2) Install brake back plate and tighten back plate bolts to specified torque.

Tightening torque
Brake back plate bolt (a): 23 N·m (2.3 kg-m, 17.0 lb-ft)

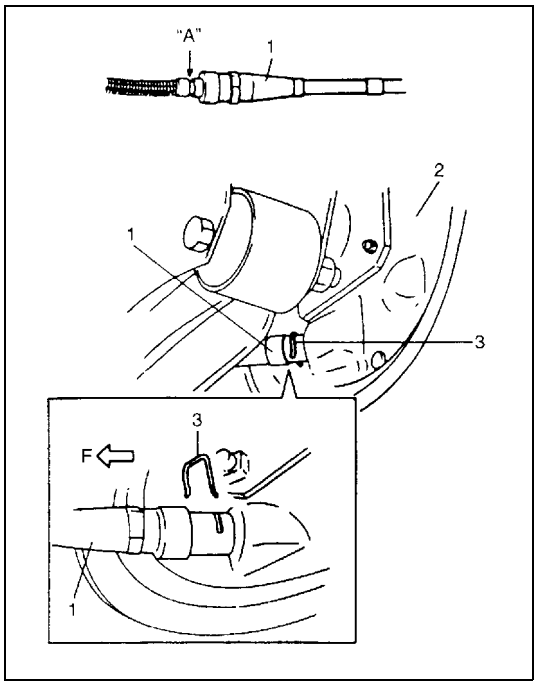

3) Apply water tight sealant where plate and cable contact, and run parking brake cable (1) through brake back plate (2) and secure it with clip (3).

"A": Sealant 366E, 99000-31090

F: Forward

4) Install wheel cylinder, and tighten wheel cylinder bolts and brake pipe flare nut to specified torque. Refer to "Installation" of "Wheel Cylinder Removal and Installation" in this section.
5) Install brake shoe referring to "Installation" of "Brake Shoe Removal and Installation" in this section.
6) Install brake drum. Refer to "Installation" of "Brake Drum Removal and Installation (for 2WD Model) or "Brake Drum Removal and Installation (for 4WD Model)" in this section.

7) Fill reservoir with brake fluid and bleed brake system. For bleeding operation, referring to “Bleeding Brake” in Section 5.

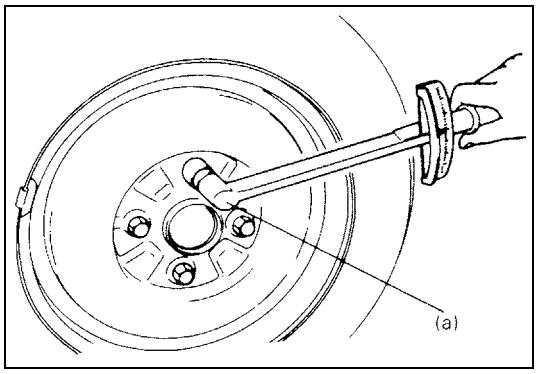

8) Install wheel and tighten wheel bolts to specified torque.

Tightening torque
Wheel bolt (a): 95 N·m (9.5 kg-m, 69.0 lb-ft)

9) Upon completion of all jobs, depress brake pedal with about 300 N (30 kg, 66 lbs) load at least 10 – 15 times until adjuster actuator clicking sound from drum brake can not be heard so as to obtain proper drum-to-shoe clearance.
   Adjust parking brake cable. (For adjustment, refer to “Parking Brake Inspection and Adjustment” in Section 5.)
10) Install console box cap.
11) Check to ensure that brake drum is free from dragging and proper braking is obtained. Then remove vehicle from hoist and perform brake test (foot brake and parking brake).
12) Check each installed part for oil leakage.

Tightening Torque Specification

Fastening part	Tightening torque		
	N•m	kg-m	lb-ft
Brake back plate bolt	23.0	2.3	17.0
Brake dram screw	9.0	0.9	6.5
Parking brake lever mounting bolt	26.0	2.6	19.0
Spindle nut	175.0	17.5	126.5
Wheel bolt	95.0	9.5	69.0

SECTION 6

ENGINE GENERAL INFORMATION AND DIAGNOSIS (M15 ENGINE)

WARNING:

For vehicles equipped with a Supplemental Restraint (Air Bag) System:

- **Service on and around the air bag system components or wiring must be performed only by an authorized SUZUKI dealer. Refer to "Air Bag System Components and Wiring Location View" under "General Description" in air bag system section in order to confirm whether you are performing service on or near the air bag system components or wiring. Please observe all WARNINGS and "Service Precautions" under "On-Vehicle Service" in air bag system section before performing service on or around the air bag system components or wiring. Failure to follow WARNINGS could result in unintentional activation of the system or could render the system inoperative. Either of these two conditions may result in severe injury.**
- **Technical service work must be started at least 90 seconds after the ignition switch is turned to the "LOCK" position and the negative cable is disconnected from the battery. Otherwise, the system may be activated by reserve energy in the Sensing and Diagnostic Module (SDM).**

NOTE:

For the items with asterisk (*) in the "CONTENTS" below, refer to the same section of the Service Manual mentioned in "Foreword" of this manual.

6

CONTENTS

General Information ..... *
- Statement on Cleanliness and Care ..... *
- Precaution ..... *
  - Precaution on engine service ..... *
  - Precaution on fuel system service ..... *
  - Fuel pressure relief procedure ..... *
  - Fuel leakage check procedure ..... *

Diagnosis ..... *
- Engine Diagnosis General Description ..... *
- On-Board Diagnostic System Description ..... *
- Precaution in Diagnosing Trouble for Engine 6-3
- Engine and Emission Control System Check ..... *
- Customer Problem Inspection Form (Example) ..... *
- Malfunction Indicator Lamp (MIL) Check ..... *
- Diagnostic Trouble Code (DTC) Check ..... *
- Diagnostic Trouble Code (DTC) Clearance ..... *
- DTC Table 6-4
- Fail-Safe Table ..... *
- Visual Inspection ..... *
- Engine Basic Inspection ..... *
- Engine Symptom Diagnosis ..... *
- Scan Tool Data 6-8
- Inspection of ECM and Its Circuits 6-13
- Table A-1 Malfunction Indicator Lamp Circuit Check – Lamp Does Not Come "ON" with Ignition Switch ON (But Engine Stops) ..... *
- Table A-2 Malfunction Indicator Lamp Circuit Check-lamp Remains "ON" after Engine Starts ..... *
- Table A-3 ECM Power and Ground Circuit Check-MIL Doesn't Light with Ignition Switch ON and Engine Doesn't Start Though It Is Cranked Up ..... *
- DTC P0010 Camshaft Position Actuator Circuit ..... *
- DTC P0011 Camshaft Position – Timing Over-Advanced or System Performance
- DTC P0012 Camshaft Position – Timing Over-Retarded ..... *

DTC P0101 Mass Air Flow Circuit Range/Performance ..... *
DTC P0102 Mass Air Flow Circuit Low Input ..... *
DTC P0103 Mass Air Flow Circuit High Input ..... *
DTC P0112 Intake Air Temperature Sensor Circuit Low ..... *
DTC P0113 Intake Air Temperature Sensor Circuit High ..... *
DTC P0117 Engine Coolant Temperature Circuit Low ..... *
DTC P0118 Engine Coolant Temperature Circuit High ..... *
DTC P0121 Throttle Position Sensor Circuit Range / Performance ..... *
DTC P0122 Throttle Position Sensor Circuit Low ..... *
DTC P0123 Throttle Position Circuit High Input ..... *
DTC P0131 O2 Sensor (HO2S) Circuit Low Voltage (Sensor-1) ..... *
DTC P0132 O2 Sensor (HO2S) Circuit High Voltage (Sensor-1) ..... *
DTC P0133 O2 Sensor (HO2S) Circuit Slow Response (Sensor-1) ..... *
DTC P0134 Heated Oxygen Sensor (HO2S) No Activity Detected (Sensor-1) ..... *
DTC P0031 HO2S Heater Control Circuit Low (Sensor-1)
DTC P0032 HO2S Heater Control Circuit High (Sensor-1) ..... *
DTC P0137 O2 Sensor (HO2S) Circuit Low Voltage (Sensor-2) ..... *
DTC P0138 O2 Sensor (HO2S) Circuit High Voltage (Sensor-2) ..... *
DTC P0037 HO2S Heater Control Circuit Low (Sensor-2)
DTC P0038 HO2S Heater Control Circuit High (Sensor-2) ..... *
DTC P0171 System Too Lean ..... *
DTC P0172 System Too Rich ..... *
DTC P0300 Random Misfire Detected ..... *
DTC P0301 Cylinder 1 Misfire Detected ..... *
DTC P0302 Cylinder 2 Misfire Detected ..... *
DTC P0303 Cylinder 3 Misfire Detected ..... *
DTC P0304 Cylinder 4 Misfire Detected ..... *
DTC P0327 Knock Sensor Circuit Low
DTC P0328 Knock Sensor Circuit High ..... *
DTC P0335 Crankshaft Position (CKP) Sensor Circuit ..... *
DTC P0340 Camshaft Position Sensor Circuit ..... *
DTC P0401 Exhaust Gas Recirculation Flow Insufficient Detected
DTC P0402 Exhaust Gas Recirculation Flow Excessive Detected ..... *
DTC P0403 Exhaust Gas Recirculation Control Circuit ..... *
DTC P0420 Catalyst System Efficiency Below Threshold ..... *
DTC P0443 Evaporative Emission System Purge Control Valve Circuit ..... *
DTC P0462 Fuel Level Sensor Circuit Low ..... *
DTC P0463 Fuel Level Sensor Circuit High ..... *
DTC P0480 Fan 1 (Radiator Cooling Fan) Control Circuit 6-30
DTC P0481 Fan 2 (A/C Condenser Fan) Control Circuit ..... *
DTC P0500 Vehicle Speed Sensor (VSS) Malfunction ..... *
DTC P0505 Idle Air Control System ..... *
DTC P0506 Idle Air Control System RPM Lower than Expected
DTC P0507 Idle Air Control System RRM Higher than Expected ..... *
  Idle air control (IAC) valve operation check ..... *
  Idle air control (IAC) valve check ..... *
DTC P0616 Starter Relay Circuit Low ..... *
DTC P0617 Starter Relay Circuit High ..... *
DTC P0107 Manifold Absolute Pressure Low Input ..... *
DTC P0108 Manifold Absolute Pressure High Input ..... *
DTC P0601 Internal Control Module Memory Check Sum Error
DTC P0602 Control Module Programming Error ..... *
DTC P1510 ECM Back-up Power Supply Malfunction ..... *
DTC P1601 CAN Communication Error 6-33
DTC P1603 TCM Trouble Code Detected 6-35
DTC P2227 Barometric Pressure Circuit Range/Performance
DTC P2228 Barometric Pressure Circuit Low
DTC P2229 Barometric Pressure Circuit High ..... *
Table B-1 Fuel Injector Circuit Check ..... *
Table B-2 Fuel Pump and Its Circuit Check ..... *
Table B-3 Fuel Pressure Check ..... *
Table B-4 Idle Air Control System Check ..... *
Table B-5 A/C Signal Circuits Check (Vehicle with A/C) ..... *
Table B-6 Electric Load Signal Circuit Check ..... *
Table B-7 Radiator Fan Control System Check 6-36
Table B-8 A/C Condenser Fan Control System ..... *
Special Tool ..... *

Precaution in Diagnosing Trouble for Engine

- Don't disconnect couplers from ECM, battery cable from battery, ECM ground wire harness from engine or main fuse before confirming diagnostic information (DTC, freeze frame data, etc.) stored in ECM memory. Such disconnection will erase memorized information in ECM memory.
- Diagnostic information stored in ECM memory can be cleared as well as checked by using SUZUKI scan tool or OBD generic scan tool. Before using scan tool, read its Operator's (Instruction) Manual carefully to have good understanding as to what functions are available and how to use it.

  It is indistinguishable which module turns on MIL because not only ECM but also TCM turns on MIL. Therefore, check both ECM and TCM for DTC when MIL lights on.

  When checking ECM for DTC, keep in mind that DTC is displayed on the scan tool as follows depending on the scan tool used.
  - SUZUKI scan tool displays DTC detected by ECM.
  - OBD-II generic scan tool displays DTC detected by each of ECM and TCM simultaneously.
- Priorities for diagnosing troubles

  If two or more diagnostic trouble codes (DTCs) are stored, proceed to the flow table of the DTC which has detected earliest in the order and follow the instruction in that table.

  If no instructions are given, troubleshoot diagnostic trouble codes according to the following priorities.
  - Diagnostic trouble codes (DTCs) other than DTC P0171/P0172 (Fuel system too lean/too rich), DTC P0300/P0301/P0302/P0303/P0304 (Misfire detected) and DTC P0401/P0402 (EGR flow malfunction)
  - DTC P0171/P0172 (Fuel system too lean/too rich) and DTC P0401/P0402 (EGR flow malfunction)
  - DTC P0300/P0301/P0302/P0303/P0304 (Misfire detected)
- Be sure to read "Precautions for Electrical Circuit Service" in Section 0A before inspection and observe what is written there.
- ECM Replacement

  When substituting a known-good ECM, check for the following conditions. Neglecting this check may cause damage to a known-good ECM.
  - Resistance value of all relays, actuators is as specified respectively.
  - MAP sensor and TP sensor are in good condition and none of power circuits of these sensors is shorted to ground.
- Communication of ECUs, ECM and TCM, is established by CAN (Computer Area Network).

  Therefore, handle CAN communication line with care referring to "Precautions" described in Section 0A.

DTC Table

DTC NO.	DETECTING ITEM	DETECTING CONDITION (DTC will set when detecting:)	MIL
P0010	Camshaft position actuator circuit	Actual valve timing fails to become close to target advance level of each function although advance control function or retarding control function is at work.	2 driving cycles
P0011	Camshaft position - timing over-advanced or system performance	Actual valve of advanced valve timing does not reach target value, or valve timing is advanced although ECM command is most retarding.	1 driving cycle
P0012	Camshaft position - timing over-retarded		1 driving cycle
P0031	HO2S heater control circuit low (Sensor–1)	Heater current is lees than specification while heater ON.	2 driving cycles
P0032	HO2S heater control circuit high (Sensor–1)	Heater current is more than specification while heater ON.	2 driving cycles
P0037	HO2S heater control circuit low (Sensor–2)	Heater current is lees than specification while heater ON.	2 driving cycles
P0038	HO2S heater control circuit high (Sensor–2)	Heater current is more than specification while heater ON.	2 driving cycles
P0101	Mass air flow circuit range/ performance	Poor performance of MAF sensor	2 driving cycles
P0102	Mass air flow circuit low input	Low voltage	1 driving cycle
P0103	Mass air flow circuit high input	High voltage	
P0107	Manifold absolute pressure low input	Low voltage (or manifold absolute pressure sensor circuit open or shorted to ground)	1 driving cycle
P0108	Manifold absolute pressure high input	High voltage (or manifold absolute pressure sensor circuit shorted to power circuit)	1 driving cycle
P0112	Intake air temperature sensor circuit low	High temperature – low voltage (or IAT sensor circuit shorted to ground)	1 driving cycle
P0113	Intake air temperature sensor circuit high	Low temperature – high voltage (or IAT sensor circuit open)	
P0117	Engine coolant temperature sensor circuit low	High temperature – low voltage (or ECT sensor circuit shorted to ground)	1 driving cycle
P0118	Engine coolant temperature sensor circuit high	Low temperature – high voltage (or ECT sensor circuit open)	
P0121	Throttle position circuit range/performance	Poor performance of TP sensor	2 driving cycles
P0122	Throttle position circuit low	Low voltage (or TP sensor circuit shorted to ground)	1 driving cycle
P0123	Throttle position circuit high	High voltage (or TP sensor circuit open)	

DTC NO.	DETECTING ITEM	DETECTING CONDITION (DTC will set when detecting:)	MIL
P0131	O2 sensor (HO2S) circuit low voltage (Sensor–1)	Min. output voltage of HO2S–1 higher than specification	2 driving cycles
P0132	O2 sensor (HO2S) circuit high voltage (Sensor–1)	Max. output voltage of HO2S–1 is lower or higher than specification	
P0133	O2 sensor (HO2S) circuit slow response (Sensor–1)	Response time of HO2S–1 output voltage between rich and lean is longer than specification.	
P0134	O2 sensor (HO2S) circuit no activity detected (Sensor–1)	Output voltage of HO2S–1 fails to go above specification. (or HO2S–1 circuit open or short)	2 driving cycles
P0137	O2 sensor (HO2S) circuit low voltage (Sensor–2)	Min. output voltage of HO2S–2 is higher than specification	2 driving cycles
P0138	O2 sensor (HO2S) circuit high voltage (Sensor–2)	Max. output voltage of HO2S–2 is lower or higher than specification	2 driving cycles
P0171	System too lean	Total fuel trim is larger than specification for specified time or longer. (Fuel trim toward rich side is large.)	2 driving cycles
P0172	System too rich	Total fuel trim is smaller than specification for specified time or longer. (Fuel trim toward lean side is large.)	2 driving cycles
P0300	Random misfire detected	Misfire of such level as to cause damage to three way catalyst.	*1 driving cycle
P0301 P0302 P0303 P0304	Cylinder 1 misfire detected Cylinder 2 misfire detected Cylinder 3 misfire detected Cylinder 4 misfire detected	Misfire of such level as to deteriorate emission but not to cause damage to three way catalyst.	2 driving cycles
P0327	Knock sensor circuit low	Knock sensor circuit shorted to ground (low voltage)	1 driving cycle
P0328	Knock sensor circuit high	Knock sensor circuit open (high voltage)	1 driving cycle
P0335	Crankshaft position sensor circuit	No signal during engine running	1 driving cycle
P0340	Camshaft position sensor circuit	No reference signal during engine cranking or pulse number of position signal is out of specification.	
P0401	Exhaust gas recirculation flow insufficient detected	Insufficient EGR flow	2 driving cycles
P0402	Exhaust gas recirculation flow excessive detected	Excessive EGR flow	2 driving cycles
P0403	Exhaust gas recirculation control circuit	Low voltage (or EGR valve stepping motor coil circuit open or shorted to ground)	1 driving cycle
P0420	Catalyst system efficiency below threshold	Output waveforms of HO2S–1 and HO2S–2 are similar.	2 driving cycles
P0443	Evaporative emission system purge control valve circuit	Monitor signal of EVAP canister purge valve is different from command signal (circuit open or shorted to ground)	2 driving cycles
P0462	Fuel level sensor circuit low	Low voltage	2 driving cycles
P0463	Fuel level sensor circuit high	High voltage	2 driving cycles

DTC NO.	DETECTING ITEM	DETECTING CONDITION (DTC will set when detecting:)	MIL
P0480	Fan 1 (Radiator cooling fan) control circuit	Radiator cooling fan relay terminal voltage is low when cooling temp. is lower than specification.	2 driving cycles
P0481	Fan 2 (A/C condenser fan) control circuit	Monitor signal of A/C condenser fan relay is different from command signal.	2 driving cycles
P0500	Vehicle speed sensor	No signal during fuel cut for specified time or longer	2 driving cycles
P0505	Idle air control system	Voltage is out of specification for longer than specified time	1 driving cycle
P0506	Idle air control system RPM lower than expected	Engine idle speed is lower than target speed out of specified value for longer than specified time	2 driving cycles
P0507	Idle air control system RPM higher than expected	Engine idle speed is higher than target speed out of specified value for longer than specified time	2 driving cycles
P0601	Internal control module memory check sum error	Data write error or check sum error	1 driving cycle
P0602	Control module programming error	Data programming error	1 driving cycle
P0616	Starter relay circuit low	Starter signal circuit open (low voltage)	2 driving cycles
P0617	Starter relay circuit high	Starter signal circuit shorted to power supply (high voltage)	2 driving cycles
P1510	ECM backup power supply malfunction	Backup power voltage is out of specification after starting engine.	1 driving cycle
P1601	CAN communication error	Transmitting or receiving error detected to ECM for specified time continuously.	1 driving cycles
*P1603	TCM trouble code detected	When ECM receives a trouble code from TCM, which indicates that some problem occurred in sensor circuits and its calculated values used for operations such as idle speed control, engine power control, and so on by TCM, this DTC is detected by ECM.	1 driving cycle
P2227	Barometric pressure circuit range/performance	Difference between barometric pressure sensor value and calculated barometric pressure value is larger than specification.	2 driving cycles
P2228	Barometric pressure circuit low	Barometric pressure sensor circuit shorted to ground.	1 driving cycle
P2229	Barometric pressure circuit high	Barometric pressure sensor circuit open	1 driving cycle
*P1620	ECU code not registered	Refer to “Diagnostic Trouble Code (DTC) Table” in Section 8G.	
*P1621	No ECU code transmitted from Immobilizer Control Module		
*P1622	Fault in ECM		
*P1623	ECU code not matched		

For A/t System (Only OBD-II Generic Scan Tool Is Displayed On Following DTC(s) At The Same Time)

DTC NO.	DETECTING ITEM	DETECTING CONDITION (DTC will set when detecting:)
P0705	Transmission Range Sensor Circuit Malfunction (P, R, N, D, L Input)	Refer to "Diagnostic Trouble Code (DTC) Table" in Section 7B.
P0707	Transmission Range Sensor Circuit Low	
P0712	Transmission Fluid Temperature Sensor "A" Circuit Low	
P0713	Transmission Fluid Temperature Sensor "A" Circuit High	
P0717	Input/Turbine Speed Sensor Circuit No Signal	
P0722	Output Speed Sensor Circuit No	
P0741	Torque Converter Clutch Circuit Performance or Stuck Off	
P0742	Torque Converter Clutch Circuit Stuck On	
P0751	Shift Solenoid "A" Performance or Stuck Off	
P0752	Shift Solenoid "A" Stuck On	
P0756	Shift Solenoid "B" Performance or Stuck Off	
P0757	Shift Solenoid "B" Stuck On	
P0785	Shift/Timing Solenoid	
P0962	Pressure Control Solenoid "A" Control Circuit Low	
P0963	Pressure Control Solenoid "A" COntrol Circuit High	
P0973	Shift Solenoid "A" Control Circuit Low	
P0974	Shift Solenoid "A" Control Circuit High	
P0976	Shift Solenoid "B" Control Circuit Low	
P0977	Shift Solenoid "B" Control Circuit High	
P1701	CAN communication problem – TCM	
P1702	Internal Control Module Memory Check Sum Error	
*P1703	CAN invalid data – TCM	
P2769	Torque Converter Clutch Circuit Low	
P2770	Torque Converter Clutch Circuit High	

NOTE:

- **1 driving cycle: MIL lights up when DTC is detected while 1 driving cycle.**
- **2 driving cycles: MIL lights up when the same DTC is detected also in the next driving cycle after DTC is detected and stored temporarily in the first driving cycle.**
- ***1 driving cycle:**
  MIL blinks or lights up. Refer to "DTC P0300/P0301/P0302/P0303/P0304: Random Misfire/Cylinder 1 Misfire/Cylinder 2 Misfire/Cylinder 3 Misfire/Cylinder 4 Misfire Detected" for details.
- **For "*" marked No. in DTC column, it is not indicated when generic scan tool is used.**

Scan Tool Data

As the data values given below are standard values estimated on the basis of values obtained from the normally operating vehicles by using a scan tool, use them as reference values. Even when the vehicle is in good condition, there may be cases where the checked value does not fall within each specified data range. Therefore, judgment as abnormal should not be made by checking with these data alone.
Also, conditions in the table below that can be checked by the scan tool are those detected by ECM and output from ECM as commands and there may be cases where the engine or actuator is not operating (in the condition) as indicated by the scan tool. Be sure to use the timing light to check the ignition timing.

NOTE:

- **With the generic scan tool, only star (∗) marked data in the table below can be read.**
- **When checking the data with the engine running at idle or racing, be sure to shift M/T gear to the neutral gear position and A/T gear to the "Park" position and pull the parking brake fully. Also, if nothing or "no load" is indicated, turn OFF A/C, all electric loads, P/S and all the other necessary switches.**

	SCAN TOOL DATA	VEHICLE CONDITION		NORMAL CONDITION/ REFERENCE VALUES
∗	COOLANT TEMP (ENGINE COOLANT TEMP.)	At specified idle speed after warming up		80 – 100°C, 176 – 212°F
∗	INTAKE AIR TEMP	At specified idle speed after warming up		–5°C (23°F) + environmental temp. to 40°C (104°F) + environmental temp.
∗	ENGINE SPEED	At idling with no load after warming up		Desired idle speed ±50 r/min
	INJ PULSE WIDTH (FUEL INJECTION PULSE WIDTH)	At specified idle speed with no load after warming up		2.0 – 4.0 msec.
		At 2500 r/min with no load after warming up		2.0 – 3.6 msec.
	TP SENSOR VOLT (THROTTLE POSITION SENSOR OUTPUT VOLTAGE)	Ignition switch ON/ warmed up engine stopped	Accelerator pedal released	0.5 – 1.0 V
			Accelerator pedal depressed fully	Less than 4.8 V
	DESIRED IDLE (DESIRED IDLE SPEED)	At idling with radiator cooling fan stopped and all electrical parts turned OFF after warming up, M/T at neutral		700 r/min
	IAC FLOW DUTY (IDLE AIR CONTROL FLOW DUTY)	At idling with no load after warming up		5 – 55%
∗	SHORT FT B1 (SHORT TERM FUEL TRIM)	At specified idle speed after warming up		– 20 – +20%
∗	LONG FT B1 (LONG TERM FUEL TRIM)	At specified idle speed after warming up		– 20 – +20%
∗	MAF (MASS AIR FLOW RATE)	At specified idle speed with no load after warming up		1.0 – 4.0 g/s 0.14 – 0.52 lb/min
		At 2500 r/min with no load after warming up		4.0 – 12.0 g/s 0.53 – 1.58 lb/min

	SCAN TOOL DATA	VEHICLE CONDITION		NORMAL CONDITION/ REFERENCE VALUES
*	CALC LOAD (CALCULATED LOAD VALUE)	At specified idle speed with no load after warming up		10 – 20%
		At 2500 r/min with no load after warming up		10 – 18%
*	THROTTLE POSITION (ABSOLUTE THROTTLE POSITION)	Ignition switch ON/ warmed up engine stopped	Accelerator pedal released	9 – 19%
			Accelerator pedal depressed fully	70 – 90%
*	O2S B1 S1 (HEATED OXYGEN SENSOR–1)	At specified idle speed after warming up		0 – 0.95 V
*	O2S B1 S2 (HEATED OXYGEN SENSOR–2)	When engine is running at 2000 r/min. for 3 min or longer after warming up.		0 – 0.95 V
	FUEL SYSTEM B1 (FUEL SYSTEM STATUS)	At specified idle speed after warming up		CLOSED (closed loop)
	TOTAL FUEL TRIM	At specified idle speed after warming up		– 35 – +35%
*	MAP (INTAKE MANIFOLD ABSOLUTE PRESSURE)	At specified idle speed with no load after warming up		24 – 38 kPa 180 – 285 mmHg
	BAROMETRIC PRES	–		Display the barometric pressure
	STEP EGR FLOW DUTY	At specified idle speed after warming up		0%
	FUEL CUT	When engine is at fuel cut condition		ON
		Other than fuel cut condition		OFF
	CLOSED THROTTLE POS (CLOSED THROTTLE POSITION)	Throttle valve at idle position		ON
		Throttle valve opens larger than idle position		OFF
	CANIST PRG DUTY (EVAP CANISTER PURGE FLOW DUTY)	At specified idle speed after warming up		0%
*	IGNITION ADVANCE (IGNITION TIMING ADVANCE FOR NO.1 CYLINDER)	At specified idle speed with no load after warming up		3 – 13° BTDC
	BATTERY VOLTAGE	Ignition switch ON/engine stop		10 – 14 V
	FUEL PUMP	Within 3 seconds after ignition switch ON or engine running		ON
		Engine stop at ignition switch ON		OFF
	ELECTRIC LOAD	Ignition switch ON/Headlight, small light, all turned OFF		OFF
		Ignition switch ON/Headlight, small light, turned ON		ON
	BRAKE SWITCH	Ignition switch ON	Brake pedal is released	OFF
			Brake pedal is depressed	ON
	RADIATOR FAN (RADIATOR FAN CONTROL RELAY)	Ignition switch ON	Engine coolant temp.: Lower than 95°C (203°F)	OFF
			Engine coolant temp.: 97.5°C (208°F) or higher	ON

	SCAN TOOL DATA	VEHICLE CONDITION		NORMAL CONDITION/ REFERENCE VALUES
	BLOWER FAN	Ignition switch ON	Blower fan switch: 2nd speed position or more	ON
			Blower fan switch: under 2nd speed position	OFF
	A/C SWITCH (if equipped with A/C)	Engine running after warming up, A/C not operating		OFF
		Engine running after warming up, A/C operating		ON
	A/C MAG CLUTCH (if equipped with A/C)	Engine running	A/C switch and blower motor switch turned ON	ON
			A/C switch and blower motor switch turned OFF	OFF
	A/C COND FAN (if equipped with A/C)	Engine running	Blower motor switch and A/C switch turned ON	ON
			Blower motor switch and/ or A/C switch turned OFF	OFF
	VVT GAP (TARGET-ACTUAL POSITION)	At specified idle speed after warming up		0 – 3°

Scan Tool Data Definitions

COOLANT TEMP (ENGINE COOLANT TEMPERATURE, °C, °F)
It is detected by engine coolant temp. sensor.

INTAKE AIR TEMP. (°C, °F)
It is detected by intake air temp. sensor.

ENGINE SPEED (rpm)
It is computed by reference pulses from the camshaft position sensor.

INJ PULSE WIDTH (FUEL INJECTION PULSE WIDTH, msec.)
This parameter indicates time of the injector drive (valve opening) pulse which is output from ECM (but injector drive time of NO.1 cylinder for multiport fuel injection).

TP SENSOR VOLT (THROTTLE POSITION SENSOR OUTPUT VOLTAGE, V)
The Throttle Position Sensor reading provides throttle valve opening information in the form of voltage.

DESIRED IDLE (DESIRED IDLE SPEED, rpm)
The Desired Idle Speed is an ECM internal parameter which indicates the ECM requested idle. If the engine is not running, this number is not valid.

IAC FLOW DUTY (IDLE AIR (SPEED) CONTROL DUTY, %)
This parameter indicates current flow time rate within a certain set cycle of IAC valve (valve opening rate) which controls the amount of bypass air (idle speed).

SHORT FT B1 (SHORT TERM FUEL TRIM, %)
Short term fuel trim value represents short term corrections to the air/fuel mixture computation. A value of 0 indicates no correction, a value greater than 0 means an enrichment correction, and a value less than 0 implies an enleanment correction.

LONG FT B1 (LONG TERM FUEL TRIM, %)
Long term fuel trim value represents long term corrections to the air/fuel mixture computation. A value of 0 indicates no correction, a value greater than 0 means an enrichment correction, and a value less than 0 means an enrichment correction, and a value less than 0 implies an enleanment correction.

MAF (MASS AIR FLOW RATE, g/s, lb/min)
It represents total mass of air entering intake manifold which is measured by mass air flow sensor.

CALC LOAD (CALCULATED LOAD VALUE, %)
Engine load displayed as a percentage of maximum possible load. Value is calculated mathematically using the formula: actual (current) intake air volume ÷ maximum possible intake air volume x 100%

THROTTLE POS (ABSOLUTE THROTTLE POSITION, %)
When throttle position sensor is fully closed position, throttle opening is indicated as 0% and 90 – 100% full open position.

O2S SENSOR B1 S1 (HEATED OXYGEN SENSOR–1, V)
It indicates output voltage of HO2S–1 installed on exhaust manifold (pre-catalyst).

O2S SENSOR B1 S2 (HEATED OXYGEN SENSOR–2, V)
It indicates output voltage of HO2S–2 installed on exhaust pipe (post-catalyst). It is used to detect catalyst deterioration.

FUEL SYSTEM (FUEL SYSTEM STATUS)
Air/fuel ratio feedback loop status displayed as one of the followings.
OPEN: Open loop-has not yet satisfied conditions to go closed loop.
CLOSED: Closed loop-using oxygen sensor(s) as feedback for fuel control.
OPEN-DRIVE COND: Open loop due to driving conditions (Power enrichment, etc.).
OPEN SYS FAULT: Open loop due to detected system fault.
CLOSED-ONE O2S: Closed loop, but fault with at least one oxygen sensor-may be using single oxygen sensor for fuel control.

TOTAL FUEL TRIM B1 (%)
The value of Total Fuel Trim is obtained by calculating based on values of short Term Fuel Trim and Long Term Fuel Trim. This value indicates how much correction is necessary to keep the air/fuel mixture stoichiometrical.

MAP (MANIFOLD ABSOLUTE PRESSURE, mmHg, kPa)
This value indicates how much correction is necessary to keep the air/fuel mixture stoichiometrical.
It is detected by manifold absolute pressure sensor.

BAROMETRIC PRESS (kPa, inHg)
This parameter represents a measurement of barometric air pressure and is used for altitude correction of the fuel injection quantity and IAC valve control.

STEP EGR FLOW DUTY (%)
This parameter indicates opening rate of EGR valve which controls the amount of EGR flow.

FUEL CUT (ON/OFF)
ON: Fuel being cut (output signal to injector is stopped)
OFF: Fuel not being cut

CLOSED THROTTLE POSITION (ON/OFF)
This parameter will read ON when throttle valve is fully closed, or OFF when the throttle is not fully closed.

CANIST PURGE DUTY (EVAP CANISTER PURGE FLOW DUTY, %)
This parameter indicates valve ON (valve open) time rate within a certain set cycle of EVAP canister purge valve which controls the amount of EVAP purge.

IGNITION ADVANCE (IGNITION TIMING ADVANCE FOR NO.1 CYLINDER, °)
Ignition timing of NO.1 cylinder is commanded by ECM. The actual ignition timing should be checked by using the timing light.

BATTERY VOLTAGE (V)
This parameter indicates battery positive voltage inputted from main relay to ECM.

FUEL PUMP (ON/OFF)
ON is displayed when the ECM activates the fuel pump via the fuel pump relay switch.

ELECTRIC LOAD (ON/OFF)
ON: Headlight or small light ON signal inputted.
OFF: Above electric loads all turned OFF.

BRAKE SW (ON/OFF)
This parameter indicates the state of the brake switch.

RADIATOR FAN (RADIATOR FAN CONTROL RELAY, ON/OFF)
ON: Command for radiator fan control relay operation being output.
OFF: Command for relay operation not being output.

BLOWER FAN (ON/OFF)
This parameter indicates the state of the blower fan motor switch.

A/C SWITCH (ON/OFF)
ON: Command for A/C operation being output from ECM to A/C amplifier.
OFF: Command for A/C operation not being output.

A/C MAG SWITCH (A/C COMPRESSOR RELAY, ON/OFF)
This parameter indicates the state of the A/C switch.

A/C COND FAN (ON/OFF)
This parameter indicates the state of the A/C Condenser Fan control signal.

VVT GAP [TARGET-ACTUAL POSITION] (°)
It is calculated using the formula: target valve timing advance – actual valve timing advance.

Inspection of ECM and Its Circuits

ECM and its circuits can be checked at ECM wiring couplers by measuring voltage, pulse signal and resistance.

CAUTION:
ECM cannot be checked by itself. It is strictly prohibited to connect voltmeter or ohmmeter to ECM with coupler disconnected from it.

Voltage Check

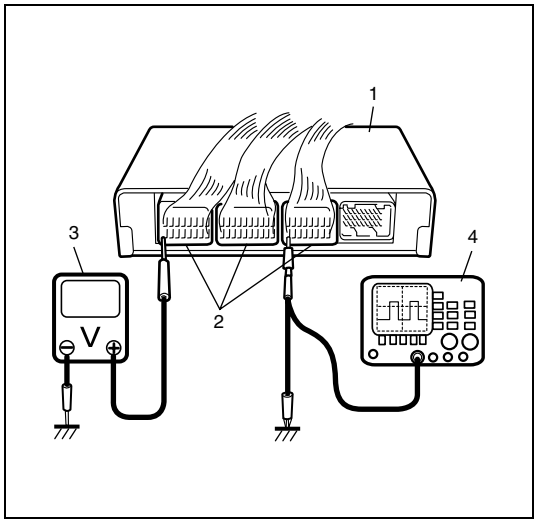

1) Remove ECM (1) from vehicle body referring to "Engine Control Module (ECM) Removal and Installation" in Section 6E1.
2) Check voltage and/or pulse signal at each terminal of couplers (2) connected, using voltmeter (3) and oscilloscope (4).

NOTE:

- **As each terminal voltage is affected by the battery voltage, confirm that it is 11 V or more when ignition switch is turned ON.**
- **Voltage with asterisk(*) cannot be measured by voltmeter because it is pulse signal.**
  Check it with oscilloscope if necessary.

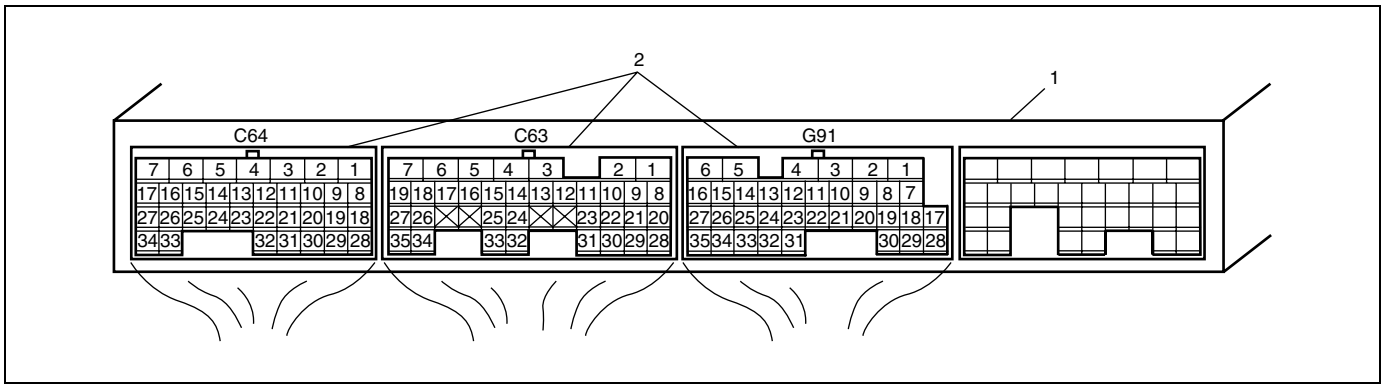

1. ECM
2. ECM couplers (Viewed from harness side)

TERMINAL NUMBER	WIRE COLOR	CIRCUIT	NORMAL VOLTAGE	CONDITION
C64-1	BLK/ORN	Ground for ECM	Below 0.3 V	Ignition switch turned ON
C64-2	BLK	Ground for ECM	Below 0.3 V	Ignition switch turned ON
C64-3	RED/BLU	Heater output of heated oxygen sensor–2	10 – 14 V	Ignition switch turned ON
			0 – 1 V (Reference waveform No.1)	Engine running at idling after vehicle running over 30 km/h, 19ml/h for 5 min.
C64-4	BLK/WHT	Heater output of heated oxygen sensor–1	10 – 14 V	Ignition switch turned ON
			*0 – 2 V ↑↓ 13.5 –14.8 V (Reference waveform No.2 and No.3)	Engine running at idling with after warming up. (Output signal is active low duty pulse. Duty ratio varies depending on engine condition.)
C64-5	GRN/YEL	A/C condenser fan motor relay No.2 output (if equipped)	10 – 14 V	Engine running, engine coolant temperature more than 113°C, 235°F or for about 7 sec. after A/C operated (A/C request signal inputted low voltage).
			0 – 1 V	Engine running, engine coolant temperature under than 110°C, 230°F and after about 7 sec. after A/C operated (A/C request signal inputted low voltage) or A/C OFF.
C64-6	PNK	Fuel cost output	*0 – 2 V ↑↓ 13.5 – 14.8 V	Engine running at idling with after warming up. (Output signal is 3.33 Hz duty pulse. Duty ratio varies depending on vehicle condition.)
C64-7	–	–	–	–
C64-8	RED/YEL	IAC valve output (stepper motor coil 3)	0 – 1 V	Ignition switch turned ON
			*0 – 2 V ↑↓ 8 – 14 V (Reference waveform No.4)	Ignition switch is turned to ST (cranking) position. (Output signal is active low duty pulse. Pulse generated times depending on vehicle condition)
C64-9	RED/BLU	IAC valve output (stepper motor coil 2)	8 – 14 V	Ignition switch turned ON
			*0 – 2 V ↑↓ 8 – 14 V (Reference waveform No.4)	Ignition switch is turned to ST (cranking) position. (Output signal is active low duty pulse. Pulse generated times depending on vehicle condition)
C64-10	RED/WHT	IAC valve output (stepper motor coil 1)	0 – 1 V	Ignition switch turned ON
			*0 – 2 V ↑↓ 8 – 14 V (Reference waveform No.4)	Ignition switch is turned to ST (cranking) position. (Output signal is active low duty pulse. Pulse generated times depending on vehicle condition)

TERMINAL NUMBER	WIRE COLOR	CIRCUIT	NORMAL VOLTAGE	CONDITION
C64-11	PNK/BLK	A/C compressor relay output (if equipped)	10 – 14 V	Engine running, A/C request signal high input
			0 – 1 V	Engine running, A/C request signal low input
C64-12	PNK	A/C condenser fan motor relay No.1 output (if equipped)	10 – 14 V	Ignition switch turned ON, coolant temperature under 113°C, 235°F or A/C request signal high input
			0 – 1 V	Ignition switch turned ON, coolant temperature more than 110°C, 230°F or A/C request signal low input
C64-13	BLU/BLK	EVAP canister purge valve output	10 – 14 V	Ignition switch turned ON with engine stop
			*0 – 0.6 V ↑↓ 10 – 14 V (Reference waveform No.25)	Engine running and vehicle running over 40 km/h, 25 ml/h (Output signal is 10 Hz duty pulse. Duty ratio varies depending on vehicle condition.)
C64-14	GRN	Fuel pump relay output	0 – 2.5 V	For 3 sec. from the time is ignition switch turned to ON or while engine is running
			10 – 14 V	On and after 3 sec. from the time is ignition switch turned to ON or while engine is stop
C64-15	BRN/WHT	Main power supply relay output	10 – 14 V	Ignition switch is turned OFF
			0 – 2 V	Ignition switch is turned ON
C64-16	WHT/RED	EGR valve (stepper motor coil 3) output	10 – 14 V	Ignition switch is turned ON
			*0 – 2 V ↑↓ 8 – 14 V (Reference waveform No.5)	Ignition switch is turned to ST (cranking) position. (Output signal is active low duty pulse. Pulse generated times depending on vehicle condition)
C64-17	GRN/RED	EGR valve (stepper motor coil 1) output	0 – 2 V	Ignition switch turned ON
			*0 – 2 V ↑↓ 8 – 14 V (Reference waveform No.5)	Ignition switch is turned to ST (cranking) position. (Output signal is active low duty pulse. Pulse generated times depending on vehicle condition)
C64-18	–	–	–	–
C64-19	–	–	–	–
C64-20	–	–	–	–
C64-21	–	–	–	–
C64-22	–	–	–	–
C64-23	–	–	–	–
C64-24	–	–	–	–
C64-25	–	–	–	–
C64-26	–	–	–	–
C64-27	–	–	–	–

TERMINAL NUMBER	WIRE COLOR	CIRCUIT	NORMAL VOLTAGE	CONDITION
C64-28	RED/BLK	IAC valve output (stepper motor coil 4)	8 – 14 V	Ignition switch turned ON
			*0 – 2 V ↑↓ 8 – 14 V (Reference waveform No.4)	Ignition switch is turned to ST (cranking) position. (Output signal is active low duty pulse. Pulse generated times depending vehicle condition)
C64-29	–	–	–	–
C64-30	–	–	–	–
C64-31	GRN/WHT	Ignition coil No.2 and No.3 output	0 – 0.6 V	Ignition switch turned ON
			*0 – 0.6 V ↑↓ 2 – 5 V (Reference waveform No.6)	Engine running (Output signal is active high pulse. Pulse frequency varies depending on engine speed.)
C64-32	GRN/YEL	Ignition coil No.1 and No.4 output	0 – 0.6 V	Ignition switch turned ON
			*0 – 0.6 V ↑↓ 2 – 5 V (Reference waveform No.7)	Engine running (Output signal is active high pulse. Pulse frequency varies depending on engine speed.)
C64-33	BRN/YEL	EGR valve (stepper motor coil 4) output	0 – 2 V	Ignition switch turned ON
			*0 – 2 V ↑↓ 8 – 14 V (Reference waveform No.5)	Ignition switch is turned to ST (cranking) position. (Output signal is active low duty pulse. Pulse generated times depending on vehicle condition)
C64-34	GRN/ORN	EGR valve (stepper motor coil 2) output	10 – 14 V	Ignition switch turned ON
			*0 – 2 V ↑↓ 8 – 14 V (Reference waveform No.5)	Ignition switch is turned to ST (cranking) position. (Output signal is active low duty pulse. Pulse generated times depending on vehicle condition)
C63-1	BLK/ORN	Ground for ECM	Below 0.3 V	Ignition switch turned ON
C63-2	BLU	Oil control valve output	*0 – 0.6 V ↑↓ 13 – 14 V (Reference waveform No.8 and No.9)	Ignition switch turned ON
				While engine running. (Output signal is active low duty pulse. Duty ratio varies depending on vehicle condition)
C63-3	–	–	–	–
C63-4	BLU/ORN	Fuel injector No.4 output	10 – 14 V	Ignition switch turned ON
			*0 – 0.6 V ↑↓ 10 – 14 V (Reference waveform No.10 and No.11)	Engine running (Output signal is active low pulse. Pulse frequency varies depending on engine speed.)

TERMINAL NUMBER	WIRE COLOR	CIRCUIT	NORMAL VOLTAGE	CONDITION
C63-5	BLU/RED	Fuel injector No.3 output	10 – 14 V	Ignition switch turned ON
			*0 – 0.6 V ↑↓ 10 – 14 V (Reference waveform No.10 and No.12)	Engine running (Output signal is active low pulse. Pulse frequency varies depending on engine speed.)
C63-6	BLU/WHT	Fuel injector No.2 output	10 – 14 V	Ignition switch turned ON
			*0 – 0.6 V ↑↓ 10 – 14 V (Reference waveform No.10 and No.13)	Engine running (Output signal is active low pulse. Pulse frequency varies depending on engine speed.)
C63-7	BLU/YEL	Fuel injector No.1 output	10 – 14 V	Ignition switch turned ON
			*0 – 0.6 V ↑↓ 10 – 14 V (Reference waveform No.10 and No.14)	Engine running (Output signal is active low pulse. Pulse frequency varies depending on engine speed.)
C63-8	GRY/RED	Output of 5 V power source for throttle position (TP) sensor	4.5 – 5.5 V	Ignition switch turned ON
C63-9	RED	Knock sensor signal	*2 – 3 V (Reference waveform No.15 and No.16)	Ignition switch turned ON
				Engine running at idling with after warming up
C63-10	RED/YEL	Reference (classified cylinder) signal for CMP sensor	*0 – 0.6 V ↑↓ 4 – 5 V (Reference waveform No.17)	Engine running at idling with after warming up (Sensor signal is pulse. Pulse frequency varies depending on engine speed.) (6 pulses are generated par 1camshaft revolution)
C63-11	WHT	Oxygen signal of heated oxygen sensor–1	0.5 – 1.5 V	Ignition switch turned ON
			*Deflects between over 0.5 V and under 0.45 V (Reference waveform No.2 and No.3)	While engine running at 2,000 r/min. for 1min. or longer after warmed up
C63-12	–	–	–	–
C63-13	–	–	–	–
C63-14	PNK/BLK	Mass air flow (MAF) sensor signal	0.5 – 1.5 V	Ignition switch turned ON and engine stops
			1.3 – 1.8 V (Reference waveform No.18)	When engine running at specified idle speed after warming up

TERMINAL NUMBER	WIRE COLOR	CIRCUIT	NORMAL VOLTAGE	CONDITION
C63-15	RED/WHT	Manifold absolute pressure (MAP) sensor signal	About 4 V (Reference waveform No.19)	Ignition switch turned ON with barometric pressure at 100kPa, 760mmHg
			0.4 – 1.8 V (Reference waveform No.20)	While specified idle speed after warming up with barometric pressure at 100kPa, 760mmHg
C63-16	LT GRN	Engine coolant temp. (ECT) sensor signal	3.3 – 3.6 V	Ignition switch turned ON, ECT at 0°C, 32°F
			1.1 – 1.5 V	Ignition switch turned ON, ECT at 50°C, 122°F
			0.3 – 0.45 V	Ignition switch turned ON, ECT at 100°C, 212°F
C63-17	LT GRN/ BLK	Intake air temperature (IAT) sensor signal	3.3 – 3.6 V	Ignition switch turned ON, IAT at 0°C, 32°F
			1.6 – 1.9 V	Ignition switch turned ON, IAT at 40°C, 104°F
			0.6 – 0.8 V	Ignition switch turned ON, IAT at 80°C, 176°F
C63-18	–	–	–	–
C63-19	YEL	Vehicle speed sensor signal	*0 – 1 V ↑↓ 10 – 14 V (Reference waveform No.21)	Vehicle running. (Sensor signal is pulse. Pulse frequency varies depending on vehicle speed. (8190 pulses are generated par 60 km/h, 37.5 ml/h)
C63-20	–	–	–	–
C63-21	–	–	–	–
C63-22	–	–	–	–
C63-23	–	–	–	–
C63-24	–	–	–	–
C63-25	–	–	–	–
C63-26	–	–	–	–
C63-27	–	–	–	–
C63-28	ORN	Ground for sensors	Below 0.3 V	Ignition switch turned ON
C63-29	–	–	–	–
C63-30	PNK	CKP sensor signal	0 – 1 V	Ignition switch turned ON
			*4.4 – 4.6 V ↑↓ 0.1 – 0.3 V (Reference waveform No.17)	Engine running at idling with after warming up. (Sensor signal is pulse. Pulse frequency varies depending on engine speed.) (31(34–4) pulses are generated par 1crankshaft revolution)
C63-31	GRN/YEL	Ground of ECM for shield wire	Below 0.3 V	Ignition switch turned ON
C63-32	–	–	–	–

TERMINAL NUMBER	WIRE COLOR	CIRCUIT	NORMAL VOLTAGE	CONDITION
C63-33	BRN	Oxygen signal of heated oxygen sensor–2	0.5 – 1.5 V	Ignition switch turned ON
			*Deflects between over 0.5 V and under 0.45 V (Reference waveform No.1)	While engine running at 2,000 r/min. for 1min. or longer after vehicle running over 30 km/h, 19 ml/h
C63-34	GRY/BLU	Throttle position (TP) sensor signal	0.5 – 1.0 V	Ignition switch turned ON and throttle valve at idle position with warmed engine
			3.4 – 4.7 V	Ignition switch turned ON and throttle valve at full open position
C63-35	BLK/YEL	Starting motor signal	0 – 1 V	Ignition switch turned ON
			6 – 14 V	While engine cranking
G91-1	PPL/WHT	MIL (Malfunction indicator lamp) output	0 – 2.5 V	Ignition switch turned ON with engine stop
			10 – 14 V	Engine running
G91-2	LT GRN/ BLK	Immobilizer indicator lamp output (if equipped)	10 – 14 V	While engine running
			0 – 1 V	Ignition switch turned ON with engine stop
G91-3	–	–	–	–
G91-4	BRN	Radiator fan motor relay output	10 – 14 V	Ignition switch turned ON, engine coolant temperature under 95°C, 203°F
			0 – 1 V	Ignition switch turned ON, engine coolant temperature more than 97.5°C, 207.5°F
G91-5	BLK/RED	Main power supply	10 – 14 V	Ignition switch turned ON
G91-6	BLK/RED	Main power supply	10 – 14 V	Ignition switch turned ON
G91-7	WHT	CAN communication line (Low)	*2.5 – 3.6 V ↑↓ 1.6 – 2.5 V (Reference waveform No.26)	Ignition switch turned ON with engine stop. (CAN communication line signal is pulse. Pulse signal is displayed with a regular frequency varies depending on engine condition.)
G91-8	RED	CAN communication line (High)		
G91-9	GRN/WHT	Electric load signal for stop lamp	0 – 1 V	Ignition switch turned ON, stop lamp not lighted up
			10 – 14 V	Ignition switch turned ON, stop lamp lighted up
G91-10	YEL	Serial communication line of data link connector 5 V	4 – 6 V	Ignition switch turned ON
G91-11	BLU	Serial communication line of data link connector 12 V	10 – 14 V	Ignition switch turned ON

TERMINAL NUMBER	WIRE COLOR	CIRCUIT	NORMAL VOLTAGE	CONDITION
G91-12	BRN	Engine revolution signal output for tachometer	0 – 0.8 V	Ignition switch turned ON with engine stop
			*0 – 1 V ↑↓ 8 – 14 V (Reference waveform No.22 and No.23)	While engine running. (Output signal is pulse. Pulse frequency varies depending on engine speed.) (2 pulses are generated par 1crankshaft revolution.) (3000 r/min = 100 Hz)
G91-13	YEL	Electric load signal for heater blower motor	10 – 14 V	Ignition switch turned ON, blower fan selector selected at OFF
			0 – 1 V	Ignition switch turned ON, blower fan selector selected at 2nd speed position or more
G91-14	YEL/RED	Fuel level sensor signal	0 – 6 V	Ignition switch turned ON Voltage depends on fuel level
G91-15	WHT/BLK	A/C evaporator outlet air temp. sensor signal (if equipped)	3.3 – 3.8 V	Ignition switch turned ON at A/C evaporator inlet air temperature 0°C (32°F)
			2.5 – 2.9 V	Ignition switch turned ON at A/C evaporator inlet air temperature 15°C (59°F)
			1.9 – 2.3 V	Ignition switch turned ON at A/C evaporator inlet air temperature 25°C (77°F)
G91-16	WHT/RED	Power source for ECM internal memory	10 – 14 V	Ignition switch turned ON and turned OFF
G91-17	–	–	–	–
G91-18	–	–	–	–
G91-19	–	–	–	–
G91-20	–	–	–	–
G91-21	–	–	–	–
G91-22	–	–	–	–
G91-23	–	–	–	–
G91-24	–	–	–	–
G91-25	–	–	–	–
G91-26	–	–	–	–
G91-27	–	–	–	–
G91-28	BLK/WHT	Ignition switch signal	0 – 1 V	Ignition switch turned OFF
			10 – 14 V	Ignition switch turned ON
G91-29	–	–	–	–
G91-30	YEL/GRN	A/C request signal (if equipped)	10 – 14 V (High input)	Ignition switch turned ON, blower fan selector selected OFF position or A/C switch turned OFF or A/C evaporator temp. less than 2.5°C, 36.5°F
			0 – 1 V (Low input)	Ignition switch turned ON, blower fan selector selected other than OFF position and A/C switch turned ON with A/C evaporator temp. more than 4°C, 39.2°F

TERMINAL NUMBER	WIRE COLOR	CIRCUIT	NORMAL VOLTAGE	CONDITION
G91-31	PPL	Vehicle speed sensor signal for speedometer	*0 – 1 V ↑↓ 10 – 14 V (Reference waveform No.21)	Vehicle running. (Sensor signal is pulse. Pulse frequency varies depending on vehicle speed.) (8190 pulses/sec. are generated par 60 km/h, 37.5 ml/h)
G91-32	GRY	ECT sensor signal for combination meter	*0 – 0.6 V ↑↓ 13 – 14 V (Reference waveform No.24)	Ignition switch turned ON (Output signal is 5 Hz active low duty pulse. Duty ratio varies depending on ECT.) ECT –30°C = 10% ON duty ECT 130°C = 90% ON duty
G91-33	RED/YEL	Electric load signal for clearance lamp	0 – 1 V	Ignition switch turned ON, clearance lamp not lighted up
			10 – 14 V	Ignition switch turned ON, clearance lamp lighted up
G91-34	–	–	–	–
G91-35	ORN	Ground for A/C evaporator outlet air temp. sensor (if equipped)	Below 0.3 V	Ignition switch turned ON

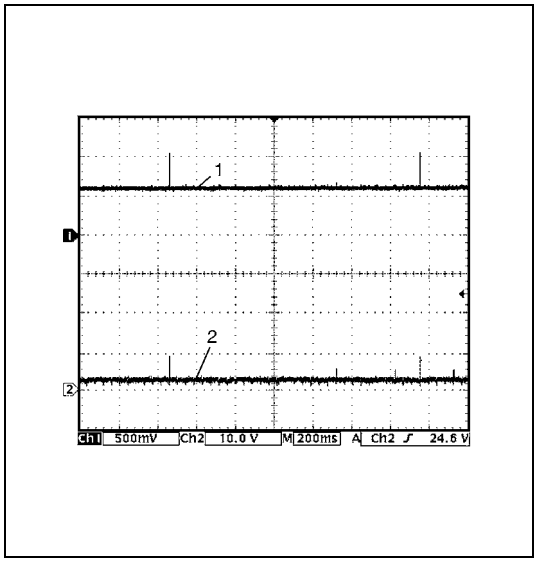

1. Reference waveform No.1

Heated oxygen sensor–2 heater signal at engine idling

Measurement terminal	CH1: C63-33 to C64-1 CH2: C64-3 to C64-1
Oscilloscope setting	CH1: 500 mV/DIV, CH2: 10 V/DIV TIME: 200 ms/DIV
Measurement condition	• After warmed up to normal operating temperature • Drive vehicle at 60 km/h (37 mil/h) for 10 min. • Engine at specified idle speed

1. Heated oxygen sensor–2 signal
2. Heated oxygen sensor–2 heater signal

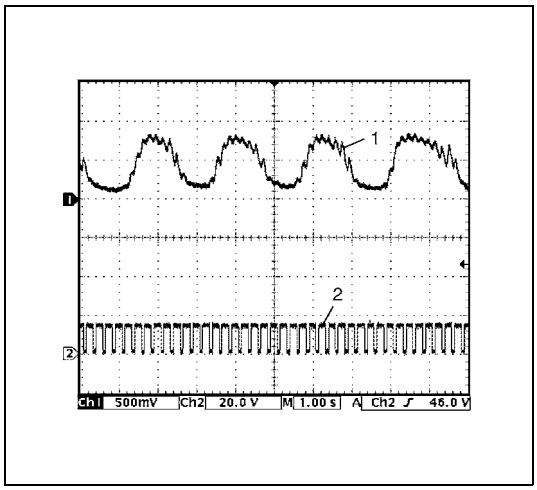

2. Reference waveform No.2

Heated oxygen sensor–1 signal at engine idling

Measurement terminal	CH1: C63-11 to C64-1 CH2: C64-4 to C64-1
Oscilloscope setting	CH1: 500 mV/DIV, CH2: 20 V/DIV TIME: 1 s/DIV
Measurement condition	• After warmed up to normal operating temperature • Engine at specified idle speed

1. Heated oxygen sensor–1 signal
2. Heated oxygen sensor–1 heater signal

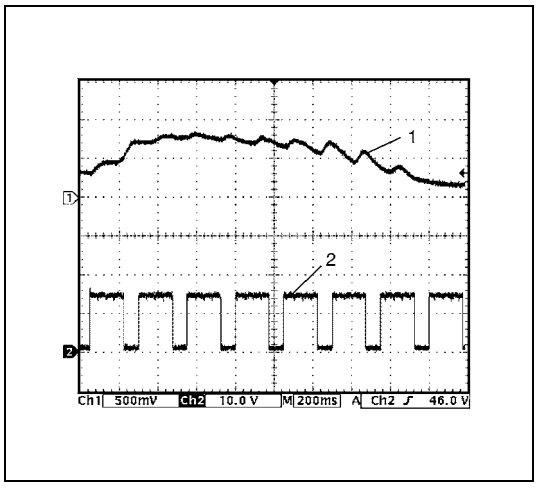

3. Reference waveform No.3

Heated oxygen sensor–1 heater signal at engine idling

Measurement terminal	CH1: C63-11 to C64-1 CH2: C64-4 to C64-1
Oscilloscope setting	CH1: 500 mV/DIV, CH2: 10 V/DIV TIME: 200 ms/DIV
Measurement condition	• After warmed up to normal operating temperature • Engine at specified idle speed

1. Heated oxygen sensor–1 signal
2. Heated oxygen sensor–1 heater signal

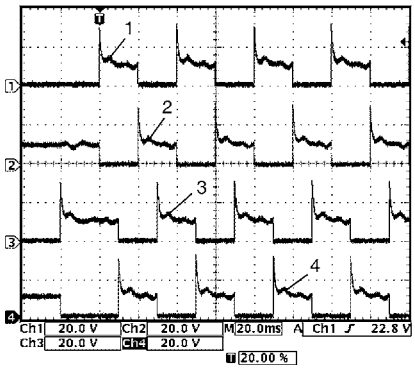

4. Reference waveform No.4

IAC valve signal

Measurement terminal	CH1: C64-10 to C64-1 CH2: C64-9 to C64-1 CH3: C64-8 to C64-1 CH4: C64-28 to C64-1
Oscilloscope setting	CH1: 20 V/DIV, CH2: 20 V/DIV CH3: 20 V/DIV, CH4: 20 V/DIV TIME: 20 ms/DIV
Measurement condition	Ignition switch turned ON from ST (cranking) position

1. IAC valve stepper motor coil 1 signal
2. IAC valve stepper motor coil 2 signal
3. IAC valve stepper motor coil 3 signal
4. IAC valve stepper motor coil 4 signal

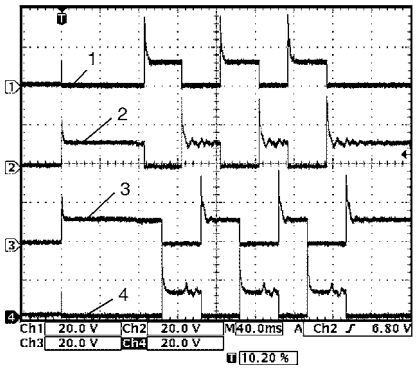

5. Reference waveform No.5

EGR valve signal

Measurement terminal	CH1: C64-17 to C64-1 CH2: C64-34 to C64-1 CH3: C64-16 to C64-1 CH4: C64-33 to C64-1
Oscilloscope setting	CH1: 20 V/DIV, CH2: 20 V/DIV CH3: 20 V/DIV, CH4: 20 V/DIV TIME: 40 ms/DIV
Measurement condition	At the moment of the ignition switch in turned on

1. EGR valve stepper motor coil 1 signal
2. EGR valve stepper motor coil 2 signal
3. EGR valve stepper motor coil 3 signal
4. EGR valve stepper motor coil 4 signal

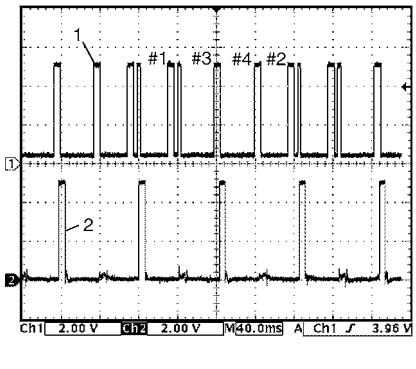

6. Reference waveform No.6

Ignition coil No.2 and No.3 signal at engine idling

Measurement terminal	CH1: C63-10 to C64-1 CH2: C64-31 to C64-1
Oscilloscope setting	CH1: 2 V/DIV, CH2: 2 V/DIV TIME: 40 ms/DIV
Measurement condition	• After warmed up to normal operating temperature • Engine at specified idle speed

1. Cylinder reference signal (CMP reference signal)
2. No.2 and No.3 ignition signal

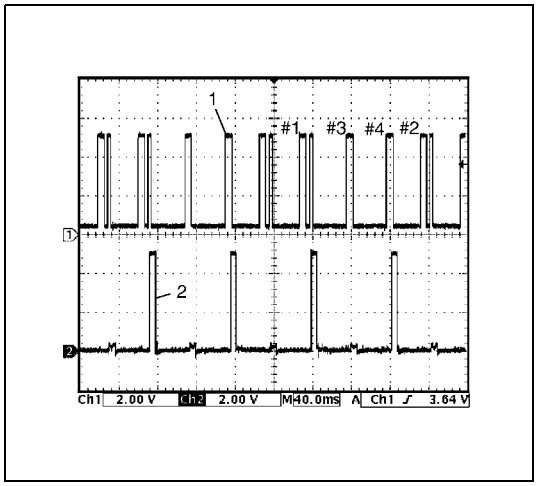

7. Reference waveform No.7

Ignition coil No.1 and No.4 signal at engine idling

Measurement terminal	CH1: C63-10 to C64-1 CH2: C64-32 to C64-1
Oscilloscope setting	CH1: 2 V/DIV, CH2: 2 V/DIV TIME: 40 ms/DIV
Measurement condition	• After warmed up to normal operating temperature • Engine at specified idle speed

1. Cylinder reference signal (CMP reference signal)
2. No.1 and No.4 ignition signal

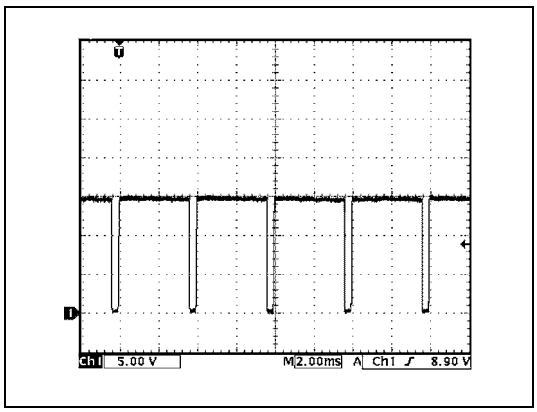

8. Reference waveform No.8

Oil control valve signal at engine idling

Measurement terminal	CH1: C63-2 to C64-1
Oscilloscope setting	CH1: 5 V/DIV TIME: 2 ms/DIV
Measurement condition	• After warmed up to normal operating temperature • Engine at specified idle speed

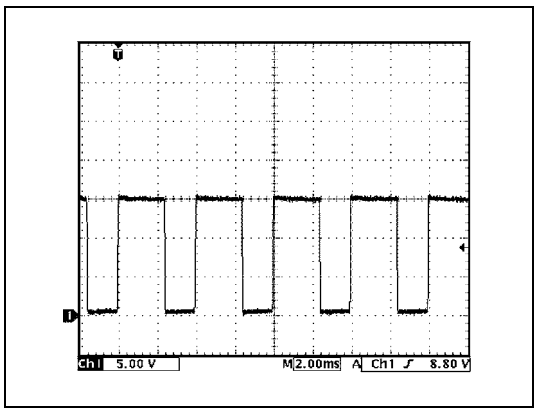

9. Reference waveform No.9

Oil control valve signal at engine racing

Measurement terminal	CH1: C63-2 to C64-1
Oscilloscope setting	CH1: 5 V/DIV TIME: 2 ms/DIV
Measurement condition	• After warmed up to normal operating temperature • Engine at racing

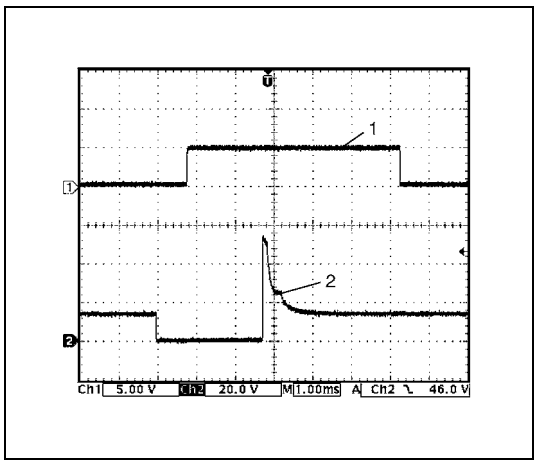

10. Reference waveform No.10

Fuel injector signal at engine idling

Measurement terminal	CH1: C63-10 to C64-1 CH2: C63-6 to C64-1
Oscilloscope setting	CH1: 5 V/DIV, CH2: 20 V/DIV TIME: 1 ms/DIV
Measurement condition	• After warmed up to normal operating temperature • Engine at specified idle speed

1. Cylinder reference signal (CMP reference signal)
2. Fuel injector signal

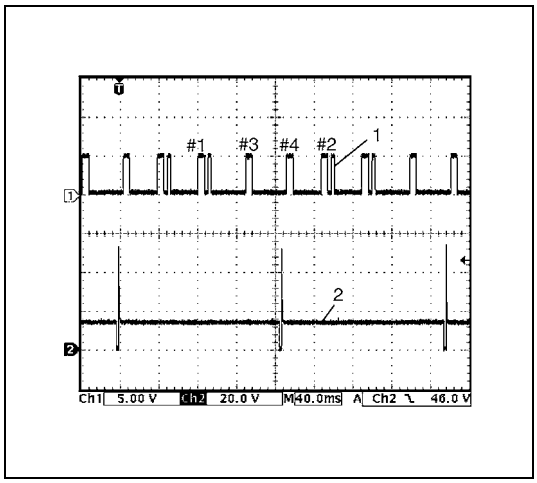

11. Reference waveform No.11

No.4 fuel injector signal at engine idling

Measurement terminal	CH1: C63-10 to C64-1 CH2: C63-4 to C64-1
Oscilloscope setting	CH1: 5 V/DIV, CH2: 20 V/DIV TIME: 40 ms/DIV
Measurement condition	• After warmed up to normal operating temperature • Engine at specified idle speed

1. Cylinder reference signal (CMP reference signal)
2. No.4 fuel injector signal\

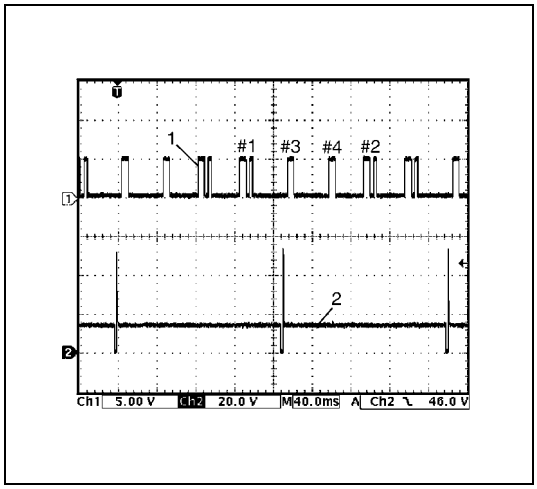

12. Reference waveform No.12

No.3 fuel injector signal at engine idling

Measurement terminal	CH1: C63-10 to C64-1 CH2: C63-5 to C64-1
Oscilloscope setting	CH1: 5 V/DIV, CH2: 20 V/DIV TIME: 40 ms/DIV
Measurement condition	• After warmed up to normal operating temperature • Engine at specified idle speed

1. Cylinder reference signal (CMP reference signal)
2. No.3 fuel injector signal

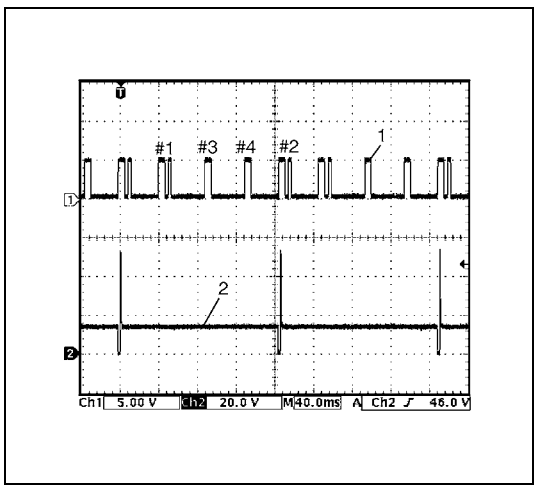

13. Reference waveform No.13

No.2 fuel injector signal at engine idling

Measurement terminal	CH1: C63-10 to C64-1 CH2: C63-6 to C64-1
Oscilloscope setting	CH1: 5 V/DIV, CH2: 20 V/DIV TIME: 40 ms/DIV
Measurement condition	• After warmed up to normal operating temperature • Engine at specified idle speed

1. Cylinder reference signal (CMP reference signal)
2. No.2 fuel injector signal

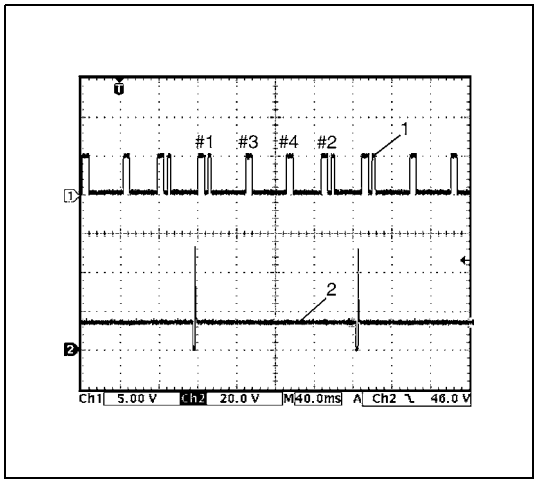

14. Reference waveform No.14

No.1 fuel injector signal at engine idling

Measurement terminal	CH1: C63-10 to C64-1 CH2: C63-7 to C64-1
Oscilloscope setting	CH1: 5 V/DIV, CH2: 20 V/DIV TIME: 40 ms/DIV
Measurement condition	• After warmed up to normal operating temperature • Engine at specified idle speed

1. Cylinder reference signal (CMP reference signal)
2. No.1 fuel injector signal

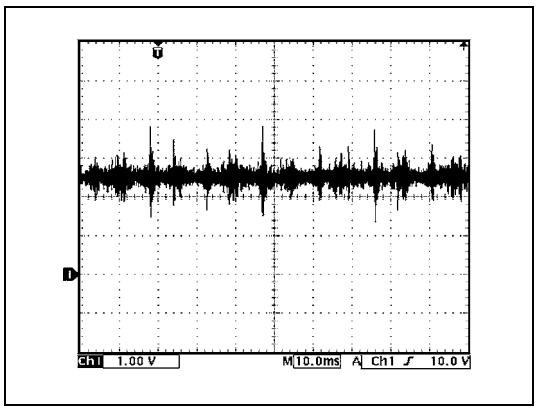

15. Reference waveform No.15

Knock sensor signal at engine speed 4000 r/min.

Measurement terminal	CH1: C63-9 to C64-1
Oscilloscope setting	CH1: 1 V/DIV TIME: 10 ms/DIV
Measurement condition	• After warmed up to normal operating temperature • Run engine at 4000 r/min.

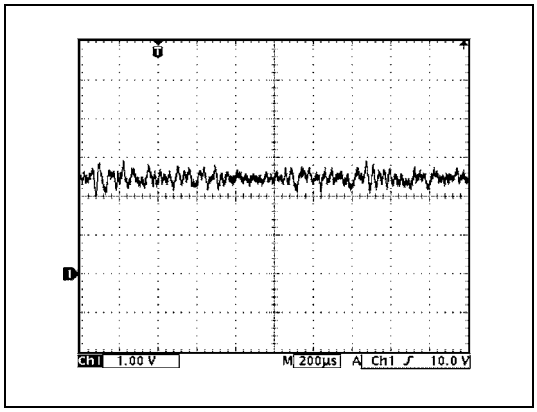

16. Reference waveform No.16

Knock sensor signal at engine speed 4000 r/min.

Measurement terminal	CH1: C63-9 to C64-1
Oscilloscope setting	CH1: 1 V/DIV TIME: 200 µs/DIV
Measurement condition	• After warmed up to normal operating temperature • Run engine at 4000 r/min.

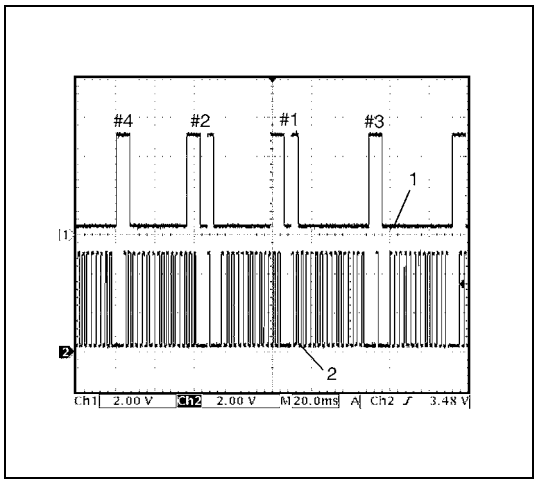

17. Reference waveform No.17

CMP sensor signal at engine idling

Measurement terminal	CH1: C63-10 to C64-1 CH2: C63-30 to C64-1
Oscilloscope setting	CH1: 2 V/DIV, CH2: 2 V/DIV TIME: 20 ms/DIV
Measurement condition	• After warmed up to normal operating temperature • Engine at specified idle speed

1. Cylinder reference signal (CMP reference signal)
2. CKP signal

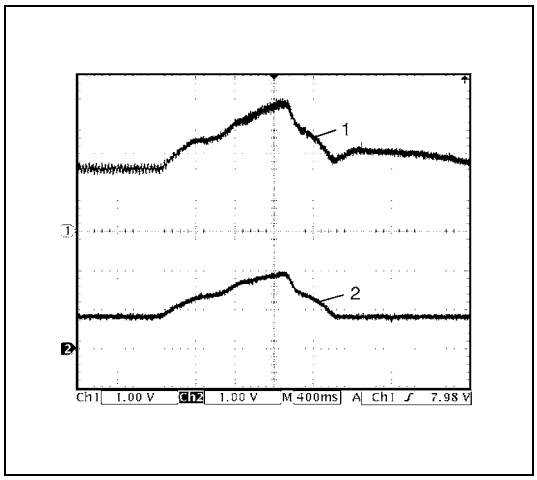

18. Reference waveform No.18

Mass air flow sensor signal at engine racing

Measurement terminal	CH1: C63-14 to C63-28 CH2: C63-34 to C63-28
Oscilloscope setting	CH1: 1 V/DIV, CH2: 1 V/DIV TIME: 400 ms/DIV
Measurement condition	• After warmed up to normal operating temperature • Engine racing

1. Mass air flow sensor signal
2. Throttle position sensor signal

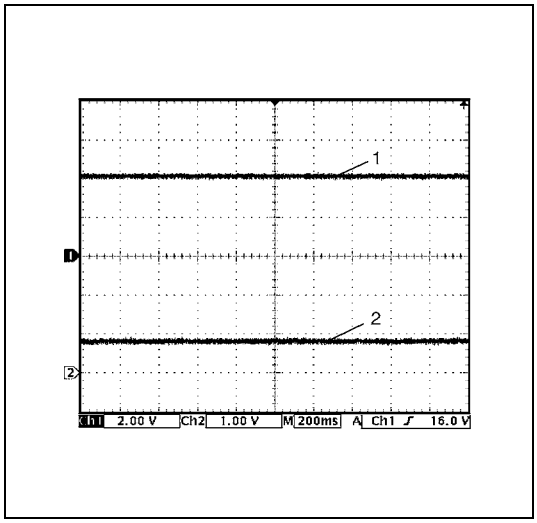

19. Reference waveform No.19

Manifold absolute pressure sensor signal at ignition switch turned ON

Measurement terminal	CH1: C63-15 to C63-28 CH2: C63-34 to C63-28
Oscilloscope setting	CH1: 2 V/DIV, CH2: 2 V/DIV TIME: 200 ms/DIV
Measurement condition	• After warmed up to normal operating temperature • Ignition switch turned ON

1. Manifold absolute pressure sensor signal
2. Throttle position sensor signal

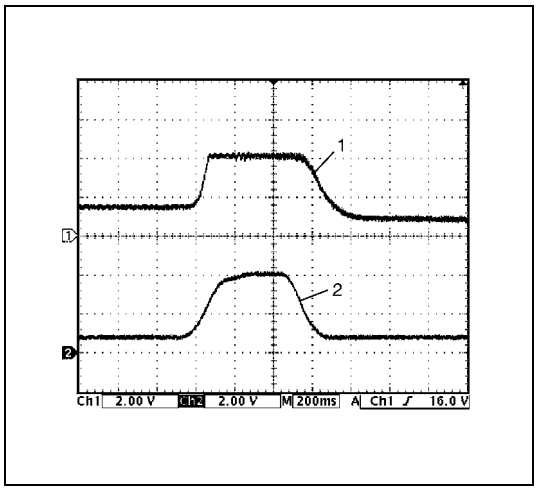

20. Reference waveform No.20

Manifold absolute pressure sensor signal at engine racing

Measurement terminal	CH1: C63-15 to C63-28 CH2: C63-34 to C63-28
Oscilloscope setting	CH1: 2 V/DIV, CH2: 2 V/DIV TIME: 200 ms/DIV
Measurement condition	• After warmed up to normal operating temperature • Engine racing

1. Manifold absolute pressure sensor signal
2. Throttle position sensor signal

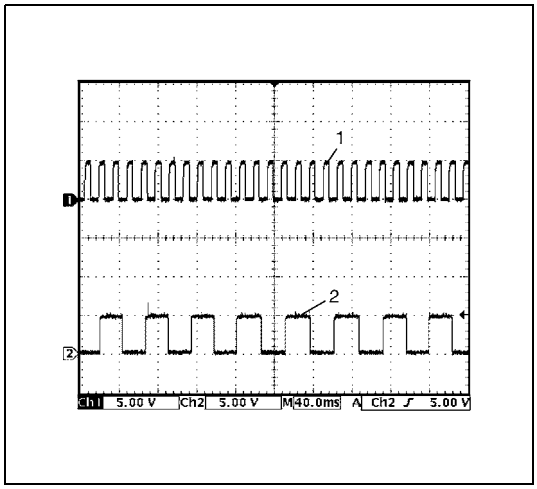

21. Reference waveform No.21

VSS signal at 30 km/h (19 mil/h)

Measurement terminal	CH1: G91-31 to C64-1 CH2: C63-19 to C64-1
Oscilloscope setting	CH1: 5 V/DIV, CH2: 5 V/DIV TIME: 40 ms/DIV
Measurement condition	• After warmed up to normal operating temperature • Drive vehicle at 30 km/h (19 mil/h)

1. VSS signal for speedometer
2. VSS signal

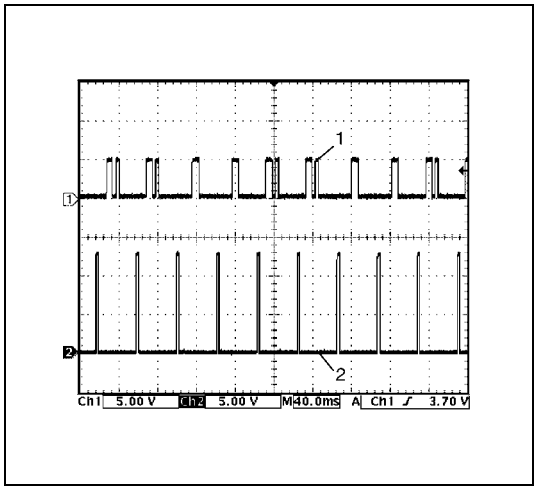

22. Reference waveform No.22

Ignition pulse (engine revolution) signal at engine idling

Measurement terminal	CH1: G63-10 to C64-1 CH2: G91-12 to C64-1
Oscilloscope setting	CH1: 5 V/DIV, CH2: 5 V/DIV TIME: 40 ms/DIV
Measurement condition	• After warmed up to normal operating temperature • Engine at specified idle speed

1. Cylinder reference signal (CMP reference signal)
2. Ignition pulse signal

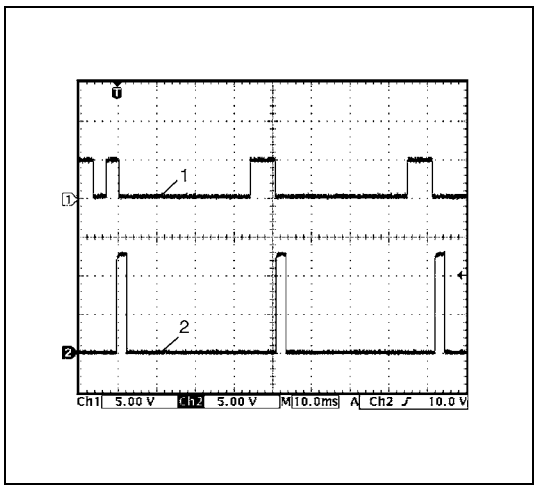

23. Reference waveform No.23

Ignition pulse (engine revolution) signal at engine idling

Measurement terminal	CH1: G63-10 to C64-1 CH2: G91-12 to C64-1
Oscilloscope setting	CH1: 5 V/DIV, CH2: 5 V/DIV TIME: 10 ms/DIV
Measurement condition	• After warmed up to normal operating temperature • Engine at specified idle speed

1. Cylinder reference signal (CMP reference signal)
2. Ignition pulse signal

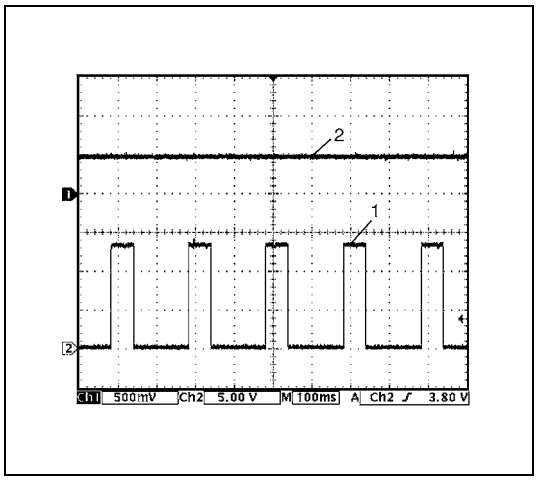

24. Reference waveform No.24

Engine coolant temperature signal at engine idling

Measurement terminal	CH1: C63-16 to C63-28 CH2: G91-32 to C64-1
Oscilloscope setting	CH1: 500 mV/DIV, CH2: 5 V/DIV TIME: 100 ms/DIV
Measurement condition	• After warmed up to normal operating temperature • Engine at specified idle speed

1. Engine coolant temperature signal for combination meter
2. Engine coolant temperature sensor signal

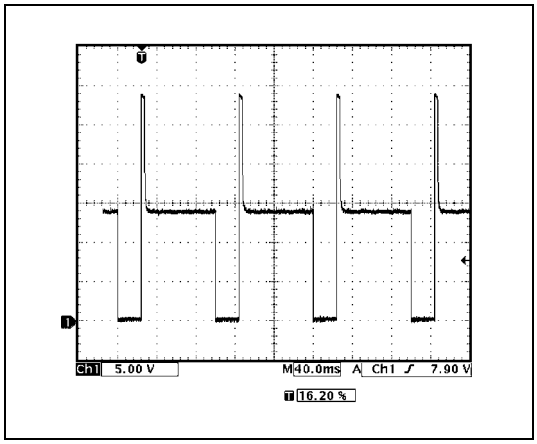

25. Reference waveform No.25

EVAP canister purge valve signal

Measurement terminal	CH1: G64-13 to C64-1
Oscilloscope setting	CH1: 5 V/DIV TIME: 40 ms/DIV
Measurement condition	• After warmed up to normal operating temperature • Drive vehicle at 40 km/h (25 mil/h) or more

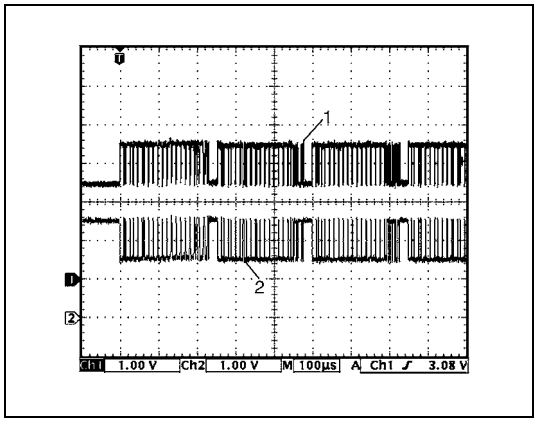

26. Reference waveform No.26

CAN communication line signal at ignition switch turned ON

Measurement terminal	CH1: G91-7 to C64-1 CH2: G91-8 to C64-1
Oscilloscope setting	CH1: 1 V/DIV, CH2: 1 V/DIV TIME: 100 µs/DIV
Measurement condition	Turn ignition switch to ON position (Depending on engine condition)

1. CAN communication line signal (High)
2. CAN communication line signal (Low)

DTC P0480 Fan 1 (Radiator Cooling Fan) Control Circuit

Wiring Diagram

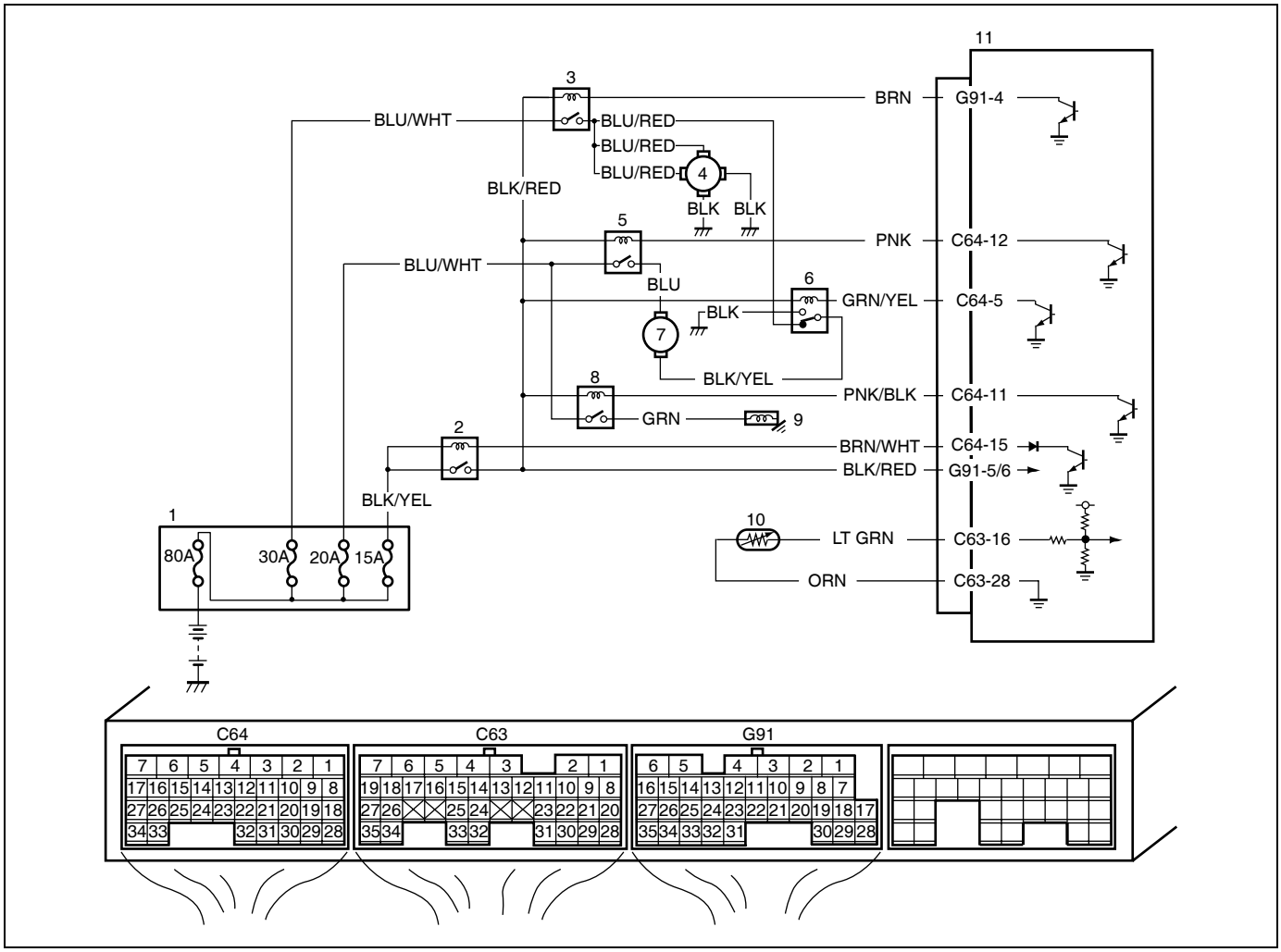

1. Relay/fuse box	4. Radiator fan motor	7. A/C condenser fan motor	10. ECT sensor
2. Main relay	5. A/C condenser fan relay No.1	8. A/C compressor relay	11. ECM
3. Radiator fan relay	6. A/C condenser fan relay No.2	9. A/C compressor	

Circuit Description

Radiator fan relay is controlled by ECM if ECT is specified value.
When A/C condenser fan motor is running while head light is turned ON and engine is running at below 1500 r/min, radiator fan relay is turned OFF for 2 sec. by ECM.

DTC DETECTING CONDITION	TROUBLE AREA
• Monitor signal of radiator fan relay is different from command signal.	• "BLK/WHT", "BLK/RED" or "BRN" circuit open or short • Radiator fan relay malfunction • ECM malfunction

Dtc Confirmation Procedure

1) With ignition switch turned OFF, connect scan tool to DLC.
2) Turn ON ignition switch and clear DTC using scan tool.
3) Warm up engine until radiator cooling fan starts to operate.
4) Check pending DTC in "ON BOARD TEST" or "PENDING DTC" mode and DTC in "DTC" mode.

Troubleshooting

Step	Action	Yes	No
1	Was “Engine and Emission Control System Check” performed?	Go to Step 2.	Go to “Engine and Emission Control System Check” in this section.
2	Check Relay Circuit 1) Disconnect radiator fan relay from relay/fuse box with ignition switch turned OFF. (See Fig. 1.) 2) Turn ignition switch to ON position. 3) Measure voltage between “BLK/RED” wire terminal of radiator fan relay connector and engine ground. Is voltage 10 – 14 V?	Go to Step 3.	“BLK/RED” circuit is open or high resistance wire.
3	Check Relay Circuit 1) Turn ignition switch to OFF position. 2) Install radiator fan relay to relay/fuse box. 3) Disconnect connectors from ECM. 4) Remove ECM from vehicle body and then connect connectors to ECM. 5) Turn ignition switch to ON position. 6) Measure voltage between “G91-4” wire terminal of ECM connector and vehicle body ground. Is voltage 10 – 14 V?	Go to Step 4.	Go to Step 6.
4	Check Relay Circuit 1) Turn ignition switch to OFF position. 2) Disconnect connectors from ECM. 3) Remove radiator fan relay from relay/fuse box. 4) Measure voltage between “G91-4” wire terminal of ECM connector and vehicle body ground with ignition switch turned ON. Is voltage 0 V?	Go to Step 5.	“BRN” wire shorted to power circuit.
5	Radiator Fan Control Signal Check 1) Disconnect negative (–) cable at battery. 2) Disconnect connector from ECT sensor. 3) Connect connectors to ECM. 4) Install radiator fan relay to relay/fuse box. 5) Connect negative (–) cable to battery. 6) Measure voltage between “G91-4” wire terminal of ECM connector and vehicle body ground with ignition switch turned ON. Is voltage about 0 V?	System is in good condition.	Substitute a known-good ECM and recheck.

Step	Action	Yes	No
6	Radiator Fan Control Signal Check 1) Turn ignition switch to OFF position. 2) Disconnect connectors from ECM. 3) Measure voltage between “G91-4” wire terminal of ECM connector and vehicle body ground with ignition switch turned ON. Is voltage 10 – 14 V?	Substitute a known-good ECM and recheck.	Go to Step 7.
7	Check Relay Circuit 1) Turn ignition switch to OFF position. 2) Remove radiator fan relay from relay/fuse box. 3) Check for proper connection to “G91-4” wire terminal of ECM connector and “BRN” wire terminal of radiator fan relay connector. 4) If OK, measure resistance between “G91-4” wire terminal of ECM connector and “BRN” wire terminal of radiator fan relay connector. Is resistance 1 Ω or less?	Go to Step 8.	“BRN” circuit is open or high resistance wire.
8	Check Relay Circuit 1) Measure resistance between “G91-4” wire terminal of ECM connector and vehicle body ground. Is it infinite?	Go to Step 9.	“BRN” wire shorted to ground circuit.
9	Check Radiator Fan Relay 1) Check radiator fan relay referring to “Main Relay, Fuel Pump Relay and Radiator Fan Relay Inspection” in Section 6E1. Is it in good condition?	System is in good condition. Intermittent trouble. Check for intermittent referring to “Intermittent and Poor Connection Inspection” in Section 0A.	Replace radiator fan relay.

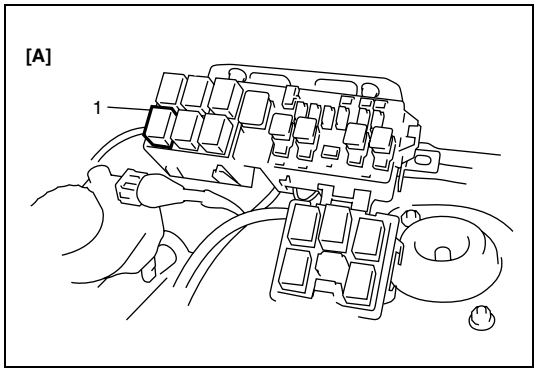

[A]: Fig. 1 for Step 2
1. Radiator fan relay

DTC P1601 CAN Communication Error

Wiring Diagram

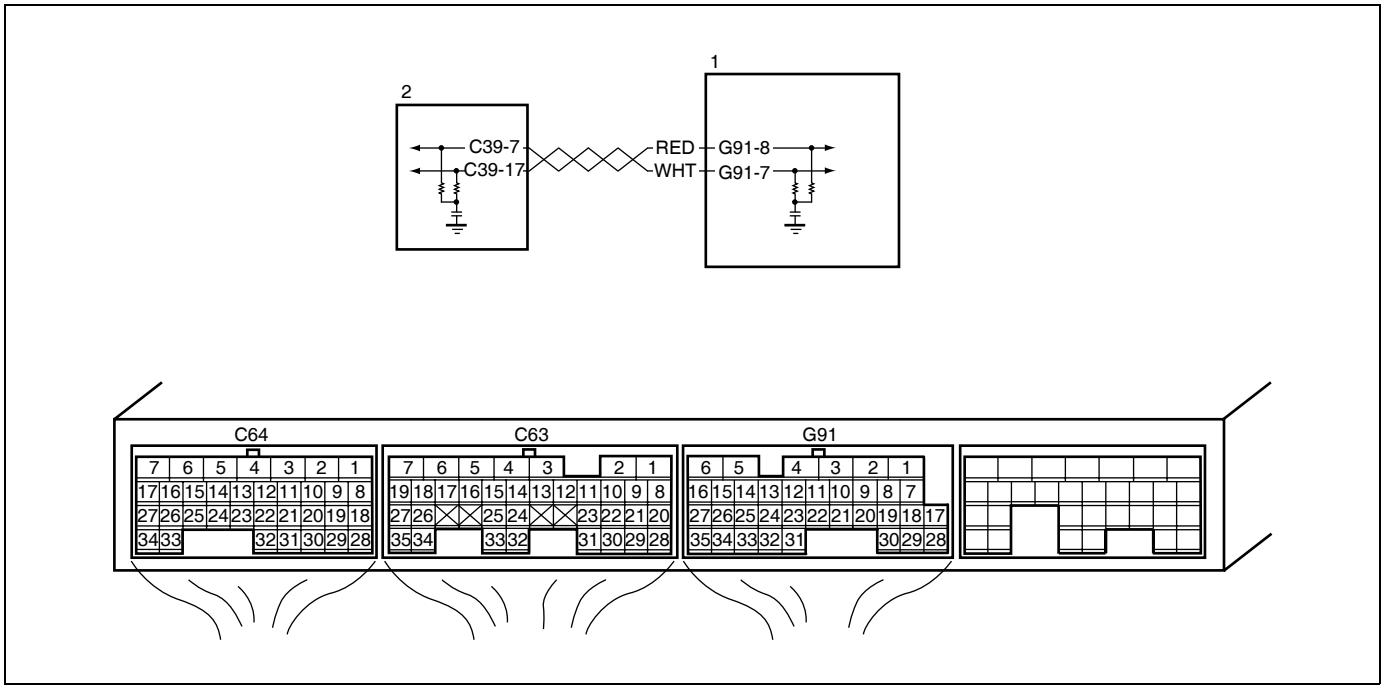

1. ECM
2. TCM

DTC Detecting Condition and Trouble Area

DTC DETECTING CONDITION	TROUBLE AREA
Transmission or reception error of communication data is detected by ECM for specified time continuously. (1 driving cycle detection logic)	• "RED" or "WHT" wire circuit open or short • TCM malfunction • ECM malfunction

DTC Confirmation Procedure

1) With ignition switch turned OFF, connect scan tool to DLC.
2) Turn ON ignition switch and clear DTC using scan tool.
3) Start engine and run it for 5 seconds.
4) Check DTC and pending DTC.

Troubleshooting

Step	Action	Yes	No
1	Was "Engine and Emission Control System Check" performed?	Go to Step 2.	Go to "Engine and Emission Control System Check" in this section.

Step	Action	Yes	No
2	Circuit Check 1) Turn ignition switch to OFF position. 2) Disconnect connectors from ECM and TCM. 3) Check for proper connection to “G91-7” terminal of ECM connector and “C39-7” terminal of TCM connector. 4) If OK, measure resistance between “G91-7” terminal of ECM connector and “C39-7” terminal of TCM connector. Is resistance 1Ω or less?	Go to Step 3.	“RED” wire circuit open or high resistance.
3	Circuit Check 1) Turn ignition switch to ON position. 2) Measure voltage between “G91-7” terminal of ECM connector and vehicle body ground. Is voltage 0 – 1 V?	Go to Step 4.	“RED” wire in shorted to power circuit.
4	Circuit Check 1) Turn ignition switch to OFF position. 2) Measure resistance between “G91-7” terminal of ECM connector and vehicle body ground. Is it infinite?	Go to Step 5.	“RED” wire in shorted to ground circuit.
5	Circuit Check 1) Check for proper connection to “G91-8” terminal of ECM connector and “C39-17” terminal of TCM connector. 2) If OK, measure resistance between “G91-8” terminal of ECM connector and “C39-17” terminal of TCM connector. Is resistance 1Ω or less?	Go to Step 6.	“WHT” wire circuit open or high resistance.
6	Circuit Check 1) Turn ignition switch to ON position. 2) Measure voltage between “G91-8” terminal of ECM connector and vehicle body ground. Is voltage 0 – 1 V?	Go to Step 7.	“WHT” wire in shorted to power circuit.
7	Circuit Check 1) Turn ignition switch to OFF position. 2) Measure resistance between “G91-8” terminal of ECM connector and vehicle body ground. Is it infinite?	Go to Step 8.	“WHT” wire in shorted to ground circuit.
8	DTC Check 1) Connect connectors to ECM and TCM. 2) Connect scan tool to DLC. 3) Check DTC of TCM. Is DTC P1701 indicated?	Substitute a known-good TCM and recheck. If OK, substitute a known-good ECM and recheck.	Substitute a known-good ECM and recheck.

DTC P1603 TCM Trouble Code Detected

DTC Detecting Condition

When ECM receives a trouble code from TCM, which indicates that some problem occurred in sensor circuits and its calculated values used for operations such as idle speed control, engine power control, and so on by TCM, ECM sets DTC P1603. (TCM outputs the trouble code to ECM when TCM cannot compute the engine control signal due to malfunctions of sensor circuits used for gear shift control.)

DTC Troubleshooting

Step	Action	Yes	No
1	Was “Engine and Emission Control System Check” performed?	Go to Step 2.	Go to “Engine and Emission Control System Check” in this section.
2	DTC Check Check DTC of TCM. Is there any DTC(s)?	Go to applicable DTC troubleshooting.	Substitute a known-good ECM and recheck.

Table B-7 Radiator Fan Control System Check

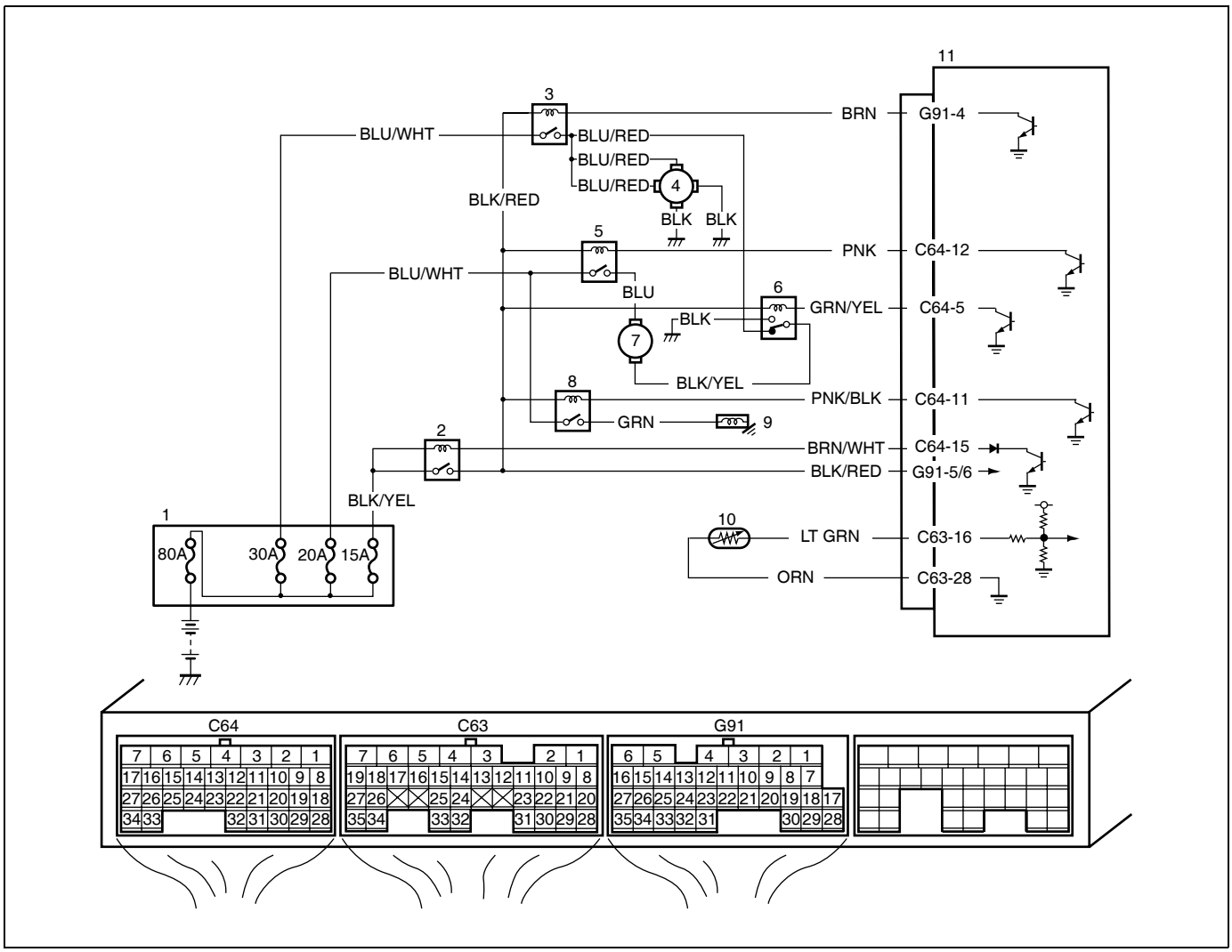

1. Relay/fuse box	5. A/C condenser fan relay No.1	9. A/C compressor
2. Main relay	6. A/C condenser fan relay No.2	10. ECT sensor
3. Radiator fan relay	7. A/C condenser fan motor	11. ECM
4. Radiator fan motor	8. A/C compressor relay	

Troubleshooting

Step	Action	Yes	No
1	DTC Check Is there DTC(s) ETC sensor circuit (DTC P0117/P0118) and/or radiator fan circuit (DTC P0480) displayed?	Go to corresponding DTC diag. flow table.	Go to Step 2.
2	Radiator Fan Motor Check Check radiator fan motor referring to “Radiator Fan Motor Inspection” in Section 6B. Is it in good condition?	System is in good condition.	Go to Step 3.
3	Main Fuse Check 1) Turn ignition switch to OFF position. 2) Remove main fuse from relay/fuse box. Is main (30 A) fuse in good condition?	Go to Step 4.	Replace main fuse.

Step	Action	Yes	No
4	Radiator Fan Motor Circuit Check 1) Remove radiator fan relay from relay/fuse box. 2) Measure voltage between “BLU/WHT” wire terminal of radiator fan relay connector and vehicle body ground. Is voltage 10 – 14 V?	Go to Step 5.	“BLU/WHT” wire open or high resistance circuit.
5	Check Radiator Fan Relay 1) Check radiator fan relay referring to “Main Relay, Fuel Pump Relay and Radiator Fan Relay Inspection” in Section 6E1. Is it in good condition?	Go to Step 6.	Replace radiator fan relay.
6	Radiator Fan Control Circuit Check 1) Disconnect radiator fan motor connector. 2) Measure resistance between each “BLU/RED” wire terminal of radiator fan motor connector and “BLU/RED” wire terminal of radiator fan relay connector. Is each resistance 1Ω or less?	Go to Step 7.	“BLU/RED” wire circuit open or poor connection.
7	Radiator Fan Control Circuit Check 1) Measure resistance between each “BLU/RED” wire terminal of radiator fan motor connector and vehicle body ground. Is each resistance infinite?	Go to Step 8.	“BLU/RED” wire circuit shorted to ground.
8	Radiator Fan Control Circuit Check 1) Turn ON ignition switch. 2) Measure voltage between each “BLU/RED” wire terminal of radiator fan motor connector and vehicle body ground. Is each voltage 0 V?	Go to Step 9.	“BLU/RED” wire shorted to power circuit.
9	Radiator Fan Control Circuit Check 1) Measure resistance between each “BLK” wire terminal of radiator fan motor connector and vehicle body ground. Is each resistance 1Ω or less?	Replace radiator fan motor.	“BLK” wire open or high resistance circuit.

SECTION 6A1

ENGINE MECHANICAL (M15 ENGINE)

WARNING:

For vehicles equipped with a Supplemental Restraint (Air Bag) System :

- **Service on and around the air bag system components or wiring must be performed only by an authorized SUZUKI dealer. Refer to "Air Bag System Components and Wiring Location View" under "General Description" in air bag system section in order to confirm whether you are performing service on or near the air bag system components or wiring. Please observe all WARNINGS and "Service Precautions" under "On-Vehicle Service" in air bag system section before performing service on or around the air bag system components or wiring. Failure to follow WARNINGS could result in unintentional activation of the system or could render the system inoperative. Either of these two conditions may result in severe injury.**
- **Technical service work must be started at least 90 seconds after the ignition switch is turned to the "LOCK" position and the negative cable is disconnected from the battery. Otherwise, the system may be activated by reserve energy in the Sensing and Diagnostic Module (SDM).**

NOTE:

For the items with asterisk (*) in the "CONTENTS" below, refer to the same section of the Service Manual mentioned in "Foreword" of this Manual.

CONTENTS

General Description ..... *
- Engine Construction Description ..... *
- Engine Lubrication Description ..... *
- Variable Valve Timing (VVT) System Description ..... *
  - System description ..... *
  - Oil control valve ..... *
  - Cam timing sprocket ..... *
  - Timing advancing ..... *
  - Timing holding ..... *
  - Timing retarding ..... *
  - Targeted timing varying operation ..... *

Diagnosis ..... *
- Diagnosis Table ..... *
- Compression Check ..... *
- Engine Vacuum Check ..... *
- Oil Pressure Check ..... *
- Valve Lash (Clearance) Inspection ..... *
- Shim Replacement ..... *

On-Vehicle Service 6A1-3
- Air Cleaner Element Removal and Installation ..... *
- Air Cleaner Element Inspection and Cleaning ..... *
- Knock Sensor Removal and Installation ..... *
- Cylinder Head Cover Removal and Installation ..... *
- Throttle Body and Intake Manifold Components ..... *
- Throttle Body Removal and Installation ..... *
- Intake Manifold Removal and Installation ..... *
- Exhaust Manifold Components ..... *
- Exhaust Manifold Removal and Installation ..... *
- Oil Pan and Oil Pump Strainer Components ..... *
- Oil Pan and Oil Pump Strainer Removal and Installation ..... *
- Engine Mountings Components 6A1-3

Unit Repair Overhaul 6A1-4
- Engine Assembly Removal and Installation 6A1-4
- Timing Chain Cover Components ..... *
- Timing Chain Cover Removal and Installation ..... *
- Timing Chain Cover Inspection ..... *
  - Oil seal ..... *
  - Timing chain cover ..... *
  - Oil control valve ..... *

Oil gallery pipe ..... *
Oil Pump Components ..... *
Oil Pump Removal and Installation ..... *
Oil Pump Disassembly and Assembly ..... *
Oil Pump Inspection ..... *
Oil seal ..... *
Oil pump assembly ..... *
Radial clearance ..... *
Side clearance ..... *
Relief valve spring free length and load ..... *
Timing Chain and Chain Tensioner Components ..... *
Timing Chain and Chain Tensioner Removal and Installation ..... *
Timing Chain and Timing Chain Tensioner Inspection ..... *
Timing chain tensioner ..... *
Crankshaft timing sprocket ..... *
Timing chain ..... *
Timing chain tensioner adjuster ..... *
Timing chain No.1 guide ..... *
Camshaft, Tappet and Shim Components ..... *
Camshaft, Tappet and Shim Removal and Installation ..... *
Camshaft, Tappet and Shim Inspection ..... *
Intake cam timing sprocket assembly ..... *
Cam wear ..... *
Camshaft runout ..... *
Camshaft journal wear ..... *
Wear of tappet and shim ..... *
Valves and Cylinder Head Components ..... *
Valves and Cylinder Head Removal and Installation ..... *
Valves and Cylinder Head Disassembly and Assembly ..... *
Valves and Cylinder Head Inspection ..... *
Valve guides ..... *
Valves ..... *
Cylinder head ..... *
Valve springs ..... *
Pistons, Piston Rings, Connecting Rods and Cylinders Components ..... *
Pistons, Piston Rings, Connecting Rods and Cylinders Removal and Installation ..... *
Pistons, Piston Rings, Connecting Rods and Cylinders Disassembly and Assembly ..... *
Pistons, Piston Rings, Connecting Rods and Cylinders Inspection ..... *
Cylinder ..... *
Pistons ..... *
Piston pin ..... *
Piston rings ..... *
Connecting rod ..... *
Crank pin and connecting rod bearings ..... *
Main Bearings, Crankshaft and Cylinder Block Components ..... *
Main Bearings, Crankshaft and Cylinder Block Removal and Installation ..... *
Main Bearings, Crankshaft and Cylinder Block Inspection 6A1-8
Main bearing cap No.1 bolt ..... *
Crankshaft ..... *
Main bearings 6A1-8
Rear oil seal ..... *
Flywheel ..... *
Sensor plate ..... *
Cylinder block ..... *
Required Service Material ..... *
Tightening Torque Specification 6A1-13
Special Tool ..... *

On-Vehicle Service

Engine Mountings Components

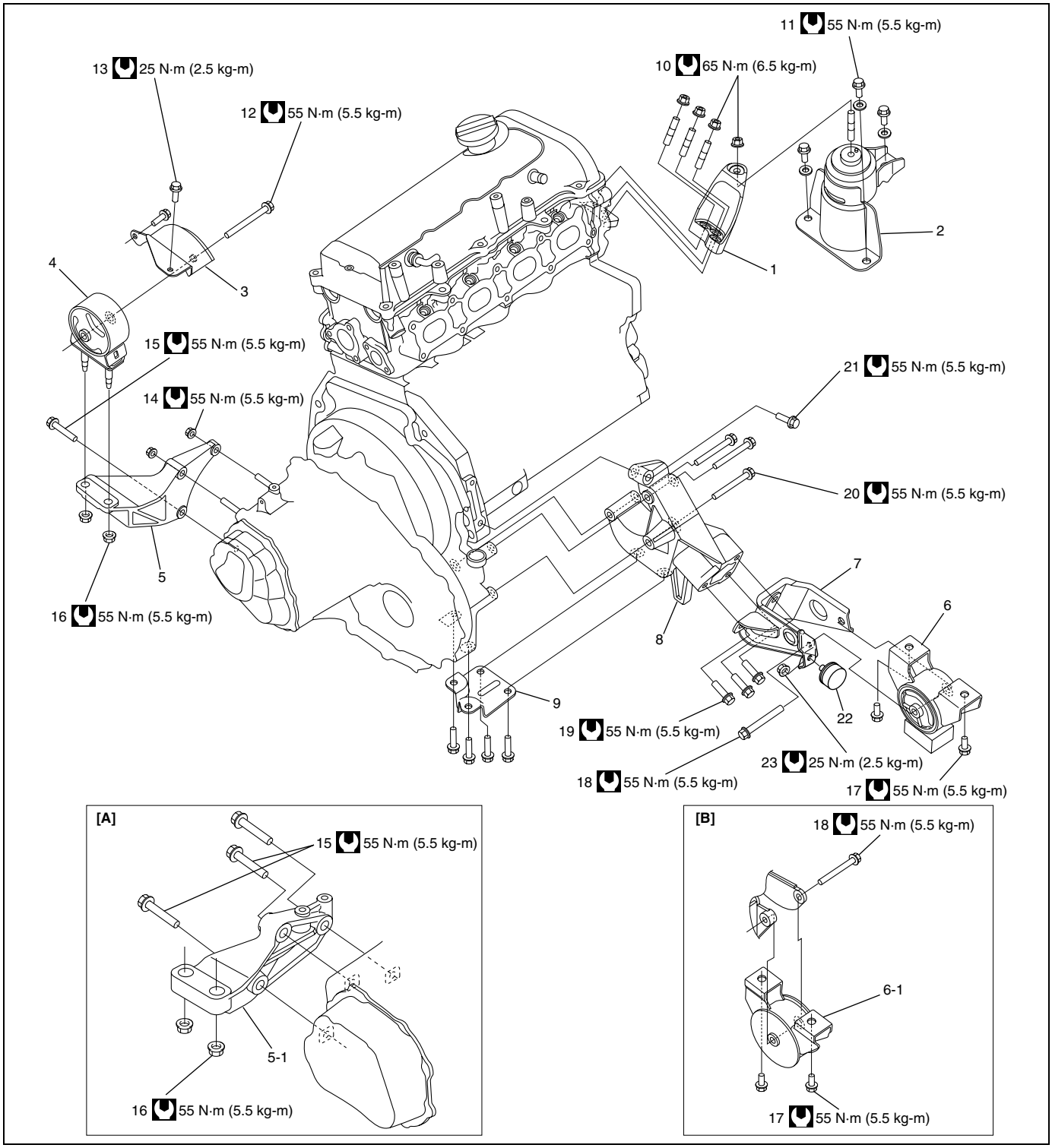

[A] : A/T vehicle	7. Engine rear mounting No.1 bracket	17. Engine rear mounting bolt
[B] : AWD vehicle	8. Engine rear mounting No.2 bracket	18. Engine rear mounting bolt
1. Engine right mounting	9. Engine rear mounting bracket stiffener	19. Engine rear mounting No.1 bracket bolt
2. Engine right body side bracket	10. Engine right mounting nut	20. Engine rear mounting No.2 bracket bolt
3. Engine left body side bracket	11. Engine right body side bracket bolt	21. Engine rear mounting No.2 bracket bolt
4. Engine left mounting	12. Engine left mounting bolt	22. Dynamic damper (for FWD vehicle)
5. Engine left mounting bracket (for M/T vehicle)	13. Engine left body side bracket bolt	23. Dynamic damper nut
5-1. Engine left mounting bracket (for A/T vehicle)	14. Engine left mounting bracket nut	◆ Tightening torque
6. Engine rear mounting (for FWD vehicle)	15. Engine left mounting bracket bolt	
6-1. Engine rear mounting (for AWD vehicle)	16. Engine left mounting bracket nut	

Unit Repair Overhaul

Engine Assembly Removal and Installation

Removal

1) Relieve fuel pressure referring to “Fuel Pressure Relief Procedure” in Section 6.
2) Disconnect negative and positive cables at battery.
3) Remove engine hood after disconnecting windshield washer hose.
4) Remove right and left side engine under covers.
5) Remove A/C compressor belt by referring to “Compressor Drive Belt Replacement” in Section 1B (if equipped).
6) Drain engine oil referring to “Engine Oil and Filter Change” in Section 0B.
7) Drain transaxle oil referring to “Manual Transaxle Oil Change” in Section 7A2 (for M/T vehicle).
8) Drain A/T fluid referring to “Fluid change” in Section 7B (for A/T vehicle).
9) Drain transfer oil referring to “Transfer Oil Change” in Section 7D (for AWD vehicle).
10) Drain coolant by referring to “Cooling System Flush and Refill” in Section 6B.

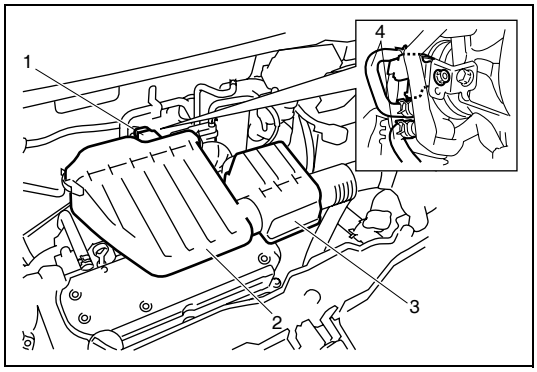

11) Disconnect MAF sensor coupler (1).
12) Remove air cleaner case (2) and resonator (3).
13) Remove canister purge hose (4) from EVAP canister purge valve.
14) With hose connected, detach A/C compressor from its bracket (if equipped).

NOTE:

Suspend removed A/C compressor at a place where no damage will be caused during removal and installation of engine assembly.

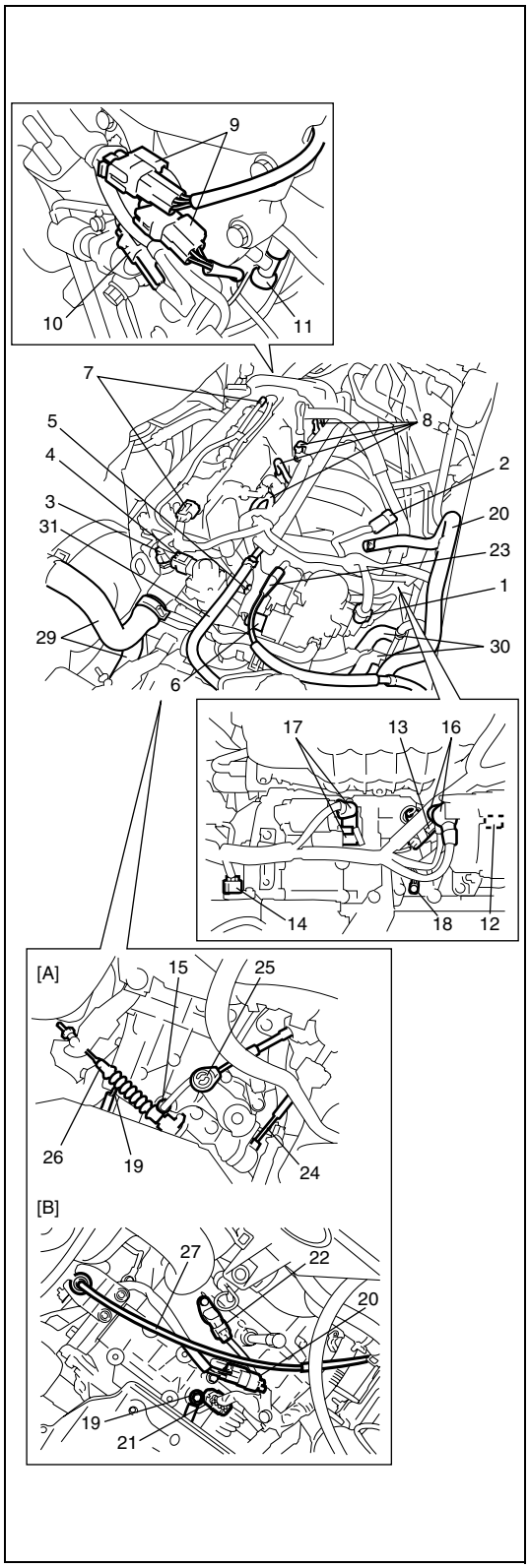

15) Disconnect the following electric lead wires:
- TP sensor (1)
- MAP sensor (2)
- ECT sensor (3)
- EGR valve (4)
- CMP sensor (5)
- IAC valve (6)
- Ignition coil assembly (7)
- Injectors (8)
- Heated oxygen sensor (9)
- Oil control valve (10)
- Engine oil pressure switch (11)
- CKP sensor (12)
- Knock sensor (13)
- VSS (14)
- Back up light switch (15) (for M/T vehicle)
- Generator (16)
- Starting motor (17)
- Ground terminal (18) from cylinder block
- Battery ground cable (19) from transaxle
- Transmission range switch (20) (for A/T vehicle)
- A/T shift solenoid and A/T fluid temperature sensor (21) (for A/T vehicle)
- Input shaft speed sensor (22) (for A/T vehicle)
- Magnet clutch switch of A/C compressor (if equipped)
- Each wire harness clamps

16) Remove fuse box from its bracket.
17) Disconnect the following cables :
- Accelerator cable (23)
- Gear select control cable (24) (for M/T vehicle)
- Gear shift control cable (25) (for M/T vehicle)
- Clutch cable (26) (for M/T vehicle)
- A/T selector cable (27) (for A/T vehicle)

18) Disconnect the following hoses :
- Brake booster hose (28) from intake manifold
- Radiator inlet and outlet hoses (29) from each pipe
- Heater inlet and outlet hoses (30) from each pipe
- Fuel feed hoses (31) from fuel feed pipe
- A/T fluid hoses from radiator (for A/T vehicle)

[A] : M/T vehicle
[B] : A/T vehicle

19) Remove exhaust No.1 pipe referring to “Exhaust Manifold Removal and Installation” in this section.
20) Disconnect right and left drive shaft joints to differential gear referring to “Drive Shaft Assembly Removal and Installation” in Section 4A.
For engine and transaxle removal, it is not necessary to remove drive shafts from steering knuckle.
21) For AWD vehicle, remove propeller shaft referring to “Propeller Shaft Removal and Installation” in Section 4B.

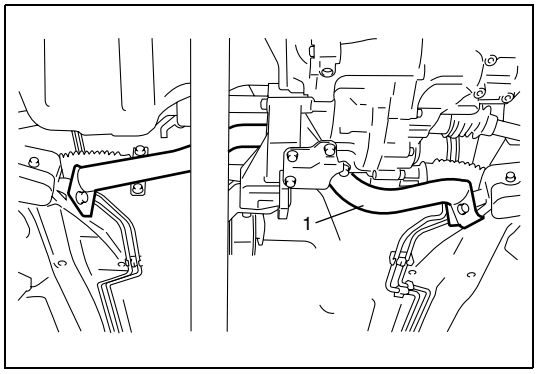

22) Remove cross member (1).
23) Install lifting device.

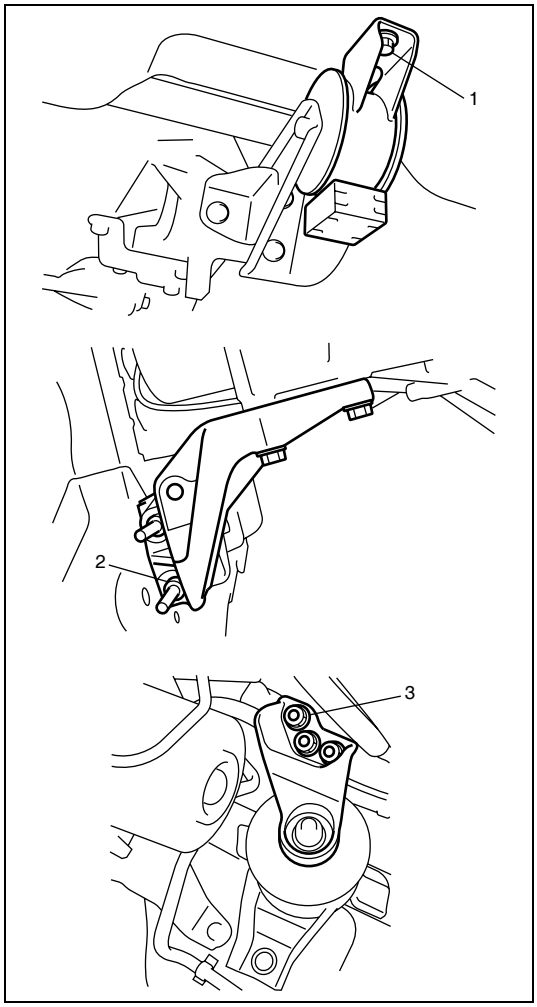

24) Remove engine rear mounting bolts (1), engine left mounting bracket nuts (2) and engine right mounting nuts (3).

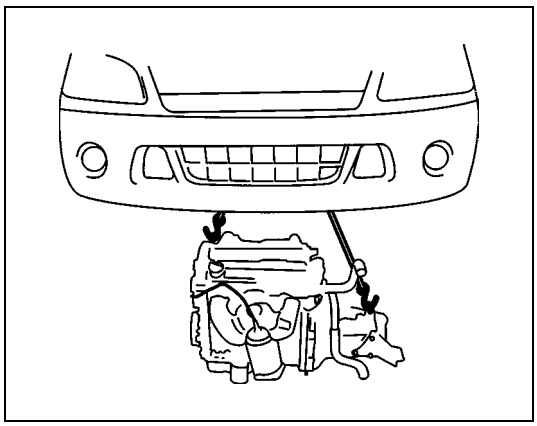

25) Before removing engine with transaxle from body, recheck to make sure all hoses, electric wires and cables are disconnected from engine and transaxle.
26) Lower engine with transaxle from body.

NOTE:

Before lowering engine, to avoid damage to A/C compressor, raise it through clearance made on engine crankshaft pulley side. At this time, use care so that no excessive force is applied to hoses.

27) Disconnect transaxle from engine referring to “Transaxle Unit Dismounting and Remounting” in Section 7A2(for M/T vehicle).
28) Disconnect automatic transaxle from engine referring to “Automatic Transaxle Assembly” in Section 7B (for A/T vehicle).
29) Remove clutch cover and clutch disk referring to “Clutch Cover, Clutch Disc and Flywheel Removal and Installation” in Section 7C1 (for M/T vehicle).

Installation

1) Install clutch cover and clutch disk referring to “Clutch Cover, Clutch Disc and Flywheel Removal and Installation” in Section 7C1 (for M/T vehicle).
2) Connect transaxle to engine referring to “Transaxle Unit Dismounting and Remounting” in Section 7A2 (for M/T vehicle).
3) Connect automatic transaxle to engine referring to “Automatic Transaxle Assembly” in Section 7B (for A/T vehicle).
4) Lift engine with transaxle into engine compartment, but do not remove lifting device.
5) Install engine rear mounting bolts (1), engine left mounting bracket nuts (2) and engine right mounting nuts (3).
   Tighten these bolts and nuts to specified torque.

   Tightening torque
   Engine left mounting bolts
   (a) : 55 N·m (5.5 kg-m, 40.0 lb-ft)
   Engine right mounting bracket nuts
   (b) : 65 N·m (6.5 kg-m, 47.0 lb-ft)
6) Remove lifting device.

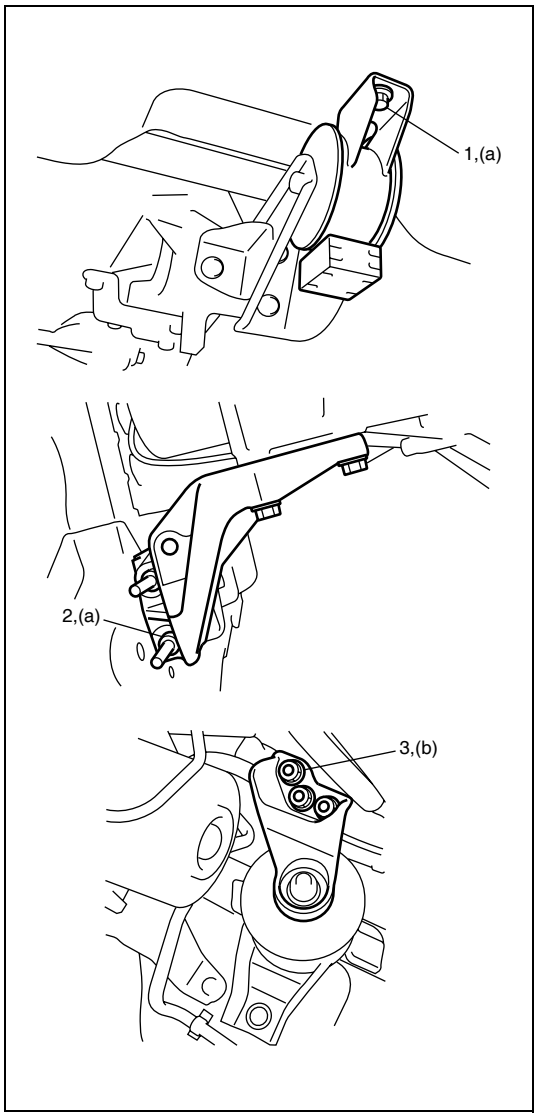

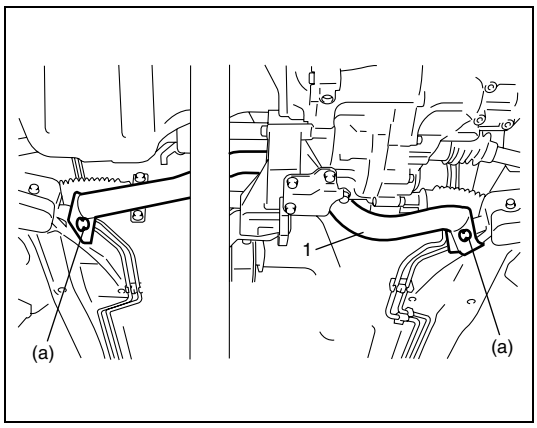

7) Install cross member (1).
   Tighten bolts to specified torque.

Tightening torque
Cross member bolts
(a) : 60 N·m (6.0 kg-m, 43.0 lb-ft)

8) For AWD vehicle, install propeller shaft referring to “Propeller Shaft Removal and Installation” in Section 4B.
9) Connect drive shaft joints referring to Section 4A.
10) Install exhaust No.1 pipe referring to “Exhaust Manifold Removal and Installation” in this section.
11) Reverse disconnected hoses, cables and electric wires for connection.
12) Install air cleaner case and resonator.
13) Install A/C compressor to its bracket (if equipped).
14) Adjust A/C compressor belt tension (if equipped) referring to “Compressor Drive Belt Inspection and Adjustment” in Section 1B.
15) Adjust accelerator cable play referring to “Accelerator Cable Adjustment” in Section 6E1.
16) Check to ensure that all removed parts are back in place. Reinstall any necessary parts which have not been reinstalled.
17) Refill cooling system with coolant referring to “Cooling System Flush and Refill” in Section 6B.
18) Refill engine with engine oil referring to “Engine Oil and Filter Change” in Section 0B.
19) Refill transaxle with transaxle oil referring to “Manual Transaxle Oil Change” in Section 7A2 (for M/T vehicle).
20) Refill A/T fluid referring to “Fluid change” in Section 7B (for A/T vehicle).
21) Refill transfer with transfer oil referring to “Transfer Oil Change” in Section 7D (for AWD vehicle).
22) Connect negative cable at battery.
23) Verify that there is no fuel leakage, coolant leakage, oil leakage and exhaust gas leakage at each connection.

Main Bearings, Crankshaft and Cylinder Block Inspection

Main bearings

General Information

- Service main bearings are available in standard size and 0.25 mm (0.0098 in.) undersize, and each of them has 5 kinds of bearings differing in tolerance.

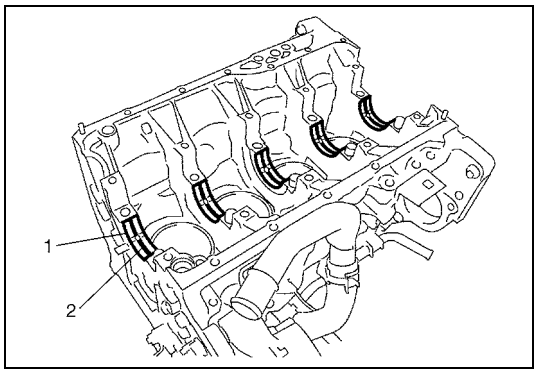

- Upper half of bearing (1) has an oil groove (2) as shown in figure.
  Install this half with oil groove to cylinder block.
- Lower half of bearing does not have an oil groove.

Visual Inspection

Check bearings for pitting, scratches, wear or damage.
If any malcondition is found, replace both upper and lower halves.
Never replace either half without replacing the other half.

Main Bearing Clearance

CAUTION:
Do not rotate crankshaft while gaging plastic is installed.

Check clearance by using gaging plastic according to the following procedure.

1) Remove bearing caps.
2) Clean bearings and main journals.

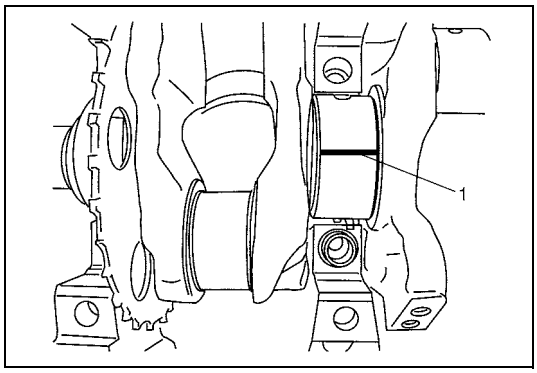

3) Place a piece of gaging plastic (1) the full width of bearing (parallel to crankshaft) on journal, avoiding oil hole.

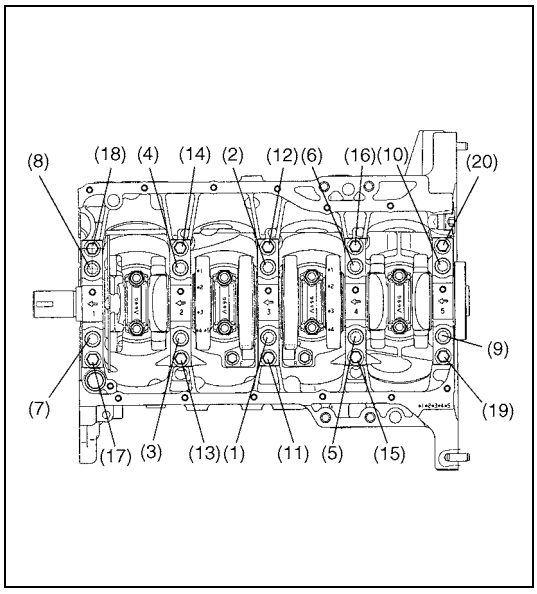

4) Tighten main bearing cap No.1 bolts (1) – (10) and main bearing No.2 cap bolts (11) – (20) gradually as follows.
   a) Tighten bolts (1) – (10) to 30 N·m (3.0 kg-m, 22.0 lb-ft) according to numerical order in figure.
   b) In the same manner as in Step a), tighten them to 50 N·m (5.0 kg-m, 36.5 lb-ft).
   c) In the same manner as in step a), retighten them to 60°.
   d) Tighten bolts (11) – (20) to 25 N·m (2.5 kg-m, 18.0 lb-ft) according to numerical order in figure.

Tightening torque
Main bearing cap No.1 bolts (1) – (10) :
30 N·m (3.0 kg-m, 22.0 lb-ft), 50 N·m (5.0 kg-m, 36.5 lb-ft) and then retighten by turning through 60°
Main bearing cap No.2 bolts (11) – (20) :
25 N·m (2.5 kg-m, 18.0 lb-ft)

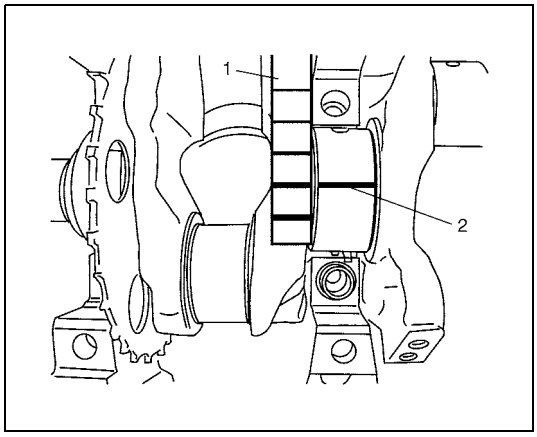

5) Remove bearing caps and using scale (1) on gaging plastic (2) envelop, measure gaging plastic width at its widest point. If clearance exceeds its limit, replace bearing. Always replace both upper and lower inserts as a unit.
   A new standard bearing may produce proper clearance. If not, it will be necessary to regrind crankshaft journal for use of 0.25 mm (0.0098 in.) undersize bearing.
   After selecting new bearing, recheck clearance.

Main bearing clearance
Standard : 0.021 – 0.041 mm (0.0008 – 0.0016 in.)
Limit : 0.054 mm (0.0021 in.)

Selection of Main Bearings

Standard Bearing

If bearing is in malcondition, or bearing clearance is out of specification, select a new standard bearing according to the following procedure and install it.

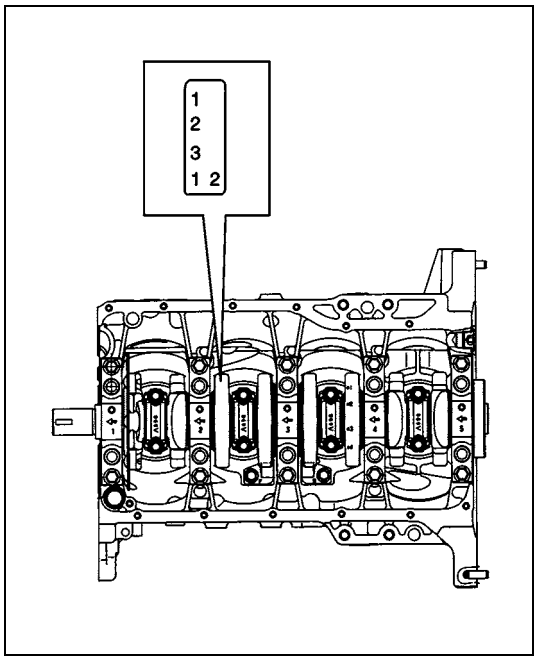

1) First check journal diameter. As shown in figure, crank web No.2 has stamped numbers.
   Three kinds of numbers (“1”, “2” and “3”) represent the following journal diameters.
   Stamped numbers on crank web No.2 represent journal diameters marked with an arrow in figure respectively.
   For example, stamped number “1” indicates that corresponding journal diameter is 51.994 – 52.000 mm (2.0471 – 2.0472 in.).

Crankshaft journal diameter

Stamped numbers	Journal diameter
1	51.9940 – 52.0000 mm (2.0471 – 2.0472 in.)
2	51.9880 – 51.9939 mm (2.0468 – 2.0470 in.)
3	51.9820 – 51.9879 mm (2.0465 – 2.0467 in.)

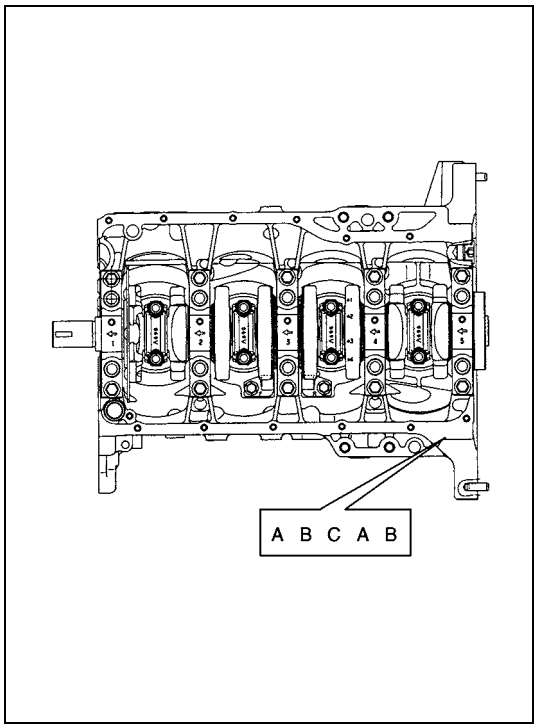

2) Next, check bearing cap bore diameter without bearing. On mating surface of cylinder block, five alphabets are stamped as shown in figure.
Three kinds of alphabets (“A”, “B” and “C”) or numbers (“1”, “2” and “3”) represent the following cap bore diameters.
Stamped alphabets or numbers on cylinder block represent bearing cap bore diameter marked with an arrow in figure respectively. For example, stamped “A” or “1” indicates that corresponding bearing cap bore diameter is 56.000 – 56.006 mm (2.2047 – 2.2050 in.).

Crankshaft bearing cap bore

Stamped alphabet (number)	Bearing cap bore diameter (without bearing)
A (1)	56.0000 – 56.0060 mm (2.2048 – 2.2049 in.)
B (2)	56.0061 – 56.0120 mm (2.2050 – 2.2051 in.)
C (3)	56.0121 – 56.0180 mm (2.2052 – 2.2054 in.)

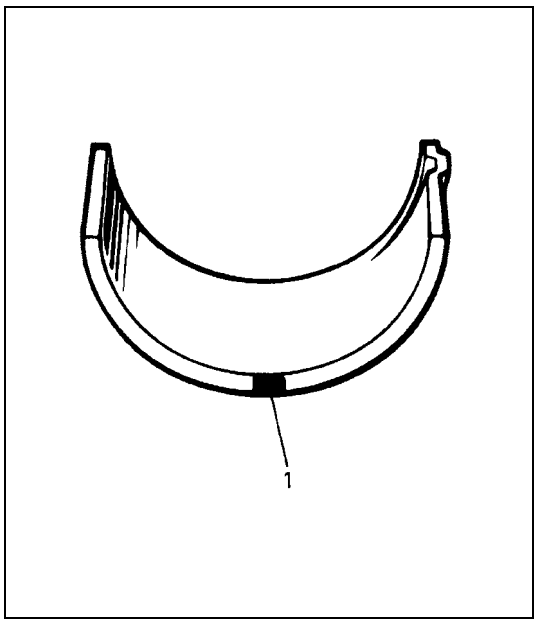

3) There are five kinds of standard bearings differing in thickness. To distinguish them, they are painted in the following colors at the position as indicated in figure.
Each color indicated the following thickness at the center of bearing.

Standard size of crankshaft main bearing thickness

Color painted	Bearing thickness
Purple	1.992 – 1.996 mm (0.07843 – 0.07858 in.)
Brown	1.995 – 1.999 mm (0.07855 – 0.07870 in.)
Green	1.998 – 2.002 mm (0.07867 – 0.07882 in.)
Black	2.001 – 2.005 mm (0.07878 – 0.07893 in.)
Colorless (no paint)	2.004 – 2.008 mm (0.07890 – 0.07906 in.)

1. Paint

4) From number stamped on crank web No.2 and alphabets stamped on cylinder block, determine new standard bearing to be installed to journal, by referring to table shown below.
For example, if number stamped on crank web No.2 is “1” and alphabet stamped on cylinder block is “B”, install a new standard bearing painted in “Brown” to its journal.

Specification of new standard crankshaft main bearing size

		Number stamped on crank web No.2 (Journal diameter)		
		1	2	3
Alphabet stamped on cylinder block (Cap bore dia.)	A (1)	Purple	Brown	Green
	B (2)	Brown	Green	Black
	C (3)	Green	Black	Colorless
		New standard bearing to be installed.		

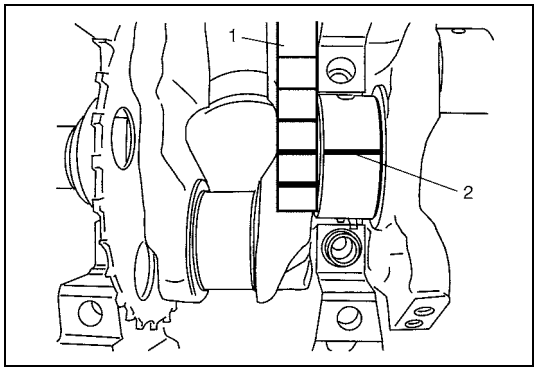

5) Using scale (1) on gaging plastic (2), check bearing clearance with newly selected standard bearing.
   If clearance still exceeds its limit, use next thicker bearing and recheck clearance.
6) When replacing crankshaft or cylinder block due to any reason, select new standard bearings to be installed by referring to number stamped on new crankshaft or alphabets stamped on new cylinder block.

Undersize Bearing (0.25 mm (0.0098 in.))

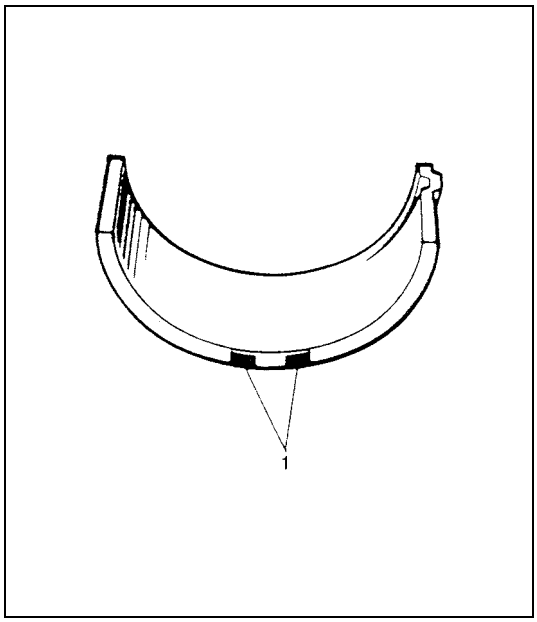

- 0.25 mm (0.0098 in.) undersize bearing is available, in five kinds varying in thickness.
  To distinguish them, each bearing is painted in the following colors at such position as indicated in figure.
  Each color represents the following thickness at the center of bearing.

Undersize of crankshaft main bearing thickness

Color painted	Bearing thickness
Red and Purple	2.117 – 2.121 mm (0.08335 – 0.08350 in.)
Red and Brown	2.120 – 2.124 mm (0.08347 – 0.08362 in.)
Red and Green	2.123 – 2.127 mm (0.08359 – 0.08374 in.)
Red and Black	2.126 – 2.130 mm (0.08371 – 0.08385 in.)
Red only	2.129 – 2.133 mm (0.08382 – 0.08397 in.)

1. Paint

- If necessary, regrind crankshaft journal and select undersize bearing to use with it as follows.

1) Regrind journal to the following finished diameter.

Finished diameter
51.732 – 51.750 mm (2.0367 – 2.0374 in.)

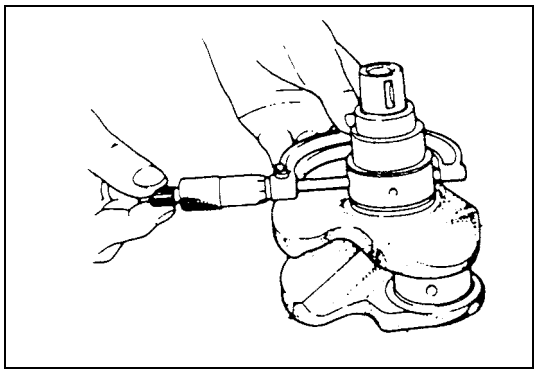

2) Using micrometer, measure reground journal diameter.
   Measurement should be taken in two directions perpendicular to each other in order to check for out-of-round.
3) Using journal diameter measured above and alphabets stamped on cylinder block, select an undersize bearing by referring to table given below.
   Check bearing clearance with newly selected undersize bearing.

Specification of new standard undersize crankshaft main bearing

		Measured journal diameter		
		51.7320 – 51.7379 mm (2.0367 – 2.0369 in.)	51.7380 – 51.7439 mm (2.0370 – 2.0371 in.)	51.7440 – 51.7500 mm (2.0372 – 2.0373 in.)
Alphabets stamped on cylinder block	A (1)	Red and Green	Red and Brown	Red and Purple
	B (2)	Red and Black	Red and Green	Red and Brown
	C (3)	Red only	Red and Black	Red and Green
		Undersize bearing to be installed		

Tightening Torque Specification

Fastening part	Tightening torque		
	N•m	kg-m	lb-ft
Oil pressure switch	14	1.4	10.5
Camshaft housing bolts (for replacement of shim)	8	0.8	6.0
Camshaft housing bolts	11	1.1	8.0
Engine cover bolts	8	0.8	6.0
Intake manifold bolts and nuts	25	2.5	18.0
Exhaust manifold bolts and nuts	50	5.0	36.5
Exhaust pipe No.1 bolts	50	5.0	36.5
Exhaust manifold stiffener bolts	50	5.0	36.5
Exhaust pipe No.2 bolts	43	4.3	31.5
Exhaust oxygen sensor	45	4.5	32.5
Oil pump strainer bolt	11	1.1	8.0
Oil pump strainer bracket bolt	11	1.1	8.0
Oil pan bolts and nuts	11	1.1	8.0
Oil pan drain plug bolt	50	5.0	36.5
Timing chain cover bolts	25	2.5	18.0
Crank shaft pulley bolt	150	15.0	108.5
Oil pump rotor plate bolts	11	1.1	8.0
Timing chain No.1 guide bolts	9	0.9	6.5
Timing chain tensioner adjuster bolts	11	1.1	8.0
Venturi plug	5	0.5	3.5
Cylinder head bolt for M8	25	2.5	18.0

Fastening part	Tightening torque		
	N•m	kg-m	lb-ft
Cylinder head bolts for M10	a) Tighten 20 N·m b) Tighten 40 N·m c) Retighten by turning through 60° d) Retighten by turning through 60°	a) Tighten 2.0 kg-m b) Tighten 4.0 kg-m c) Retighten by turning through 60° d) Retighten by turning through 60°	a) Tighten 14.5 lb-ft b) Tighten 29.0 lb-ft c) Retighten by turning through 60° d) Retighten by turning through 60°
Connecting rod bearing cap nuts	a) Tighten 15 N·m b) Retighten by turning through 45° c) Retighten by turning through 45°	a) Tighten 1.5 kg-m b) Retighten by turning through 45° c) Retighten by turning through 45°	a) Tighten 11.0 lb-ft b) Retighten by turning through 45° c) Retighten by turning through 45°
Engine mounting bolts for M8	25	2.5	18.0
Engine mounting bolts and nuts for M10	55	5.5	40.0
Engine right mounting nuts	65	6.5	47.0
Cross member bolts	60	6.0	43.0
Dynamic damper nut	25	2.5	18.0
Main bearing cap No.1 bolts	a) Tighten 30 N·m b) Tighten 50 N·m c) Retighten by turning through 60°	a) Tighten 3.0 kg-m b) Tighten 5.0 kg-m c) Retighten by turning through 60°	a) Tighten 22.0 lb-ft b) Tighten 36.5 lb-ft c) Retighten by turning through 60°
Main bearing cap No.2 bolts	25	2.5	18.0
Sensor plate bolts	11	1.1	8.0
Rear oil seal housing bolts	11	1.1	8.0
Flywheel or drive plate bolts	70	7.0	51.0
Transaxle stiffener bolts	50	5.0	36.5
Timing chain tensioner bolt	25	2.5	18.0
Oil gallery pipe No.1 bolts	30	3.0	21.5
Oil gallery pipe No.2 bolts	11	1.1	8.0
Oil gallery pipe No.3 bolts	11	1.1	8.0
Oil control valve mounting nuts	11	1.1	8.0
Intake camshaft sprocket bolt	60	6.0	43.0

SECTION 6B

ENGINE COOLING (M15 ENGINE)

NOTE:

For the items with asterisk (*) in the "CONTENTS" below, refer to the same section of the Service Manual mentioned in "Foreword" of this manual.

CONTENTS

General Description ..... *
- Cooling System Circulation ..... *
- Coolant ..... *
- Diagnosis ..... *
- Diagnosis Table ..... *
- System Circuit Inspection ..... *

Maintenance ..... *
- Coolant Level Check ..... *
- Engine Cooling System Inspection and Service ..... *
- Cooling System Flush and Refill ..... *
- Water Pump/Generator Drive Belt Tension Inspection and Adjustment ..... *

On-Vehicle Service 6B-2
- Cooling System Components ..... *
- Cooling System Draining ..... *
- Cooling System Refill ..... *
- Cooling Water Pipes or Hoses ..... *
- Thermostat Removal and Installation ..... *
- Thermostat Inspection ..... *
- Radiator Removal and Installation 6B-2
- Radiator Inspection ..... *
- Radiator Cleaning ..... *
- Radiator Cooling Fan Relay Inspection ..... *
- Radiator Cooling Fan Removal and Installation ..... *
- Radiator Cooling Fan Inspection for M/T Vehicle 6B-3
- Radiator Cooling Fan Inspection for A/T Vehicle 6B-3
- Water Pump/Generator Drive Belt Removal and Installation ..... *
- Water Pump Removal and Installation ..... *
- Water Pump Inspection ..... *
- Engine Coolant Temperature Sensor (ECT Sensor) Removal and Installation ..... *
- Engine Coolant Temperature Sensor (ECT Sensor) Inspection ..... *

Required Service Material ..... *

Tightening Torque Specification ..... *

On-Vehicle Service

WARNING:
- **Check to make sure that engine coolant temperature is cold before removing any part of cooling system.**
- **Also be sure to disconnect negative cord from battery terminal before removing any part.**

Radiator Removal and Installation

Removal

1) Disconnect negative cable at battery.
2) Drain engine coolant referring to “Cooling System Draining” in this section.
3) Remove cooling fan assembly referring to “Radiator Cooling Fan Removal and Installation” in this section.

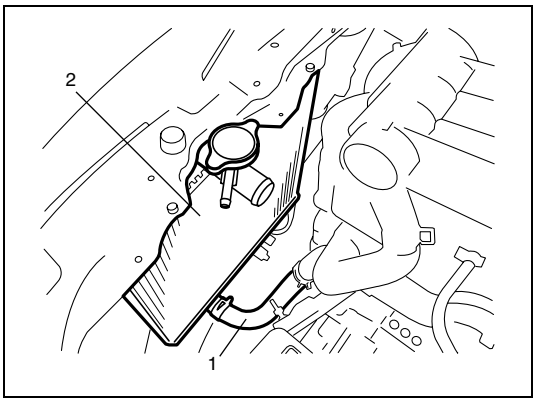

4) Remove radiator outlet hose (1) from radiator (2).
5) Disconnect A/T fluid hoses from radiator (for A/T model).
6) Remove radiator (2) from vehicle.

Installation

Reverse removal procedures noting the followings.
- Refill cooling system referring to step 7) to 22) of “Cooling System Flush and Refill” in this section.
- After installation, check each joint for leakage.

Radiator Cooling Fan Inspection for M/T Vehicle

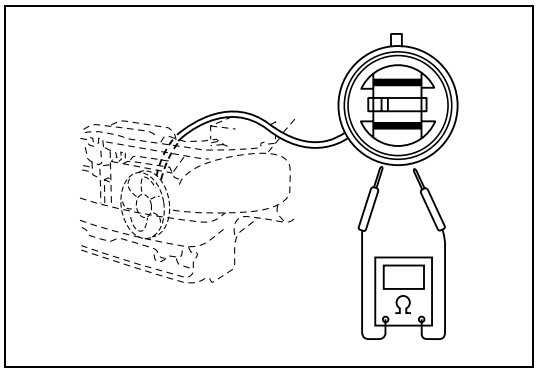

1) Check continuity between terminals. If there is no continuity, replace radiator fan motor.

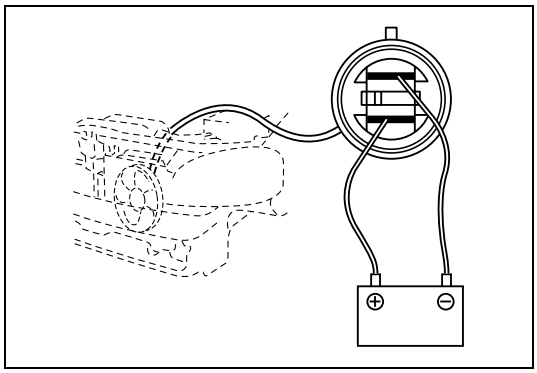

2) Connect battery to radiator fan motor coupler as shown in figure, then check that the radiator fan motor operates smoothly. If radiator fan motor does not operate smoothly, replace motor.

Radiator cooling fan motor specified current at 12 V
10.0 A maximum

Radiator Cooling Fan Inspection for A/T Vehicle

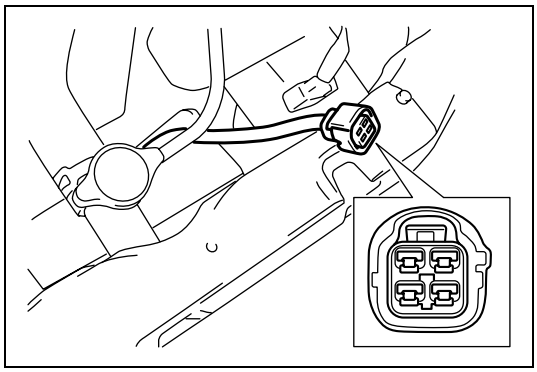

1) Check continuity between terminals.
If there is no continuity, replace radiator fan motor.

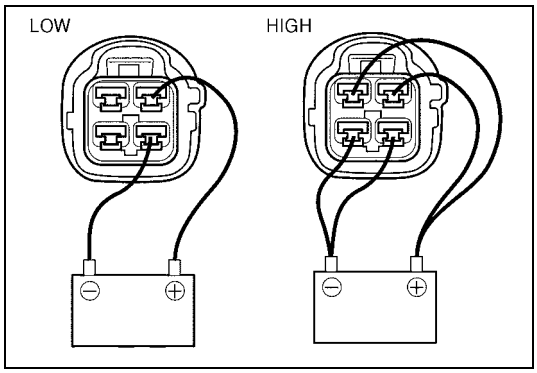

2) Connect battery to radiator fan motor coupler as shown in figure, then check that the radiator fan motor operates smoothly, fan speed varies and that specified current.
If radiator fan motor does not operate smoothly, replace motor.

Radiator cooling fan motor specified current at 12 V
LOW : 10 A maximum
HIGH : 15 A maximum

SECTION 6E1

ENGINE AND EMISSION CONTROL SYSTEM (M15 ENGINE)

WARNING:

For vehicles equipped with a Supplemental Restraint (Air Bag) System:

- **Service on and around the air bag system components or wiring must be performed only by an authorized SUZUKI dealer. Refer to "System Components and Wiring Location View and Connectors" under "General Description" in Section 10B in order to confirm whether you are performing service on or near the air bag system components or wiring. Please observe all WARNINGS and "Service Precautions" under "On-Vehicle Service" in Section 10B before performing service on or around the air bag system components or wiring. Failure to follow WARNINGS could result in unintentional activation of the system or could render the system inoperative. Either of these two conditions may result in severe injury.**
- **Technical service work must be started at least 90 seconds after the ignition switch is turned to the "LOCK" position and the negative cable is disconnected from the battery. Otherwise, the system may be activated by reserve energy in the Sensing and Diagnostic Module (SDM).**

NOTE:

For the items with asterisk (*) in the "CONTENTS" below, refer to the same section of the Service Manual mentioned in "Foreword" of this manual.

CONTENTS

General Description 6E1-3
- Engine and Emission Control System Construction 6E1-3
- Air Intake System Description ..... *
- Fuel Delivery System Description ..... *
- Electronic Control System Description 6E1-7

On-Vehicle Service 6E1-13
- Accelerator cable adjustment ..... *
- Idle speed/idle air control (IAC) duty inspection 6E1-13
- Air Intake System ..... *
  - Throttle body components ..... *
  - Throttle body on-vehicle inspection ..... *
  - Throttle body removal and installation ..... *
  - Throttle body cleaning ..... *
  - Idle air control (IAC) valve removal and installation ..... *
  - Idle air control (IAC) valve inspection ..... *
  - Oil control valve removal and installation ..... *
  - Oil control valve inspection ..... *
- Fuel Delivery System ..... *
  - Fuel pressure inspection ..... *
  - Fuel pump with pressure regulator on-vehicle inspection ..... *
  - Fuel pump with pressure regulator removal and installation ..... *
  - Fuel pump with pressure regulator inspection ..... *
  - Fuel injector on-vehicle inspection ..... *
  - Fuel injector removal and installation ..... *
  - Fuel injector inspection ..... *
- Electronic Control System ..... *
  - Engine control module (ECM) removal and installation ..... *
  - Manifold absolute pressure sensor (MAP sensor) inspection ..... *
  - Throttle position sensor (TP sensor) on-vehicle inspection ..... *
  - Throttle position sensor (TP sensor) removal and installation ..... *
  - Engine coolant temperature sensor (ECT sensor) removal and installation ..... *
  - Engine coolant temperature sensor (ECT sensor) inspection ..... *

Heated oxygen sensor (HO2S-1 and HO2S-2) heater on-vehicle inspection ..... *
Heated oxygen sensor (HO2S-1 and HO2S-2) removal and installation ..... *
Camshaft position sensor (CMP sensor) inspection ..... *
Camshaft position sensor (CMP sensor) removal and installation ..... *
Crankshaft position sensor (CKP sensor) inspection ..... *
Crankshaft position sensor (CKP sensor) removal and installation ..... *
Fuel Level Sensor Removal and Installation ..... *
Fuel Level Sensor Inspection ..... *
Vehicle speed sensor (VSS) inspection ..... *
Vehicle speed sensor (VSS) removal and installation ..... *
Knock sensor inspection ..... *
Knock sensor removal and installation ..... *
Main relay, fuel pump relay and radiator fan relay inspection ..... *
Fuel cut operation inspection ..... *
Radiator fan control system inspection ..... *
Mass air flow (MAF) and intake air temperature (IAT) sensor on-vehicle inspection ..... *
Mass air flow (MAF) and intake air temperature (IAT) sensor removal and installation ..... *
Mass air flow (MAF) and intake air temperature (IAT) sensor inspection ..... *
Emission Control System ..... *
EGR system inspection ..... *
EGR valve removal and installation ..... *
EGR valve inspection ..... *
Evaporative emission control system inspection ..... *
PCV system inspection ..... *

General Description

Engine and Emission Control System Construction

The engine and emission control system is divided into 4 major sub-systems: air intake system, fuel delivery system, electronic control system and emission control system.
Air intake system includes air cleaner, throttle body, IAC valve and intake manifold.
Fuel delivery system includes fuel pump, delivery pipe, etc. Electronic control system includes ECM, various sensors and controlled devices.
Emission control system includes EGR, EVAP and PCV system.

Engine and Emission Control System Flow Diagram

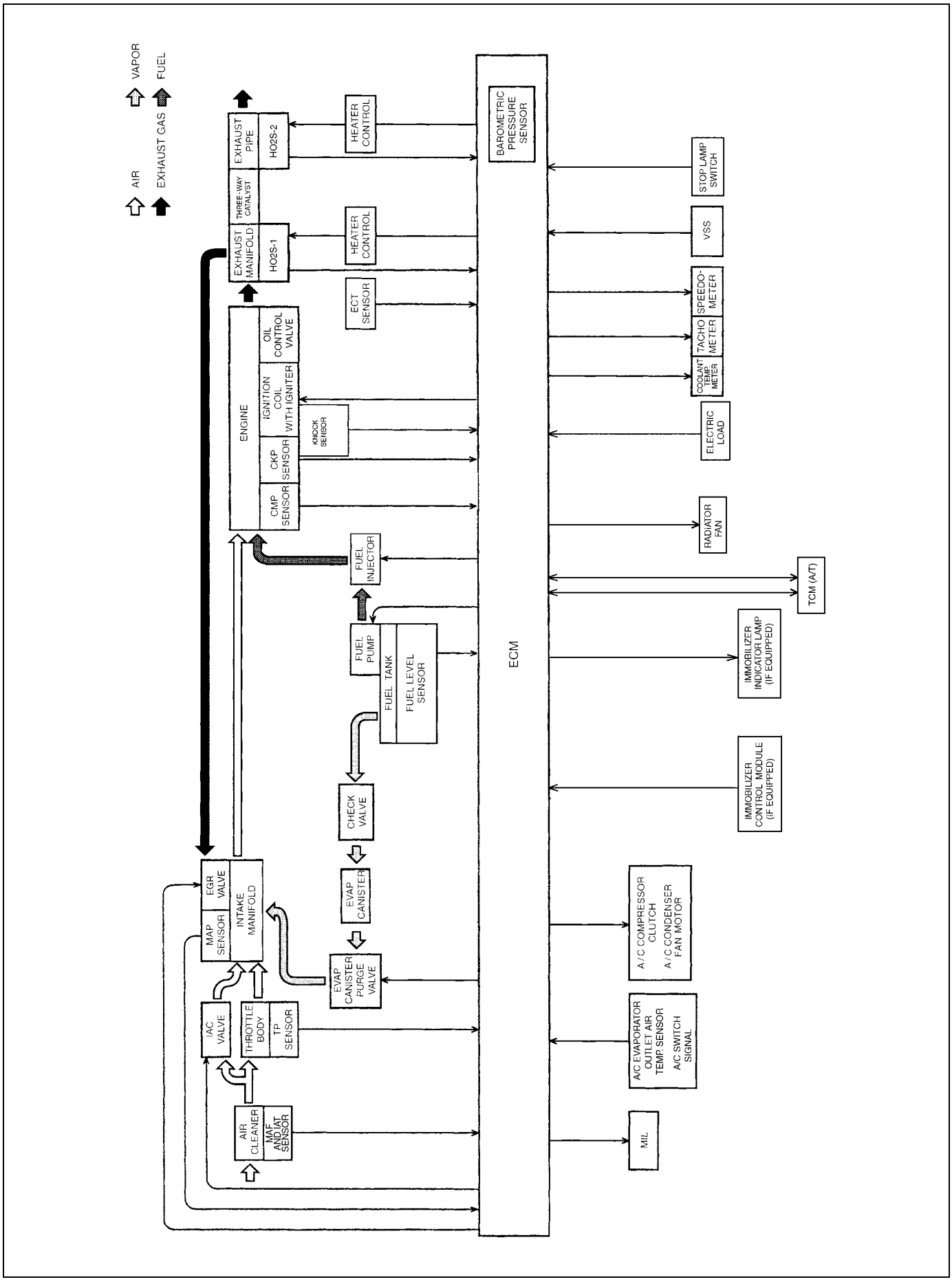

Engine and Emission Control System Diagram

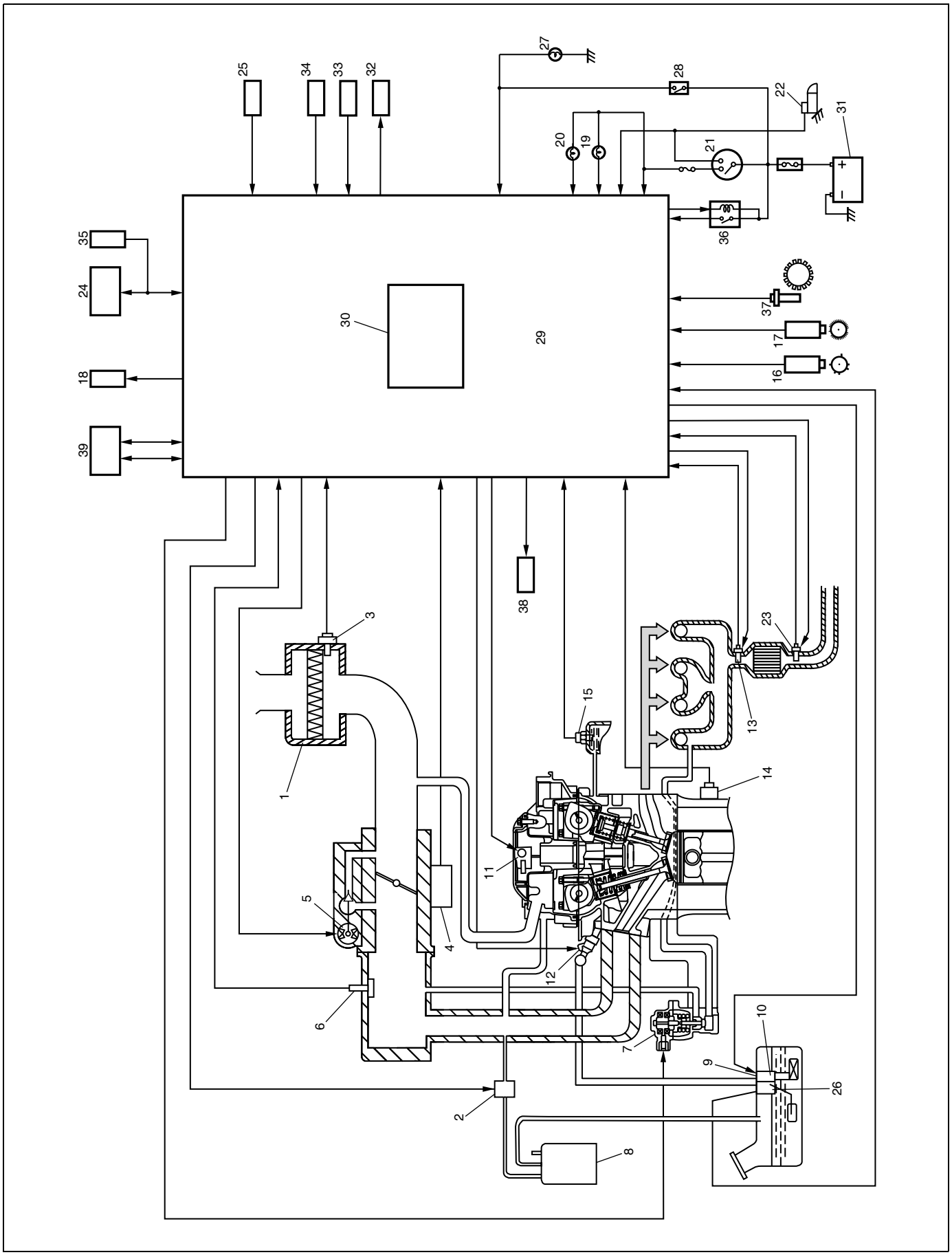

1. Air Cleaner	14. Knock sensor	27. Stop lamp
2. EVAP canister purge valve	15. ECT sensor	28. Stop lamp switch
3. MAF and IAT sensor	16. CMP sensor	29. ECM
4. TP sensor	17. CKP sensor	30. Barometric pressure sensor (if equipped)
5. IAC valve	18. Radiator fan	31. Battery
6. MAP sensor	19. Malfunction indicator lamp in combination meter	32. A/C compressor and condenser fan relay (if equipped)
7. EGR valve	20. Immobilizer indicator lamp in combination meter	33. A/C switch (if equipped)
8. EVAP canister	21. Ignition switch	34. A/C evaporator outlet air temp. sensor (if equipped)
9. Tank pressure control valve (built-in fuel pump)	22. Starter magnetic switch	35. Immobilizer control module (if equipped)
10. Fuel pump (with pressure regulator)	23. Heated Oxygen Sensor–2 (HO2S–2)	36. Main relay
11. Ignition coil assembly	24. DLC	37. VSS
12. Fuel injector	25. Electric load	38. Oil control valve
13. Heated Oxygen Sensor–1 (HO2S–1)	26. Fuel level sensor	39. TCM (A/T)

Electronic Control System Description

The electronic control system consists of 1) various sensors which detect the state of engine and driving conditions, 2) ECM which controls various devices according to the signals from the sensors and 3) various controlled devices.
Functionally, it is divided into nine sub systems:

- Fuel injection control system
- Idle speed control system
- Fuel pump control system
- A/C control system (if equipped)
- Radiator fan control system
- EGR system
- Evaporative emission control system
- Oxygen sensor heater control system
- Ignition control system

ECM (Engine Control Module) and TCM (Transmission Control Module) intercommunicate by CAN (Controller Area Network). (For A/T vehicle only)

Electronic Control System Component Location

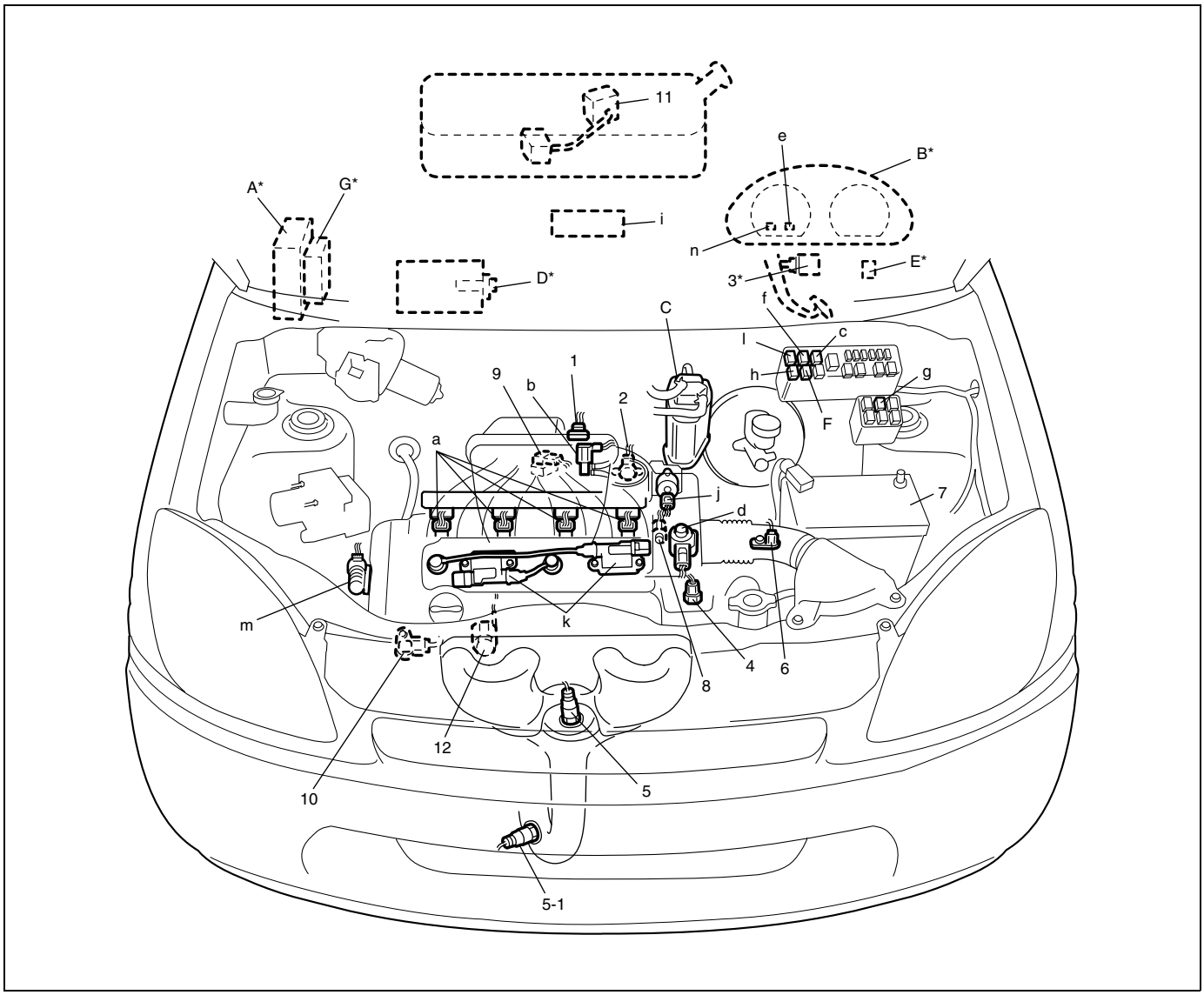

INFORMATION SENSORS	CONTROL DEVICES	OTHERS
1. MAF and IAT sensor	a: Fuel injector	A: ECM
2. TP sensor	b: EVAP canister purge valve	B: Combination meter
3. Stop lamp switch	c: Fuel pump relay	C: EVAP canister
4. ECT sensor	d: EGR valve	D: A/C evaporator outlet air temp. sensor (if equipped)
5. Heated oxygen sensor–1	e: Malfunction indicator lamp	E: Data link connector
5-1. Heated oxygen sensor–2	f: A/C condenser fan relay No.1 (if equipped)	F: A/C compressor relay (if equipped)
6. VSS	g: A/C condenser fan relay No.2 (if equipped)	G: TCM (A/T)
7. Battery	h: Radiator fan relay	
8. CMP sensor	i: Fuel cost meter	
9. MAP sensor	j: IAC valve	
10. CKP sensor	k: Ignition coil assembly (with ignitor)	
11. Fuel level sensor	l: Main relay	
12. Knock sensor	m: Oil control valve	
	n: Immobilizer indicator lamp	

NOTE:

Above figure shows left-hand steering vehicle. For right-hand steering vehicle, parts with (*) are installed at the opposite side.

ECM Input/Output Circuit Diagram

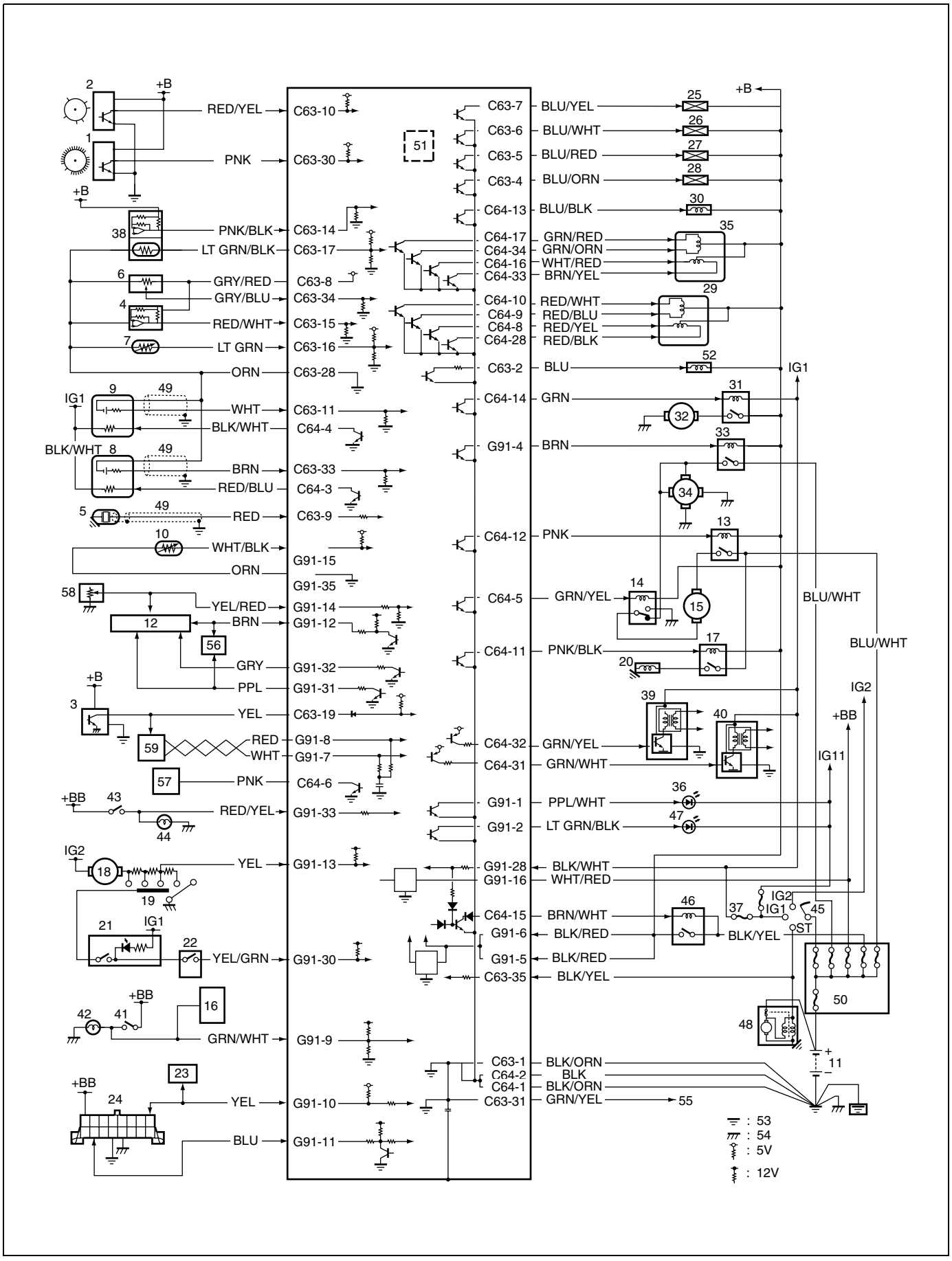

1. CKP sensor	21. A/C switch	41. Stop lamp switch
2. CMP sensor	22. A/C pressure switch	42. Stop lamp
3. VSS	23. Immobilizer control module	43. Lighting switch
4. MAP sensor	24. Data link connector	44. Position lamp
5. Knock sensor	25. Injector No.1	45. Ignition switch
6. TP sensor	26. Injector No.2	46. Main relay
7. ECT sensor	27. Injector No.3	47. Immobilizer indicator lamp
8. Heated oxygen sensor–2	28. Injector No.4	48. Starting motor
9. Heated oxygen sensor–1	29. IAC valve	49. Shield wire
10. A/C evaporator outlet air temp. sensor	30. EVAP canister purge valve	50. Main fuse
11. Battery	31. Fuel pump relay	51. Barometric pressure sensor
12. Combination meter	32. Fuel pump	52. Oil control valve
13. A/C condenser fan relay No.1	33. Radiator fan relay	53. Engine ground
14. A/C condenser fan relay No.2	34. Radiator fan motor	54. Body ground
15. A/C condenser fan motor	35. EGR valve	55. Shield ground
16. ABS control module	36. Malfunction indicator lamp	56. EPS control module
17. A/C compressor relay	37. “IG” fuse	57. Fuel cost meter in multi information display
18. Heater fan motor	38. MAF and IAT sensor	58. Fuel level sensor
19. Heater fan switch	39. Ignition coil assembly (for No.1 and No.4 spark plugs)	59. TCM (A/T)
20. A/C compressor clutch	40. Ignition coil assembly (for No.2 and No.3 spark plugs)	

ECM Terminal Arrangement Table

CONNECTOR	TERMINAL	WIRE COLOR	CIRCUIT
C64	1	BLK/ORN	Ground for ECM
	2	BLK	Ground for ECM
	3	RED/BLU	Heater output of heated oxygen sensor–2
	4	BLK/WHT	Heater output of heated oxygen sensor–1
	5	GRN/YEL	A/C condenser fan motor relay No.2 output (if equipped)
	6	PNK	Fuel cost output
	7	–	–
	8	RED/YEL	IAC valve output (stepper motor coil 3)
	9	RED/BLU	IAC valve output (stepper motor coil 2)
	10	RED/WHT	IAC valve output (stepper motor coil 1)
	11	PNK/BLK	A/C compressor relay output (if equipped)
	12	PNK	A/C condenser fan motor relay No.1 output (if equipped)
	13	BLU/BLK	EVAP canister purge valve output
	14	GRN	Fuel pump relay output
	15	BRN/WHT	Main power supply relay output
	16	WHT/RED	EGR valve (stepper motor coil 3) output
	17	GRN/RED	EGR valve (stepper motor coil 1) output
	18	–	–
	19	–	–
	20	–	–
	21	–	–
	22	–	–
	23	–	–
	24	–	–
	25	–	–
	26	–	–
	27	–	–
	28	RED/BLK	IAC valve output (stepper motor coil 4)
	29	–	–
	30	–	–
	31	GRN/WHT	Ignition coil No.2 and No.3 output
	32	GRN/YEL	Ignition coil No.1 and No.4 output
	33	BRN/YEL	EGR valve (stepper motor coil 4) output
	34	GRN/ORN	EGR valve (stepper motor coil 2) output
C63	1	BLK/ORN	Ground for ECM
	2	BLU	Oil control valve output
	3	–	–
	4	BLU/ORN	Fuel injector No.4 output
	5	BLU/RED	Fuel injector No.3 output
	6	BLU/WHT	Fuel injector No.2 output
	7	BLU/YEL	Fuel injector No.1 output
	8	GRY/RED	Output of 5V power source for throttle position (TP) sensor
	9	RED	Knock sensor signal
	10	RED/YEL	Reference signal for CMP sensor
	11	WHT	Oxygen signal of heated oxygen sensor–1
	12	–	–
	13	–	–
	14	PNK/BLK	Mass air flow (MAF) sensor signal
	15	RED/WHT	Manifold absolute pressure (MAP) sensor signal
	16	LT GRN	Engine coolant temp. (ECT) sensor signal
	17	LT GRN/BLK	Intake air temperature (IAT) sensor signal
	18	–	–
	19	YEL	Vehicle speed sensor signal
	20	–	–
	21	–	–
C63	22	–	–
	23	–	–
	24	–	–
	25	–	–
	26	–	–
	27	–	–
	28	ORN	Ground for sensors
	29	–	–
	30	PNK	CKP sensor signal
	31	GRN/YEL	Ground of ECM for shield wire
	32	–	–
	33	BRN	Oxygen signal of heated oxygen sensor–2
	34	GRY/BLU	Throttle position (TP) sensor signal
	35	BLK/YEL	Starting motor signal
G91	1	PPL/WHT	MIL (Malfunction indicator lamp) output
	2	LT GRN/BLK	Immobilizer indicator lamp output (if equipped)
	3	–	–
	4	BRN	Radiator fan motor relay output
	5	BLK/RED	Main power supply
	6	BLK/RED	Main power supply
	7	WHT	CAN communication line (active low signal)
	8	RED	CAN communication line (active high signal)
	9	GRN/WHT	Electric load signal for stop lamp
	10	YEL	Serial communication line of data link connector 5 V
	11	BLU	Serial communication line of data link connector 12 V
	12	BRN	Engine revolution signal output for tachometer
	13	YEL	Electric load signal for heater blower motor
	14	YEL/RED	Fuel level sensor signal
	15	WHT/BLK	A/C evaporator outlet air temp. sensor signal (if equipped)
	16	WHT/RED	Power source for ECM internal memory
	17	–	–
	18	–	–
	19	–	–
	20	–	–
	21	–	–
	22	–	–
	23	–	–
	24	–	–
	25	–	–
	26	–	–
	27	–	–
	28	BLK/WHT	Ignition switch signal
	29	–	–
	30	YEL/GRN	A/C request signal (if equipped)
	31	PPL	Vehicle speed sensor signal for speedometer
	32	GRY	ECT sensor signal for combination meter
	33	RED/YEL	Electric load signal for clearance lamp
	34	–	–
	35	ORN	Ground for A/C evaporator outlet air temp. sensor (if equipped)

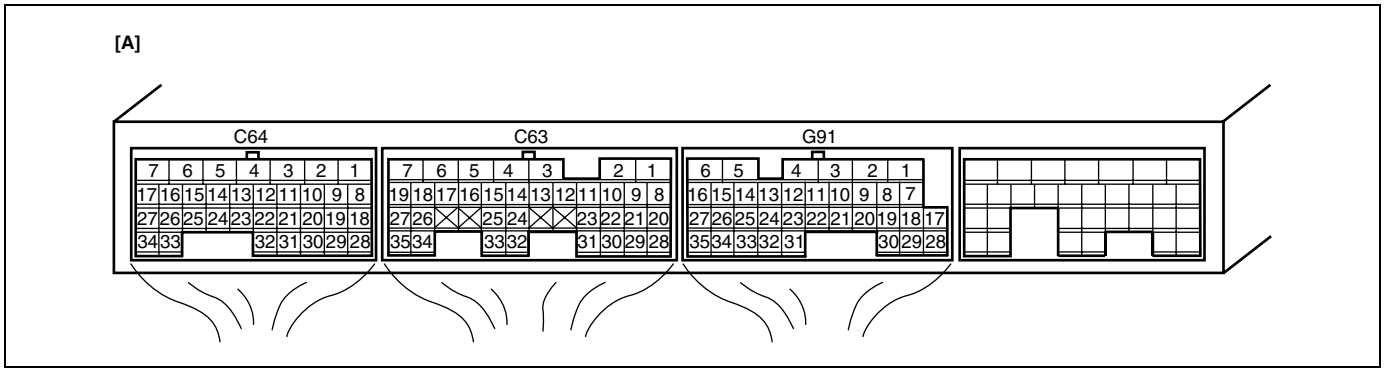

[A]: Terminal arrangement of ECM coupler (viewed from harness side)

NOTE:

For abbreviation of wire color, refer to "Abbreviations and Symbols May be Used in This Manual" in Section 0A.

On-Vehicle Service

Idle speed/idle air control (IAC) duty inspection

Before idle speed/IAC duty check, make sure of the following.

- Lead wires and hoses of Electronic Fuel Injection and engine emission control systems are connected securely.
- Accelerator cable has some play, that is, it is not tight.
- Valve lash is checked according to maintenance schedule.
- Ignition timing is within specification.
- All accessories (wipers, heater, lights, A/C, etc.) are out of service.
- Air cleaner has been properly installed and is in good condition.
- No abnormal air inhaling from air intake system.

After above items are all confirmed, check idle speed and IAC duty as follows.

NOTE:

Before starting engine, place transmission gear shift lever in "Neutral" (shift selector lever to "P" range for A/T vehicle), and set parking brake and block drive wheels.

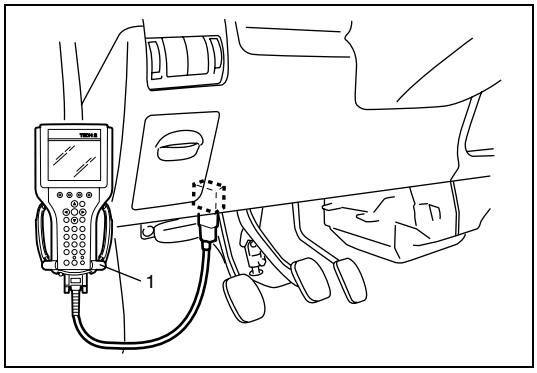

1) Connect scan tool (1) to DLC with ignition switch OFF.

2) Warm up engine to normal operating temperature.
3) Check engine idle speed and "IAC duty" by using "Data List" mode on scan tool to check "IAC duty".
4) If duty and/or idle speed is out of specifications, inspect idle air control system referring to "Diagnostic Flow Table B-4 Idle Air Control System Check" in Section 6.

Engine idle speed and IAC duty

	A/C OFF	A/C ON
M/T vehicle	700 ± 50 r/min (rpm) 10 – 55%	850 ± 50 r/min (rpm)
A/T vehicle at P/N range	700 ± 50 r/min (rpm) 10 – 55%	850 ± 50 r/min (rpm)

5) Check that specified engine idle speed is obtained with A/C ON if vehicle is equipped with A/C.
   If not, check A/C request signal circuit and idle air control system.

SECTION 7A2

MANUAL TRANSAXLE (M15 ENGINE MODEL)

WARNING:

For vehicles equipped with a Supplemental Restraint (Air Bag) System :

- **Service on and around the air bag system components or wiring must be performed only by an authorized SUZUKI dealer. Refer to "Air Bag System Components and Wiring Location View" under "General Description" in air bag system section in order to confirm whether you are performing service on or near the air bag system components or wiring. Please observe all WARNINGS and "Service Precautions" under "On-Vehicle Service" in air bag system section before performing service on or around the air bag system components or wiring. Failure to follow WARNINGS could result in unintentional activation of the system or could render the system inoperative. Either of these two conditions may result in severe injury.**
- **Technical service work must be started at least 90 seconds after the ignition switch is turned to the "LOCK" position and the negative cable is disconnected from the battery. Otherwise, the system may be activated by reserve energy in the Sensing and Diagnostic Module (SDM).**

CONTENTS

General Description 7A2-2
- Manual Transaxle Construction and Servicing 7A2-2
- Construction Diagram of 2WD Transaxle 7A2-3
- Construction Diagram of 4WD Transaxle 7A2-4

Diagnosis 7A2-5
- Manual Transaxle Symptom Diagnosis 7A2-5

On-Vehicle Service 7A2-6
- Manual Transaxle Oil Change 7A2-6
- Differential Side Oil Seal Replacement 7A2-6
- Gear Shift Control Lever and Cable Components 7A2-8
- Gear Shift Control Lever and Cable Removal and Installation 7A2-9
- Gear Shift Control Lever and Cable Adjustment 7A2-10
- Vehicle Speed Sensor (VSS) Removal and Installation 7A2-11
- Back Up Lamp Switch Removal and Installation 7A2-12
- Back Up Lamp Switch Inspection 7A2-12

Unit Repair Overhaul 7A2-13
- Transaxle Unit Components 7A2-13
- Transaxle Unit Dismounting and Remounting 7A2-14
- Transaxle Case Components 7A2-16
- Gear Shift and Select Shaft Assembly Components 7A2-18
- Gear Shift and Select Shaft Assembly Removal and Installation 7A2-18
- Gear Shift and Select Shaft Disassembly and Assembly 7A2-20
- Fifth Gear Disassembly and Assembly 7A2-20
- Gear Shift Shaft, Input Shaft and Counter Shaft Removal and Installation 7A2-25
- Transaxle Right Case Disassembly and Assembly 7A2-31
- Transaxle Left Case Disassembly and Assembly 7A2-32
- Input & Counter Shaft Components 7A2-34
- Input Shaft Disassembly and Assembly 7A2-35
- Counter Shaft Disassembly and Assembly 7A2-38
- Gear Shift Shaft Components 7A2-42
- High Speed and Low Speed Gear Shift Shafts Inspection 7A2-42
- 5th & Reverse Gear Shift Shafts Disassembly and Assembly 7A2-43
- Differential Components 7A2-43
- Differential Disassembly and Assembly 7A2-44
- Differential Adjustment 7A2-45

Tightening Torque Specification 7A2-47

Required Service Material 7A2-48

Special Tool 7A2-49

General Description

Manual Transaxle Construction and Servicing

The transaxle provides five forward speeds and one reverse speed by means of three synchromesh and three shafts-input shaft, counter shaft and reverse gear shaft. All forward gears are in constant mesh, and reverse uses a sliding idler gear arrangement.

The low speed sleeve & hub is mounted on counter shaft and engaged with counter shaft 1st gear or 2nd gear, while the high speed sleeve & hub is done on input shaft and engaged with input shaft 3rd gear or 4th gear.

The 5th speed sleeve & hub on input shaft is engaged with input shaft 5th gear mounted on the input shaft.

To prevent the cracking noise from the reverse gear when shifting transaxle gear into the reverse gear, the reverse shift braking device is used.

The device utilizes the 5th synchromesh, which is the lever synchro type, to apply the brake on the input shaft rotation.

The double cone synchronizing mechanism is provided to 2nd gear synchromesh device for high performance of shifting to 2nd gear.

The counter shaft turns the final gear and differential assembly, thereby turning the front drive shafts which are attached to the front wheels.

4WD model is equipped with transfer assembly on transaxle being mated to right side of differential output in transaxle.

For servicing, it is necessary to use genuine sealant or its equivalent on mating surfaces of transaxle case which is made of aluminum. The case fastening bolts must be tightened to specified torque by means of torque wrench. It is also important that all parts are thoroughly cleaned with cleaning fluid and air dried before reassembling.

Further, care must be taken to adjust preload of counter shaft taper roller bearings. New synchronizer rings are prohibited from being lapped with respective gear cones by using lapping compound before they are assembled.

Construction Diagram of 2WD Transaxle

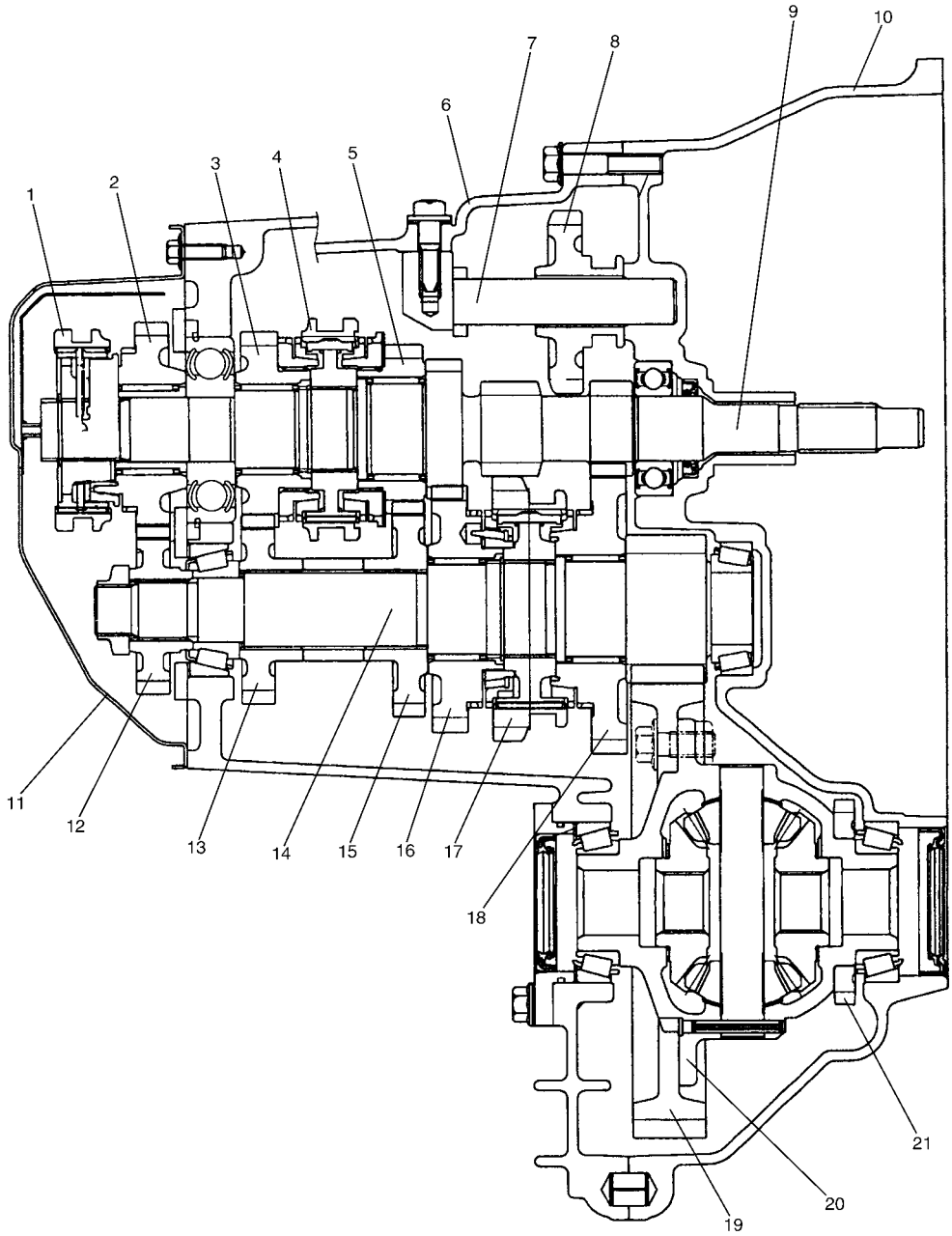

1. 5th speed sleeve & hub	8. Reverse idler gear	15. counter shaft 3rd gear
2. Input shaft 5th gear	9. Input shaft	16. counter shaft 2nd gear
3. Input shaft 4th gear	10. Right case	17. Low speed sleeve & hub
4. High speed sleeve & hub	11. Side cover	18. counter shaft 1st gear
5. Input shaft 3rd gear	12. counter shaft 5th gear	19. Final gear
6. Left case	13. counter shaft 4th gear	20. Differential case
7. Reverse gear shaft	14. counter shaft	21. Vehicle speed sensor rotor

Construction Diagram of 4WD Transaxle

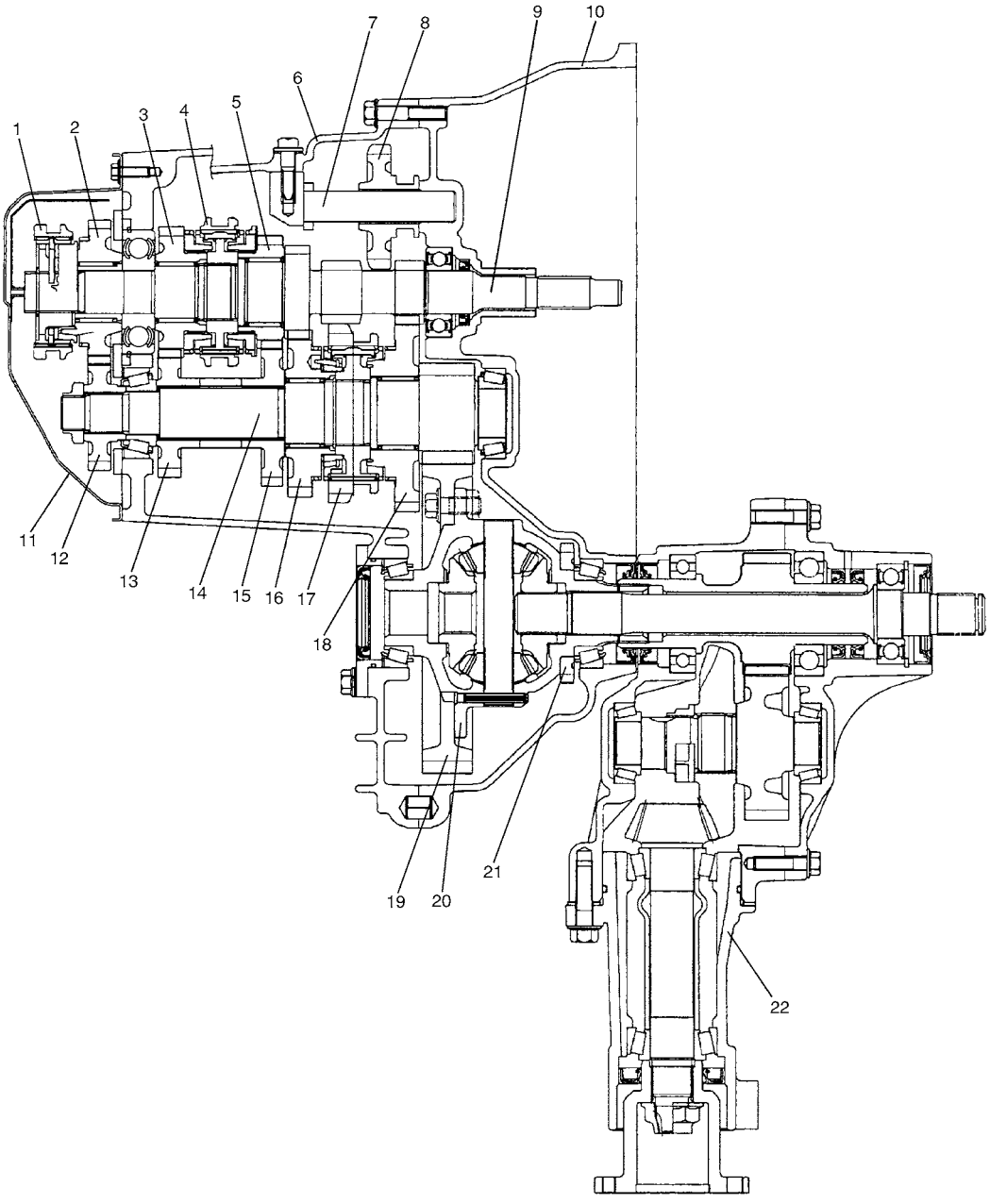

1. 5th speed sleeve & hub	7. Reverse gear shaft	13. counter shaft 4th gear	19. Final gear
2. Input shaft 5th gear	8. Reverse idler gear	14. counter shaft	20. Differential case
3. Input shaft 4th gear	9. Input shaft	15. counter shaft 3rd gear	21. Vehicle speed sensor rotor
4. High speed sleeve & hub	10. Right case	16. counter shaft 2nd gear	22. Transfer assembly
5. Input shaft 3rd gear	11. Side cover	17. Low speed sleeve & hub	
6. Left case	12. counter shaft 5th gear	18. counter shaft 1st gear	

Diagnosis

Manual Transaxle Symptom Diagnosis

Condition	Possible Cause	Correction
Gears slipping out of mesh	Maladjusted gear shift/select control cables	Adjust.
	Worn shift fork shaft	Replace.
	Worn shift fork or synchronizer sleeve	Replace.
	Weak or damaged locating springs	Replace.
	Worn bearings on input shaft or counter shaft	Replace.
	Worn chamfered tooth on sleeve and gear	Replace sleeve and gear.
Hard shifting	Maladjusted gear shift/select control cables	Adjust.
	Inadequate or insufficient lubricant	Replenish.
	Improper clutch pedal free travel	Adjust.
	Distorted or broken clutch disc	Replace.
	Damaged clutch pressure plate	Replace clutch cover.
	Worn synchronizer ring	Replace.
	Worn chamfered tooth on sleeve or gear	Replace sleeve or gear.
	Worn gear shift/select control cables joint	Replace.
	Distorted shift shaft	Replace.
Noise	Inadequate or insufficient lubricant	Replenish.
	Damaged or worn bearing(s)	Replace.
	Damaged or worn gear(s)	Replace.
	Damaged or worn synchronizer parts	Replace.
	Maladjusted backlash between bevel pinion and gear	Adjust as prescribed
	Improper tooth contact in the mesh between bevel pinion and gear	Adjust or replace

On-Vehicle Service

CAUTION:
Do not reuse circlip, spring pin, E-ring, oil seal, gasket, self locking nut and specified parts. Reuse of it can result in trouble.

Manual Transaxle Oil Change

1) Before changing or inspecting oil, be sure to stop engine and lift vehicle horizontally.
2) With vehicle lifted up, check oil level and leakage.
   If leakage exists, correct it.
3) Drain old oil and fill new specified oil by specified amount (up to level hole).
4) Apply sealant to thread of drain plug (1) and level/filler plug (2) and torque them as specified below.

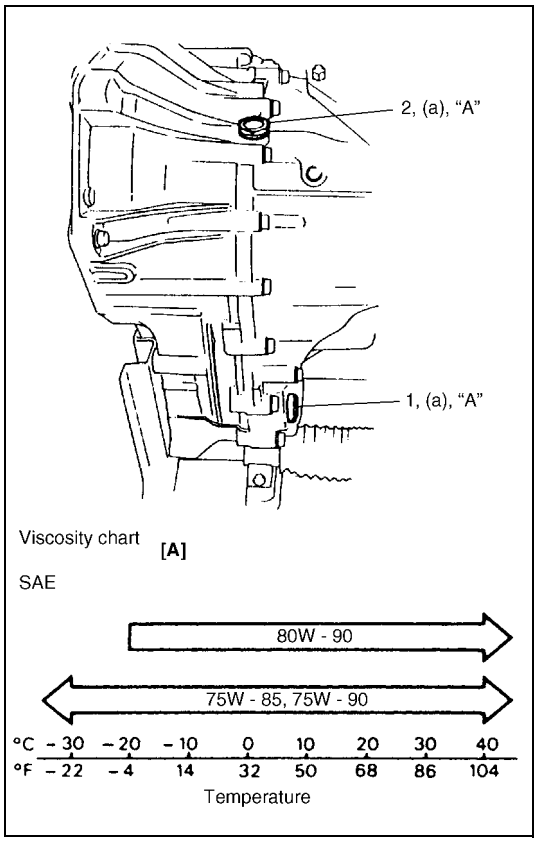

"A" : Sealant 99000-31260

Tightening torque
Transaxle oil level/filler and drain plugs
(a) : 21 N·m (2.1 kg-m, 15.5 lb-ft)

NOTE:

- **It is highly recommended to use API GL-4 75W-90 gear oil.**
- **Whenever vehicle is hoisted for any other service work than oil change, also be sure to check for oil leakage.**

Transaxle oil
: API GL-4
For SAE classification, refer to viscosity chart [A] in the figure.

Transaxle oil capacity
: 2.2 liters (4.8/3.9 US/Imp. pt.)

Differential Side Oil Seal Replacement

Replacement

1) Lift up vehicle and drain transaxle oil.
2) Remove front drive shafts referring to "Drive Shaft Assembly Removal and Installation" in Section 4A.
3) Separate transfer from transaxle assembly. (for 4WD vehicle) referring to "Transfer Dismounting and Remounting" in Section 7D.

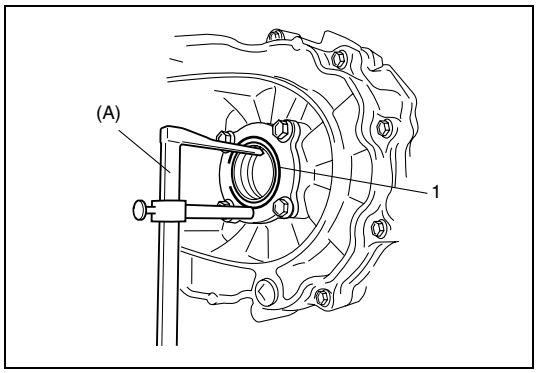

4) Remove oil seal (1) using special tool.

Special tool
(A) : 09913-50121

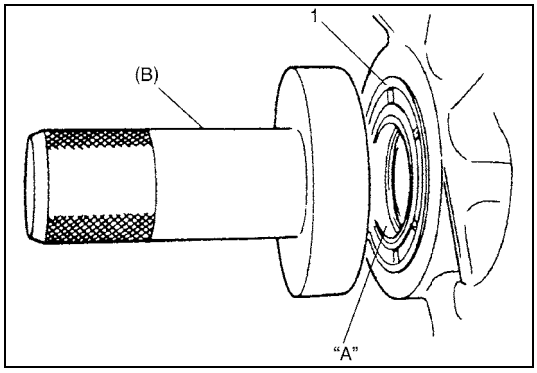

5) Install oil seal (1) facing its spring side upward.
Use special tool and hammer for installation.

Special tool
(B) : 09913-85210

6) Apply grease to oil seal lip and at the same time check drive shaft where oil seal (1) contacts and make sure of its smoothness.

"A" : Grease 99000-25010

7) Install transfer referring to "Transfer Dismounting and Remounting" in Section 7D.
8) Insert front drive shafts referring to "Drive Shaft Assembly Removal and Installation" in Section 4A.
9) Install ball stud and stabilizer mount brackets referring to "Wheel Hub and Steering Knuckle Removal and Installation" and "Stabilizer Bar and Bushings Removal and Installation" in Section 3D.
10) Install tie-rod end referring to "Suspension Control Arm/ Bushing Removal and Installation" in Section 3D.
11) Fill transaxle oil as specified referring to "Manual Transaxle Oil Change" in this section, and make sure that oil has been sealed with oil seal.

Gear Shift Control Lever and Cable Components

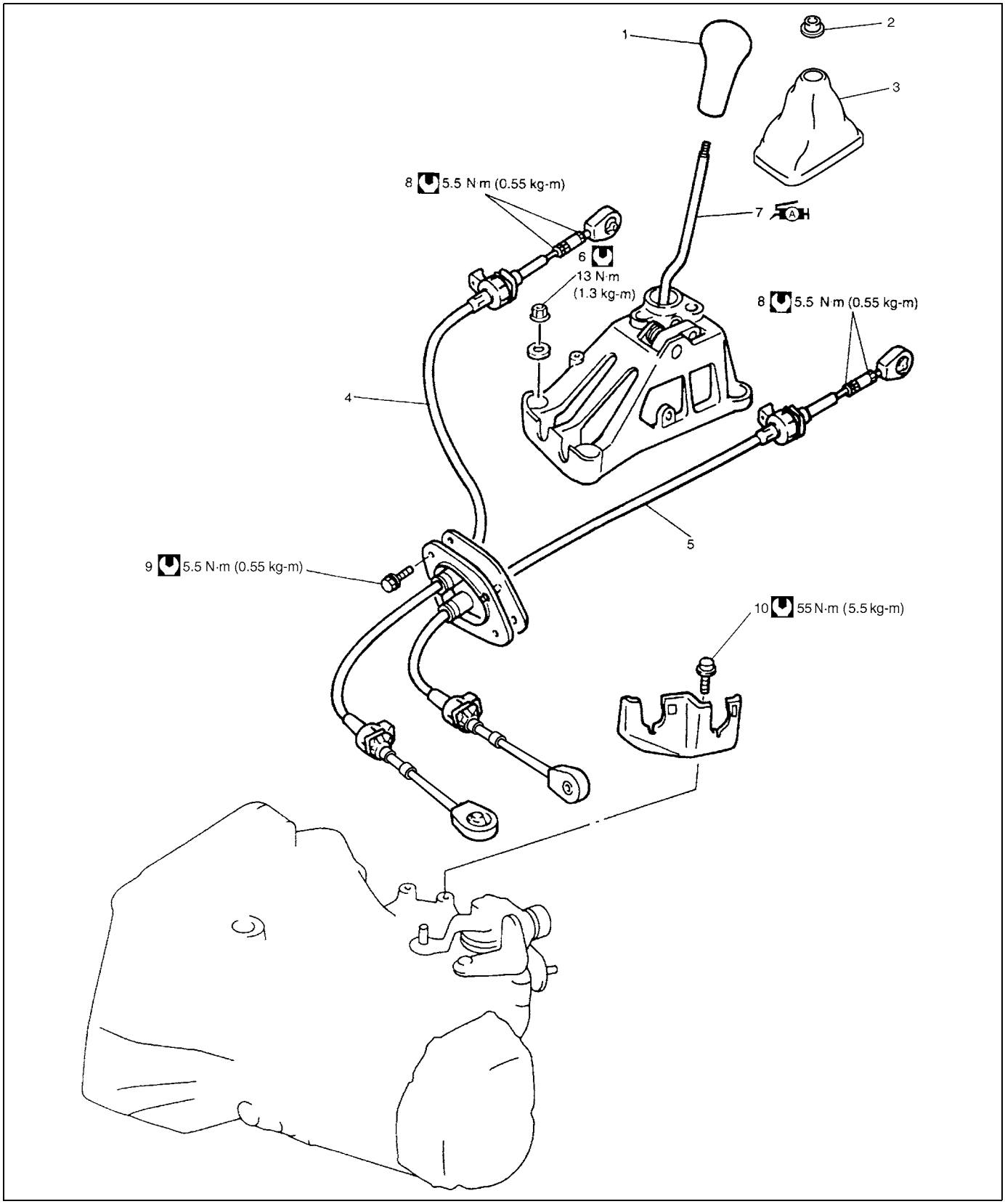

1. Gear shift control lever knob	5. Gear select control cable	9. Cable mounting bolt
2. Lever boot collar	6. Gear shift control lever assembly mounting nut	10. Cable bracket bolt
3. Gear shift lever boot	7. Gear shift control lever assembly : Apply grease 99000-25010 to pin ends to which shift and select cables are connected.	Tightening torque
4. Gear shift control cable	8. Cable lock nut	

Gear Shift Control Lever and Cable Removal and Installation

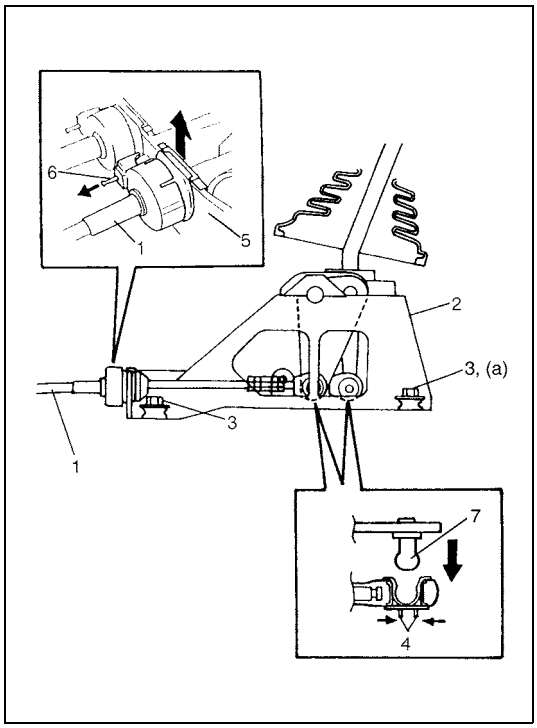

Removal

1) Remove console box.
2) Disconnect gear shift and select control cables (1) from gear shift control lever assembly (2).
   a) Disconnect cable end from pivot (7) while pushing cable end bush (4).
   b) Detach cable from bracket (5) while pulling pin (6).
3) Remove gear shift control lever assembly mounting nuts (3) and gear shift lever assembly (2) from body.
4) Disconnect shift and select cables (1) from transmission in the same manner as step 2).
5) Remove cable grommet and cable clamp, and then remove shift and select cables (1) from body.

Installation

Reverse removal procedure for installation noting the following.

- Tighten gear shift control lever assembly mounting nuts (3) to specified torque.

Tightening torque
Gear shift control lever assembly mounting nut
(a) : 13 N·m (1.3 kg-m, 9.5 lb-ft)

Gear Shift Control Lever and Cable Adjustment

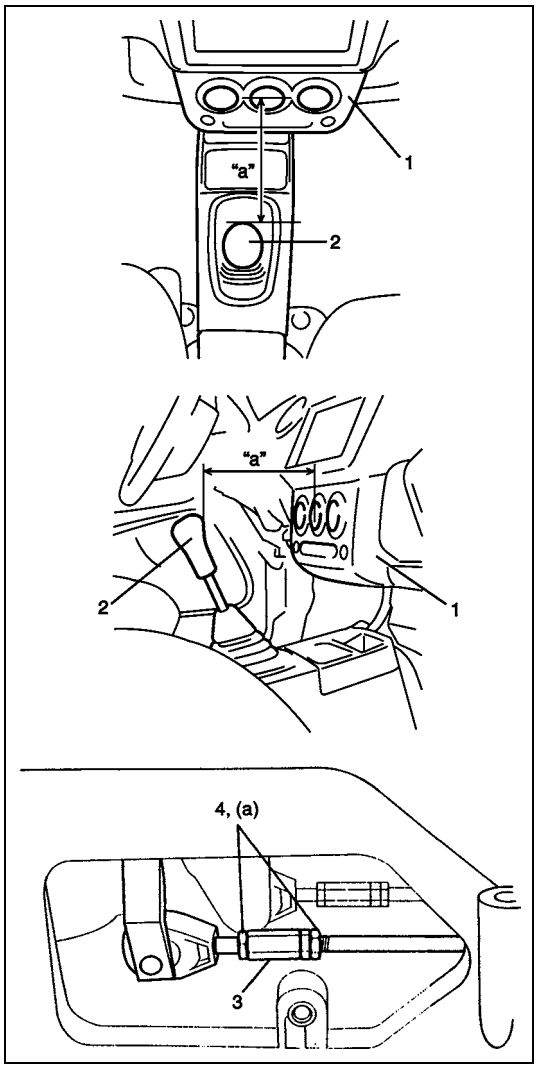

- Adjustment of shift cable:

a) With shift control lever in "NEUTRAL" position, adjust shift cable adjusting nut (3) so that distance "a" between edge of instrument panel (1) and center of shift knob (2) measured as specified value.

Distance "a" : 158 mm (6.23 in.)

b) After shift cable adjustment, tighten cable lock nut (4) to specified torque.

Tightening torque
Cable lock nut (a) : 5.5 N·m (0.55 kg-m, 4.0 lb-ft)

c) Make sure that boots are installed correctly.

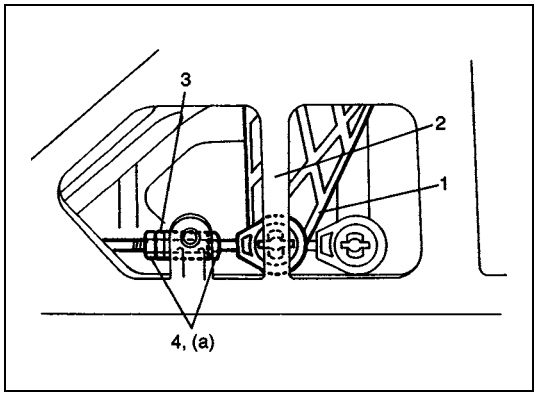

- Adjustment of select cable:

a) With shift control lever in "NEUTRAL" position, adjust select cable adjusting nut (3) so that the tip of select arm (cable joint point) (1) and the center rip of gear shift control lever assembly (2) are aligned as shown.

b) After select cable adjustment, tighten cable lock nut (4) to specified torque.

Tightening torque
Cable lock nut (a) : 5.5 N·m (0.55 kg-m, 4.0 lb-ft)

Vehicle Speed Sensor (VSS) Removal and Installation

Removal

1) Disconnect negative cable at battery.

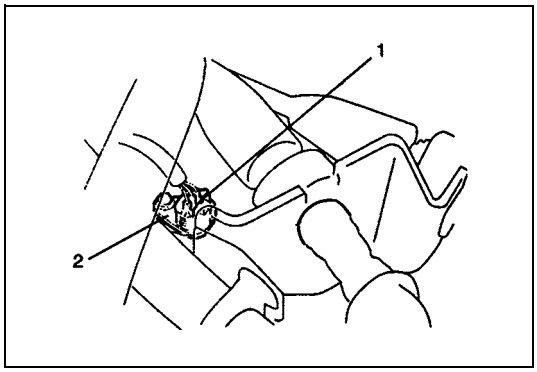

2) Disconnect VSS coupler (1).
3) Remove VSS (2).

Installation

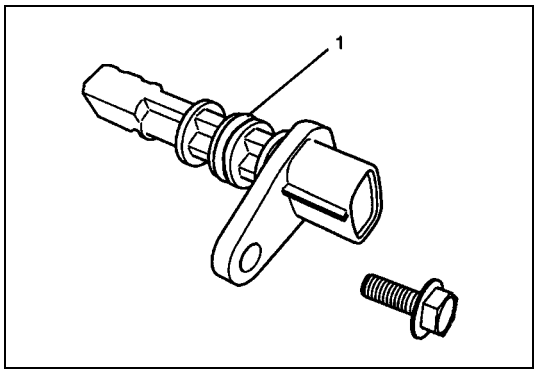

1) Apply oil to new O-ring (1) and then install VSS to transaxle.

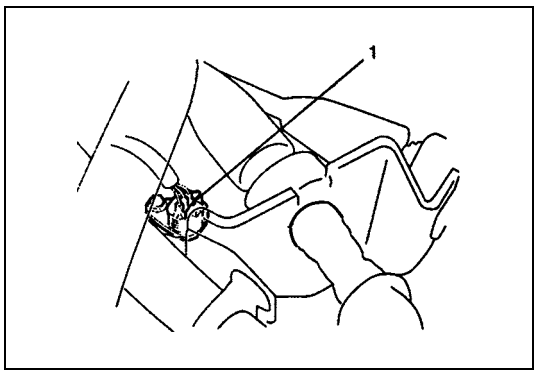

2) Connect VSS coupler (1).
3) Connect negative cable at battery.

Back Up Lamp Switch Removal and Installation

Removal

1) Disconnect negative cable at battery.

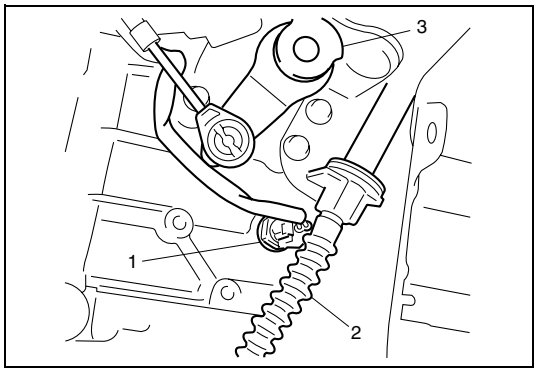

2) Disconnect back up lamp switch coupler (1).

2.	Clutch cable
3.	Gear shift and select shaft assembly

3) Remove back up lamp switch (1).

Installation

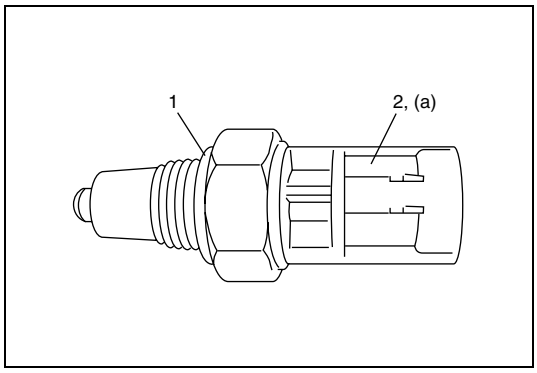

1) Apply grease to new O-ring (1) and tighten back up lamp switch (2) to specified torque.

Tightening torque
Back up lamp switch (a) : 23 N·m (2.3 kg-m, 17.0 lb-ft)

2) Connect back up lamp switch coupler (1).
3) Connect negative cable at battery.

Back Up Lamp Switch Inspection

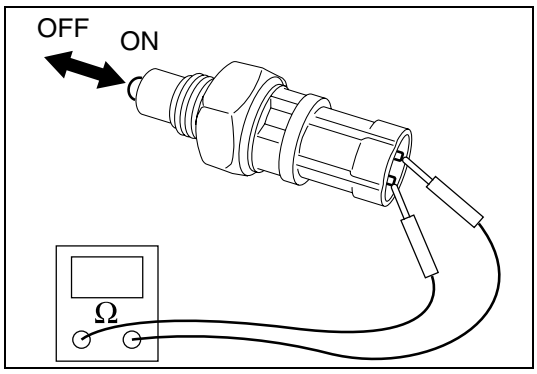

Check backup lamp switch for function using ohmmeter.

Switch ON : Continuity
Switch OFF : No continuity

Unit Repair Overhaul

Transaxle Unit Components

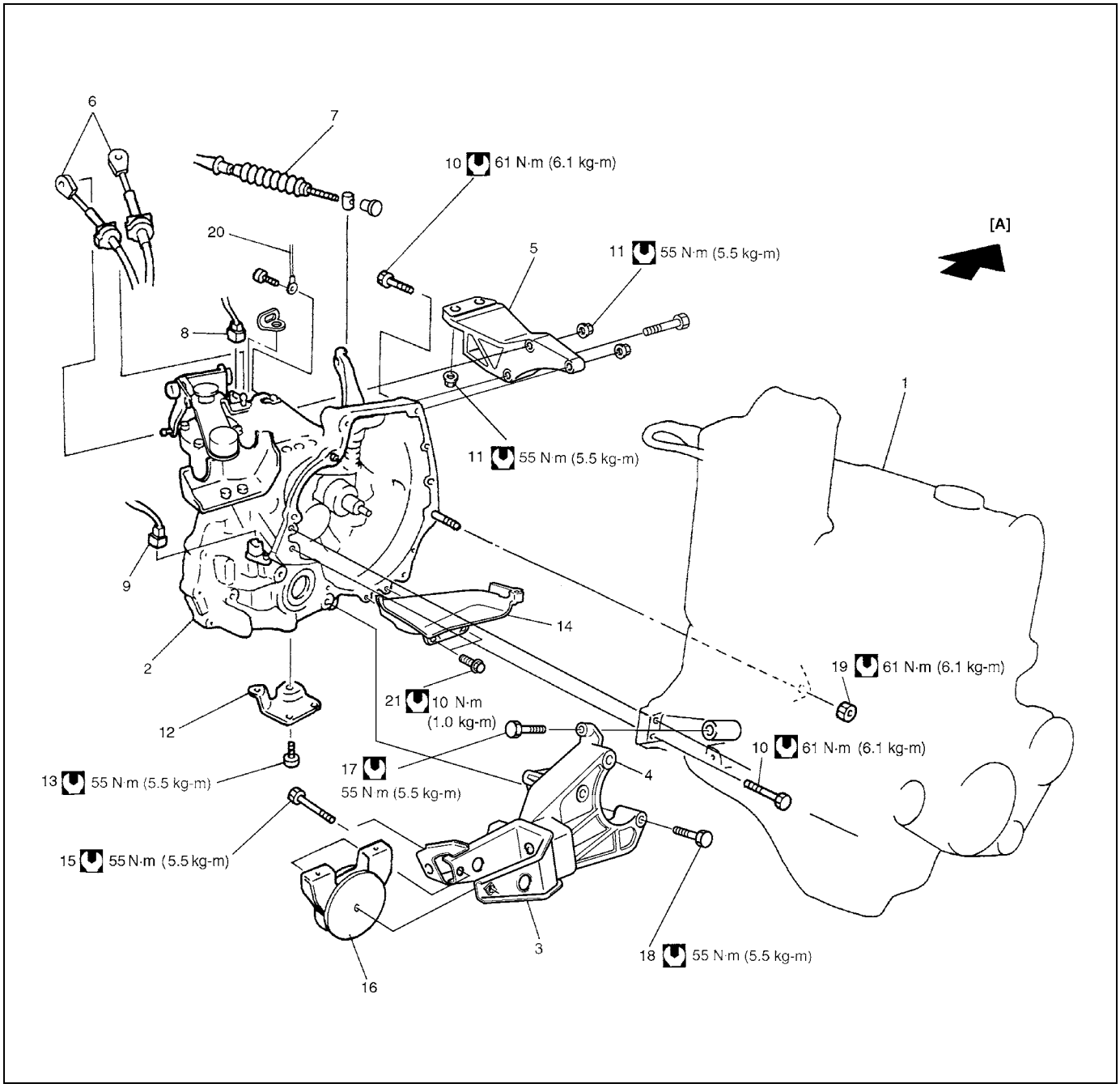

[A] : Forward	8. Backup lamp switch connector	16. Engine rear mounting
1. Engine	9. VSS connector	17. Engine rear mounting No.2 bracket bolts
2. Transaxle	10. Transaxle to engine bolts	18. Transaxle to engine rear mounting No.2 bracket bolt
3. Engine rear mounting No.1 bracket	11. Engine left mounting bracket bolt and nuts	19. Transaxle to engine nut
4. Engine rear mounting No.2 bracket	12. Engine rear mounting bracket stiffener	20. Ground cable
5. Engine left mounting bracket	13. Stiffener bolts	21. Clutch housing lower plate bolts
6. Shift & select control cables	14. Clutch housing lower plate	Tightening torque
7. Clutch cable	15. Engine rear mounting bolt	

Transaxle Unit Dismounting and Remounting

Dismounting

Under hood

1) Remove battery and tray.
2) Undo wiring harness clamps, disconnect backup lamp switch coupler, VSS coupler and ground cable.
3) Disconnect clutch cable from clutch release lever and bracket.
4) Disconnect gear shift and select control cables.
5) Remove transaxle control cable bracket.
6) Remove water pipe bracket bolts from transaxle.

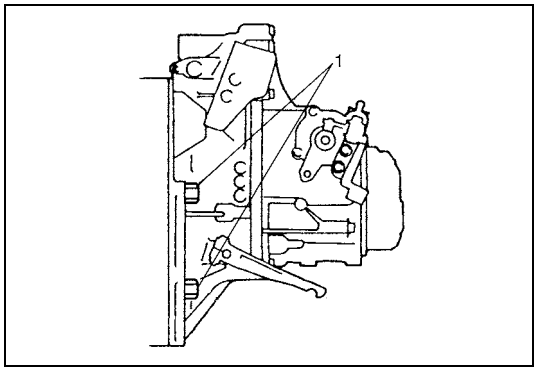

7) Remove transaxle to engine bolts (1).
8) Remove starting motor mounting bolt and nut.
9) Support engine by using lifting device.

On lift

10) Drain transaxle oil referring to “Manual Transaxle Oil Change” in this section.
11) Remove left and right front drive shaft referring to “Front Drive Shaft Assembly Removal and Installation” in Section 4A.
12) Remove center shaft referring to “Front Drive Shaft Assembly Removal and Installation” in Section 4A (for FWD model).
13) Remove left side of engine under cover.
14) Remove starting motor referring to “Starting Motor Dismounting and Remounting” in Section 6G.

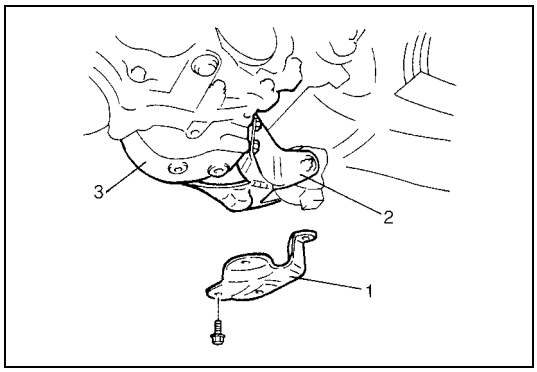

15) Remove engine rear mounting bracket stiffener (1).
16) Remove clutch housing lower plate.
17) Remove engine rear mounting No.1 bracket (2) with No.2 bracket (3).
18) Remove transfer referring to “Transfer Dismounting and Remounting” in Section 7D, if equipped.
19) Remove transaxle to engine bolts and nut.
20) Lower vehicle and support transaxle with transaxle jack.

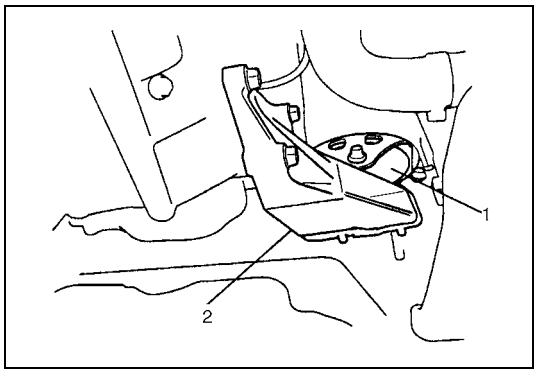

21) Remove engine left mounting (1) with bracket (2).
22) Remove other attached parts from transaxle, if any.
23) Pull transaxle out so as to disconnect input shaft from clutch disc and then lower it.

Remounting

CAUTION:
Care should be taken not to scratch oil seal lip with drive shaft while raising transaxle.
Do not hit drive shaft joint with hammer when installing it into differential gear.

Reverse dismounting procedure for remounting noting the following.

- Install transfer referring to “Transfer Dismounting and Remounting” in Section 7D, if equipped.
- Refer to “Transaxle Unit Components” for fastener specified torque.
- Push in drive shaft joints (right & left) referring to “Front Drive Shaft Assembly Removal and Installation” in Section 4A.
- Set each clamp for wiring securely.
- Install starting motor referring to “Starting Motor Dismounting and Remounting” in Section 6G.
- After connecting clutch cable, be sure to adjust its play properly.
  Refer to “Clutch Pedal Inspection” in Section 7C.
- Fill transaxle with oil as specified referring to “Manual Transaxle Oil Change” in this section.
- Connect battery and check function of engine, clutch and transaxle.

Transaxle Case Components

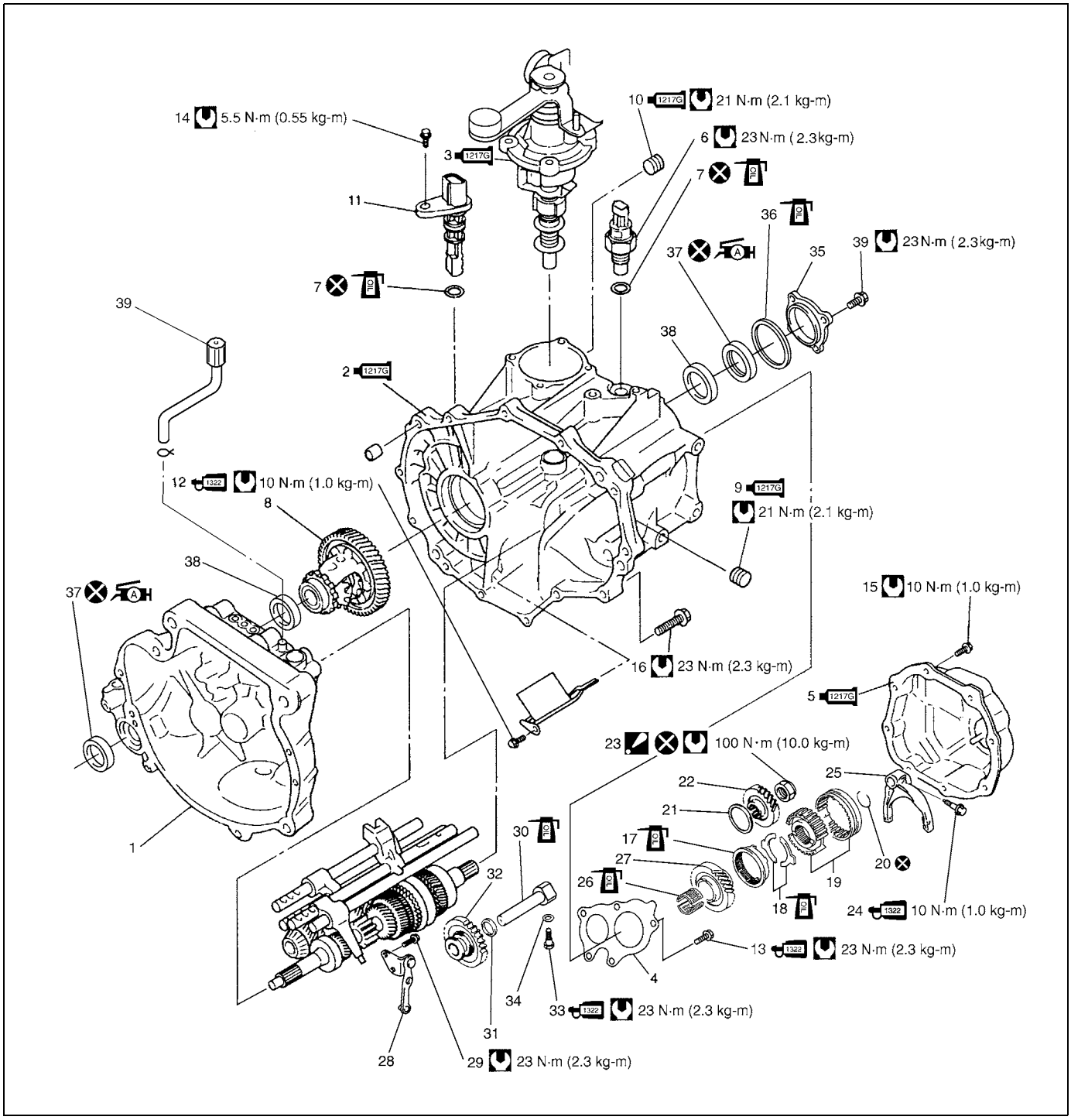

	1. Transaxle right case		22. Counter shaft 5th gear
1217G	2. Transaxle left case : Apply sealant 99000-31260 to mating surface of left case and right case.		23. Counter shaft nut
1217G	3. Gear shift and select shaft assembly	1322	24. Shift fork bolt : Apply thread lock 99000-32110 to all around thread part of bolt.
	4. Transaxle left case plate		25. 5th gear shift fork
1217G	5. Transaxle side cover : Apply sealant 99000-31260 to mating surface of side cover and left case.		26. Needle bearing (Separated steel cage type.)
	6. Back up lamp switch		27. Input shaft 5th gear
	7. O-ring		28. Reverse gear shift lever
	8. Differential assembly	1322	29. Reverse gear shift lever bolt : Apply thread lock 99000-32110 to all around thread part of bolt.
1217G	9. Oil level/filler plug : Apply sealant 99000-31260 to all around thread part of plug.		30. Reverse gear shaft
1217G	10. Oil drain plug : Apply sealant 99000-31260 to all around thread part of plug.		31. Washer
	11. VSS		32. Reverse idler gear
1322	12. Oil gutter bolt : Apply thread lock 99000-32110 to all around thread part of bolt.	1322	33. Reverse shaft bolt : Apply thread lock 99000-32110 to all around thread part of bolt.
1322	13. Left case plate bolts : Apply thread lock 99000-32110 to all around thread part of bolt.		34. Washer
	14. VSS bolt		35. Side bearing retainer
	15. Side cover bolts		36. O-ring
	16. Transaxle case bolts	A	37. Oil seal : Apply SUZUKI SUPER GREASE A 99000-25010 to Oil seal lip.
	17. 5th speed synchronizer ring		38. Outer race
	18. 5th speed synchronizer lever		39. Breather hose
	19. 5th speed sleeve & hub		Tightening torque
	20. Circlip		Do not reuse.
	21. Bearing set shim	GL	Apply transaxle oil.

Gear Shift and Select Shaft Assembly Components

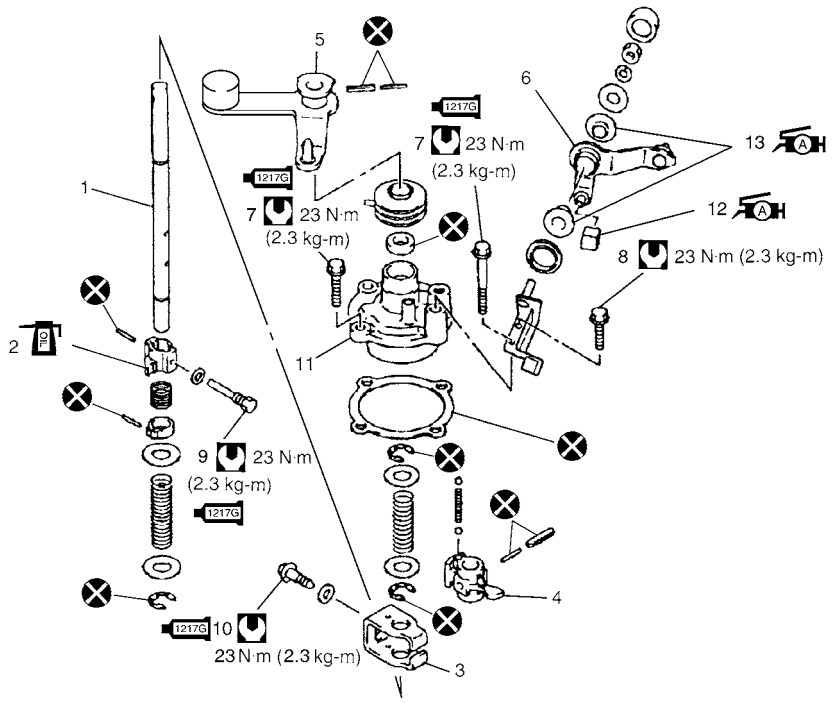

1.	Gear shift & select shaft	1217G	7. Gear shift guide case bolt	A H	13. Select lever boss :Apply grease 99000-25010 to internal and external diameter
2.	5th & reverse gear shift cam		8. Select lever bracket bolt		Tightening torque
3.	Gear shift interlock plate	1217G	9. 5th to reverse interlock guide bolt :Apply sealant 99000-31260 to bolt thread.		Do not reuse.
4.	Gear shift & select lever	1217G	10. Gear shift interlock bolt :Apply sealant 99000-31260 to bolt thread.	OIL	Apply transaxle oil.
5.	Shift cable lever		11. Guide case		
6.	Select cable lever	A H	12. Select lever shaft bush :Apply grease 99000-25010 to whole area of bush.		

Gear Shift and Select Shaft Assembly Removal and Installation

Removal

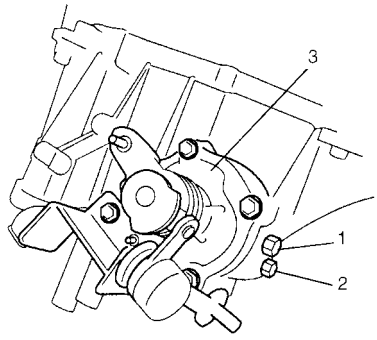

1) Remove gear shift interlock bolt (1) and 5th to reverse interlock guide bolt (2) from transaxle case.
2) Remove gear shift and select shaft assembly (3).

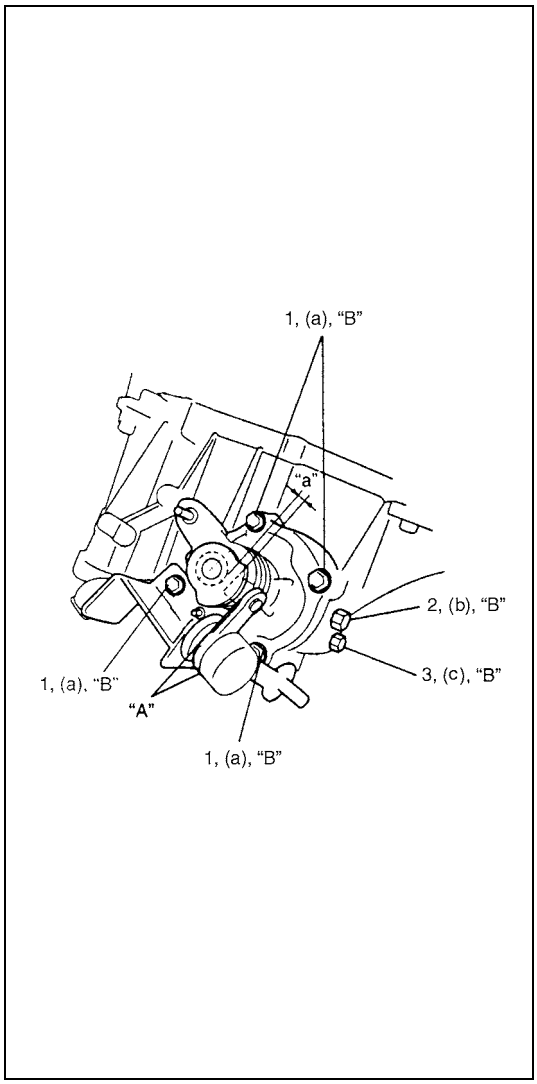

Installation

1) Apply grease to select lever shaft bush and select lever boss, and install gear shift and select shaft assembly with new gasket into transaxle.

"A" : Grease 99000-25010

2) Apply sealant to gear shift guide case bolts (1). Tighten gear shift guide case bolts (1) to specified torque at the position that clearance "a" is within 1 - 1.5 mm (0.04 - 0.06 in.).

"B" : Sealant 99000-31260

Tightening torque
Gear shift guide case bolt
(a) : 23 N·m (2.3 kg-m, 17.0 lb-ft)

3) Install washer and gear shift interlock bolt (2) to which sealant have been applied and them tighten it to specified torque.

"B" : Sealant 99000-31260

Tightening torque
Gear shift interlock bolt (b) : 50 N·m (5.0 kg-m, 37.5 lb-ft)

4) Install washer and 5th to reverse interlock guide bolt (3) to which sealant have been applied and then tighten it to specified torque.

"B" : Sealant 99000-31260

Tightening torque
5th to reverse interlock guide bolt
(c) : 23 N·m (2.3 kg-m, 17.0 lb-ft)

Gear Shift and Select Shaft Disassembly and Assembly

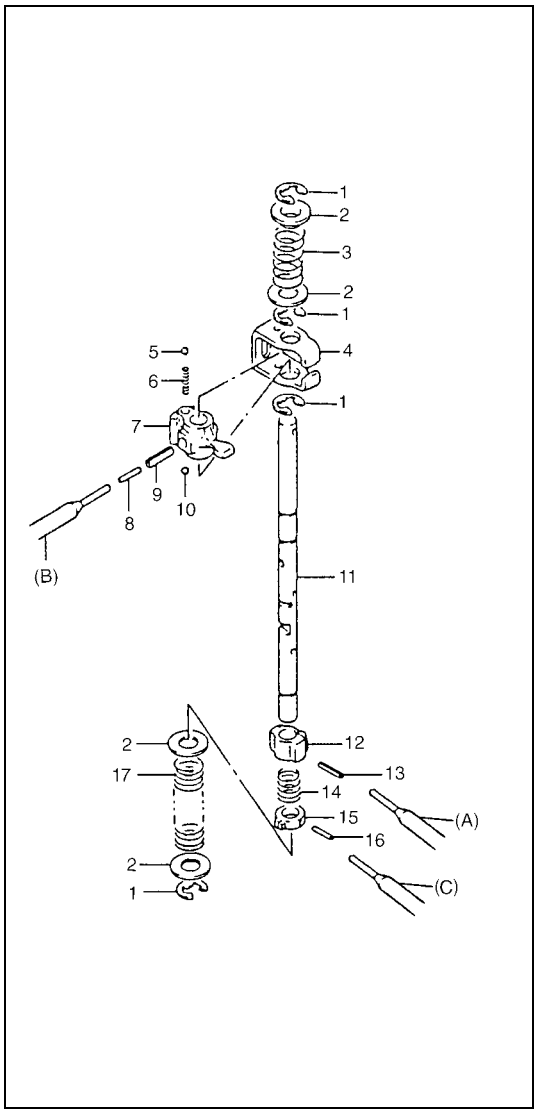

1) Push spring pins out using specified spring pin removers as shown bellow.

Special tool
(A) : 09922-85811 (4.5 mm)
(B) : 09925-78210 (6.0 mm)
(C) : 2.8 – 3.0 mm (0.11 – 0.12 in.) Commercially available spring pin remover

2) Inspect component parts for wear, distortion or damage. If any detect is found, replace detective part with new one.

NOTE:

- **When driving in spring pins, prevent shaft from being bent by supporting it with wood block.**
- **Assemble 5th & reverse gear shift cam with its pit and spring pin aligned.**
- **Make sure to select an appropriate spring by identifying the painted colors to keep gear shifting performance as designed.**
  - **– Low speed select spring - No paint**
  - **– Reverse select spring - Pink**

1. E-ring	10. Ball
2. Washer	11. Gear shift & select shaft
3. Reverse select spring	12. 5th & reverse gear shift cam
4. Gear shift interlock plate	13. Spring pin
5. Ball	14. Cam guide return spring
6. Gear shift interlock spring	15. 5th & reverse gear shift cam guide
7. Gear shift & select lever	16. Spring pin
8. Spring pin	17. Low speed select spring
9. Spring pin	

Fifth Gear Disassembly and Assembly

Disassembly

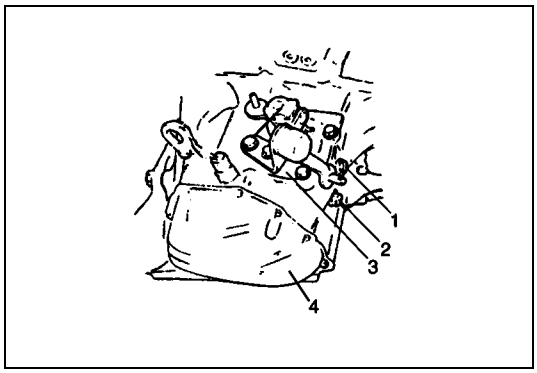

1) Remove gear shift interlock bolt (1) and 5th to reverse interlock guide bolt (2) from transaxle case.
2) Remove gear shift & select shaft assembly (3).
3) Remove 9 bolts and take off transaxle side cover (4).

CAUTION:
Care should be taken not to distort side cover when it is removed from left case.

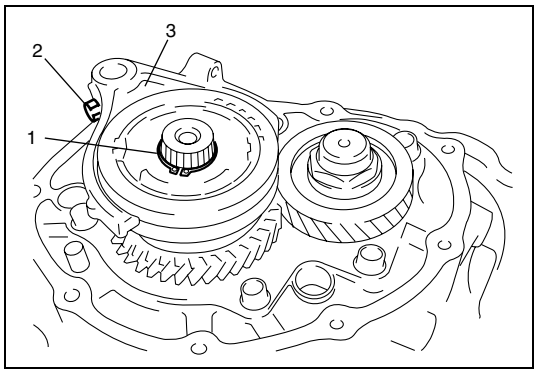

4) Using special tool, remove circlip (1).

Special tool
09900-06107

5) Remove 5th shift fork bolt (2).
6) Remove gear shift fork (3), sleeve & hub assembly, synchronizer levers, synchronizer ring and 5th gear all together. Use gear puller for removal if spline fitting of hub is tight.

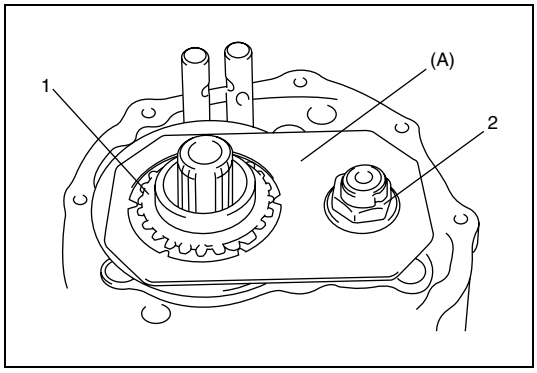

7) Unfasten caulking of counter shaft nut (2), install input shaft 5th gear (1) and special tool to stop rotation of shafts, and then remove counter shaft nut (2).

Special tool
(A) : 09927-76060

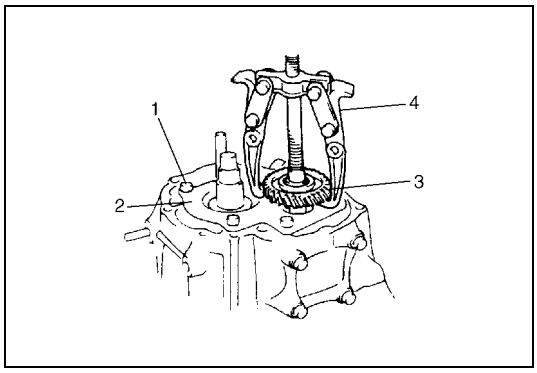

8) Remove input shaft 5th gear, needle bearing and then counter shaft 5th gear (3). Gear puller (4) would be necessary if spline fitting of counter shaft 5th gear is tight.
9) Remove bolts (1), and take off left case plate (2) and bearing set shim.

10) Remove bearing set shim.

Assembly

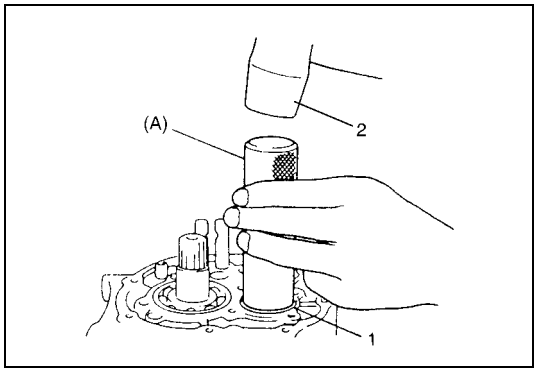

1) Install counter shaft left bearing outer race (1) to bearing cone, and tap cup using special tool and plastic hammer (2).

Special tool
(A) : 09913-70123

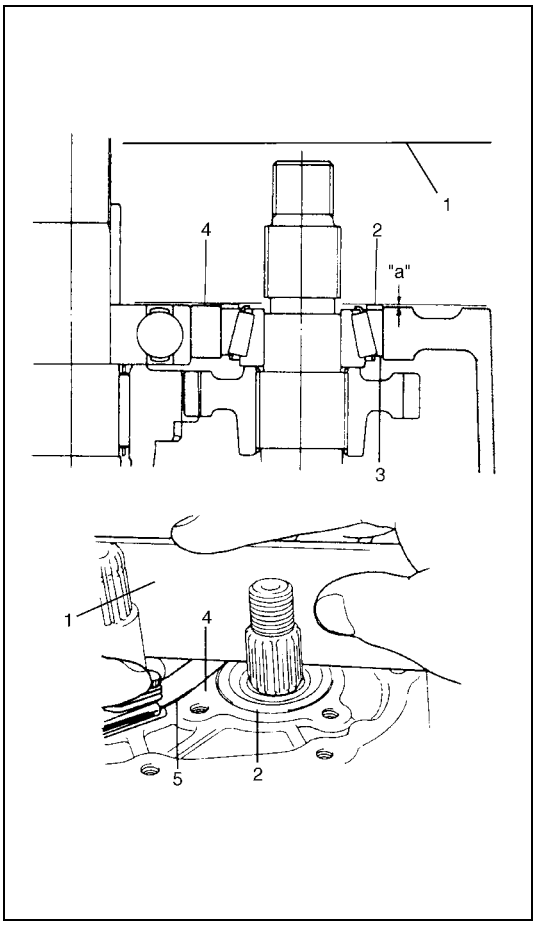

2) With putting a shim (2) on bearing outer race (3), place straight edge (1) over it and compress it by hand through straight edge, and then measure clearance “a” between case surface (4) and straight edge using feeler gauge (5).

Clearance between case surface and straight edge
“a” : 0.13 – 0.17 mm (0.0051 – 0.0067 in.)
(Shim protrusion)

3) By repeating above step, select a suitable shim which adjusts clearance “a” to specification and put it on bearing outer race.

NOTE:

Insert 0.15 mm (0.0059 in.) feeler to know whether or not a shim fulfills specification quickly.

Available shim thickness
0.55, 0.6, 0.65,0.7, 0.75, 0.8, 0.85, 0.9, 0.95, 1.0, 1.05 and 1.10 mm (0.021, 0.023, 0.025, 0.027, 0.029, 0.031, 0.033, 0.035, 0.037, 0.039, 0.041 and 0.043 in.)

CAUTION:

Do not reuse left case plate bolts (1). Be sure to use new adhesive pre-coated bolts. Otherwise, bolts may loosen.

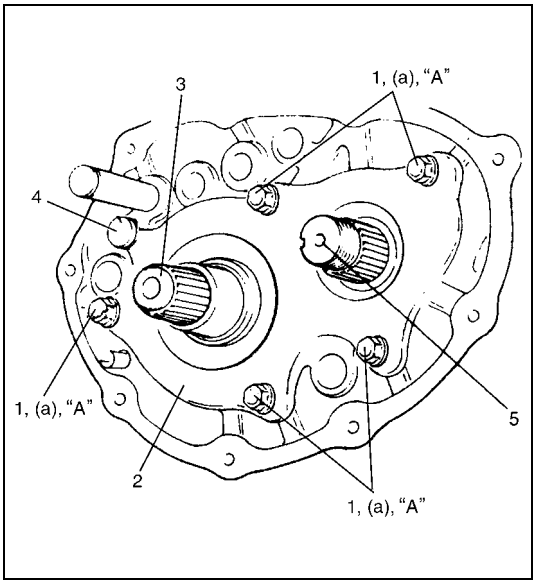

4) Place left case plate (2) inserting its end in groove of shift guide shaft (4) and then tighten bolts (1) to which thread lock cement has been applied.

NOTE:

After tightening bolts, make sure that counter shaft can be rotated by hand feeling certain load.

“A” : Cement 99000-32110

Tightening torque
Left case plate bolt
(a) : 23 N·m (2.3 kg-m, 17.0 lb-ft)

3. Input shaft
5. Counter shaft

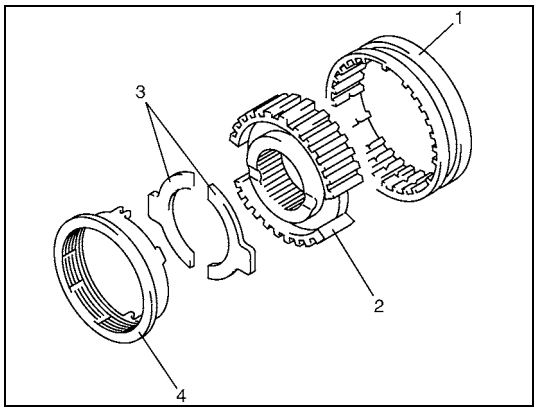

5) Assemble 5th speed synchronizer sleeve (1), hub (2), 5th speed synchronizer levers (3) and synchronizer ring (4) as follows.

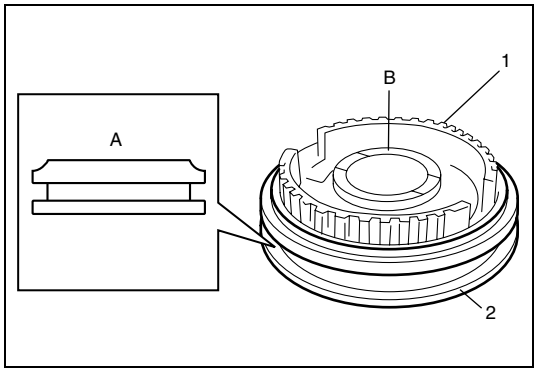

a) Install hub (1) to 5th speed synchronizer sleeves (2) in specified direction as shown in figure.

A : Chamfered side
B : Long boss

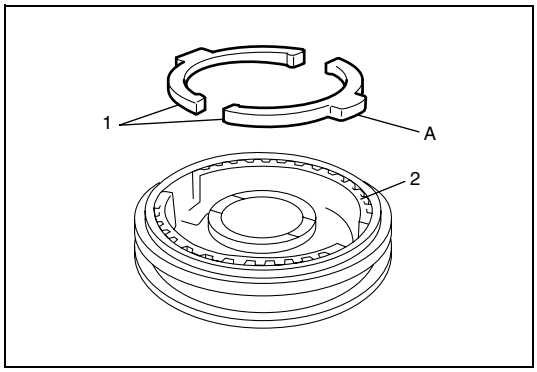

b) Fit 5th speed synchronizer levers (1) to hub (2) as shown in figure.

NOTE:

- **Aligne protrusion "A" of 5th speed synchronizer levers (1) with groove of hub (2).**

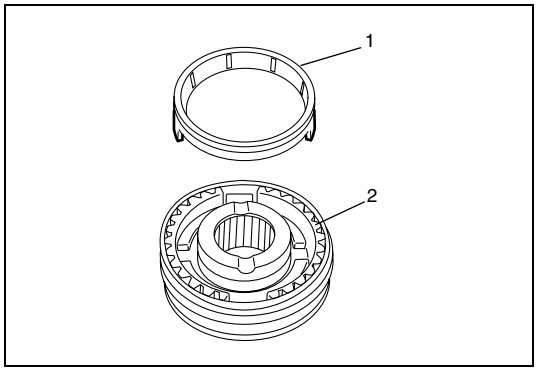

c) Install synchronizer ring (1) to hub (2) as shown in figure.

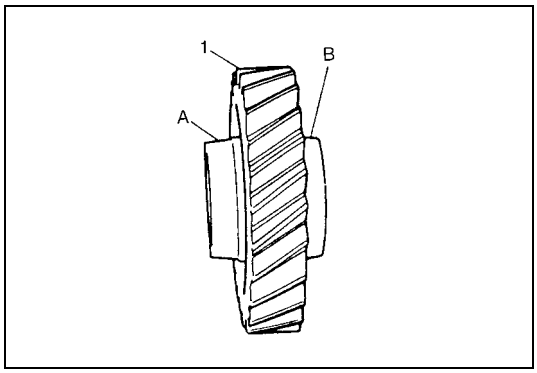

6) Install 5th gear (1) to counter shaft facing machined boss A inward.

A :	Machined boss (Inside)
B :	No machining (Outside)

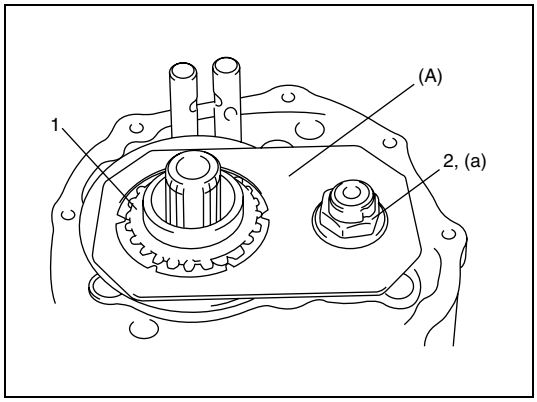

7) Install needle bearing of separated steel cage type to input shaft, apply oil then install 5th gear (1) and special tool to stop shaft rotation.

Special tool
(B) : 09927-76060

8) Tighten new counter shaft nut (2) to specified torque, and caulk counter shaft nut (2) securely.

Tightening torque
counter shaft nut (a) : 100 N·m (10.0 kg-m, 75.0 lb-ft)

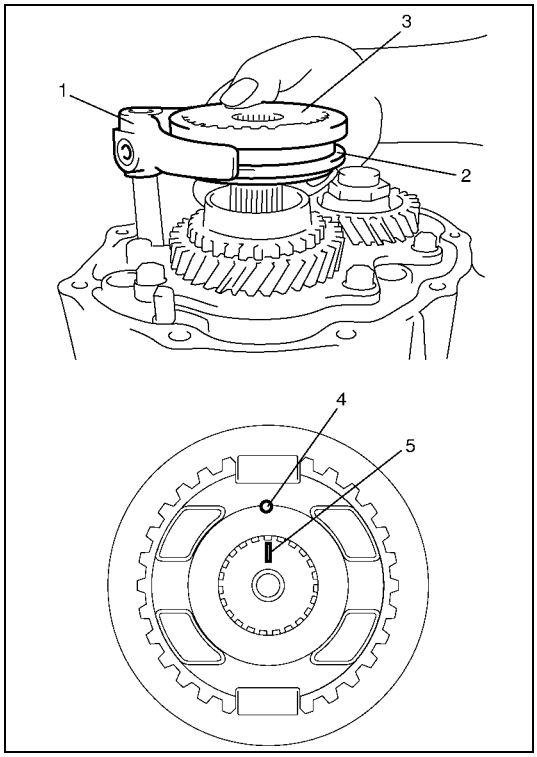

9) Fit 5th gear shift fork (1) to sleeve (3) and hub (2) assembly, and install them to input shaft and gear shift shaft aligning punch mark (4) with matching mark (5) on input shaft.

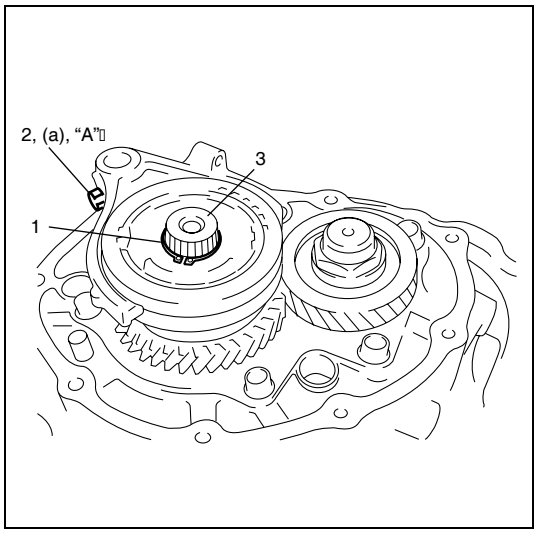

10) Tighten shift fork shaft bolt (2) to which thread lock cement has been applied.

"A" : Cement 99000-32110

Tightening torque
Shift fork bolt
(a) : 10 N·m (1.0 kg-m, 7.5 lb-ft)

11) Using special tool, install new circlip (1) to input shaft (3) in specified direction as shown in the figure.

Special tool
09900-06107

4. Polished surface

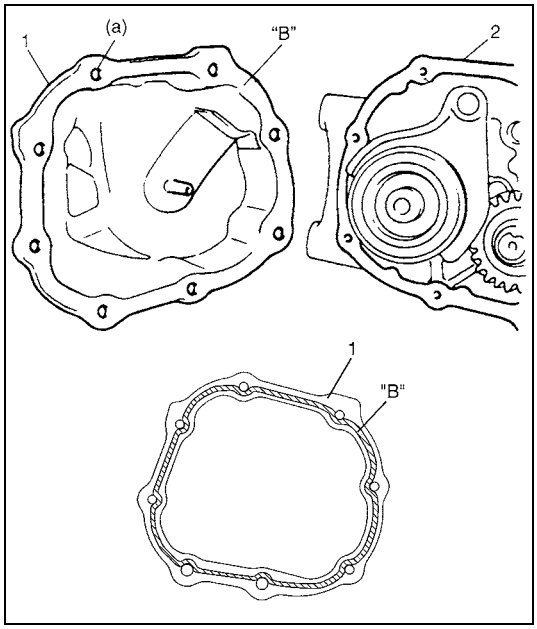

12) Clean mating surface of both left case (2) and side cover (1), apply sealant to side cover (1) as shown in figure by such amount that its section is 1.5mm (0.059 in.) in diameter, mate it with left case and then tighten bolts.

"B" : Sealant 99000-31260

Tightening torque
Side cover bolt (a) : 10 N·m (1.0 kg-m, 7.5 lb-ft)

Gear Shift Shaft, Input Shaft and Counter Shaft Removal and Installation

Removal

1) Remove gear shift and select shaft assembly referring to "Gear Shift and Select Shaft Assembly Removal and Installation" in this section.
2) Remove fifth gear referring to "Fifth Gear Disassembly and Assembly" in this section.

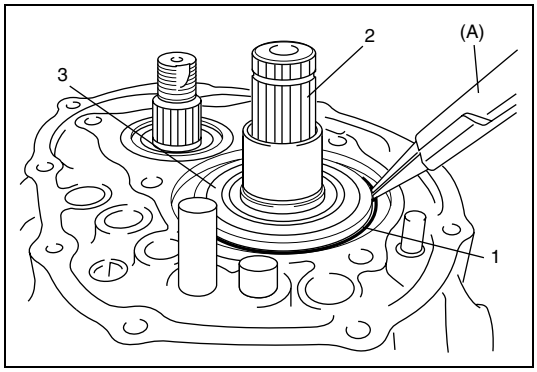

3) Remove snap ring (1) using special tool.

Special tool
(A) : 09900-06107

2. Input shaft
3. Input shaft left bearing

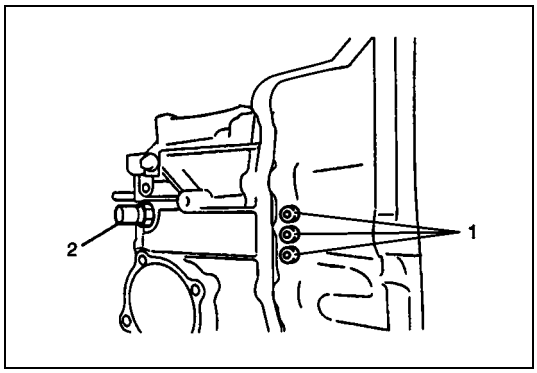

4) Remove gear shift locating bolts (1) with washers, then take out locating springs and steel balls.
5) Remove back up lamp switch (2).

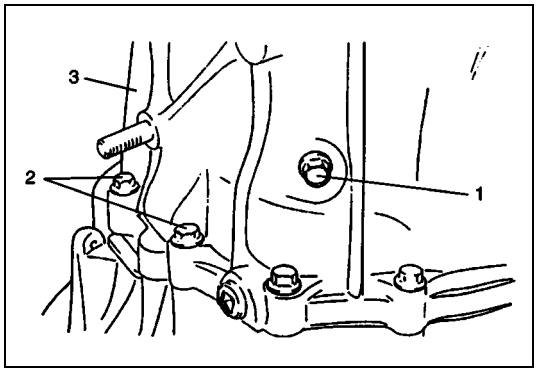

6) Remove reverse shaft bolt (1) with washer.
7) Remove case bolts (2) from outside and another bolts from clutch housing side.
8) Tapping left case (3) flanges with plastic hammer, remove left case.

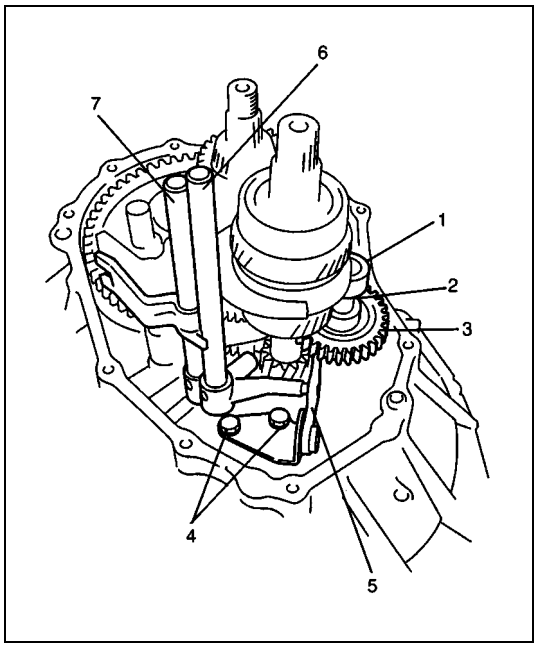

9) Pull out reverse gear shaft (1) with washer (2), then take off reverse idler gear (3).
10) Remove reverse gear shift lever bolts (4) and reverse gear shift lever (5).
11) Pull out 5th & reverse gear shift guide shaft (6) together with 5th & reverse gear shift shaft (7).

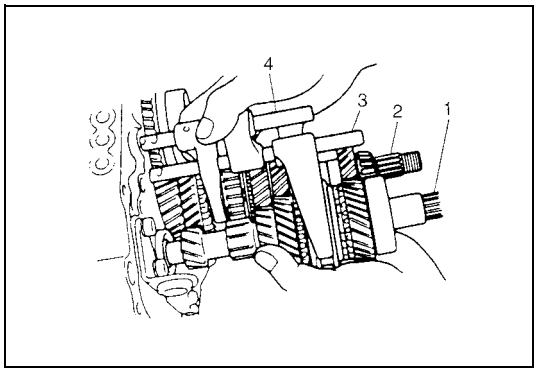

12) Tapping input shaft end with plastic hammer, push it out as assembly from case a little, then take out input shaft assembly (1), counter shaft assembly (2), high speed gear shift shaft (3) and low speed gear shift shaft (4) all at once.

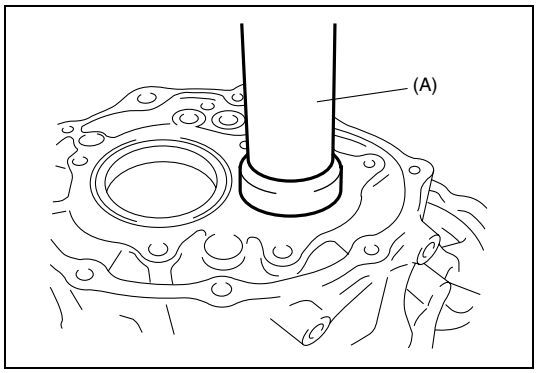

13) Remove counter shaft left bearing outer race from left case using special tool.

Special tool
(A) : 09913-70123

14) Remove side bearing retainer bolts.

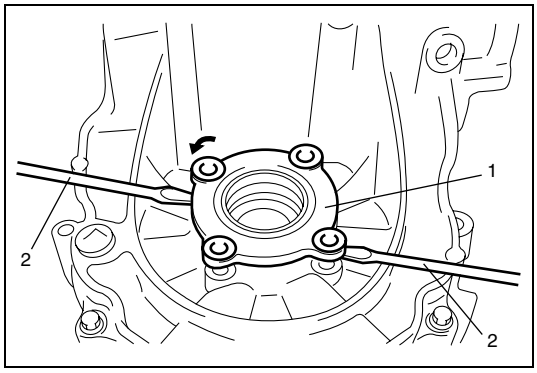

15) Turn side bearing retainer (1) counterclockwise until it stops, and remove side bearing retainer using 2 flat end rods (2) or the like.
16) Remove O-ring from side bearing retainer (1).
17) Remove differential bearing shim.

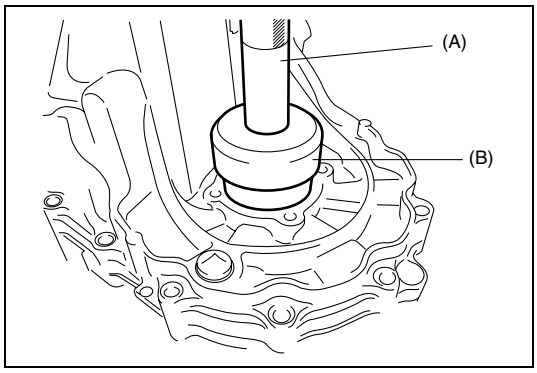

18) Remove differential side bearing outer race from left case using special tools.

Special tool
(A) : 09924-74510
(B) : 09926-27610

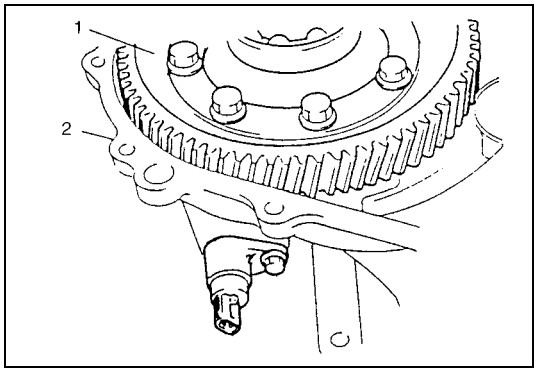

19) Remove differential gear assembly (1) from right case (2).

Installation

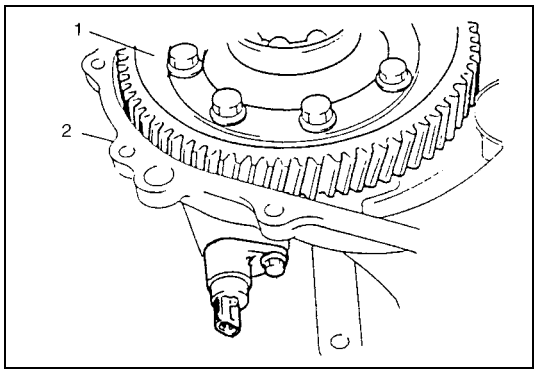

1) Install differential assembly (1) into right case (2).

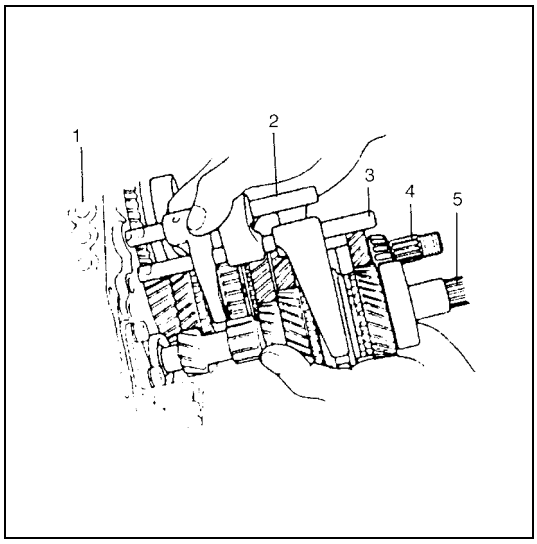

2) Join input shaft (5), counter shaft (4), low speed gear shift shaft (2) and high speed gear shift shaft (3) assemblies all together, then install them into right case (1).

CAUTION:
Take care not to damage oil seal lip by input shaft, or oil leakage may take place.

NOTE:

- **Input shaft right bearing on shaft can be installed into right case tapping shaft with plastic hammer.**
- **Check to make sure that counter shaft is engaged with final gear while installing.**

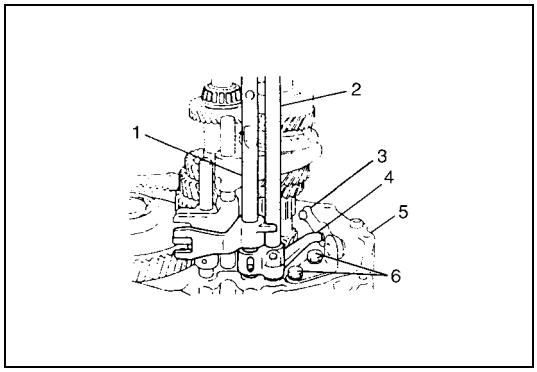

3) Install 5th & reverse gear shift shaft (1) with 5th & reverse gear shift guide shaft (2) into right case (5). Reverse gear shift arm (4) has to be joined with reverse gear shift lever (3) at the same time.

6. Reverse gear shift lever bolts

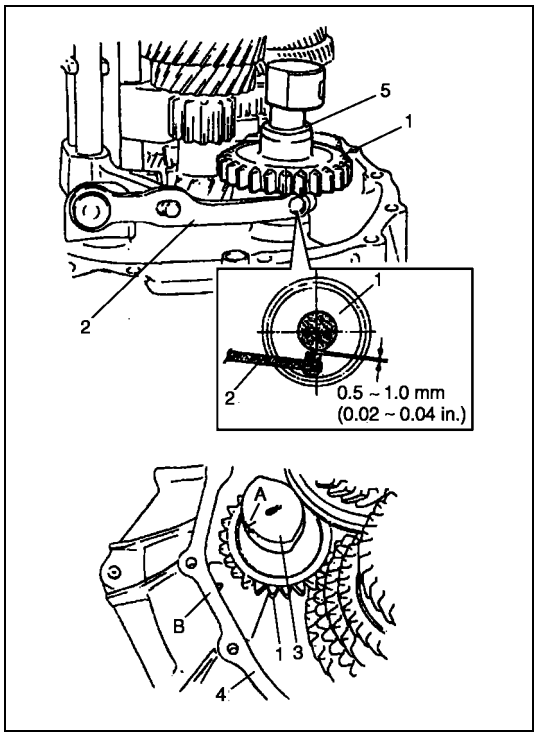

4) Make reverse idler gear (1) with reverse gear shift lever (2), insert reverse gear shaft (3) into case (4) through idler gear and then align “A” in shaft with “B” in case.
5) Fasten reverse gear shift lever bolts after applying thread lock cement.

Thread lock cement : 99000-32110

Tightening torque
Reverse gear shift lever bolt : 23 N·m (2.3 kg-m, 17.0 lb-ft)

NOTE:

- **Make sure that washer (5) has been installed in shaft at above the gear.**
- **Check to confirm that reverse gear shift lever end has clearance 0.5 – 1.0 mm (0.02 – 0.04 in.) to idler gear groove.**

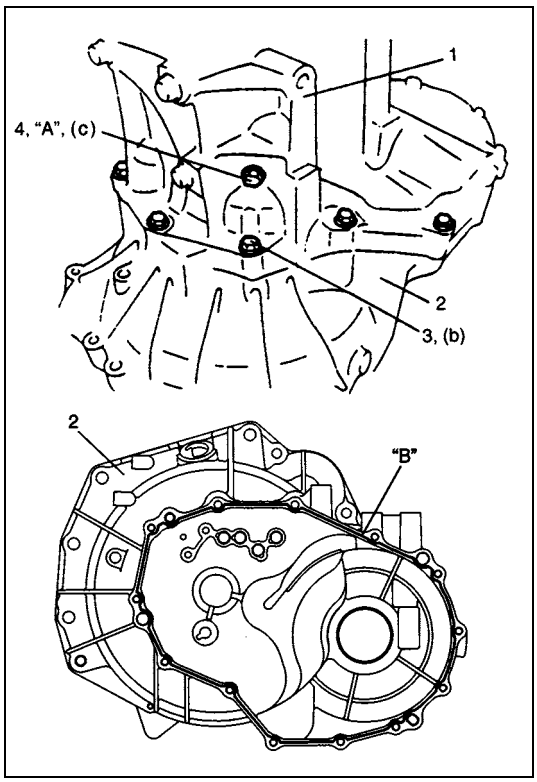

6) Clean mating surfaces of both right and left cases, apply sealant to right case (2) as shown in figure by such amount that its section is 1.5mm (0.059 in.) in diameter then mate it with left case (1).

“B” : Sealant 99000-31260

7) Tighten case bolts (3) from left outside to specified torque.

Tightening torque
Transaxle case bolt (b) : 23 N·m (2.3 kg-m, 17.0 lb-ft)

8) Install reverse shaft bolt (4), to which thread lock cement has been applied, with aluminum washer and tighten it.

“A” : Thread lock cement 99000-32110

Tightening torque
Reverse shaft bolt (c) : 23 N·m (2.3 kg-m, 17.0 lb-ft)

9) Install another case bolts from clutch housing side and tighten them to specification.

Tightening torque
Transaxle case bolt : 23 N·m (2.3 kg-m, 17.0 lb-ft)

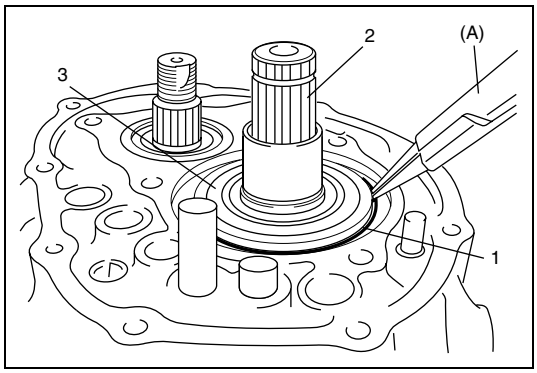

10) Install new snap ring (1) using special tool.

Special tool
(A) : 09900-06107

2.	Input shaft
3.	Input shaft left bearing

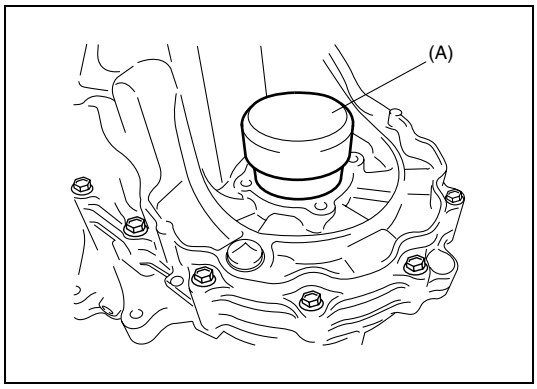

11) Install differential side bearing outer race to left case and then tap and accustom outer race by using special tool and plastic hammer.

CAUTION:
Do not drive in a race with hammer.
Driving it way cause to damage bearing.

Special tool
(A) : 09926-27610

12) Select proper size shim according to "Differential Adjustment" in this section.
13) Apply oil to new O-ring of side bearing retainer, and install it with new O-ring to left case.

Grease : 99000-25010

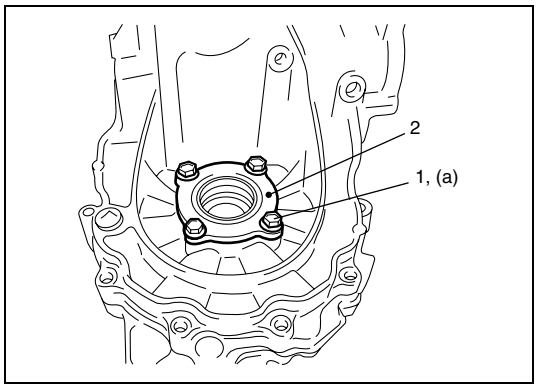

14) Tighten side bearing retainer bolts (1) to specified torque.

NOTE:

- **Install side bearing retainer with its punch mark (2) facing upward.**

Tightening torque
Side bearing retainer bolt (a) : 23 N·m (2.3 kg-m, 17.0 lb-ft)

15) Install counter shaft left bearing outer race referring to "Fifth Gear Disassembly and Assembly" in this section.

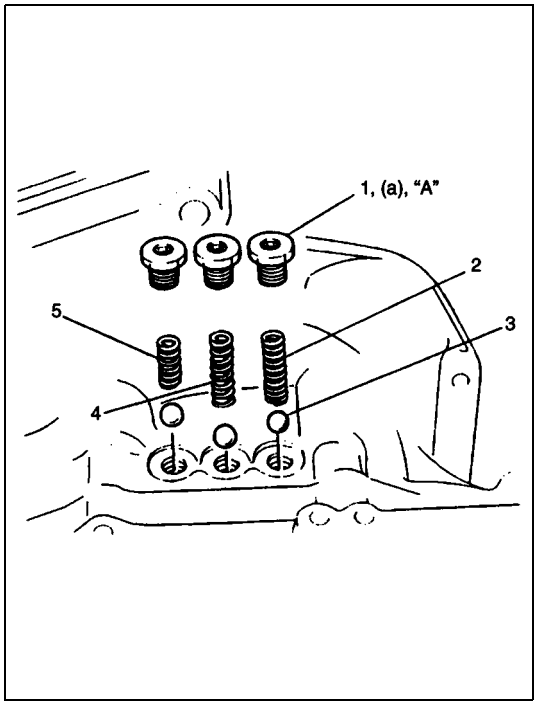

16) Check locating spring for deterioration and replace with new one as necessary.

Locating spring free length	Standard	Service limit
Low speed (2)	53.1 mm (2.091 in.)	50.5 mm (1.988 in.)
High speed (4)	45.9 mm (1.807 in.)	44.0 mm (1.732 in.)
5th & reverse (5)	29.9 mm (1.777 in.)	28.5 mm (1.122 in.)

17) Install steel balls (3) and locating springs (2, 4 and 5) for respective gear shift shaft and tighten bolts (1) to which sealant has been applied.

Sealant "A" : 99000-31260

Tightening torque
Gear shift locating bolt (a) : 13 N·m (1.3 kg-m, 9.5 lb-ft)

18) Clean mating surface of guide case.
19) Install fifth gear referring to "Fifth Gear Disassembly and Assembly.

20) Install gear shift and select shaft assembly referring to “Gear Shift Shaft, Input Shaft and Counter Shaft Removal and Installation” in this section.

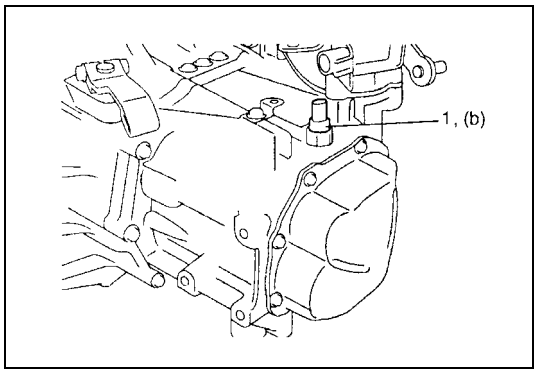

21) Tighten back up lamp switch (1) to specified torque.

Tightening torque
Back up lamp switch (b) : 23 N·m (2.3 kg-m, 17.0 lb-ft)

22) Check input shaft for rotation in each gear position.
23) Also confirm continuity of back up lamp switch in reverse position using ohmmeter.

Transaxle Right Case Disassembly and Assembly

Disassembly

1) Remove gear shift shaft, input shaft and counter shaft referring to “Gear Shift Shaft, Input Shaft and Counter Shaft Removal and Installation” in this section.

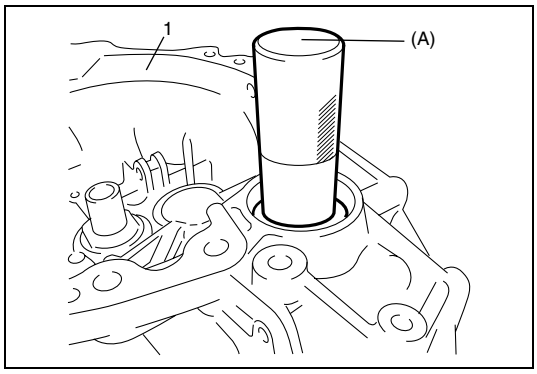

2) Remove differential side bearing outer race using special tool.

Special tool
(A) : 09925-15410

1. Transaxle right case

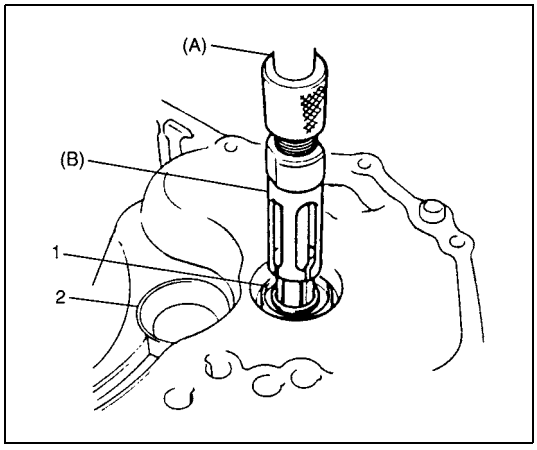

3) Remove input shaft oil seal (1) using special tools, if necessary.

Special tool
(A) : 09930-30104
(B) : 09923-74510

4) Pull out counter shaft right bearing outer race (2) using special tools, if necessary.

Special tool
09930-30104
09941-64511

5) Replace differential side oil seal from right case referring to “Differential Side Oil Seal Replacement” in this section, if necessary.

Assembly

NOTE:

Before installation, wash each part and apply specified transaxle oil to sliding faces of bearing and gear.

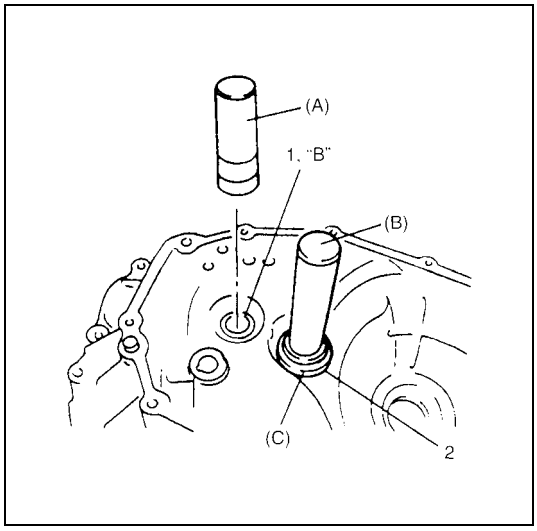

1) If input shaft oil seal (1) has been removed, install it with its spring side facing upward.
   Use special tool and hammer for installation and apply grease to oil seal lip.

"B" : Grease 99000-25010

Special tool
(A) : 09913-84510

2) If counter shaft right bearing cup (2) has been removed, install it using special tools and hammer.

Special tool
(B) : 09925-98210
(C) : 09924-84510

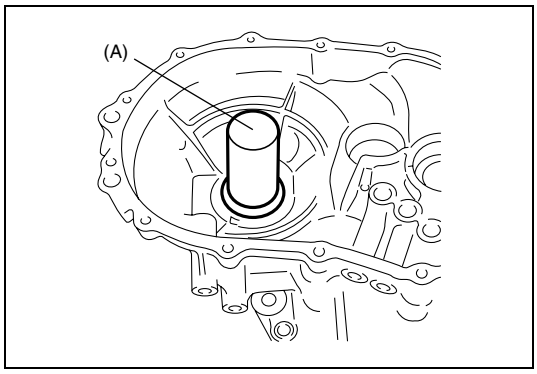

3) Install differential side bearing outer race to right case using special tool and hammer.

Special tool
(A) : 09913-85210

4) Install gear shift shaft, input shaft and counter shaft referring to "Gear Shift Shaft, Input Shaft and Counter Shaft Removal and Installation" in this section.

Transaxle Left Case Disassembly and Assembly

Disassembly

1) Replace differential side oil seal from left case referring to "Differential Side Oil Seal Replacement" in this section, if necessary.

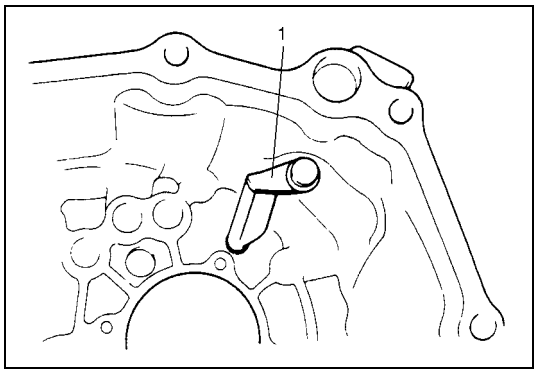

2) Remove input oil gutter (1) from left case, if necessary.

Assembly

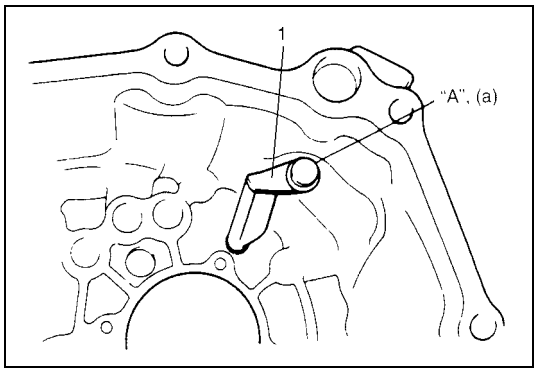

1) If input oil gutter (1) has been removed, install it with bolt to which thread lock cement have been applied.

"A" : Thread lock cement 99000-32110

Tightening torque
Oil gutter bolt (a) : 10 N·m (1.0 kg-m, 7.5 lb-ft)

2) If differential side oil seal is removed, install it to left case referring to "Differential Side Oil Seal Replacement" in this section.

Input & Counter Shaft Components

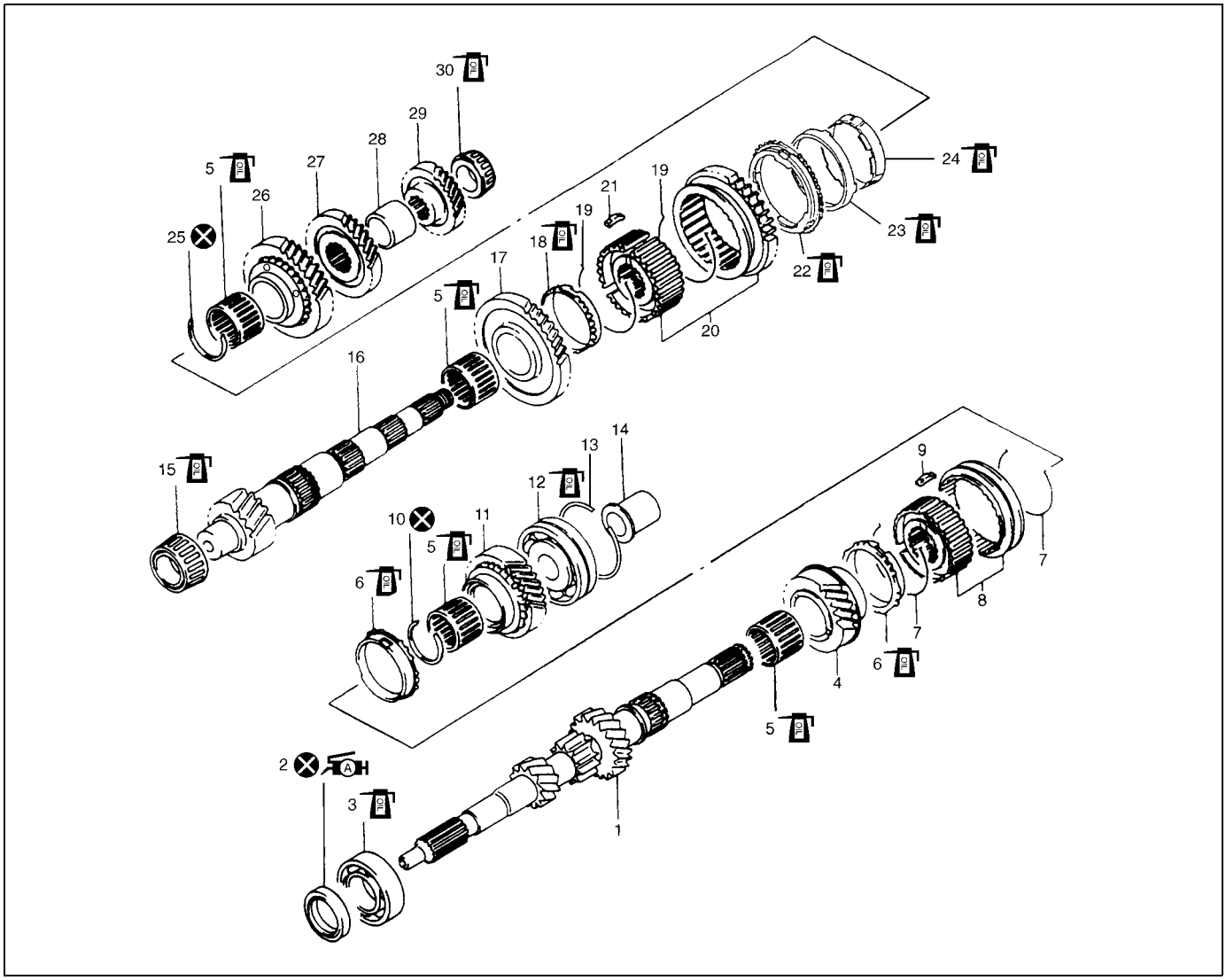

	1. Input shaft	12. Input shaft left bearing	23. Center cone
A H	2. Oil seal : Apply grease 99000-25010 to oil seal lip.	13. Circlip	24. 2nd gear synchronizer inner ring
	3. Input shaft right bearing	14. 5th gear spacer	25. Circlip
	4. Input shaft 3rd gear	15. counter shaft right bearing	26. counter shaft 2nd gear
	5. Needle bearing (resin cage type)	16. counter shaft	27. counter shaft 3rd gear
	6. High speed synchronizer ring	17. counter shaft 1st gear	28. 3rd & 4th gear spacer
	7. High speed synchronizer spring	18. 1st gear synchronizer ring	29. counter shaft 4th gear
	8. High speed sleeve & hub	19. Low speed synchronizer spring	30. counter shaft left bearing
	9. High speed synchronizer key	20. Low speed sleeve & hub	Do not reuse.
	10. Circlip	21. Low speed synchronizer key	Apply transaxle oil.
	11. Input shaft 4th gear	22. 2nd gear synchronizer outer ring	

Input Shaft Disassembly and Assembly

Disassembly

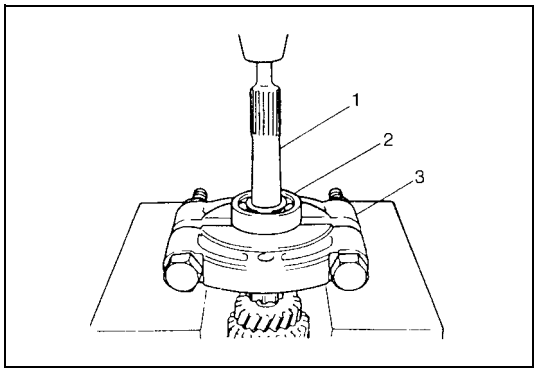

1) Remove input shaft right bearing (2) from input shaft (1) using bearing puller (3) and press.

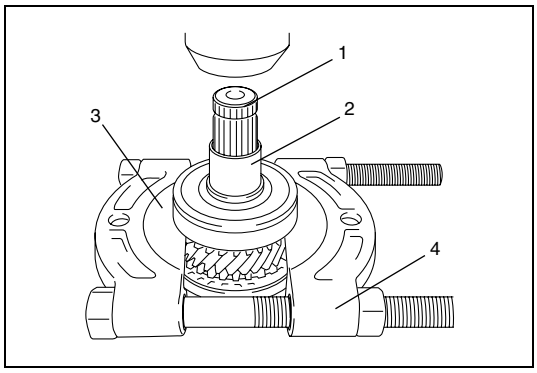

2) Drive out 5th gear spacer (2) and left bearing (3) from input shaft (1) using puller (4) and press.

CAUTION:
To avoid gear tooth from being damaged, support it at flat side of bearing puller.

3) Take out 4th gear, 4th gear needle bearing of resin cage type and high speed synchronizer ring.

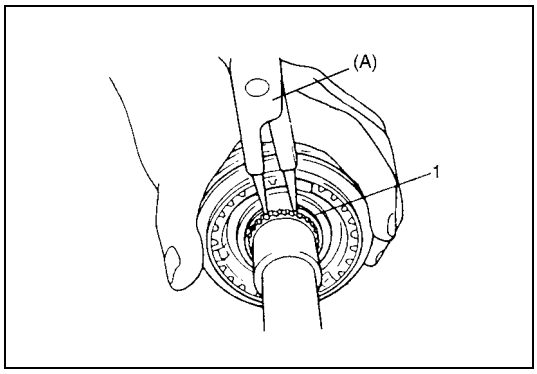

4) Using special tool, remove circlip (1).

Special tool
(A) : 09900-06107

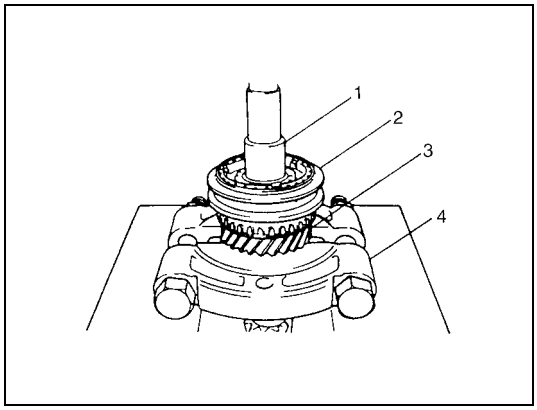

5) Drive out high speed synchronizer sleeve & hub assembly (2) together with 3rd gear (3) from input shaft (1) using puller (4) and press.

CAUTION:
Make sure to use flat side of puller to avoid causing damage to 3rd gear tooth.

6) Take out 3rd gear needle bearing of resin cage type from shaft.
7) Disassemble synchronizer sleeve & hub assembly.

Assembly

1) Clean all components thoroughly, inspect them for any abnormality and replace with new ones as necessary.

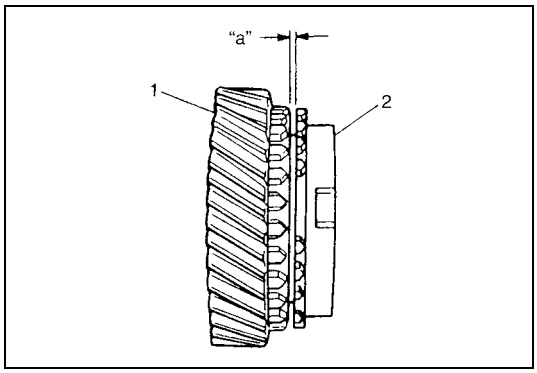

2) If synchronizer parts need to be repaired, check clearance "a" between ring (2) and gear (1), each chamfered tooth of gear, ring and sleeve, then determine parts replacement.

Clearance between synchronizer ring and gear
Standard "a" : 1.0 – 1.4 mm (0.039 – 0.055 in.)
Service limit "a" : 0.5 mm (0.019 in.)

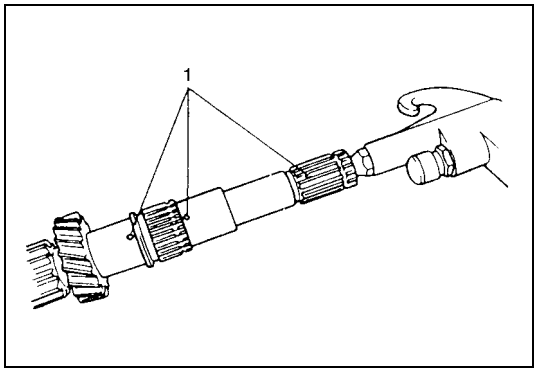

3) To ensure lubrication, air blow oil holes (1) and make sure that they are free from any obstruction.

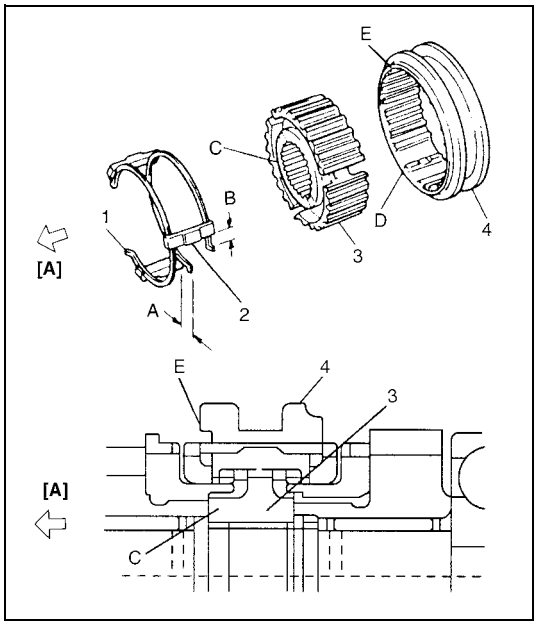

4) Fit high speed synchronizer sleeve (4) to hub (3), insert 3 keys (2) in it and then set springs (1) as shown in figure.

NOTE:

- **No specific direction is assigned to each key but it is assigned as sleeve & hub assembly.**
- **Size of high speed synchronizer sleeve, hub, keys and springs is between those of low speed and 5th speed ones.**

Synchronizer key installation position
: A = B

[A] : 3rd gear side
C : Long flange
D : Key way
E : Projecting end

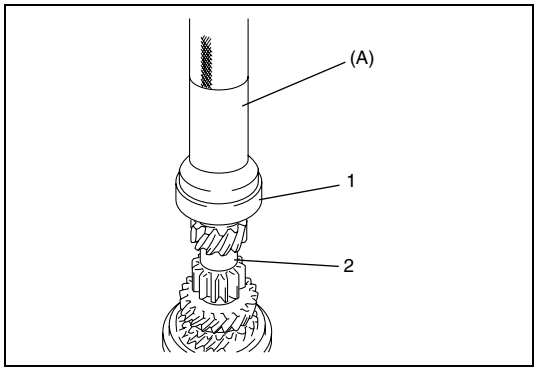

5) Drive in right bearing (1) to input shaft (2) using special tool and hammer.

Special tool
(A) : 09951-16080

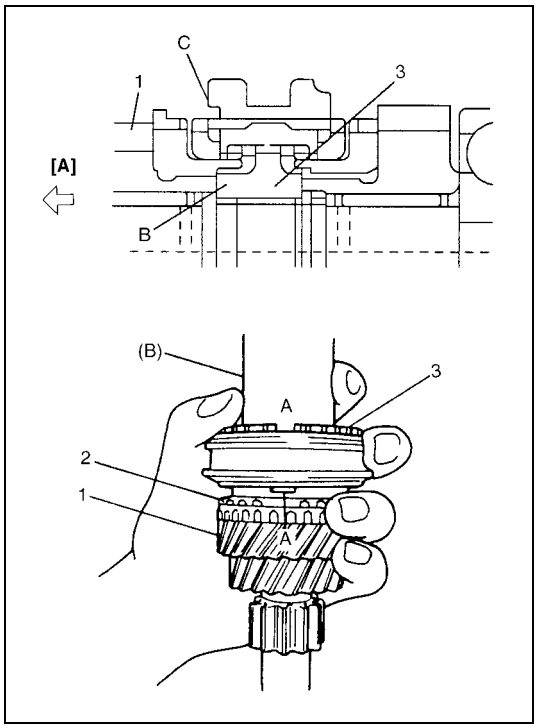

6) Install 3rd gear needle bearing of resin cage type, apply oil to it, then install 3rd gear (1) and synchronizer ring (2).
7) Drive in high speed sleeve & hub assembly (3) using special tool and hammer, facing long flange side of hub to 3rd gear.

NOTE:

- **While press-fitting sleeve & hub, make sure that synchronizer ring key slots are aligned with keys in sleeve & hub assembly.**
- **Check free rotation of 3rd gear after press-fitting sleeve & hub assembly.**
- **Synchronizer rings for 3rd and 4th are identical.**

Special tool
(B) : 09913-84510

[A] :	3rd gear side
A :	Key way
B :	Long flange
C :	Projecting end

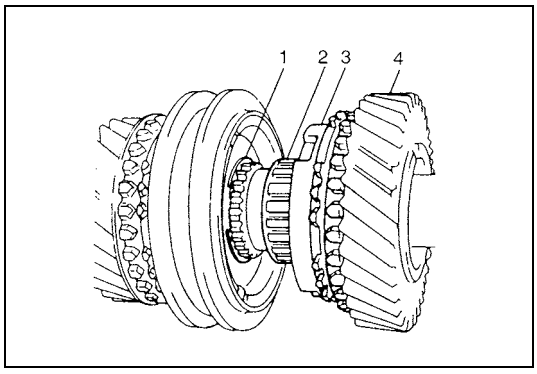

8) Install circlip (1) and confirm that circlip is installed in groove securely.
Install needle bearing (2) of resin cage type, apply oil to bearing and then install synchronizer ring (3) and 4th gear (4).

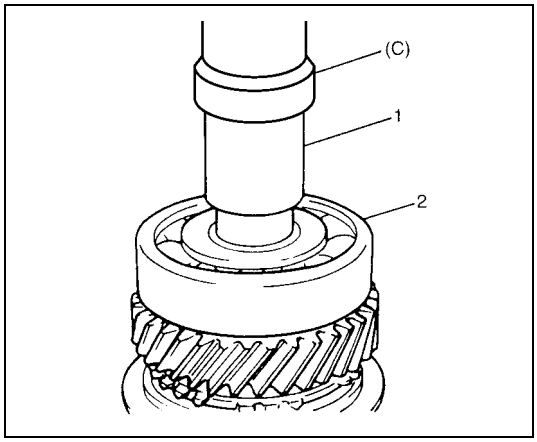

9) Press-fit left bearing (2) using special tool and hammer.

Special tool
(C) : 09913-70123

10) Using the same special tool at step 9), drive in 5th gear spacer (1).

CAUTION:
To prevent 5th gear spacer from being distorted because of excessive compression, do not press-fit it with left bearing at once.

Counter Shaft Disassembly and Assembly

Disassembly

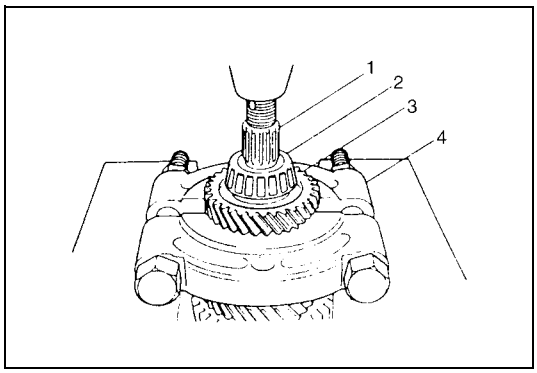

1) Drive out left bearing cone (2) with 4th gear (3) from counter shaft (1) using puller (4) and press.

CAUTION:
- **Use puller and press that will bear at least 5 ton (11,000 lb) safely.**
- **To avoid tooth damage, support 4th gear at flat side of puller.**

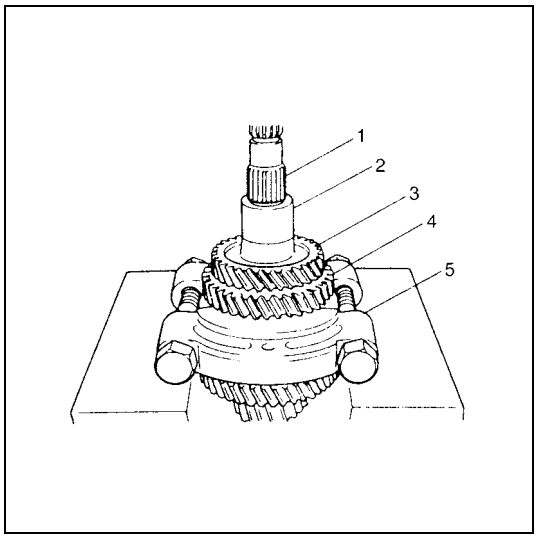

2) Apply puller (5) to 2nd gear (4) and drive out 3rd & 4th gear spacer (2) and 3rd gear (3) together with 2nd gear (4) from counter shaft (1) using press. Take out needle bearing of resin cage type from counter shaft.

CAUTION:
- **If compression exceeds 5 ton (11,000 lb), release compression once, reset puller support and then continue press work again.**
- **To avoid gear tooth from being damaged, support it at flat side of bearing puller.**

3) Take out 2nd synchronizer outer ring, center cone and inner ring.

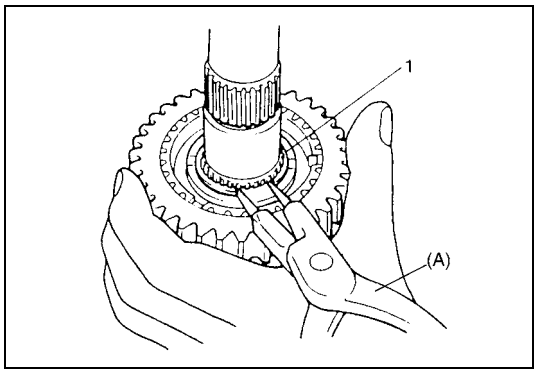

4) Using special tool, remove circlip (1).

Special tool
(A) : 09900-06107

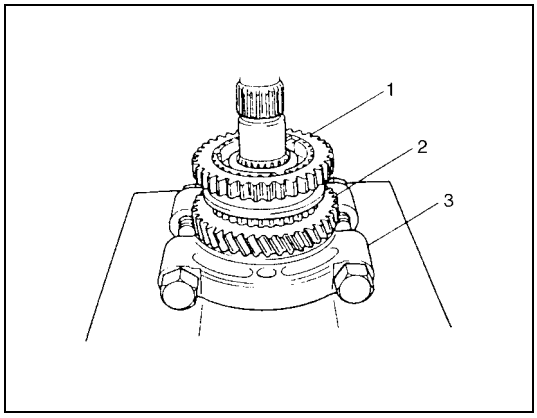

5) Apply puller (3) to 1st gear (2) and drive out low speed synchronizer sleeve & hub assembly (1) with 1st gear (1) using press.

CAUTION:
To avoid gear tooth from being damaged, support it at flat side of bearing puller.

6) Disassemble synchronizer sleeve & hub assembly.
7) Take out 1st gear needle bearing of resin cage type from shaft.

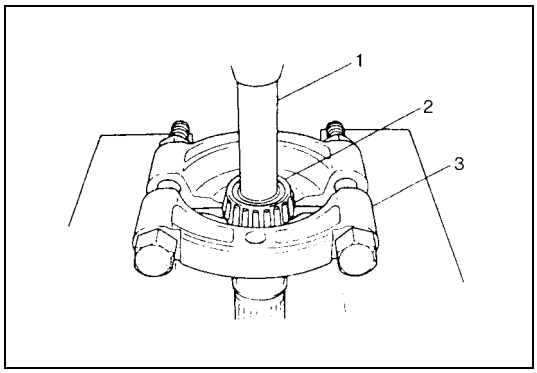

8) Remove right bearing cone (2) using puller (3), metal stick (1) and press.

Assembly

1) Clean all components thoroughly, inspect them for any abnormality and replace with new ones as necessary.

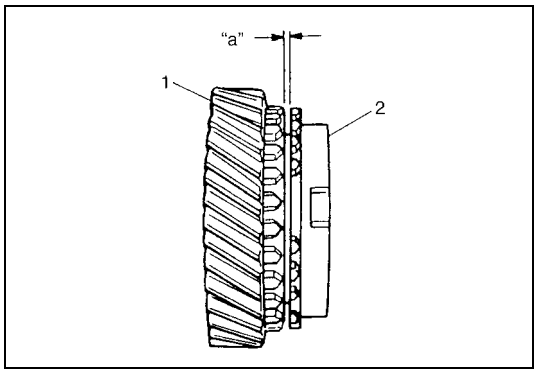

2) If synchronizer parts need to be repaired, check clearance "a" between ring (2) and gear (1), each chamfered tooth of gear, ring and sleeve, then determine parts replacement.

Clearance between synchronizer ring and gear
Standard "a" : 1.0 – 1.4 mm (0.039 – 0.055 in.)
Service limit "a" : 0.5 mm (0.019 in.)

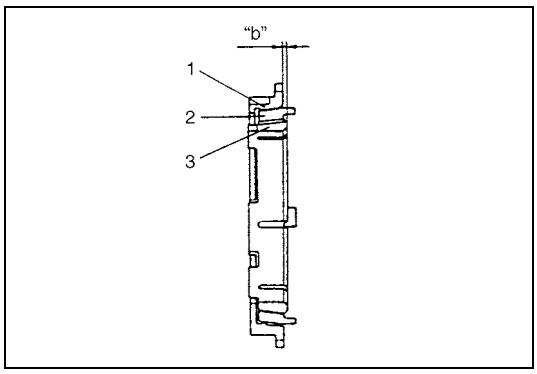

3) Put the synchronizer outer ring (1), inner ring (3) and the cone (2) together and then measure the step difference between the outer ring and the inner ring. And also check each chamfered tooth of gear and synchronizer ring and replace with new one, if necessary. Also, check gear tooth.

Difference between synchronizer outer ring and inner ring
Standard "b" : 1.0 – 1.4 mm (0.039 – 0.055 in.)
Service limit "b" : 0.5 mm (0.019 in.)

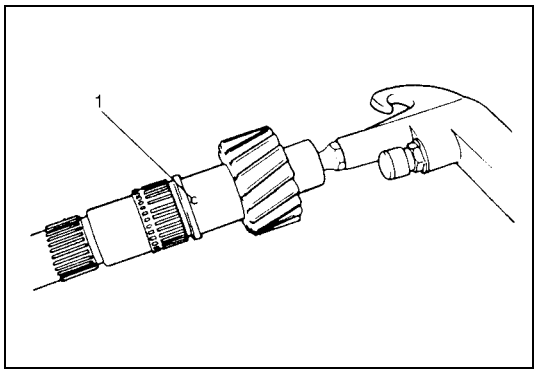

4) To ensure lubrication, air blow oil holes (1) and make sure that they are free from any obstruction.

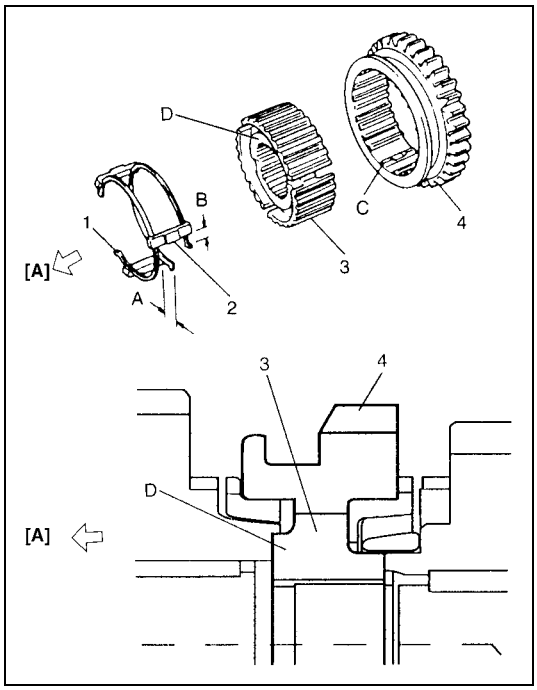

5) Fit low speed synchronizer sleeve (4) to hub (3), insert 3 keys (2) in it and then set springs (1) as shown in figure.

NOTE:

- **No specific direction is assigned to each key but it is assigned as sleeve & hub assembly.**
- **Size of low speed synchronizer keys and springs are the largest compared with those of high speed and 5th speed ones.**

Synchronizer key installation position
: A = B

[A] : 1st gear side
C : Key way
D : Short flange

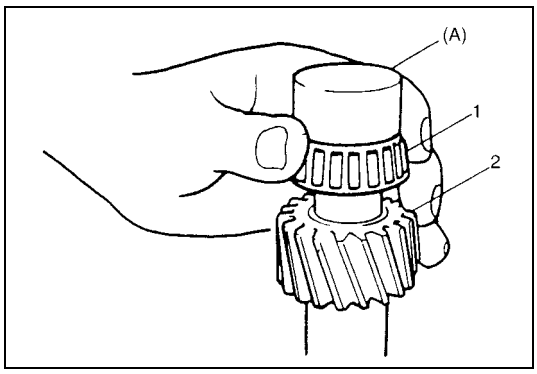

6) Install right bearing cone (1) to counter shaft (2) using special tool and hammer.

Special tool
(A) : 09923-78210

7) Install needle bearing of resin cage type, apply oil to it, then install 1st gear and 1st gear synchronizer ring.

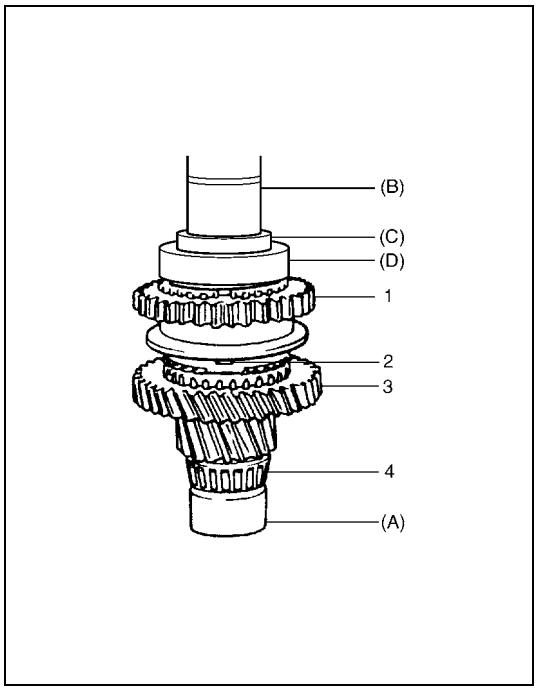

8) Drive in low speed sleeve & hub assembly (1) using special tools and hammer, facing “B” side of sleeve to 1st gear.

NOTE:

- **Support shaft with special tool as shown in figure so that retainer of bearing cone (4) will be free from compression.**
- **Make sure that synchronizer ring (2) key slots are aligned with keys while press-fitting sleeve & hub assembly.**
- **Check free rotation of 1st gear (3) after press-fitting sleeve & hub assembly.**

Special tool
(A) : 09923-78210
(B) : 09940-51710
(C) : 09924-07730
(D) : 09924-07710

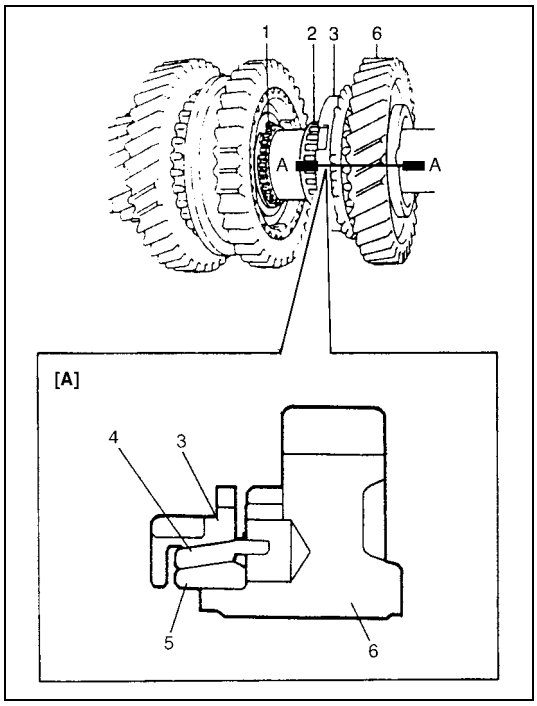

9) Install circlip (1) and confirm that circlip is installed in groove securely.
Install needle bearing (2) of separated steel cage type, apply oil to bearing.
With synchronizer outer ring (3), center cone (4) & inner ring (5) put together and installed to 2nd gear (6) as shown in figure.

[A] : SECTION A - A

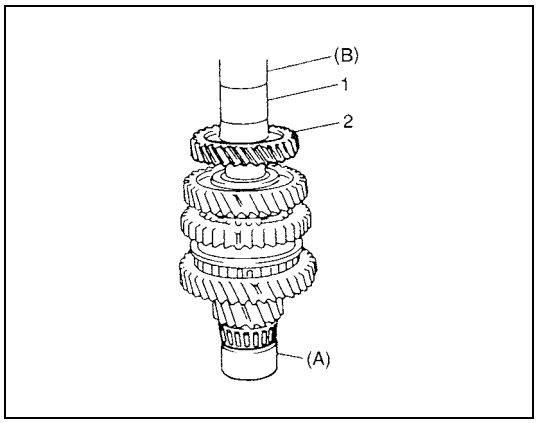

10) Press-fit 3rd gear (2) and spacer (1) using special tools and press.

CAUTION:
Press-fit 3rd gear (2) and spacer (1) first, and then 4th gear later separately so that counter shaft will not be compressed excessively.

Special tool
(A) : 09923-78210
(B) : 09913-84510

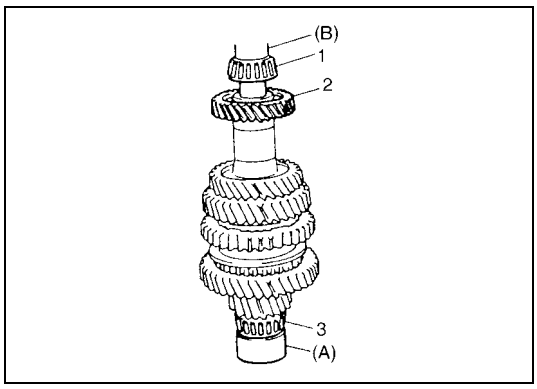

11) Press-fit 4th gear (2) using the same procedure as step 10).
12) Install left bearing cone (1) using special tools and hammer.

NOTE:
For protection of right bearing cone (3), always support shaft with special tool as illustrated.

Special tool
(A) : 09923-78210
(B) : 09913-80113

Gear Shift Shaft Components

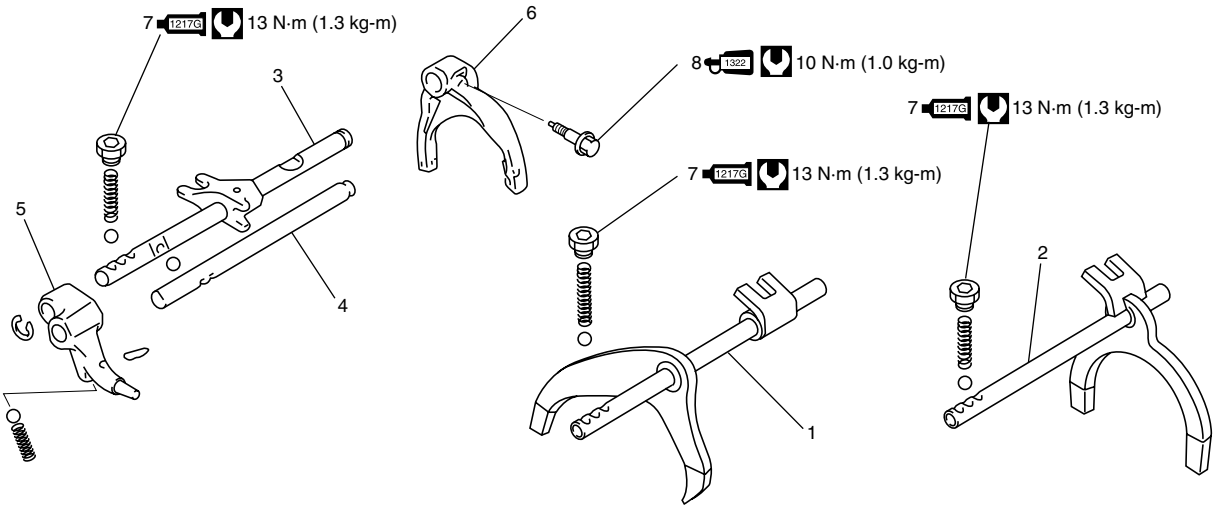

1. Low speed gear shift shaft	4. 5th & reverse gear shift guide shaft	1217G	7. Gear shift locating bolt : Apply sealant 99000-31260 to bolt thread.
2. High speed gear shift shaft	5. Reverse gear shift arm	1322	8. Shift fork bolt : Apply thread lock 99000-32110 to bolt thread.
3. 5th & reverse gear shift shaft	6. 5th gear shift fork		Tightening torque

High Speed and Low Speed Gear Shift Shafts Inspection

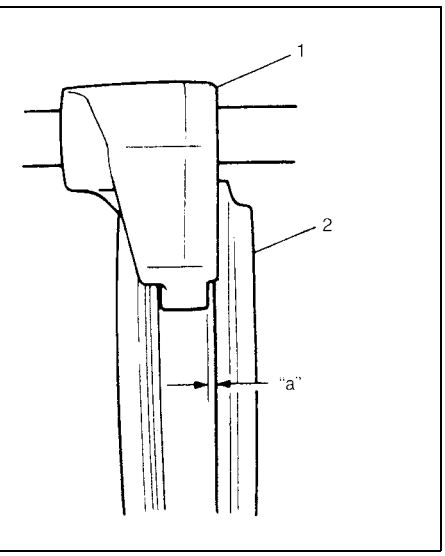

1) Using feeler gauge, check clearance between fork (1) and sleeve (2) and replace those parts if it exceeds limit below.

NOTE:

For correct judgement of parts replacement, carefully inspect contact portion of fork and sleeve.

Clearance between fork and sleeve
Service limit "a" : 1.0 mm (0.039 in.)

2) Insert each gear shift shaft into case and check that it moves smoothly. If it doesn't, correct using oilstone, reamer or the like.

5th & Reverse Gear Shift Shafts Disassembly and Assembly

Disassembly

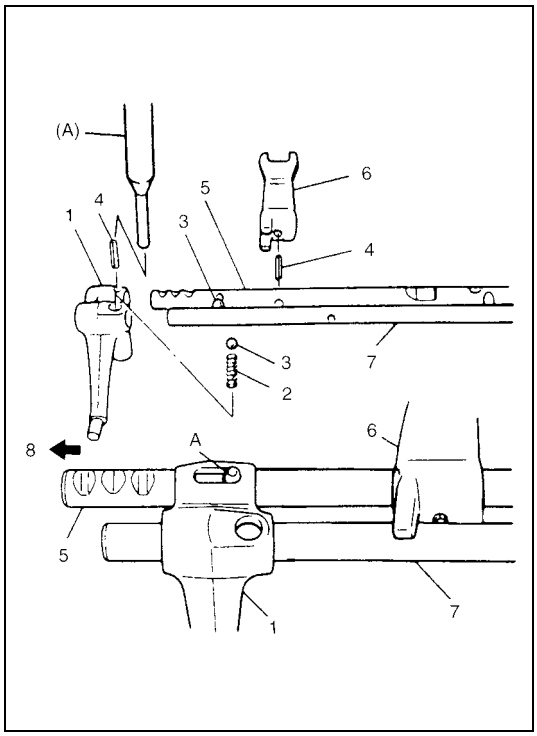

Disassemble component parts using special tool and hammer.

Special tool
(A) : 09922-85811

Assembly

Replace or correct parts as required and assemble shafts making sure that component parts are in proper order as shown in figure.

NOTE:

- **Distinguish reverse gear shift arm spring (Blue) (2) from low speed locating spring (Yellow).**
- **Install 2 steel balls (3) in reverse gear shift arm (1) without fail.**
- **Drive in spring pin for reverse gear shift arm (1) facing slit A toward 5th gear side.**

4. Spring pin	7. 5th & reverse gear shift guide shaft
5. 5th & reverse gear shift shaft	8. 5th gear side
6. 5th & reverse gear shift yoke	A: Face pin slit toward 5th gear side

Differential Components

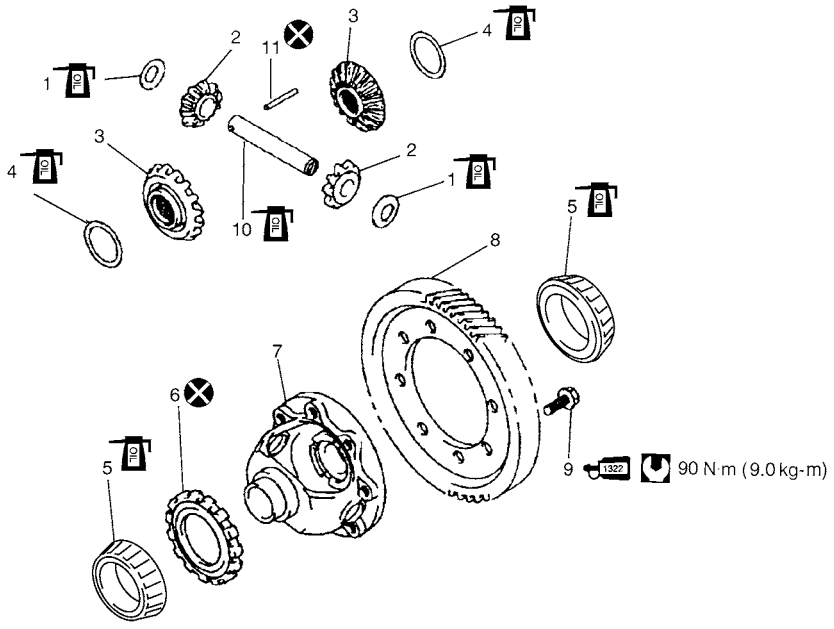

1. Differential pinion washer	8. Final gear
2. Differential side pinion gear	9. Final gear bolt : Apply thread lock 99000-32110 to all around thread part of bolt
3. Differential side gear	10. Differential pinion shaft
4. Side gear washer	11. Differential pinion shaft pin
5. Differential side bearing	Tightening torque
6. Speed sensor ring	Do not reuse.
7. Differential case	Apply transaxle oil.

Differential Disassembly and Assembly

Disassembly

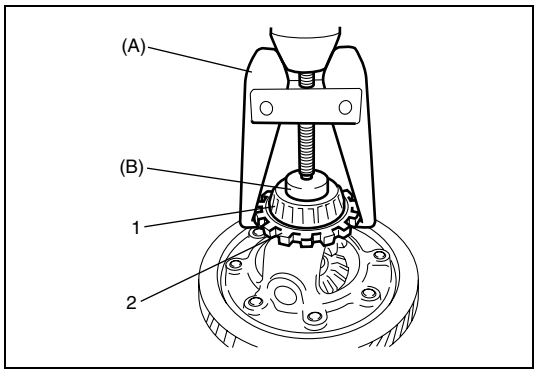

1) Using special tools, remove right bearing (1) and sensor rotor (2).

Special tool
(A) : 09913-60910
(B) : 09925-88210

2) Remove left bearing in the same manner at step 1).
3) Support differential case with soft jawed vise and remove final gear bolts then take out final gear.

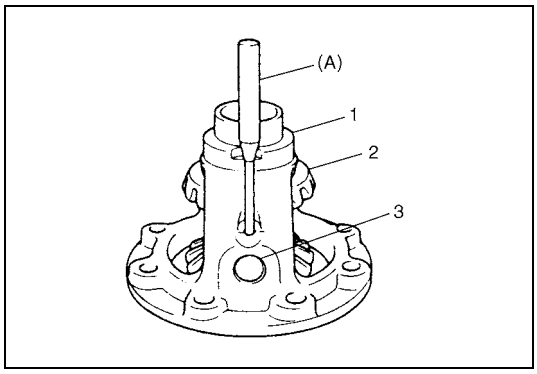

4) Using special tool and hammer, drive out differential pinion shaft pin and then disassemble component parts.

Special tool
(A) : 09922-85811

1. Differential case	
2. Differential gear	
3. Differential pinion shaft	

Assembly

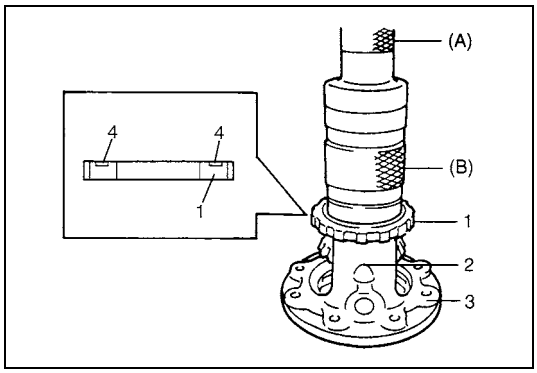

1) Drive in new differential pinion shaft pin (2) till the depth from differential case (3) surface is about 1 mm (0.04 in.).
2) Press-fit new sensor rotor (1) with groove (4) upward using special tools and copper hammer.

Special tool
(A) : 09913-76010
(B) : 09940-54910

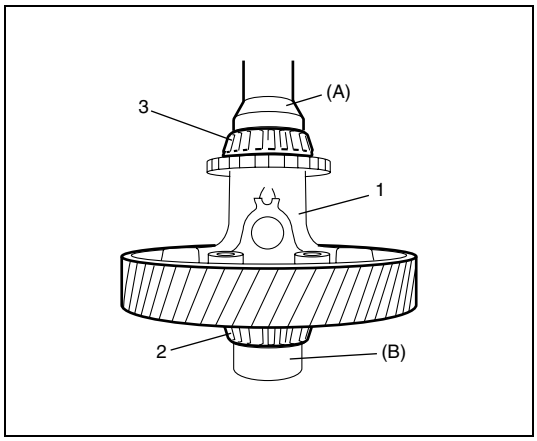

3) Press-fit left bearing (2) using special tools and copper hammer.

Special tool
(A) : 09913-76010

4) Support differential assembly (1) as illustrated so as to left bearing (2) is floating, and then press-fit right bearing (3) using special tool.

Special tool
(A) : 09913-76010
(B) : 09951-16060

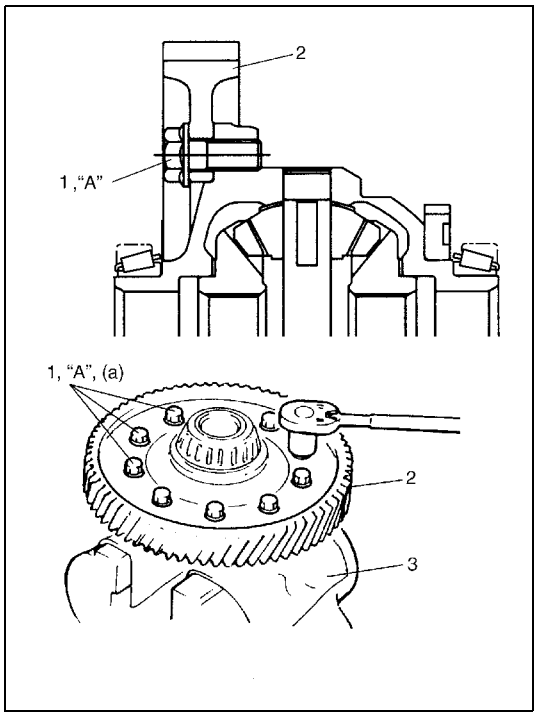

5) Hold differential assembly with soft jawed vise (3), install final gear (2) as shown in figure and then tighten bolts (1) with thread lock cement applied to specified torque.
Apply thread lock cement to bolt thread when reusing bolts.

CAUTION:
Use of any other bolts than specified ones is prohibited.

"A" : Thread lock cement 99000-32110

Tightening torque
Final gear bolt (a) : 90 N·m (9.0 kg-m, 65.0 lb-ft)

Differential Adjustment

Judging from abnormality noted before disassembly and what is found through visual check of component parts after disassembly, prepare replacing parts and proceed to reassembly. Make sure that all parts are clean.

1) Assemble differential gear and measure thrust play of differential gear as follows.

Differential gear thrust play
: 0.03 – 0.31 mm (0.001 – 0.012 in.)

- For left side

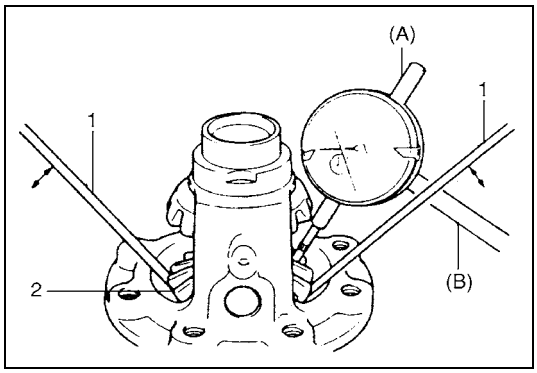

a) Hold differential assembly with soft jawed vise and apply measuring tip of dial gauge to top surface of gear.
b) Using 2 screwdrivers (1), move gear (2) up and down and read movement of dial gauge pointer.

Special tool
(A) : 09900-20606
(B) : 09900-20701

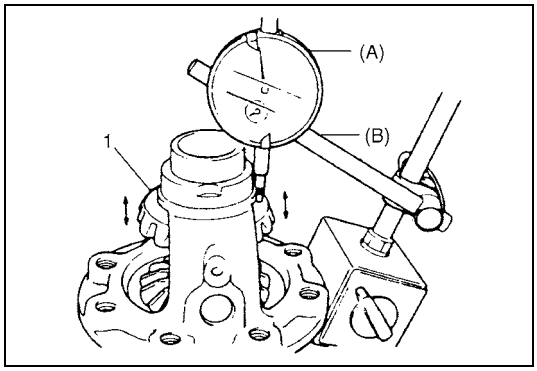

• For right side

a) Using similar procedure to the above, set dial gauge tip to gear (1) shoulder.
b) Move gear up and down by hand and read dial gauge.

Special tool
(A) : 09900-20606
(B) : 09900-20701

2) If thrust play is out of specification, select suitable thrust washer from among the following available size, install it and check again that specified gear play is obtained.

Available thrust washer thickness
0.9, 0.95, 1.0, 1.05, 1.1 and 1.15 mm
(0.035, 0.037, 0.039, 0.041, 0.043 and 0.045 in.)

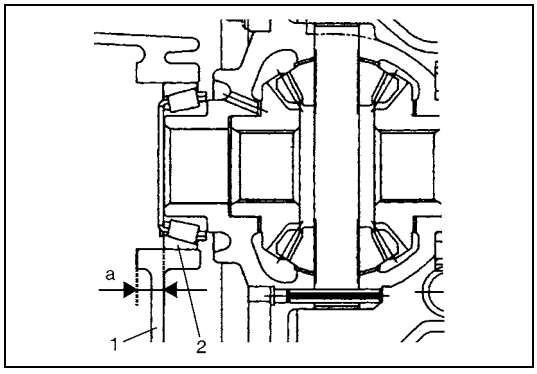

3) Measure depth “a” from left case (1) face to side bearing outer race (2) using depth gauge.

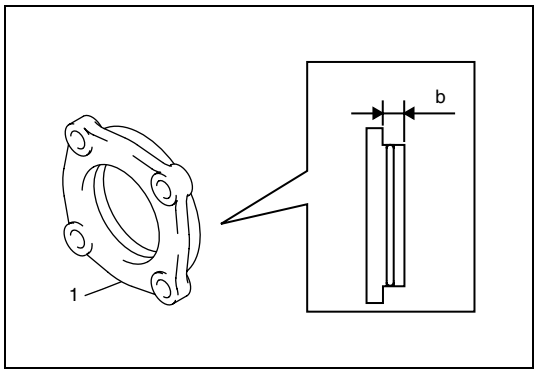

4) Measure height “b” of side bearing retainer (1) with depth gauge.

5) Calculate clearance a – b, and select differential shim according to the following table.

Bearing shim

Clearance a – b	Thickness of bearing shim to be installed
0.636 – 0.665 mm (0.0250 – 0.0261 in.)	0.75 mm (0.030 in.)
0.666 – 0.695 mm (0.0262 – 0.0273 in.)	0.78 mm (0.031 in.)
0.696 – 0.725 mm (0.0274 – 0.0285 in.)	0.81 mm (0.032 in.)
0.726 – 0.755 mm (0.0286 – 0.0297 in.)	0.84 mm (0.033 in.)
0.756 – 0.785 mm (0.0298 – 0.0309 in.)	0.87 mm (0.034 in.)
0.786 – 0.815 mm (0.0310 – 0.0320 in.)	0.90 mm (0.035 in.)
0.816 – 0.845 mm (0.0321 – 0.0332 in.)	0.93 mm (0.037 in.)
0.846 – 0.875 mm (0.0333 – 0.0344 in.)	0.96 mm (0.038 in.)
0.876 – 0.905 mm (0.0345 – 0.0356 in.)	0.99 mm (0.039 in.)
0.906 – 0.935 mm (0.0357 – 0.0368 in.)	1.02 mm (0.040 in.)
0.936 – 0.965 mm (0.0369 – 0.0379 in.)	1.05 mm (0.041 in.)
0.966 – 0.995 mm (0.0380 – 0.0391 in.)	1.08 mm (0.043 in.)
0.996 – 1.025mm (0.0392 – 0.0403 in.)	1.11 mm (0.044 in.)
1.026 – 1.055 mm (0.0404 – 0.0415 in.)	1.14 mm (0.045 in.)
1.056 – 1.085 mm (0.0416 – 0.0427 in.)	1.17 mm (0.046 in.)
1.086 – 1.115 mm (0.0428 – 0.0438 in.)	1.20 mm (0.047 in.)
1.116 – 1.145 mm (0.0439 – 0.0450 in.)	1.23 mm (0.048 in.)
1.146 – 1.175 mm (0.0451 – 0.0462 in.)	1.26 mm (0.050 in.)
1.176 – 1.205 mm (0.0463 – 0.0474 in.)	1.29 mm (0.051 in.)
1.206 – 1.235 mm (0.0475 – 0.0486 in.)	1.32 mm (0.052 in.)
1.236 – 1.265 mm (0.0487 – 0.0498 in.)	1.35 mm (0.053 in.)
1.266 – 1.295 mm (0.0499 – 0.0509 in.)	1.38 mm (0.054 in.)
1.296 – 1.325 mm (0.0510 – 0.0521 in.)	1.41 mm (0.056 in.)

Tightening Torque Specification

Fastening part	Tightening torque		
	N•m	kg-m	lb-ft
Transaxle oil level/filler and drain plugs	21	2.1	15.5
Oil gutter bolt	10	1.0	7.5
Final gear bolt	90	9.0	65.0
Reverse gear shift lever bolt	23	2.3	17.0
Transaxle case bolt	23	2.3	17.0
Reverse shaft bolt	23	2.3	17.0
Gear shift locating bolt	13	1.3	9.5
Left case plate bolt	23	2.3	17.0
Counter shaft nut	100	10.0	75.0
Side cover bolt	10	1.0	7.5
Gear shift guide case bolt	23	2.3	17.0
Side fork bolt	10	1.0	7.5

Fastening part	Tightening torque		
	N•m	kg-m	lb-ft
Gear shift interlock bolt	23	2.3	17.0
5th to reverse interlock guide bolt	23	2.3	17.0
Back up lamp switch	23	2.3	17.0
Gear shift control lever assembly mounting nut	13	1.3	9.5
Cable lock nut	5.5	0.55	4.0
Cable mounting bolt	5.5	0.55	4.0
Cable bracket bolt	55	5.5	42.0
Transaxle to engine bolt	61	6.1	45.0
Engine left mounting bracket bolt	55	5.5	42.0
Stiffener bolt	10	1.0	7.5
Engine rear mounting bolt	55	5.5	42.0
Engine rear mounting No.2 bracket bolt	55	5.5	42.0
Transaxle to engine rear mounting No.2 bracket bolt	55	5.5	42.0
Transaxle to engine nut	61	6.1	45.0
Clutch housing lower plate bolt	55	5.5	42.0
VSS bolt	5.5	0.55	4.0
Select lever bracket bolt	23	2.3	17.5
Side bearing retainer bolt	23	2.3	17.0

Required Service Material

Material	Recommended SUZUKI product (Part Number)	Use
Lithium grease	SUZUKI SUPER GREASE A (99000-25010)	• Oil seal lips • O-rings • Select lever boss • Select lever shaft bush
Sealant	SUZUKI BOND NO.1217G (99000-31260)	• Oil drain plug and filler/level plug • Locating spring bolts • Mating surface of transaxle case • Mating surface of side cover • Gear shift interlock bolt • 5th to reverse interlock guide bolt • Guide case bolts
Thread lock cement	THREAD LOCK 1322 (99000-32110)	• Reverse gear shift lever bolts • Oil gutter bolt • Reverse shaft bolt • Final gear bolts • Left case plate bolts • Shift fork bolt

Special Tool

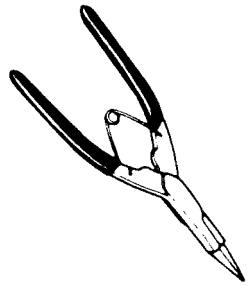 09900-06107 Snap ring pliers (Opening type)	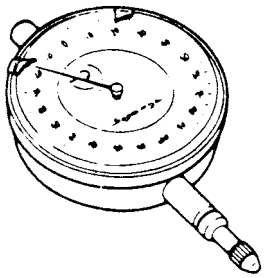 09900-20606 Dial gauge	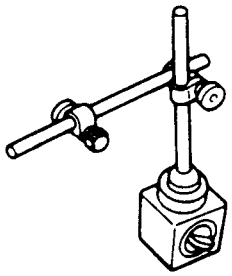 09900-20701 Magnetic stand	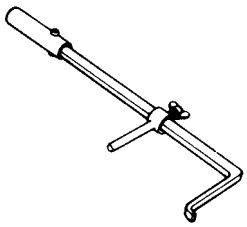 09913-50121-000 Oil seal remover
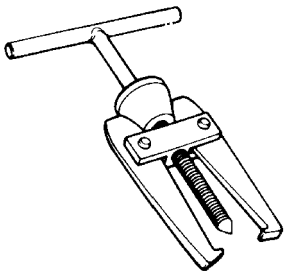 09913-60910 Bearing puller	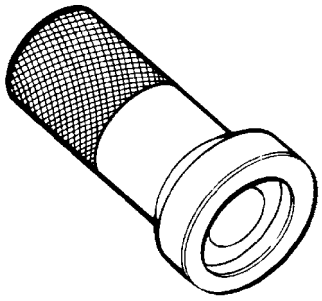 09913-70123-000 Bearing installing tool	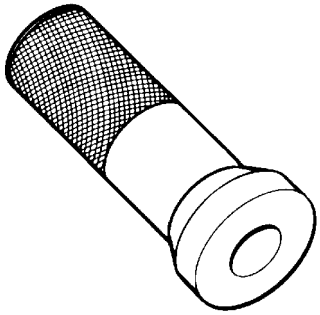 09913-76010-000 Differential bearing race installer	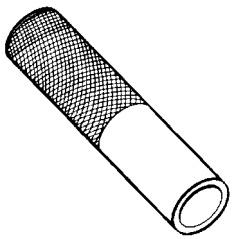 09913-80113 Bearing installer
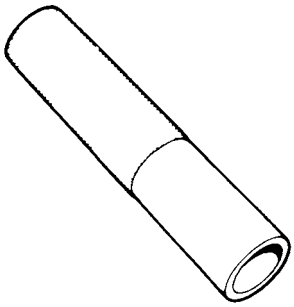 09913-84510 Bearing installer	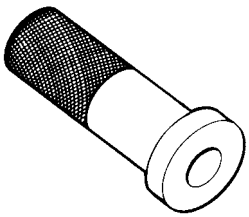 09913-85210-000 Bearing pulling holder	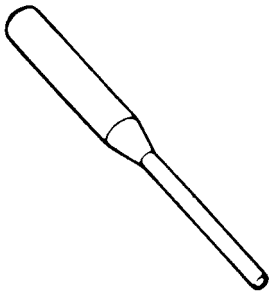 09922-85811 Spring pin remover 4.5 mm (0.18 in.)	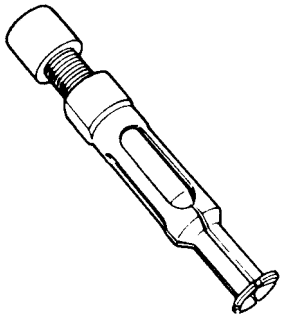 09923-74510 Bearing remover
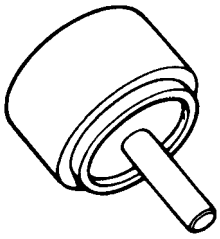 09923-78210 Bearing installer	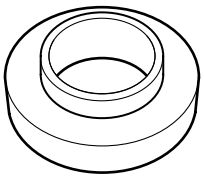 09924-07710-000 Synchronizer hub, installer	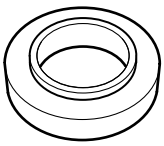 09924-07730-000 Bearing installer	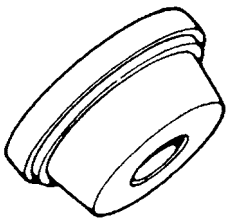 09924-84510-004 Installer, bearing

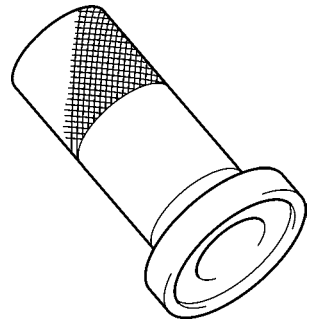 09925-15410-000 Oil seal installer	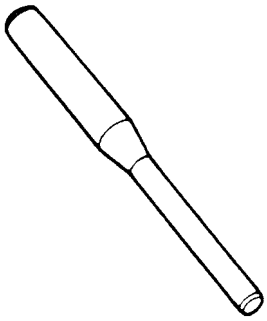 09925-78210 Spring pin remover 6 mm (0.24 in.)	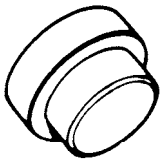 09925-88210 Bearing puller attachment	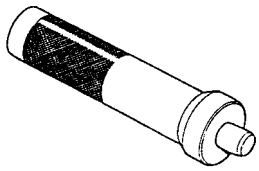 09925-98210-000 Installer, input shaft bearing
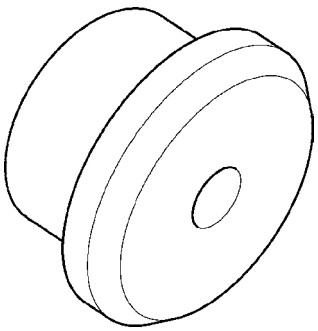 09926-27610-000 Oil seal installer	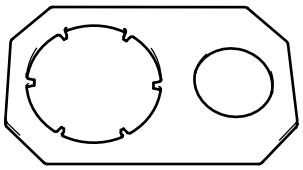 09927-76060-000 Gear holder	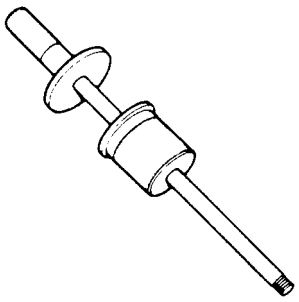 09930-30104 Sliding shaft	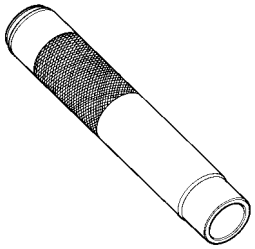 09940-51710-000 Bearing, installer
 09940-54910 Sensor rotor installer	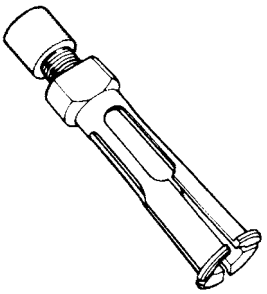 09941-64511 Bearing remover	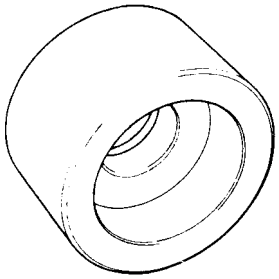 09951-16060 Bush remover	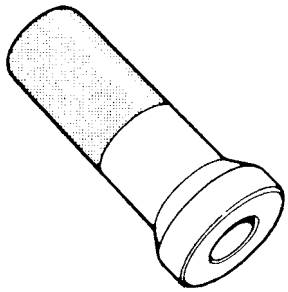 09951-16080-000 Installer, bearing

SECTION 7B

AUTOMATIC TRANSAXLE

WARNING:

For vehicles equipped with Supplemental Restraint (Air Bag) System :

- **Service on and around the air bag system components or wiring must be performed only by an authorized SUZUKI dealer. Refer to "System Components and Wiring Location View" under "General Description" in Section 10B in order to confirm whether you are performing service on or near the air bag system components or wiring. Please observe all WARNINGS and "Service Precautions" under "On-Vehicle Service" in Section 10B before performing service on or around the air bag system components or wiring. Failure to follow WARNINGS could result in unintentional activation of the system or could render the system inoperative. Either of these two conditions may result in severe injury.**
- **Technical service work must be started at least 90 seconds after the ignition switch is turned to the "LOCK" position and the negative cable is disconnected from the battery. Otherwise, the system may be activated by reserve energy in the Sensing and Diagnostic Module (SDM).**

CONTENTS

General Description 7B-3
- Specifications 7B-5
- Clutch/Brake/Planetary Gear Functions 7B-6
- Table of Component Operation 7B-7
- Electronic Shift Control System 7B-8
- Transmission Control Module (TCM) 7B-10
  - Operation of shift solenoid valves, timing solenoid valve and TCC solenoid valve 7B-11
  - Automatic gear shift diagram 7B-12

Diagnosis 7B-13
- General Description 7B-13
- On-board Diagnostic System 7B-14
- Precaution in Diagnosing Trouble 7B-15
- Automatic Transaxle Diagnostic Flow Table 7B-16
- "O/D OFF" Lamp Check 7B-20
- Malfunction Indicator Lamp (MIL) Check 7B-20
- Diagnostic Trouble Code (DTC) Check 7B-20
- Diagnostic Trouble Code (DTC) Clearance 7B-21
- Diagnostic Trouble Code (DTC) Table 7B-22
- Fail Safe Table 7B-24
- Visual Inspection 7B-26
- Automatic Transaxle Basic Check 7B-27
- Trouble Diagnosis Table 7B-28
  - Trouble diagnosis table-1 ..... 7B-28
  - Trouble diagnosis table-2 ..... 7B-31
  - Trouble diagnosis table-3 ..... 7B-33
- Road Test 7B-34
- Manual Road Test 7B-37
- Engine Brake Test 7B-38
- Stall Test 7B-39
- Time Lag Test 7B-40
- Line Pressure Test 7B-41
- "P" Range Test 7B-42
- Diagnostic Flow Table A-1: No Gear Shift to O/D 7B-43
- Diagnostic Flow Table A-2: No Lock-Up Occurs 7B-44
- Diagnostic Flow Table A-3: "O/D OFF" Lamp Circuit Check ("O/D OFF" Lamp Lights Steadily) 7B-45
- Diagnostic Flow Table A-4: "O/D OFF" Lamp Circuit Check ("O/D OFF" Lamp Does Not Light Anytime) 7B-47
- Diagnostic Flow Table A-5: TCM Power and Ground Circuit Check 7B-48
- DTC P0705 Transmission Range Sensor Circuit Malfunction 7B-50
- DTC P0707 Transmission Range Sensor Circuit Low 7B-53
- DTC P0712 Transmission Fluid Temperature Sensor Circuit Low 7B-56
- DTC P0713 Transmission Fluid Temperature Sensor Circuit High 7B-58
- DTC P0717 Input/Turbine Speed Sensor Circuit Malfunction 7B-60
- DTC P0722 Output Speed Sensor (VSS) Circuit No Signal 7B-62

DTC P0741/P0742 TCC Circuit Performance or Stuck OFF/TCC Circuit Stuck ON 7B-65
DTC P0751/P0752/P0756/P0757 Shift Solenoid-A (No.1) Performance or Stuck OFF/Shift Solenoid-A (No.1) Stuck ON/Shift Solenoid-B (No.2) Performance or Stuck OFF/Shift Solenoid-B (No.2) Stuck ON 7B-66
DTC P0785 Timing Solenoid 7B-68
DTC P0962 Pressure Control Solenoid Control Circuit Low 7B-70
DTC P0963 Pressure Control Solenoid Control Circuit High 7B-72
DTC P0974/P0977 Shift Solenoid-A (No.1) Control Circuit High/Shift Solenoid-B (No.2) Control Circuit High 7B-74
DTC P1701 CAN Communication Error 7B-76
DTC P1702 Internal Control Module Memory Check Sum Error 7B-78
DTC P1703 CAN Invalid Data-TCM 7B-78
DTC P2769 Torque Converter Clutch (TCC) Circuit Low 7B-79
DTC P2770 Torque Converter Clutch (TCC) Circuit High 7B-81
Scan Tool Data 7B-83
Inspection of TCM and Its Circuits 7B-87
On-Vehicle Service 7B-91
Maintenance Service 7B-91
Fluid level check at normal operating (hot) temperature (Hot check) 7B-91
Fluid level check at room (cold) temperature (Cold check) 7B-92
Fluid change 7B-92
A/T fluid cooler hoses 7B-93
Selector Lever 7B-94
Select Cable 7B-95
Transmission Range Sensor (Shift Switch) 7B-97
Output Shaft Speed Sensor (VSS) 7B-98
Input Shaft Speed Sensor 7B-99
Throttle Position Sensor 7B-99
Engine Coolant Temperature Sensor 7B-100
O/D Off Switch 7B-100
Solenoid Valves (Shift Solenoid Valves, TCC Solenoid Valve and Timing Solenoid Valve) 7B-101
Pressure Control Solenoid Valve 7B-106
Transmission Control Module (TCM) 7B-109
A/T Relay 7B-110
Transmission Fluid Temperature Sensor 7B-111
Differential Side Oil Seal 7B-113
Automatic Transaxle Assembly 7B-115
Unit Repair 7B-118
Precautions 7B-118
Part Inspection and Correction Table 7B-119
Unit Disassembly 7B-120
Components 7B-120
Disassembly/Assembly of Subassembly 7B-141
Oil pump assembly 7B-142
Direct clutch assembly 7B-146
Forward and reverse clutch assembly 7B-151
2nd brake piston assembly 7B-159
Transaxle rear cover assembly (O/D and 2nd coast brake piston) 7B-161
Differential Assembly 7B-164
Countershaft assembly 7B-168
Valve body assembly 7B-170
Torque converter housing 7B-172
Transaxle case 7B-175
Adjustment before unit assembly 7B-177
Unit Assembly 7B-180
Tightening Torque Specification 7B-203
Special Tool 7B-204
Required Service Material 7B-206

General Description

This automatic transaxle is electronic control full automatic transaxle with forward 3-speed plus overdrive (O/D) and reverse 1-speed.

The torque converter is a 3-element, 1-step and 2-phase type and is equipped with an automatically controlled lock-up mechanism.

The gear change device consists of a ravigneau type planetary gear unit, 3 multiple disc type clutches, 3 multiple disc type brakes and 2 one-way clutches.

The hydraulic pressure control device consists of a valve body assembly, pressure control solenoid valve (linear solenoid), 2 shift solenoid valves, TCC (lock-up) solenoid valve and a timing solenoid valve. Optimum line pressure complying with engine torque is produced by the pressure control solenoid valve in dependence upon control signal from transmission control module (TCM). This makes it possible to control the line pressure with high accuracy in accordance with the engine power and running conditions to achieve smooth shifting characteristics and high efficiency.

A clutch-to-clutch control system is provided for shifting between 3rd gear and 4th gear. This clutch-to-clutch control system is made to function optimally, so that hydraulic pressure controls such as shown below are conducted.

- When upshifting from 3rd gear to 4th gear, to adjust the drain hydraulic pressure at releasing the forward clutch, a timing solenoid valve is used to switch a hydraulic passage with an orifice to another during shifting.
- When downshifting from 4th gear to 3rd gear, to adjust the line pressure applied to the forward clutch at engaging the forward clutch, a timing solenoid valve is used to switch a hydraulic passage with an orifice to another during shifting.
- When upshifting from 3rd gear to 4th gear with engine throttle opened, to optimize the line pressure applied to the forward clutch at releasing the forward clutch, the learning control is processed to compensate the switching timing of the timing solenoid at every shifting.
- When downshifting from 4th gear to 3rd gear with engine throttle opened, to optimize the line pressure applied to the forward clutch at engaging the forward clutch, the learning control is processed to compensate the line pressure every shifting.

Employing a ravigneau type planetary gear unit and this clutch-to-clutch control system greatly simplifies the construction to make possible a lightweight and compact transaxle.

A line pressure learning control is conducted to provide optimum shifting time at every upshifting with engine throttle opened. If long upshifting time is detected, the subsequent line pressure applied during upshifting is intensified. On the contrary, if short upshifting time is detected, the subsequent line pressure applied during upshifting is weakened.

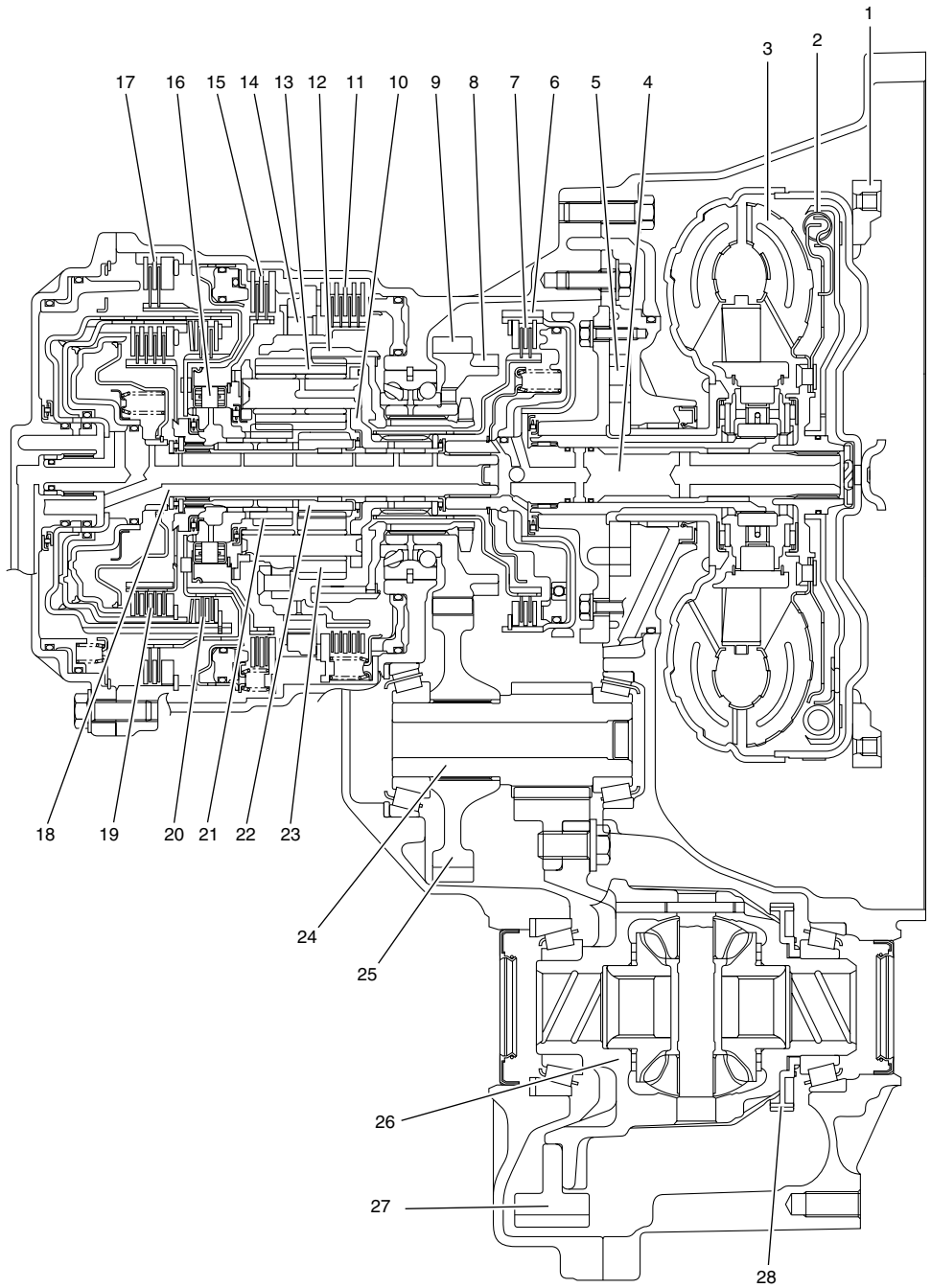

1. Drive plate	11. 1st and reverse brake	21. Rear sun gear
2. Torque converter clutch (TCC)	12. Ring gear	22. Front sun gear
3. Torque converter	13. Long planet pinion	23. Short planet pinion
4. Input shaft	14. One-way No.2 clutch	24. Countershaft
5. Oil pump	15. 2nd brake	25. Reduction driven gear
6. Direct clutch drum (double as sensor rotor for input shaft speed sensor)	16. One-way No.1 clutch	26. Differential case assembly
7. Direct clutch	17. O/D and 2nd coast brake	27. Final gear
8. Parking lock gear	18. Intermediate shaft	28. Output shaft speed sensor (VSS) drive gear
9. Reduction drive gear	19. Forward clutch	
10. Planet carrier	20. Reverse clutch	

Specifications

Item			Specifications		
Torque converter	Type Stall torque ratio		3-element, 1-step, 2-phase type (with TCC (lock-up) mechanism) 1.9 – 2.1		
Oil pump	Type Drive system		Internal involute gear type oil pump (non crescent type) Engine driven		
Gear change device	Type		Forward 4-step, reverse 1-step planetary gear type		
	Shift position		"P" range	Gear in neutral, output shaft fixed, engine start	
			"R" range	Reverse	
			"N" range	Gear in neutral, engine start	
			"D" range (O/D ON)	Forward 1st ↔ 2nd ↔ 3rd ↔ 4th (O/D) automatic gear change	
			"D" range (O/D OFF)	Forward 1st ↔ 2nd ↔ 3rd ← 4th automatic gear change	
			"2" range	Forward 1st ↔ 2nd ← 3rd automatic gear change	
			"L" range	Forward 1st ← 2nd ← 3rd reduction, and fixed at 1st gear	
	Gear ratio	1st	2.875	Number of teeth	Front sun gear: 24 Rear sun gear: 30 Long planet pinion: 20 Short planet pinion: 19 Ring gear: 69
		2nd	1.568		
		3rd	1.000		
		4th (overdrive gear)	0.697		
		Reverse (reverse gear)	2.300		
	Control elements		Wet type multiple-disc clutch ... 3 sets Wet type multiple-disc brake ... 3 sets One-way clutch ... 2 sets		
	Reduction gear ratio		1.019		
	Final gear reduction ratio		4.052		
Lubrication	Lubrication system		Force feed system by oil pump		
Cooling	Cooling system		Radiator assisted cooling (water-cooled)		
Fluid used			DEXRON®-III		

Clutch/Brake/Planetary Gear

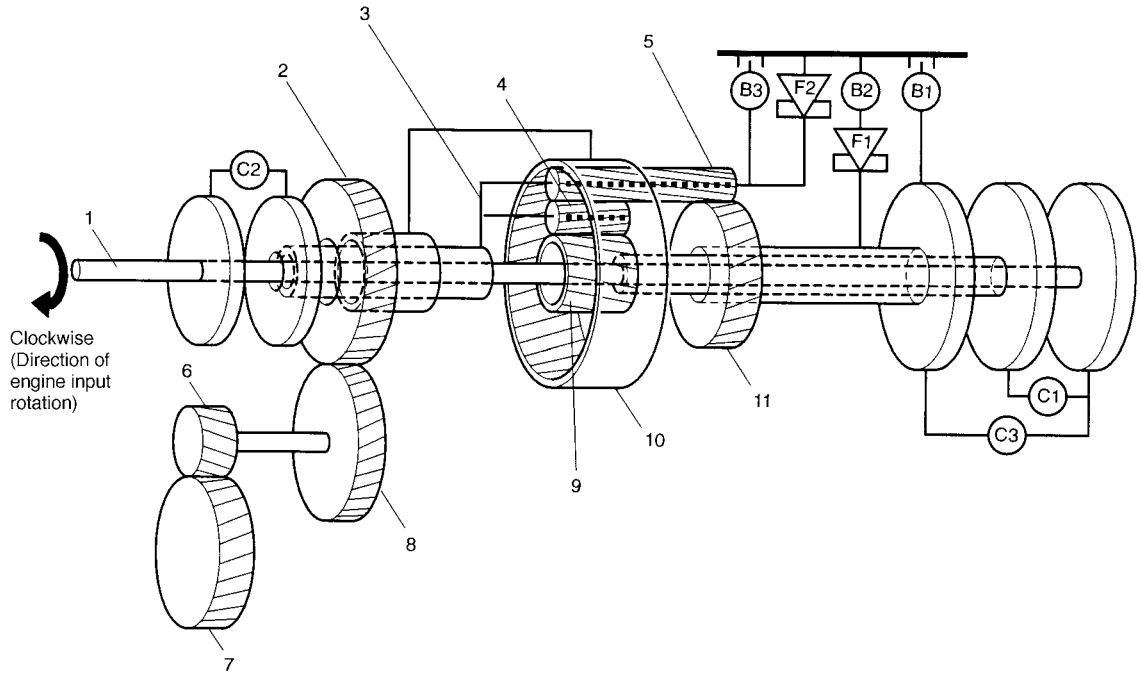

1. Input shaft and intermediate shaft	8. Reduction driven gear	B1: O/D and 2nd coast brake
2. Reduction drive gear	9. Front sun gear	B2: 2nd brake
3. Planet carrier	10. Ring gear	B3: 1st and reverse brake
4. Short planet pinion	11. Rear sun gear	F1: One-way No.1 clutch
5. Long planet pinion	C1: Forward clutch	F2: One-way No.2 clutch
6. Final drive gear	C2: Direct clutch	
7. Final driven gear	C3: Reverse clutch	

Functions

PART NAME	FUNCTION
Forward clutch	Meshes intermediate shaft and front sun gear
Direct clutch	Meshes input shaft and planet carrier
Reverse clutch	Meshes intermediate shaft and rear sun gear
O/D and 2nd coast brake	Fixes rear sun gear
2nd brake	Fixes rear sun gear
1st and reverse brake	Fixes planet carrier
One-way No.1 clutch	Prevents rear sun gear from turning counterclockwise
One-way No.2 clutch	Prevents planet carrier from turning counterclockwise

Table of Component Operation

Selector position	Part / Gear position	Shift solenoid valve-A (No.1)	Shift solenoid valve-B (No.2)	TCC solenoid valve	Forward clutch	Direct clutch	Reverse clutch	O/D and 2nd coast brake	2nd brake	1st and reverse brake	One-way No.1 clutch	One-way No.2 clutch
P	Parking	○	○	×	×	×	×	×	×	×	×	×
R	Reverse	○	○	×	×	×	○	×	×	○	×	×
N	Neutral	○	○	×	×	×	×	×	×	×	×	×
D	1st	○	○	×	○	×	×	×	×	×	×	○
	2nd	○	×	×	○	×	×	×	○	×	○	×
	3rd	×	×	△	○	○	×	×	○	×	×	×
	4th	×	○	△	×	○	×	○	○	×	×	×
2	1st	○	○	×	○	×	×	×	×	×	×	○
	2nd	○	×	×	○	×	×	○	○	×	○	×
L	1st	○	○	×	○	×	×	×	×	○	×	○

○ : ON　　× : OFF　　△ : ON only when TCC is operating

Electronic Shift Control System

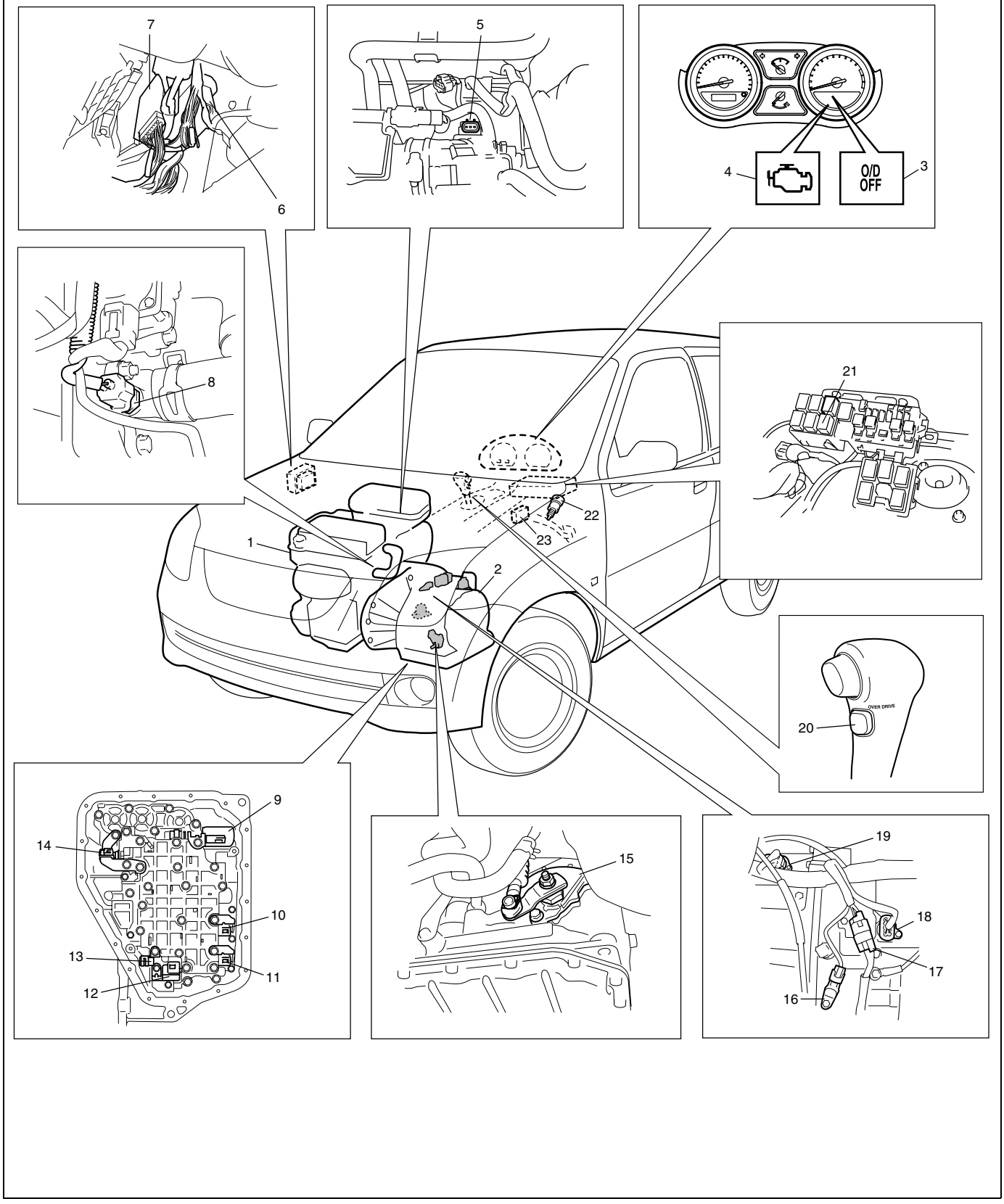

1. Engine	9. Pressure control solenoid valve	17. Transmission range sensor coupler
2. Transaxle	10. Shift solenoid valve-B (No.2)	18. Solenoid valve coupler
3. “O/D OFF” lamp	11. Shift solenoid valve-A (No.1)	19. Output shaft speed sensor (VSS)
4. MIL	12. Timing solenoid valve	20. O/D OFF switch
5. Throttle position (TP) sensor	13. Transmission fluid temperature sensor	21. A/T relay
6. ECM	14. TCC (lock-up) solenoid valve	22. Brake light switch
7. TCM	15. Transmission range sensor	23. Data link connector (DLC)
8. Engine coolant temperature (ECT) sensor	16. Input shaft speed sensor	

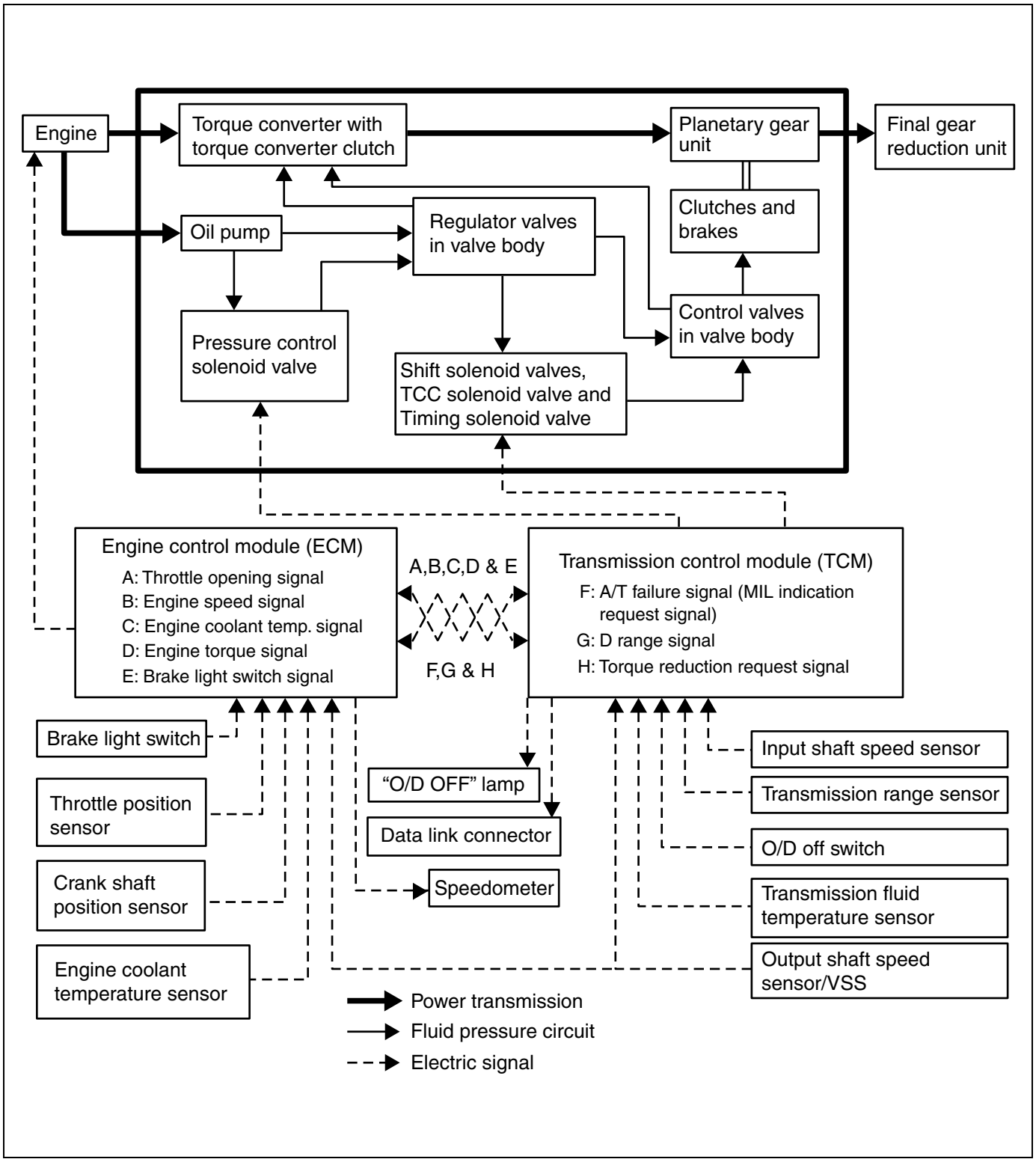

Transmission Control Module (TCM)

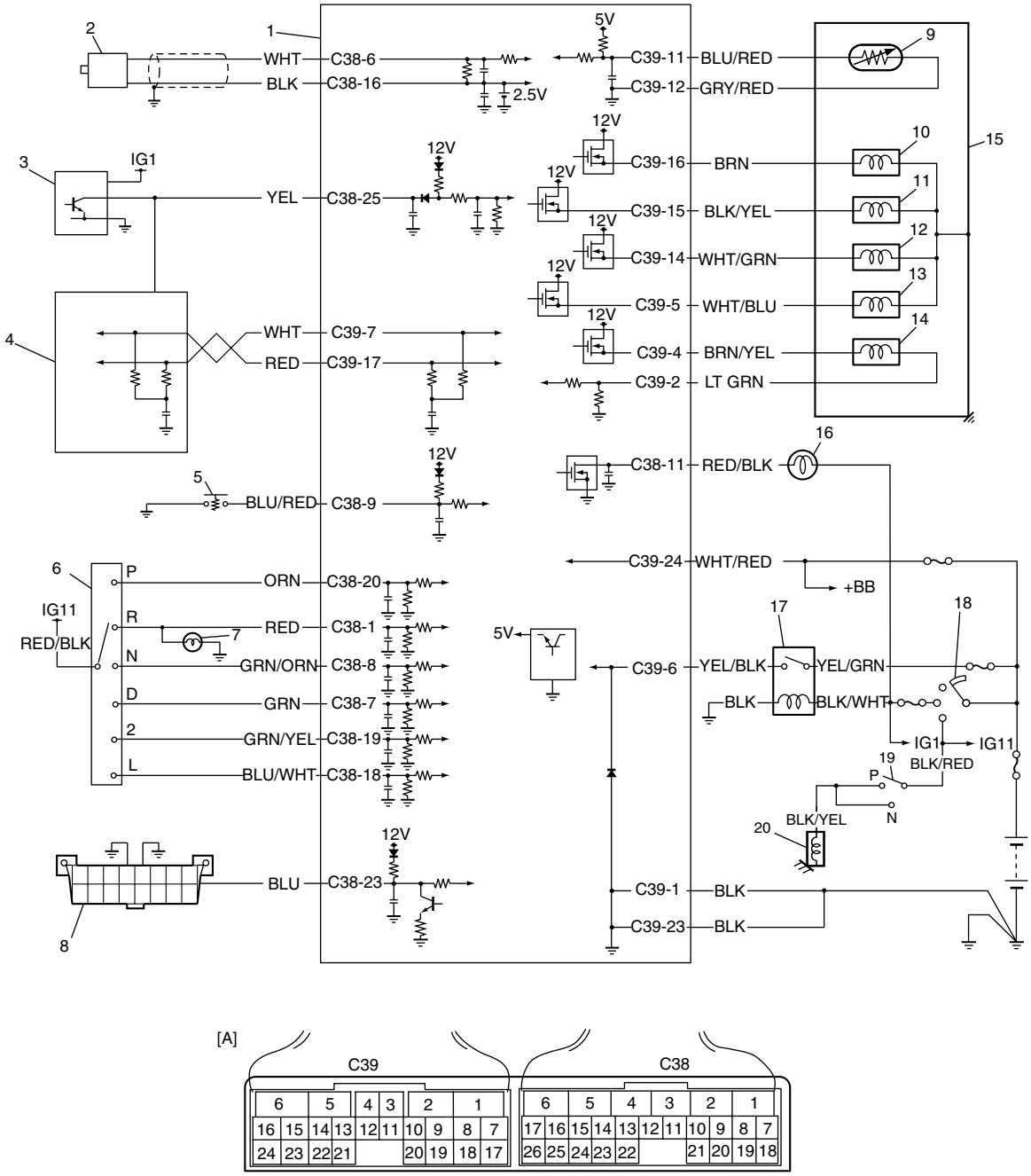

6	5	4	3	2	1
16	15	14	13	12	11	10	9	8	7
24	23	22	21			20	19	18	17

6	5	4	3	2	1
17	16	15	14	13	12	11	10	9	8	7
26	25	24	23	22			21	20	19	18

1. TCM	8. Data link connector (DLC)	15. A/T
2. Input shaft speed sensor	9. Transmission fluid temperature sensor	16. “O/D OFF” lamp
3. Output shaft speed sensor (VSS)	10. Shift solenoid valve-A (No.1)	17. A/T relay
4. ECM	11. Shift solenoid valve-B (No.2)	18. Ignition switch
5. O/D off switch	12. Timing solenoid valve	19. Inhibitor switch
6. Transmission range sensor	13. TCC (lock-up) solenoid valve	20. Starter motor relay
7. Backup lamp	14. Pressure control solenoid valve	[A]: Terminal arrangement of TCM connector (viewed from harness)

Operation of shift solenoid valves, timing solenoid valve and TCC solenoid valve

Selector position	Solenoid / Gear position	Shift solenoid valve-A (No.1)	Shift solenoid valve-B (No.2)	Timing solenoid valve	TCC solenoid valve	Condition
P	Parking	○	○	×	×	
R	Reverse	○	○	×	×	When vehicle is traveling forwards in less than 9 km/h, 6 mile/h vehicle speed.
		○	○	○	×	When vehicle is traveling forwards in 11km/h, 7mile/h or more vehicle speed.
	(Reverse)	×	×	×	×	When fail safe function is operating.
N	Neutral	○	○	×	×	
D	Neutral → 1st			○		Timing solenoid is turned ON for about 0.5 sec. while on gear shifting
	1st	○	○	×	×	
	2nd	○	×	×	×	
	3rd	×	×	×	△	
	3rd ↔ 4th			○		Timing solenoid is turned ON for about 0.5 sec. while on gear shifting
	4th (O/D)	×	○	×	△	
	(3rd)	×	×	×	×	When fail safe function is operating.
2	1st	○	○	×	×	
	2nd	○	×	×	×	
	(3rd)	×	×	×	×	When fail safe function is operating.
L	1st	○	○	×	×	
	(3rd)	×	×	×	×	When fail safe function is operating.

○ : ON (Turn power ON)
× : OFF (Turn power OFF)
△ : ON only when TCC is operating

	Valve status	
	Turn power ON	Turn power OFF
Shift solenoid valve-A (No.1)	Close	Open
Shift solenoid valve-B (No.2)	Close	Open
Timing solenoid	Open	Close
TCC (lock-up) solenoid	Close	Open

Automatic gear shift diagram

Automatic shift schedule as a result of shift control is shown below. In case that selector lever is shifted to “L” range at a higher than 49 km/h (30 mile/h) speed, 2nd gear is operated and then down shifts to 1st at a speed lower than that.
The same as, the select lever is shifted to “2” range at a higher than 97 km/h (60 mile/h) speed, 3rd gear is operated and then down shifts to 2nd at a speed lower than that.

	Shift					
Throttle opening	1→2	2→3	3→4	4→3	3→2	2→1
Full throttle km/h (mile/h)	49 (30)	97 (60)	154 (96)	139 (86)	78 (48)	40 (25)
Closed throttle km/h (mile/h)	12 (8)	27 (17)	45 (28)	30 (19)	19 (12)	10 (6)

Gear Shift Diagram [A] and TCC Lock-up Diagram [B]

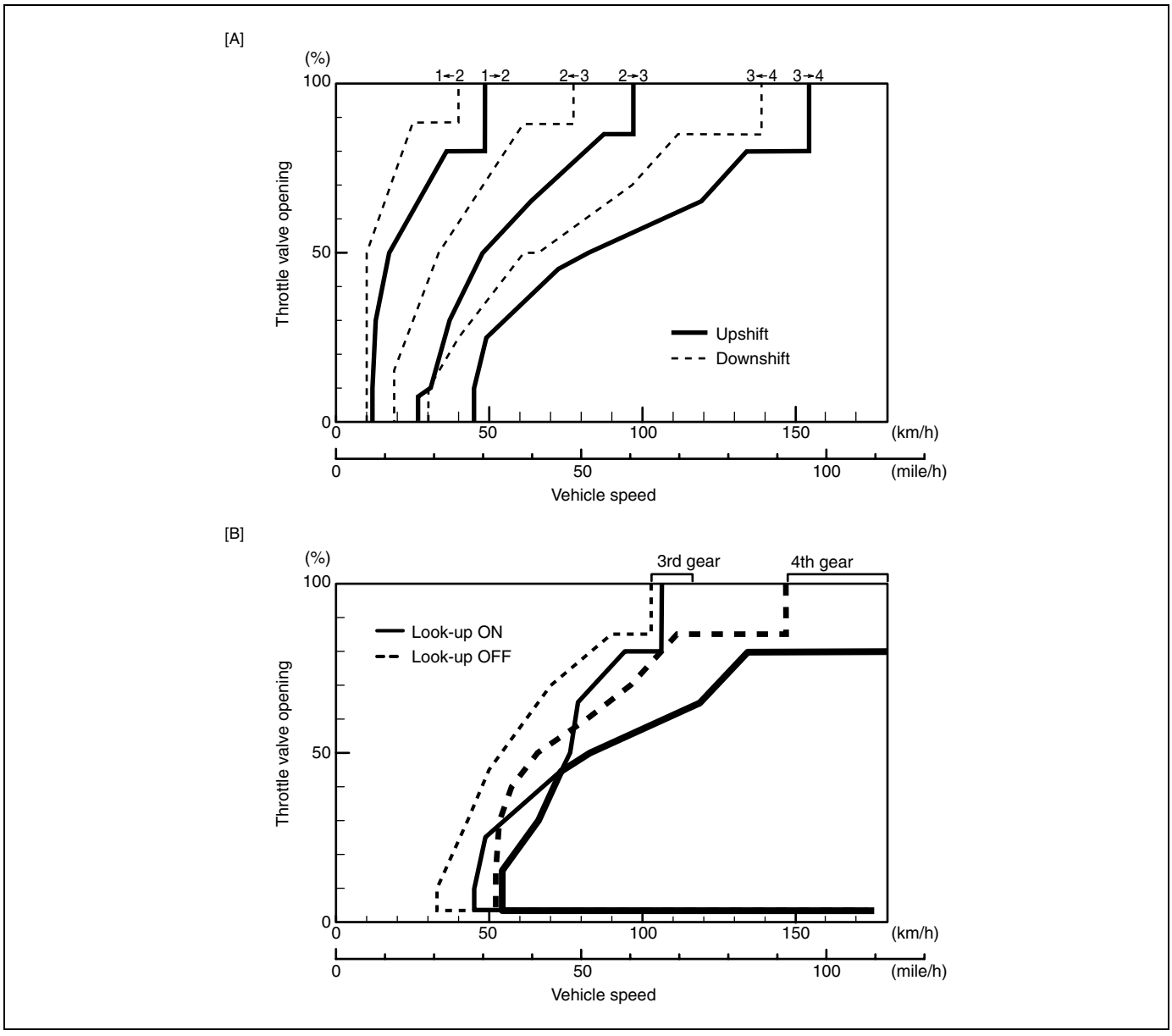

Diagnosis

General Description

This vehicle is equipped with an electronic transaxle control system, which controls the automatic shift up and shift down timing, TCC operation, etc. suitably to vehicle driving conditions.
TCM has an On-Board Diagnosis System which detects a malfunction in this system.
When diagnosing a trouble in transaxle including this system, be sure to have full understanding of the outline of “On-Board Diagnostic System” and each item in “Precaution in Diagnosing Trouble” and execute diagnosis according to “Automatic Transaxle Diagnostic Flow Table” given below to obtain correct result smoothly.

On-board Diagnostic System

For automatic transaxle control system, TCM has following functions.

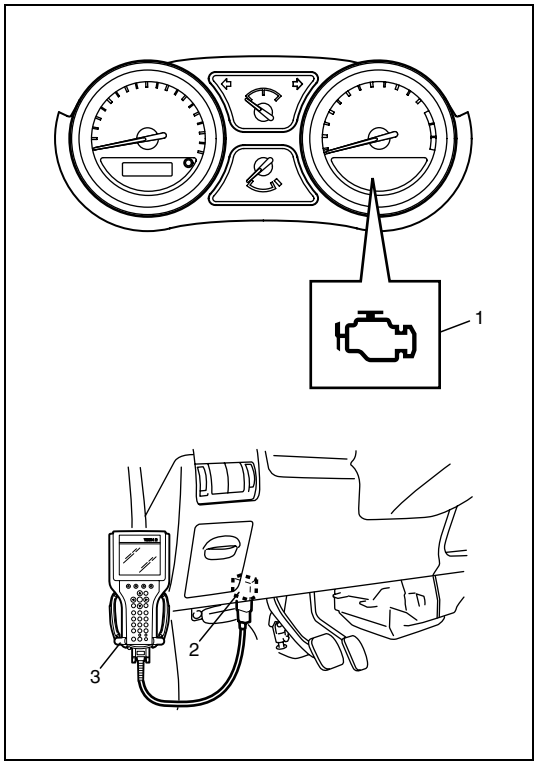

- When ignition switch is turned ON with O/D off switch turned OFF and no malfunction in A/T control system is detected, “O/D OFF” lamp (1) lights for about 2 seconds after ignition switch is turned ON and then goes OFF for bulb check.
- When TCM detects a malfunction in A/T control system, TCM desire turning on malfunction indicator lamp (MIL) (1) to ECM and stores malfunction DTC in TCM memory.
- It is possible to communicate with TCM through data link connector (DLC) (2) by using scan tool (3). (Diagnostic information can be checked and erased by using scan tool.)

Warm-up Cycle

A warm-up cycle means sufficient vehicle operation such that the coolant temperature has risen by at least 22°C (40°F) from engine starting and reaches a minimum temperature of 70°C (160°F).

Driving Cycle

A “Driving Cycle” consists of engine startup, driving mode where a malfunction would be detected if present, and engine shutoff.

2 Driving Cycles Detection Logic

The malfunction detected in the first driving cycle is stored in TCM memory (in the form of pending DTC and freeze frame data) but the malfunction indicator lamp (MIL) does not light at this time. It lights up at the second detection of same malfunction also in the next driving cycle.

Pending DTC

Pending DTC means a DTC detected and stored temporarily at 1 driving cycle of the DTC which is detected in the 2 driving cycle detection logic.

Precaution in Diagnosing Trouble

- Don't disconnect couplers from TCM, battery cable from battery, TCM ground wire harness from engine or main fuse before checking the diagnosis information stored in TCM memory.
  Such disconnection will clear memorized information in TCM memory.
- Using scan tool the diagnostic information stored in TCM memory can be checked and cleared as well. Before its use, be sure to read Operator's (instruction) Manual supplied with it carefully to have good understanding of its functions and usage.
- Be sure to read "Precautions for Electrical Circuit Service" in Section 0A before inspection and observe what is written there.
- TCM and/or ECM replacement
  – When substituting a known-good TCM and/or ECM, check that all relays and actuators have resistance of specified value.
    Neglecting this check may result in damage to good TCM and/or ECM.
- Communication of ECUs, ECM and TCM, is established by CAN (Computer Area Network).
  Therefore, handle CAN communication line with care referring to "Precautions" described in Section 0A.

Automatic Transaxle Diagnostic Flow Table

Refer to the following items for the details of each step.

Step	Action	Yes	No
1	Customer Complaint Analysis 1) Perform customer complaint analysis. Was customer complaint analysis performed according to instruction?	Go to Step 2.	Perform customer complaint analysis.
2	Diagnostic Trouble Code (DTC)/Freeze Frame Data Check, Record and Clearance 1) Check for DTC referring to the followings. Is there any DTC(s)?	1) Print DTC or write them down and clear them by referring to "Diagnostic Trouble Code (DTC) Clearance" in this section. 2) Go to Step 3.	Go to Step 4.
3	Visual Inspection 1) Perform visual inspection referring to the followings. Is there any faulty condition?	1) Repair or replace malfunction part. 2) Go to Step 11.	Go to Step 5.
4	Visual Inspection 1) Perform visual inspection referring to the followings. Is there any faulty condition?	1) Repair or replace malfunction part. 2) Go to Step 11.	Go to Step 8.
5	Trouble Symptom Confirmation 1) Confirm trouble symptom referring to the followings. Is trouble symptom identified?	Go to Step 6.	Go to Step 7.
6	Rechecking and Recording of DTC 1) Recheck for DTC referring to "Diagnostic Trouble Code (DTC) Check" in this section. Is there any DTC(s)?	Go to Step 9.	Go to Step 8.
7	Rechecking and Recording of DTC/Freeze Frame Data 1) Recheck for DTC referring to "Diagnostic Trouble Code (DTC) Check" in this section. Is there any DTC(s)?	Go to Step 9.	Go to Step 10.
8	Automatic Transaxle Basic Inspection and Trouble Diagnosis Table 1) Check and repair according to "Automatic Transaxle Basic Check" and "Trouble Diagnosis Table" in this section. Are check and repair complete?	Go to Step 11.	1) Check and repair malfunction part(s). 2) Go to Step 11.
9	Troubleshooting for DTC 1) Check and repair according to applicable DTC Flow Table. Are check and repair complete?	Go to Step 11.	1) Check and repair malfunction part(s). 2) Go to Step 11.
10	Check for Intermittent Problems 1) Check for intermittent problems referring to the followings. Is there any faulty condition?	1) Repair or replace malfunction part(s). 2) Go to Step 11.	Go to Step 11.

Step	Action	Yes	No
11	Final Confirmation Test 1) Clear DTC if any. 2) Perform final confirmation test referring to the followings. Is there any problem symptom, DTC or abnormal condition?	Go to Step 6.	End.

1. Customer Complaint Analysis (See Customer Problem Inspection Form (Example))
Record details of the problem (failure, complaint) and how it occurred as described by the customer.
For this purpose, use of such an inspection form will facilitate collecting information to the point required for proper analysis and diagnosis.

2. Diagnostic Trouble Code (DTC)/Freeze Frame Data Check, Record and Clearance
First, check DTC (including pending DTC) referring to "Diagnostic Trouble Code (DTC) Check" in this section. If DTC exists, print or write down DTC/Freeze frame data and then clear malfunction DTC(s) by referring to "Diagnostic Trouble Code (DTC) Clearance" in this section. Malfunction DTC indicates malfunction in the system but it is not possible to know from it whether the malfunction is occurring now or it occurred in the past and normal condition has been restored. In order to know that, check symptom in question according to Step 5 and then recheck DTC according to Step 6.
Diagnosing a trouble based on the DTC in this step only or failure to clear the DTC in this step may result in an faulty diagnosis, trouble diagnosis of a normal circuit or difficulty in troubleshooting which is otherwise unnecessary.

3 and 4. Visual Inspection
As a preliminary step, be sure to perform visual check of the items that support proper function of the engine and automatic transaxle referring to "Visual Inspection" in this section.

5. Trouble Symptom Confirmation
Check trouble symptoms based on information obtained in Step 1 Customer Complaint Analysis and Step 2 DTC Check.
Also, reconfirm DTC according to "DTC Confirmation Procedure" described in each DTC Flow Table.

6 and 7. Rechecking and Record of DTC/Freeze Frame Data
Refer to "Diagnostic Trouble Code (DTC) Check" in this section for checking procedure.

8. Automatic Transmission Basic Check and Trouble Diagnosis Table
Perform basic check of A/T according to flow table of "Automatic Transaxle Basic Check" first. When the end of the flow table has been reached, check the parts of the system suspected as a possible cause referring to "Trouble Diagnosis Table" and based on symptoms appearing on the vehicle (symptoms obtained through steps of customer complaint analysis, trouble symptom confirmation and/or A/T basic check) and repair or replace faulty parts, if any.

9. Diagnostic Trouble Code Flow Table (See each DTC Flow Table)
Based on the DTC indicated in Step 6/7 and referring to Diagnostic Trouble Code (DTC) Table in this section, locate the cause of the trouble, namely in a sensor, switch, wire harness, connector, actuator, TCM or other part and repair or replace faulty parts.

10. Check for Intermittent Problem
Check parts where an intermittent trouble is easy to occur (e.g. wire harness, connector, etc.), referring to "Intermittent and Poor Connection" in Section 0A and related circuit of DTC recorded in Step 2.

11. Final Confirmation Test

Confirm that the problem symptom has gone and the vehicle is free from any abnormal conditions. If what has been repaired is related to the malfunction DTC, clear the DTC once and check to ensure that no malfunction DTC is indicated.

Customer Problem Inspection Form (Example)

User name:	Model:	VIN:	
Date of issue:	Date of Reg.:	Date of problem:	Mileage:

PROBLEM SYMPTOMS
☐ Vehicle does not move (R, D, 2, L or any range)
☐ No upshift automatically (☐ 1st to 2nd ☐ 2nd to 3rd ☐ 3rd to 4th (O/D) ☐ 2 range ☐ D range)
☐ No downshift automatically (☐ 3rd to 2nd ☐ 2nd to 1st ☐ 4th (O/D) to 3rd ☐ 2 range ☐ D range)
☐ No gear change manually (☐ 1st ↔ 3rd ☐ 3rd ↔ 4th)
☐ TCC no lock-up ☐ TCC no lock-up off
☐ Automatic shift point too high or too low
☐ Excessive gear change shock (1st/2nd/3rd/4th (O/D)/Reverse)
☐ No kickdown
☐ Transmission slipping in (1st/2nd/3rd/4th (O/D)/Reverse)
☐ Others_____

VEHICLE/ENVIRONMENTAL CONDITION WHEN PROBLEM OCCURS	
Environmental Condition	
Weather	☐ Fair ☐ Cloudy ☐ Rain ☐ Always ☐ Other_____
Temperature	(°F/ °C) ☐ Hot ☐ Warm ☐ Cool ☐ Cold ☐ always
Frequency	☐ Always ☐ Sometimes (times/ day, month) ☐ Only once ☐ Under certain condition
Road	☐ Urban ☐ Suburb ☐ Highway ☐ Mountainous ☐ Uphill ☐ Downhill ☐ Tarmacadam ☐ Gravel ☐ Other_____
Vehicle Condition	
Engine & transmission condition	☐ Cold/ ☐ Warming up phase/ ☐ Warmed up Engine speed (r/min.) Throttle opening (☐ Idle/ ☐ About % ☐ full) O/D cut switch (☐ ON/ ☐ OFF)
Vehicle condition	☐ At stop/ ☐ During driving (☐ Constant speed ☐ Accelerating ☐ Decelerating ☐ Braking) ☐ Right hand corner ☐ Left hand corner ☐ Vehicle speed (km/h mile/h) ☐ Other_____

"O/D OFF" lamp	☐ Blink ☐ Always ON ☐ Sometimes ON ☐ Always OFF ☐ Good condition
Malfunction indicator lamp	☐ Blink ☐ Always ON ☐ Sometimes ON ☐ Always OFF ☐ Good condition
Diagnostic trouble code	First check: ☐ No code ☐ Malfunction code ( )
	Second check: ☐ No code ☐ Malfunction code ( )

NOTE:

The above form is a standard sample. It should be modified according to conditions characteristic of each market.

“O/D OFF” Lamp Check

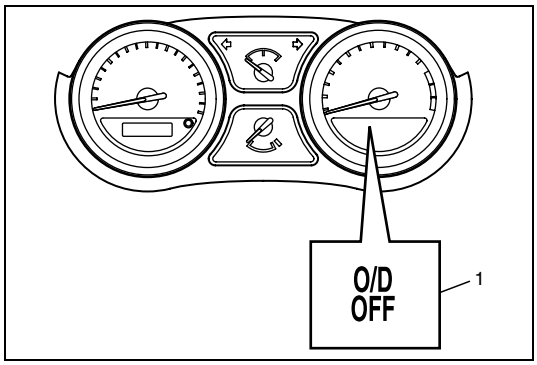

1) Turn ignition switch ON.
2) Check that “O/D OFF” lamp (1) lights for about 2 sec. and then goes OFF.
   If anything faulty is found, advance to “Diagnostic Flow Table A-3” or “Diagnostic Flow Table A-4”.

Malfunction Indicator Lamp (MIL) Check

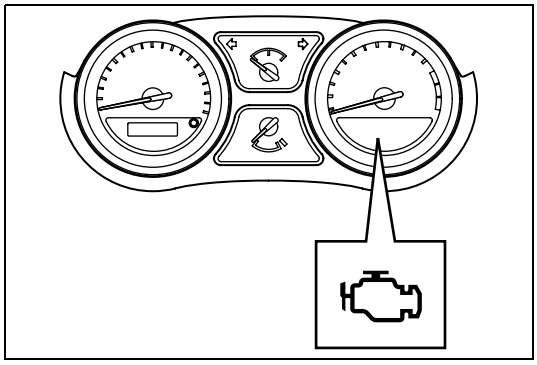

Refer to the same item in Section 6 for checking procedure.

Diagnostic Trouble Code (DTC) Check

1) Turn ignition switch to OFF position.

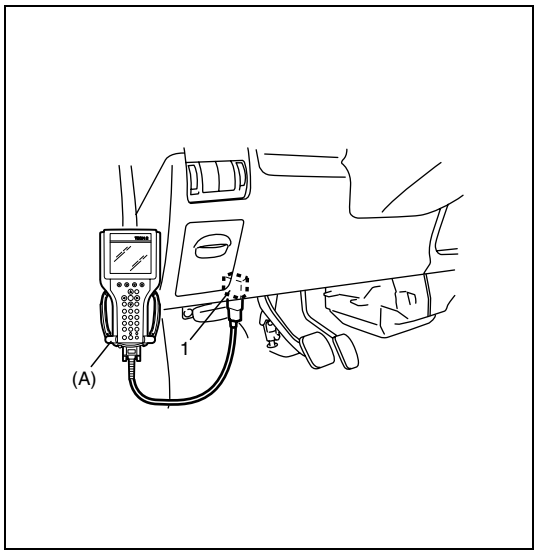

2) Connect scan tool to data link connector (DLC) (1).

Special tool
(A): SUZUKI scan tool

3) Turn ignition switch ON.
4) Read DTC, pending DTC and freeze frame data according to instructions displayed on scan tool and print it down. Refer to scan tool operator's manual for further details.

NOTE:

If SUZUKI scan tool cannot communicate TCM, perform "Serial Data Circuit Check" described in this section.

5) After completing the check, turn ignition switch OFF and disconnect scan tool from data link connector (DLC) (1).

Diagnostic Trouble Code (DTC) Clearance

WARNING:

When performing a driving test, select a safe place where there is neither any traffic nor any traffic accident possibility and be very careful during testing to avoid occurrence of a n accident.

After repair or replace malfunction part(s), clear all DTCs by performing the following procedure.

1) Connect SUZUKI scan tool to data link connector in the same manner as when making this connection for DTC check.
2) Turn ignition switch ON.
3) Erase DTC and pending DTC according to instructions displayed on scan tool. Refer to scan tool operator's manual for further details.
4) After completing the clearance, turn ignition switch off and disconnect scan tool from data link connector.

NOTE:

DTC and freeze frame data stored in TCM memory are also cleared in following cases. Be careful not to clear them before keeping their record.

- **When power to TCM is cut off (by disconnecting battery cable, removing fuse or disconnecting TCM connectors).**
- **When the same malfunction (DTC) is not detected again during 40 engine warm-up cycles.**

Diagnostic Trouble Code (DTC) Table

DTC No.	Detecting item	Detecting condition (DTC will set when detecting)	Driving cycle when MIL lighted
P0705	Transmission Range Sensor Circuit Malfunction (PRNDL Input)	Multiple signals are inputted simultaneously.	1driving cycle
P0707	Transmission Range Sensor Circuit Low	No sensor signal is inputted.	2 driving cycles
P0712	Transmission Fluid Temperature Sensor “A” Circuit Low	Sensor output voltage is too low.	1driving cycle
P0713	Transmission Fluid Temperature Sensor “A” Circuit High	Sensor output voltage is too high.	1driving cycle
P0717	Input/Turbine Speed Sensor Circuit No Signal	No sensor signal is detected although output speed sensor signal is inputted.	1driving cycle
P0722	Output Speed Sensor Circuit No Signal	No sensor signal is inputted although input speed sensor signal is inputted.	1driving cycle
P0741	Torque Converter Clutch Circuit Performance or Stuck Off	Difference in revolution between engine and input shaft is too large although TCM is commanding TCC solenoid to turn ON.	2 driving cycles
P0742	Torque Converter Clutch Circuit Stuck On	Difference in revolution between engine and input shaft is too small although TCM is commanding TCC solenoid to turn OFF.	2 driving cycles
P0751	Shift Solenoid “A” Performance or Stuck Off	Actual gear position is 3rd gear although TCM command is for 2nd gear.	2 driving cycles
P0752	Shift Solenoid “A” Stuck On	Actual gear position is 2nd gear although TCM command is for 3rd gear.	2 driving cycles
P0756	Shift Solenoid “B” Performance or Stuck Off	Actual gear position is 3rd gear although TCM command is for 4th gear.	2 driving cycles
P0757	Shift Solenoid “B” Stuck On	Actual gear position is 4th gear although TCM command is for 3rd gear.	2 driving cycles
P0785	Shift/Timing Solenoid	Voltage of timing solenoid terminal is high although TCM is commanding timing solenoid to turn OFF. or Voltage of timing solenoid terminal is low although TCM is commanding timing solenoid to turn ON.	1driving cycle
P0962	Pressure Control Solenoid “A” Control Circuit Low	No electric flow is detected on pressure control solenoid circuit.	1driving cycle
P0963	Pressure Control Solenoid “A” Control Circuit High	Too much electric flow is detected on pressure control solenoid circuit.	1driving cycle
P0973	Shift Solenoid “A” Control Circuit Low	Voltage of shift solenoid terminal is low although TCM is commanding shift solenoid to turn ON.	1driving cycle
P0974	Shift Solenoid “A” Control Circuit High	Voltage of shift solenoid terminal is high although TCM is commanding shift solenoid to turn OFF.	1driving cycle
P0976	Shift Solenoid “B” Control Circuit Low	Voltage of shift solenoid terminal is low although TCM is commanding shift solenoid to turn ON.	1driving cycle

DTC No.	Detecting item	Detecting condition (DTC will set when detecting)	Driving cycle when MIL lighted
P0977	Shift Solenoid “B” Control Circuit High	Voltage of shift solenoid terminal is high although TCM is commanding shift solenoid to turn OFF.	1driving cycle
P1701	CAN Communication Problem - TCM	No signal inputted from ECM to TCM for specified time continuously.	1driving cycle
P1702	Internal Control Module Memory Check Sum Error	Calculation of current data stored in TCM is not correct comparing with pre-stored checking data in TCM.	1driving cycle
P1703	CAN Invalid Data- TCM	TCM receives malfunction signal of throttle position, engine coolant temperature, engine revolution and engine torque from ECM.	*1
P2769	Torque Converter Clutch Circuit Low	No electric flow is detected on TCC solenoid circuit.	1 driving cycle
P2770	Torque Converter Clutch Circuit High	Too much electric flow is detected on TCC solenoid circuit.	1 driving cycle

NOTE:

***1: TCM does not desire turning on malfunction indicator lamp to ECM but DTC is stored in TCM memory.**

Fail Safe Table

This function is provided by the safe mechanism that assures safe driveability even when the solenoid valve, sensor or its circuit fails.
The table below shows the fail safe function for each fail condition of solenoid, solenoid or its circuit.

DTC No.	Trouble Area	Fail Safe Operation
P0705	Transmission Range Sensor Circuit Malfunction (PRNDL Input)	• Selected range is set in priority order shown below. D>2>L>R>N>P • Lock-up function is inhibited to operate. • Learning control is inhibited.
P0707	Transmission Range Sensor Circuit Low	• Selected range is assumed to be “D” range. • Lock-up function is inhibited to operate. • Learning control is inhibited.
P0712 P0713	Transmission Fluid Temperature Sensor “A” Circuit Low	• A/T fluid temperature is assumed to be 200°C (392°F). • Upshifting to O/D is inhibited. • Lock-up function is inhibited to operate. • Garage shift control is inhibited. • Learning control is inhibited.
P0717	Input/Turbine Speed Sensor Circuit No Signal	• Upshifting to O/D is inhibited. • Lock-up function is inhibited to operate. • Line pressure control at gear shifting is inhibited. • Torque reducing request to ECM (torque reduction control) is inhibited. • Garage shift control is inhibited. • Learning control is inhibited.
P0722	Output Speed Sensor Circuit No Signal	• Vehicle speed which is calculated by input shaft speed sensor signal is used for gear shifting control instead of vehicle speed calculated by output shaft speed sensor (VSS) signal. • Upshifting to O/D is inhibited. • Lock-up function is inhibited to operate. • Line pressure control at gear shifting is inhibited. • Torque reducing request to ECM (torque reduction control) is inhibited. • Garage shift control is inhibited. • Learning control is inhibited.
P0785	Shift/Timing Solenoid	• Power supply for all solenoid valves is cut. • Gear position is fixed in 3rd gear. • Line pressure control at gear shifting is inhibited. • Look-up function is inhibited to operate.
P0962	Pressure Control Solenoid “A” Control Circuit Low	
P0963	Pressure Control Solenoid “A” Control Circuit High	
P0973	Shift Solenoid “A” Control Circuit Low	
P0974	Shift Solenoid “A” Control Circuit High	
P0976	Shift Solenoid “B” Control Circuit Low	
P0977	Shift Solenoid “B” Control Circuit High	

DTC No.	Trouble Area	Fail Safe Operation
P1701	CAN Communication Problem - TCM	• Throttle opening used for line pressure control is assumed to be 100%. • Throttle opening used for gear shifting control is assumed to be 0%. • After 15 minutes pass from detecting malfunction, engine coolant temperature is assumed to be 90°C (194°F). • Upshifting to O/D is inhibited. • Lock-up function is inhibited to operate. • Line pressure control at gear shifting is inhibited. • Torque reducing request to ECM (torque reduction control) is inhibited. • Learning control is inhibited. • Garage shift control is inhibited.
P1702	Internal Control Module Memory Check Sum Error	• Power supply for all solenoid valves is cut. • Gear position is fixed in 3rd gear. • Line pressure control at gear shifting is inhibited. • Lock-up function is inhibited to operate.
P1703	CAN Invalid Data- TCM	In case of throttle position signal malfunction: • Throttle opening used for line pressure control is assumed to be 100%. • Throttle opening used for gear shifting control is assumed to be 0%. • Upshifting to O/D is inhibited. • Lock-up function is inhibited to operate. • Garage shift control is inhibited. • Learning control is inhibited. In case of engine coolant temperature signal malfunction: • After 15 minutes pass from detecting malfunction, engine coolant temperature is assumed to be normal operating temperature, and controls of overdrive and lock-up is released from inhibition. In case of engine revolution signal malfunction: • Upshifting to O/D is inhibited. • Lock-up function is inhibited to operate. • Line pressure control at gear shifting is inhibited. • Torque reducing request to ECM (torque reduction control) is inhibited. • Garage shift control is inhibited. • Learning control is inhibited.
P2769	Torque Converter Clutch Circuit Low	• Lock-up function is inhibited to operate.
P2770	Torque Converter Clutch Circuit High	• Lock-up function is inhibited to operate. • Vehicle speed is slower than 15 km/h (9 mile/h), gear position is fixed in 1st gear for prevention of engine stall.

Visual Inspection

Visually check the following parts and systems.

INSPECTION ITEM	REFERRING SECTION
• A/T fluid ----- level, leakage, color	Section 0B
• A/T fluid hoses ----- disconnection, looseness, deterioration	Section 7B
• Throttle cable ----- play (under warm engine), installation	Section 6E1
• A/T select cable ----- installation	Section 7B
• Engine oil ----- level, leakage	Section 0B
• Engine coolant ----- level, leakage	Section 0B
• Engine mountings ----- play, looseness, damage	Section 6A1
• Suspension ----- play, looseness	Section 3
• Drive shafts ----- damage	Section 4A
• Battery ----- indicator condition, corrosion of terminal	
• Connectors of electric wire harness ----- disconnection, friction	Section 6E1
• Fuses ----- burning	Section 8
• Parts ----- installation, damage	
• Bolts ----- looseness	
• Other parts that can be checked visually	
Also check the following items at engine start, if possible.	
• “O/D OFF” lamp ----- Operation	
• Malfunction indicator lamp ----- Operation	Section 6E1
• Charge warning lamp ----- Operation	Section 6H
• Engine oil pressure warning lamp ----- Operation	Section 8 (Section 6A1 for pressure check)
• Engine coolant temp. meter ----- Operation	
• Other parts that can be checked visually	

Automatic Transaxle Basic Check

This check is important for troubleshooting when TCM has detected no DTC and no abnormality has been noted in visual inspection. Follow the flow table carefully.

Step	Action	Yes	No
1	Was “Automatic Transaxle Diagnostic Flow Table” preformed?	Go to Step 2.	Go to “Automatic Transaxle Diagnostic Flow Table”.
2	Perform “Road Test” in this section. Is it OK?	Go to Step 3.	Proceed to “Troubleshooting” in “Road Test”.
3	Perform “Manual Road Test” in this section. Is it OK?	Go to Step 4.	Proceed to “Troubleshooting” in “Manual Road Test”.
4	Perform “Engine Brake Test” in this section. Is it OK?	Go to Step 5.	Proceed to “Troubleshooting” in “Engine Brake Test”.
5	Perform “Stall Test” in this section. Is it OK?	Go to Step 6.	Proceed to “Troubleshooting” in “Stall Test”.
6	Perform “Time Lag Test” in this section. Is it OK?	Go to Step 7.	Proceed to “Troubleshooting” in “Time Lag Test”.
7	Perform “Line Pressure Test” in this section. Is it OK?	Go to Step 8.	Proceed to “Troubleshooting” in “Line Pressure Test”.
8	Proceed to “Trouble diagnosis table-1” in this section. Is trouble identified?	Repair or replace faulty parts.	Go to Step 9.
9	Proceed to “Trouble diagnosis table-2” in this section. Is trouble identified?	Repair or replace faulty parts.	Proceed to “Trouble diagnosis table-3” in this section.

Trouble Diagnosis Table

Trouble diagnosis table-1

Electrical Repair

Condition	Possible Cause	Correction
Excessive shift shock	Shift solenoid valve-A and/or-B circuit faulty	Inspect circuit for open, short and intermittent. If NG, repair.
	Pressure control solenoid valve circuit faulty	
	(Only when N→D or 3↔O/D shifting) Timing solenoid valve circuit faulty	
	Output shaft speed sensor (VSS) circuit faulty	
	Input shaft speed sensor circuit faulty	
	Transmission fluid temperature sensor circuit faulty	
	CAN communication circuit faulty	
	Throttle position sensor circuit faulty	Inspect circuit for open, short and intermittent referring to Section 6. If NG, repair.
	Crank position sensor circuit faulty	
	TCM	Substitute a known-good TCM and recheck.
	ECM	Substitute a known-good ECM and recheck.
No gear shift as 3rd gear	Shift solenoid valve-A and/or-B circuit faulty	Inspect circuit for open, short and intermittent. If NG, repair.
	Pressure control solenoid valve circuit faulty	
	Timing solenoid valve circuit faulty	
	TCM	Substitute a known-good TCM and recheck.
Poor 1→2 shift	Shift solenoid valve-B circuit faulty	Inspect circuit for open, short and intermittent. If NG, repair.
	Output shaft speed sensor (VSS) circuit faulty	
	Transmission range sensor circuit faulty	
	CAN communication circuit faulty	
	Throttle position sensor circuit faulty	Inspect circuit for open, short and intermittent referring to Section 6. If NG, repair.
	TCM	Substitute a known-good TCM and recheck.
	ECM	Substitute a known-good ECM and recheck.
Poor 2→3 shift	Shift solenoid valve-A circuit faulty	Inspect circuit for open, short and intermittent. If NG, repair.
	Output shaft speed sensor (VSS) circuit faulty	
	Transmission range sensor circuit faulty	
	CAN communication circuit faulty	
	Throttle position sensor circuit faulty	Inspect circuit for open, short and intermittent referring to Section 6. If NG, repair.
	TCM	Substitute a known-good TCM and recheck.
	ECM	Substitute a known-good ECM and recheck.

Condition	Possible Cause	Correction
Poor 3→O/D shift	Shift solenoid valve-B circuit faulty	Inspect circuit for open, short and intermittent. If NG, repair.
	Pressure control solenoid valve circuit faulty	
	Timing solenoid valve circuit faulty	
	Output shaft speed sensor (VSS) circuit faulty	
	Input shaft speed sensor circuit faulty	
	Transmission range sensor circuit faulty	
	Transmission fluid temperature sensor circuit faulty	
	CAN communication circuit faulty	
	Throttle position sensor circuit faulty	Inspect circuit for open, short and intermittent referring to Section 6. If NG, repair.
	Engine coolant temperature sensor circuit faulty	
	Crank position sensor circuit faulty	
	O/D off switch circuit faulty	Refer to “Diagnostic Flow Table A-1: No Gear Shift to O/D” in this section.
	TCM	Substitute a known-good TCM and recheck.
	ECM	Substitute a known-good ECM and recheck.
Poor O/D→3 shift	Shift solenoid valve-B circuit faulty	Inspect circuit for open, short and intermittent. If NG, repair.
	Pressure control solenoid valve circuit faulty	
	Timing solenoid valve circuit faulty	
	Output shaft speed sensor (VSS) circuit faulty	
	Input shaft speed sensor circuit faulty	
	CAN communication circuit faulty	
	Throttle position sensor circuit faulty	Inspect circuit for open, short and intermittent referring to Section 6. If NG, repair.
	O/D off switch circuit faulty	Refer to “Fig.” in this section.
	TCM	Substitute a known-good TCM and recheck.
	ECM	Substitute a known-good ECM and recheck.
Poor 3→2 shift	Shift solenoid valve-A circuit faulty	Inspect circuit for open, short and intermittent. If NG, repair.
	Output shaft speed sensor (VSS) circuit faulty	
	CAN communication circuit faulty	
	Throttle position sensor circuit faulty	Inspect circuit for open, short and intermittent referring to Section 6. If NG, repair.
	TCM	Substitute a known-good TCM and recheck.
	ECM	Substitute a known-good ECM and recheck.
Poor 2→1 shift	Shift solenoid valve-B circuit faulty	Inspect circuit for open, short and intermittent. If NG, repair.
	Output shaft speed sensor (VSS) circuit faulty	
	CAN communication circuit faulty	
	Throttle position sensor circuit faulty	Inspect circuit for open, short and intermittent referring to Section 6. If NG, repair.
	TCM	Substitute a known-good TCM and recheck.
	ECM	Substitute a known-good ECM and recheck.

Condition	Possible Cause	Correction
Incorrect gear shift point	Output shaft speed sensor (VSS) circuit faulty	Inspect circuit for open, short and intermittent. If NG, repair.
	Pressure control solenoid valve circuit faulty	
	CAN communication circuit faulty	
	Pressure control solenoid valve circuit faulty	
	Throttle position sensor circuit faulty	Inspect circuit for open, short and intermittent referring to Section 6. If NG, repair.
	TCM	Substitute a known-good TCM and recheck.
	ECM	Substitute a known-good ECM and recheck.
Non operate TCC (lock-up) system	TCC solenoid valve-B circuit faulty	Inspect circuit for open, short and intermittent. If NG, repair.
	Shift solenoid valve-A and/or-B circuit faulty	
	Pressure control solenoid valve circuit faulty	
	Output shaft speed sensor (VSS) circuit faulty	
	Input shaft speed sensor circuit faulty	
	Transmission range sensor circuit faulty	
	Transmission fluid temperature sensor circuit faulty	
	CAN communication circuit faulty	
	Brake light switch circuit faulty	Refer to “Diagnostic Flow Table A-2: No Lock-Up Occurs” in this section.
	Throttle position sensor circuit faulty	Inspect circuit for open, short and intermittent referring to Section 6. If NG, repair.
	Engine coolant temperature sensor circuit faulty	
	TCM	Substitute a known-good TCM and recheck.
	ECM	Substitute a known-good ECM and recheck.
Higher or lower stall speed	Pressure control solenoid valve circuit faulty	Inspect circuit for open, short and intermittent. If NG, repair.
	TCM	Substitute a known-good TCM and recheck.
Excessive “N”→“D” or “N”→“R” time lag	Pressure control solenoid valve circuit faulty	Inspect circuit for open, short and intermittent. if NG, repair
	Transmission fluid temperature sensor circuit faulty	
	TCM	Substitute a known-good TCM and recheck.
Higher or lower line pressure	Pressure control solenoid valve circuit faulty	Inspect circuit for open, short and intermittent. If NG, repair.
	TCM	Substitute a known-good TCM and recheck.

Trouble diagnosis table-2

On-vehicle Repair

Condition	Possible Cause	Correction
Unable to run in all range	Faulty valve body component	Replace valve body assembly
Excessive shift shock	Engine abnormal condition	Inspect and repair engine
	Malfunction of shift solenoid valve-A and/or-B	Inspect. If NG, replace
	Malfunction of output shaft speed sensor (VSS)	
	Malfunction of input shaft speed sensor	
	Malfunction of transmission range sensor	
	Malfunction of Transmission fluid temperature sensor	
	(Only when N→D or 3↔O/D shifting) Malfunction of timing solenoid valve	
	Malfunction of pressure control solenoid valve	Inspect. If NG, replace valve body assembly.
	(Except N→D or N→R shifting) Malfunction of brake light switch	Inspect referring to Section 5. If NG, replace.
	Malfunction of crank position sensor	Inspect referring to Section 6E1. If NG, replace.
	Malfunction of throttle position sensor	
	Faulty valve body component	Replace valve body assembly.
Poor 1→2 shift	Malfunction of shift solenoid valve-B	Inspect. If NG, replace.
	Malfunction of output shaft speed sensor (VSS)	
	Malfunction of transmission range sensor	
	Malfunction of throttle position sensor	Inspect referring to Section 6E1. If NG, replace.
	Faulty valve body component	Replace valve body assembly.
Poor 2→3 shift	Malfunction of shift solenoid valve-A	Inspect. If NG, replace.
	Malfunction of output shaft speed sensor (VSS)	
	Malfunction of transmission range sensor	
	Malfunction of throttle position sensor	Inspect referring to Section 6E1. If NG, replace.
	Faulty valve body component	Replace valve body assembly.
Poor 3→O/D shift	Malfunction of shift solenoid valve-B	Inspect. If NG, replace.
	Malfunction of timing solenoid valve	
	Malfunction of output shaft speed sensor (VSS)	
	Malfunction of input shaft speed sensor	
	Malfunction of transmission range sensor	
	Malfunction of Transmission fluid temperature sensor	
	Malfunction of O/D off switch	
	Malfunction of engine coolant temperature sensor	Inspect referring to Section 6E1. If NG, replace.
	Malfunction of throttle position sensor	
	Malfunction of pressure control solenoid valve	Inspect. If NG, replace valve body assembly.
	Faulty valve body component	Replace valve body assembly.

Condition	Possible Cause	Correction
Poor O/D→3 shift	Malfunction of shift solenoid valve-B	Inspect. If NG, replace.
	Malfunction of timing solenoid valve	
	Malfunction of output shaft speed sensor (VSS)	
	Malfunction of input shaft speed sensor	
	Malfunction of O/D off switch	
	Malfunction of throttle position sensor	Inspect referring to Section 6E1. If NG, replace.
	Malfunction of pressure control solenoid valve	Inspect. If NG, replace valve body assembly.
	Faulty valve body component	Replace valve body assembly.
Poor 3→2 shift	Malfunction of shift solenoid valve-A	Inspect. If NG, replace.
	Malfunction of output shaft speed sensor (VSS)	
	Malfunction of throttle position sensor	Inspect referring to Section 6E1. If NG, replace.
	Faulty valve body component	Replace valve body assembly.
Poor 2→1 shift	Malfunction of shift solenoid valve-B	Inspect. If NG, replace.
	Malfunction of output shaft speed sensor (VSS)	
	Malfunction of throttle position sensor	Inspect referring to Section 6E1. If NG, replace.
	Faulty valve body component	Replace valve body assembly.
Incorrect shift point	Engine abnormal condition	Inspect and repair engine
	Malfunction of output shaft speed sensor (VSS)	Inspect. If NG, replace.
	Malfunction of throttle position sensor	Inspect referring to Section 6E1. If NG, replace.
Non operate TCC (lock-up) system	Malfunction of TCC solenoid valve	Inspect. If NG, replace.
	Malfunction of shaft solenoid valve-A and/or-B	
	Malfunction of output shaft speed sensor (VSS)	
	Malfunction of input shaft speed sensor	
	Malfunction of transmission range sensor	
	Malfunction of transmission fluid temperature sensor	
	Malfunction of pressure control solenoid valve	Inspect. If NG, replace valve body assembly.
	Malfunction of brake light switch	Inspect referring to Section 5. If NG, replace.
	Malfunction of throttle position sensor	Inspect referring to Section 6E1. If NG, replace.
	Malfunction of engine coolant temperature sensor	
	Faulty valve body component	Replace valve body assembly.
Excessive “N”→“D” or “N”→“R” time lag	Malfunction of transmission fluid temperature sensor	Inspect. If NG, replace.
	Pressure control solenoid valve circuit faulty	Inspect. If NG, replace valve body assembly.
	Clogged oil strainer	Replace.
	Faulty valve body component	Replace valve body assembly.

Trouble diagnosis table-3

Off-vehicle Repair

Condition	Possible Cause	Correction
Unable to run in all range	Faulty oil pump	Inspect. If NG, replace.
	Seized or broken planetary gear	
	Faulty one-way No.2 clutch	
	Damaged drive plate	
	Faulty forward clutch	
	Faulty reverse clutch	
	Faulty 1st and reverse brake	
	Faulty torque converter	Replace
Excessive “N”→“D” shift shock	Faulty forward clutch	Inspect. If NG, replace.
Excessive “N”→“R” shift shock	Faulty reverse clutch	Inspect. If NG, replace.
	Faulty 1st and reverse brake	
Poor 1→2 shift, excessive shock or slippage	Faulty 2nd brake	Inspect. If NG, replace.
	Faulty one-way No.1 clutch	
Poor 2→3 shift, excessive shock or slippage	Faulty direct clutch	Inspect. If NG, replace.
Poor 3↔O/D shift, excessive shock or slippage	Faulty forward clutch	Inspect. If NG, replace.
	Faulty O/D and 2nd coast brake	
Poor 3→2 shift, excessive shock or slippage	Faulty direct clutch	Inspect. If NG, replace.
	Faulty one-way No.1 clutch	
Poor 2→1 shift, excessive shock or slippage	Faulty 2nd brake	Inspect. If NG, replace.
	Faulty one-way No.2 clutch	
Non operate TCC (lock-up) system	Faulty torque converter	Replace.
Excessive “N”→“D” time lag	Faulty oil pump	Inspect. If NG, replace.
	Faulty forward clutch	
	Faulty one-way No.2 clutch	
	Leakage from “D” range fluid pressure circuit	Overhaul or replace valve body assembly.
Excessive “N”→“R” time lag	Faulty oil pump	Inspect. If NG, replace.
	Faulty reverse clutch	
	Faulty 1st and reverse brake	
	Leakage from “R” range fluid pressure circuit	Overhaul or replace valve body assembly.
Poor engine brake in downshift to “2” range	Faulty O/D and 2nd coast brake	Inspect. If NG, replace.
Poor engine brake in downshift to “L” range	Faulty 1st and reverse brake.	Inspect. If NG, replace.

Road Test

This test is to check if upshift, downshift and lock-up take place at specified speeds while actually driving vehicle on a level road.

WARNING:
- **Carry out test in very little traffic area to prevent an accident.**
- **Test requires 2 persons, a driver and a tester.**

1) Warm up engine.
2) With engine running at idle, shift selector lever to “D” range.
3) Accelerate vehicle speed by depressing accelerator pedal gradually.
4) While driving in “D” range, check if gear shift and lock-up occur properly as shown in “Gear Shift Diagram [A] and TCC Lock-up Diagram [B]”. (Refer to “Automatic gear shift diagram” in this section.)

Troubleshooting

Condition	Possible Cause	Correction
Unable to run in all range	Faulty valve body component	Replace valve body assembly
	Faulty oil pump	Inspect. If NG, replace.
	Seized or broken planetary gear	
	Faulty one-way No.2 clutch	
	Faulty forward clutch	
	Faulty reverse clutch	
	Faulty 1st and reverse brake	
	Damaged drive plate	
	Faulty torque converter	Replace.
No gear shift as 3rd gear	Malfunction of shift solenoid valve-A and/or-B	Inspect. If NG, replace.
	Malfunction of timing solenoid valve	
	Malfunction of pressure control solenoid valve	Inspect. If NG, replace valve body assembly.
1→2 upshift fails to occur	Malfunction of shift solenoid valve-B	Inspect. If NG, replace.
	Malfunction of output shaft speed sensor (VSS)	
	Malfunction of throttle position sensor	
	Malfunction of transmission range sensor	
	Faulty valve body component	Replace valve body assembly
	Faulty 2nd brake	Inspect. If NG, replace.
	Faulty one-way No.1 clutch	
2→3 upshift fails to occur	Malfunction of shift solenoid valve-A	Inspect. If NG, replace.
	Malfunction of output shaft speed sensor (VSS)	
	Malfunction of throttle position sensor	
	Malfunction of transmission range sensor	
	Faulty valve body component	Replace valve body assembly.
	Faulty direct clutch	Inspect. If NG, replace.

Condition	Possible Cause	Correction
3→O/D upshift fails to occur	Malfunction of shift solenoid valve-B	Inspect. If NG, replace.
	Malfunction of O/D off switch	
	Malfunction of engine coolant temperature sensor	
	Malfunction of output shaft speed sensor (VSS)	
	Malfunction of input shaft speed sensor	
	Malfunction of throttle position sensor	
	Malfunction of transmission range sensor	
	Malfunction of crankshaft position sensor	
	Malfunction of timing solenoid valve	
	Malfunction of transmission fluid temperature sensor	
	Malfunction of pressure control solenoid valve	Inspect. If NG, replace valve body assembly.
	Faulty valve body component	Replace valve body assembly.
	Faulty O/D and 2nd coast brake	Inspect. If NG, replace.
O/D→3 downshift fails to occur	Malfunction of shift solenoid valve-A	Inspect. If NG, replace.
	Malfunction of O/D off switch	
	Malfunction of output shaft speed sensor (VSS)	
	Malfunction of input shaft speed sensor	
	Malfunction of throttle position sensor	
	Malfunction of timing solenoid valve	
	Malfunction of pressure control solenoid valve	Inspect. If NG, replace valve body assembly.
	Faulty valve body component	Replace valve body assembly.
	Faulty forward clutch	Inspect. If NG, replace.
3→2 downshift fails to occur	Malfunction of shift solenoid valve-A	Inspect. If NG, replace.
	Malfunction of output shaft speed sensor (VSS)	
	Malfunction of throttle position sensor	
	Faulty valve body component	Replace valve body assembly.
	Faulty one-way No.1 clutch	Inspect. If NG, replace.
2→1 downshift fails to occur	Malfunction of shift solenoid valve-B	Inspect. If NG, replace.
	Malfunction of output shaft speed sensor (VSS)	
	Malfunction of throttle position sensor	
	Faulty valve body component	Replace valve body assembly.
	Faulty one-way No.2 clutch	Inspect. If NG, replace.
Gear shift point is incorrect	Abnormal engine condition	Inspect and repair engine.
	Malfunction of output shaft speed sensor (VSS)	Inspect. If NG, replace.
	Malfunction of throttle position sensor	
	Malfunction of pressure control solenoid valve	Inspect. If NG, replace valve body assembly.

Condition	Possible Cause	Correction
TCC (lock-up) function does not operate	Malfunction of TCC solenoid valve	Inspect. If NG, replace.
	Malfunction of shift solenoid valve-A and/or-B	
	Malfunction of brake light switch	
	Malfunction of engine coolant temperature sensor	
	Malfunction of output shaft speed sensor (VSS)	
	Malfunction of input shaft speed sensor	
	Malfunction of throttle position sensor	
	Malfunction of transmission range sensor	
	Malfunction of transmission fluid temperature sensor	
	Malfunction of pressure control solenoid valve	Inspect. If NG, replace valve body assembly.
	Faulty valve body component	Replace valve body assembly.
	Faulty torque converter	Replace.

Manual Road Test

This test checks the gears being used in “L”, “2” or “D” range when driven with unoperated gear shift control system. Test drive vehicle on a level road.

NOTE:

Before this test, check diagnostic trouble code (DTC).

1) With select lever in “P”, start engine and warm it up.

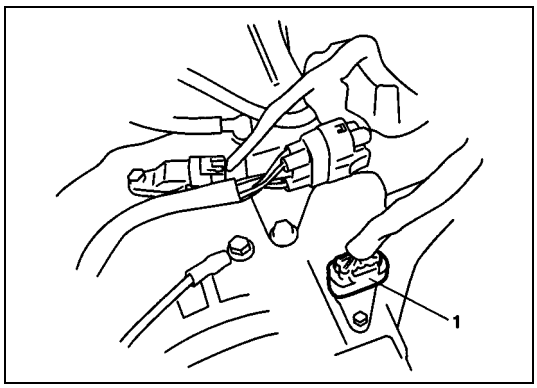

2) After warming up engine, turn ignition switch OFF and disconnect valve body harness connector (1).

3) With select lever in “L” range, start vehicle and check that 3rd gear is being used referring to table shown below.

Vehicle speed per 1000 rpm in engine speed (V1000 table, reference)

Gear position	Vehicle speed
1st	9.2 km/h (5.7 mile/h)
2nd	16.8 km/h (10.4 mile/h)
3rd	26.4 km/h (16.4 mile/h)
4th (O/D)	37.9 km/h (23.6 mile/h)
Reverse	11.7 km/h (7.3 mile/h)

4) While vehicle is running, shift select lever to “2” range and check that 3rd gear is being used.
5) While vehicle is running, shift select lever to “D” range and check that 3rd gear is being used.
6) After above checks, stop vehicle then turn ignition switch OFF, and connect valve body harness connector.
7) Clear DTC.

Troubleshooting

Condition	Possible Cause	Correction
Operated gear is not correct	Faulty valve body component	Replace valve body assembly.
	Faulty clutch or brake	Inspect clutch and brake. If any parts are faulty, replace them.

Engine Brake Test

WARNING:
Before test, make sure that there is no vehicle behind so as to prevent rear-end collision.

1) While driving vehicle in 3rd gear of “D” range, shift select lever down to “2” range and check if engine brake operates.
2) In the same way as in Step 1), check engine brake for operation when select lever is shifted down to “L” range.
3) Engine brake should operate in above test.

Troubleshooting

Condition	Possible Cause	Correction
Failure to operate when shifted down to “2” range	Faulty valve body component	Replace valve body assembly.
	Faulty O/D and 2nd coast brake	Inspect. If NG, replace.
Failure to operate when shifted down to “L” range	Faulty valve body component	Replace valve body assembly.
	Faulty 1st and reverse brake	Inspect. If NG, replace.

Stall Test

This test is to check overall performance of automatic transaxle and engine by measuring stall speed at “D” and “R” ranges. Be sure to perform this test only when transaxle fluid is at normal operating temperature and its level is between FULL and LOW marks.

CAUTION:
- **Do not run engine at stall more than 5 seconds continuously, or fluid temperature may rise excessively high.**
- **After performing stall test, be sure to leave engine running at idle for longer than 1 minute before another stall test.**

1) Apply parking brake and block wheels.
2) Install tachometer.
3) Start engine with select lever shifted to “P” range.
4) Depress brake pedal fully.
5) Shift select lever to “D” range and depress accelerator pedal fully while watching tachometer. Read engine rpm quickly when it has become constant (stall speed).
6) Release accelerator pedal immediately after stall speed is checked.
7) In the same way, check stall speed in “R” range.
8) Stall speed should be within following specification.

Engine stall speed
Standard: 2,050 – 2,350 rpm

Troubleshooting

Condition	Possible Cause	Correction
Lower than standard level in both “D” and “R” range	Engine output torque failure	Inspect and repair engine.
	Faulty one-way clutch of torque converter	Replace torque converter.
Higher than standard level in “D” range	Malfunction of pressure control solenoid valve (Low line pressure)	Inspect. If NG, replace valve body assembly.
	Faulty valve body component	Replace valve body assembly.
	Slippery forward clutch	Inspect. If NG, replace.
	Faulty one-way No.2 clutch	
	Leakage from “D” range fluid pressure circuit	Overhaul or replace valve body assembly.
Higher than standard level in “R” range	Malfunction of pressure control solenoid valve (Low line pressure)	Inspect. If NG, replace valve body assembly.
	Faulty valve body component	Replace valve body assembly.
	Slippery reverse clutch	Inspect. If NG, replace.
	Slippery 1st and reverse brake	
	Leakage from “R” range fluid pressure circuit	Overhaul or replace valve body assembly.
Higher than standard level in both “D” and “R” range	Malfunction of pressure control solenoid valve (Low line pressure)	Inspect. If NG, replace valve body assembly.
	Faulty valve body component	Replace valve body assembly.
	Clogged oil strainer	Replace.
	Faulty oil pump	Inspect. If NG, replace.
	Leakage from both “D” and “R” range fluid pressure circuit	Overhaul or replace valve body assembly.

Time Lag Test

This test is to check conditions of clutch, brake and fluid pressure. “Time lag” means time elapsed since selector lever is shifted with engine idling till shock is felt.

1) With chocks placed before and behind front and rear wheels respectively, depress brake pedal.
2) Start engine.
3) With stop watch ready, shift select lever from “N” to “D” range and measure time from that moment till shock is felt.
4) Similarly measure time lag by shifting select lever from “N” to “R” range.

Gear shifting time lag
“N” → “D”: Less than 0.7 sec.
“N” → “R”: Less than 1.2 sec.

NOTE:

- **When repeating this test, be sure to wait at least one minute after select lever is shifted back to “N” range.**
- **Engine should be warmed up fully for this test.**
- **Repeat test 3 times and take average of those data for final time lag data.**

Troubleshooting

Condition	Possible Cause	Correction
“N” → “D” time lag exceeds specification	Malfunction of transmission fluid temperature sensor	Inspect. If NG, replace.
	Malfunction of pressure control solenoid valve (Low line pressure)	Inspect. If NG, replace valve body assembly.
	Faulty valve body component	Replace valve body assembly.
	Clogged oil strainer	Replace.
	Faulty oil pump	Inspect. If NG, replace.
	Faulty forward clutch	
	Faulty one-way No.2 clutch	
	Leakage from “D” range fluid pressure circuit	Overhaul or replace valve body assembly.
“N” → “R” time lag exceeds specification	Malfunction of transmission fluid temperature sensor	Inspect. If NG, replace.
	Malfunction of pressure control solenoid valve (Low line pressure)	Inspect. If NG, replace valve body assembly.
	Faulty valve body component	Replace valve body assembly.
	Clogged oil strainer	Replace.
	Faulty oil pump	Inspect. If NG, replace.
	Faulty reverse clutch	
	Faulty 1st and reverse brake	
	Leakage from “R” range fluid pressure circuit	Overhaul or replace valve body assembly.

Line Pressure Test

Purpose of this test is to check operating conditions of each part by measuring fluid pressure in fluid pressure line.
Line pressure test requires following conditions.

- Automatic fluid is at normal operating temperature (70 – 80°C /158 – 176°F).
- Fluid is replenished to proper level (between FULL and LOW on dipstick).
- Air conditioner switch is turned OFF.

1) Apply parking brake securely and place chocks against wheels.
2) Remove fluid pressure check hole plug bolt.
3) Attach oil pressure gauge to fluid pressure check hole in transaxle case.

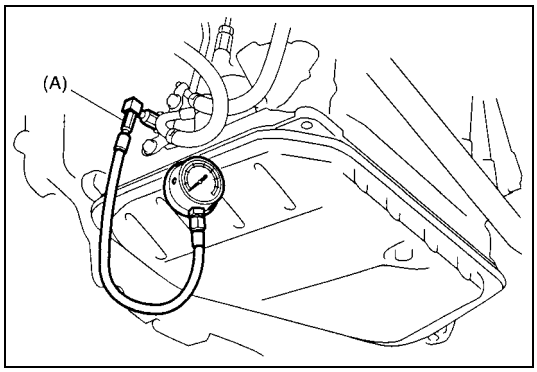

Special tool
(A): 09925-37811-001

CAUTION:
After attaching oil pressure gauge, check that no fluid leakage exists.

4) Depress foot brake fully, run engine at idle and stall then check fluid pressure in "D" or "R" range.

CAUTION:
- **Do not continue running engine at stall speed longer than 5 seconds.**
- **After performing line pressure test, be sure to leave engine running at idle for longer than one minute before performing another line pressure test.**

Automatic transmission line pressure

	"D" range	"R" range
At idle speed	**3.6 – 4.0 kg/cm^2 51 – 57 psi**	**5.8 – 6.7 kg/cm^2 82 – 95 psi**
At stall speed	**12.3 – 13.4 kg/cm^2 175 – 191 psi**	**16.2 – 18.6 kg/cm^2 230 – 264 psi**

Troubleshooting

Condition	Possible Cause	Correction
Higher than standard level in each range	Malfunction of pressure control solenoid valve (Low line pressure)	Inspect. If NG, replace valve body assembly.
	Faulty valve body component	Replace valve body assembly.
Lower than standard level in each range	Malfunction of pressure control solenoid valve (Low line pressure)	Inspect. If NG, replace valve body assembly.
	Faulty valve body component	Replace valve body assembly.
	Clogged oil strainer	Replace.
	Faulty oil pump	Inspect. If NG, replace.
	Leakage from both “D” and “R” range fluid pressure circuit	Overhaul or replace valve body assembly.
Lower than standard level only in “D” range	Leakage from “D” range fluid pressure circuit	Overhaul or replace valve body assembly.
Lower than standard level only in “R” range	Leakage from “R” range fluid pressure circuit	Overhaul or replace valve body assembly.

“P” Range Test

1) Stop vehicle on a slope of 5 degrees or more, shift select lever to “P” range and at the same time apply parking brake.
2) After stopping engine, depress brake pedal and release parking brake.
3) Then, release brake pedal gradually and check that vehicle remains stationary.
4) Depress brake pedal and shift select lever to “N” range.
5) Then, release brake pedal gradually and check that vehicle moves.

WARNING:
Before test, make sure no one is around vehicle or down on a slope and keep watchful for safety during test.

Troubleshooting

Condition	Possible Cause	Correction
Vehicle moves at “P” range or remains stationary at “N” range	Defective parking lock pawl or spring	Inspect. If NG, repair.

Diagnostic Flow Table A-1: No Gear Shift to O/D

System Description

TCM does not shift to O/D gear under any of the following conditions.

- O/D OFF switch is turned ON ("O/D OFF" lamp lights).
- Engine coolant temperature is less than 50°C (122°F).
- A/T fluid temperature is less than 20°C (68°F).
- TCM detects the following DTCs.
  P0712/P0713/P0717/P0722/P0785/P0962/P0963/P0973/P0974/P0976/P0977/P1701/P1702/P1703

Troubleshooting

WARNING:

- **When performing a road test, select a place where there is no traffic or possibility of a traffic accident and be very careful during testing to avoid occurrence of an accident.**
- **Road test should be carried out with 2 persons, a driver and tester, on a level road.**

Step	Action	Yes	No
1	Was "A/T System Check" performed?	Go to Step 2.	Go to "A/T System Check".
2	Check DTC. Is DTC P0712, P0713, P0717, P0722, P0785, P0962, P0963, P0973, P0974, P0976, P0977, P1701, P1702 and/or P1703 detected?	Perform DTC flow table to repair and retry.	Go to Step 3.
3	Perform running test under the following conditions and measure voltage between terminal "C39-16" of TCM connector and ground, terminal "C39-15" of TCM connector and ground. • O/D OFF switch is turned OFF. ("O/D OFF" lamp does not light) • Engine coolant temperature is in normal operating temperature. • Select lever is in "D" range. • Drive vehicle with 4th gear condition referring to "Automatic gear shift diagram" in this section. Do results satisfy the value as follows? Voltage between terminal "C39-16" of TCM connector and ground: 0 – 1 V Voltage between terminal "C39-15" of TCM connector and ground: 9 – 14 V	Faulty shift solenoid valve, circuit or transaxle.	"BRN" circuit shorted to power circuit or open, or "BLK/YEL" circuit shorted to ground. If wire is OK, go to Step 4.
4	O/D OFF switch signal inspection. With ignition switch ON, check voltage between terminal "C38-9" of TCM connector and ground. O/D OFF switch OFF ("O/D OFF" lamp does not light): 8 – 14 V O/D OFF switch ON ("O/D" OFF" lamp lights): 0 – 1 V Is result as specified?	Substitute a known-good TCM and recheck.	Faulty O/D OFF switch or its circuit. If OK substitute a known-good TCM and recheck.

Diagnostic Flow Table A-2: No Lock-Up Occurs

System Description

TCM turns TCC solenoid OFF under any of the following conditions.

- Brake light switch is turned ON. (Brake pedal is depressed)
- Engine coolant temperature is less than 60°C (140°F).
- Throttle opening is as much as 0%.
- TCM detects the following DTCs.
  P0705/P0707/P0712/P0713/P0717/P0722/P0785/P0962/P0963/P0973/P0974/P0976/P0977/P1701/P1702/P1703/P2769/P2770

Troubleshooting

WARNING:

- **When performing a road test, select a place where there is no traffic or possibility of a traffic accident and be very careful during testing to avoid occurrence of an accident.**
- **Road test should be carried out with 2 persons, a driver and tester, on a level road.**

Step	Action	Yes	No
1	Was “A/T System Check” performed?	Go to Step 2.	Go to “A/T System Check”.
2	Check DTC. Is DTC P0705, P0707, P0712, P0713, P0717, P0722, P0785, P0962, P0963, P0973, P0974, P0976, P0977, P1701, P1702, P1703, P2769 and/or P2770 detected?	Perform DTC flow table to repair and retry.	Go to Step 3.
3	Perform running test under the following conditions and measure voltage between terminal “C39-5” of TCM connector and ground. • O/D OFF switch is turned OFF. (“O/D OFF” lamp does not light) • Engine coolant temperature is in normal operating temperature. • Select lever is in “D” range. • Brake pedal is released. • Drive vehicle with 4th gear and TCC ON condition referring to “Automatic gear shift diagram” in this section. Is terminal voltage about 9 – 14 V?	Faulty TCC solenoid valve, circuit or transaxle.	“WHT/BLU” circuit shorted to ground. If wire is OK, go to step 4
4	Brake light switch signal inspection. With ignition switch ON, check voltage between terminal “G91-9” of ECM connector and ground. Brake pedal is released: 0 – 1 V Brake pedal is depressed: 8 – 14 V Is result as specified?	Substitute a known-good TCM and recheck.	Mis-adjusted brake light switch, faulty brake light switch or its circuit. If OK, substitute a known-good TCM and recheck.

Diagnostic Flow Table A-3: “O/D OFF” Lamp Circuit Check (“O/D OFF” Lamp Lights Steadily)

Wiring Diagram

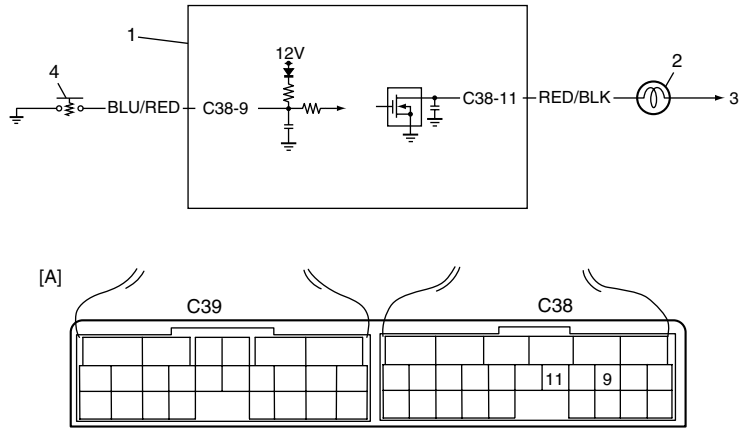

1. TCM	4. O/D off switch
2. “O/D OFF” lamp	[A]: Terminal arrangement of TCM connector (viewed from harness side)
3. To ignition switch	

Circuit Description

“O/D OFF” lamp operation of ON/OFF is controlled by transmission control module (TCM) and combination meter.

When ignition switch is turned ON with O/D OFF switch OFF and malfunction is not detected, TCM turn “O/D OFF” lamp ON only for 2 seconds to check bulb and terns it OFF.

Troubleshooting

Step	Action	Yes	No
1	Check O/D off switch status. Press O/D off switch button. Does “O/D OFF” lamp light steadily?	Go to Step 2.	System is OK.
2	Check “O/D OFF” lamp circuit for short. 1) Turn ignition switch OFF and disconnect TCM connectors. 2) Turn ignition switch ON. Does “O/D OFF” lamp light steadily yet?	“RED/BLK” circuit shorted to ground.	Go to Step 3.
3	Check O/D off switch circuit. 1) Turn ignition switch OFF. 2) Check continuity between terminal “C38-9” of disconnected harness side connector and ground. Is continuity indicated?	Go to step 4.	Substitute a known-good TCM and recheck.

Step	Action	Yes	No
4	Check O/D off switch for operation. 1) Disconnect O/D off switch coupler. 2) Check continuity between terminals under each condition below. (See Fig.) O/D off switch under being released: No continuity O/D off switch under being pressed: Continuity Is check result satisfactory?	"BLU/RED" circuit shorted to ground.	Replace O/D off switch.

Fig. for Step 2 and Step 4

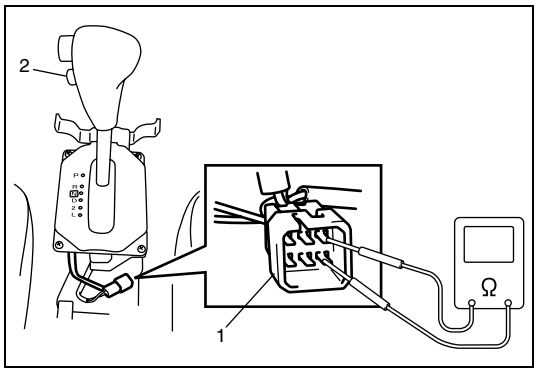

1. O/D off switch coupler
2. O/D off switch button

Diagnostic Flow Table A-4: “O/D OFF” Lamp Circuit Check (“O/D OFF” Lamp Does Not Light Anytime)

Wiring Diagram

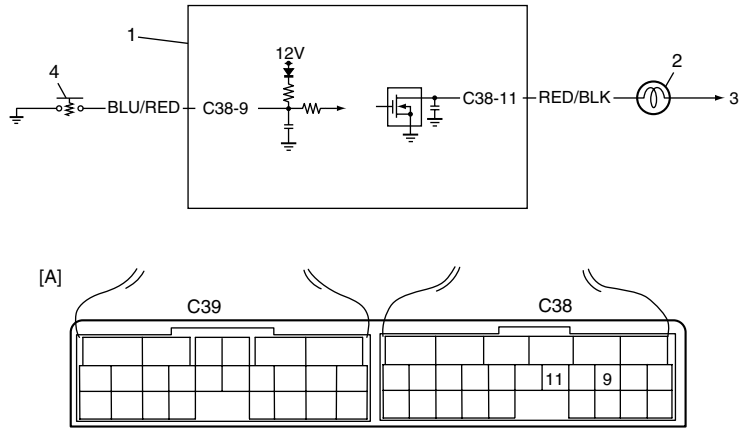

1. TCM	4. O/D off switch
2. “O/D OFF” lamp	[A]: Terminal arrangement of TCM connector (viewed from harness side)
3. To ignition switch	

Circuit Description

“O/D OFF” lamp operation of ON/OFF is controlled by transmission control module (TCM) and combination meter.

When ignition switch is turned ON with O/D OFF switch OFF and malfunction is not detected, TCM turn “O/D OFF” lamp ON only for 2 seconds to check bulb and turn it OFF.

Troubleshooting

Step	Action	Yes	No
1	Check “O/D OFF” lamp circuit. 1) Turn ignition switch OFF and disconnect TCM connectors. 2) Using service wire, connect terminal “C38-11” of disconnected harness side TCM connector and ground. 3) Turn ignition switch ON. Does “O/D OFF” lamp light?	Poor terminal “C38-11” connection. If OK, substitute a known-good TCM and recheck.	“RED/BLK” circuit open or bulb burned out.

Diagnostic Flow Table A-5: TCM Power and Ground Circuit Check

Wiring Diagram

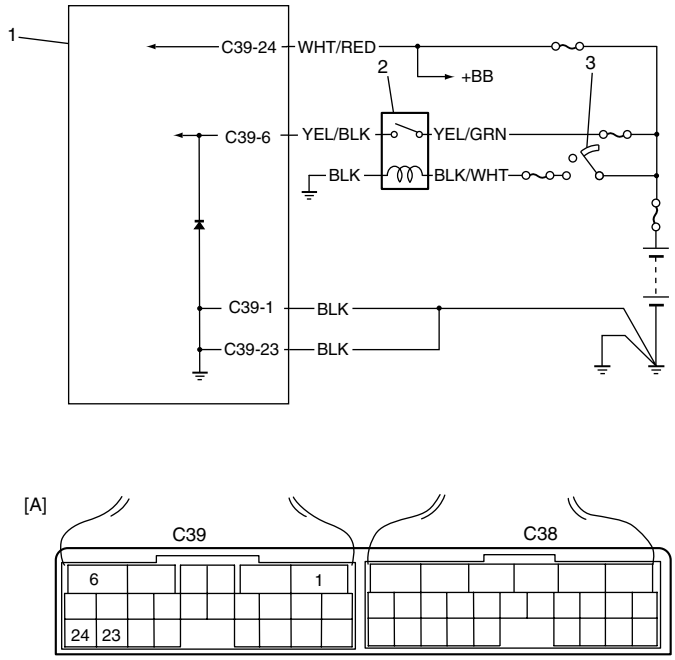

1. TCM	3. Ignition switch
2. A/T relay	[A]: Terminal arrangement of TCM connector (viewed from harness side)

Troubleshooting

Step	Action	Yes	No
1	Check TCM Back-up Power Circuit 1) Disconnect TCM connector with ignition switch OFF. 2) Check for proper connection to TCM at "C39-24" terminal. 3) If OK, check voltage at terminal "C39-24" of disconnected TCM connector. Is it 10 – 14 V?	Go to Step 2.	"WHT/RED" circuit open or shorted to ground.
2	Check TCM Power Circuit. 1) Disconnect TCM connector with ignition switch OFF. 2) Check for proper connection to TCM at "C39-6" terminal. 3) If OK, turn ignition switch ON and check voltage at terminal "C39-6" of disconnected TCM connector. Is it 10 – 14 V?	Go to Step 4.	Go to Step 3.
3	Check A/T Relay Operation. Check A/T relay operation referring to "A/T Relay" in this section. Is check result satisfactory?	"YEL/BLK", "YEL/GRN". "BLK/WHT" or "BLK" circuit for power supply open.	Replace A/T relay.

Step	Action	Yes	No
4	Check TCM Ground Circuit. 1) Turn ignition switch OFF. 2) With TCM connectors disconnected, check for proper connection to TCM at “C39-1”/ “C39-23” terminal. 3) If OK, check resistance between “C39-1”/ “C39-23” terminal of disconnected TCM connector and body ground. Is continuity indicated?	TCM power and ground circuits are in good condition.	“BLK” circuit for TCM ground open.

DTC P0705 Transmission Range Sensor Circuit Malfunction

Wiring Diagram

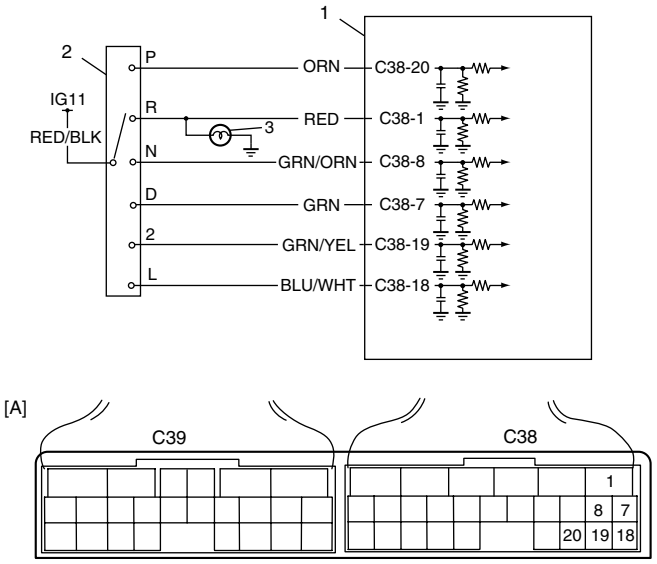

1. TCM	3. Backup lamp
2. Transmission range sensor	[A]: Terminal arrangement of TCM connector (viewed from harness side)

DTC Detecting Condition and Trouble Area

DTC DETECTING CONDITION	TROUBLE AREA
• Multiple signals are inputted simultaneously for 12 seconds.	• Select cable maladjusted. • Transmission range sensor (switch) maladjusted. • Transmission range sensor (switch) or its circuit malfunction. • TCM

DTC Confirmation Procedure

1) Connect scan tool to DLC with ignition switch OFF.
2) Clear DTCs in TCM memory by using scan tool.
3) Start engine and shift select lever to “D” range.
4) Keep engine running at idle speed for 25 seconds or more.
5) Stop vehicle and check DTC.

Troubleshooting

Step	Action	Yes	No
1	Was “Automatic Transaxle Diagnostic Flow Table” performed?	Go to Step 2.	Go to “Automatic Transaxle Diagnostic Flow Table” in this section.
2	Do you have SUZUKI scan tool?	Go to Step 3.	Go to Step 4.
3	Check Transmission range sensor(switch) circuit for operation. Check by using SUZUKI scan tool: 1) Connect SUZUKI scan tool to DLC with ignition switch OFF. 2) Turn ignition switch ON and check transmission range signal (P, R, N, D, 2 or L) on display when shifting select lever to each range. Is applicable range indicated? Are check results satisfactory?	Intermittent trouble. Check for intermittent referring to “Intermittent and Poor Connection” in Section 0A.	Go to Step 5.
4	Check Transmission range sensor(switch) circuit for operation. Check by not using SUZUKI scan tool: 1) Turn ignition switch ON. 2) Check voltage at terminals “C38-1”, “C38-7”, “C38-8”, “C38-18”, “C38-19” and “C38-20” respectively with select lever shifted to each range. Taking terminal G99-21 as an example, is battery voltage indicated only when select lever is shifted to “2” range and 0 V for other ranges as shown in table below? Check voltage at other terminals likewise, referring to Select Cable. Are check results satisfactory?	Intermittent trouble. Check for intermittent referring to “Intermittent and Poor Connection” in Section 0A.	Go to Step 5.
5	Check transmission range sensor for installation position. 1) Shift select lever to “N” range. 2) Check that “N” reference line on sensor and needle direction shaped on lock washer are aligned. Are they aligned?	Go to Step 7.	Adjust.
6	Check select cable for adjustment referring to “Select Cable” in this section. Is it adjusted correctly?	Go to Step 6.	Adjust.

Step	Action	Yes	No
7	Check Transmission range sensor(switch) referring to “Transmission Range Sensor (Shift Switch)” in this section. Are check results satisfactory?	“RED/BLK”, “ORN”, “RED”, “GRN/ORN”, “GRN”, “GRN/YEL” or “BLU/WHT” circuit shorted to power circuit or shorted each other. If wires and connections are OK, substitute a know-good TCM and recheck.	Replace Transmission range sensor.

Table for Step 4

		Terminal					
		C38-20	C38-1	C38-8	C38-7	C38-19	C38-18
Select lever position	P	8 – 14 V	0 V	0 V	0 V	0 V	0 V
	R	0 V	8 – 14 V	0 V	0 V	0 V	0 V
	N	0 V	0 V	8 – 14 V	0 V	0 V	0 V
	D	0 V	0 V	0 V	8 – 14 V	0 V	0 V
	2	0 V	0 V	0 V	0 V	8 – 14 V	0 V
	L	0 V	0 V	0 V	0 V	0 V	8 – 14 V

DTC P0707 Transmission Range Sensor Circuit Low

Wiring Diagram

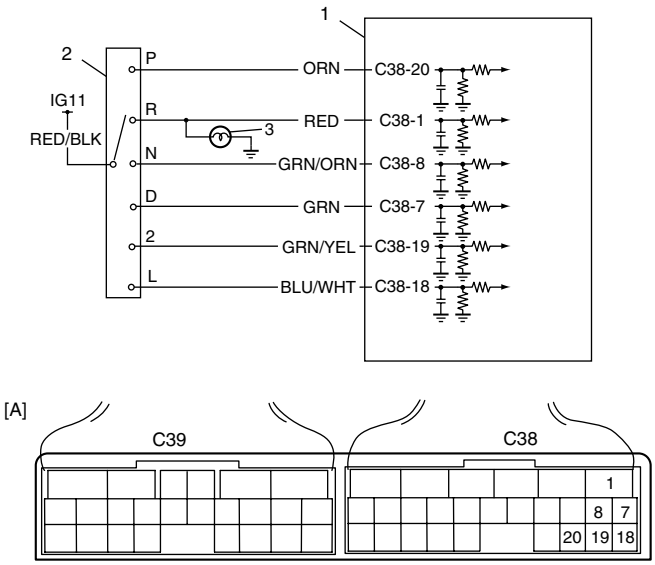

1. TCM	3. Backup lamp
2. Transmission range sensor	[A]: Terminal arrangement of TCM connector (viewed from harness side)

DTC Detecting Condition and Trouble Area

DTC DETECTING CONDITION	TROUBLE AREA
• Transmission range switch signal (P, R, N, D, 2, or L) is not inputted for more than 32 seconds when vehicle speed is faster than 30 km/h (19 mile/h) and engine speed is faster than 1500 rpm.	• Select cable maladjusted. • Transmission range sensor (switch) maladjusted. • Transmission range sensor (switch) or its circuit malfunction. • TCM

DTC Confirmation Procedure

WARNING:
- **When performing a road test, select a place where there is no traffic or possibility of a traffic accident and be very careful during testing to avoid occurrence of an accident.**
- **Road test should be carried out with 2 persons, a driver and tester, on a level road.**

1) Connect scan tool to DLC with ignition switch OFF.
2) Clear DTCs in TCM memory by using scan tool.
3) Start engine and shift select lever.
4) Shift select lever to “D” range.
5) Start vehicle and increase vehicle speed to 40 km/h (25 mile/h) or more for 1 minutes.
6) Stop vehicle and turn ignition switch OFF.
7) Repeat Step 3) to 5) one time.
8) Stop vehicle and check DTC.

Troubleshooting

Step	Action	Yes	No
1	Was “Automatic Transaxle Diagnostic Flow Table” performed?	Go to Step 2.	Go to “Automatic Transaxle Diagnostic Flow Table” in this section.
2	Do you have SUZUKI scan tool?	Go to Step 3.	Go to Step 4.
3	Check Transmission range sensor(switch) circuit for operation. Check by using SUZUKI scan tool: 1) Connect SUZUKI scan tool to DLC with ignition switch OFF. 2) Turn ignition switch ON and check transmission range signal (P, R, N, D, 2 or L) on display when shifting select lever to each range. Is applicable range indicated? Are check results satisfactory?	Intermittent trouble. Check for intermittent referring to “Intermittent and Poor Connection” in Section 0A.	Go to Step 5.
4	Check Transmission range sensor(switch) circuit for operation. Check by not using SUZUKI scan tool: 1) Turn ignition switch ON. 2) Check voltage at terminals G99-1, G99-2, G99-8, G99-9, G99-20 and G99-21 respectively with select lever shifted to each range. Taking terminal G99-21 as an example, is battery voltage indicated only when select lever is shifted to “2” range and 0 V for other ranges as shown in table below? Check voltage at other terminals likewise, referring to Fig. Are check results satisfactory?	Intermittent trouble. Check for intermittent referring to “Intermittent and Poor Connection” in Section 0A.	Go to Step 5.
5	Check transmission range sensor for installation position. 1) Shift select lever to “N” range. 2) Check that “N” reference line on sensor and needle direction shaped on lock washer are aligned. Are they aligned?	Go to Step 7.	Adjust.
6	Check select cable for adjustment referring to “Select Cable” in this section. Is it adjusted correctly?	Go to Step 6.	Adjust.
7	Check Transmission range sensor(switch) referring to “Transmission Range Sensor (Shift Switch)” in this section. Are check results satisfactory?	“RED/BLK”, “ORN”, “RED”, “GRN/ORN”, “GRN”, “GRN/YEL” or “BLU/WHT” circuit open or short to ground. If wires and connections are OK, substitute a know-good TCM and recheck.	Replace Transmission range sensor.

Table for Step 4

		Terminal					
		C38-20	C38-1	C38-8	C38-7	C38-19	C38-18
Select lever position	P	8 – 14 V	0 V	0 V	0 V	0 V	0 V
	R	0 V	8 – 14 V	0 V	0 V	0 V	0 V
	N	0 V	0 V	8 – 14 V	0 V	0 V	0 V
	D	0 V	0 V	0 V	8 – 14 V	0 V	0 V
	2	0 V	0 V	0 V	0 V	8 – 14 V	0 V
	L	0 V	0 V	0 V	0 V	0 V	8 – 14 V

DTC P0712 Transmission Fluid Temperature Sensor Circuit Low

Wiring Diagram

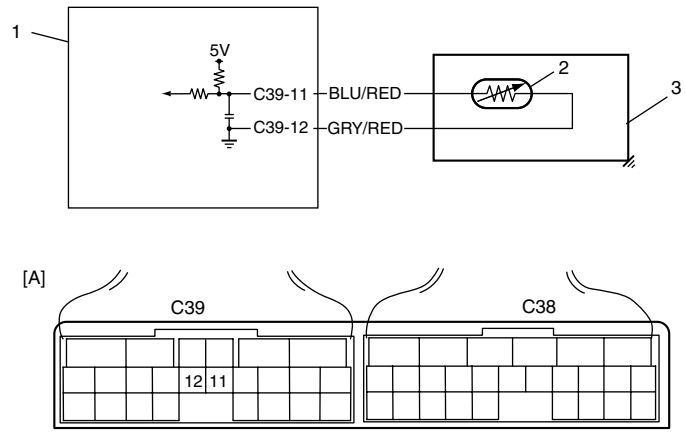

1. TCM	3. A/T
2. Transmission fluid temperature sensor	[A]: Terminal arrangement of TCM connector (viewed from harness side)

DTC Detecting Condition and Trouble Area

DTC DETECTING CONDITION	TROUBLE AREA
Transmission temperature sensor terminal voltage is less than 0.05 V for 5 minutes or more after turning ignition switch ON.	• Transmission fluid temperature sensor or its circuit malfunction. • TCM

DTC Confirmation Procedure

WARNING:
- **When performing a road test, select a place where there is no traffic or possibility of a traffic accident and be very careful during testing to avoid occurrence of an accident.**
- **Road test should be carried out with 2 persons, a driver and tester, on a level road.**

1) Connect scan tool to DLC with ignition switch OFF if available.
2) Clear DTC in TCM memory and start engine.
3) Keep engine running at idle speed for 10 minutes or more.
4) Stop vehicle and check DTC.

Troubleshooting

Step	Action	Yes	No
1	Was “Automatic Transaxle Diagnostic Flow Table” performed?	Go to Step 2.	Go to “Automatic Transaxle Diagnostic Flow Table” in this section.
2	Check Transmission Fluid Temperature Circuit for Ground Short. Check continuity between terminal C39-11 of disconnected harness side TCM connector and ground. Is continuity indicated?	“BLU/RED” circuit shorted to ground.	Go to Step 3.
3	Check Transmission Fluid Temperature Circuit for IG Short. 1) Cool down A/T fluid temperature under ambient temperature. 2) Connect TCM connectors to TCM with ignition switch OFF. 3) Turn ignition switch ON. 4) Measure voltage between terminal C44-5 of TCM connector and ground. Is it 4.6 V or more?	“BLU/RED” circuit shorted to power circuit. If circuit is OK, go to Step 4.	Intermittent trouble or faulty TCM. Check for intermittent referring to “Intermittent and Poor Connection” in Section 0A. If OK, substitute a known-good TCM and recheck.
4	Inspect Transmission Fluid Temperature Sensor. Inspect transmission temperature sensor referring to “Transmission Fluid Temperature Sensor” in this section. Is result satisfactory?	Intermittent trouble or faulty TCM. Check for intermittent referring to “Intermittent and Poor Connection” in Section 0A. If OK, substitute a known-good TCM and recheck.	Replace transmission fluid temperature sensor.

DTC P0713 Transmission Fluid Temperature Sensor Circuit High

Wiring Diagram

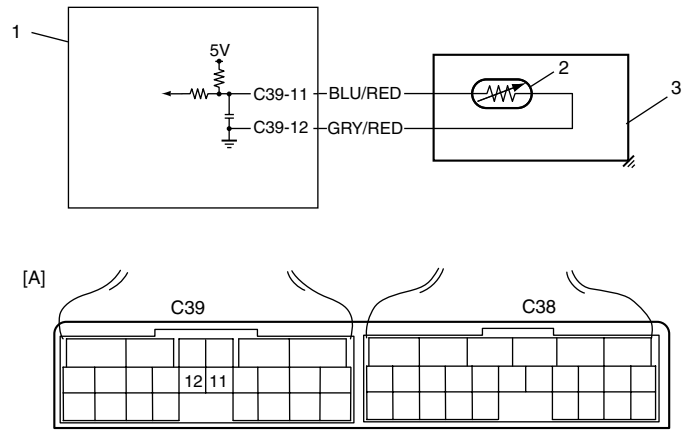

1. TCM	3. A/T	[A]: Terminal arrangement of TCM connector (viewed from harness side)
2. Transmission fluid temperature sensor	4. Valve body connector	

DTC Detecting Condition and Trouble Area

DTC DETECTING CONDITION	TROUBLE AREA
• Transmission temperature sensor terminal voltage is more than 4.6 V and shift range is in “R”, “D”, “2” or “L” for 15 minutes after starting engine.	• Transmission fluid temperature sensor or its circuit malfunction. • TCM

DTC Confirmation Procedure

WARNING:
- **When performing a road test, select a place where there is no traffic or possibility of a traffic accident and be very careful during testing to avoid occurrence of an accident.**
- **Road test should be carried out with 2 persons, a driver and tester, on a level road.**

1) Connect scan tool to DLC with ignition switch OFF if available.
2) Clear DTC in TCM memory and start engine.
3) Start vehicle and increase vehicle speed to about 40 km/h (25 mile/h) for 20 minutes or more.
4) Stop vehicle and check DTC.

Troubleshooting

Step	Action	Yes	No
1	Was “Automatic Transaxle Diagnostic Flow Table” performed?	Go to Step 2.	Go to “Automatic Transaxle Diagnostic Flow Table” in this section.
2	Check Transmission Fluid Temperature Circuit for Open. 1) Turn ignition switch OFF. 2) Disconnect TCM connectors from TCM. 3) Check for proper connection to transmission fluid temperature sensor at terminals C39-11 and C39-12. 4) If OK, check continuity between terminals C39-11 and C39-12 of disconnected harness side TCM connector. Is continuity indicated?	Go to Step 3.	“BLU/RED” or “GRN/RED” circuit open.
3	Check Transmission Fluid Temperature Circuit for IG Short. 1) Cool down A/T fluid temperature under ambient temperature. 2) Connect TCM connectors to TCM with ignition switch OFF. 3) Turn ignition switch ON. 4) Measure voltage between terminal C39-11 of TCM connector and ground. Is it 4.6 V or more?	“BLU/RED” circuit shorted to power circuit. If circuit is OK, go to Step 4.	Intermittent trouble or faulty TCM. Check for intermittent referring to “Intermittent and Poor Connection” in Section 0A. If OK, substitute a known-good TCM and recheck.
4	Inspect Transmission Fluid Temperature Sensor. Inspect transmission temperature sensor referring to “Transmission Fluid Temperature Sensor Is result satisfactory?	Intermittent trouble or faulty TCM. Check for intermittent referring to “Intermittent and Poor Connection” in Section 0A. If OK, substitute a known-good TCM and recheck.	Replace transmission fluid temperature sensor.

DTC P0717 Input/Turbine Speed Sensor Circuit Malfunction

Wiring Diagram

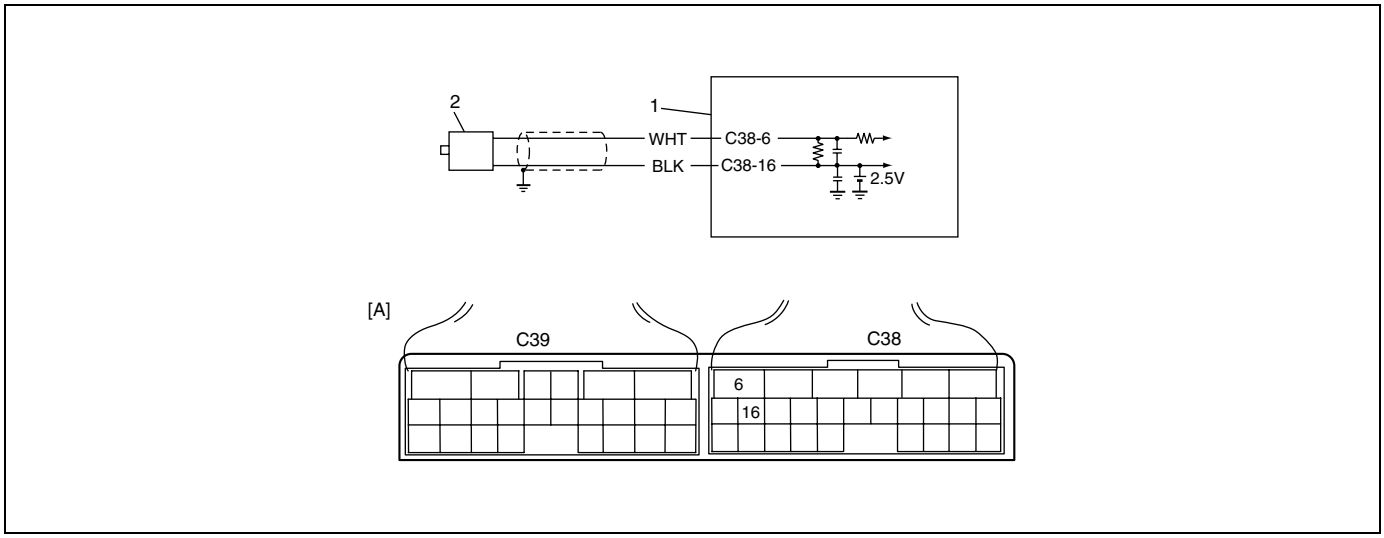

1. TCM	2. Input shaft speed sensor	[A]: Terminal arrangement of TCM connector (viewed from harness side)

DTC Detecting Condition and Trouble Area

DTC DETECTING CONDITION	TROUBLE AREA
No input shaft speed sensor signal is detected although output shaft speed sensor signals are detected.	• Input shaft speed sensor or its circuit malfunction. • Improper input shaft speed sensor installation. • Damaged direct clutch drum. • Foreign material attachment to sensor or drum. • TCM

DTC Confirmation Procedure

WARNING:
- **When performing a road test, select a place where there is no traffic or possibility of a traffic accident and be very careful during testing to avoid occurrence of an accident.**
- **Road test should be carried out with 2 persons, a driver and tester, on a level road.**

1) Connect scan tool to DLC with ignition switch OFF if available.
2) Clear DTC in TCM memory and start engine.
3) Shift selector lever to “D” range and drive vehicle at 50 km/h (31 mile/h) or more with 3rd gear at least for 5 minutes.
4) Stop vehicle and check DTC.

Troubleshooting

Step	Action	Yes	No
1	Was “A/T System Check” performed?	Go to Step 2.	Go to “Automatic Transaxle Basic Check” in this section.
2	Check Input Shaft Speed Sensor Circuit. 1) Disconnect TCM connectors with ignition switch OFF. 2) Check for proper connection to input shaft speed sensor at C38-6 and C38-16 terminals. 3) If OK, check resistance of sensor circuit. Resistance between terminals C38-6 and C38-16 of disconnected harness side TCM connector: 560 – 680 Ω at 20°C (68°F) Continuity between terminal C38-6/C38-16 of disconnected harness side TCM connector and ground: No continuity Are check result satisfactory?	Go to Step 4.	Go to Step 3.
3	Inspect Input Shaft Speed Sensor. Inspect input shaft speed sensor referring to “Input Shaft Speed Sensor”. Is result satisfactory?	“WHT” or “BLK” circuit open or short.	Replace input shaft speed sensor.
4	Check visually input shaft speed sensor and direct clutch drum for the followings. See Fig. • No damage • No foreign material attached • Correct installation Are they in good condition?	Intermittent trouble or faulty TCM. Check for intermittent referring to “Intermittent and Poor Connection” in Section 0A. If OK, substitute a known-good TCM and recheck.	Clean, repair or replace.

Fig. for Step 4

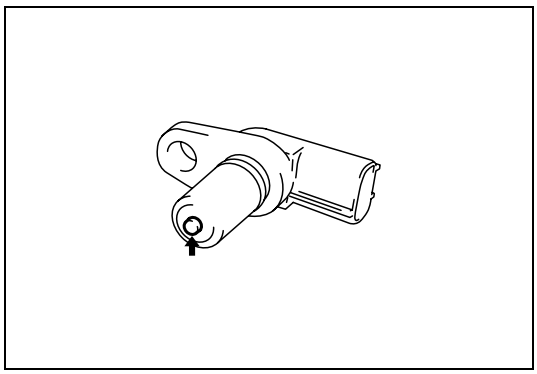

DTC P0722 Output Speed Sensor (VSS) Circuit No Signal

Wiring Diagram

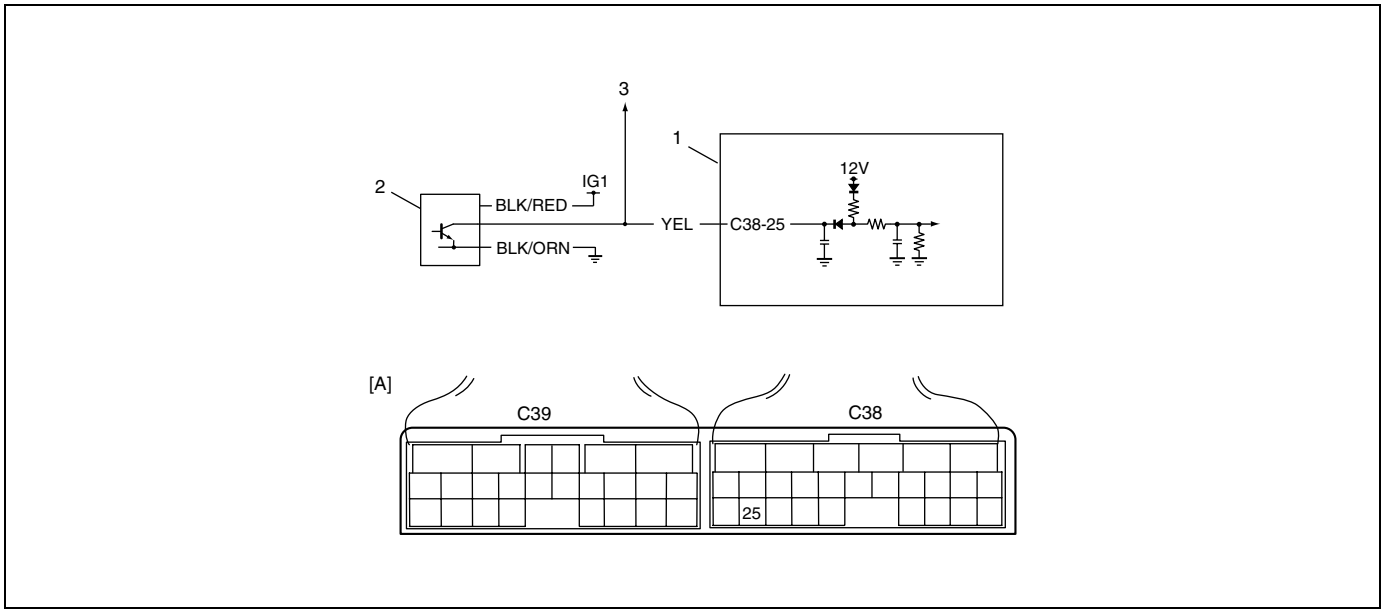

1. TCM	2. Output shaft speed sensor (VSS)	3. To ECM	[A]: Terminal arrangement of TCM connector (viewed from harness side)

DTC Detecting Condition and Trouble Area

DTC DETECTING CONDITION	TROUBLE AREA
No output shaft speed sensor signal is detected although input shaft speed sensor signals are detected while vehicle is running at 5 km/h (3 mile/h) or more vehicle speed with “D”, “2” or “L” range.	• Output shaft speed sensor or its circuit malfunction. • Damaged sensor gear (driven gear). • Damaged output shaft speed sensor (VSS) drive gear. • TCM

DTC Confirmation Procedure

WARNING:
- **When performing a road test, select a place where there is no traffic or possibility of a traffic accident and be very careful during testing to avoid occurrence of an accident.**
- **Road test should be carried out with 2 persons, a driver and tester, on a level road.**

1) Connect scan tool to DLC with ignition switch OFF if available.
2) Clear DTC in TCM memory and start engine.
3) Shift selector lever to “D” range and drive vehicle at 50 km/h (31 mile/h) or more vehicle speed at least for 3 minutes.
4) Stop vehicle check DTC.

Troubleshooting

Step	Action	Yes	No
1	Was “Automatic Transaxle Diagnostic Flow Table” in this section performed?	Go to Step 2.	Go to “Automatic Transaxle Diagnostic Flow Table” in this section.
2	Check Output Shaft Speed Sensor (VSS) Power Circuit. 1) Turn ignition switch OFF. 2) Disconnect output shaft speed sensor connector. 3) Turn ignition switch ON. 4) Measure voltage between “BLK/RED” wire terminal of disconnected output shaft speed sensor harness side connector and ground. Is it 10 – 14 V?	Go to Step 3.	“BLK/RED” wire open or shorted to ground.
3	Check Output Shaft Speed Sensor (VSS) Ground Circuit. 1) Turn ignition switch OFF. 2) Check continuity between “BLK/ORN” wire terminal of disconnected output shaft speed sensor harness side connector and ground. Is continuity indicated?	Go to Step 4.	“BLK” wire open.
4	Check Output Shaft Speed Sensor (VSS) Signal Circuit for short. 1) Disconnect TCM connectors. 2) Check continuity between “YEL” wire terminal of disconnected output shaft speed sensor harness side connector and ground. Is continuity indicated?	“YEL” wire shorted to ground.	Go to Step 5.
5	Check Output Shaft Speed Sensor (VSS) Signal Circuit for open. 1) Check continuity between “YEL” wire terminal of disconnected output shaft speed sensor harness side connector and terminal C38-25 of disconnected harness side TCM connector. Is continuity indicated?	Go to Step 6.	“YEL” wire open.
6	Inspect Output Shaft Speed Sensor (VSS). Inspect output shaft speed sensor referring to “Output Shaft Speed Sensor (VSS)” in this section. Is check result satisfactory?	Go to Step 7.	Replace output shaft speed sensor.

Step	Action	Yes	No
7	Check Output Shaft Speed Sensor (VSS) Gears Visually. Check output shaft speed sensor gears for the followings. • No damage in drive gear on differential case • No damage in driven gear in output shaft speed sensor Is result satisfactory?	Intermittent trouble or Faulty TCM. Check for intermittent referring to “Intermittent and Poor Connection” in Section 0A. If OK, substitute a known-good TCM and recheck.	Replace drive gear and/or driven gear of output shaft speed sensor.

DTC P0741/P0742 TCC Circuit Performance or Stuck OFF/TCC Circuit Stuck ON

DTC Detecting Condition and Trouble Area

[DTC P0741]

DTC DETECTING CONDITION	TROUBLE AREA
When driving vehicle with 3rd or 4th gear in "D" range, difference in revolution between engine and A/T input (input shaft speed) is lager than specification although TCM commanded TCC solenoid to turn ON.	• Mechanical malfunction of TCC solenoid valve. • Malfunction of valve body assembly. • Fluid passage clogged or leaking. • Torque converter clutch malfunction.

[DTC P0742]

DTC DETECTING CONDITION	TROUBLE AREA
When driving vehicle with 2nd, 3rd or 4th gear in "D" range, difference in revolution between engine and A/T input (input shaft speed) is smaller than specification although TCM commanded TCC solenoid to turn OFF.	• Mechanical malfunction of TCC solenoid valve. • Malfunction of valve body assembly. • Fluid passage clogged or leaking. • Torque converter clutch malfunction.

DTC Confirmation Procedure

WARNING:
- **When performing a road test, select a place where there is no traffic or possibility of a traffic accident and be very careful during testing to avoid occurrence of an accident.**
- **Road test should be carried out with 2 persons, a driver and tester, on a level road.**

1) Connect scan tool to DLC with ignition switch OFF, if available.
2) Clear DTC in TCM memory.
3) Start engine and warm it up to normal operating temperature.
4) Shift select lever to "N" and "D" range for each 10 seconds.
5) Drive vehicle with 4th in "D" range and lock-up ON for 20 seconds or longer referring to "Automatic gear shift diagram" in this section.
6) Turn O/D OFF switch ON keeping on driving in "D" range. (Confirm "O/D OFF" lamp lights.)
7) Drive vehicle with 2nd or 3rd gear in "D" range, 15 – 20% throttle opening and at vehicle speed of 25 – 40 km/h (16 – 25 mile/h).
8) Stop vehicle and turn ignition switch OFF.
9) Repeat Step 3) to 7) one time.
10) Stop vehicle and check DTC.

DTC Troubleshooting

Step	Action	Yes	No
1	Was "Automatic Transaxle Diagnostic Flow Table" performed?	Go to Step 2.	Go to "Automatic Transaxle Diagnostic Flow Table" in this section.
2	Check TCC solenoid valve for operation referring to "Solenoid Valves (Shift Solenoid Valves, TCC Solenoid Valve and Timing Solenoid Valve)" in this section. Are they in good condition?	Clean fluid passage or replace valve body assembly.	Replace TCC solenoid valve.

DTC P0751/P0752/P0756/P0757 Shift Solenoid-A (No.1) Performance or Stuck OFF/Shift Solenoid-A (No.1) Stuck ON/Shift Solenoid-B (No.2) Performance or Stuck OFF/Shift Solenoid-B (No.2) Stuck ON

DTC Detecting Condition and Trouble Area

[DTC P0751]

DTC DETECTING CONDITION	TROUBLE AREA
3rd gear ratio is detected although TCM command is for 2nd gear while vehicle running at 15 km/h (10 mile/h) or more in “D” range after engine being warmed up.	• Mechanical malfunction of shift solenoid valve-A (No.1). • Malfunction of valve body assembly. • Fluid passage clogged or leaking. • Mechanical malfunction of automatic transaxle (clutch, brake or gear etc.).

[DTC P0752]

DTC DETECTING CONDITION	TROUBLE AREA
2nd gear ratio is detected although TCM command is for 3rd gear while vehicle running at 15 km/h (10 mile/h) or more in “D” range after engine being warmed up.	• Mechanical malfunction of shift solenoid valve-A (No.1). • Malfunction of valve body assembly. • Fluid passage clogged or leaking. • Mechanical malfunction of automatic transaxle (clutch, brake or gear etc.).

[DTC P0756]

DTC DETECTING CONDITION	TROUBLE AREA
3rd gear ratio is detected although TCM command is for 4th gear while vehicle running at 15 km/h (10 mile/h) or more in “D” range after engine being warmed up.	• Mechanical malfunction of shift solenoid valve-B (No.2). • Malfunction of valve body assembly. • Fluid passage clogged or leaking. • Mechanical malfunction of automatic transaxle (clutch, brake or gear etc.).

[DTC P0757]

DTC DETECTING CONDITION	TROUBLE AREA
4th gear ratio is detected although TCM command is for 3rd gear while vehicle running at 15 km/h (10 mile/h) or more in “D” range after engine being warmed up.	• Mechanical malfunction of shift solenoid valve-B (No.2). • Malfunction of valve body assembly. • Fluid passage clogged or leaking. • Mechanical malfunction of automatic transaxle (clutch, brake or gear etc.).

DTC Confirmation Procedure

WARNING:

- **When performing a road test, select a place where there is no traffic or possibility of a traffic accident and be very careful during testing to avoid occurrence of an accident.**
- **Road test should be carried out with 2 persons, a driver and tester, on a level road.**

1) Connect scan tool to DLC with ignition switch OFF, if available.
2) Clear DTC in TCM memory.
3) Start engine and warm it up to normal operating temperature.
4) Shift select lever to “N” and “D” range for each 10 seconds.
5) Start vehicle and increase vehicle speed to 65 km/h (40 mile/h) with throttle position 10% or more.
6) Stop vehicle and turn ignition switch OFF.
7) Repeat Step 3) to 5) one time.
8) Stop vehicle and check DTC.

DTC Troubleshooting

Step	Action	Yes	No
1	Was “Automatic Transaxle Diagnostic Flow Table” performed?	Go to Step 2.	Go to “Automatic Transaxle Diagnostic Flow Table” in this section.
2	Check shift solenoid valve-A (No.1) or -B (No.2) for operation referring to “Solenoid Valves (Shift Solenoid Valves, TCC Solenoid Valve and Timing Solenoid Valve)” in this section. Are they in good condition?	Clean fluid passage or replace valve body assembly.	Replace shift solenoid valve-A or -B.

DTC P0785 Timing Solenoid

Wiring Diagram

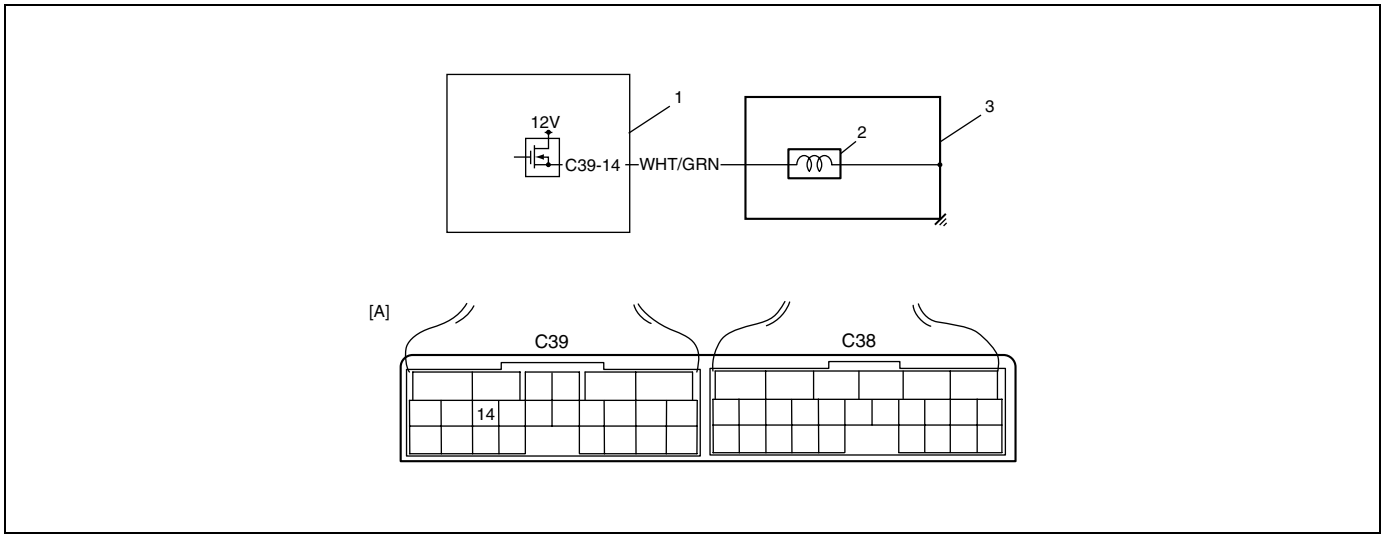

1. TCM	3. A/T
2. Timing solenoid valve	[A]: Terminal arrangement of TCM connector (viewed from harness side)

DTC Detecting Condition and Trouble Area

DTC DETECTING CONDITION	TROUBLE AREA
• Voltage of timing solenoid valve TCM terminal is low although TCM is commanding timing solenoid valve to turn ON. or • Voltage of timing solenoid valve TCM terminal is high although TCM is commanding timing solenoid valve to turn OFF.	• Timing solenoid valve circuit shorted to ground. • Timing solenoid valve circuit open or shorted to power circuit. • Timing solenoid valve malfunction. • TCM

DTC Confirmation Procedure

1) Connect scan tool to DLC with ignition switch OFF, if available.
2) Clear DTC in TCM memory.
3) Start engine and shift selector lever to “N” range.
4) Repeat shifting selector lever from “N” range to “D” range and vice versa for 3 times.
5) Check DTC.

Troubleshooting

Step	Action	Yes	No
1	Was “A/T System Check” performed?	Go to Step 2.	Go to “Automatic Transaxle Basic Check” in this section.
2	Check Timing Solenoid Valve Circuit for IG Short or Open. 1) Turn ignition switch ON and measure voltage between terminal “C39-14” of harness side TCM connector and ground. 2) Is it 0 – 1 V?	Go to Step 3.	“WHT/GRN” circuit shorted to power circuit or open.
3	Check Timing Solenoid Valve Resistance 1) Turn ignition switch OFF. 2) Disconnect valve body harness connector on transaxle. 3) Check for proper connection to solenoid valve at “WHT/RED” circuit. 4) Check resistance of solenoid valve. See Fig. Resistance between terminal of transaxle side valve body harness connector and transaxle: 11 – 15 Ω (at 20°C (68°F)) Is check result satisfactory?	Go to Step 4.	Replace timing solenoid valve or lead wire.
4	Check Timing Solenoid Valve Circuit for Ground Short. 1) Connect valve body harness connector. 2) Disconnect TCM connectors. 3) Measure resistance between terminal “C39-14” of disconnected harness side TCM connector and ground. Is it 11 – 15 Ω (at 20°C (68°F))	Intermittent trouble or faulty TCM. Check for intermittent referring to “Intermittent and Poor Connection” in Section 0A. If OK, substitute a known-good TCM and recheck.	“WHT/RED” circuit shorted to ground.

Fig. for Step 4

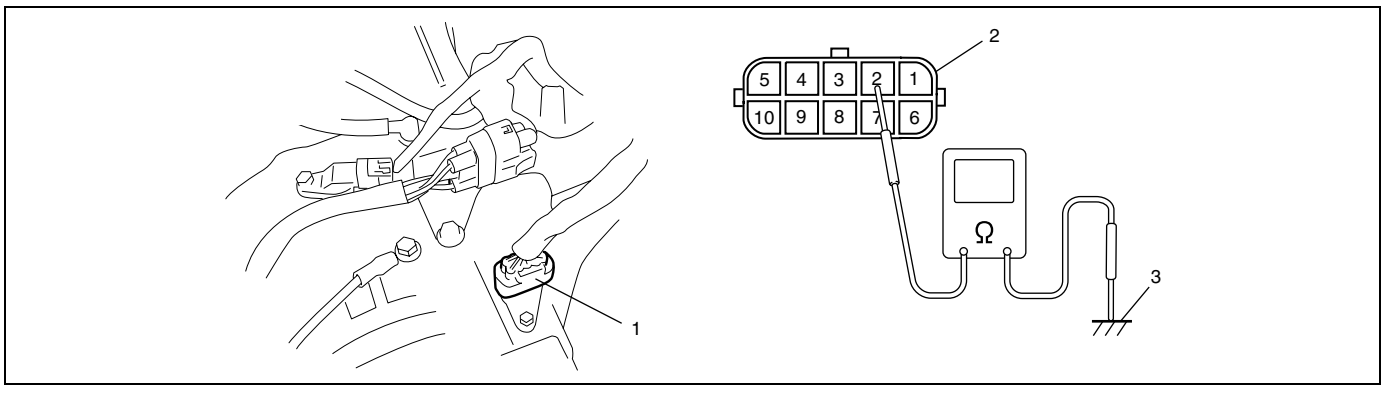

1.	Valve body harness connector on harness
2.	Valve body harness connector on transaxle
3.	Ground (Transaxle)

DTC P0962 Pressure Control Solenoid Control Circuit Low

Wiring Diagram

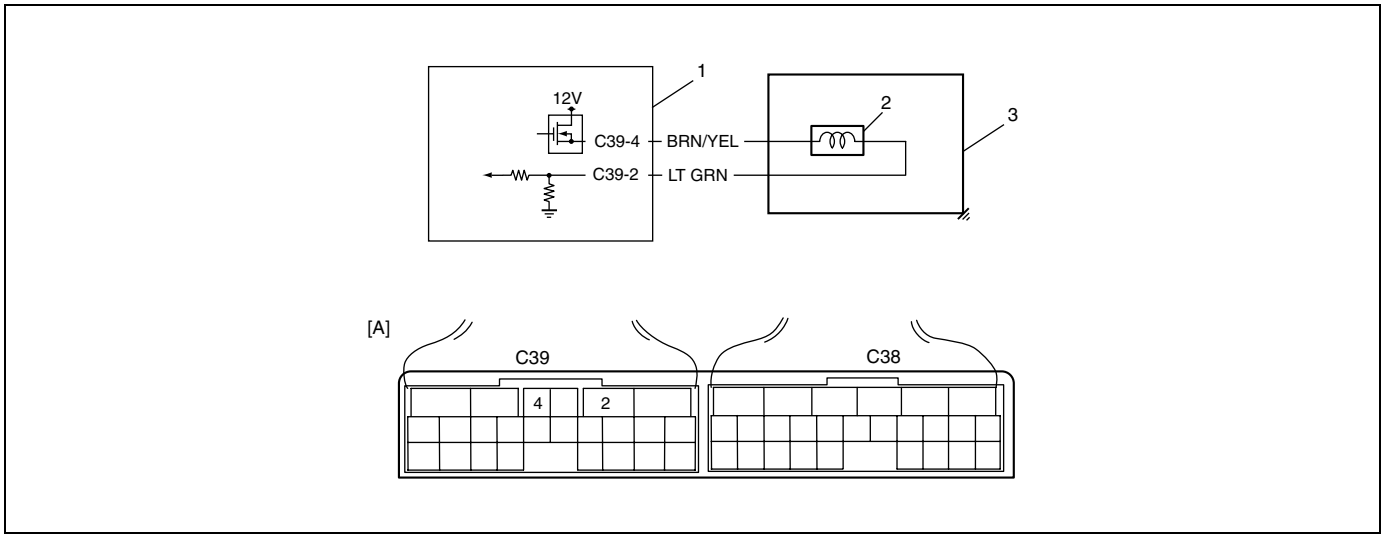

1. TCM	3. A/T
2. Pressure control solenoid valve	[A]: Terminal arrangement of TCM connector (Viewed from harness side)

DTC Detecting Condition and Trouble Area

DTC DETECTING CONDITION	TROUBLE AREA
Pressure control solenoid valve output voltage is too low comparing with TCM command value.	• Pressure control solenoid valve circuit open or shorted to ground. • Malfunction of pressure control solenoid valve • TCM

DTC Confirmation Procedure

1) Connect scan tool to DLC with ignition switch OFF, if available.
2) Clear DTC in TCM memory.
3) Start engine.
4) Keep engine running at idle speed for 30 seconds or more.
5) Stop vehicle and check DTC.

DTC Troubleshooting

Step	Action	Yes	No
1	Was “Automatic Transaxle Diagnostic Flow Table” performed?	Go to Step 2.	Go to “Automatic Transaxle Diagnostic Flow Table” in this section.

Step	Action	Yes	No
2	Check pressure control solenoid valve resistance 1) Turn ignition switch OFF 2) Disconnect valve body harness connector on automatic transmission. 3) Check for proper connection to solenoid at "BRN/YEL" and "LT GRN" circuit. 4) Check resistance of pressure control solenoid. See Fig. Resistance between pressure control solenoid valve terminals of transmission side valve body harness connector: 5.0 – 5.6 Ω (at 20°C (68°F)) Resistance between pressure control solenoid valve terminals of transmission side valve body harness connector and transmission body: Infinity Is check results satisfactory?	Go to Step 3.	Replace pressure control solenoid valve or valve body harness.
3	Check pressure control solenoid valve circuit for ground short 1) Connect valve body harness connector. 2) Disconnect TCM connectors. 3) Check for proper connection to TCM at terminals "C39-2" and "C39-4". If connection is OK, check continuity between terminal "C39-4" of disconnected harness side TCM connector and ground. Is continuity indicated?	"BRN/YEL" or "LT GRN/RED" circuit shorted to ground.	Go to Step 4.
4	Check pressure control solenoid valve circuit for open 1) Check resistance between terminals "C39-2" and "C39-4" of disconnected harness side TCM connector. Is it infinity?	"BRN/YEL" or "LT GRN" circuit open.	Intermittent trouble or faulty TCM. Check for intermittent referring to "Intermittent and Poor Connection" in Section 0A. If OK, substitute a known-good TCM and recheck

Fig. for Step 2.

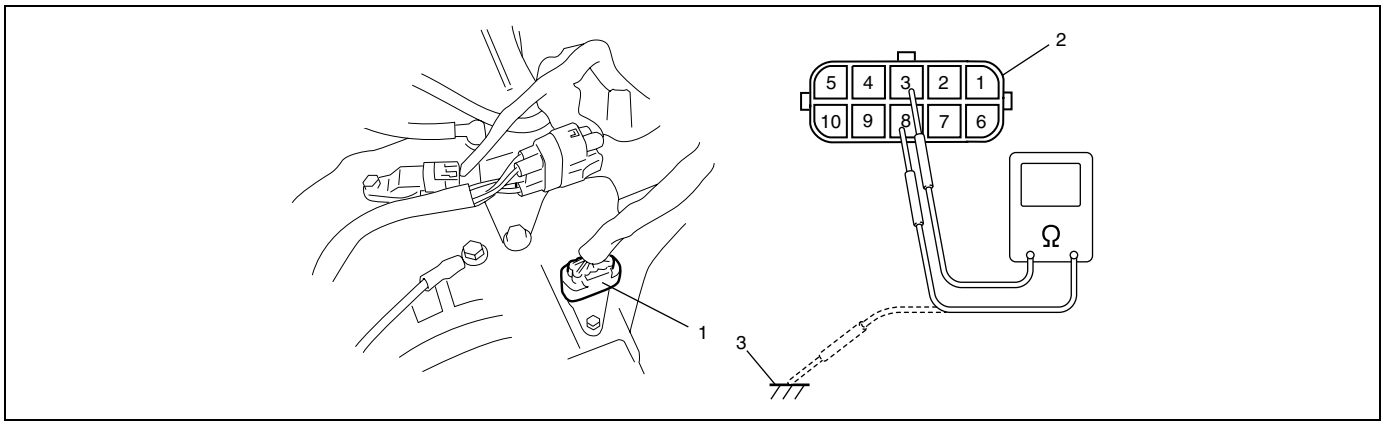

1. Valve body harness connector on harness	2. Valve body harness connector on transaxle	3. Ground (transaxle)

DTC P0963 Pressure Control Solenoid Control Circuit High

Wiring Diagram

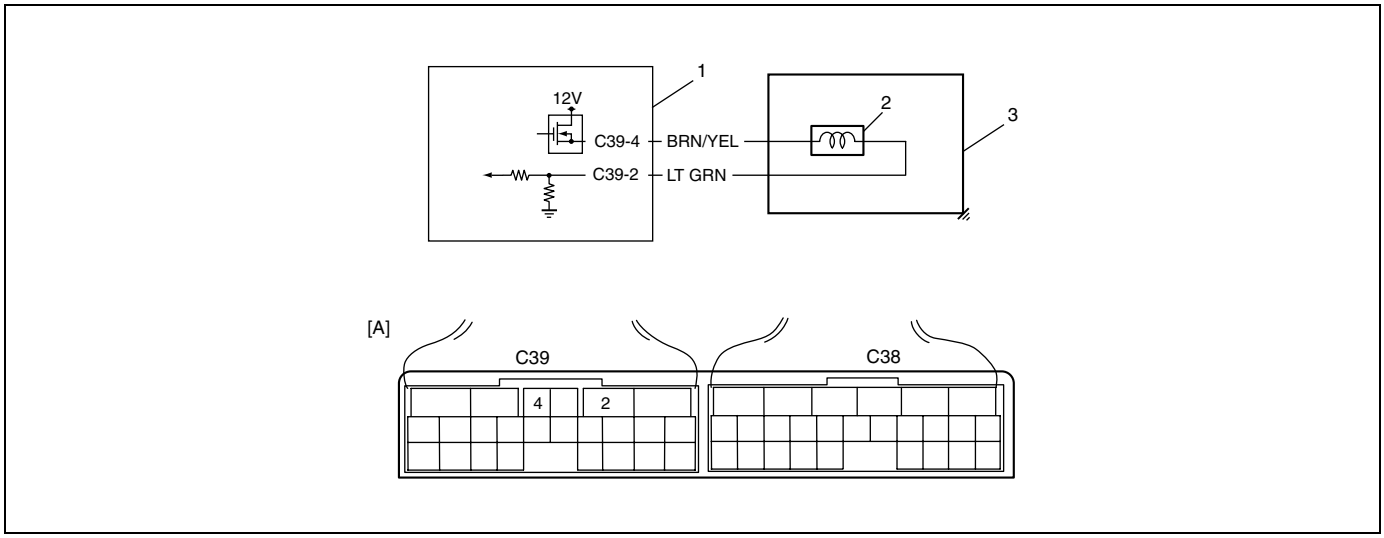

1. TCM	3. A/T
2. Pressure control solenoid valve	[A]: Terminal arrangement of TCM connector (Viewed from harness side)

DTC Detecting Condition and Trouble Area

DTC DETECTING CONDITION	TROUBLE AREA
Pressure control solenoid valve output voltage is too high comparing with TCM command value.	• Pressure control solenoid valve circuit shorted to power circuit. • Pressure control solenoid valve malfunction • TCM

DTC Confirmation Procedure

1) Connect scan tool to DLC with ignition switch OFF, if available.
2) Clear DTC in TCM memory.
3) Start engine.
4) Keep engine running at idle speed for 10 seconds or more.
5) Check DTC.

DTC Troubleshooting

Step	Action	Yes	No
1	Was “Automatic Transaxle Diagnostic Flow Table” performed?	Go to Step 2.	Go to “Automatic Transaxle Diagnostic Flow Table” in this section.
2	Check pressure control solenoid circuit for IG short 1) Connect valve body harness connector. 2) Disconnect TCM connectors. 3) Check for proper connection to TCM at terminal “C39-2” and “C39-4”. 4) If connection is OK, turn ignition switch ON and measure voltage between terminal “C39-4” of disconnected harness side TCM connector and ground. Is it 0 – 2 V?	Go to Step 3.	“BRN/YEL” or “LT GRN” circuit shorted to power circuit.

Step	Action	Yes	No
3	Check pressure control solenoid valve resistance 1) Turn ignition switch OFF 2) Disconnect valve body harness connector on automatic transmission. 3) Check for proper connection to solenoid at "BRN/YEL" and "LT GRN" circuit. 4) Check resistance of pressure control solenoid. See Fig. Resistance between pressure control solenoid valve terminals of transmission side valve body harness connector: 5.0 – 5.6 Ω (at 20°C (68°F)) Resistance between pressure control solenoid valve terminals of transmission side valve body harness connector and transmission body: Infinity Is check results satisfactory?	Intermittent trouble or faulty TCM. Check for intermittent referring to "Intermittent and Poor Connection" in Section 0A. If OK, substitute a known-good TCM and recheck.	Replace pressure control solenoid valve or valve body harness.

Fig. for Step 3.

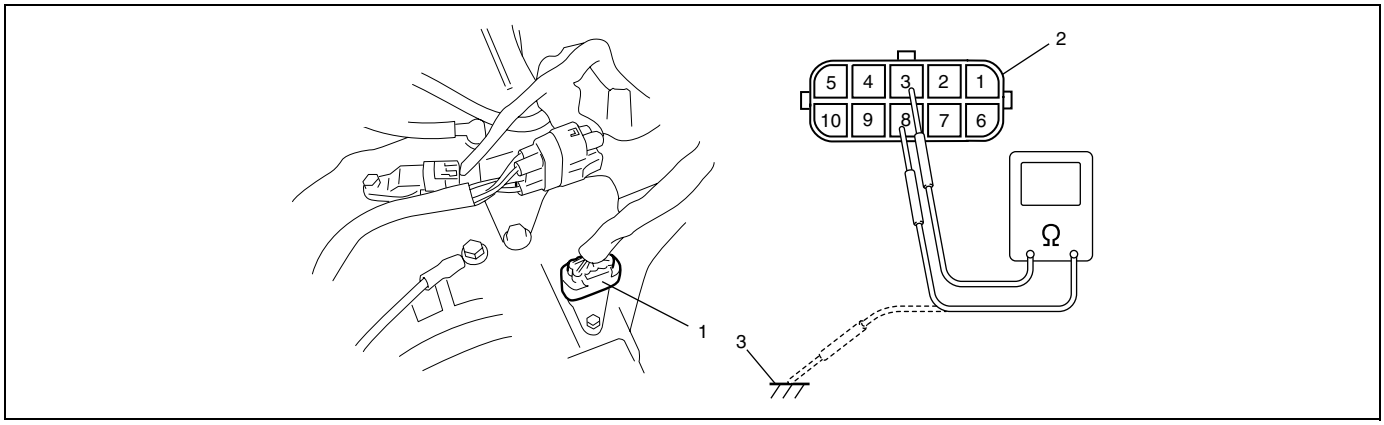

1.	Valve body harness connector on harness
2.	Valve body harness connector on transaxle
3.	Ground (transaxle)

DTC P0974/P0977 Shift Solenoid-A (No.1) Control Circuit High/Shift Solenoid-B (No.2) Control Circuit High

Wiring Diagram

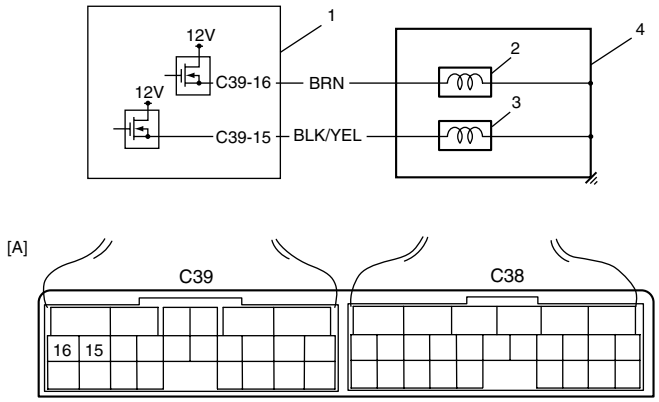

1. TCM	3. Shift solenoid valve-B (No.2)	[A]: Terminal arrangement of TCM connector (Viewed from harness side)
2. Shift solenoid valve-A (No.1)	4. A/T	

DTC Detecting Condition and Trouble Area

DTC DETECTING CONDITION	TROUBLE AREA
Voltage of shift solenoid valve TCM terminal is high although TCM is commanding shift solenoid to turn OFF	• Shift solenoid valve circuit open or shorted to power circuit. • Malfunction of shift solenoid valve • TCM

DTC Confirmation Procedure

WARNING:

- **When performing a road test, select a place where there is no traffic or possibility of a traffic accident and be very careful during testing to avoid occurrence of an accident.**
- **Road test should be carried out with 2 persons, a driver and tester, on a level road.**

1) Connect scan tool to DLC with ignition switch OFF, if available.
2) Clear DTC in TCM memory.
3) Start engine shift select lever to “D” range.
4) Start vehicle and increase vehicle speed until gear position reaches 3rd or 4th gear.
5) Decrease vehicle speed and stop vehicle.
6) Check DTC.

DTC Troubleshooting

Step	Action	Yes	No
1	Was “Automatic Transaxle Diagnostic Flow Table” performed?	Go to Step 2.	Go to “Automatic Transaxle Diagnostic Flow Table” in this section.

Step	Action	Yes	No
2	Check shift solenoid valve circuit for IG short 1) Connect valve body harness connector. 2) Disconnect TCM connectors. 3) Check for proper connection to TCM at terminal “C39-16” (for shift solenoid valve-A (No.1)) or “C39-15” (for shift solenoid valve-B (No.2)). 4) If connection is OK, turn ignition switch ON and measure voltage between terminal “C39-16” (for shift solenoid valve-A (No.1)) or “C39-15” (for shift solenoid valve-B (No.2)) of disconnected harness side TCM connector and ground. Is it 0 – 2 V?	Go to Step 3.	DTC P0974: “BRN” circuit shorted to power circuit. DTC P0977: “BLK/YEL” circuit shorted to power circuit.
3	Check shift solenoid valve resistance 1) Turn ignition switch OFF. 2) Disconnect valve body harness connector on automatic transmission. 3) Check for proper connection to solenoid at “BRN” (for shift solenoid valve-A (No.1)) or “BLK/YEL” (for shift solenoid valve-B (No.2)) circuit. Check resistance of solenoid valve. See Fig. Resistance between shift solenoid valve-A (No.1) terminal and transaxle: 11 – 15 Ω at 20°C? (68°F) Resistance between shift solenoid valve-B (No.2) terminal and transaxle: 11 – 15 Ω at 20°C? (68°F) Is check results satisfactory?	Intermittent trouble or faulty TCM. Check for intermittent referring to “Intermittent and Poor Connection” in Section 0A. If OK, substitute a known-good TCM and recheck.	Replace applicable shift solenoid valve or valve body harness.

Fig. for Step 3.

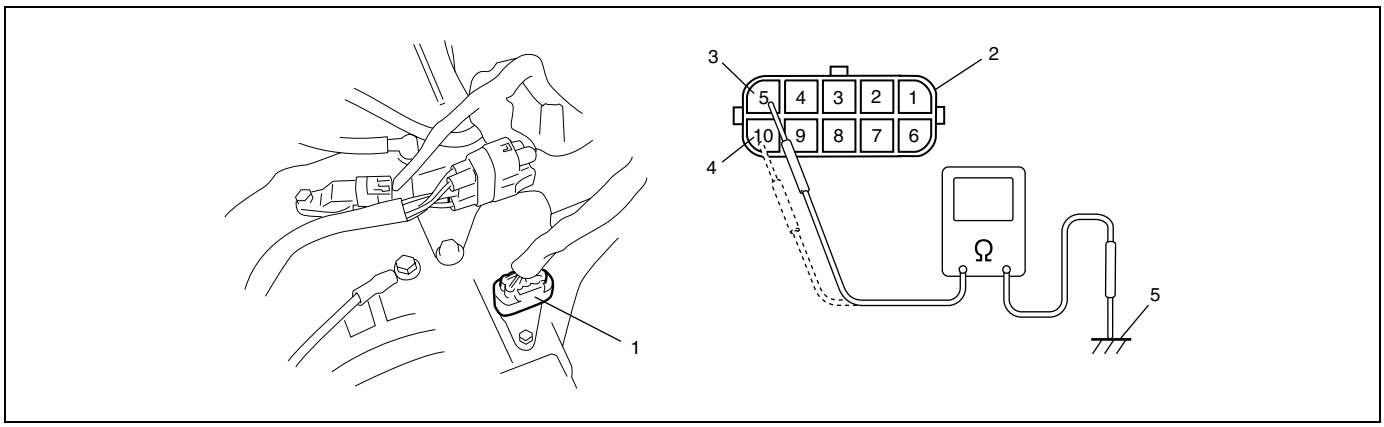

1.	Valve body harness connector on harness
2.	Valve body harness connector on transaxle
3.	Shift solenoid valve-A (No.1) terminal
4.	Shift solenoid valve-B (No.2) terminal
5.	Ground (transaxle)

DTC P1701 CAN Communication Error

Wiring Diagram

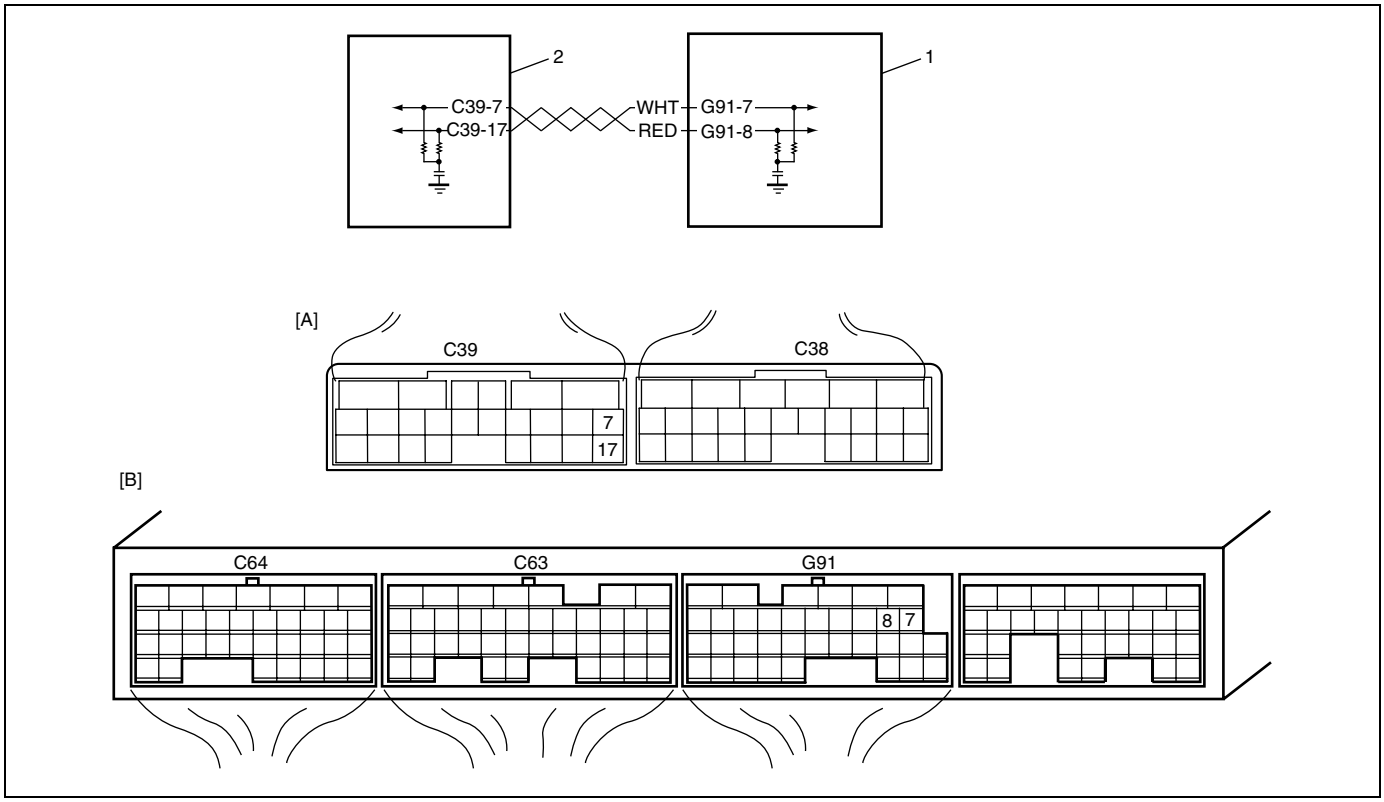

1. ECM	[A]: Terminal arrangement of TCM connector (Viewed from harness side)
2. TCM	[B]: Terminal arrangement of ECM connector (Viewed from harness side)

DTC Detecting Condition and Trouble Area

DTC DETECTING CONDITION	TROUBLE AREA
Transmission or reception error of communication data is detected by TCM for specified time continuously.	• "RED" or "WHT" wire circuit open or short • TCM • ECM

DTC Confirmation Procedure

1) Connect scan tool to DLC with ignition switch OFF, if available.
2) Clear DTC in TCM memory.
3) Start engine and warm it up to normal operating temperature.
4) Check DTC.

DTC Troubleshooting

Step	Action	Yes	No
1	Was "Automatic Transaxle Diagnostic Flow Table" performed?	Go to Step 2.	Go to "Automatic Transaxle Diagnostic Flow Table" in this section.

Step	Action	Yes	No
2	Check CAN communication circuit for open. 1) Turn ignition switch to OFF position. 2) Disconnect connectors from ECM and TCM. 3) Check for proper connection to “G91-7” terminal of ECM connector and “C39-7” terminal of TCM connector. If OK, measure resistance between “G91-7” terminal of ECM connector and “C39-7” terminal of TCM connector. Is resistance 1 Ω or less?	Go to Step 3.	“RED” wire circuit open or high resistance.
3	Check CAN communication circuit for power short. 1) Turn ignition switch to ON position. 2) Measure voltage between “C39-7” terminal of TCM connector and vehicle body ground. Is voltage 0 – 1 V?	Go to Step 4.	“RED” wire circuit shorted to power circuit.
4	Check CAN communication circuit for ground short. 1) Turn ignition switch to OFF position. 2) Measure resistance between “G91-7” terminal of ECM connector and vehicle body ground. Is it infinite?	Go to Step 5.	“RED” wire circuit shorted to ground.
5	Check CAN communication circuit for open. 1) Turn ignition switch to OFF position. 2) Disconnect connectors from ECM and TCM. 3) Check for proper connection to “G91-8” terminal of ECM connector and “C39-17” terminal of TCM connector. 4) If OK, measure resistance between “G91-8” terminal of ECM connector and “C39-17” terminal of TCM connector Is resistance 1 Ω or less?	Go to Step 6.	“WHT” wire circuit open or high resistance.
6	Check CAN communication circuit for power short. 1) Turn ignition switch to ON position. 2) Measure voltage between “C39-17” terminal of TCM connector and vehicle body ground. Is voltage 0 – 1 V?	Go to Step 7.	“WHT” wire circuit shorted to power circuit.
7	Check CAN communication circuit for ground short. 1) Turn ignition switch to OFF position. 2) Measure resistance between “C39-17” terminal of ECM connector and vehicle body ground. Is it infinite?	Substitute a known-good TCM and recheck. If OK, substitute a known-good ECM and recheck.	“WHT” wire circuit shorted to ground.

DTC P1702 Internal Control Module Memory Check Sum Error

DTC Detecting Condition and Trouble Area

DTC DETECTING CONDITION	TROUBLE AREA
Calculation of current data stored in TCM is not correct comparing with pre-stored checking data in TCM.	TCM

DTC Confirmation Procedure

1) Connect scan tool to DLC with ignition switch OFF.
2) Clear DTC in TCM memory.
3) After 10 seconds passed from turning ignition switch ON, check DTC.

Troubleshooting

Step	Action	Yes	No
1	Is DTC P1702 detected after performing “DTC Confirmation Procedure”?	Faulty TCM. Replace TCM.	Could be a temporary malfunction of TCM.

DTC P1703 CAN Invalid Data-TCM

DTC Detecting Condition and Trouble Area

When abnormality either on the gear shift control signal from ECM is detected by TCM, TCM sets DTC P1703.

DTC Troubleshooting

Step	Action	Yes	No
1	Was “Automatic Transaxle Diagnostic Flow Table” performed?	Go to Step 2.	Go to “Automatic Transaxle Diagnostic Flow Table” in this section.
2	DTC check. Check DTC of ECM referring to “DTC Check” in section 6. Is there any DTC (s)?	Go to applicable DTC diag. flow.	Substitute a known-good TCM and recheck. If OK, substitute a known-good ECM and recheck.

DTC P2769 Torque Converter Clutch (TCC) Circuit Low

Wiring Diagram

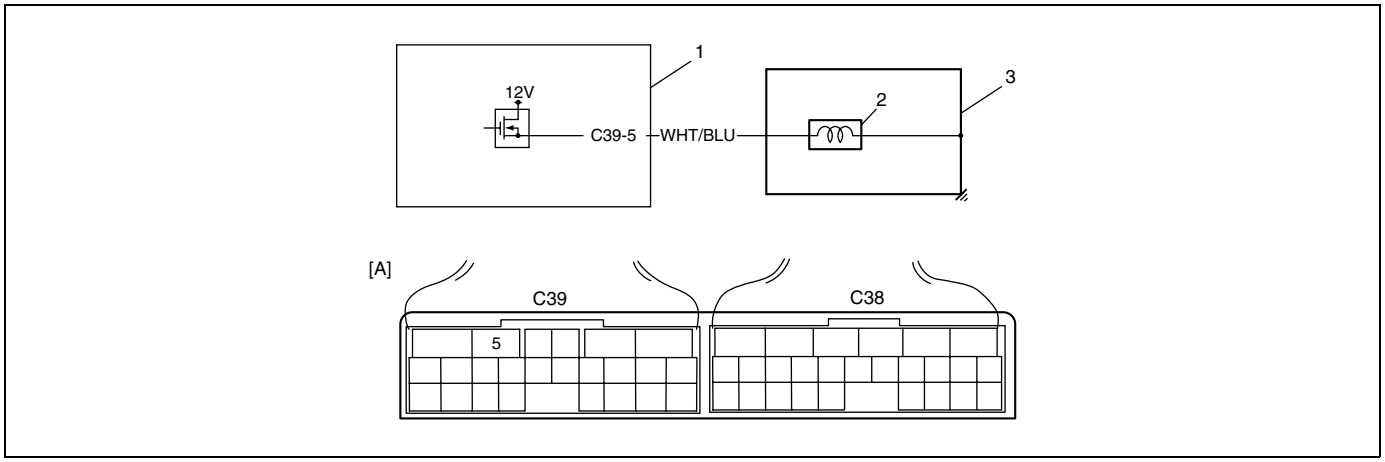

1. TCC solenoid valve	2. TCM	3. A/T	[A]: Terminal arrangement of TCM connector (Viewed from harness side)

DTC Detecting Condition and Trouble Area

DTC DETECTING CONDITION	TROUBLE AREA
Voltage of TCC solenoid valve TCM terminal is low although TCM is commanding TCC solenoid to turn ON	• TCC solenoid valve circuit shorted to ground. • Malfunction of TCC solenoid valve • TCM

DTC Confirmation Procedure

WARNING:

- **When performing a road test, select a place where there is no traffic or possibility of a traffic accident and be very careful during testing to avoid occurrence of an accident.**
- **Road test should be carried out with 2 persons, a driver and tester, on a level road.**

1) Connect scan tool to DLC with ignition switch OFF, if available.
2) Clear DTCs in TCM memory.
3) Start engine.
4) Keep engine running at idle speed in “P” range for 20 seconds or more.
5) Check DTC.

DTC Troubleshooting

Step	Action	Yes	No
1	Was “Automatic Transaxle Diagnostic Flow Table” performed?	Go to Step 2.	Go to “Automatic Transaxle Diagnostic Flow Table” in this section.
2	Check TCC solenoid valve resistance 1) Turn ignition switch OFF 2) Disconnect valve body harness connector on automatic transmission. 3) Check for proper connection to solenoid at “WHT/BLU” circuit. 4) Check resistance of solenoid valve. See Fig. Resistance between TCC solenoid valve terminals of transmission side valve body harness connector: 11 – 15 Ω at 20°C (68°F) Resistance between TCC solenoid valve terminals of transmission side valve body harness connector and transmission body: Infinity Is check results satisfactory?	Go to Step 3.	Replace TCC solenoid valve or lead wire.
3	Check TCC solenoid valve circuit for ground short 1) Disconnect TCM connectors. 2) Check for proper connection to TCM at terminals “C39-5”. 3) If connection is OK, check continuity between terminal “C39-5” of disconnected harness side TCM connector and ground. Is continuity indicated?	“WHT/BLU” circuit shorted to ground.	Intermittent trouble or faulty TCM. Check for intermittent referring to “Intermittent and Poor Connection” in Section 0A. If OK, substitute a known-good TCM and recheck.

Fig. for Step 3.

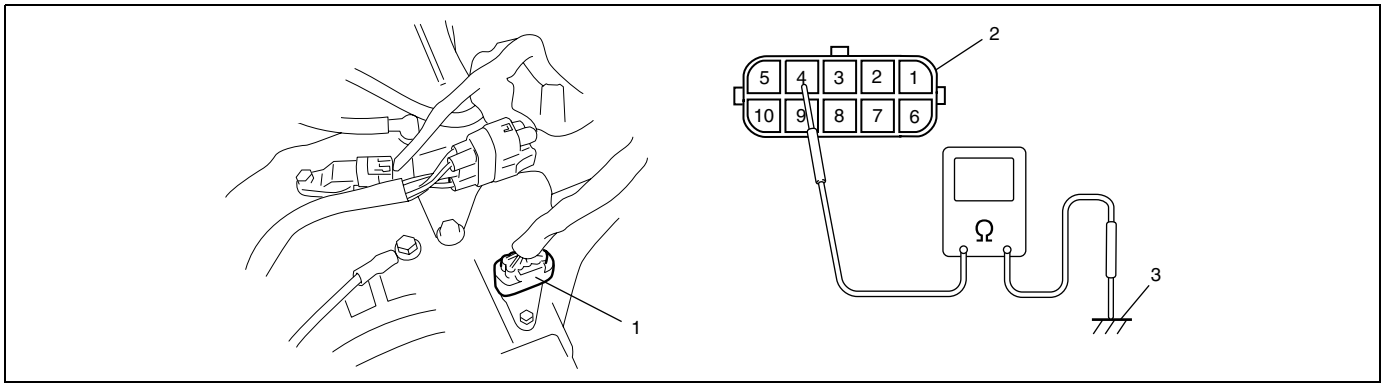

1.	Valve body harness connector on harness
2.	Valve body harness connector on transaxle
3.	Ground (transaxle)

DTC P2770 Torque Converter Clutch (TCC) Circuit High

Wiring Diagram

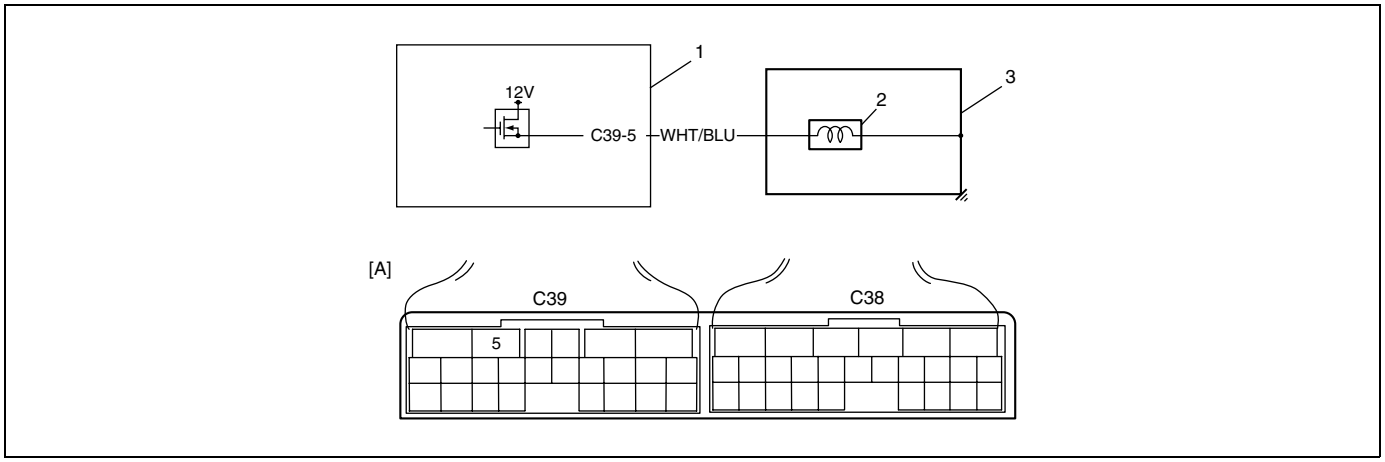

1. TCC solenoid valve	2. TCM	3. A/T	[A]: Terminal arrangement of TCM connector (Viewed from harness side)

DTC Detecting Condition and Trouble Area

DTC DETECTING CONDITION	TROUBLE AREA
Voltage of TCC solenoid valve TCM terminal is high although TCM is commanding TCC solenoid to turn OFF	• TCC solenoid valve circuit shorted to ground. • Malfunction of TCC solenoid valve • TCM

DTC Confirmation Procedure

WARNING:

- **When performing a road test, select a place where there is no traffic or possibility of a traffic accident and be very careful during testing to avoid occurrence of an accident.**
- **Road test should be carried out with 2 persons, a driver and tester, on a level road.**

1) Connect scan tool to DLC with ignition switch OFF, if available.
2) Clear DTCs in TCM memory.
3) Start engine.
4) Keep engine running at idle speed in “P” range for 10 seconds or more.
5) Check DTC.

DTC Troubleshooting

Step	Action	Yes	No
1	Was “Automatic Transaxle Diagnostic Flow Table” performed?	Go to Step 2.	Go to “Automatic Transaxle Diagnostic Flow Table” in this section.
2	Check TCC solenoid valve circuit for IG short 1) Connect valve body harness connector. 2) Disconnect TCM connectors. 3) Check for proper connection to TCM at terminal “C39-5”. 4) If connection is OK, turn ignition switch ON and measure voltage between terminal “G08-23”of disconnected harness side TCM connector and ground. Is it 0 – 2 V?	Go to Step3.	“WHT/BLU” circuit shorted to power circuit.
3	Check TCC solenoid valve resistance 1) Turn ignition switch OFF 2) Disconnect valve body harness connector on automatic transmission. 3) Check for proper connection to solenoid at “WHT/BLU” circuit. 4) Check resistance of solenoid valve. See Fig. Resistance between TCC solenoid valve terminals of transmission side valve body harness connector: 11 – 15 Ω at 20°C (68°F) Resistance between TCC solenoid valve terminals of transmission side valve body harness connector and transmission body: Infinity Is check results satisfactory?	Intermittent trouble or faulty TCM. Check for intermittent referring to “Intermittent and Poor Connection” in Section 0A. If OK, substitute a known-good TCM and recheck.	Replace TCC solenoid valve or lead wire.

Fig. for Step 3.

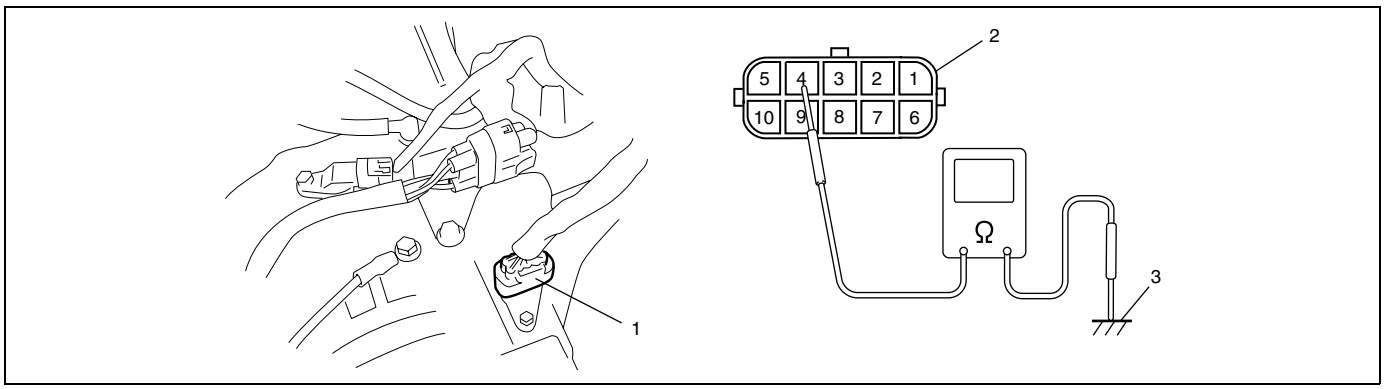

1.	Valve body harness connector on harness
2.	Valve body harness connector on transaxle
3.	Ground (transaxle)

Scan Tool Data

As the data values given below are standard values estimated on the basis of values obtained from the normally operating vehicles by using a scan tool, use them as reference values. Even when the vehicle is in good condition, there may be cases where the checked value does not fall within each specified data range. Therefore, judgment as abnormal should not be made by checking with these data alone.
Also, condition in the below table that can be checked by the scan tool are those detected by TCM and output from TCM as commands and there may be cases where the automatic transaxle or actuator is not operating (in the condition) as indicated by the scan tool.

NOTE:

The following scan tool data related to automatic transaxle can be checked only by communicating with TCM.

SCAN TOOL DATA	VEHICLE CONDITION		NORMAL CONDITION/REFERENCE VALUES
GEAR POSITION	Ignition switch ON	Selector lever is in “P” position	P or N
		Selector lever is in “R” position	R
		Selector lever is in “N” position	P or N
		Selector lever is in “D” position	1
		Selector lever is in “2” position	1
		Selector lever is in “L” position	1
ENGINE SPEED	At engine idle speed		Engine idle speed is displayed
INPUT SHAFT REVOLUTION	Ignition switch ON and engine stop		0 RPM
	At 60 km/h (37.5 mile/h) constant speed, O/D off switch ON, 20% or less throttle opening and 3rd gear (“D” range)		2300 RPM (displayed in increments of 50 rpm)
OUTPUT SHAFT REVOLUTION	At vehicle stop		0 RPM
	At 60 km/h (37.5 mile/h) constant speed, O/D off switch ON, 20% or less throttle opening and 3rd gear		2300 RPM (displayed in increments of 50 rpm)
BATTERY VOLTAGE	Ignition switch ON and engine stop		Battery voltage is displayed (8 – 16 V)
ATF TEMPERATURE	After driving at 60 km/h (37.5 mile/h) for 15 minutes or more, and A/T fluid temperature around sensor reaches 70 – 80°C (158 – 176°F)		70 – 80°C, 158 – 176°F
SHIFT SOLENOID-A COMMAND	At vehicle stop		ON
	At 60 km/h (37.5 mile/h) constant speed, O/D off switch ON, 20% or less throttle opening and 3rd gear		OFF
SHIFT SOLENOID-A MONITOR	At vehicle stop		ON
	At 60 km/h (37.5 mile/h) constant speed, O/D off switch ON, 20% or less throttle opening and 3rd gear		OFF
SHIFT SOLENOID-B COMMAND	At vehicle stop		ON
	At 60 km/h (37.5 mile/h) constant speed, O/D off switch ON, 20% or less throttle opening and 3rd gear		OFF
SHIFT SOLENOID-B MONITOR	At vehicle stop		ON
	At 60 km/h (37.5 mile/h) constant speed, O/D off switch ON, 20% or less throttle opening and 3rd gear		OFF
TIMING SOLENOID COMMAND	Ignition switch ON and selector lever is in “N” range		OFF
	For about 0.5 sec. while on gear shifting between 3rd and 4th or gear shifting N to D		ON

SCAN TOOL DATA	VEHICLE CONDITION		NORMAL CONDITION/REFERENCE VALUES
TIMING SOLENOID MONITOR	Ignition switch ON and selector lever is in “N” range		OFF
	For about 0.5 sec. while on gear shifting between 3rd and 4th or gear shifting N to D		ON
TCC SOLENOID COMMAND	At 5 km/h (3 mile/h) constant speed, O/D off switch ON, closed throttle and 1st gear		OFF
	At 100 km/h (62.5 mile/h) constant speed, O/D off switch OFF, 20% or less throttle opening and 4th gear		ON
TCC SOLENOID COMMAND	At 5 km/h (3 mile/h) constant speed, O/D off switch ON, closed throttle and 1st gear		OFF
	At 100 km/h (62.5 mile/h) constant speed, O/D off switch OFF, 20% or less throttle opening and 4th gear		ON
PRESSURE CONTROL SOLENOID	At vehicle stop, closed throttle, engine idle speed and 1st gear		0%
VEHICLE SPEED	At vehicle stop		0 KPH, 0 MPH
O/D OFF SWITCH	Ignition switch ON	O/D off switch OFF	OFF
		O/D off switch ON	ON
TRANSAXLE	Ignition switch ON	Selector lever is in “P” position	P
		Selector lever is in “R” position	R
		Selector lever is in “N” position	N
		Selector lever is in “D” position	D
		Selector lever is in “2” position	2
		Selector lever is in “L” position	L
D RANGE SIGNAL	Ignition switch ON	Selector lever is in “P” position	OFF
		Selector lever is in “R” position	ON
		Selector lever is in “N” position	OFF
		Selector lever is in “D” position	ON
		Selector lever is in “2” position	ON
		Selector lever is in “L” position	ON
THROTTLE POSITOIN	Ignition switch ON	Accelerator pedal is released	0%
		Accelerator pedal is depressed	0 – 100% (Varies depending on depressed value)
BRAKE SWITCH	Ignition switch ON	Brake pedal is depressed	ON
		Brake pedal is released	OFF
TORQUE REDUCTION SIGNAL	While on gear upshifting with 25% or more throttle opening		ON
	Under condition of not shifting gear		OFF
ENGINE COOLANT TEMPERATURE	Ignition switch ON		Engine coolant temperature is displayed
AIR CONDITIONER SIGNAL	Ignition switch ON and air conditioner switch OFF		OFF
ENGINE TORQUE SIGNAL	Ignition switch ON and engine stop		0 N·m

SCAN TOOL DATA DEFINITIONS:

GEAR POSITION
Current gear position computed by throttle position coming from ECM and vehicle speed.

ENGINE SPEED (RPM)
Engine speed computed by reference pulses from crankshaft position sensor.

INPUT SHAFT REVOLUTION (RPM)
Input shaft revolution computed by reference pulses coming from input shaft speed sensor on transaxle case.

OUTPUT SHAFT REVOLUTION (RPM)
Output shaft revolution computed by reference pulses coming from output shaft speed sensor (VSS) on transaxle case.

BATTERY VOLTAGE (V)
Battery voltage read by TCM as analog input signal by TCM.

ATF TEMPERATURE (°C, °F)
ATF temperature decided by signal from transmission fluid temperature sensor installed on valve body.

SHIFT SOLENOID-A COMMAND
ON: ON command being outputted to shift solenoid valve-A (No.1)
OFF: ON command not being outputted to shift solenoid valve-A (No.1)

SHIFT SOLENOID-A MONITOR
ON: Electricity being passed to shift solenoid valve-A (No.1)
OFF: Electricity not being passed to shift solenoid valve-A (No.1)

SHIFT SOLENOID-B COMMAND
ON: On command being outputted to shift solenoid valve-B (No.2)
OFF: ON command not being outputted to shift solenoid valve-B (No.2)

SHIFT SOLENOID-B MONITOR
ON: Electricity being passed to shift solenoid valve-B (No.2)
OFF: Electricity not being passed to shift solenoid valve-B (No.2)

TIMING SOLENOID COMMAND
ON: ON command being outputted to timing solenoid valve
OFF: ON command not being outputted to timing solenoid valve

TIMING SOLENOID MONITOR
ON: Electricity being passed to timing solenoid valve
OFF: Electricity not being passed to timing solenoid valve

TCC SOLENOID COMMAND
ON: ON command being outputted to TCC solenoid valve
OFF: ON command not being outputted to TCC shift solenoid valve

TCC SOLENOID MONITOR
ON: Electricity being passed to TCC solenoid valve
OFF: Electricity not being passed to TCC solenoid valve

PRESSURE CONTROL SOLENOID (%)
Electric current value ratio between electric current value being outputted from TCM to solenoid and maximum value can be outputted by TCM.

VEHICLE SPEED (KPH/MPH)
Vehicle speed computed by reference pulse signals coming from vehicle speed sensor on transaxle case.

O/D OFF SWITCH
Inputted signal from O/D off switch on selector knob.
ON: O/D off switch ON
OFF: O/D off switch OFF

TRANSAXLE RANGE
Transaxle range detected by signal fed from transmission range sensor.

D RANGE SIGNAL
ON: Signal which TCM require ECM to increase idle speed
OFF: Signal which TCM does not require ECM to increase idle speed

THROTTLE POSITION (%)
Throttle opening ratio computed by duty pulse signal from ECM.

BRAKE SWITCH
Inputted signal from brake light switch on pedal bracket.
ON: Brake pedal depressed
OFF: Brake pedal released

TORQUE REDUCTION SIGNAL
ON: Signal which TCM require ECM to reduce output torque at shifting gear
OFF: Signal which TCM does not require ECM to reduce output torque

ENGINE COOLANT TEMPERATURE (°C, °F)
Engine coolant temperature computed by duty pulse signal from ECM.

AIR CONDITIONER SIGNAL
ON: Signal which inform that air conditioner compressor is turned ON.
OFF: Signal which inform that air conditioner compressor is not turned ON.

ENGINE TORQUE SIGNAL (N·m)
Engine torque computed by duty pulse signal outputted from ECM.

Inspection of TCM and Its Circuits

TCM and its circuits can be checked at TCM wiring connectors by measuring voltage and resistance.

CAUTION:

TCM cannot be checked by itself, it is strictly prohibited to connect voltmeter or ohmmeter to TCM with connector disconnected from it.

INSPECTION

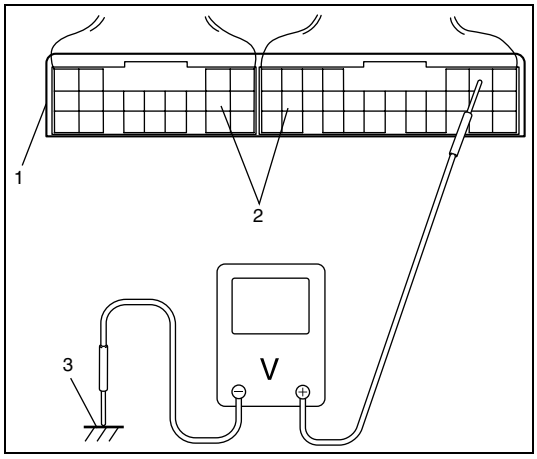

1) Remove TCM (1) from vehicle referring to “Transmission Control Module (TCM)” in this section.
2) Connect TCM connectors (2) to TCM.
3) Check voltage at each terminal of connectors connected.

NOTE:

As each terminal voltage is affected by battery voltage, confirm that it is 11 V or more when ignition switch is ON.

3. Body ground

Terminal Arrangement of TCM Coupler (Viewed From Harness Side)

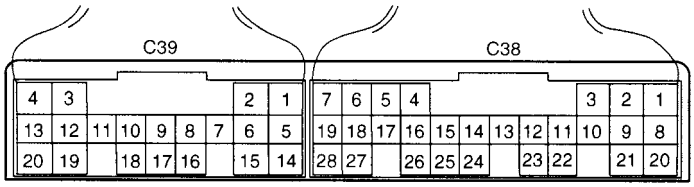

Connector	Terminal number	Wire color	Circuit	Normal Voltage	Condition
C38	1	RED	Transmission range sensor (“R” range)	8 – 14 V	Ignition switch ON, selector lever at “R” range
				0 – 1 V	Ignition switch ON, selector lever at other than “R” range
	2	–	–	–	–
	3	–	–	–	–
	4	–	–	–	–
	5	–	–	–	–

Connector	Terminal number	Wire color	Circuit	Normal Voltage	Condition
C38	6	WHT	Input shaft speed sensor (+)	2 – 3 V	Ignition switch turned ON, engine stops.
				(1. Reference waveform No.1)	While engine running. (Output signal is waveform. Waveform frequency varies depending on output shaft speed. (16 pulses are generated par 1 input shaft revolution.))
	7	GRN	Transmission range sensor (“D” range)	8 – 14 V	Ignition switch ON, selector lever at “R” range
				0 – 1 V	Ignition switch ON, selector lever at other than “R” range
	8	GRN/ORN	Transmission range sensor (“N” range)	8 – 14 V	Ignition switch ON, selector lever at “N” range
				0 – 1 V	Ignition switch ON, selector lever at other than “N” range
	9	BLU/RED	O/D OFF switch	0 – 1 V	O/D OFF switch pressed
				8 – 14 V	O/D OFF switch released
	10	–	–	–	–
	11	RED/BLK	“O/D OFF” light	0 – 1 V	Ignition switch ON (lamp turned ON)
				8 – 14 V	Ignition switch ON (lamp turned OFF)
	12	–	–	–	–
	13	–	–	–	–
	14	–	–	–	–
	15	–	–	–	–
	16	BLK	Input shaft speed sensor (–)	2 – 3 V	Ignition switch ON, engine at stop
	17	–	–	–	–
	18	BLU/WHT	Transmission range sensor (“L” range)	8 – 14 V	Ignition switch ON, selector lever at “L” range
				0 – 1 V	Ignition switch ON, selector lever at other than “L” range
	19	GRN/YEL	Transmission range sensor (“2” range)	8 – 14 V	Ignition switch ON, selector lever at “2” range
				0 – 1 V	Ignition switch ON, selector lever at other than “2” range
	20	ORN	Transmission range sensor (“P” range)	8 – 14 V	Ignition switch ON, selector lever at “P” range
				0 – 1 V	Ignition switch ON, selector lever at other than “P” range
	21	–	–	–	–
	22	–	–	–	–
	23	BLU	Data link connector	8 – 14 V	Ignition switch ON
	24	–	–	–	–
	25	YEL	Output shaft speed sensor (VSS)	8 – 14 V	Ignition switch ON
				0 – 1 V ↑↓ 10 – 14 V (2. Reference waveform No.2)	Vehicle running. (Sensor signal is pulse. Pulse frequency varies depending on vehicle speed. (8190 pulses are generated par 60 km/h, 37.5 ml/h)
	26	–	–	–	–

Con-nector	Terminal number	Wire color	Circuit	Normal Voltage	Condition
C39	1	BLK	Ground	0 – 1 V	Ignition switch ON
	2	LT GRN	Pressure control solenoid valve (–)	0.6 – 1.0 V	Ignition switch ON
	3	–	–	–	–
	4	BRN/YEL	Pressure control solenoid valve (+)	0 – 0.6 V ↑↓ 10 – 14 V (3. Reference waveform No.3)	Engine running at idling. (Output signal is duty pulse. Duty ratio varies depending on throttle valve opening.)
	5	WHT/BLU	TCC solenoid valve	0 – 1 V	Engine running at idling speed.
	6	YEL/BLK	Power source	10 – 14V	Ignition switch ON
	7	WHT	CAN communication line (Low)	2.5 – 3.6 V ↑↓ 1.6 – 2.5 V (4. Reference waveform No.4)	Engine running at idling with after warming up. (CAN communication signal is pulse. Pulse signal frequency varies depending on engine condition.)
	8	–	–	–	–
	9	–	–	–	–
	10	–	–	–	–
	11	BLU/RED	Transmission fluid temperature sensor (+)	2.9 – 3.1 V	Ignition switch ON, fluid temperature is 20°C (68°F)
				0.3 – 0.5 V	Ignition switch ON, fluid temperature is 100°C (212°F)
	12	GRY/RED	Transmission fluid temperature sensor (–)	0 – 1 V	Ignition switch ON
	13	–	–	–	–
	14	WHT/GRN	Timing solenoid valve	0 – 1 V	Ignition switch ON
	15	BLK/YEL	Shift solenoid valve-B (No.2)	9 – 14 V	Ignition switch ON, select lever in “P” range
	16	BRN	Shift solenoid valve-A (No.1)	9 – 14 V	Ignition switch ON, select lever in “P” range
	17	RED	CAN communication line (High)	2.5 – 3.6 V ↑↓ 1.6 – 2.5 V (4. Reference waveform No.4)	Engine running at idling with after warming up. (CAN communication signal is pulse. Pulse signal frequency varies depending on engine condition.)
	18	–	–	–	–
	19	–	–	–	–
	20	–	–	–	–
	21	–	–	–	–
	22	–	–	–	–
	23	BLK	Ground	0 – 1 V	Ignition switch ON
	24	WHT/RED	Power source for back-up	10 – 14 V	Constantly

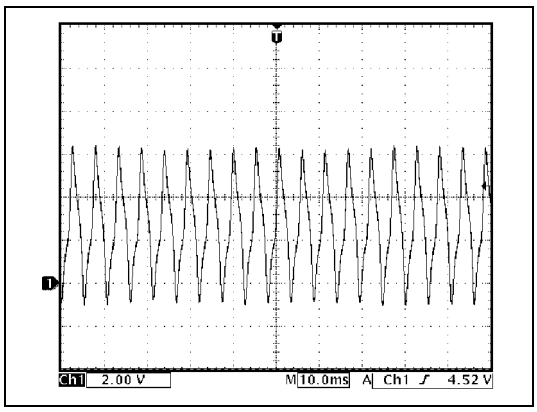

1. Reference waveform No.1

Input shaft speed sensor signal at engine idling.

Measurement terminal	CH1: C38-6 to C39-1
Oscilloscope setting	CH1: 2 V/DIV TIME: 10 ms/DIV
Measurement condition	• After warmed up to normal operating temperature • Engine at specified idle speed with “P” range.

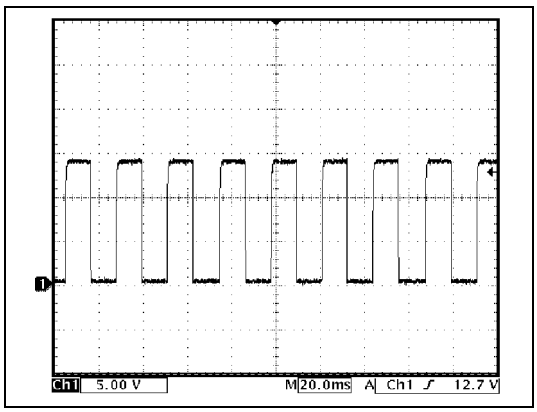

2. Reference waveform No.2

Output shaft speed sensor (VSS) signal at vehicle speed 60 km/h (37 mile/h).

Measurement terminal	CH1: C38-25 to C39-1
Oscilloscope setting	CH1: 5 V/DIV TIME: 2 ms/DIV
Measurement condition	• After warmed up to normal operating temperature • Drive vehicle at 60 km/h (37 mile/h).

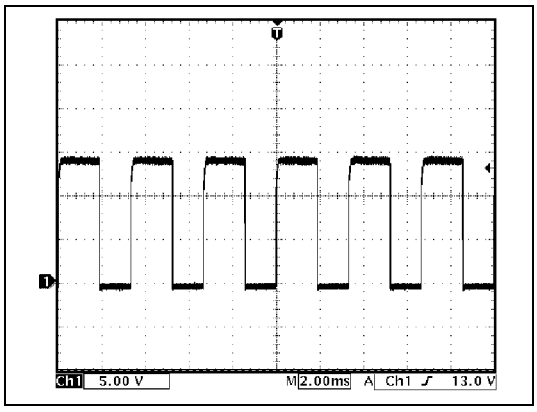

3. Reference waveform No.3

Pressure control solenoid valve signal at engine idling.

Measurement terminal	CH1: C39-4 to C39-1
Oscilloscope setting	CH1: 5 V/DIV TIME: 20 ms/DIV
Measurement condition	• After warmed up to normal operating temperature • Engine at specified idle speed with “P” range.

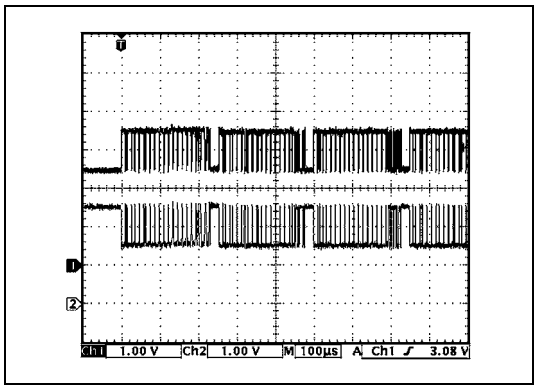

4. Reference waveform No.4

CAN communication line (High & Low) signal at engine idling

Measurement terminal	CH1: C39-7 to C39-1 CH2: C39-17 to C39-1
Oscilloscope setting	CH1: 1 V/DIV TIME: 100 µs/DIV
Measurement condition	• After warmed up to normal operating temperature • Engine at specified idle speed with “P” range.

On-Vehicle Service

Maintenance Service

Fluid level check at normal operating (hot) temperature (Hot check)

Inspection

1) Stop vehicle and place it level.
2) Apply parking brake and place chocks against wheels.
3) With selector at P position, start engine.
4) Warm up engine till fluid temperature reaches normal operating temperature (70 – 80°C/158 – 176°F). As a guide to check fluid temperature, warm up engine to normal operating.

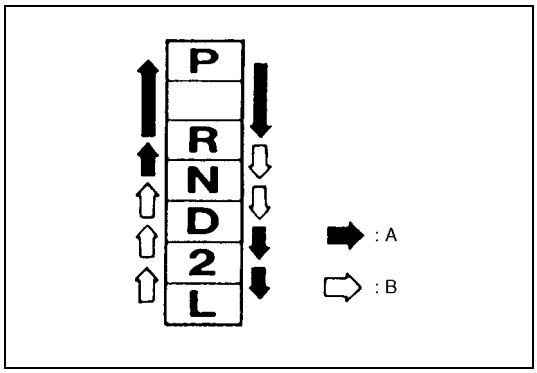

5) Keep engine idling and shift selector slowly to “L” and back to “P” position.
6) With engine idling, pull out fluid level gauge, wipe it off with a clean cloth and put it back into place.

A. Shift the select lever with its button pushed in.
B. Shift the select lever without pushing its button.

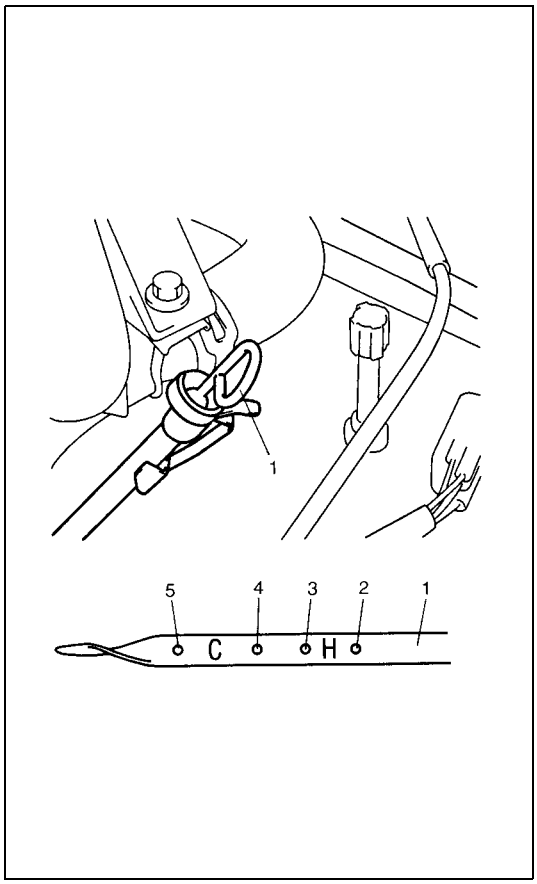

7) Pull out fluid level gauge (1) again and check fluid level indicated on it. The lowest fluid level should be between FULL HOT and LOW HOT. If it is below LOW HOT, add an equivalent of DEXRON®-III up to FULL HOT.

Automatic transaxle fluid

An equivalent of DEXRON®-III

NOTE:

- **Do not race engine while checking fluid level, even after the engine start.**
- **Do not overfill. Overfilling can cause foaming and loss of fluid through breather. Then slippage and transaxle failure can result.**
- **Bringing the level from LOW HOT to FULL HOT requires 0.4 liters (0.85/0.70 US/Imp. pt).**
- **If vehicle was driven under high load such as pulling a trailer, fluid level should be checked about half an hour after it is stopped.**

2. “FULL HOT” mark
3. “LOW HOT” mark
4. “FULL COLD” mark
5. “LOW COLD” mark

Fluid level check at room (cold) temperature (Cold check)

Inspection

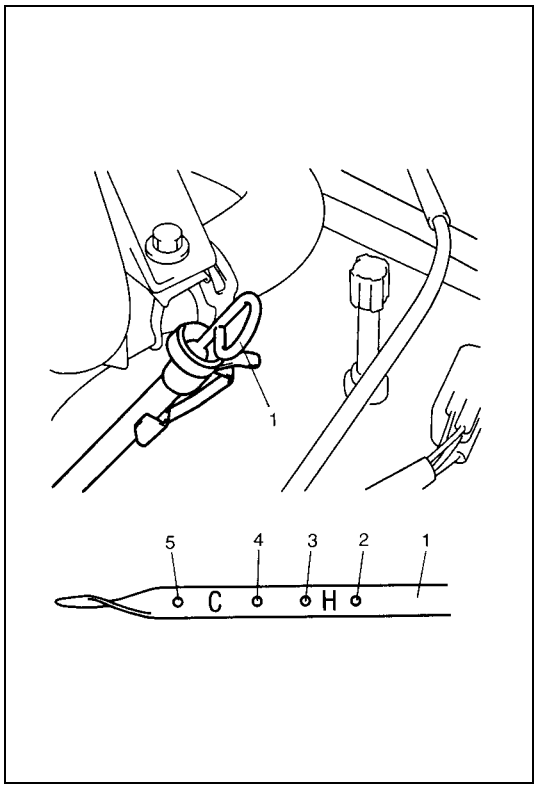

Fluid level can be checked temporarily at room (cold) temperature which correspond to 20 – 30°C (68 – 86°F). This level check is considered to be preparation before performing level check under normal operating (hot) temperature. Checking procedure itself is the same as that described in “Fluid Level Check at Normal Operating (Hot) Temperature (Hot Check)”. If fluid level is between FULL COLD and LOW COLD, proceed to test drive. And when fluid temperature has reached normal operating (hot) temperature, check fluid level again and adjust it as necessary.

CAUTION:
Fluid level check at room (cold) temperature is recommended only for preparation of level check under normal (hot) operating condition.
Failure to perform fluid level check under normal (hot) operating temperature may result in damage to transaxle.

1. Fluid level gauge
2. “FULL HOT” mark
3. “LOW HOT” mark
4. “FULL COLD” mark
5. “LOW COLD” mark

Fluid change

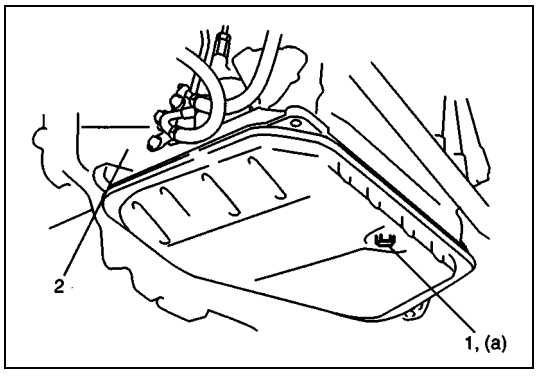

1) Lift up vehicle.
2) When engine is cool, remove drain plug (1) from transaxle housing (2) and drain A/T fluid.
3) Install drain plug (1).

Tightening torque
A/T fluid drain plug (a): 17 N·m (1.7 kg-m, 12.5 lb-ft)

4) Lower vehicle and fill proper amount of an equivalent of DEXRON®-III.

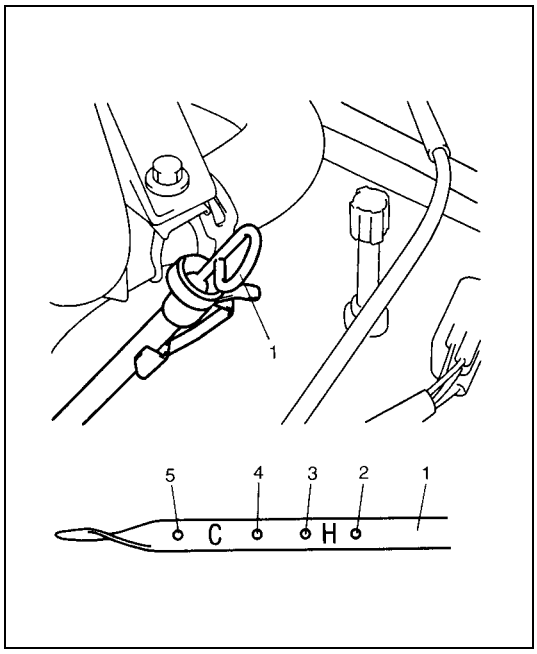

5) Check fluid level referring to “Fluid level check at room (cold) temperature (Cold check)” and “Fluid level check at normal operating (hot) temperature (Hot check)” in this section.

Automatic transaxle fluid

An equivalent of DEXRON®-III

Automatic transaxle fluid capacity
When draining from drain plug hole:
3.3 liters (6.97/5.81 US/Imp. pt.)
When overhauling:
5.6 liters (11.83/9.86 US/Imp. pt.)

1.	Fluid level gauge
2.	“FULL HOT” mark
3.	“LOW HOT” mark
4.	“FULL COLD” mark
5.	“LOW COLD” mark

A/T fluid cooler hoses

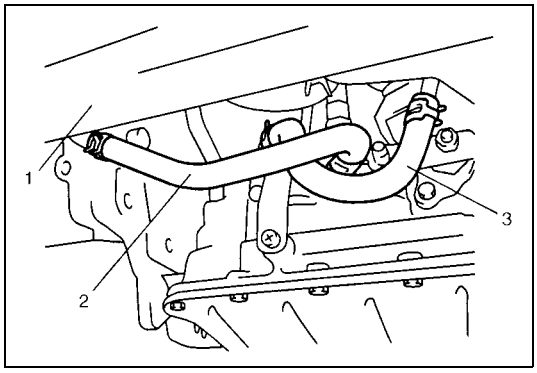

The rubber hoses for the A/T fluid cooler should be replaced at specified interval. When replacing them, be sure to note the following.

- to replace clamps at the same time
- to insert hose as far as its limit mark
- to clamp clamps securely

1.	Radiator
2.	Inlet hose (Outlet from A/T fluid cooler)
3.	Outlet hose (Inlet to A/T fluid cooler)

Selector Lever

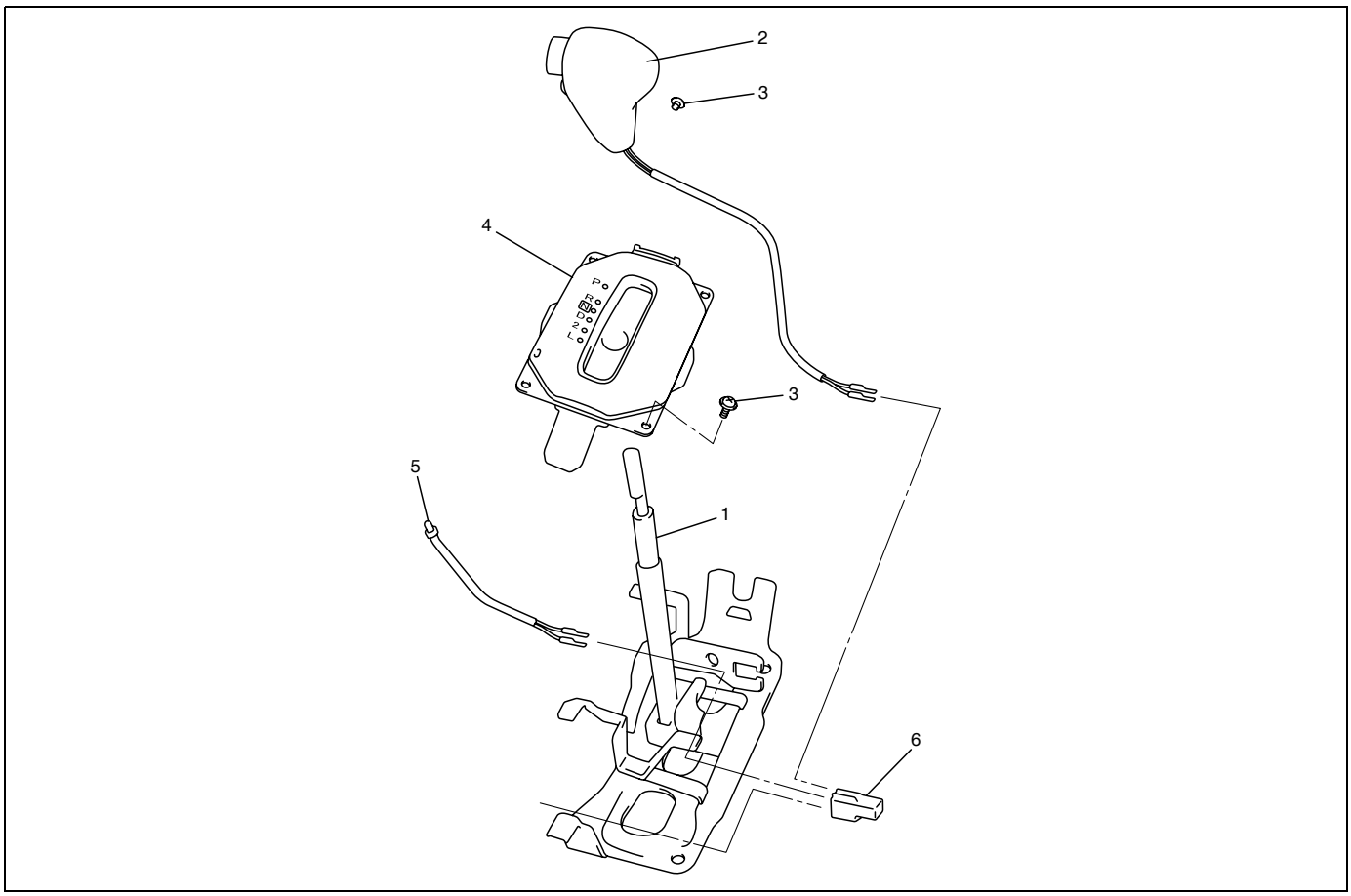

1. Selector lever assembly	4. Indicator assembly
2. Knob assembly	5. Illumination lamp assembly
3. Screw	6. Connector

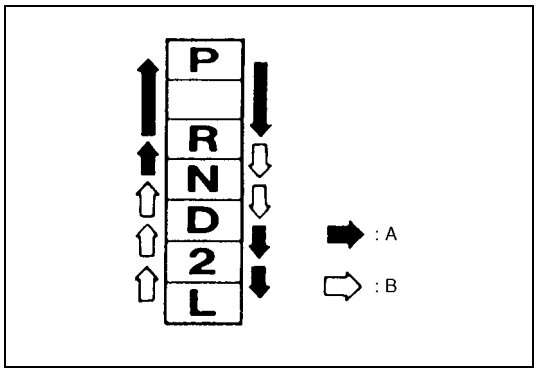

Inspection

Check selector lever for smooth and clear-cut movement and position indicator for correct indication.
For operation of select lever, refer to the figure.

A.	Shift the selector lever with its button pushed in.
B.	Shift the selector lever without pushing its button.

Select Cable

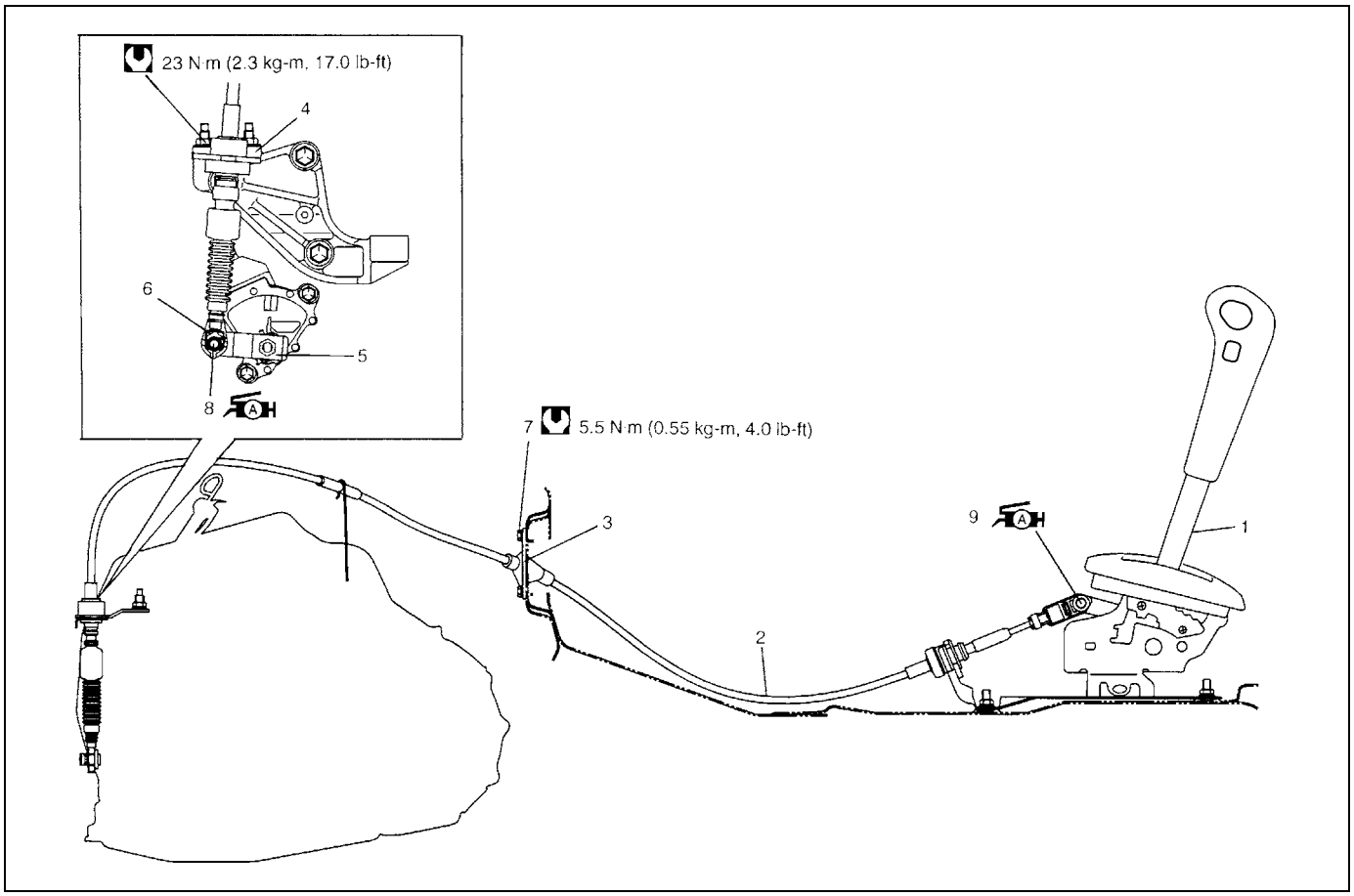

1. Selector lever assembly		6. Clip
2. Select cable		7. Select cable retainer bolt
3. Select cable retainer	A/H	8. Manual select lever pin : Apply lithium grease 99000-25010 to all around pin (0.15 g)
4. Cable bracket	A/H	9. Selector lever pin : Apply lithium grease 99000-25010 to all around pin (0.15 g)
5. Manual select lever		Tightening torque

Removal

1) Remove parking brake lever cover.
2) Remove console box.
3) Disconnect select cable from selector lever and then detach from bracket.
4) Remove clip and disconnect select cable from manual select lever.
5) Remove select cable retainer from dash panel.

Installation

Install select cable by reversing removal procedure.
The important steps in installation are as follows.

- Apply grease to pin and cable joint.
- Tighten bolts in upper figure to specified torque.
- Adjusting procedure is as follows.

Adjustment

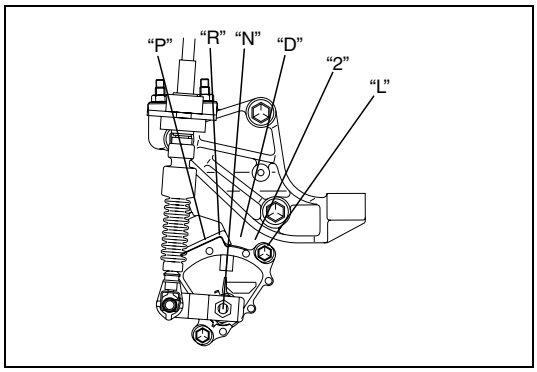

1) Shift manual shift lever to "N" range (transmission range sensor "N" range).

2) Remove adjuster (cable end) from selector lever pin of selector lever assembly.

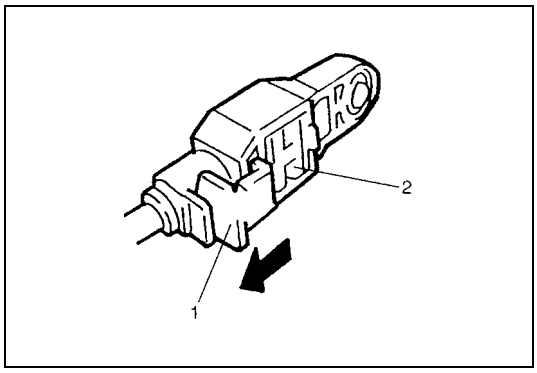

3) Release lock plate (1) which restrict moving of cable end holder (2).

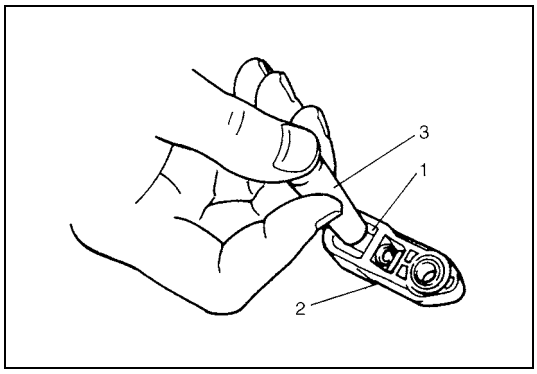

4) Push cable end holder (1) out from eye-end (2) using an appropriate tool (3) to disengage cable.

5) Shift selector lever to "N" position.
6) Apply grease to selector lever pin and install adjuster (cable end) to it.

Grease 99000-25010

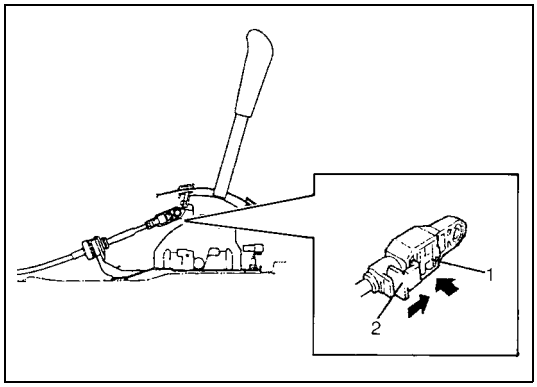

7) With both selector lever and transmission range sensor kept each "N" position, drive cable end holder (1) in until it locks cable.
8) Slide lock plate (2) to secure cable end holder in position.
9) After select cable was installed, check for the following.
   - Push vehicle with selector lever shifted to "P" range. Vehicle should not move.
   - Vehicle can not be driven in "N" range.
   - Vehicle can be driven in "D", "2" and "L" ranges.
   - Vehicle can be backed in "R" range.

Transmission Range Sensor (Shift Switch)

Adjustment and Inspection

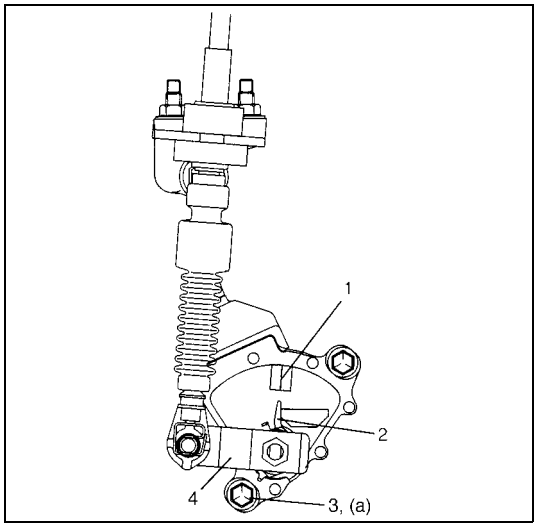

1) Shift manual select lever (4) to “N” range.
2) Check that needle direction shaped on lock washer (2) and “N” reference line (1) on transmission range sensor are aligned. If not, loosen sensor bolts (3) and align them.
3) Check that engine starts in “N” and “P” ranges but it does not start in “D”, “2”, “L” or “R” range. Also, check that back-up lamp lights in “R” range.

Tightening torque
Transmission range sensor bolts
(a): 5.5 N·m (0.55 kg-m, 4.0 lb-ft)

If faulty condition cannot be corrected by adjustment, disconnect transmission range sensor connector and check that continuity exists as shown by moving manual select lever.

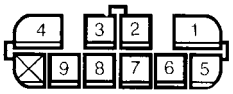

Sensor Position	Terminal No. 1	2	3	4	5	6	7	8	9
P	○			○			○		○
R							○	○	
N	○			○	○		○		
D			○				○		
2						○	○		
L		○					○		

Output Shaft Speed Sensor (VSS)

Inspection

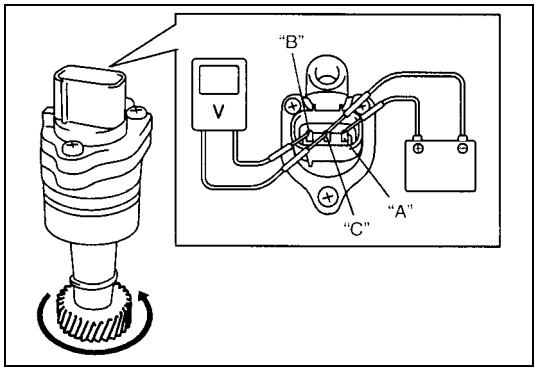

1) Connect positive cable of 12 volt battery to "A" terminal of sensor and ground cable to "C" terminal. Then using voltmeter, check voltage between "B" terminal and "C" terminal with output shaft speed sensor (VSS) driven gear rotated.
   If measured voltage (pulse signal) is not as specified, replace sensor.

Output shaft speed sensor (VSS) output voltage
Pulse signal of alternating 0 – 1 V and 10 – 14 V

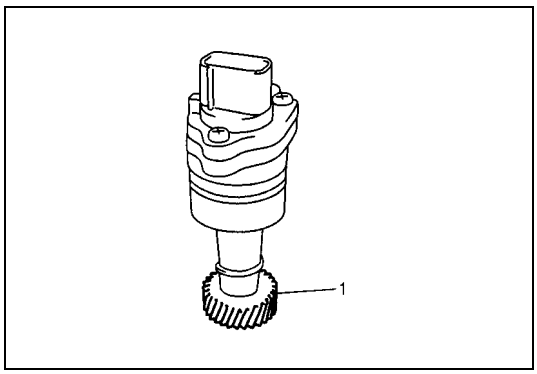

2) Check output shaft speed sensor (VSS) driven gear (1) for wear.
   Replace if necessary.

Removal

1) Disconnect negative cable at battery.

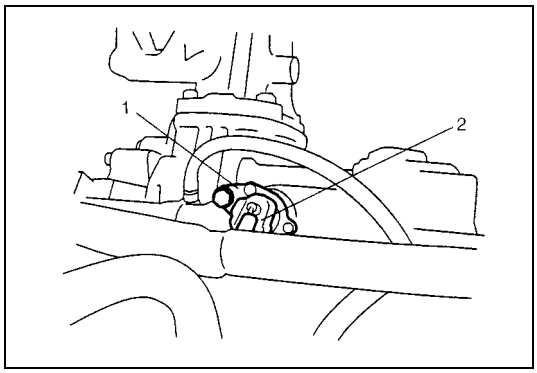

2) Disconnect output shaft speed sensor connector (2).
3) Remove output shaft speed sensor (VSS) (1) by removing its bolt.

Installation

1) Apply A/T fluid to output shaft speed sensor O-ring.

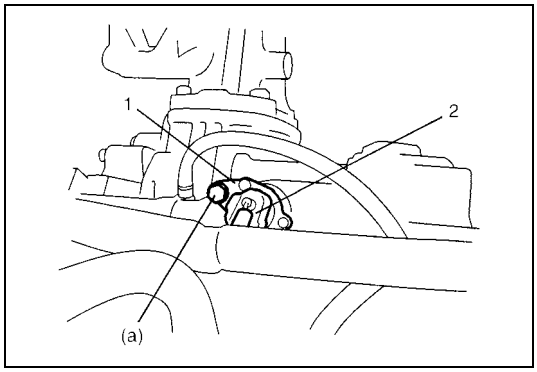

2) Install output shaft speed sensor (VSS) (1) to A/T case and tighten bolt to specified torque.

Tightening torque
Output shaft speed sensor (VSS) bolt
(a): 13 N·m (1.3 kg-m, 9.5 lb-ft)

3) Connect output shaft speed sensor connector (2) to output shaft speed sensor (1).
4) Connect negative cable to battery.

Input Shaft Speed Sensor

Inspection

1) Disconnect negative cable at battery.

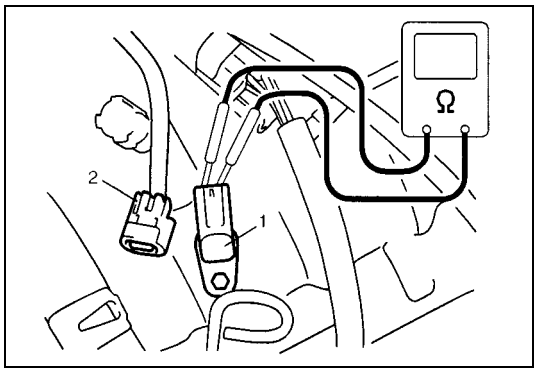

2) Disconnect input shaft speed sensor connector (2).
3) Check resistance between input shaft speed sensor terminals.

Input shaft speed sensor resistance
Standard: 560 – 680 Ω at 20°C (68°F)

1. Input shaft speed sensor

Removal

1) Disconnect negative cable at battery.

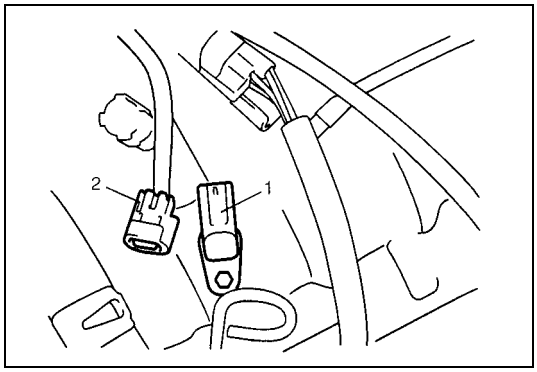

2) Disconnect input shaft speed sensor connector (2).
3) Remove input shaft speed sensor (1) by removing its bolt.

Installation

1) Apply A/T fluid to input shaft speed sensor O-ring.

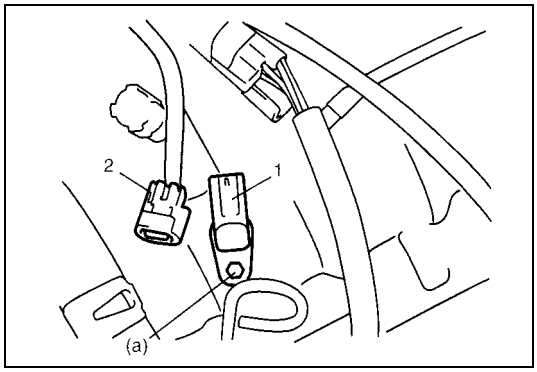

2) Install input shaft speed sensor (1) to A/T case and tighten bolt to specified torque.

Tightening torque
Input shaft speed sensor bolt
(a): 5.5 N·m (0.55 kg-m, 4.0 lb-ft)

3) Connect input shaft speed sensor connector (2) to input shaft speed sensor (1).
4) Connect negative cable to battery.

Throttle Position Sensor

Inspection

Check throttle position sensor referring to “Throttle Position Sensor” in Section 6E1.

Engine Coolant Temperature Sensor

Inspection

Check engine coolant temperature sensor referring to “Engine Coolant Temperature Sensor” in Section 6E1.

O/D Off Switch

Inspection

1) Remove console box.
2) Disconnect O/D off switch connector (1).
3) Check continuity between O/D off switch terminals.

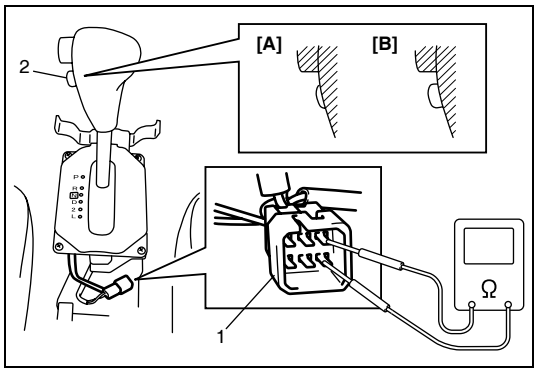

O/D off switch	Pushing	Free
Continuity	Continuity	No continuity

[A]: Pushing position
[B]: Free position

Solenoid Valves (Shift Solenoid Valves, TCC Solenoid Valve and Timing Solenoid Valve)

Removal

1) Disconnect negative cable at battery.
2) Lift up vehicle.
3) Remove drain plug and drain A/T fluid.
4) Install drain plug.

Tightening torque
A/T fluid drain plug: 17 N·m (1.7 kg-m, 12.5 lb-ft)

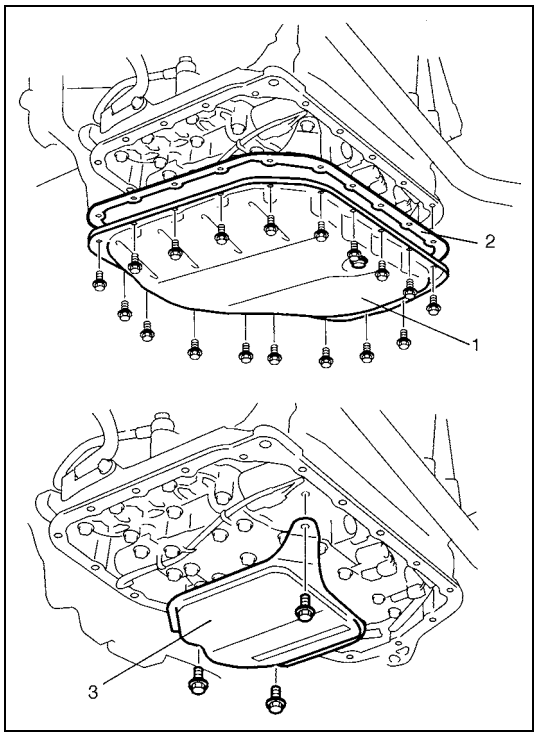

5) Remove A/T oil pan (1) and oil pan gasket (2).
6) Remove oil strainer assembly (3).

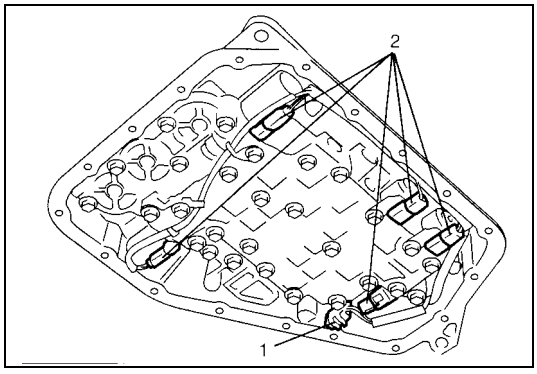

7) Remove transmission fluid temperature sensor (1) from sensor clamp.
8) Disconnect solenoid connectors (2).

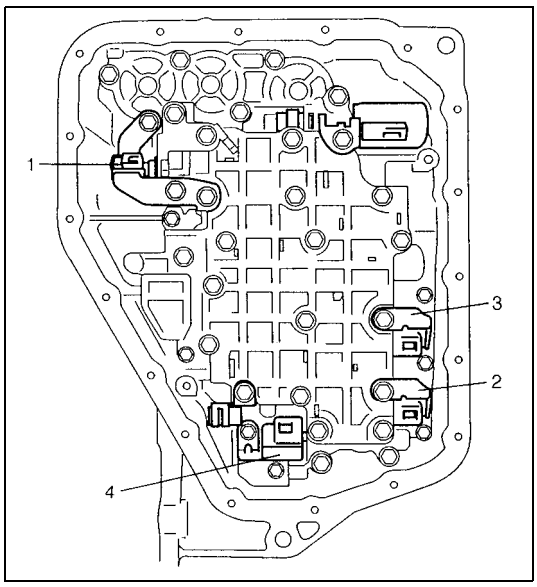

9) Remove TCC solenoid valve (1), shift solenoid valve-A (No.1) (2), shift solenoid valve-B (No.2) (3) and timing solenoid valve (4) by removing bolts.

Inspection

Resistance Check

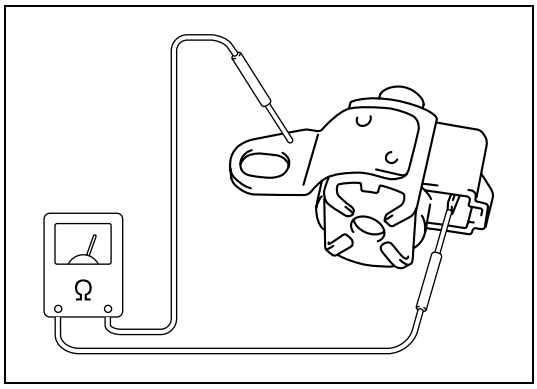

Shift solenoid valves, Timing solenoid valve and TCC solenoid valve resistance
Standard: 11 – 15 Ω at 20°C (68°F)

Operation Check

Shift solenoid valve-A (No.1), -B (No.2) and TCC solenoid valve

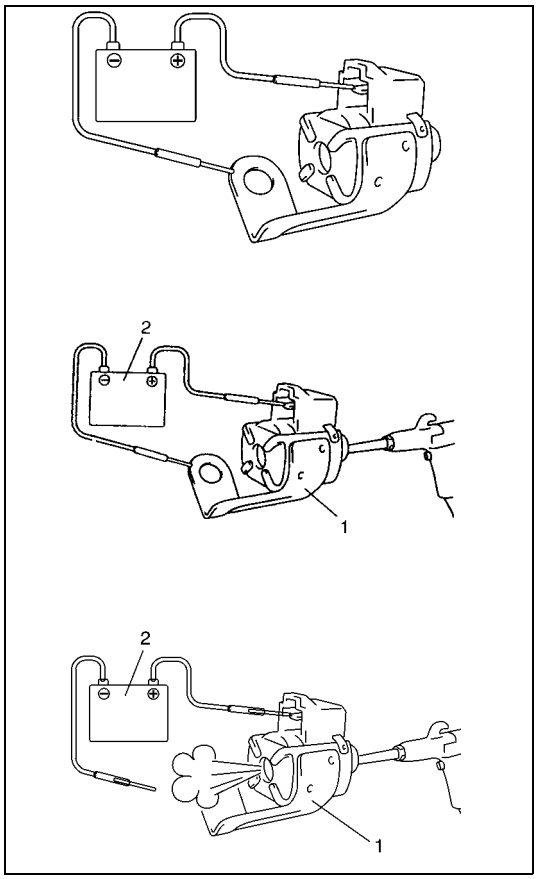

CAUTION:

Do not insert air gun against strainer installed on inlet of solenoid valve too deeply, when blowing air into solenoid valve. If not, the strainer will be damaged.

- Check that solenoid valve (1) actuate with click sound when battery voltage is conducted.
- When solenoid valve (1) is connected to battery (2), confirm that solenoid valve is close condition by blowing air (50 – 200 kPa, 0.5 – 2.0 kg/cm^2, 7 – 28.5 psi) into solenoid valve as shown in the figure.
- When solenoid valve (1) is not connected to battery (2), confirm that solenoid valve is open condition by blowing air (50 – 200 kPa, 0.5 – 2.0 kg/cm^2, 7 – 28.5 psi) into solenoid valve as shown in the figure.

NOTE:

Do not fail to inspect with air to prevent mistaken checking because return spring for valve is not installed into solenoid valve.

Timing solenoid valve

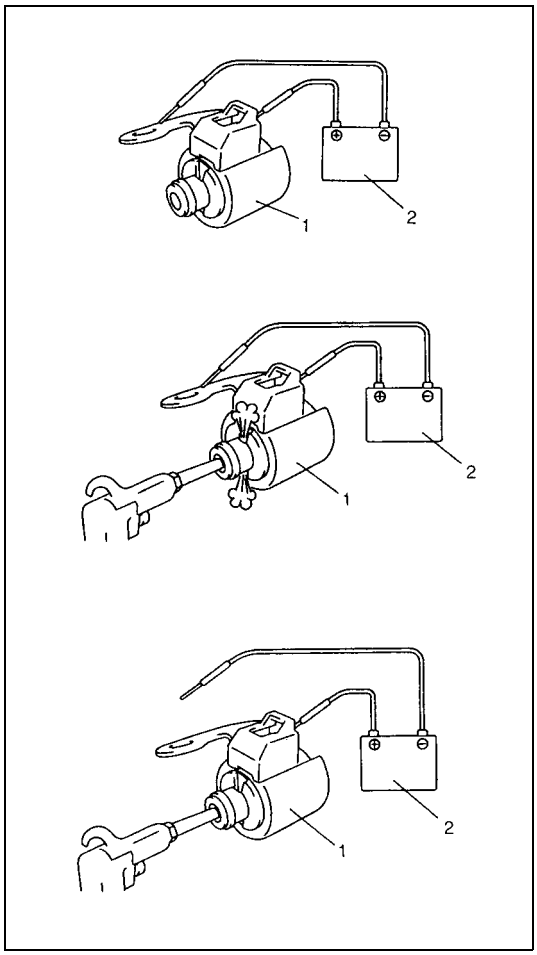

CAUTION:

Do not insert air gun against strainer installed on inlet of solenoid valve too deeply, when blowing air into solenoid valve. If not, the strainer will be damaged.

- Check that solenoid valve (1) actuate with click sound when battery voltage is conducted.
- When timing solenoid valve (1) is connected to battery (2), confirm that timing solenoid valve is open condition by blowing air (50 – 200 kPa, 0.5 – 2.0 kg/cm^2, 7 – 28.5 psi) into solenoid valve as shown in the figure.
- When timing solenoid valve (1) is not connected to battery (2), confirm that timing solenoid valve is close condition by blowing air (50 – 200 kPa, 0.5 – 2.0 kg/cm^2, 7 – 28.5 psi) into solenoid valve as shown in the figure.

NOTE:

Do not fail to inspect with air to prevent mistaken checking because return spring for valve is not installed into solenoid valve.

Installation

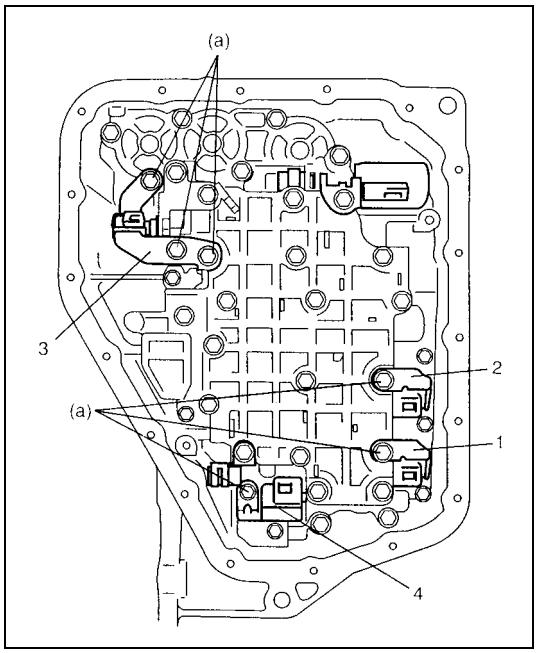

1) Install shift solenoid valve-A (No.1) (1), shift solenoid valve-B (No.2) (2), TCC solenoid valve (3) and timing solenoid valve (4).

Tightening torque
Solenoid valve bolts (a): 11 N·m (1.1 kg-m, 8.0 lb-ft)

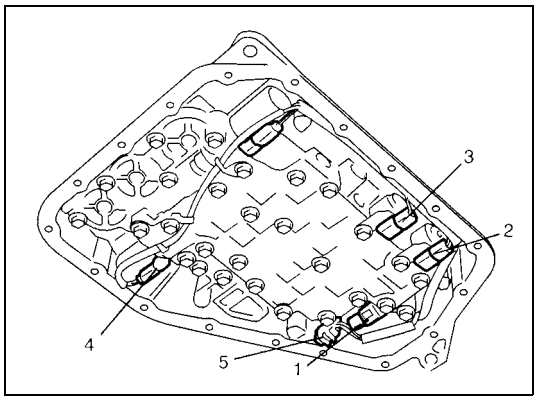

2) Connect solenoid connectors identifying their installing positions by wire color.

Solenoid coupler	Wire color
Shift solenoid valve-A (No.1) (2)	White
Shift solenoid valve-B (No.2) (3)	Black
Timing solenoid valve (1)	Yellow
TCC solenoid valve (4)	Light Green

3) Install transmission fluid temperature sensor (5) to sensor clamp.

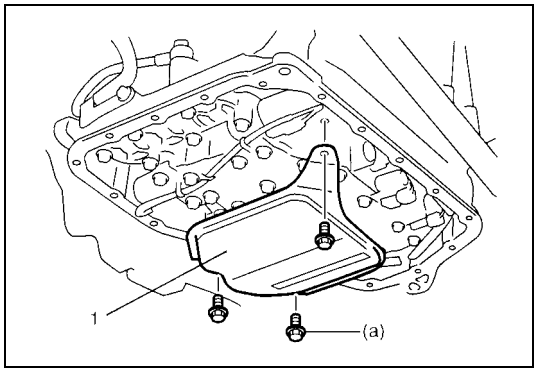

4) Install oil strainer assembly (1).

Tightening torque
Oil strainer bolts
(a): 10 N·m (1.0 kg-m, 7.5 lb-ft)

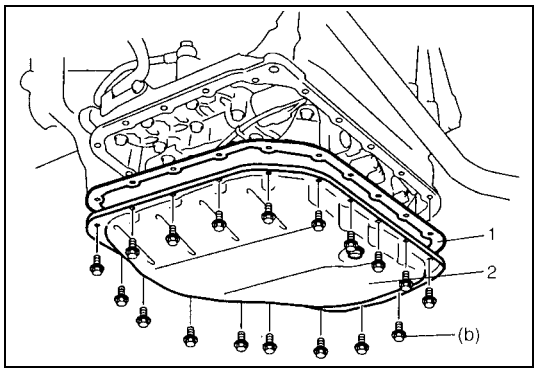

5) Install new oil pan gasket (1) and oil pan (2).

Tightening torque
Oil pan bolts
(b): 7.0 N·m (0.7 kg-m, 5.0 lb-ft)

Pressure Control Solenoid Valve

Removal

1) Disconnect negative cable at battery.
2) Lift up vehicle.
3) Remove drain plug and drain A/T fluid.
4) Install drain plug.

Tightening torque
A/T fluid drain plug: 17 N·m (1.7 kg-m, 12.5 lb-ft)

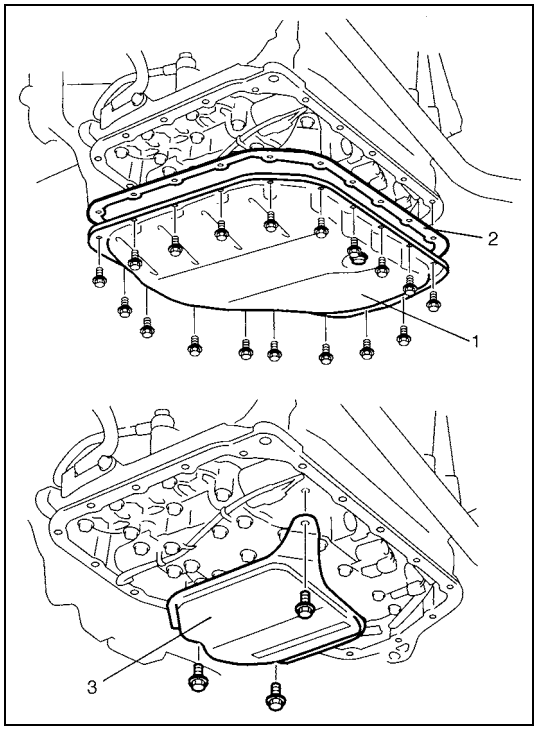

5) Remove A/T oil pan (1) and oil pan gasket (2).
6) Remove oil strainer assembly (3).

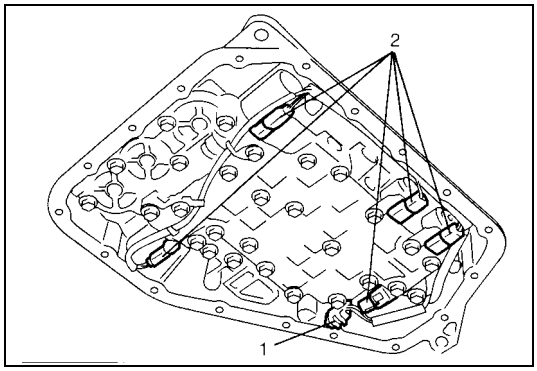

7) Remove transmission fluid temperature sensor (1) from sensor clamp.
8) Disconnect solenoid connectors (2).

9) Remove valve body assembly referring to “Unit Disassembly” in this section.
10) Remove pressure control solenoid valve referring to “Valve body assembly” in this section.

Inspection

Resistance Check

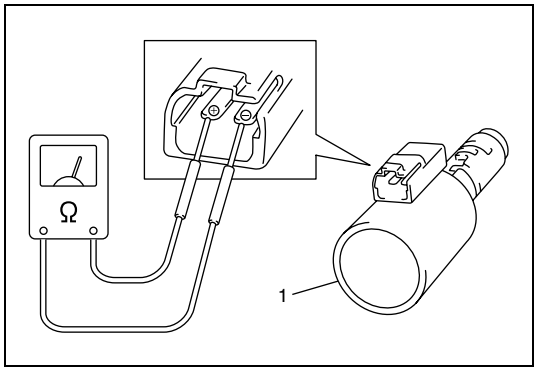

Measure resistance between pressure control solenoid valve (1) terminals.

Pressure control solenoid valve resistance
Standard: 5.0 – 5.6 Ω (at 20°C (68°F))

Operation Check

Check pressure control solenoid valve operation in the either manner of the followings.

[Using regulated DC power supply]

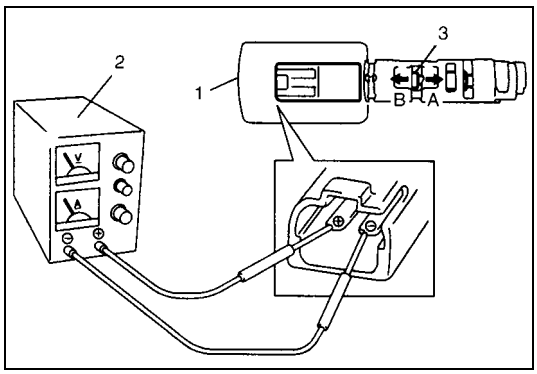

1) Connect pressure control solenoid valve (1) to regulated DC power supply (2) as shown in the figure.
2) Turn regulated DC power supply switch ON, increase voltage of power supply keeping current within 1.0 A.
3) Check for gradual movement of valve (3) in the direction of arrow “A” as voltage is increased.
4) Check for movement of valve (3) in the direction of arrow “B” as voltage is decreased.
5) Turn power supply switch OFF.

CAUTION:
Do not pass current 1.0 A or more, or pressure control solenoid is burned out.

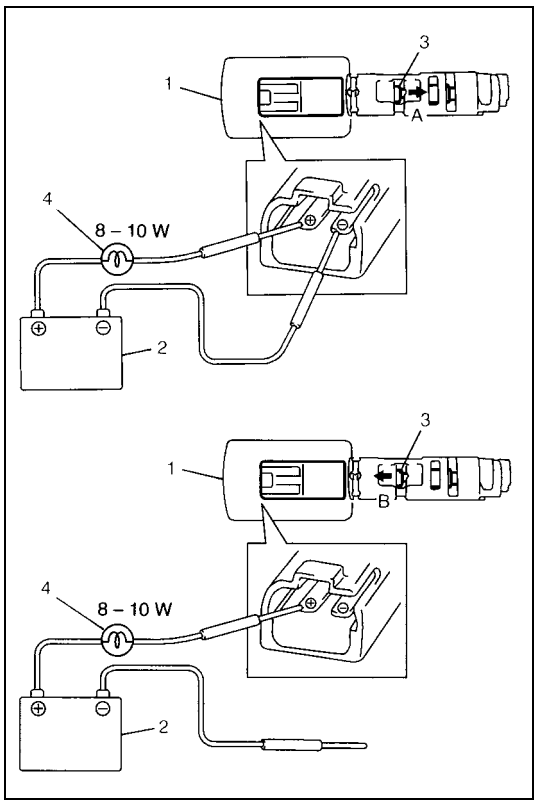

[Not using regulated DC power supply]

1) Connect pressure control solenoid valve (1) to battery (2) setting the 8 – 10 W bulb (4) on the way as shown in the figure.
2) Check for movement of valve (3) in the direction of arrow “A”.
3) Disconnect pressure control solenoid valve (1) from battery (2) and check for movement of valve (3) in the direction of arrow “B” as shown in the figure.

CAUTION:
Set 8 – 10 W bulb on the way, or pressure control solenoid valve is burned out.

Installation

Reverse removal procedure to install pressure control solenoid valve and valve body assembly noting the following points.

- For detail of pressure control solenoid valve installation, refer to “Valve body assembly” in this section.
- For detail of valve body assembly installation, refer to “Unit Assembly” in this section.
- For detail of installing wire harness for solenoid valves and sensor, refer to “Unit Assembly” in this section. Use new O-rings.
- For detail of A/T oil pan and oil strainer assembly installation, refer to “Unit Assembly” in this section. Use new oil pan gasket.
- Pour A/T fluid and check fluid level according to procedure described in “Fluid change” in this section.
- Check for fluid leakage after warning up A/T.

Transmission Control Module (TCM)

CAUTION:
- **TCM and ECM consists of highly precise parts, therefore when handling it, be careful not to expose to excessive shock.**
- **When replacing TCM with used one, all learned contents, which have been stored in TCM memory by executing learning control, should be initialized after replacement.**

Removal

1) Disconnect negative cable at battery.
2) If the vehicle is equipped with air bag system, disable air bag system. Refer to “Disabling Air Bag System” in Section 10B.
3) Disconnect connectors (1) from TCM (2).
4) Remove TCM (2) by removing its nuts (4).

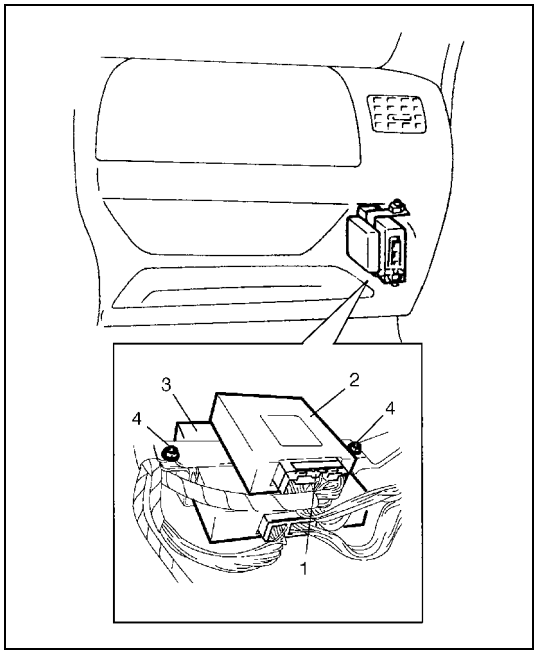

3. ECM

Installation

Reverse removal procedure noting the following.
- Connect TCM connectors securely.
- If the vehicle is equipped with air bag system, be sure to enable air bag system after TCM is back in place. Refer to “Enabling Air Bag System” in Section 10B.

A/T Relay

Inspection

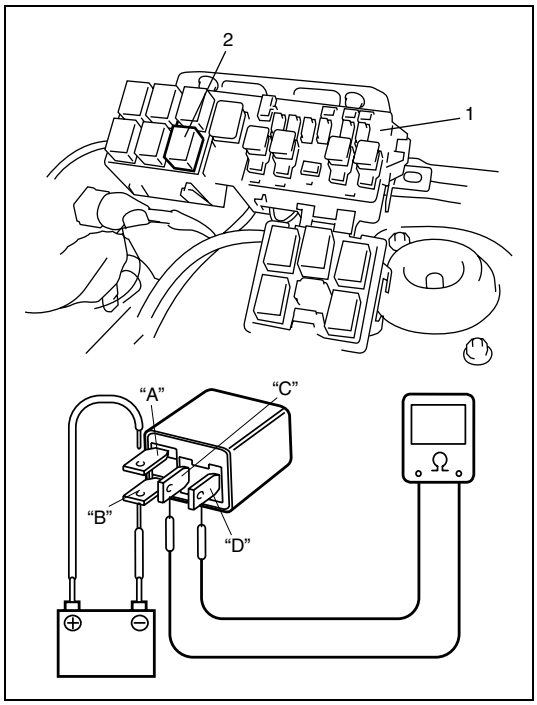

1) Disconnect negative cable at battery.
2) Remove A/T relay (2) from fuse and relay box (1).
3) Check that there is no continuity between terminal "C" and "D".
   If continuity is indicated, replace A/T relay.
4) Connect battery positive (+) terminal to terminal "A" of A/T relay and battery negative (–) terminal to terminal "B" of A/T relay.
   Check continuity between terminal "C" and "D" of A/T relay.
   If continuity does not indicated, replace A/T relay.

Transmission Fluid Temperature Sensor

Inspection

1) Disconnect negative cable at battery.
2) Lift up vehicle.
3) With engine is cool, remove drain plug and drain A/T fluid.
4) Install drain plug. (Refer to “Fluid change” in this section.)
5) Remove A/T oil pan.
6) Remove oil strainer assembly.
7) Remove valve body assembly referring to “Unit Disassembly in this section.

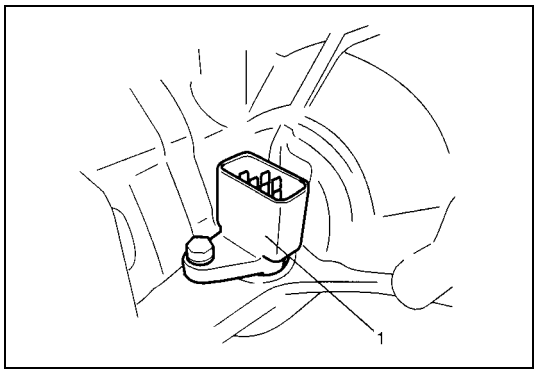

CAUTION:
When pulling solenoid wire harness out of transaxle case, take care not to damage transmission fluid temperature sensor at narrow exit of case.
Careless sensor treatment might cause sensor malfunction.

8) Remove solenoid wire harness (1).

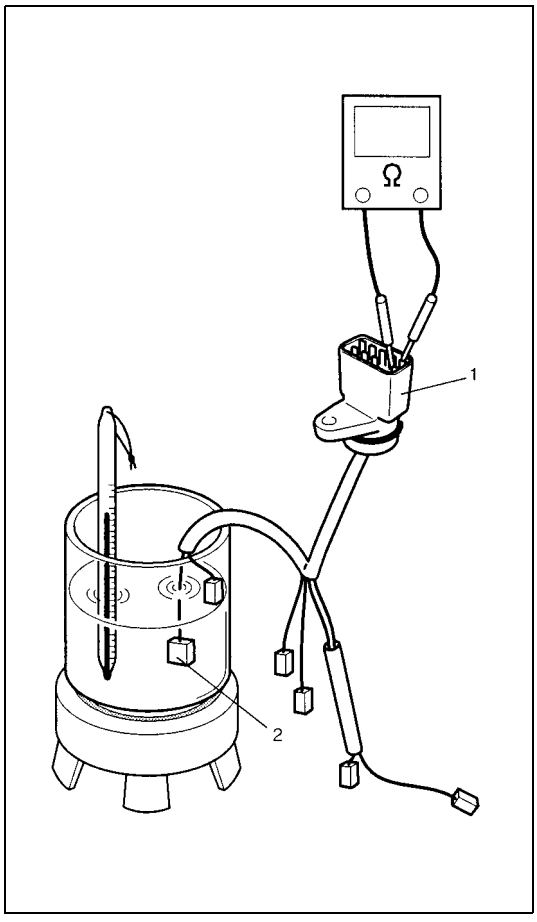

9) Warm up transmission fluid temperature sensor (2). Check resistance between terminals of valve body harness connector (1). Thus make sure its resistance decrease as its temperature increase.

Transmission fluid temperature sensor resistance

Temperature	Resistance
10°C (50°F)	5.8 – 7.1 kΩ
110°C (230°F)	231 – 263 Ω
145°C (293°F)	105 – 117 Ω

Installation

Reverse removal procedure to install solenoid wire harness and valve body assembly noting the following points.

- For details of valve body assembly and their connectors installation, refer to “Unit Assembly” in this section.
- For details of A/T oil pan installation, refer to “Unit Assembly” in this section. Use new oil pan gasket.

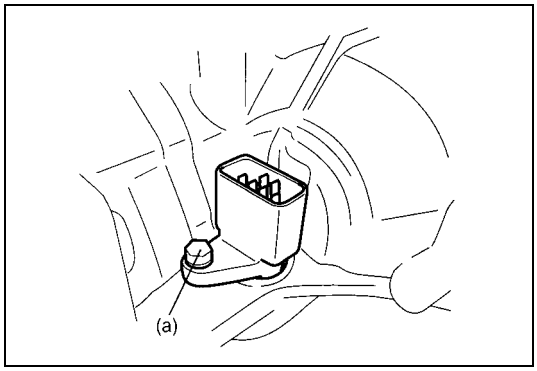

- Tighten valve body harness connector bolt to specified torque.

Tightening torque
Valve body harness connector bolt
(a): 5.5 N·m (0.55 kg-m, 4.0 lb-ft)

- Pour A/T fluid and check fluid level according to procedure described in “Fluid change” in this section.
- Check for fluid leakage after warning up A/T.

Differential Side Oil Seal

Replacement

1) Lift up vehicle and drain automatic transaxle fluid.
2) Remove drive shaft joints from differential gear of transaxle.
   Refer to “Front Drive Shaft Assembly Removal and Installation” in Section 4A for procedure to disconnect drive shaft joints.
   For differential side oil seal removal, it is not necessary to remove drive shafts from steering knuckle.

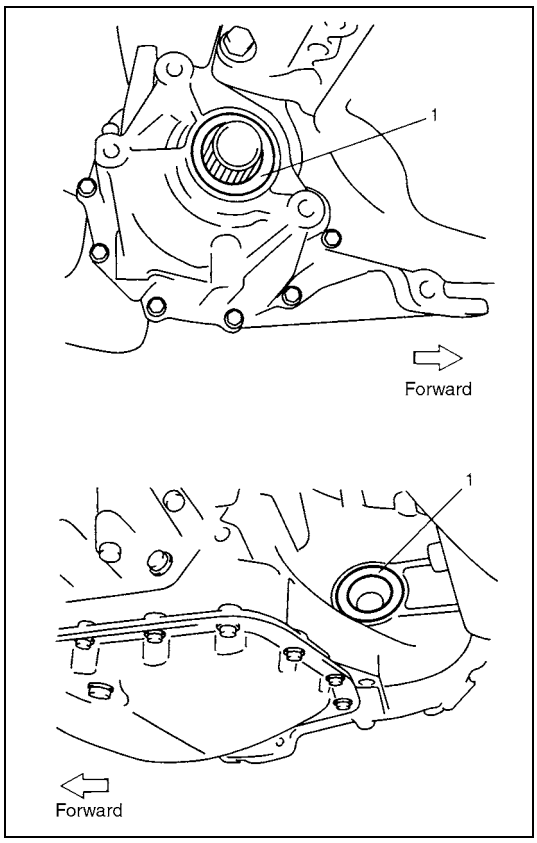

3) Remove differential side oil seal (1) by using screw driver or like.

4) Apply grease to new differential side oil seal lips.

   Grease 99000-25030

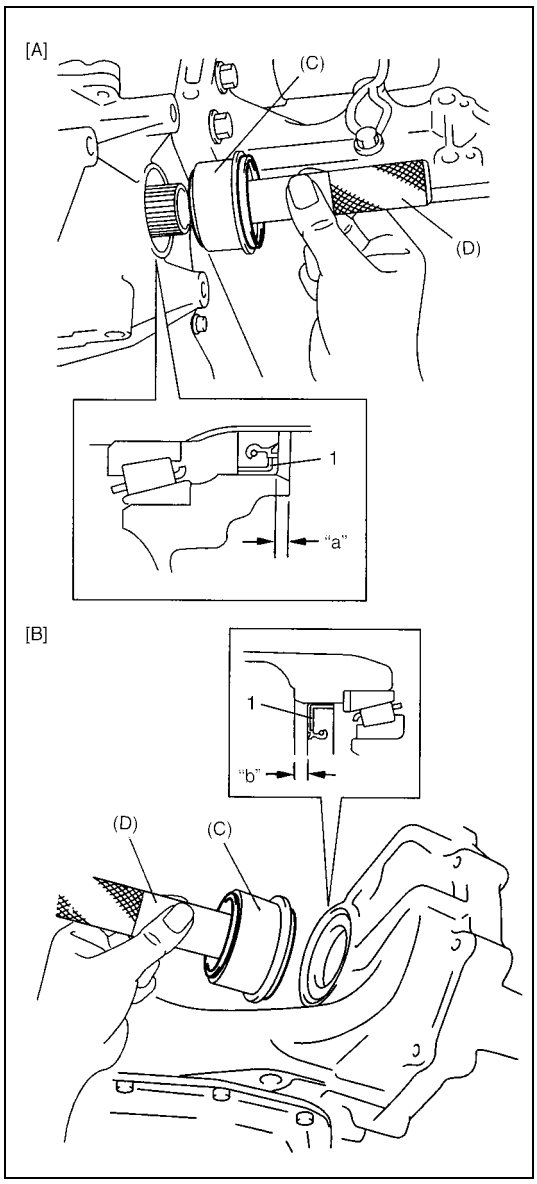

5) Install new differential side oil seals (1) by using special tool.

Special tool
(C): 09944-88220
(D): 09924-74510

Differential side oil seal installing depth
Right side "a": 2.6 – 3.6 mm (0.10 – 0.14 in)
Left side "b": 3.8 – 4.8 mm (0.15 – 0.19 in)

[A]: Right side
[B]: Left side

6) Install drive shaft referring to "Front Drive Shaft Assembly Removal and Installation" in Section 4A.
7) Pour A/T fluid referring to "Fluid change" in this section.

Automatic Transaxle Assembly

Components

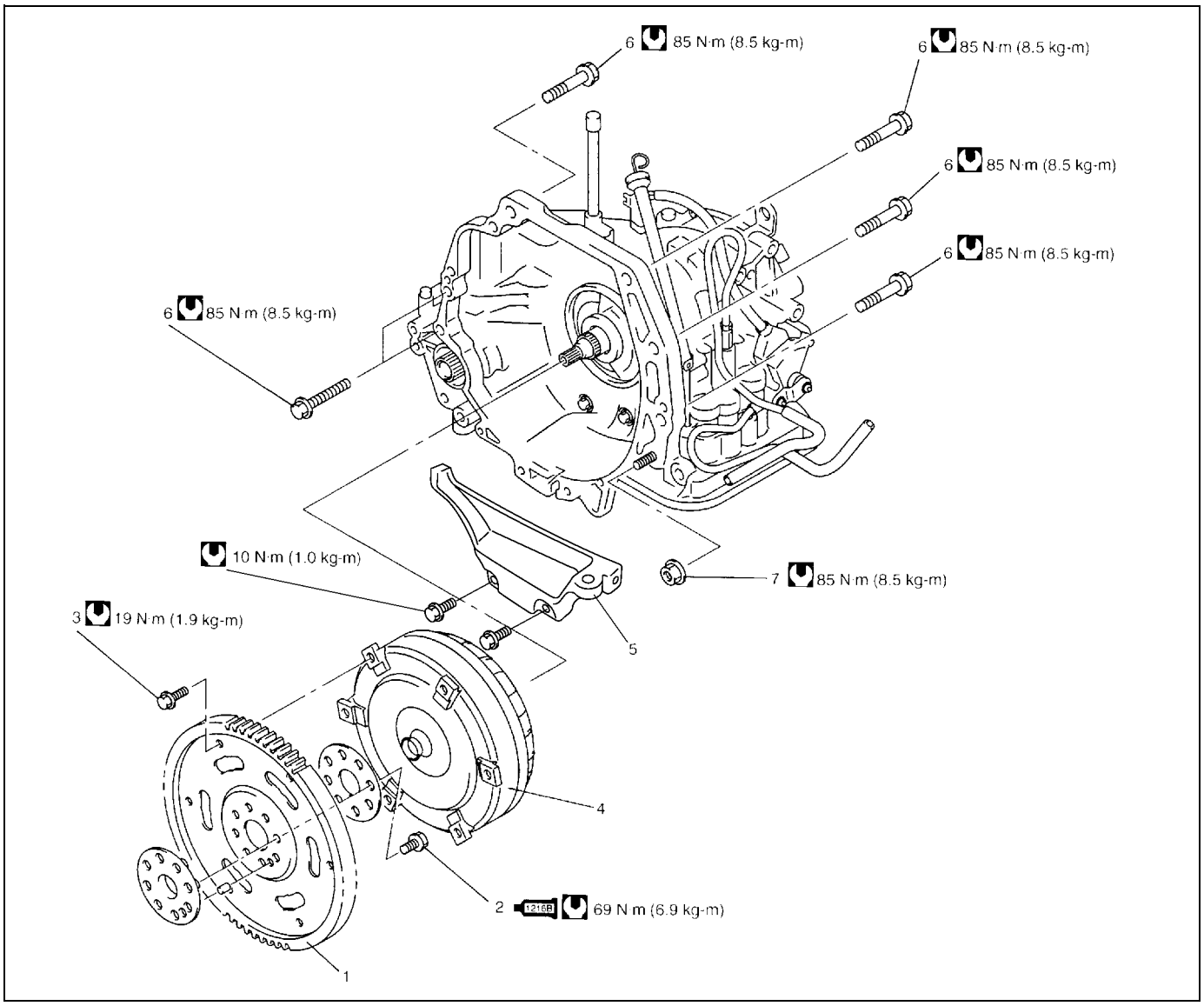

	1. Drive plate		5. Lower stiffener
1216B	2. Drive plate bolt : Apply sealant 99000-31230 to thread.		6. Transaxle and engine fastening bolt
	3. Drive plate to torque converter bolt		7. Transaxle and engine fastening nut
	4. Torque converter		Tightening torque

Dismounting

1) Take down transaxle with engine. For its procedure, refer to "Engine Assembly Removal and Installation" in Section 6A1.

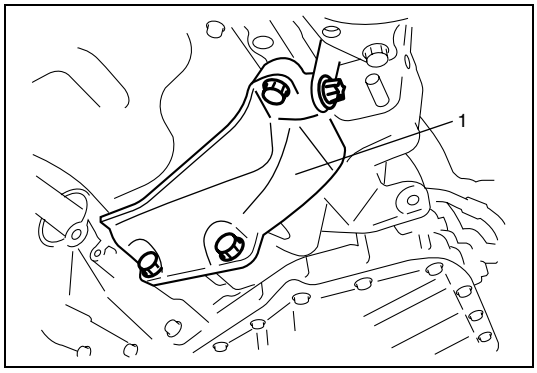

2) Remove lower stiffener (1).

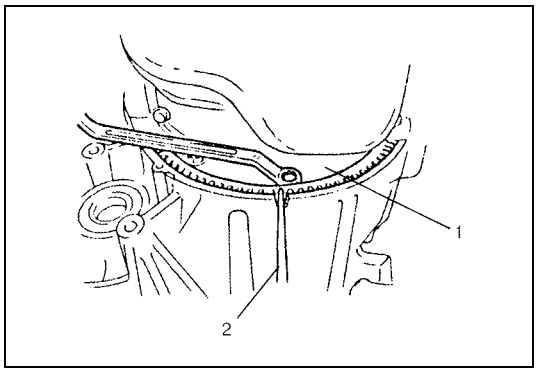

3) Remove drive plate to torque converter bolts.
   To lock drive plate (1), engage flat head rod or the like (2) with drive plate ring gear.

4) Remove starting motor.

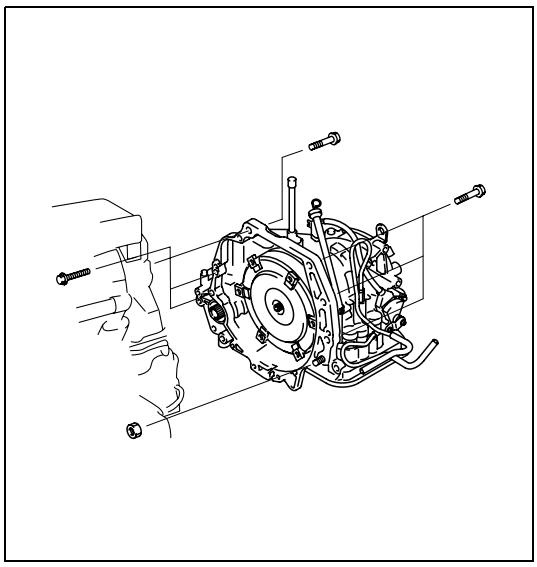

WARNING:

Be sure to keep transaxle with torque converter horizontal or facing up throughout the work. Should it be tilted with torque converter down, converter may fall off and cause personal injury.

NOTE:

When detaching transaxle from engine, move it in parallel with crankshaft and use care so as not to apply excessive force to drive plate and torque converter.

5) Remove bolts and nut fastening engine and transaxle, then detach transaxle from engine.

Remounting

1) Make sure that torque converter is installed correctly to transaxle.
   Refer to “Unit Assembly” in this section.

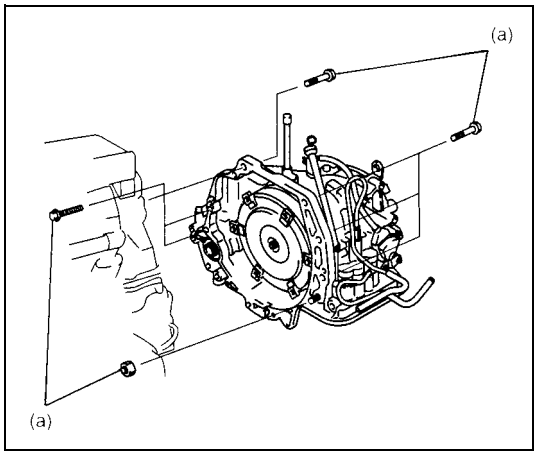

WARNING:
Be sure to keep transaxle with torque converter horizontal or facing up throughout the work. Should it be tilted with torque converter down, converter may fall off and cause personal injury.

2) Attach transaxle to engine.

Tightening torque
Transaxle and engine fastening bolts and nut
(a): 85 N·m (8.5 kg-m, 61.5 lb-ft)

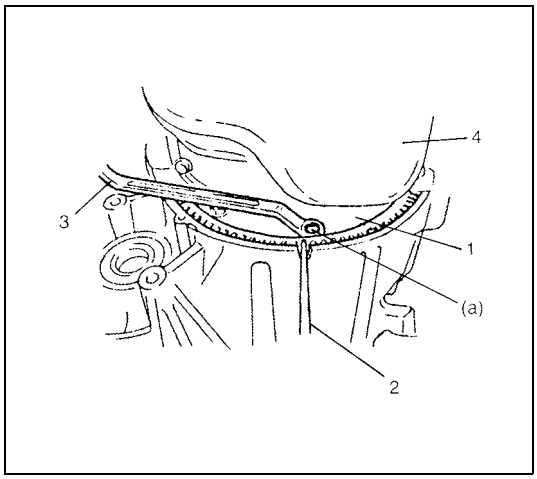

3) Tighten drive plate to torque converter bolts.
   Align bolt hole of drive plate and torque converter then tighten bolts through torque converter housing lower plate opening.
   Lock drive plate (1) by engaging flat head rod or the like (2) with drive plate gear.

Tightening torque
Drive plate to torque converter bolts
(a): 19 N·m (1.9 kg-m, 14.0 lb-ft)

3.	Wrench
4.	Engine oil pan

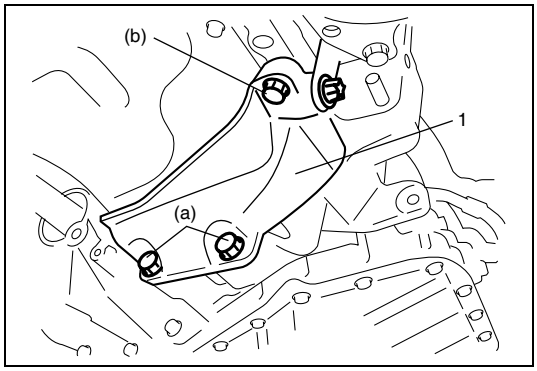

4) Install lower stiffener (1).
   Tighten lower stiffener bolts (a) first and next (b) with specified torque.

Tightening torque
Lower stiffener bolts
(a): 55 N·m (5.5 kg-m, 40 lb-ft)
(b): 55 N·m (5.5 kg-m, 40 lb-ft)

5) Install starter motor.

Tightening torque
Starter motor bolt and nut: 50 N·m (5.0 kg-m, 36.5 lb-ft)

6) Remount engine with transaxle assembly to vehicle. Refer to “Engine Assembly Removal and Installation” in Section 6A1 for its procedure.

Unit Repair

When repairing automatic transaxle, it is necessary to conduct the on-vehicle test to investigate where the cause of the trouble lies first.
Then whether overhaul should be done or not is determined. If the transaxle is disassembled without such preliminary procedure, not only the cause of the trouble would be unknown, but also a secondary trouble may occur and often time would be wasted.

Precautions

As the automatic transaxle consists of high precision component, the following cautions should be strictly observed when handling its parts in disassembly and reassembly.

- Disassembling valve body assembly is prohibited essentially. However, a few parts can be disassembled. When disassembling valve body component parts, confirm whether their parts are allowed to disassemble or not referring to “Valve body assembly” in this section.
- Make sure to wash dirt off from the transaxle so that no such dirt will enter the transaxle during dismounting and remounting.
- Select a clean place free from dust and dirt for overhauling.
- Place a rubber mat on the work bench to protect parts from damage.
- Work gloves or shop cloth should not be used. (Use a nylon cloth or a paper towel.)
- When separating the case joint, do not pry with a screwdriver or such but tap with a plastic hammer lightly.
- Make sure to wash dirt off from the transaxle so that no such dirt will enter the transaxle during disassembly and reassembly.
- Wash the disassembled parts in ATF (Automatic Transaxle Fluid) or kerosene (using care not to allow ATF or kerosene to get on your face, etc.) and confirm that each fluid passage is not clogged by blowing air into it. But use kerosene to wash the discs, resin washers and rubber parts.
- Replace each gasket, oil seal and O-ring with a new one.
- Apply ATF to sliding or rotating parts before reassembly.
- A new discs should be soaked in ATF at least 2 hours before use.

Part Inspection and Correction Table

Part	Inspect for	Correction
Casted part, machined part	Small flaw, burr	Remove with oil stone.
	Deep or grooved flaw	Replace part.
	Clogged fluid passage	Clean with air or wire.
	Flaw on installing surface, residual gasket	Remove with oil stone or replace part.
	Crack	Replace part.
Bearing	Unsmooth rotation	Replace.
	Streak, pitting, flaw, crack	Replace.
Bushing, thrust washer	Flaw, burr, wear, burning	Replace.
Oil seal, gasket	Flawed or hardened seal ring	Replace.
	Worn seal ring on its periphery or side	Replace.
	Piston seal ring, oil seal, gasket, etc.	Replace.
Gear	Flaw, burr	Replace.
	Worn gear tooth	Replace.
Splined part	Burr, flaw, torsion	Correct with oil stone or replace.
Snap ring	Wear, flaw, distortion	Replace.
	No interference	Replace.
Thread	Burr	Replace.
	Damage	Replace.
Spring	Settling, sign of burning	Replace.
Friction plate	Wear, burning, distortion, damaged claw	Replace.
Separator plate, retaining plate	Wear, burning, distortion, damaged claw	Replace.
Sealing surface (where lip contacts)	Flaw, rough surface, stepped wear, foreign material	Replace.

Unit Disassembly

CAUTION:

- **Thoroughly clean transaxle exterior before overhauling it.**
- **Keep working table, tools and hands clean while overhauling.**
- **Use special care to handle aluminum parts so as not to damage them.**
- **Do not expose removed parts to dust. Keep them always clean.**

Components

NOTE:

Oil pump assembly, direct clutch assembly, forward and reverse clutch assembly, 2nd brake piston assembly, O/D and 2nd coast brake piston and return spring, differential assembly, countershaft assembly and valve body assembly are not shown in figure below.

For the detail of these components, refer to "Disassembly/Assembly of Subassembly" in this section.

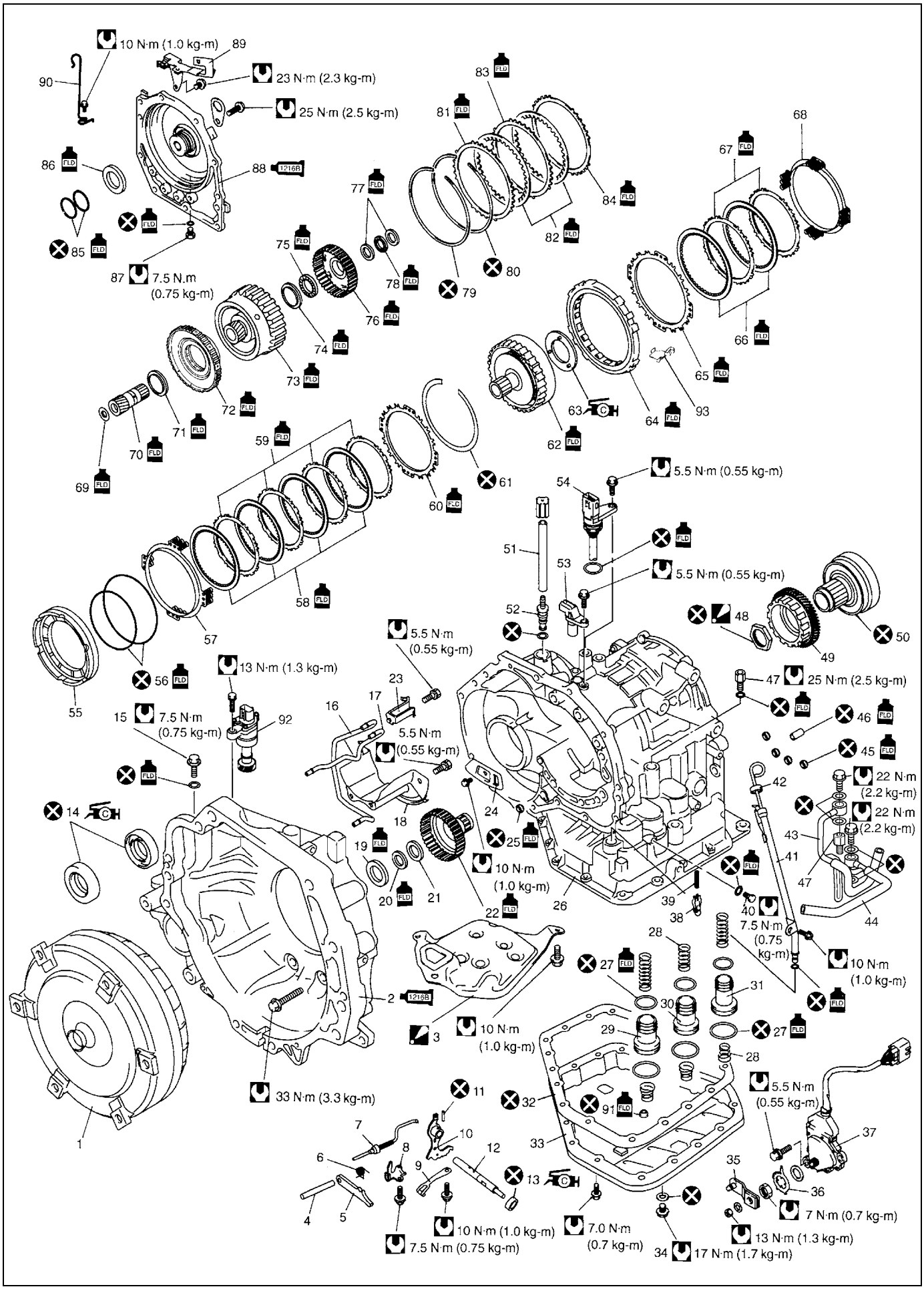
10 N·m (1.0 kg-m)
23 N·m (2.3 kg-m)
25 N·m (2.5 kg-m)
7.5 N.m (0.75 kg-m)
5.5 N·m (0.55 kg-m)
13 N·m (1.3 kg-m)
7.5 N·m (0.75 kg-m)
5.5 N·m (0.55 kg-m)
5.5 N·m (0.55 kg-m)
25 N·m (2.5 kg-m)
22 N·m (2.2 kg-m)
22 N·m (2.2 kg-m)
10 N·m (1.0 kg-m)
7.5 N·m (0.75 kg-m)
10 N·m (1.0 kg-m)
10 N·m (1.0 kg-m)
33 N·m (3.3 kg-m)
5.5 N·m (0.55 kg-m)
7 N·m (0.7 kg-m)
13 N·m (1.3 kg-m)
17 N·m (1.7 kg-m)
7.0 N·m (0.7 kg-m)
10 N·m (1.0 kg-m)
7.5 N·m (0.75 kg-m)

1. Torque converter	33. Oil pan	65. 2nd brake retaining plate
1216B 2. Torque converter housing : Apply sealant 99000-31230 to mating surface to transaxle case.	34. A/T fluid drain plug	66. 2nd brake disc
3. Oil strainer assembly : Replace oil strainer when overhauling.	35. Manual select lever	67. 2nd brake separator plate
4. Parking lock pawl shaft	36. Lock washer	68. 2nd brake return spring subassembly
5. Parking lock pawl	37. Transmission range sensor	69. Front sun gear thrust bearing race
6. Parking lock pawl return spring	38. Cooler check valve	70. Front planetary sun gear
7. Parking lock pawl rod	39. Spring	71. Planetary gear thrust bearing
8. Parking lock pawl bracket	40. Transaxle case plug	72. One-way clutch No.1 assembly
9. Manual detent spring	41. Fluid filler tube	73. Rear planetary sun gear subassembly
10. Manual valve lever	42. Fluid level gauge	74. Rear sun gear thrust bearing race
11. Manual valve lever pin	43. Fluid cooler inlet pipe	75. Rear sun gear thrust bearing
12. Manual shift shaft	44. Fluid cooler outlet pipe	76. Forward clutch hub
C 13. Manual shift shaft oil seal : Apply grease 99000-25030 to oil seal lip.	45. 2nd brake gasket	77. Intermediate shaft thrust bearing race
C 14. Differential side oil seal : Apply grease 99000-25030 to oil seal lip.	46. Brake drum gasket	78. Intermediate shaft thrust bearing
15. Torque converter housing plug	47. Pipe union	79. 2nd brake piston snap ring
16. Lubrication LH tube	48. Reduction drive gear nut : After tightening nut so as rotational torque of reduction drive gear to be in specified value, caulk nut securely.	80. O/D and 2nd coast brake retaining plate snap ring
17. Lubrication RH tube	49. Reduction drive gear	81. O/D and 2nd coast brake retaining plate
18. Fluid reservoir RH plate	50. Planetary ring gear subassembly	82. O/D and 2nd coast brake disc
19. Input shaft front thrust bearing	51. Breather hose	83. O/D and 2nd coast brake separator plate
20. Input shaft rear thrust bearing	52. Breather union	84. O/D and 2nd coast brake rear plate
21. Input shaft rear thrust bearing race	53. Input shaft speed sensor	85. Rear cover seal ring
22. Direct clutch hub	54. Valve body harness	86. Reverse clutch drum thrust bearing
23. Lubrication tube clamp	55. 1st and reverse brake piston	87. Rear cover plug
24. Fluid reservoir LH plate	56. O-ring	1216B 88. Transaxle rear cover : Apply sealant 99000-31230 to mating surface.
25. Governor apply No.2 gasket	57. 1st and reverse brake return spring subassembly	89. Harness bracket
26. Automatic transaxle case	58. 1st and reverse brake disc	90. Select cable clamp
27. Accumulator piston O-ring	59. 1st and reverse brake separator plate	91. Governor apply No.1 gasket
28. Accumulator spring	60. 1st and reverse brake retaining plate	92. Output shaft speed sensor (VSS)
29. C2 accumulator piston	61. 1st and reverse brake snap ring	93. One-way clutch outer race retainer
30. C1 accumulator piston	62. Planetary gear assembly	Do not reuse.
31. B1 accumulator piston	C 63. Planetary carrier thrust washer : Apply grease 99000-25030 to slide contact face.	FLD Apply automatic transaxle fluid.
32. Oil pan gasket	64. One-way clutch No.2 assembly	Tightening torque

Disassembly

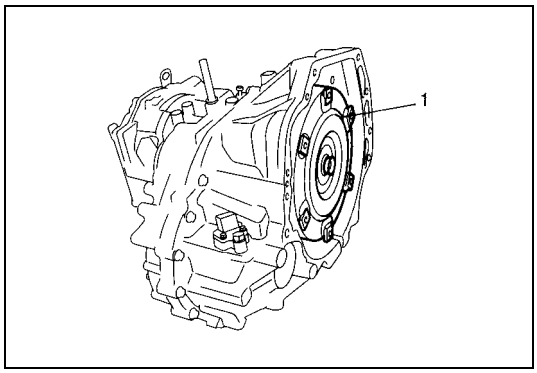

CAUTION:
Remove torque converter as much straight as possible. Leaning it may cause to damage oil seal lip.

1) Remove torque converter (1).

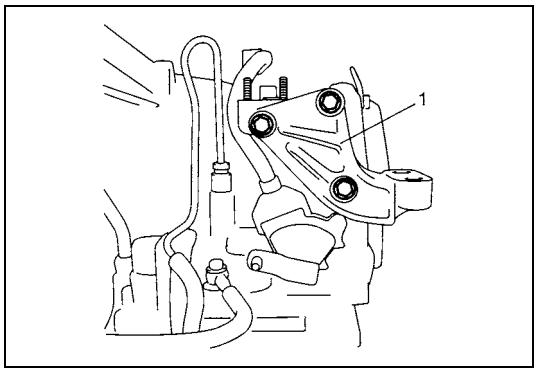

2) Remove engine mounting LH bracket (1).

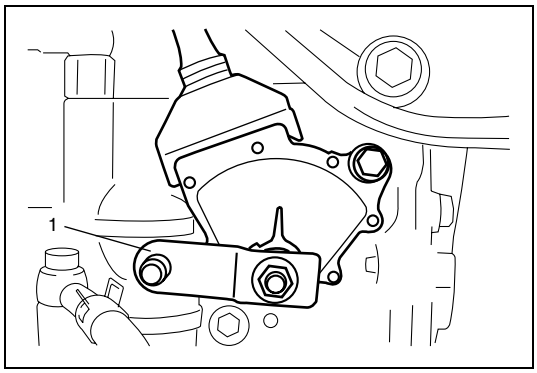

3) Remove manual select lever (1).

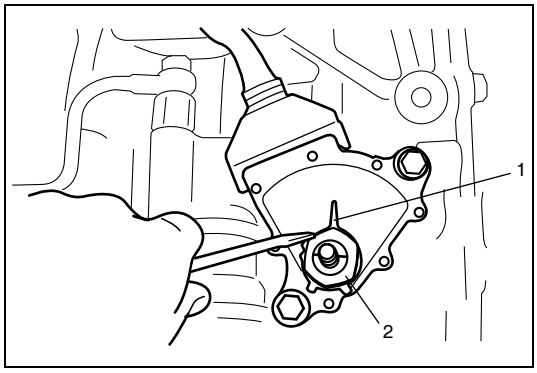

4) Uncaulk lock washer (1), then remove lock nut (2) and lock washer (1).

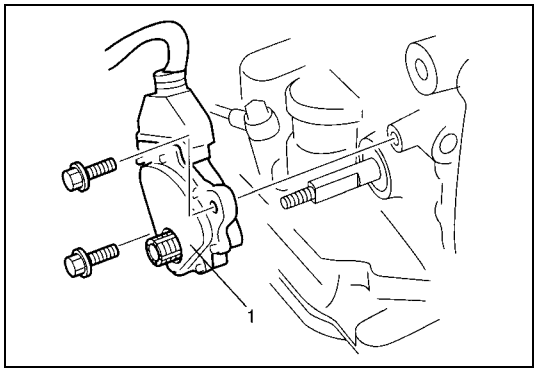

5) Remove transmission range sensor (1).

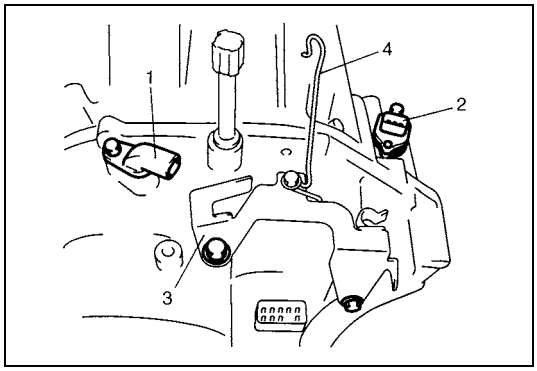

6) Remove input shaft speed sensor (1) and output shaft speed sensor (VSS) (2).
7) Remove harness bracket (3) and select cable clamp (4).

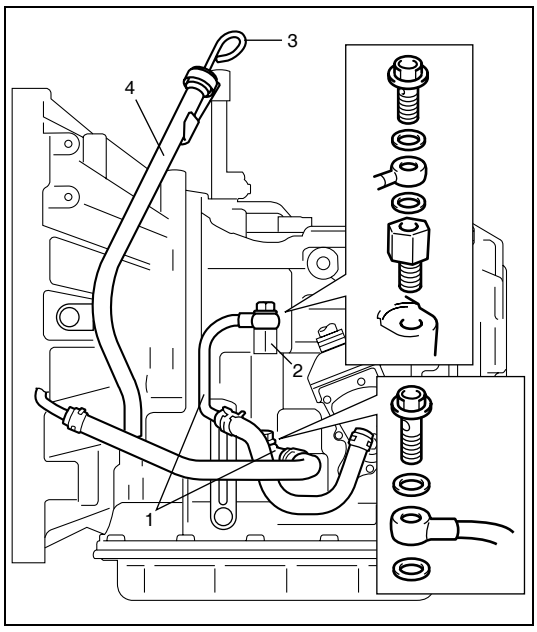

8) Remove fluid cooler pipes (1) and pipe union (2).
9) Remove fluid level gauge (3) and fluid filler tube (4).

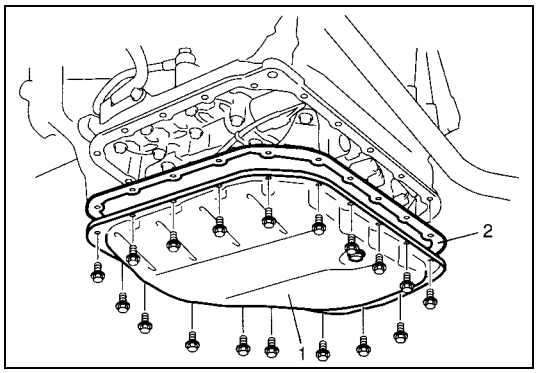

10) Remove oil pan (1) and oil pan gasket (2).

NOTE:

- **For removal of oil pan, do not turn transaxle over as this will contaminate valve body with foreign materials in bottom of oil pan.**
- **When removing oil pan, tap around it lightly with plastic hammer. Do not force it off by using screwdriver or the like.**

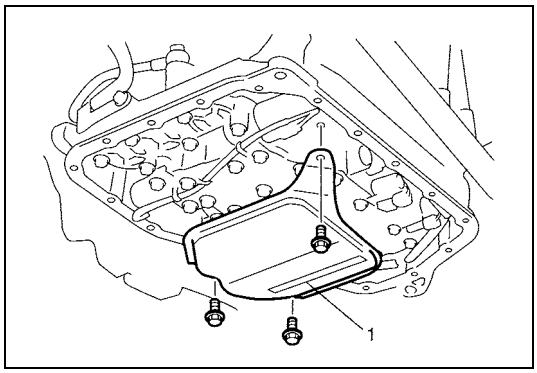

11) Remove oil strainer assembly (1).

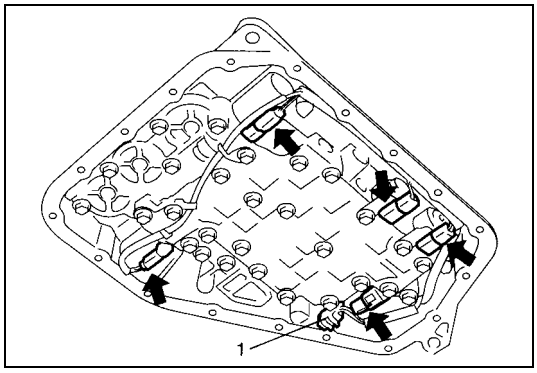

12) Disconnect connectors from solenoid valves, and transmission fluid temperature sensor (1).

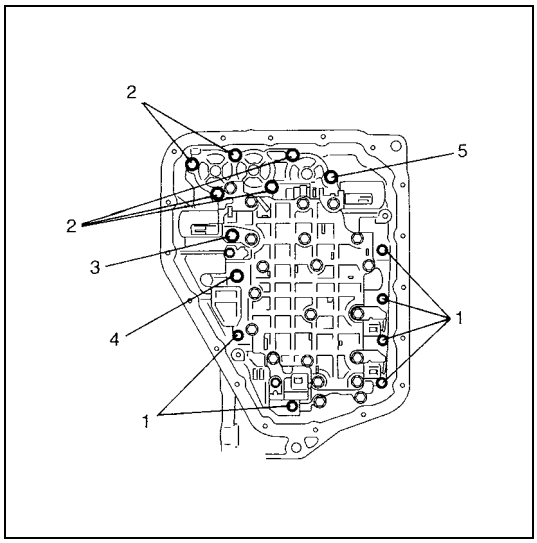

13) Remove valve body assembly bolts.

CAUTION:

Be careful not to let manual valve fall off when removing valve body assembly.

NOTE:

There are five kinds of bolts (bolts A, B, C, D, and E) fixing valve body assembly

1. Bolt A
2. Bolt B
3. Bolt C
4. Bolt D
5. Bolt E

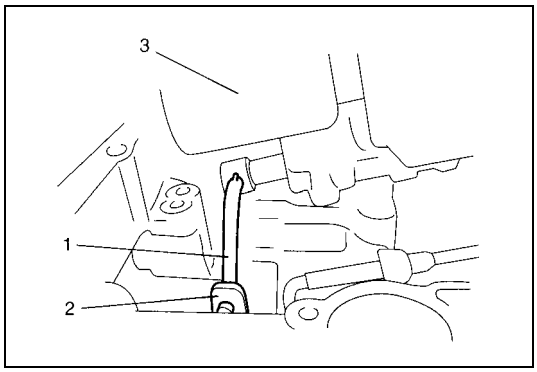

14) Remove manual valve rod (1) from manual valve lever (2), then remove valve body assembly (3).

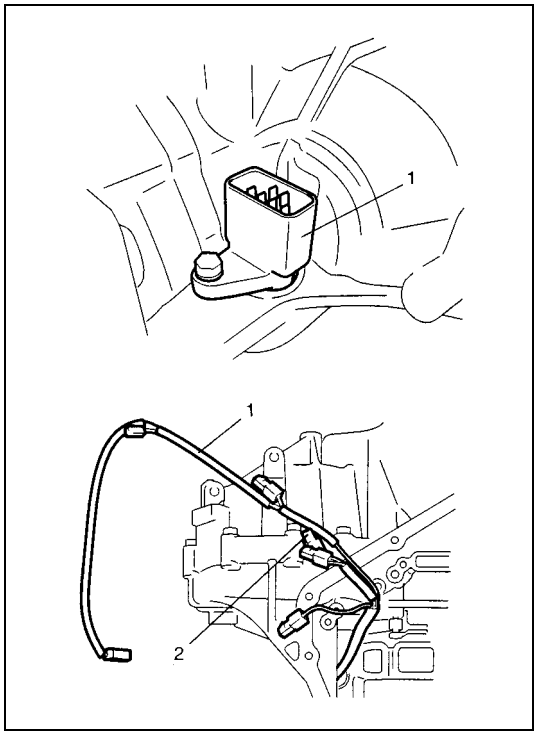

15) Remove valve body harness (1).

CAUTION:
When pulling valve body harness (1) out of transaxle case, take care not to damage transmission fluid temperature sensor (2) at narrow exit of case.
Careless sensor treatment might cause sensor malfunction.

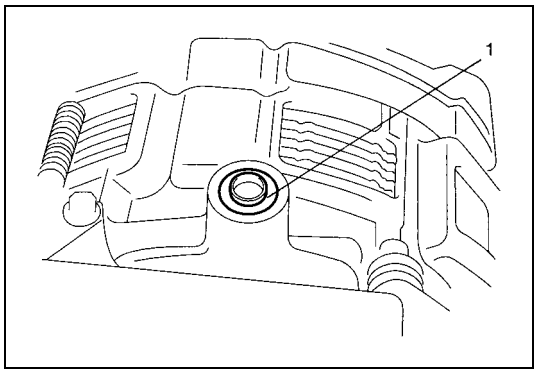

16) Remove governor apply No.1 gasket (1).

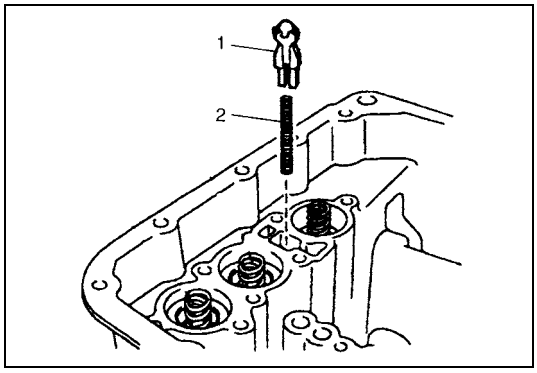

17) Remove cooler check valve (1) and spring (2).

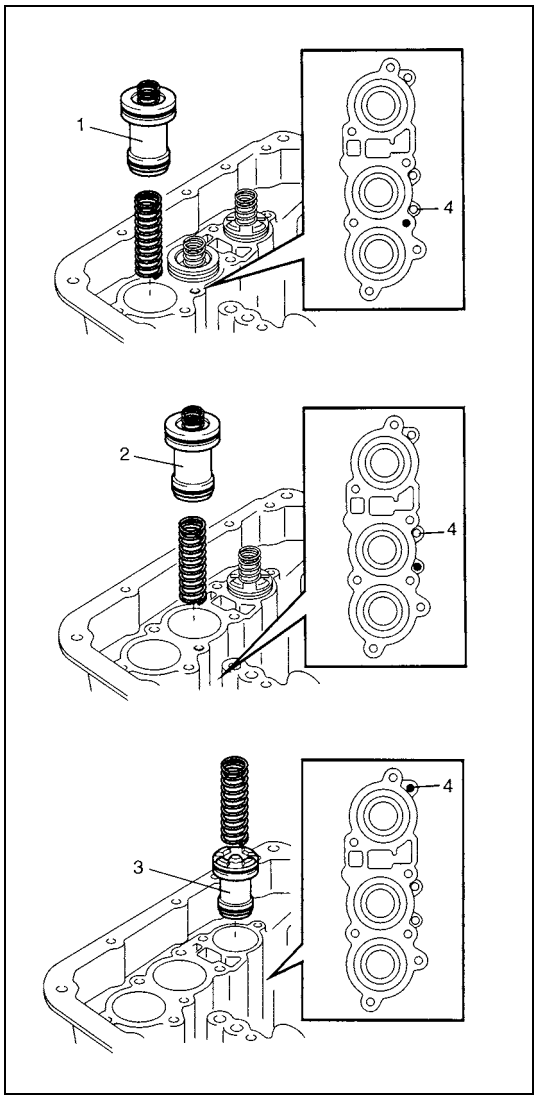

18) Remove accumulator pistons and springs.
To remove C2 (1), C1 (2) and B1 (3) accumulator pistons and springs, position rag on pistons to catch each piston. To remove pistons, force low-pressure compressed air (1 kg/cm^2, 15 psi, 100 kPa, max) into hole (4) as shown in figure, and pop each piston into rag.

NOTE:

Do not push accumulator pistons with fingers or anything before removing them. Pushing them may cause compressed fluid in accumulator to spew out of hole and get to your face and clothes.

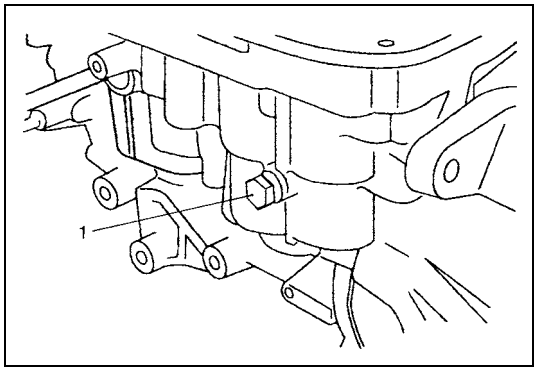

19) Remove transaxle case plug (1).

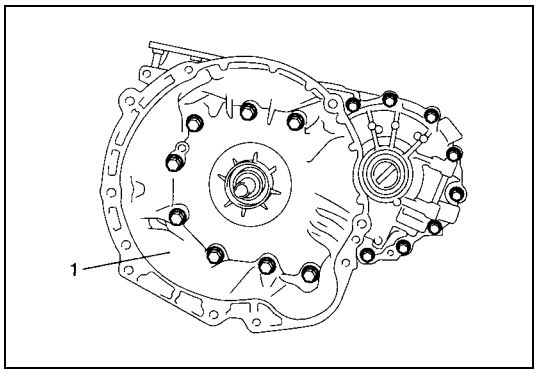

20) Remove torque converter housing bolts.
21) Remove torque converter housing (1) while tapping around it lightly with plastic hammer.

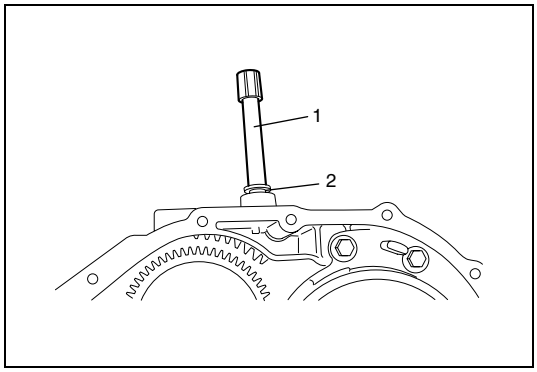

22) Remove breather hose (1).
23) Remove breather union (2).

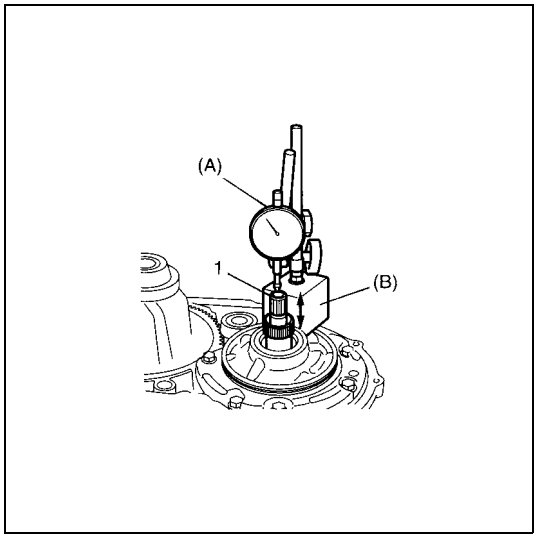

24) Measure input shaft thrust play.
Apply dial gauge onto input shaft end (1) and measure thrust play of input shaft.
When input shaft thrust play is out of specification, select input shaft front thrust bearing with proper thickness from among the list below and replace it.

Special tool
(A): 09900-20607
(B): 09900-20701

Input shaft thrust play: 0.3 – 0.9 mm (0.012 – 0.035 in.)

Available input shaft front thrust bearing thickness
0.8, 1.4 mm (0.032, 0.055 in.)

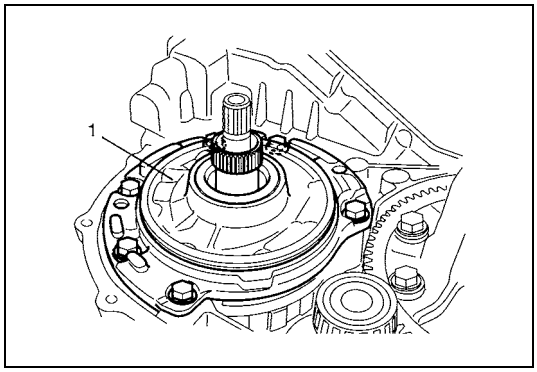

25) Remove oil pump assembly (1).

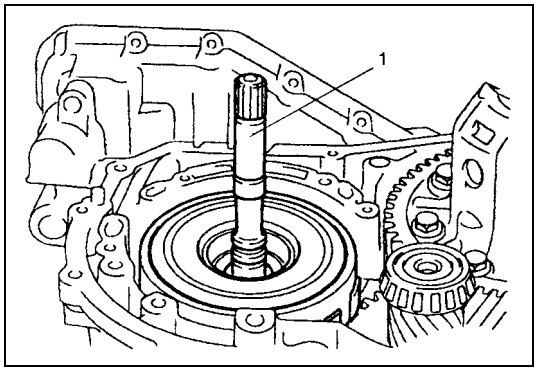

26) Remove direct clutch assembly (1).

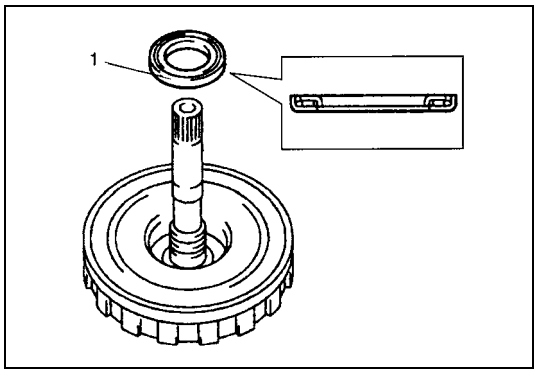

27) Remove input shaft front thrust bearing (1).

NOTE:

If input shaft front thrust bearing is not found, it may have been taken out with oil pump assembly.

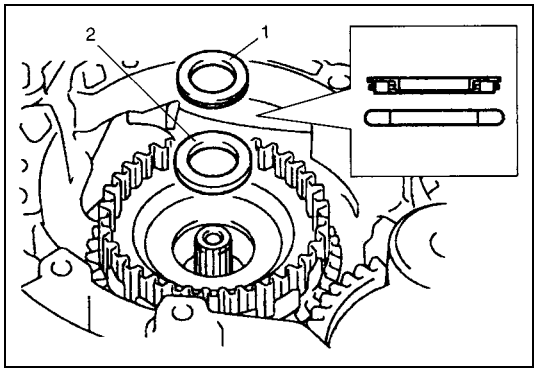

28) Remove input shaft rear thrust bearing (1) and thrust bearing race (2).

NOTE:

If input shaft rear thrust bearing is not found, it may have been taken out with direct clutch assembly.

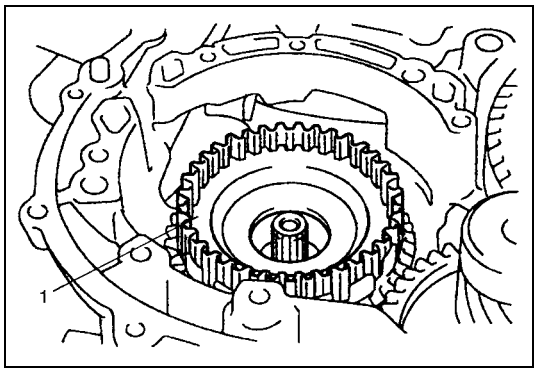

29) Remove direct clutch hub (1).

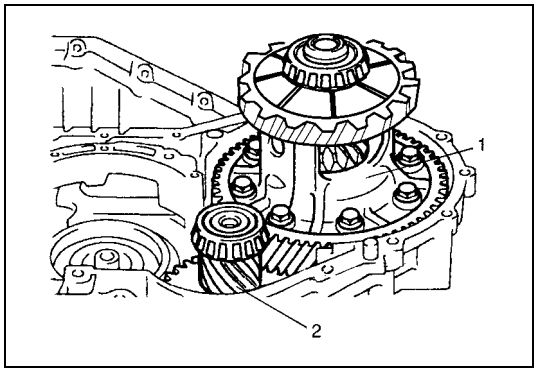

30) Remove differential assembly (1) and counter shaft assembly (2).

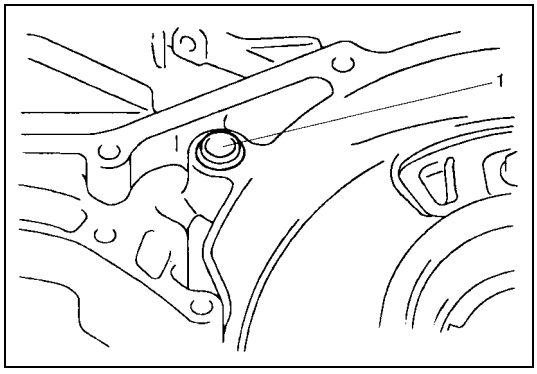

31) Remove governor apply No.2 gasket (1).

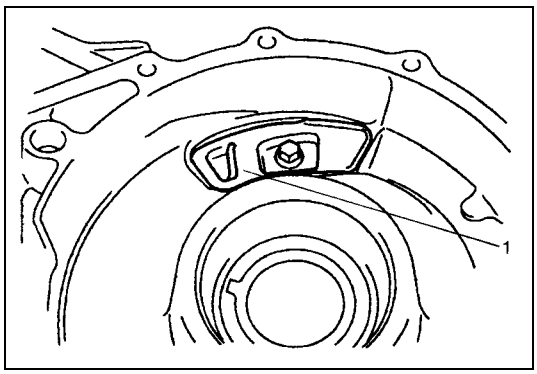

32) Remove fluid reservoir LH plate (1).

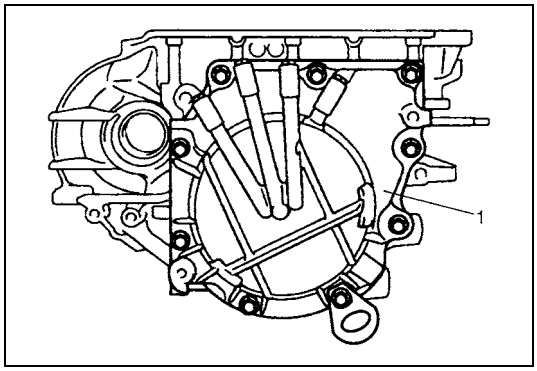

33) Turn over transaxle and remove rear cover assembly (1).

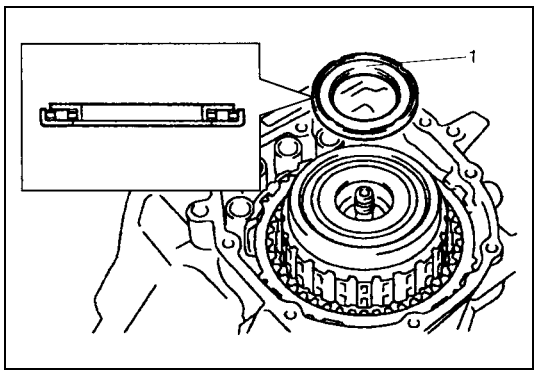

34) Remove reverse clutch drum thrust bearing (1).

NOTE:

If reverse clutch drum thrust bearing is not found, it may have been taken out with rear cover assembly.

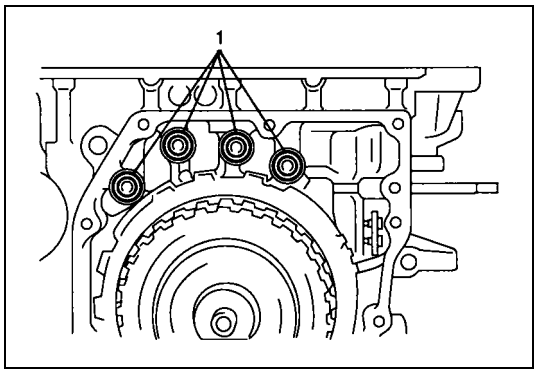

35) Remove 2nd brake gasket (1).

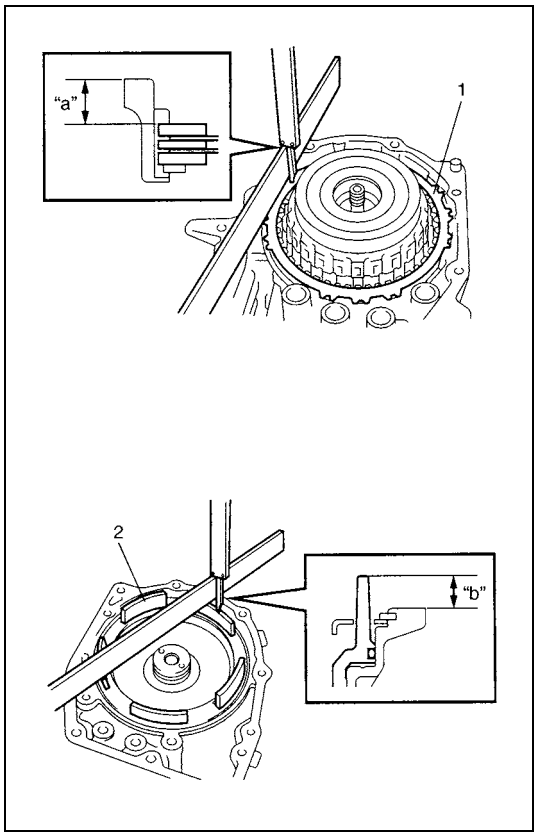

36) Measure O/D and 2nd coast brake piston stroke.
- Measure dimension "a" from mating surface of transaxle case to O/D and 2nd coast brake rear plate (1) using straightedge and micrometer caliper.
- Measure dimension "b" from O/D and 2nd coast brake piston (2) to rear cover assembly mating surface using straightedge and micrometer caliper.
- Calculate piston stroke from measured value of dimensions "a" and "b".
- Piston stroke = "a" – "b"

O/D and 2nd coast brake piston stroke
Standard: 0.65 – 1.05 mm (0.026 – 0.041 in.)

If piston stroke exceeds specification above, inspect and replace plates and discs.

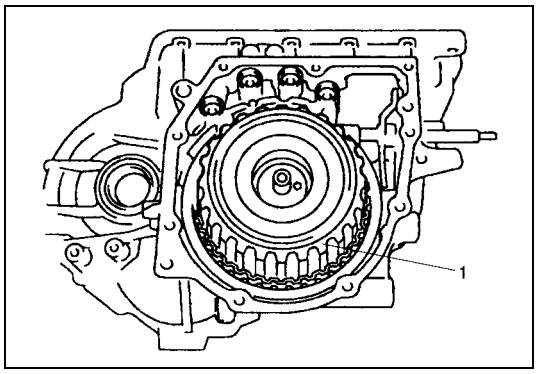

37) Remove forward and reverse clutch assembly (1).

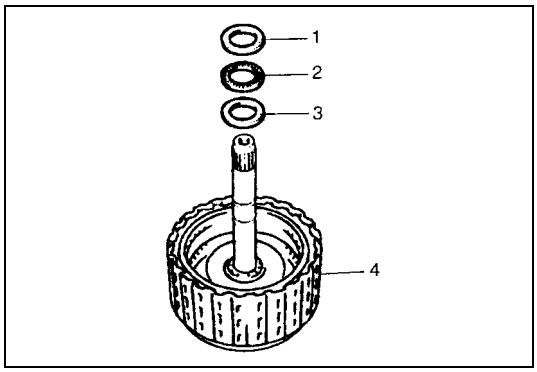

38) Remove intermediate shaft thrust bearing front race (1), thrust bearing (2) and rear race (3) from forward and reverse clutch assembly (4).

NOTE:

If intermediate shaft thrust bearing and/or races are not found on forward and reverse clutch assembly, they may have been left in transaxle.

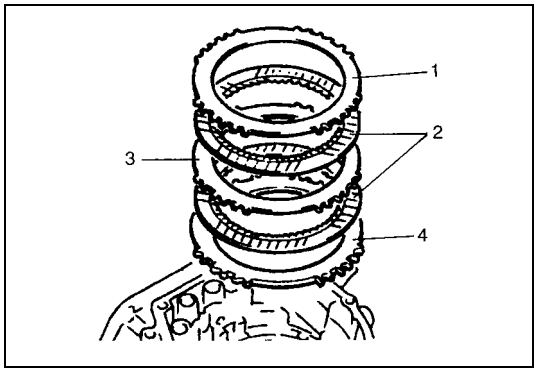

39) Remove O/D and 2nd coast brake rear plate (1), discs (2), separator plate (3) and retaining plate (4).

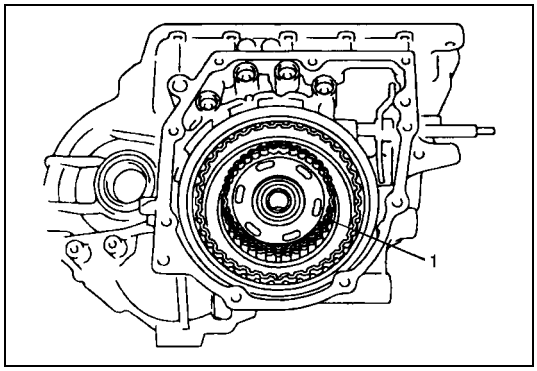

40) Remove forward clutch hub (1).

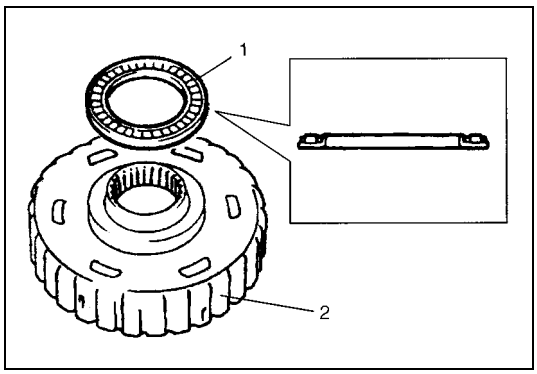

41) Remove rear sun gear thrust bearing (1) from forward clutch hub (2).

NOTE:

If rear sun gear thrust bearing is not found on forward clutch hub, it may have been left in transaxle.

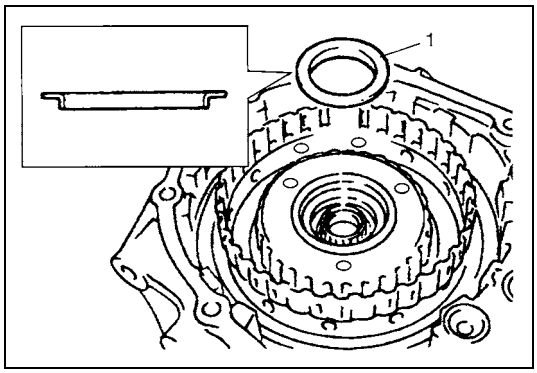

42) Remove rear sun gear thrust bearing race (1).

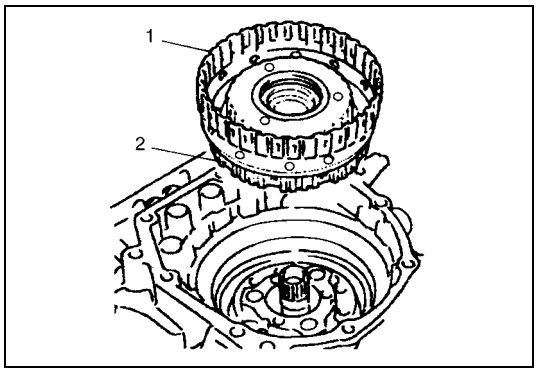

43) Remove rear planetary sun gear subassembly (1) and one-way clutch No.1 assembly (2).

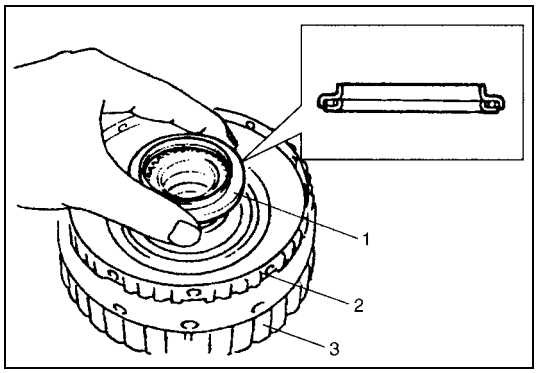

44) Remove planetary gear thrust bearing (1).

NOTE:

If planetary gear thrust bearing is not found on one-way clutch No.1 assembly, it may have been left in trasaxle.

45) Remove one-way clutch No.1 assembly (2) from rear planetary sun gear subassembly (3).

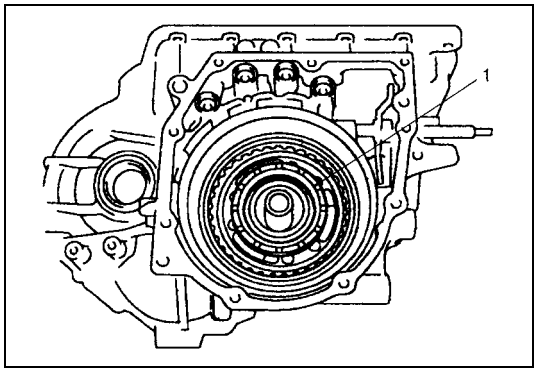

46) Remove planetary carrier thrust washer (1).

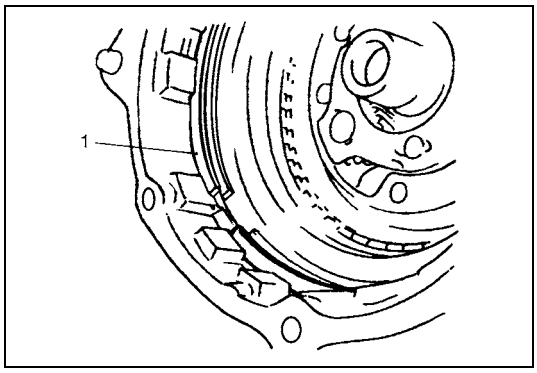

47) Remove O/D and 2nd coast brake retaining plate snap ring (1).

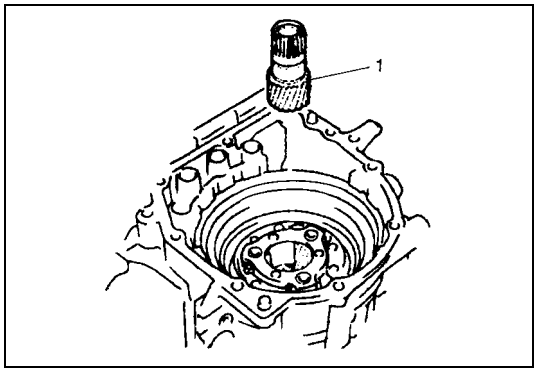

48) Remove front planetary sun gear (1).

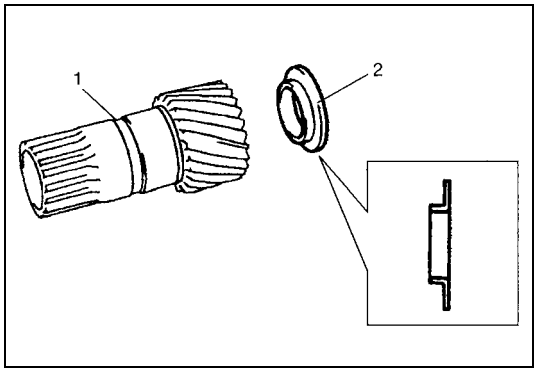

49) Remove front sun gear thrust bearing race (2) from front planetary sun gear (1).

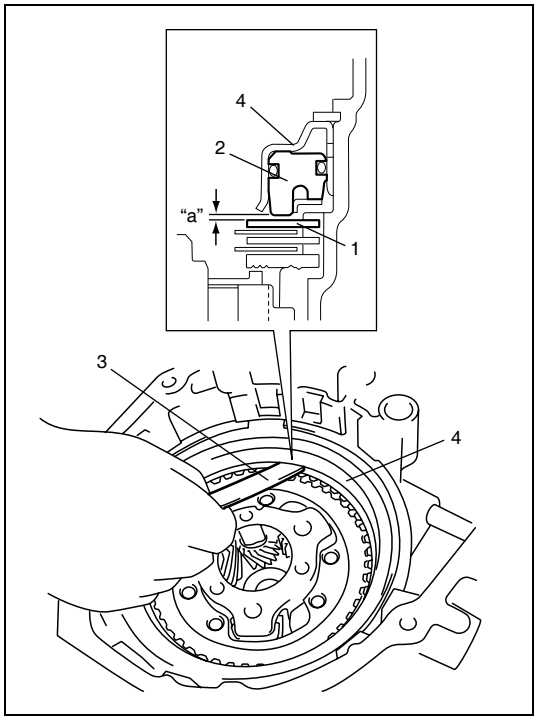

50) Before disassembling 2nd brake piston assembly (4), check 2nd brake piston stroke by measuring clearance between 2nd brake separator plate (1) and piston (2) with feeler gauge (3).
If clearance (piston stroke) is out of specification, replace brake discs and plates with new ones.

2nd brake piston stroke
"a": 0.40 – 1.25 mm (0.016 – 0.049 in.)

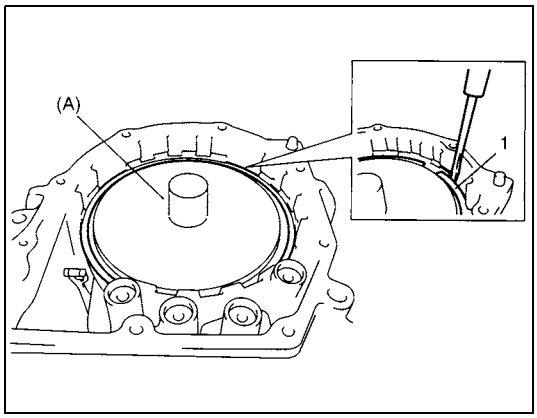

51) Using special tool and hydraulic press, remove 2nd brake piston snap ring (1).

CAUTION:
Do not press 2nd brake piston assembly in over 0.4 mm (0.016 in.).
Excessive compression may cause damage to piston assembly, return spring, plates and/or discs.

Special tool
(A): 09926-96050

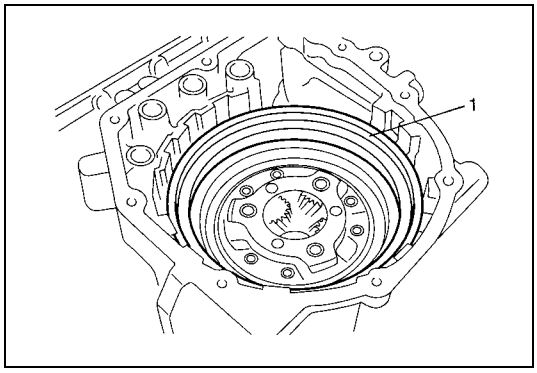

52) Remove 2nd brake piston assembly (1).

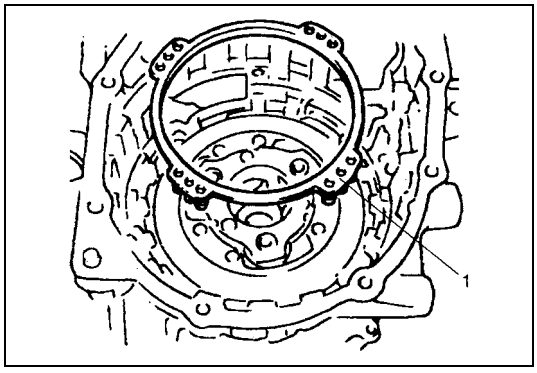

53) Remove 2nd brake return spring subassembly (1).

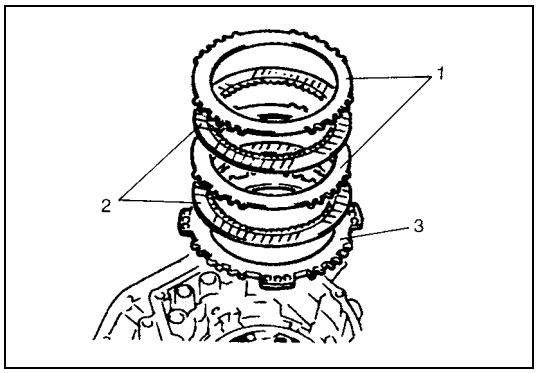

54) Remove 2nd brake separator plates (1) discs (2) and retaining plate (3).

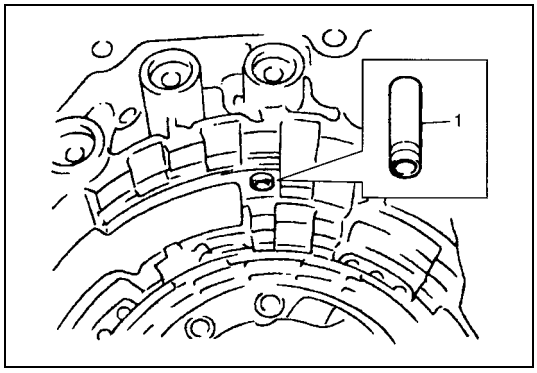

55) Remove brake drum gasket (1).

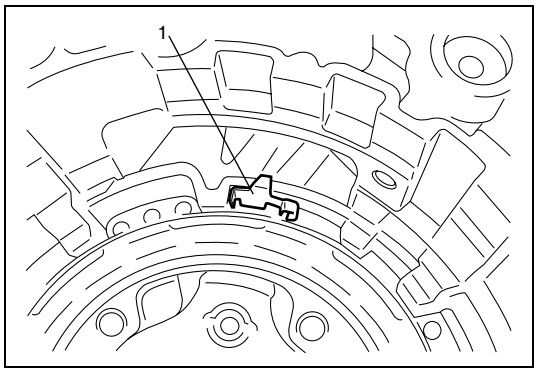

56) Remove one-way clutch outer race retainer (1).

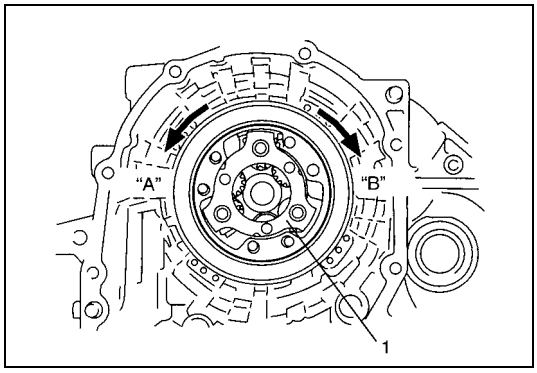

57) Check one-way clutch No.2 as follows.
- Ensure planetary carrier (1) rotates only in counterclockwise direction "A", never in clockwise direction "B".
- If the planetary carrier rotates both ways or does not rotate either way, one-way clutch No.2 assembly will need to be replaced with new one-way clutch No.2 assembly.

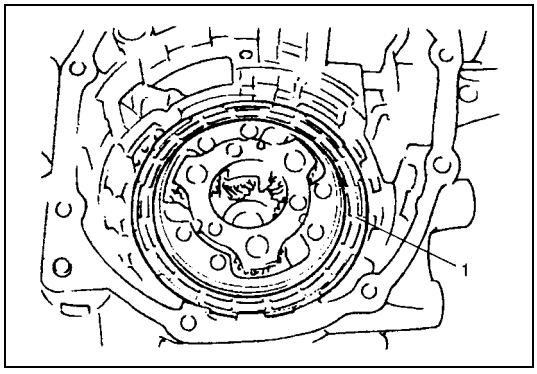

58) Remove one-way clutch No.2 assembly (1).

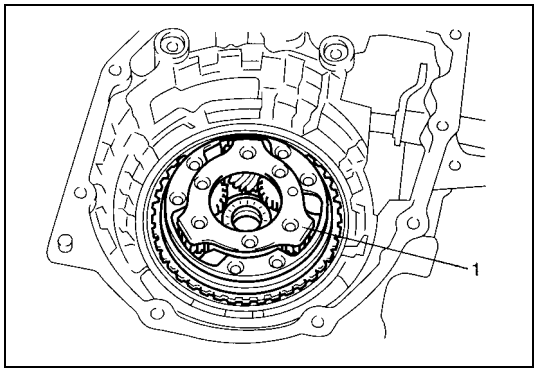

59) Remove planetary gear assembly (1).

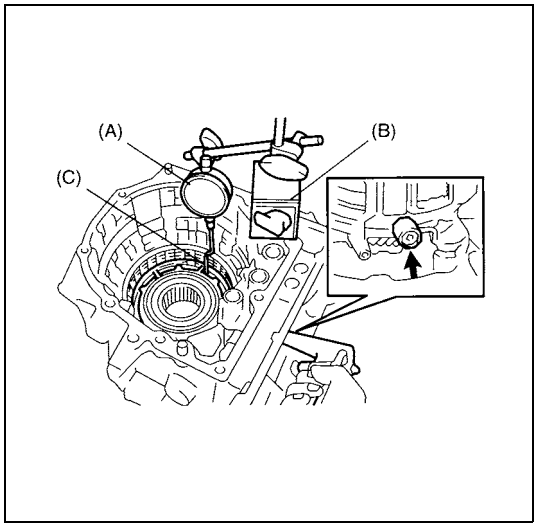

60) Measure 1st and reverse brake piston stroke
- Using special tool, measure 1st and reserve brake piston stroke when compressed air (400 – 800 kPa, 4 – 8 kg/cm^2, 57 – 113 psi) is blown through oil hole.

Special tool
(A): 09900-20607
(B): 09900-20701
(C): 09952-06020

1st and reverse brake piston stroke
Standard: 0.79 – 1.49 mm (0.031 – 0.059 in.)

If piston stroke exceeds specified value, disassemble, inspect and replace discs and plates.

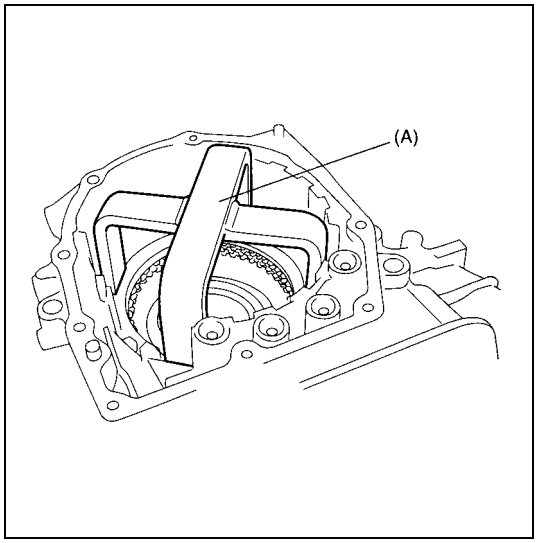

61) Remove snap ring while the 1st and reverse brake piston return springs are compressed using special tool and hydraulic press.

CAUTION:
Do not press 1st and reverse brake return spring subassembly in over 0.8 mm (0.031 in.).
Excessive compression may cause damage to return spring subassembly, discs, plates and/or piston.

Special tool
(A): 09926-97620

62) Remove 1st and reverse brake retaining plate, discs and separator plates.

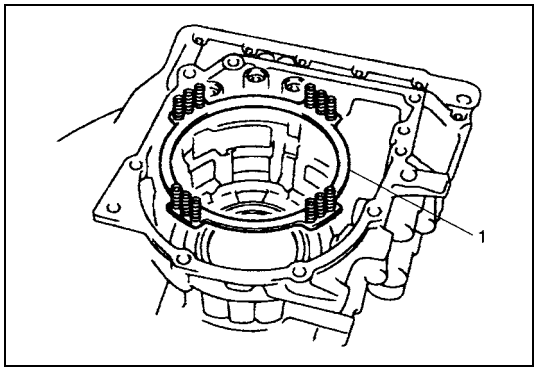

63) Remove 1st and reverse brake return spring subassembly (1).

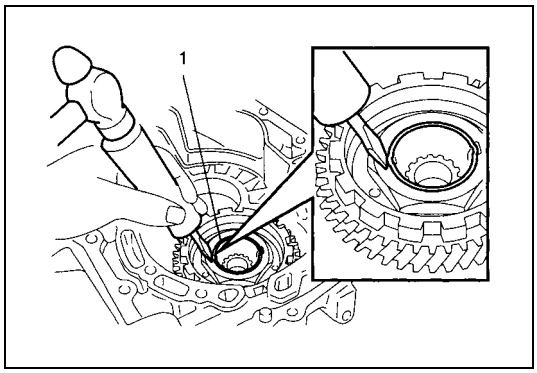

64) Turn over transaxle and uncaulk reduction drive gear nut (1).

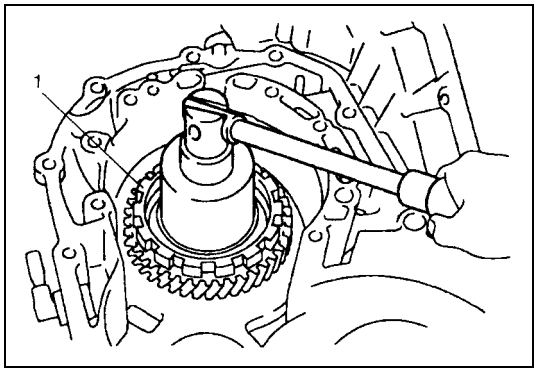

65) Secure reduction drive gear (1) with parking lock pawl, then remove reduction drive gear nut.

CAUTION:
- **It is recommended that this operation should be carried out on rubber mat to prevent damaging transaxle case.**
- **Never reuse removed nut.**

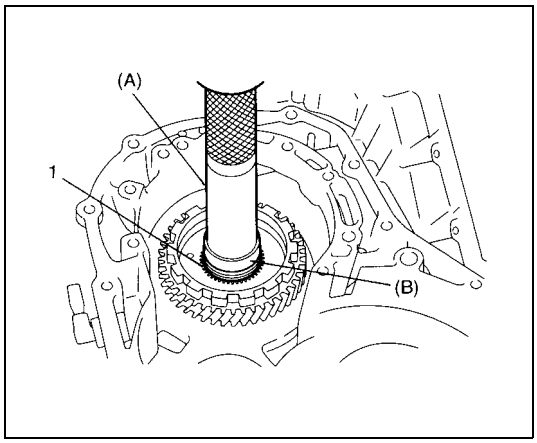

66) Using special tools and hydraulic press, remove planetary ring gear subassembly (1).

Special tool
(A): 09913-84510
(B): 09923-78210

CAUTION:
Do not reuse planetary ring gear subassembly. Otherwise it may cause damage to planetary gear unit and/or reduction gears.

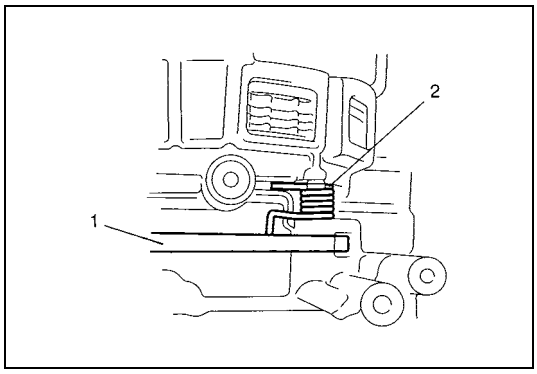

67) Remove parking lock pawl shaft, then spring (2) and parking lock pawl (1).

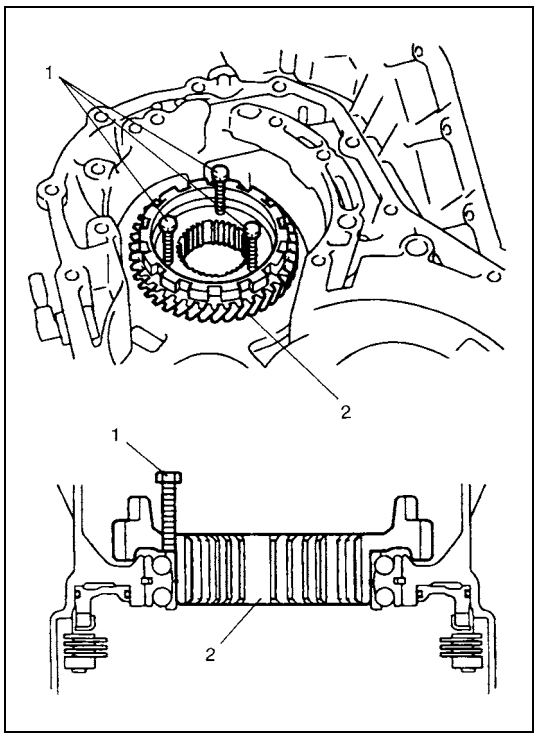

68) Screwing 3 bolts (1), remove reduction drive gear (2).

Bolt	Length
1	30 mm (1.20 in.)

CAUTION:
Screw 3 bolts into reduction drive gear uniformly, or reduction drive gear, bearing and transaxle case may be damaged.

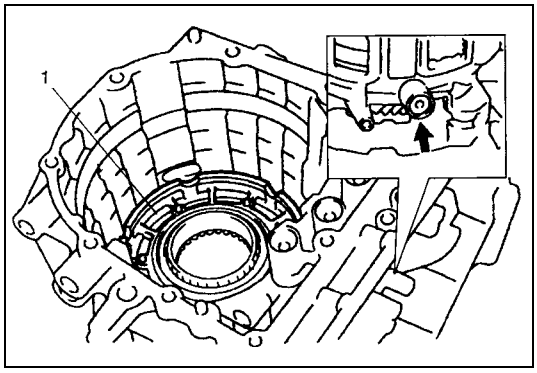

69) Blowing compressed air from oil hole of oil pump, remove 1st and reverse brake piston (1).

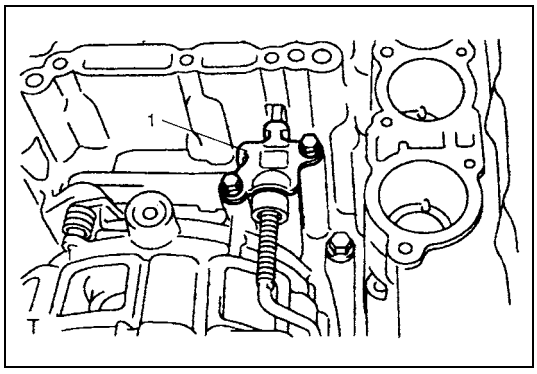

70) Remove parking lock pawl bracket (1).

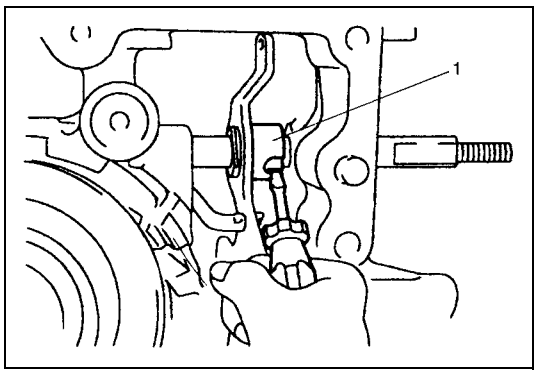

71) With slotted screw driver, cut and unfold manual valve lever spacer (1) and proceed to remove manual valve lever spacer.

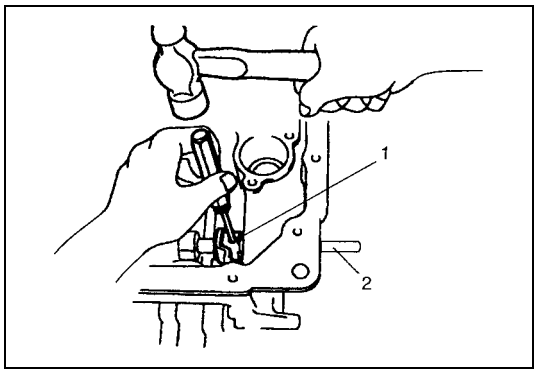

72) Using spring pin remover with 3 mm (0.12 in.) in diameter and hammer, drive out manual valve lever pin (1).
73) Remove manual shift shaft (2).

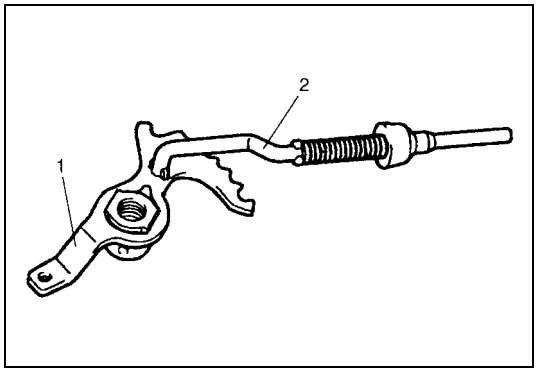

74) Remove parking lock pawl rod (2) from manual valve lever (1).

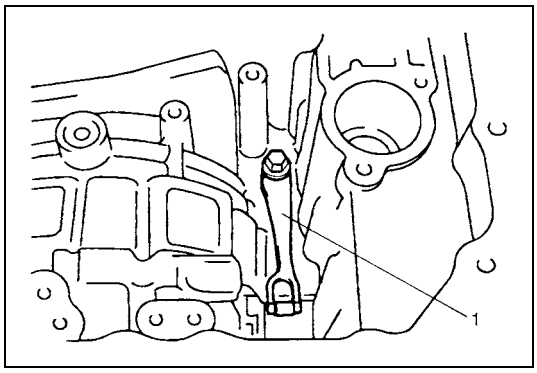

75) Remove manual detent spring (1).

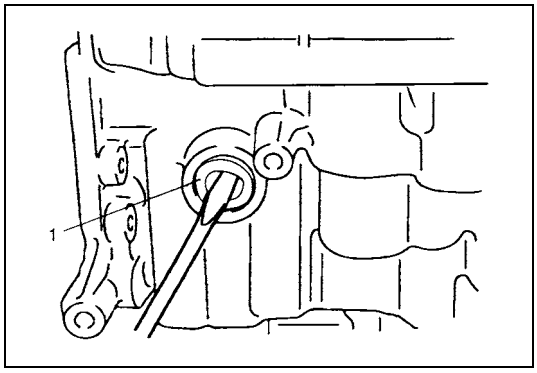

76) Remove manual shift shaft oil seal (1).

Inspection

Brake Discs

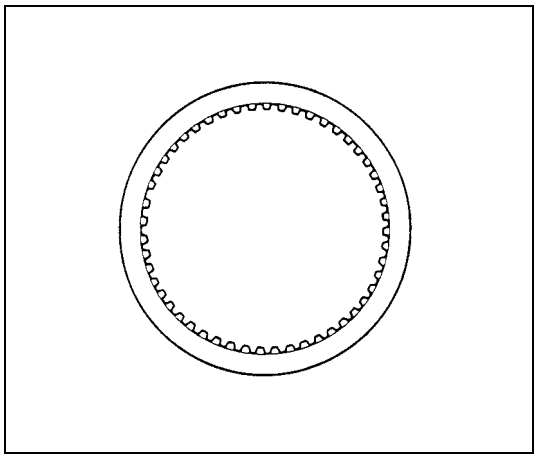

Dry and inspect them for pitting, burn flaking, significant wear, glazing, cracking, charring and chips or metal particles imbedded in lining.
If discs show any of the above conditions, replacement is required.

NOTE:

- **If disc lining is exfoliated or discolored, replace all discs.**
- **Before assembling new discs, soak them in A/T fluid for at least two hours.**

Brake Separator Plates and Retaining Plates

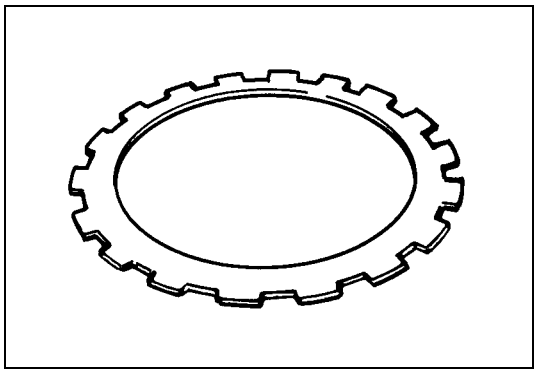

Dry plates and check for discoloration. If plate surface is smooth and even color smear is indicated, plate should be reused. If severe heat spot discoloration or surface scuffing is indicated, plate must be replaced.

Brake Return Spring Subassembly

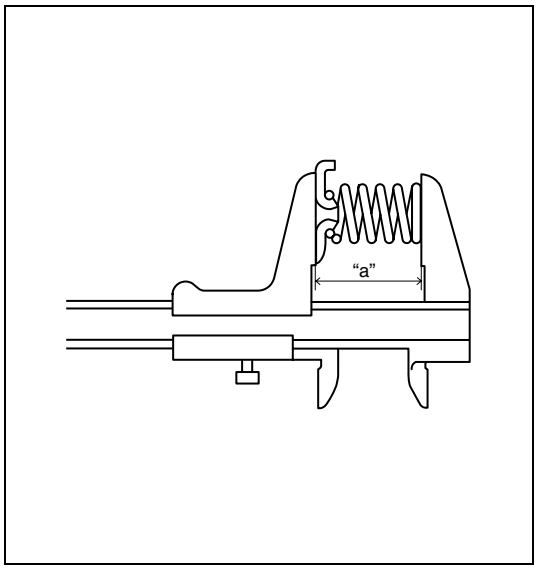

Measure brake return springs.

Free length of 1st & reverse brake return spring "a": 21.71 mm (0.855 in.)

Free length of 2nd brake return spring "a": 15.85 mm (0.624 in.)

NOTE:

- **Do not apply excessive force when measuring spring free length**
- **Perform measurement at several points.**

Evidence of extreme heat or burning in the area of clutch may have caused springs to take heat set and would require their replacement.

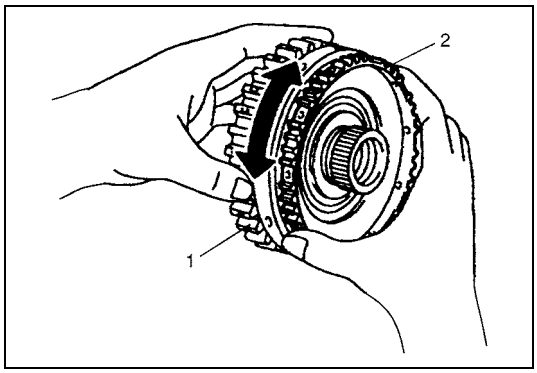

One-way Clutch No.1 Assembly

1) Install one-way clutch No.1 assembly (2) to rear planetary sun gear subassembly (1).
2) Securing rear planetary sun gear subassembly, ensure that one-way clutch No.1 assembly rotates only in one direction. If the one-way clutch rotates in both directions or it does not rotate in either direction, replace it with new one.

Disassembly/Assembly of Subassembly

CAUTION:

- **Keep component parts in group for each subassembly and avoid mixing them up.**
- **Clean all parts with cleaning solvent thoroughly and air dry them.**
- **Use kerosene or automatic transaxle fluid as cleaning solvent.**
- **Do not use wiping cloths or rags to clean or dry parts.**
- **All oil passages should be blown out and checked to make sure that they are not obstructed.**
- **Keep face and eyes away from solvent spray while air blowing parts.**
- **Check mating surface for irregularities and remove them, if any, and clean it again.**
- **Soak new clutch discs and brake discs in transaxle fluid for at least 2 hours before assembly.**
- **Replace all gaskets and O-ring with new ones.**
- **Apply automatic transaxle fluid to all O-rings.**
- **When installing seal ring, be careful so that it is not expanded excessively, extruded or caught.**
- **Replace oil seals that are removed and apply grease to their lips.**
- **Before installing, be sure to apply automatic transaxle fluid to sliding, rolling and thrusting surface of all component part. Also after installation, make sure to check each part for proper operation.**
- **Always use torque wrench when tightening bolts.**

Oil pump assembly

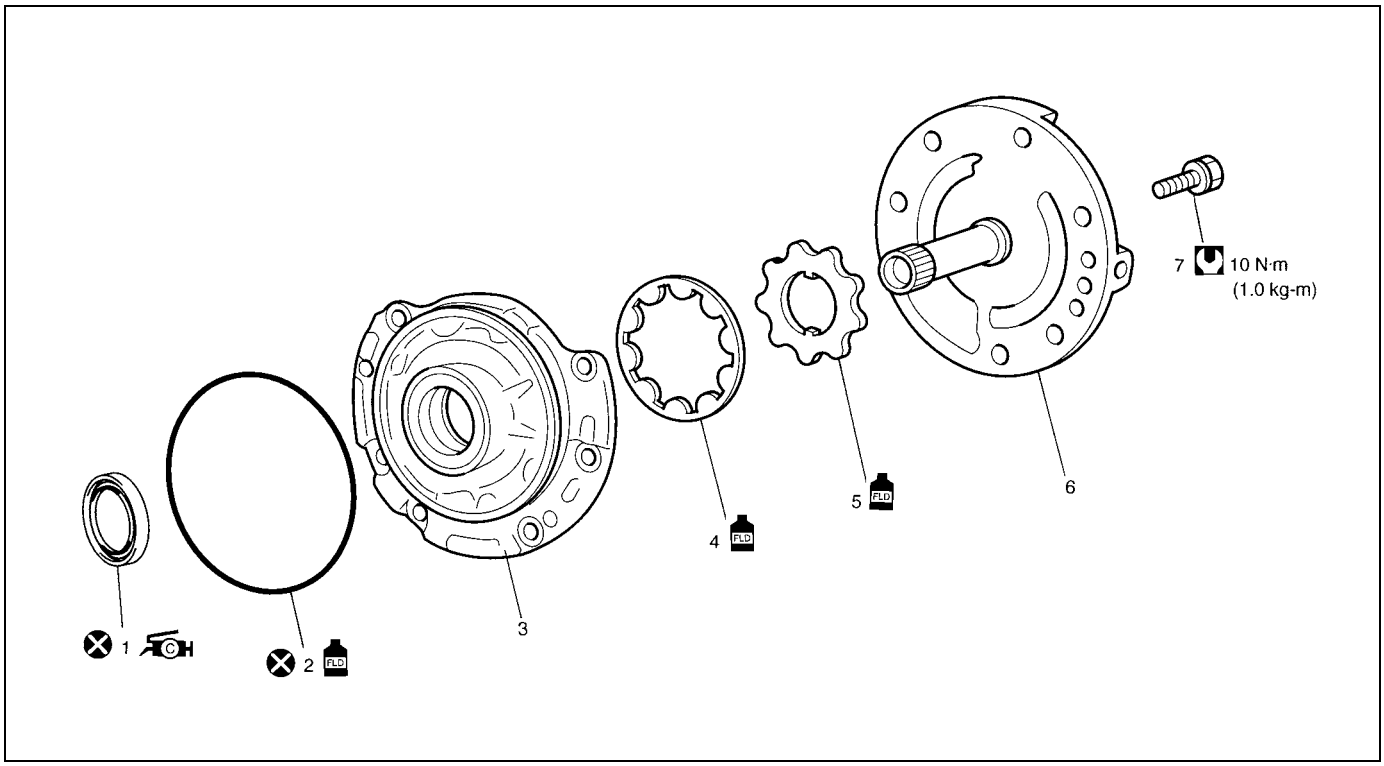

1. Oil seal : Apply grease 99000-25030 to oil seal lip.	7. Oil pump subassembly bolts
2. O-ring	Apply automatic transaxle fluid.
3. Oil pump body	Tightening torque
4. Oil pump driven gear	Do not reuse.
5. Oil pump drive gear	
6. Stator shaft assembly	

Disassembly

1) Remove O-ring from pump body.
2) Remove 8 oil pump subassembly bolts (1) and stator shaft assembly (2).

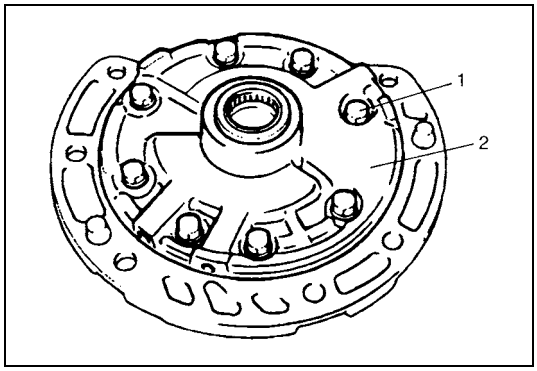

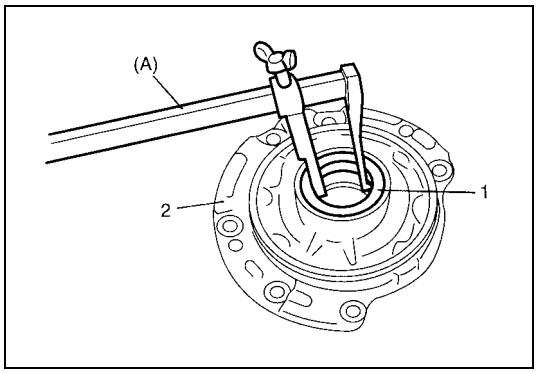

3) Remove oil seal (1) using special tool.

Special tool
(A): 09913-50121

2. Oil pump body

Inspection

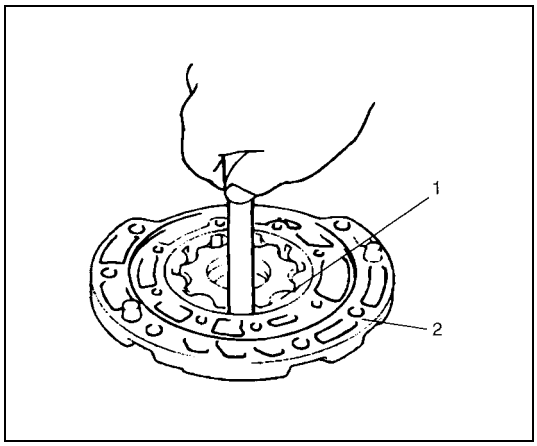

1) Check body clearance of driven gear.
Push driven gear to one side of body Using feeler gauge, measure clearance between driven gear and body.
If clearance exceeds its standard value, replace oil pump assembly.

Clearance between oil pump driven gear and oil pump body
Standard: 0.1 – 0.17 mm (0.0039 – 0.0067 in.)

1. Oil pump driven gear
2. Oil pump body

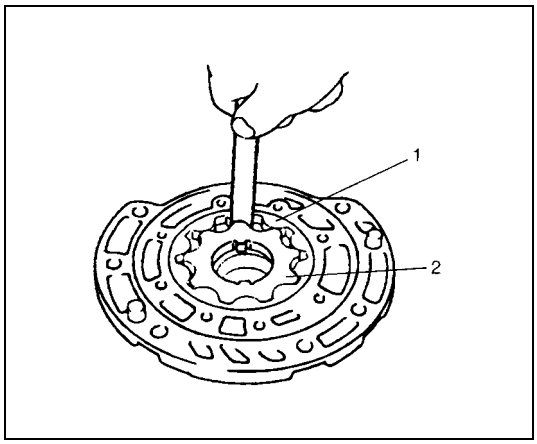

2) Check tip clearance between drive and driven gear.
Using a feeler gauge, measure clearance between drive and driven gear tips.
If clearance exceeds its standard value, replace oil pump assembly.

Tip clearance between oil pump drive gear and oil pump driven gear
Standard: 0.07 – 0.15 mm (0.0028 – 0.0059 in.)

1. Oil pump driven gear
2. Oil pump drive gear

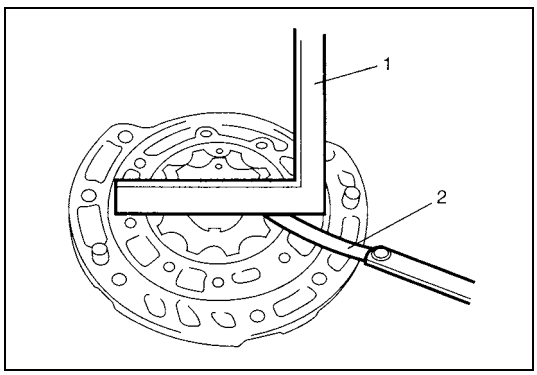

3) Check side clearance of both gears.
Using straightedge (1) and feeler gauge (2), measure side clearance between gears and pump body.
If clearance exceeds its standard value, replace oil pump assembly.

Side clearance between gears and oil pump body
Standard: 0.02 – 0.05 mm (0.0008 – 0.0019 in.)

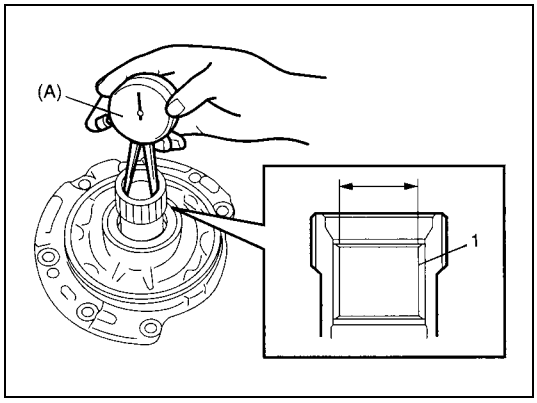

4) Using special tool, measure stator shaft bush bore.
If measured stator shaft bush bore is out of specifications, replace oil pump assembly with new one.

Special tool
(A): 09900-20605

Stator shaft bush bore
Standard: 18.424 – 18.450 mm (0.7254 – 0.7264 in.)

1. Stator shaft bush

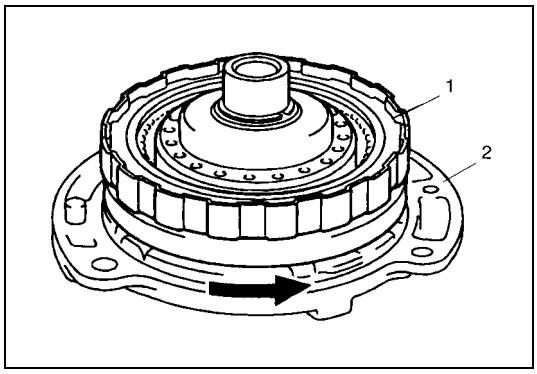

5) Install direct clutch assembly (1) to stator shaft assembly (2), then ensure that direct clutch assembly turns smoothly.
If unsmooth rotation or noise are found in oil pump assembly, replace oil pump assembly with new one. This check should also be done to input shaft assembly and replace input shaft assembly if necessary.

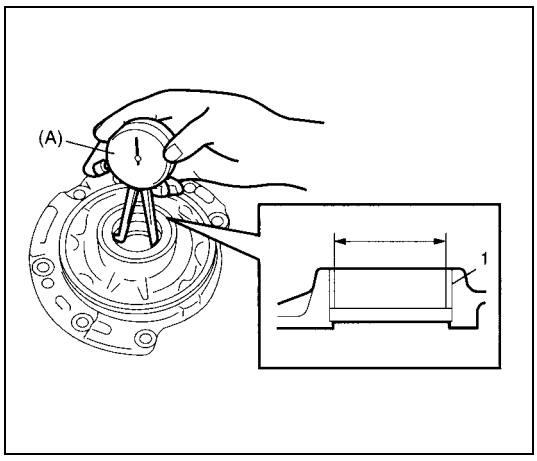

6) Using special tool, measure oil pump body bush bore.

Special tool
(A): 09900-20605

Oil pump body bush bore
Standard: 38.113 – 38.138 mm (1.5005 – 1.5015 in.)

If measured oil pump body bush bore is out of specifications, replace oil pump assembly with new one. Torque converter also needs to be checked. Replace torque converter, if necessary.

1. Oil pump body bush

Assembly

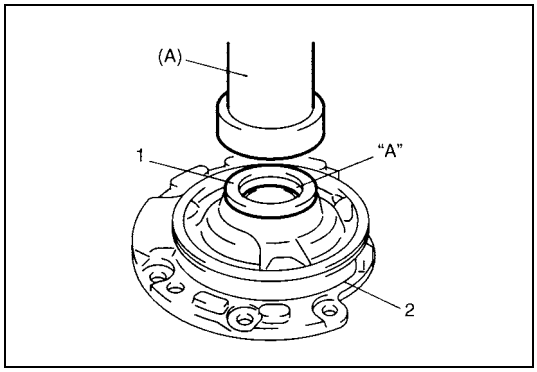

1) Install new oil pump body oil seal (1).
Use special tool and hammer to install it, and then apply grease to its lip.

Special tool
(A): 09913-85210

"A": Grease 99000-25030

1. Oil pump body

2) Install driven gear and drive gear to oil pump body after applying A/T fluid.

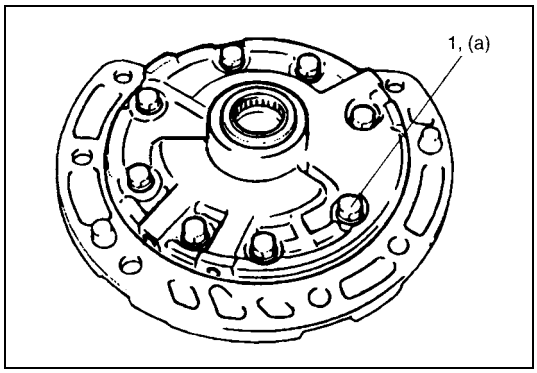

3) Install stator shaft assembly to oil pump body and tighten 8 pump subassembly bolts (1) to specification.

Tightening torque
Oil pump subassembly bolts
(a): 10 N·m (1.0 kg-m, 7.5 lb-ft)

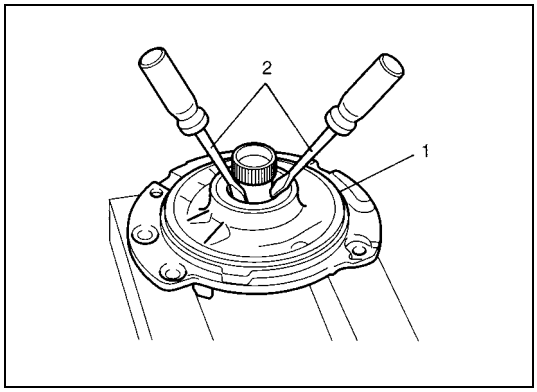

4) After applying A/T fluid to new O-ring, install it to oil pump body.

CAUTION:
Do not damage oil seal with slotted screw driver.

5) Check drive gear for smooth rotation by using slotted screw driver.

1. Oil pump assembly
2. Slotted screw driver

Direct clutch assembly

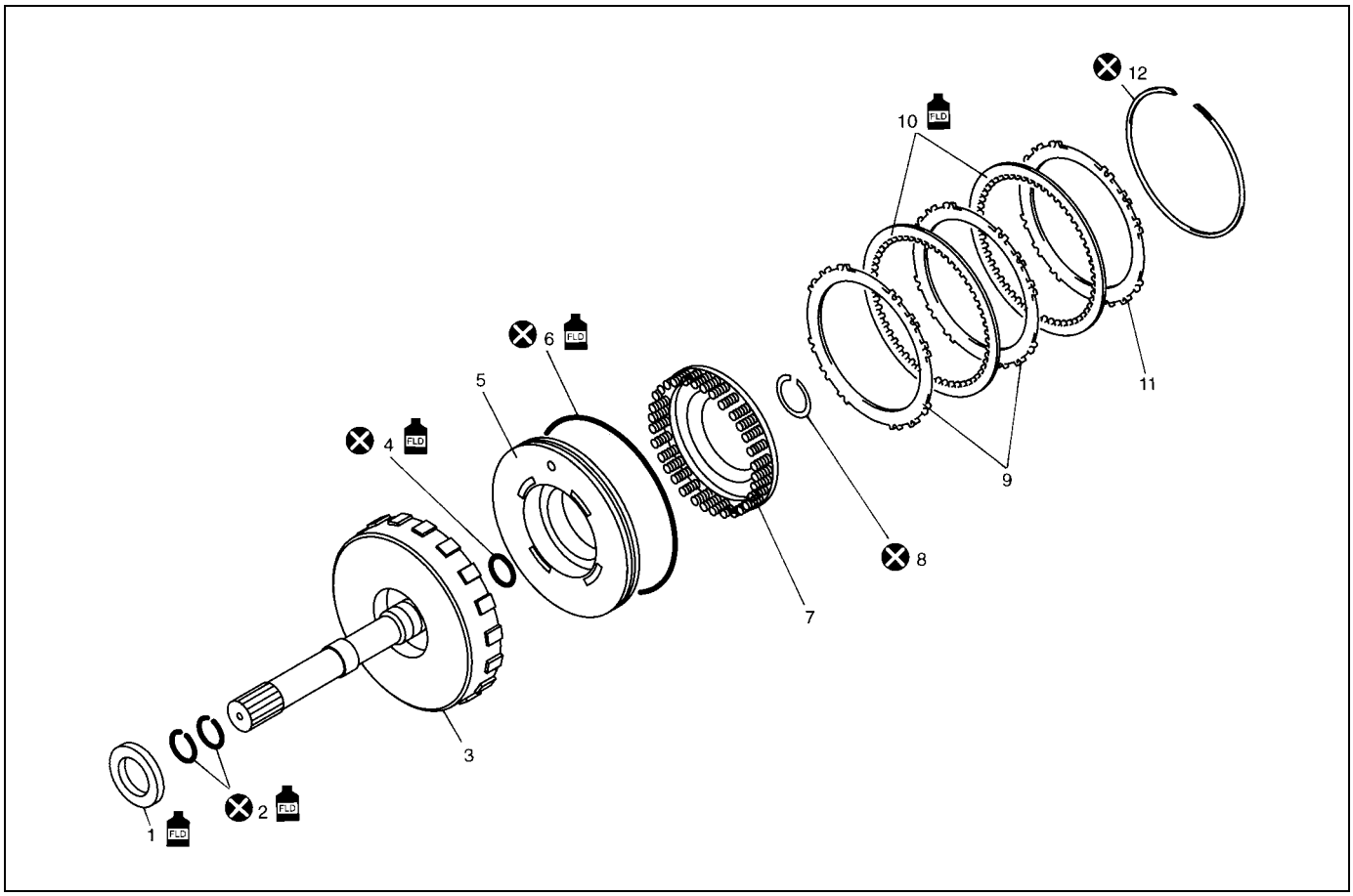

1. Input shaft front thrust bearing	8. Shaft snap ring
2. Input shaft seal ring	9. Direct clutch separator plate
3. Input shaft subassembly	10. Direct clutch disc
4. Inner O-ring	11. Direct clutch retaining plate
5. Direct clutch piston	12. Plate snap ring
6. Outer O-ring	FLD Apply automatic transaxle fluid.
7. Direct clutch return spring subassembly	⊗ Do not reuse.

Preliminary Check

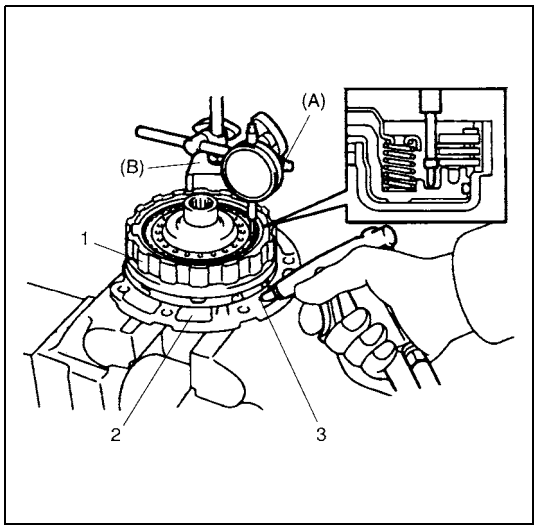

1) Install direct clutch assembly (1) to oil pump assembly (2), blow in air (400 – 800 kPa, 4 – 8 kg/cm^2, 57 – 113 psi) through oil hole (3) of oil pump assembly with special tool attached on upper surface of direct clutch piston, and measure piston stroke of direct clutch.

Special tool
(A): 09900-20607
(B): 09900-20701

Direct clutch piston stroke: 0.4 – 0.7 mm (0.016 – 0.027 in.)

If piston stroke exceeds specified value, disassemble, inspect and replace inner parts.

Disassembly

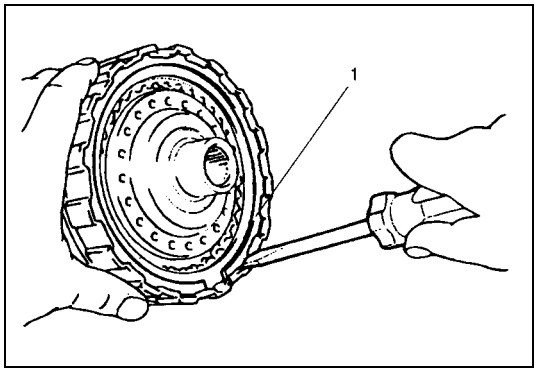

1) Remove plate snap ring (1), then remove direct clutch retaining plate, discs and separator plates.

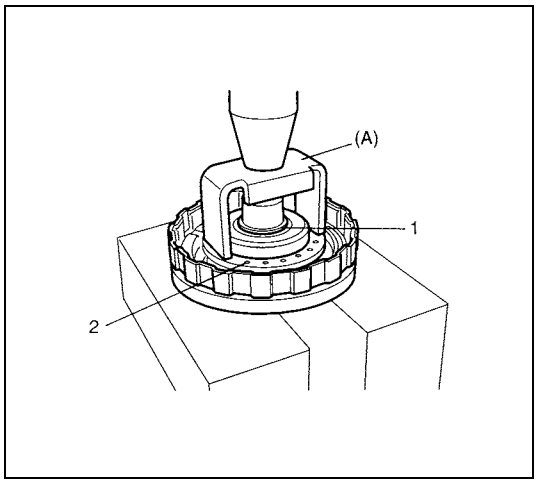

2) Using special tool and hydraulic press, remove shaft snap ring (1).

CAUTION:
Do not press direct clutch return spring subassembly in over 0.7 mm (0.027 in.).
Excessive compression may cause damage to direct clutch return spring subassembly and/or piston.

Special tool
(A): 09926-98310

3) Remove direct clutch return spring assembly (2).

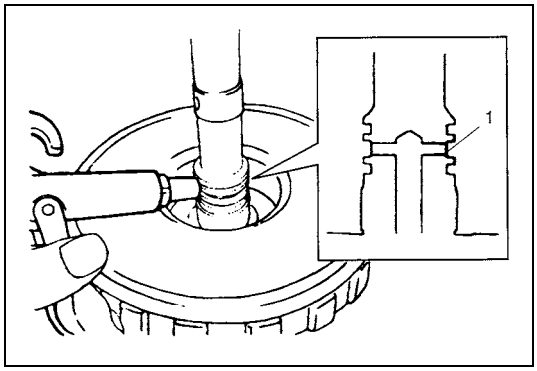

4) Using a finger to block oil hole (1), apply compressed air (400 – 800 kPa, 4 – 8 kg/cm^2, 57 – 113 psi) to opposite hole, which will assist in removal of the clutch piston.

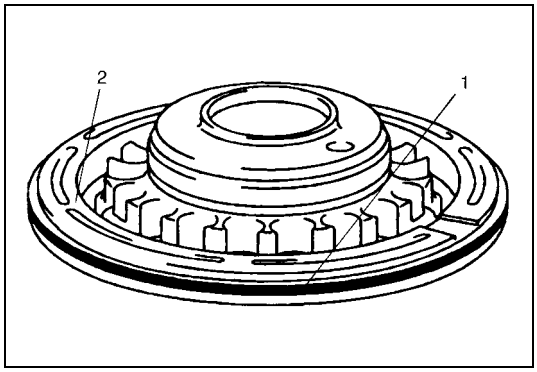

5) Remove outer O-ring (1).

2. Direct clutch piston

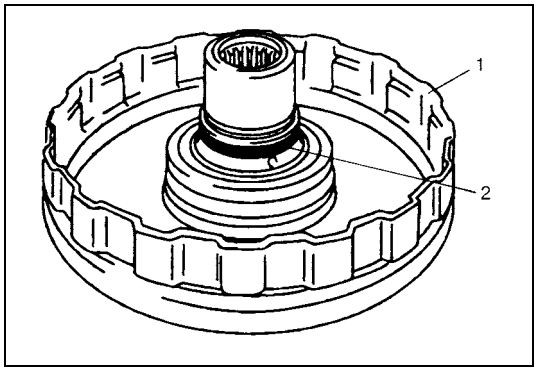

6) Remove inner O-ring (2).

1. Input shaft subassembly

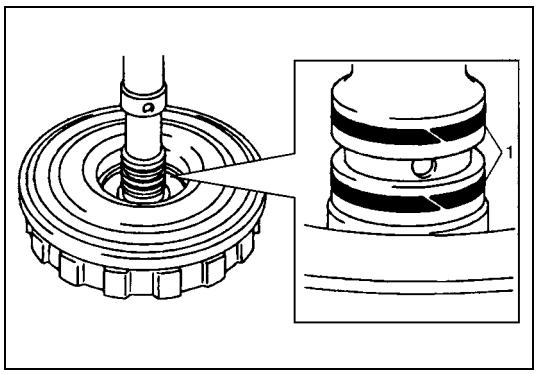

7) Remove input shaft seal rings (1).

Inspection

Clutch Discs, Plates and Retaining Plate

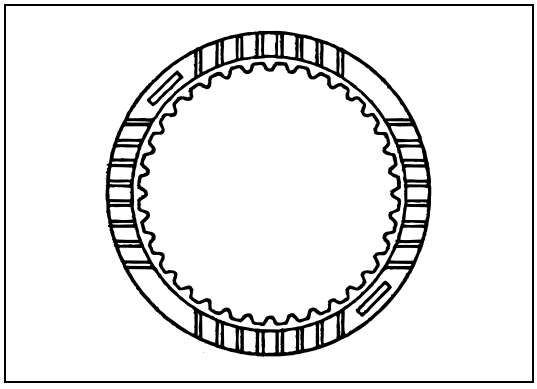

Check that sliding surfaces of discs, separator plates and retaining plate are not worn hard or burnt. If necessary, replace.

NOTE:

- **If disc lining is exfoliated or discolored, replace all discs.**
- **Before assembling new discs, soak them in A/T fluid for at least two hours.**

Direct Clutch Return Spring Subassembly

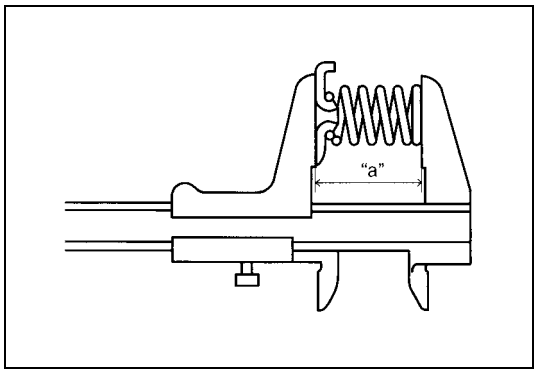

Measure free length of direct clutch return spring.

Free length of direct clutch return spring
"a": 36.04 mm (1.419 in.)

NOTE:

- **Do not apply excessive force when measuring spring free length.**
- **Perform measurement at several points.**

Direct Clutch Piston

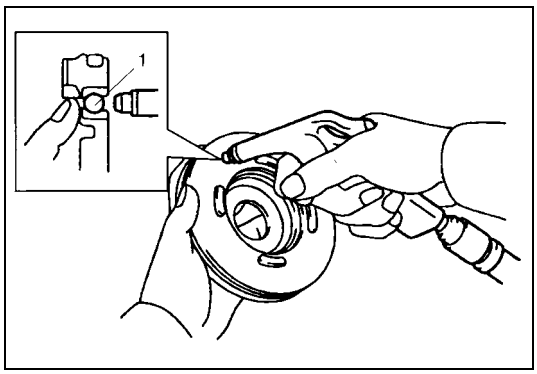

Shake direct clutch piston lightly and check that check ball (1) is not stuck. Blow in low-pressure air (Max 100 kPa, 1 kg/cm^2, 15 psi) to check ball to check that there is no air leakage.

Assembly

Reverse disassembly procedure for assembly, noting the following points.

- Use new seal ring and O-ring. Apply A/T fluid before installation.

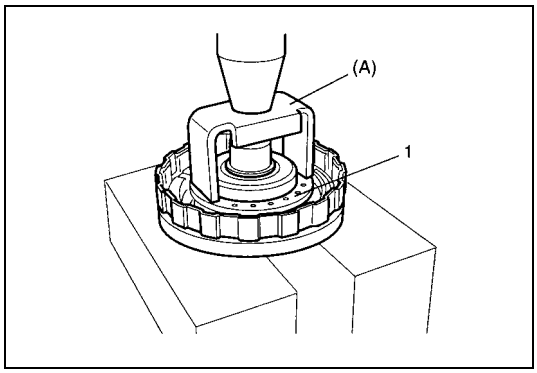

- Do not damage direct clutch return spring subassembly (1) and piston by pressing in direct clutch return spring subassembly passing through its original installing position over 0.7 mm (0.027 in.).

Special tool
(A): 09926-98310

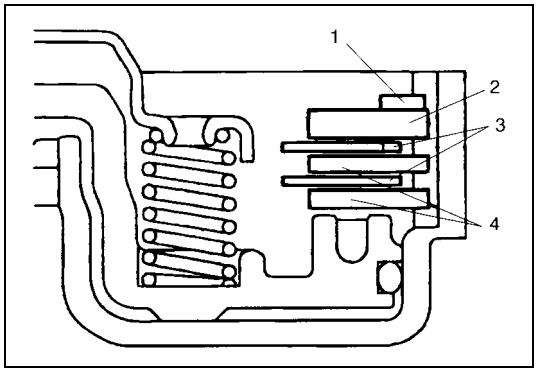

- Apply A/T fluid to direct clutch separator plates (4), discs (3) and retaining plate (2).
- Install direct clutch separator plates (4) discs (3) retaining plate (2) and snap ring (1) to input shaft subassembly.

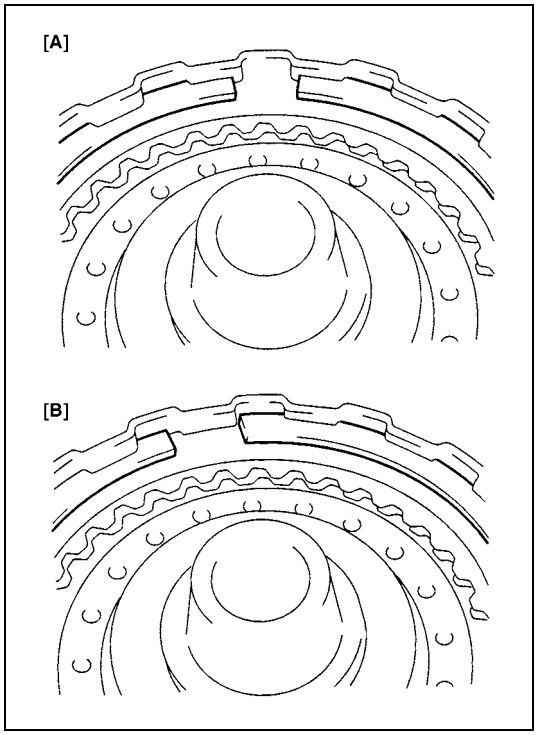

- Install plate snap ring so that its both ends would be positioned in correct locations as shown in figure.

[A] Correct
[B] Incorrect

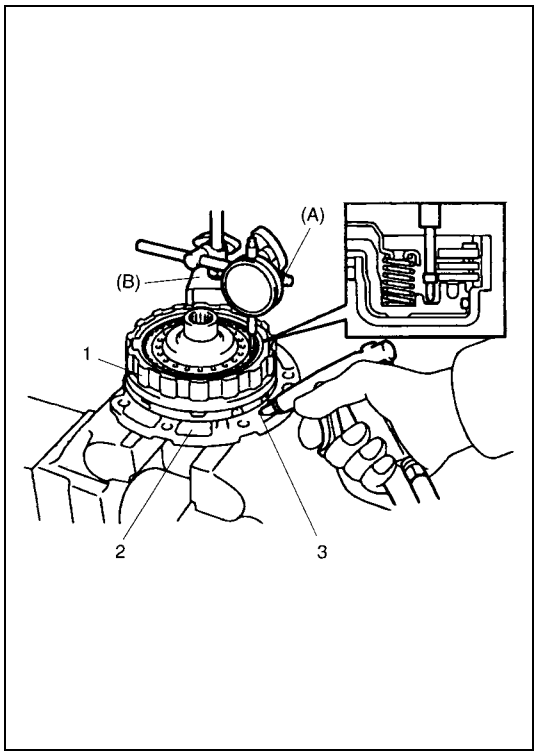

- After assembly, measure direct clutch piston stroke.

Special tool
(A): 09900-20607
(B): 09900-20701

Direct clutch piston stroke: 0.4 – 0.7 mm (0.016 – 0.027 in.)

When piston strike is out of specification, select direct clutch retaining plate with suitable thickness from among the list below and replace it.

Available direct clutch retaining plate thickness

Thickness	Identification mark
2.8 mm	4
3.0 mm (0.118 in.)	1
3.2 mm (0.126 in.)	2
3.4 mm (0.134 in.)	3

1. Direct clutch assembly
2. Oil pump assembly
3. Oil hole

Forward and reverse clutch assembly

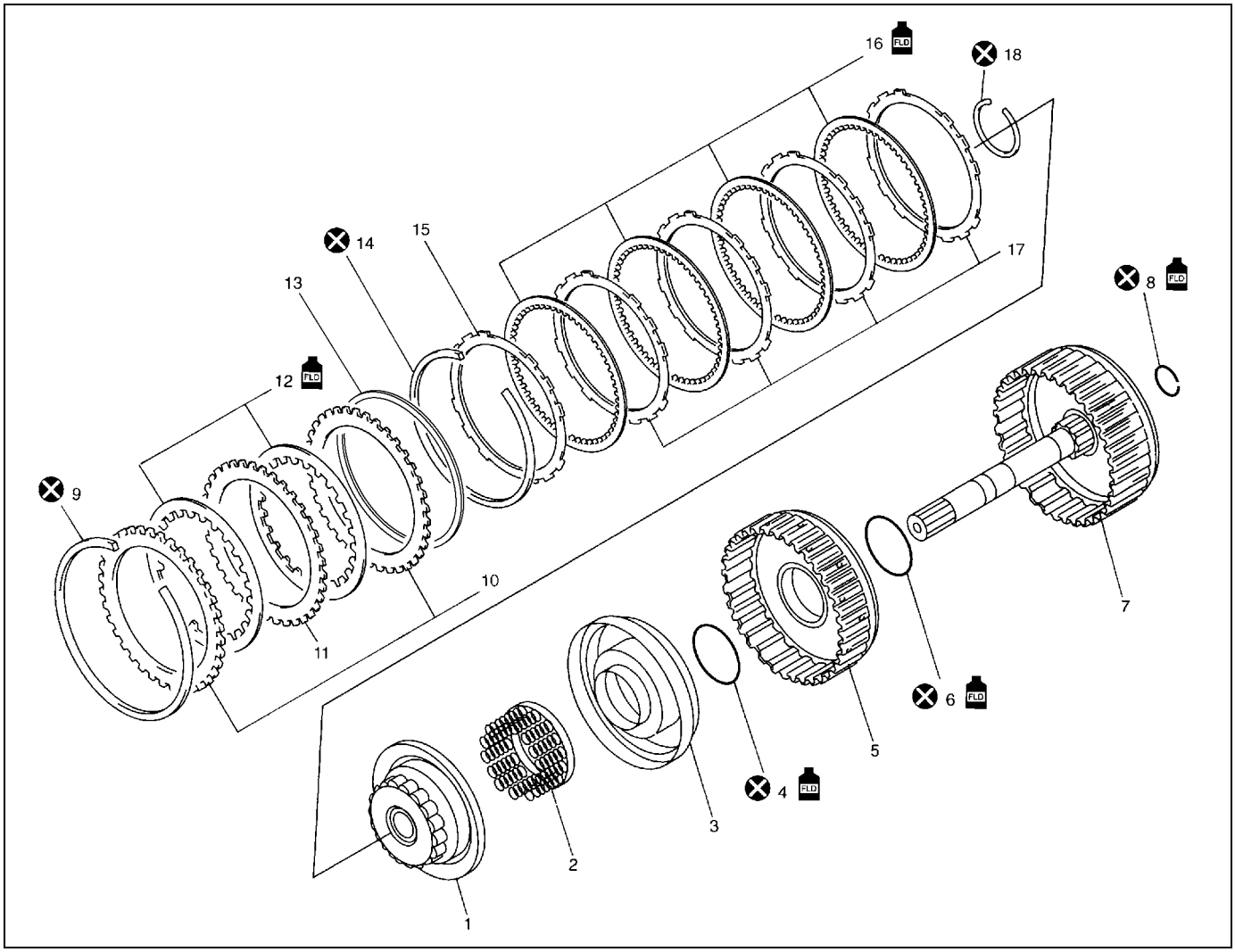

1. Forward clutch balancer	11. Reverse clutch separator plate
2. Forward clutch return spring subassembly	12. Reverse clutch disc
3. Forward clutch piston	13. Reverse clutch cushion plate
4. Forward clutch piston O-ring	14. Forward clutch plate snap ring
5. Forward clutch drum	15. Forward clutch retaining plate
6. Forward clutch drum O-ring	16. Forward clutch disc
7. Intermediate shaft subassembly	17. Forward clutch separator plate
8. Inter mediate shaft seal ring	18. Balancer snap ring
9. Reverse clutch plate snap ring	FLD Apply automatic transaxle fluid.
10. Reverse clutch retaining plate	⊗ Do not reuse.

Preliminary Check

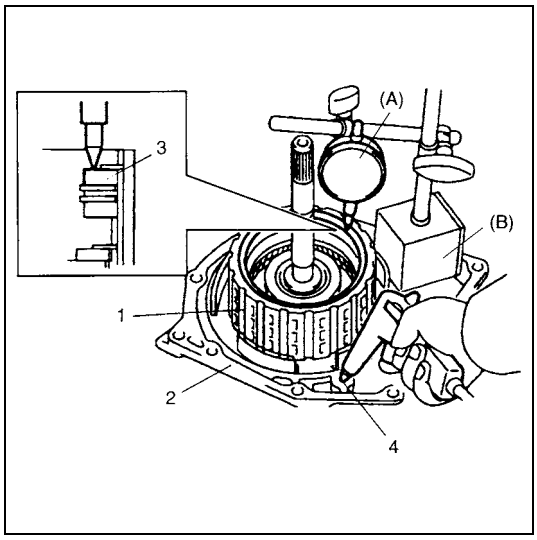

1) Install forward and reverse clutch assembly (1) to transaxle rear cover (2), blow in compressed air (400 – 800 kPa, 4 – 8 kg/cm^2, 57 – 113 psi) through oil hole (4) of transaxle rear cover with the special tool attached on the upper surface of reverse clutch retaining plate (3), and measure reverse clutch piston stroke.
   If piston stroke exceeds specified value, disassemble, inspect and replace inner parts.

Special tool
(A): 09900-20607
(B): 09900-20701

Reverse clutch piston stroke: 1.20 – 1.60 mm (0.047 – 0.063 in.)

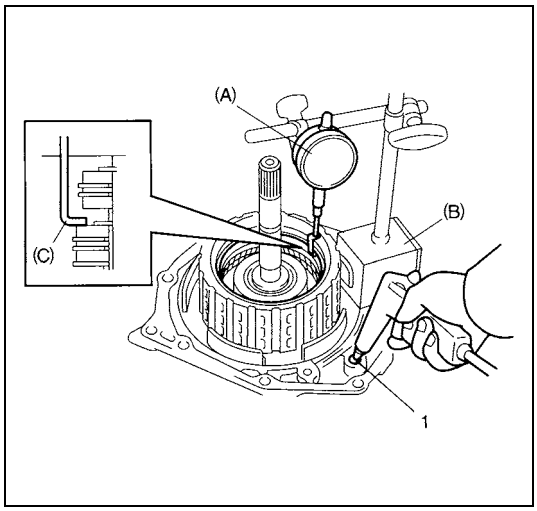

2) Blow compressed air (400 – 800 kPa, 4 – 8 kg/cm^2, 57 – 113 psi) through oil hole (1) of transaxle rear cover with the special tool attached on the upper surface of forward clutch retaining plate, and measure forward clutch piston stroke.
   If piston stroke exceeds specified value, disassemble, inspect and replace inner parts.

Special tool
(A): 09900-20607
(B): 09900-20701
(C): 09952-06020

Forward clutch piston stroke: 1.30 – 1.50 mm (0.051 – 0.059 in.)

Disassembly

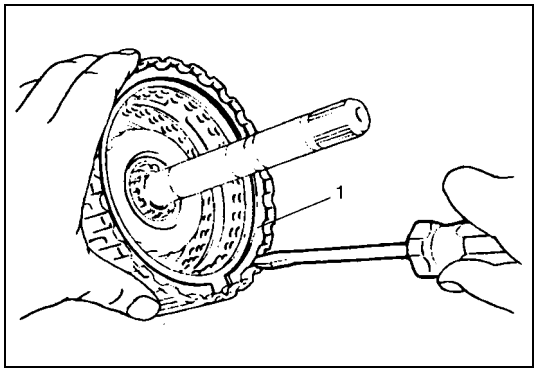

1) Remove reverse clutch plate snap ring (1) and take out reverse clutch retaining plate, discs, separator plates and reverse clutch cushion plate from intermediate shaft subassembly.

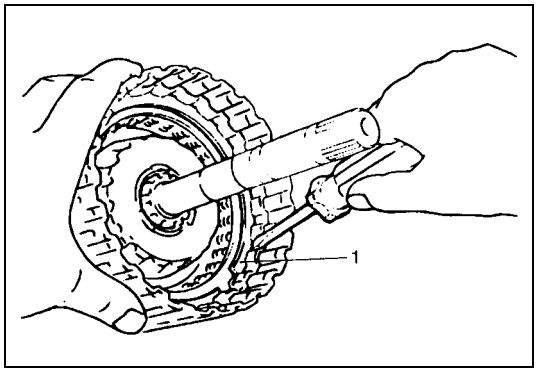

2) Remove forward clutch plate snap ring (1) and take out forward clutch retaining plate, discs and separator plates from forward clutch drum.

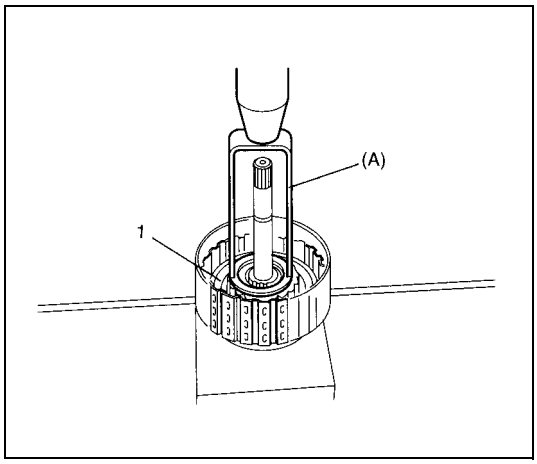

3) Remove balancer snap ring by using special tool and hydraulic press.

CAUTION:
Do not press forward clutch return spring subassembly in over 1.5 mm (0.059 in.).
Excessive compression may cause damage to return spring subassembly and/or balancer.

Special tool
(A): 09926-97610

4) Remove forward clutch balancer (1).

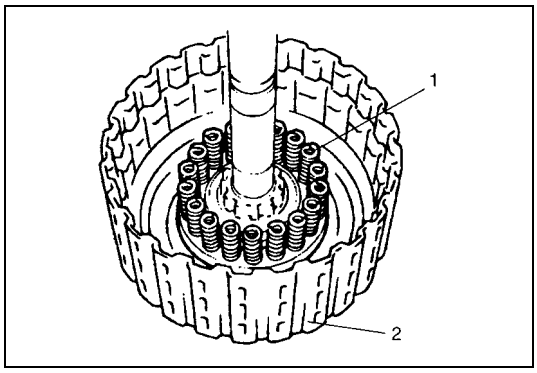

5) Remove forward clutch return spring subassembly (1).

2. Intermediate shaft subassembly

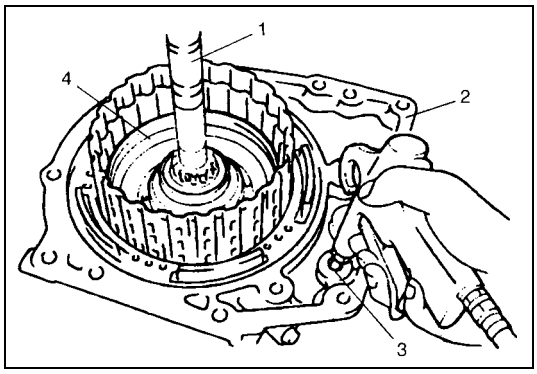

6) Install intermediate shaft subassembly (1) to transaxle rear cover (2). Apply compressed air (400 – 800 kPa, 4 – 8 kg/cm^2, 57 – 113 psi) to oil hole (3) of transaxle rear cover to remove forward clutch piston (4).

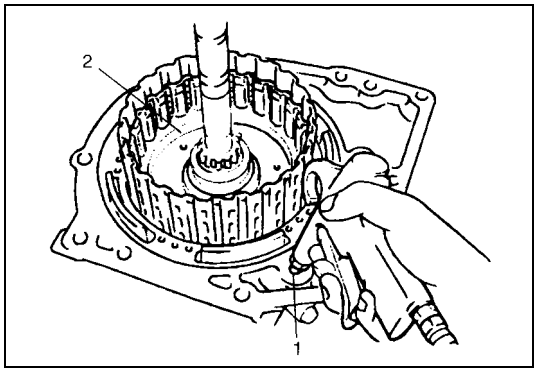

7) Apply compressed air (400 – 800 kPa, 4 – 8 kg/cm^2, 57 – 113 psi) to oil hole (1) of transaxle rear cover to remove forward clutch drum (2).

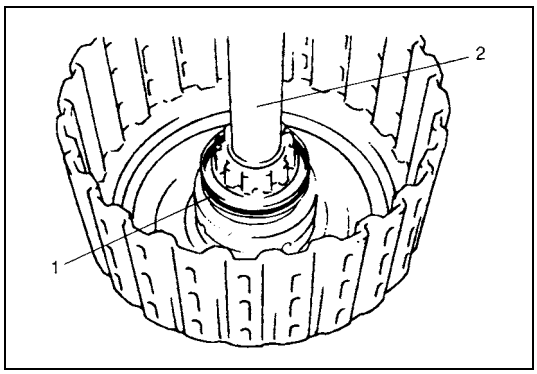

8) Remove forward clutch piston O-ring (1) from intermediate shaft subassembly (2).

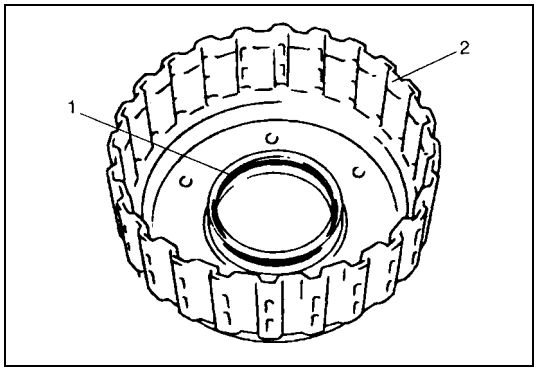

9) Remove forward clutch drum O-ring (1) from forward clutch drum (2).

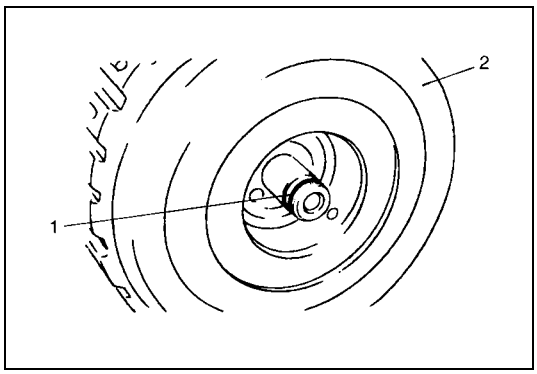

10) Remove intermediate shaft seal ring (1) from intermediate shaft subassembly (2).

Inspection

Clutch Discs, Separator Plates and Retaining Plate

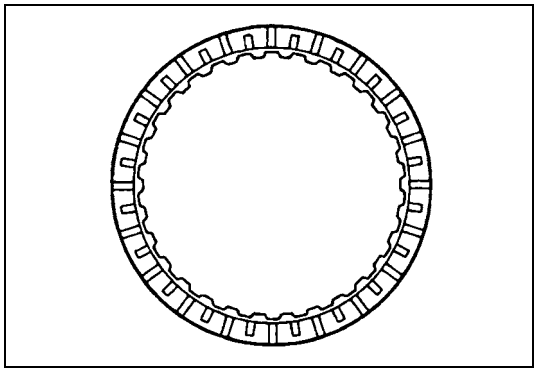

Check that sliding surfaces of discs, separator plates and retaining plate are not worn hard or burnt. If necessary, replace.

NOTE:

- **If disc lining is exfoliated or discolored, replace all discs.**
- **Before assembling new discs, soak them in A/T fluid for at least two hours.**

Forward Clutch Return Spring Subassembly

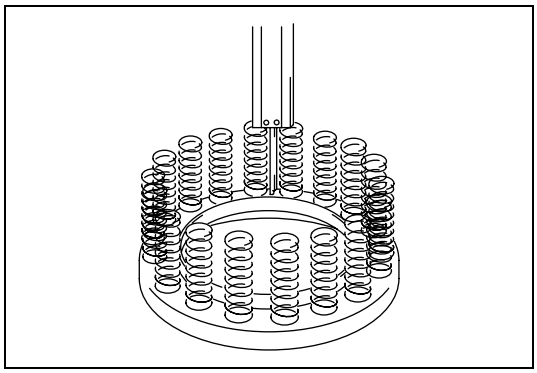

Measure free length of forward clutch return spring.

Free length of forward clutch return spring:
24.04 mm (0.946 in.)

NOTE:

- **Do not apply excessive force when measuring spring free length.**
- **Perform measurement at several points.**

Forward Clutch Piston Lip and Forward Clutch Balancer Lip

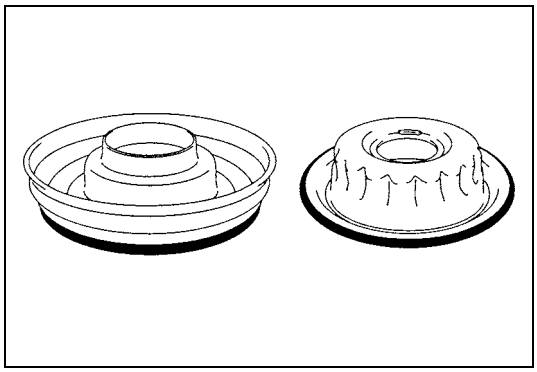

Check each lip for wear, deformation, cut, and/or hardening. If necessary, replace.

Forward Clutch Drum Lip

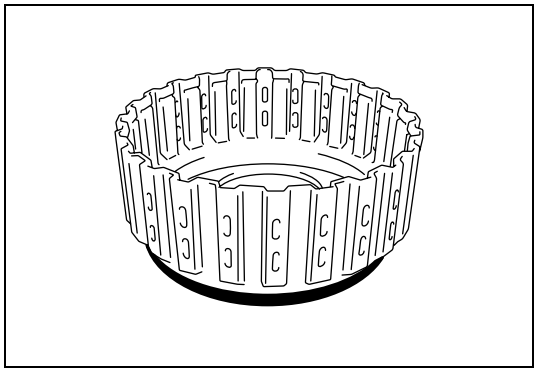

Check each lip for wear, deformation, cut, and/or hardening. If necessary, replace.

Assembly

Reverse disassembly procedure for assembly, noting the following points.

- Before assembling, apply automatic transaxle fluid to component parts.
- Replace O-rings and seal ring with new ones.

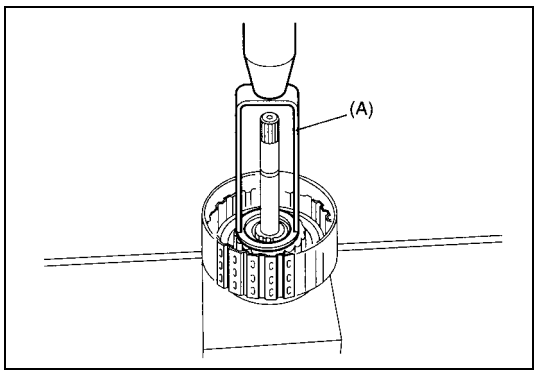

- Do not damage forward clutch return spring subassembly and balancer by pressing in forward clutch return spring subassembly passing through its original installing position over 1.5 mm (0.059 in.).

Special tool
(A): 09926-97610

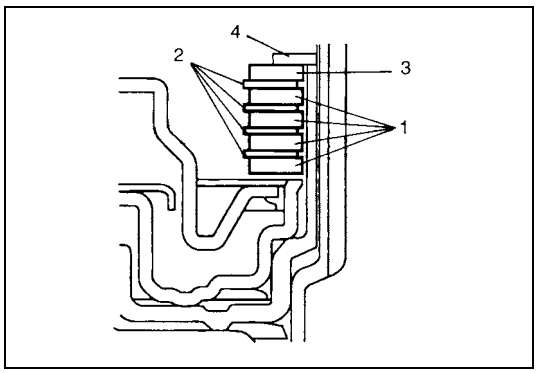

- Apply A/T fluid to forward clutch separator plates (1), discs (2) and retaining plate (3).
- Install forward clutch separator plates (1), discs (2) and retaining plate (3), then snap ring (4) to forward clutch drum.

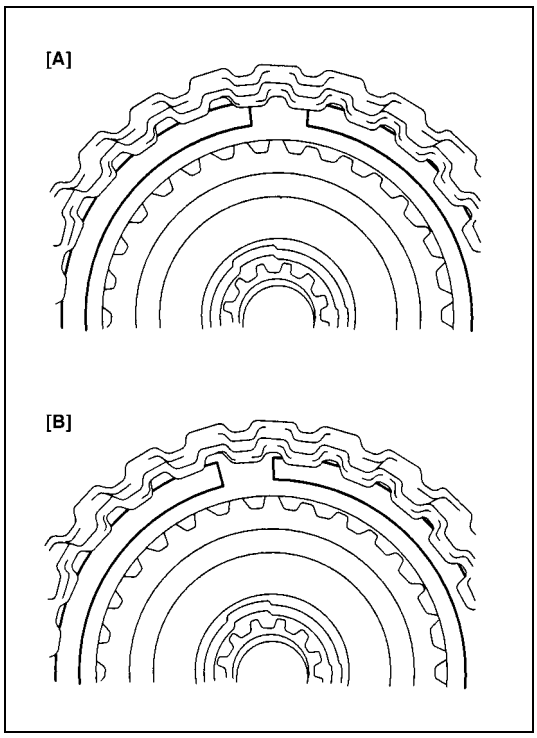

- Install forward clutch plate snap ring so that its both ends would be positioned in correct locations as shown in figure.

[A]	Correct
[B]	Incorrect

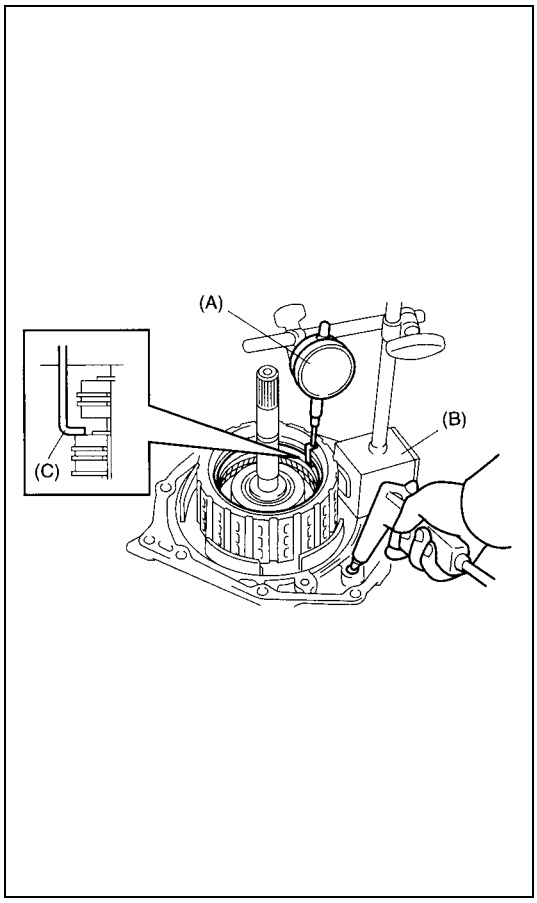

- Measure forward clutch piston stroke in the same manner as "Preliminary Check".

Special tool
(A): 09900-20607
(B): 09900-20701
(C): 09952-06020

Forward clutch piston stroke: 1.30 – 1.50 mm (0.051 – 0.059 in.)

When piston stroke is out of specification, select forward clutch retaining plate with proper thickness from among the list below and replace it.

Available forward clutch retaining plate thickness

Thickness	Identification mark
3.0 mm (0.118 in.)	1
3.1 mm (0.122 in.)	5
3.2 mm (0.126 in.)	2
3.3 mm (0.130 in.)	6
3.4 mm (0.134 in.)	3
3.5 mm (0.138 in.)	7
3.6 mm (0.142 in.)	4

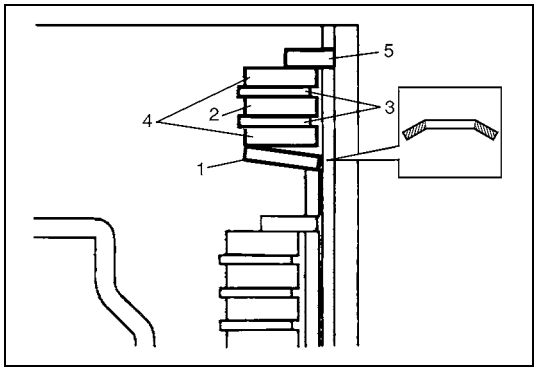

- Install reverse clutch cushion plate (1) in correct direction as shown in figure.
- Apply A/T fluid to reverse clutch cushion plate (1) reverse clutch separator plate (2) disces (3) and retaining plate (4).
- Install reverse clutch cushion plate (1) reverse clutch separator plate (2) disces (3) retaining plate (4) and then snap ring (5) to intermediate shaft subassembly.

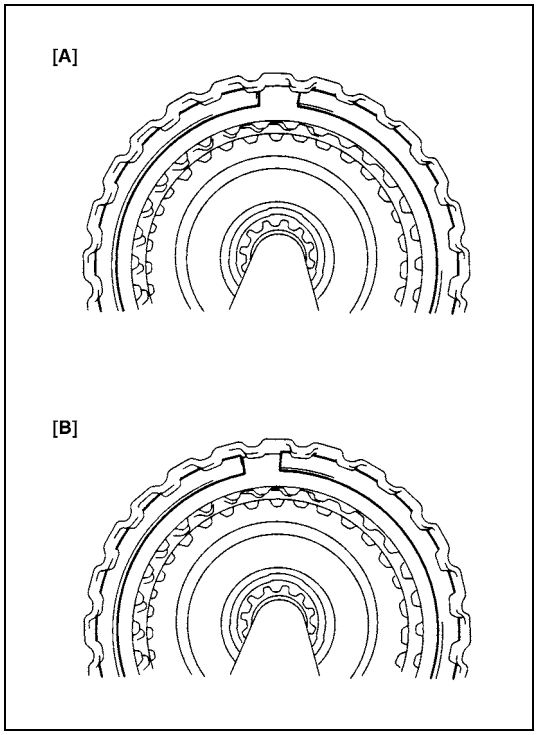

- Install reverse clutch plate snap ring so that its both ends would be positioned in correct locations as shown in figure.

[A]:	Correct
[B]:	Incorrect

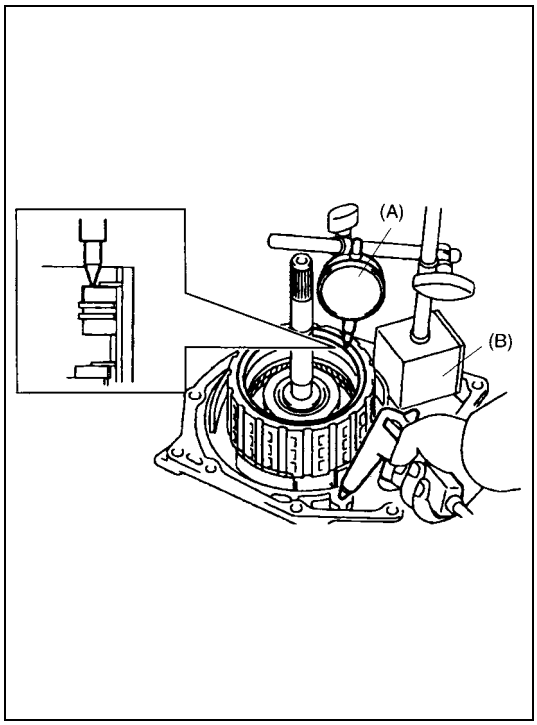

- Measure reverse clutch piston stroke in the same manner as “Preliminary Check”.

Special tool
(A): 09900-20607
(B): 09900-20701

Reverse clutch piston stroke: 1.20 – 1.60 mm (0.047 – 0.063 in.)

When piston stroke is out of specification, select reverse clutch retaining plate with proper thickness from among the list below and replace it.

Available reverse clutch retaining plate thickness

Thickness	Identification mark
3.0 mm (0.118 in.)	1
3.2 mm (0.126 in.)	2
3.4 mm (0.134 in.)	3
3.6 mm (0.142 in.)	4

2nd brake piston assembly

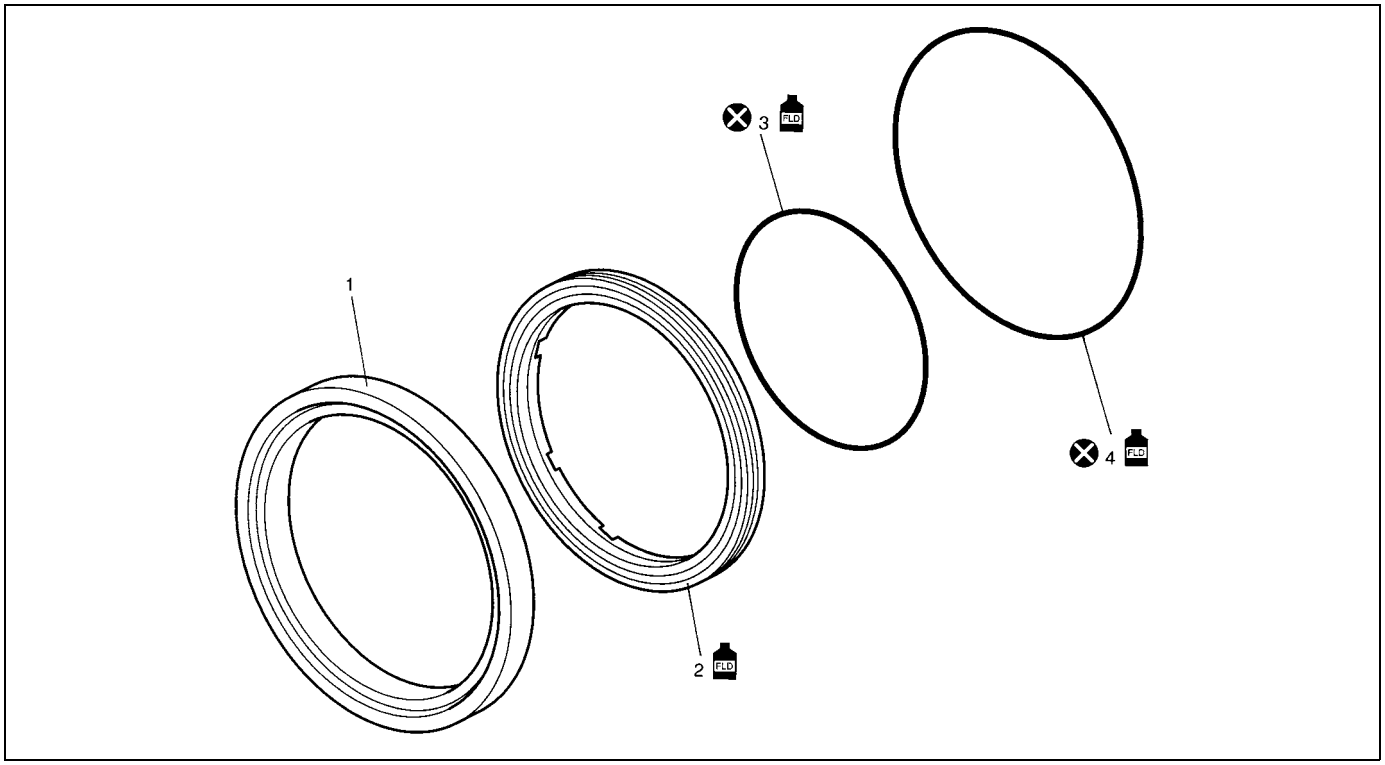

1. 2nd brake cylinder	4. Outer O-ring
2. 2nd brake piston	FLD Apply automatic transaxle fluid.
3. Inner O-ring	Do not reuse.

Disassembly

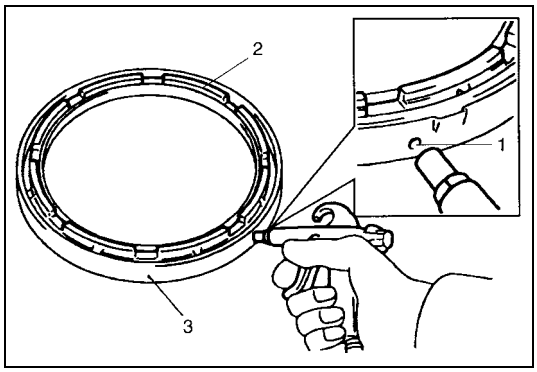

1) Apply compressed air (400 – 800 kPa, 4 – 8 kg/cm^2, 57 – 113 psi) to oil hole (1) of 2nd brake cylinder (3) to remove 2nd brake piston (2).

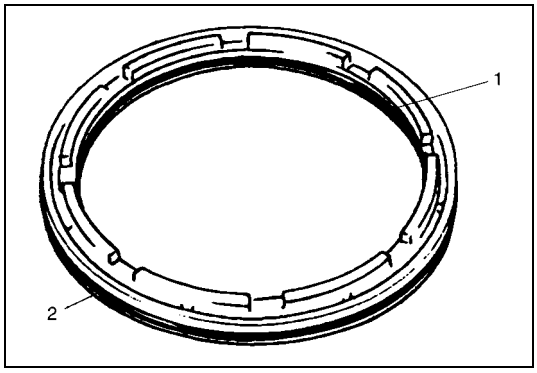

2) Remove inner O-ring (1) and outer O-ring (2).

Assembly

Reverse disassembly procedure for assembly, noting the following points.

- Use new O-rings. Apply A/T fluid to the O-rings, before installation.

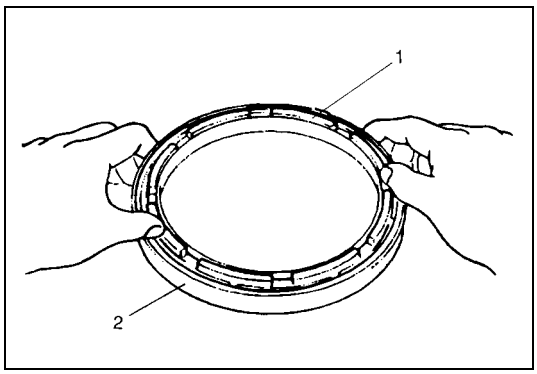

- Install 2nd brake piston (1) to which A/T fluid is applied to 2nd brake cylinder (2).
  Do not damage O-ring when installing 2nd brake piston.

Transaxle rear cover assembly (O/D and 2nd coast brake piston)

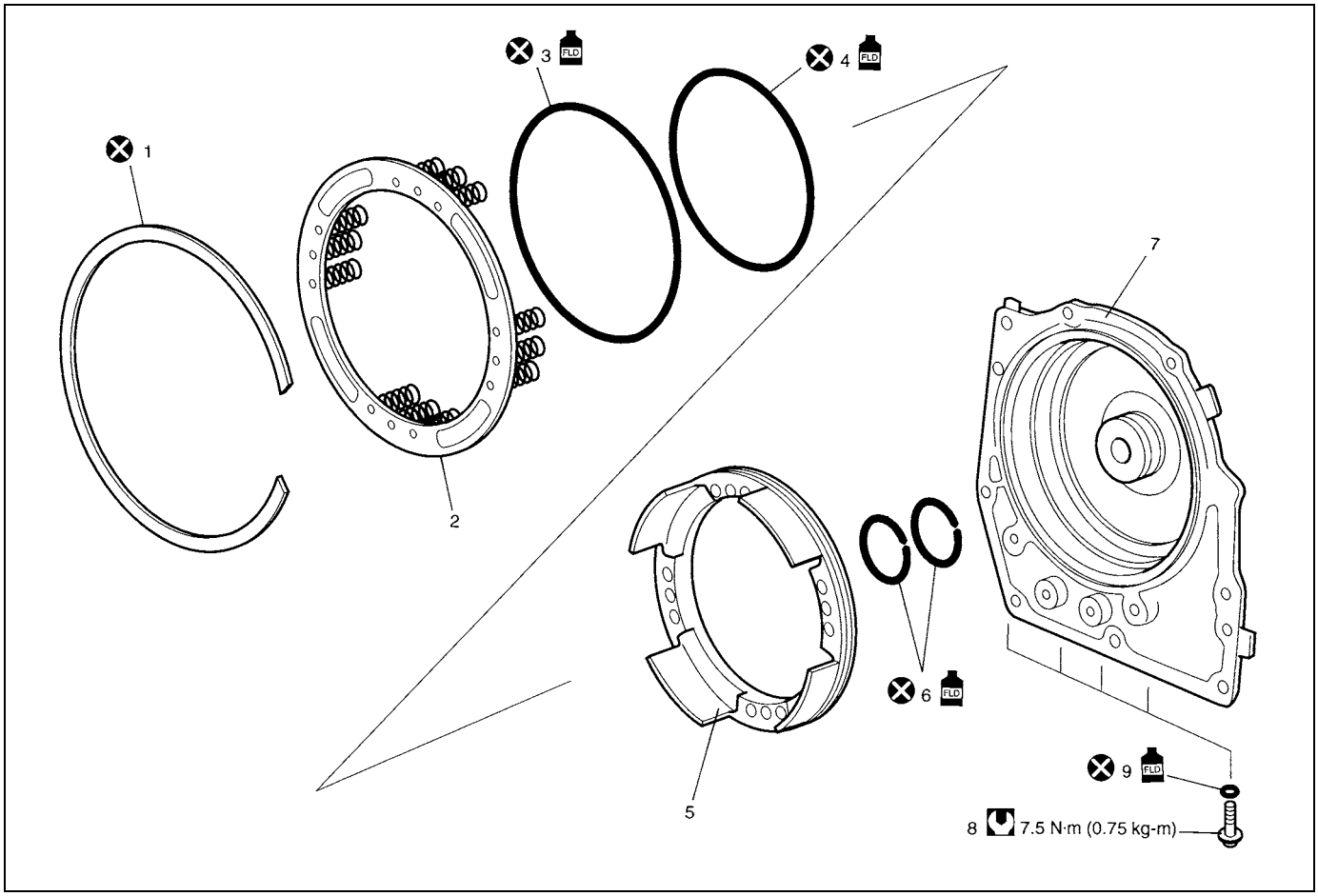

1. Snap ring	7. Transaxle rear cover
2. O/D and 2nd coast brake return spring subassembly	8. Rear cover plug
3. O/D and 2nd coast brake piston front O-ring	9. Rear cover plug O-ring
4. O/D and 2nd coast brake piston rear O-ring	FLD Apply automatic transaxle fluid.
5. O/D and 2nd coast brake piston	Do not reuse.
6. Rear cover seal ring	Tightening torque

Disassembly

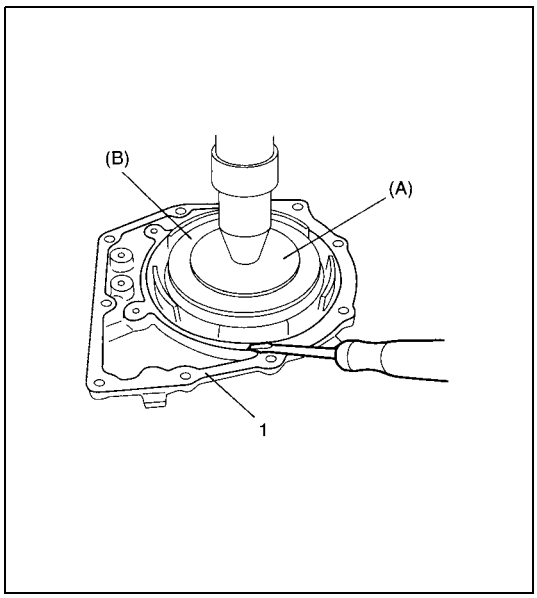

1) Remove snap ring by using special tools and hydraulic press.

CAUTION:
Do not press O/D and 2nd coast brake return spring subassembly in over 1.0 mm (0.039 in.).
Excessive compression may cause damage to O/D and 2nd coast brake return spring subassembly and/or piston.

Special tool
(A): 09926-96030
(B): 09946-06710

2) Remove O/D and 2nd coast brake return spring assembly.

1. Transaxle rear cover

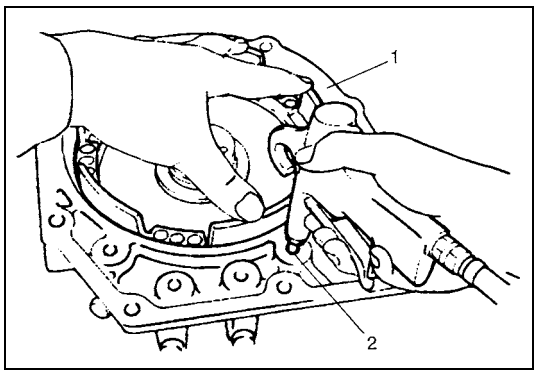

3) Apply compressed air (400 – 800 kPa, 4 – 8 kg/cm^2, 57 – 113 psi) to oil hole (2) of transaxle rear cover (1) to remove O/D and 2nd coast brake piston.

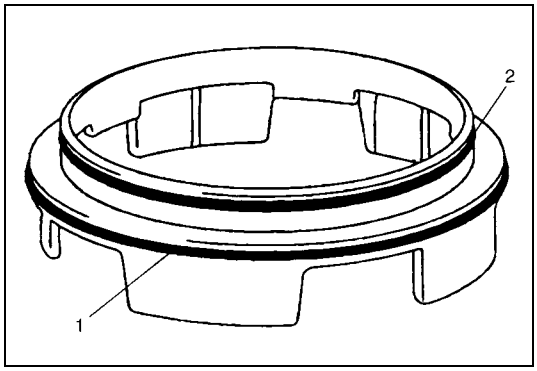

4) Remove O/D and 2nd coast brake piston front O-ring (1) and rear O-ring (2).

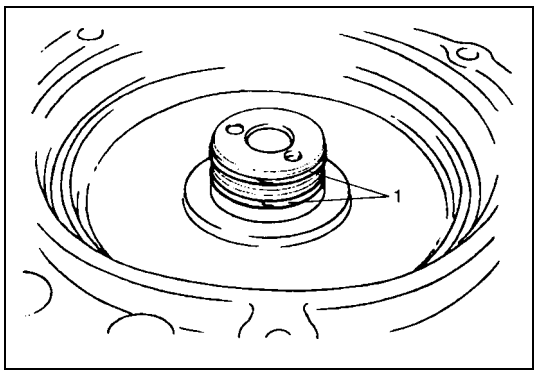

5) Remove rear cover seal rings (1).

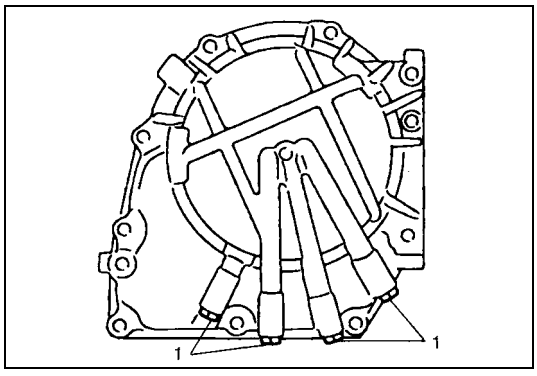

6) Remove rear cover plugs (1).

Inspection

O/D and 2nd Coast Blake Return Spring Subassembly

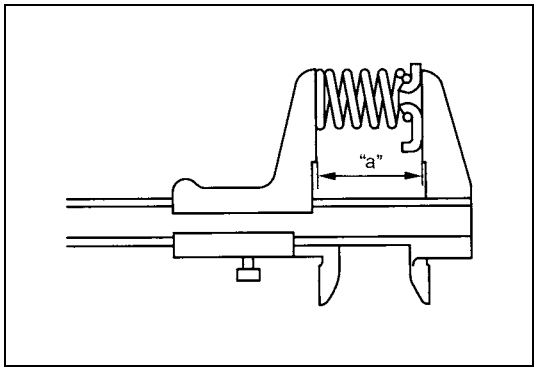

Measure free length of O/D and 2nd coast blake return spring.

Free length of O/D and 2nd coast blake return spring "a": 18.99 mm (0.748 in.)

NOTE:

- **Do not apply excessive force when measuring spring free length.**
- **Perform measurement at several points.**

Transaxle Rear Cover Bush

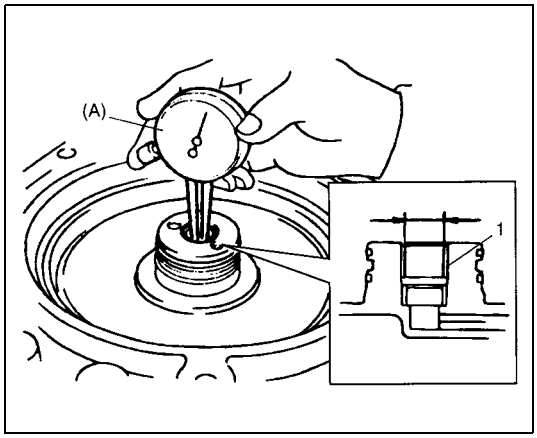

7) Measure transaxle rear cover bush bore by using special tool.

Special tool
(A): 09900-20605

Transaxle rear cover bush bore
Standard: 13.94 – 14.00 mm (0.549 – 0.551 in.)

If measured transaxle rear cover bush bore is out of specifications, replace transaxle rear cover with new one. In replacement, intermediate shaft subassembly also needs to be checked. Replace intermediate shaft subassembly, if necessary.

Assembly

Reverse disassembly procedure for assembly, noting the following points.

- Use new seal rings and O-rings. Apply A/T fluid to seal rings and O-rings before installation.
- Tighten rear cover plugs to specified torque.

Tightening torque
Rear cover plugs: 7.5 N·m (0.75 kg-m, 5.5 lb-ft)

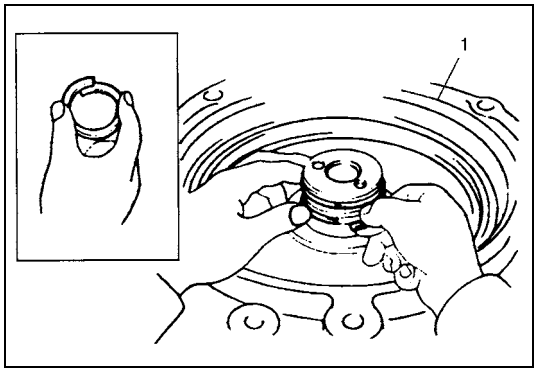

- Before installing rear cover seal ring, apply A/T fluid to ring. First, tighten seal ring to 5 mm (0.197 in.), then install seal ring.
- Do not open rear cover seal ring too wide to attach.

1. Transaxle rear cover

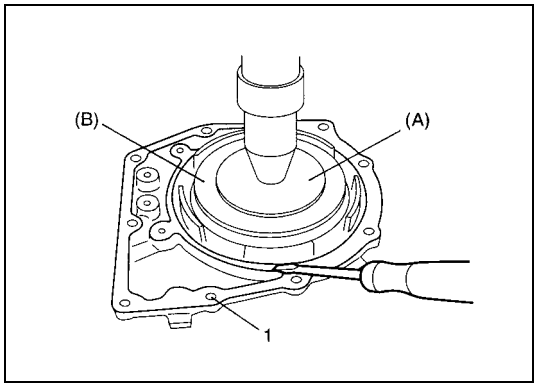

- Do not damage O/D and 2nd coast brake return spring subassembly and piston by pressing in O/D and 2nd coast brake return spring subassembly passing through its original installing position over 1.0 mm (0.039 in.).

Special tool
(A): 09926-96030
(B): 09946-06710

1. Transaxle rear cover

Differential Assembly

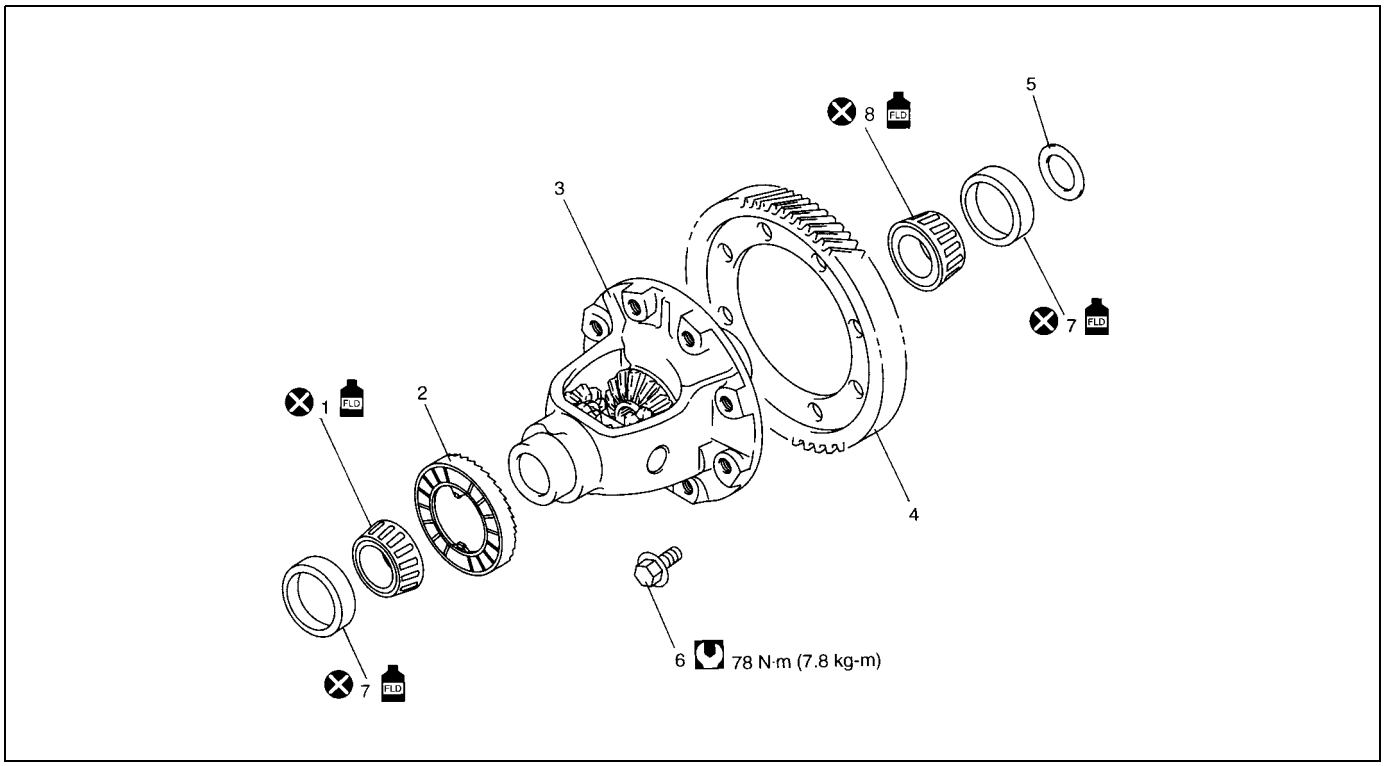

1. Differential side RH bearing	7. Side bearing cup
2. Output shaft speed sensor (VSS) drive gear	8. Differential side LH bearing
3. Differential case subassembly	Apply automatic transaxle fluid.
4. Final gear	Tightening torque
5. Side bearing shim	Do not reuse.
6. Final gear bolt	

Disassembly

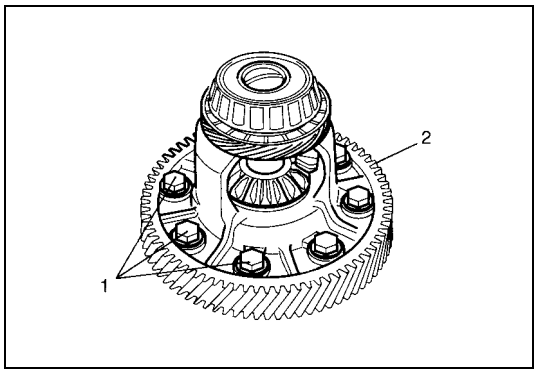

1) Remove final gear bolts (1), and then final gear (2).

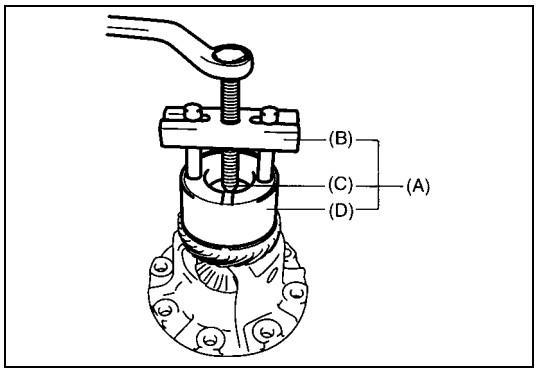

2) Remove differential side RH bearing by using special tools.

Special tool
(A): 09926-37610
(B): 09926-37610-001
(C): 09926-37610-003
(D): 09926-47610-002

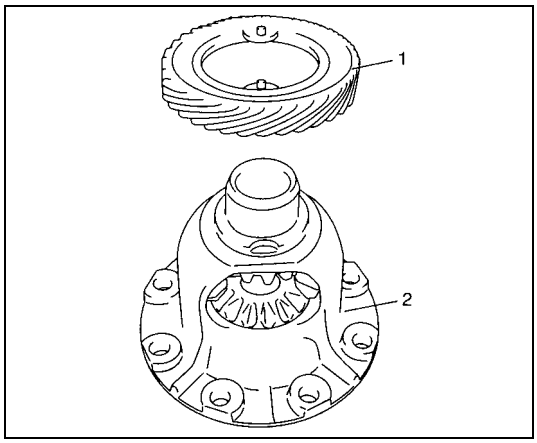

3) Remove output shaft speed sensor (VSS) drive gear (1).

2. Differential case subassembly

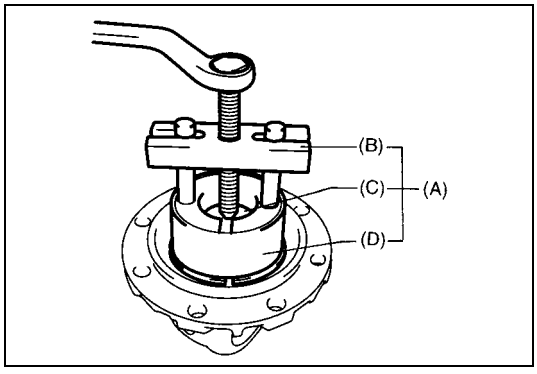

4) Remove differential side LH bearing by using special tools.

Special tool
(A): 09926-37610
(B): 09926-37610-001
(C): 09926-37610-003
(D): 09926-37610-002

Inspection

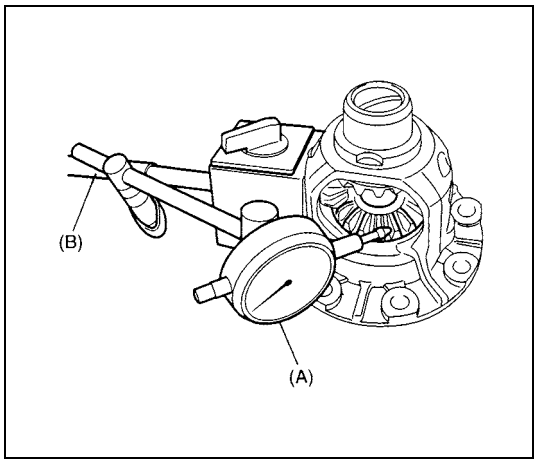

1) Hold differential case subassembly with soft jawed vice and set special tools as shown.

Special tool
(A): 09900-20607
(B): 09900-20701

2) Measure differential gear thrust play.

Differential gear thrust play:
0.05 – 0.20 mm (0.002 – 0.008 in.)

3) If thrust play is out of specification, replace differential case subassembly.

Assembly

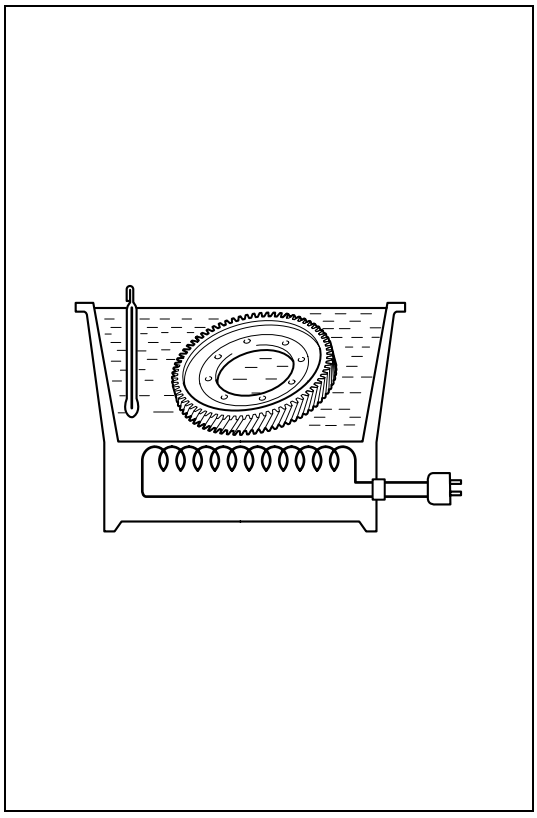

WARNING:

- **When taking warmed final driven gear out of vessel, use tongs or the like. Taking out it with bare hand will cause severe burn.**
- **While installing warmed final driven gear, use oven glove such as leather glove. Picking up it with bare hand may cause burn.**

CAUTION:

Do not leave final driven gear in boiling water for longer than 5 min. Overheating the gear may cause strength reduction of gear.

1) Put final driven gear in water vessel, heat and remove when it boils, then remove moisture.

NOTE:

After removing moisture on final driven gear, install final driven gear to differential case as quickly as possible.

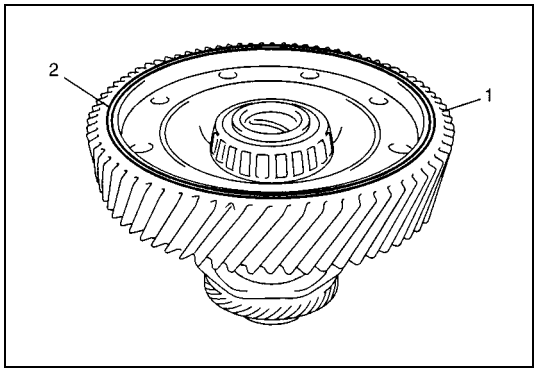

2) As shown in figure, facing groove (2) side upward, install final driven gear (1) to differential case.

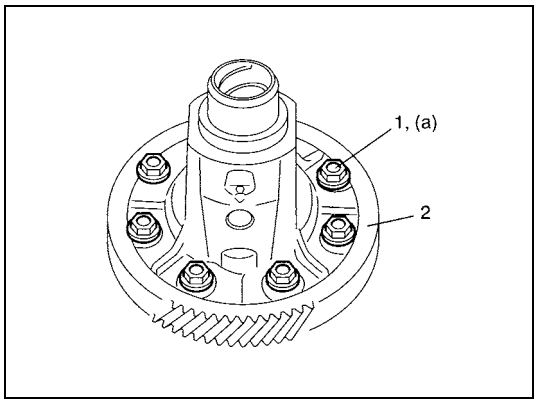

3) Tighten final gear bolts (1) to specified torque.

Tightening torque
Final gear bolts
(a): 78 N·m (7.8 kg-m, 56.5 lb-ft)

2. Final driven gear

NOTE:

- **To avoid rust, apply A/T fluid to final driven gear after installation.**

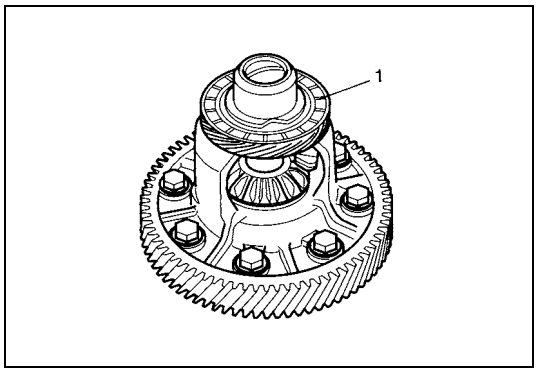

4) After applying A/T fluid to output shaft speed sensor (VSS) drive gear (1), install output shaft speed sensor drive gear.

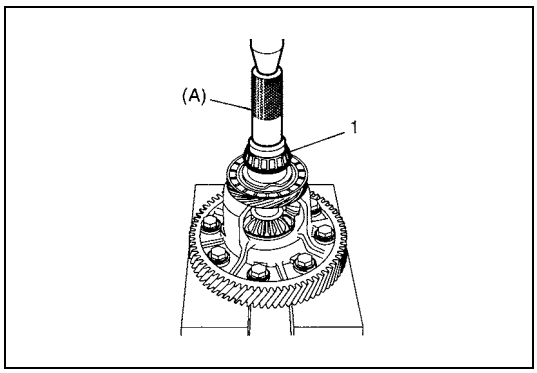

5) Install new differential side RH bearing (1) by using special tool and hydraulic press.

Special tool
(A): 09913-70123

NOTE:

Replace differential side RH bearing together with bearing cup as a set.

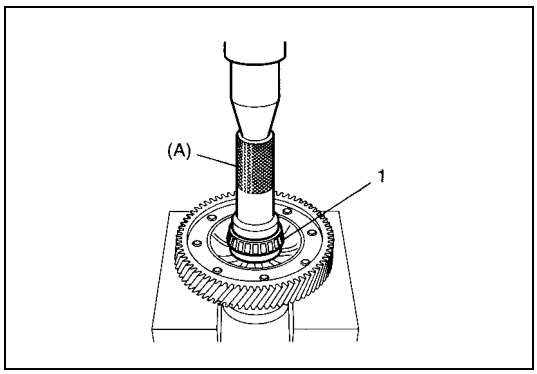

6) Install new differential side LH bearing (1) by using special tool and hydraulic press.

Special tool
(A): 09913-70123

NOTE:

Replace differential side LH bearing together with bearing cup as a set.

Countershaft assembly

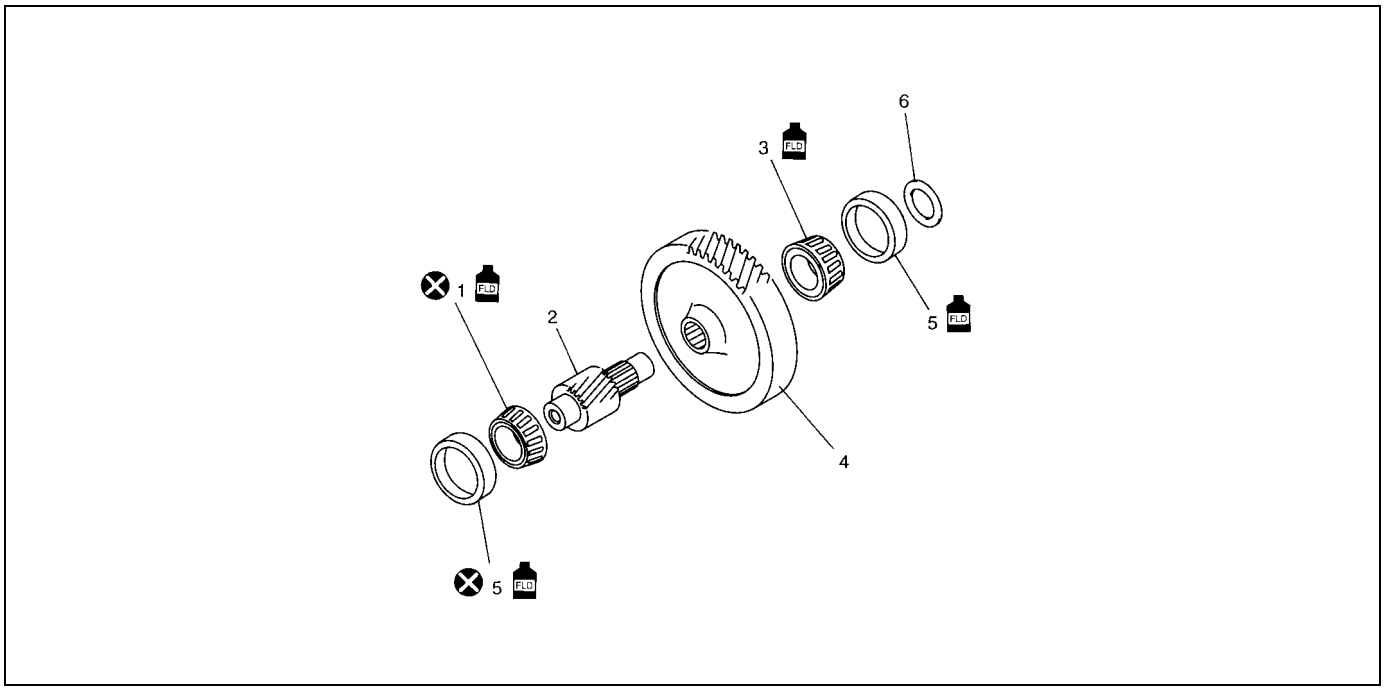

1. Countershaft RH bearing	5. Bearing cap
2. Countershaft	6. Countershaft bearing shim
3. Countershaft LH bearing	Apply automatic transaxle fluid.
4. Reduction driven gear	Do not reuse.

Disassembly

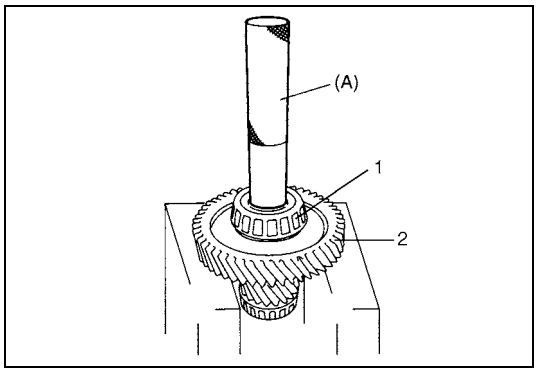

1) Remove countershaft LH bearing (1) and reduction driven gear (2) at once by using special tool and hydraulic press.

Special tool
(A): 09925-98221

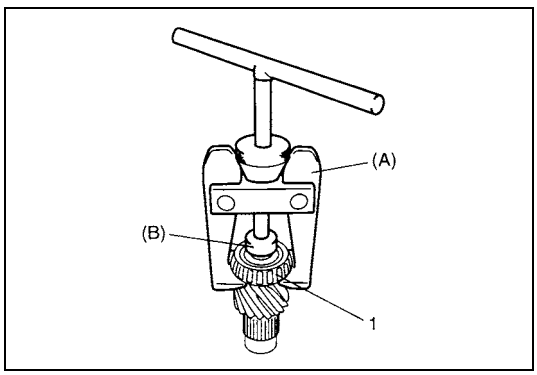

2) Remove countershaft RH bearing (1) by using special tools.

Special tool
(A): 09913-61510
(B): 09926-58010

Assembly

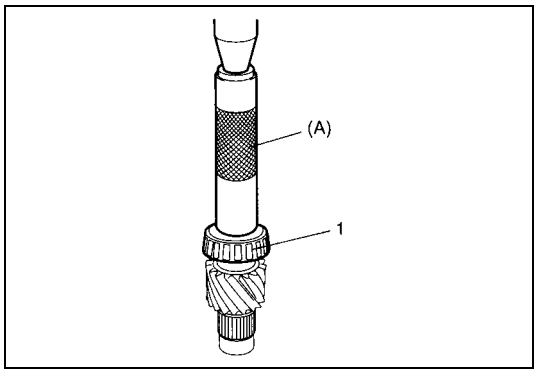

1) Install new countershaft RH bearing (1) by using special tool and hydraulic press.

Special tool
(A): 09913-84510

NOTE:

Replace countershaft RH bearing together with bearing cup as a set.

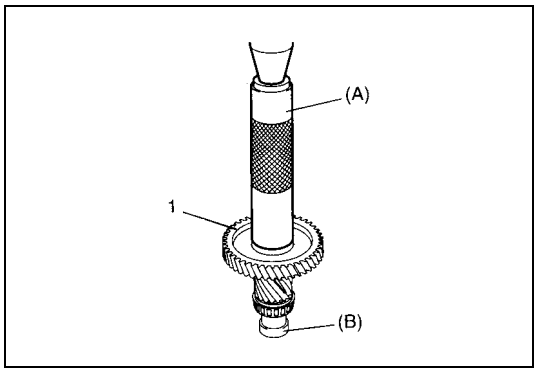

2) Install reduction driven gear (1) with special tools and hydraulic press.

Special tool
(A): 09913-84510
(B): 09925-88210

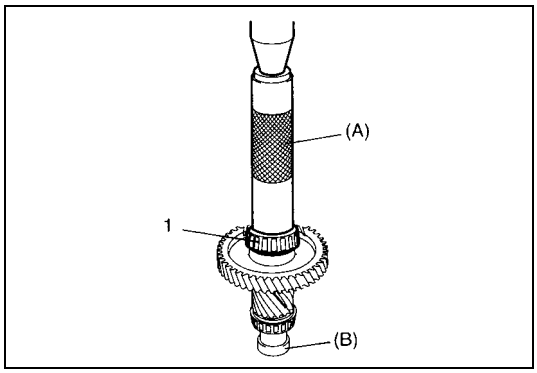

3) Install countershaft LH bearing (1) with special tools and hydraulic press.

Special tool
(A): 09913-84510
(B): 09925-88210

Valve body assembly

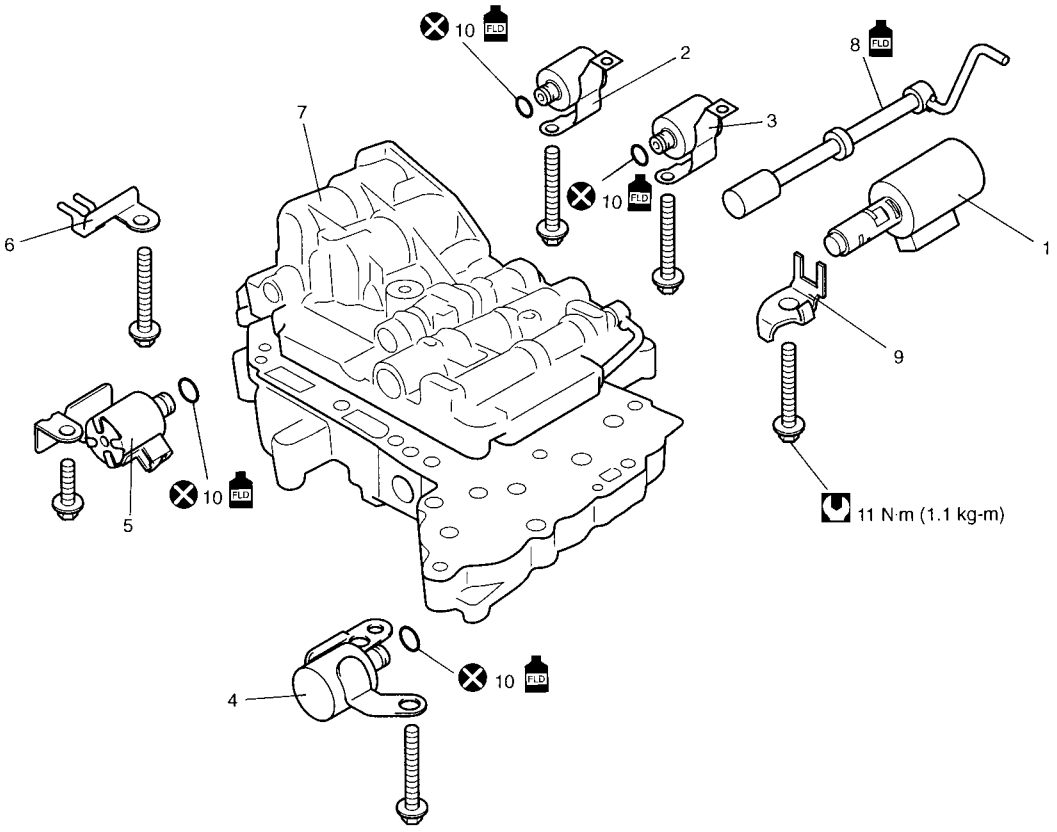

1. Pressure control solenoid valve	8. Manual valve
2. Shift solenoid valve-A (No.1)	9. Solenoid lock plate
3. Shift solenoid valve-B (No.2)	10. O-ring
4. TCC (Lock-up) solenoid valve	FLD Apply automatic transaxle fluid.
5. Timing solenoid valve	Tightening torque
6. Temperature sensor clamp	Do not reuse.
7. Valve body assembly	

CAUTION:

When replacing pressure control solenoid valve, it is strictly required to replace it together with vale body assembly as a set. Replacing pressure control solenoid independently may cause excessive shift shock.

Disassembly

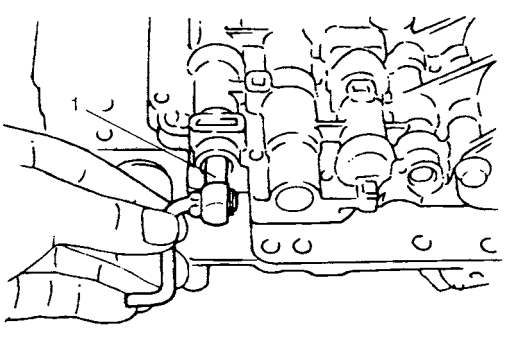

1) Pull out manual valve (1).

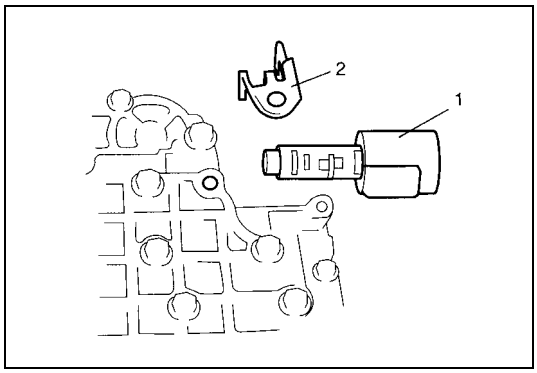

2) Remove pressure control solenoid valve (1).

2. Solenoid lock plate

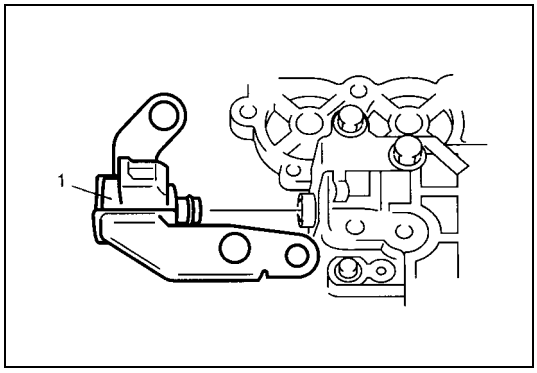

3) Remove TCC (Lock-up) solenoid valve (1).

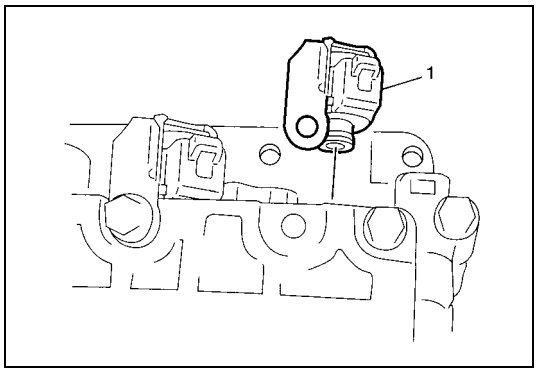

4) Remove shift solenoid valve-A (1).

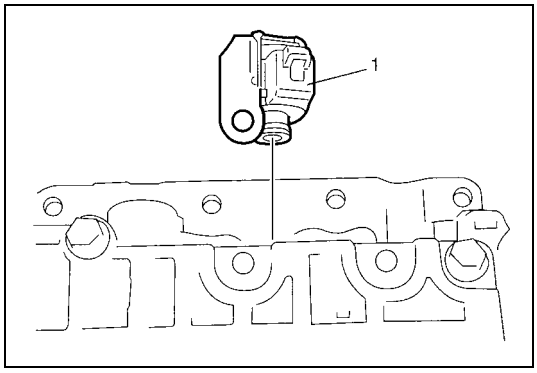

5) Remove shift solenoid valve-B (1).

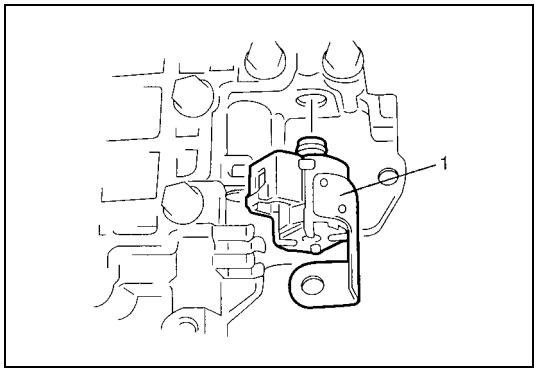

6) Remove timing solenoid valve (1).

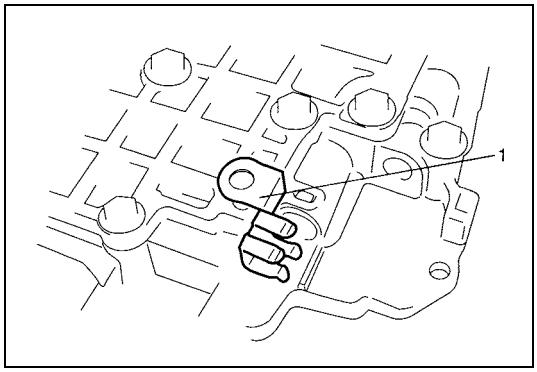

7) Remove temperature sensor clamp (1).

Assembly

Reverse disassembly procedure for assembly, noting following points.

- Shift solenoid valve-A and -B are identical
- After applying A/T fluid to new O-rings, fit them to solenoid valves, then install solenoid valves to valve body.

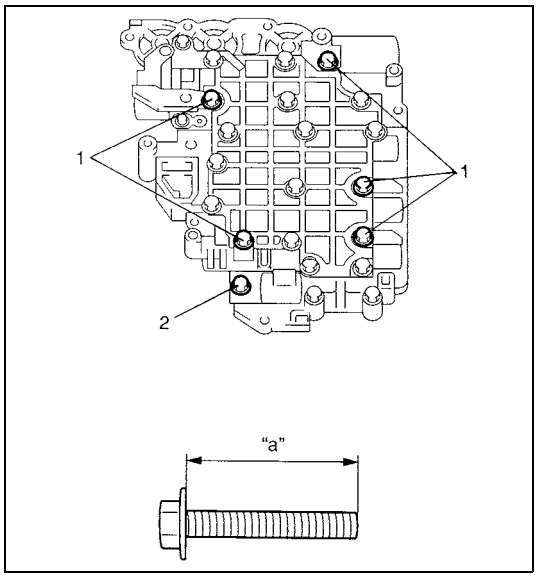

- Tighten solenoid valve bolts to specified torque

Tightening torque
Solenoid valve bolts
(a): 11 N·m (1.1 kg-m, 8.0 lb-ft)

Bolt	Length "a"	Pieces
A (1)	49 mm (1.93 in.)	5
B (2)	20 mm (0.79 in.)	1

Torque converter housing

Disassembly

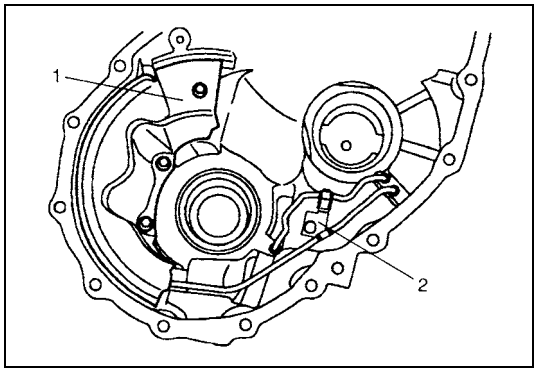

1) Remove fluid reservoir RH plate (1) and lubrication tube clamp (2).

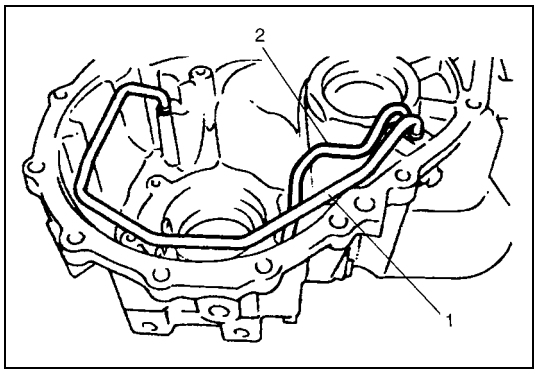

2) Remove lubrication LH tube (1) and RH tube (2).

NOTE:
Do not bend lubrication tube with excessive force.

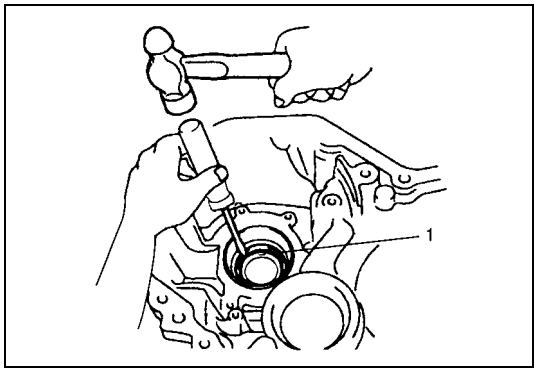

3) Remove differential side oil seal (1).

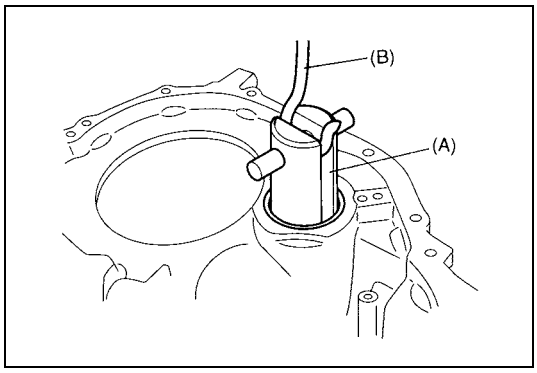

4) Remove countershaft RH bearing cup by using special tools.

Special tool
(A): 09944-96011
(B): 09942-15511

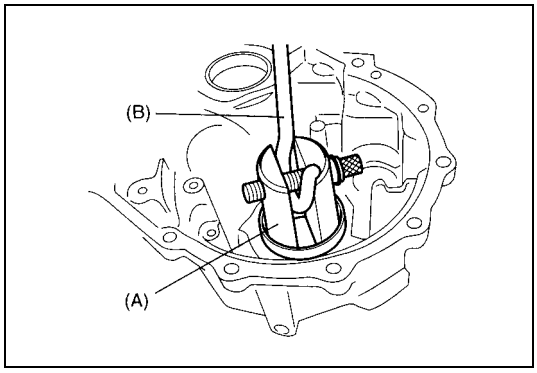

5) Remove differential side RH bearing cup by using special tools.

Special tool
(A): 09944-96011
(B): 09942-15511

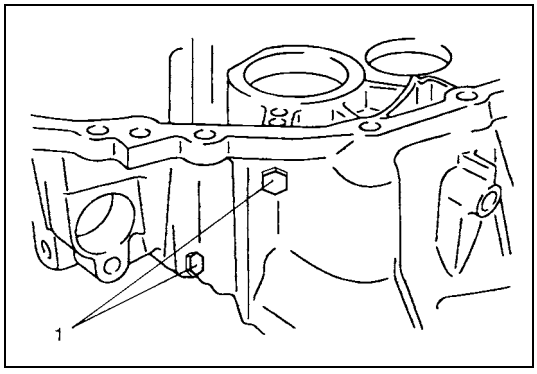

6) Remove torque converter case plugs (1).

Assembly

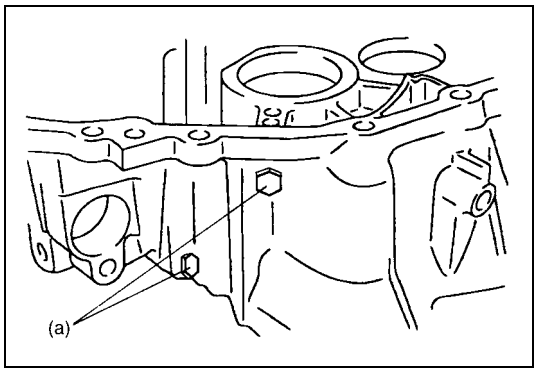

1) After applying A/T fluid to new O-rings, fit them to housing plugs. Finally install plugs to torque converter housing.

Tightening torque
Torque converter housing plugs
(a): 7.5 N·m (0.75 kg-m, 5.5 lb-ft)

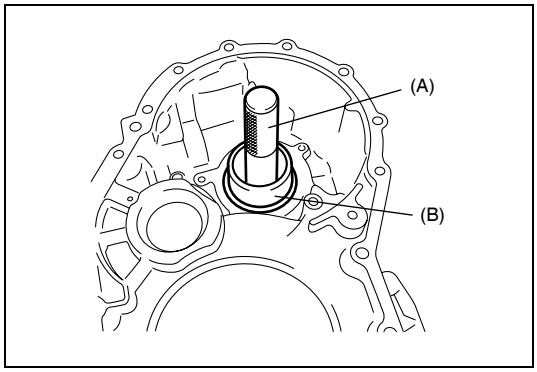

2) Using special tools, assemble differential side RH bearing cup.

Special tool
(A): 09924-74510
(B): 09944-88220

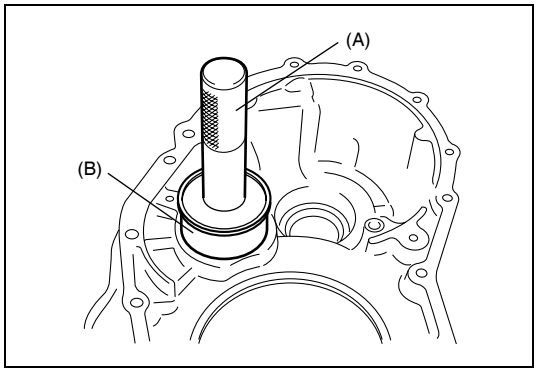

3) Using special tool, install countershaft RH bearing cup.

Special tool
(A): 09924-74510
(B): 09944-88220

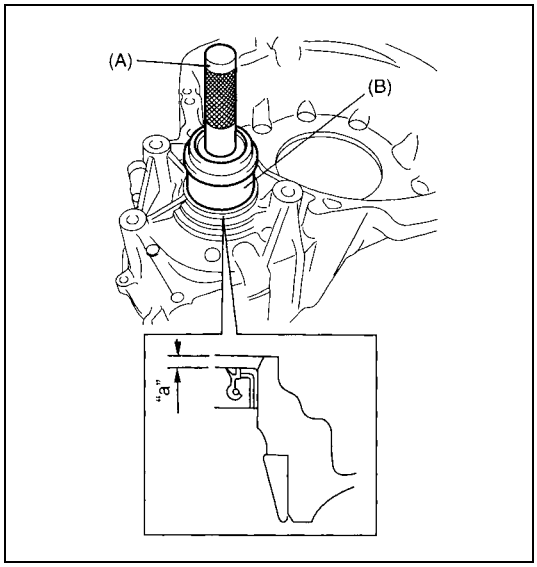

a)Using special tools, install new differential side oil seal to torque converter housing.

Special tool
(A): 09924-74510
(B): 09944-88220

Differential side oil seal installing depth
"a": 2.6 – 3.6 mm (0.10 – 0.14 in.)

4) Apply grease to oil seal lip.

Grease 99000-25030

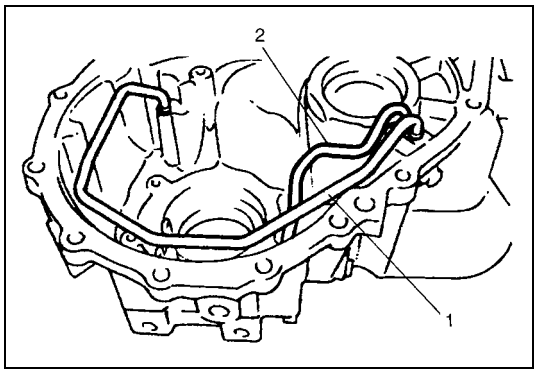

5) Install lubrication LH tube (1) and RH tube (2).

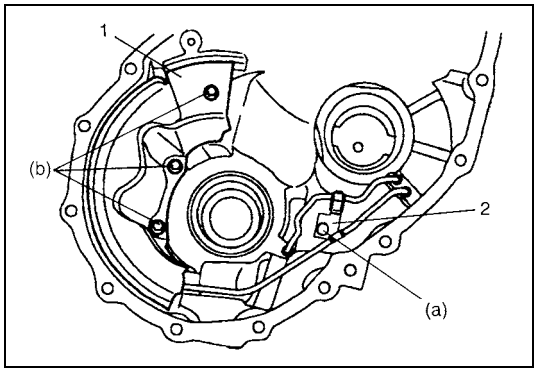

6) Install fluid reservoir RH plate (1) and lubrication tube clamp (2).

Tightening torque
Lubrication tube clamp bolt
(a): 5.5 N·m (0.55 kg-m, 4.0 lb-ft)
Fluid reservoir RH plate bolts
(b): 5.5 N·m (0.55 kg-m, 4.0 lb-ft)

Transaxle case

Disassembly

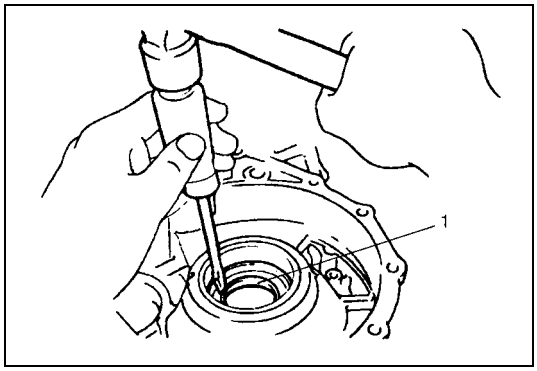

1) Remove differential side oil seal (1).

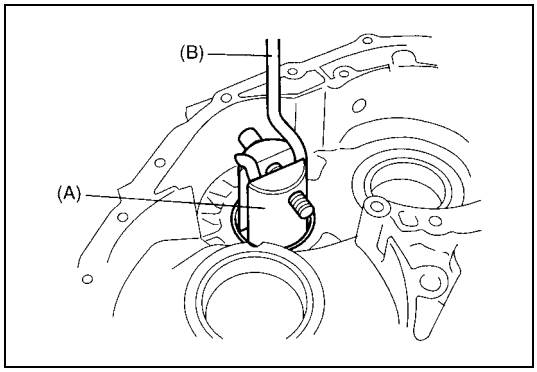

2) Remove countershaft LH bearing cup and shim with special tools.

Special tool
(A): 09944-96011
(B): 09942-15511

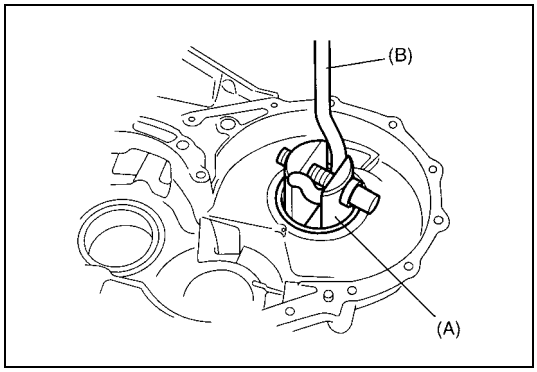

3) Remove differential side LH bearing cup and shim with special tools.

Special tool
(A): 09944-96011
(B): 09942-15511

Assembly

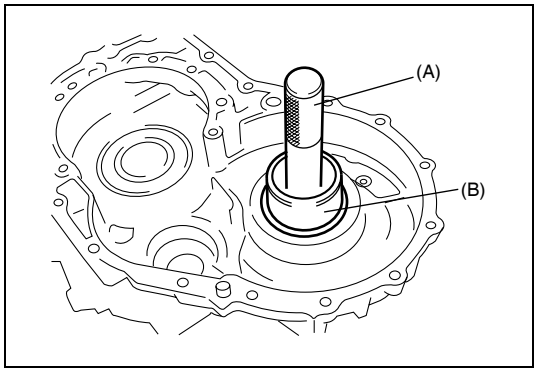

1) Using special tools, assemble shim and differential side LH bearing cup.

Special tool
(A): 09924-74510
(B): 09944-88220

NOTE:
Use shim with same thickness as the removed one.

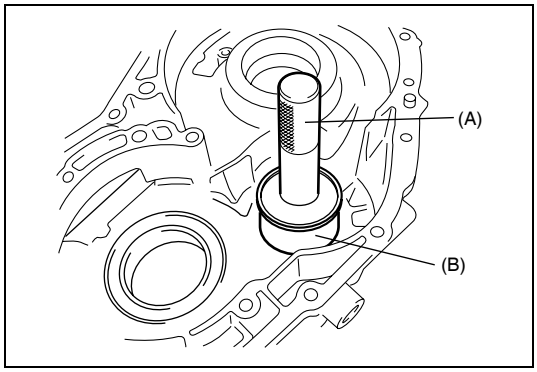

2) Using special tools, assemble shim and countershaft LH bearing cup.

Special tool
(A): 09924-74510
(B): 09944-88220

NOTE:
Use shim with same thickness as the removed one.

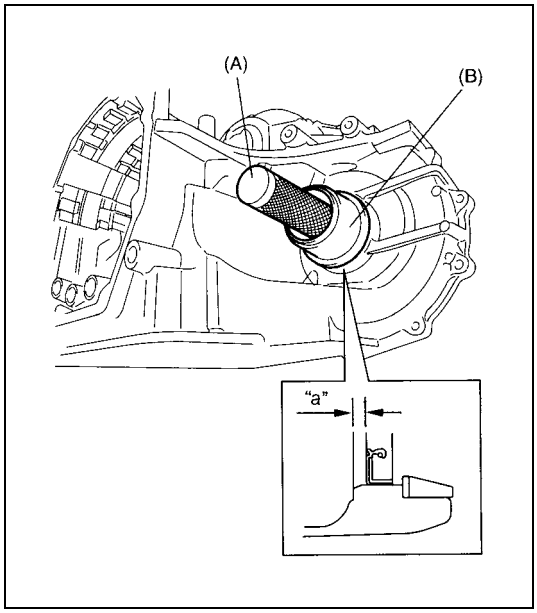

3) Install new differential side oil seal to transaxle case by using special tools.

Special tool
(A): 09924-74510
(B): 09944-88220

Differential side oil seal installing depth
"a": 3.8 – 4.8 mm (0.15 – 0.19 in.)

4) Apply grease to oil seal lip.

Grease 99000-25030

Adjustment before unit assembly

Differential Side Bearing Preload

1) After applying A/T fluid to differential assembly, fit it to transaxle case.

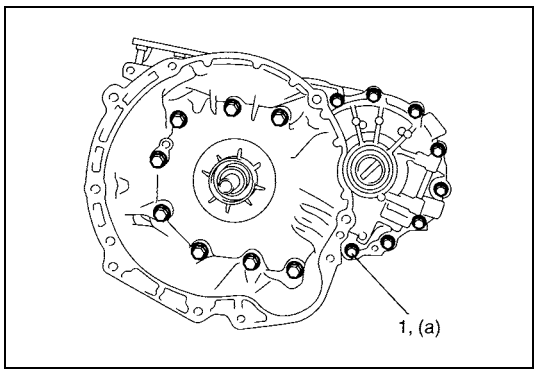

2) Install torque converter housing to transaxle case, then tighten bolts (1) to specified torque.

Tightening torque
Torque converter housing bolts
(a): 33 N·m (3.3 kg-m, 24.0 lb-ft)

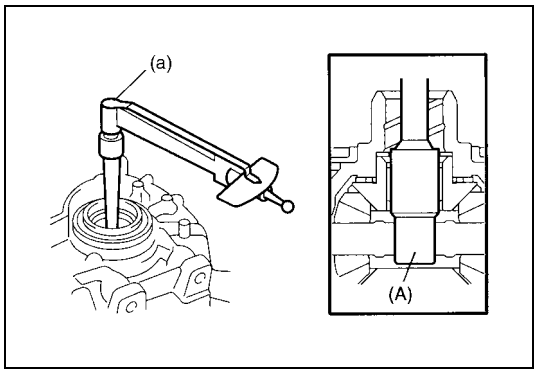

3) Measure bearing preload (a) by using a special tool.

Special tool
(A): 09928-06050

Differential side bearing preload (starting torque)
In the case of new bearing
(a): 0.8 – 1.4 N·m (8.0 – 14.0 kg-cm, 0.58 – 1.01 lb-ft)

In the case of reused bearing
(a): 0.4 – 0.7 N·m (4.0 – 7.0 kg-cm, 0.29 – 0.51 lb-ft)

4) If bearing preload is out of specification, select shim with suitable thickness from among the list below and replace it. Then adjust differential side bearing preload within specification.

Available shim thickness

Thickness	Identification mark
1.80 mm (0.070 in.)	A
1.85 mm (0.072 in.)	B
1.90 mm (0.074 in.)	C
1.95 mm (0.076 in.)	D
2.00 mm (0.078 in.)	E
2.05 mm (0.080 in.)	F
2.08 mm (0.081 in.)	G
2.11 mm (0.083 in.)	H
2.14 mm (0.084 in.)	J
2.17 mm (0.085 in.)	K
2.20 mm (0.087 in.)	L
2.23 mm (0.088 in.)	M
2.26 mm (0.089 in.)	N
2.29 mm (0.090 in.)	P
2.32 mm (0.091 in.)	Q
2.35 mm (0.092 in.)	R
2.40 mm (0.094 in.)	S
2.45 mm (0.096 in.)	T
2.50 mm (0.098 in.)	U
2.55 mm (0.100 in.)	V
2.60 mm (0.102 in.)	W
2.65 mm (0.104 in.)	X
2.70 mm (0.106 in.)	Y

NOTE:

Record measured differential side bearing preload, because it is necessary to adjust counter shaft bearing preload.

5) Remove differential assembly.

Counter Shaft Bearing Preload

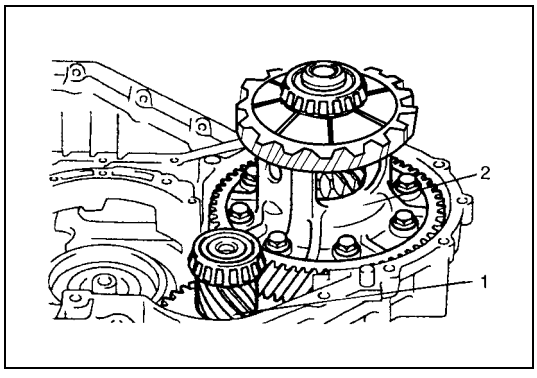

1) After applying A/T fluid to countershaft assembly (1) and differential assembly (2), fit them.
2) Install torque converter housing to transaxle case, then tighten bolts to specified torque.

Tightening torque

Torque converter housing bolts: 33 N·m (3.3 kg-m, 24 lb-ft)

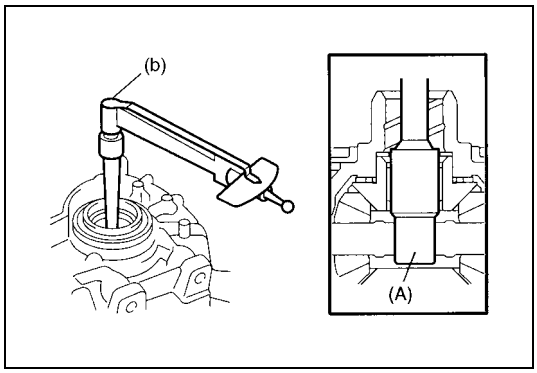

3) Measure bearing preload (b) by using special tool.

Special tool
(A): 09928-06050

Counter shaft bearing preload = (b) – Differential side bearing preload (a)

Counter shaft bearing preload (Starting torque)
In the case of new bearing
0.33 – 0.76 N·m (3.3 – 7.6 kg-cm, 0.24 – 0.55 lb-ft)

In the case of reused bearing
0.17 – 0.38 N·m (1.7 – 3.8 kg-cm, 0.12 – 0.28 lb-ft)

4) If bearing preload is out of specification, select shim with suitable thickness from among the list below and replace it. Then adjust countershaft bearing preload within specification.

Available shim thickness

Thickness	Identification mark
1.70 (0.066 in.)	1
1.75 (0.068 in.)	2
1.80 (0.070 in.)	3
1.85 (0.072 in.)	4
1.90 (0.074 in.)	5
1.93 (0.075 in.)	6
1.96 (0.077 in.)	7
1.99 (0.078 in.)	A
2.02 (0.079 in.)	B
2.05 (0.080 in.)	C
2.08 (0.081 in.)	D
2.11 (0.083 in.)	E
2.14 (0.084 in.)	F
2.17 (0.085 in.)	G
2.20 (0.086 in.)	H
2.25 (0.088 in.)	K
2.30 (0.090 in.)	L
2.35 (0.092 in.)	M
2.40 (0.094 in.)	N
2.45 (0.096 in.)	P
2.50 (0.098 in.)	Q
2.55 (0.100 in.)	R
2.60 (0.102 in.)	S
2.65 (0.104 in.)	U
2.70 (0.106 in.)	W

5) Remove differential assembly and counter shaft assembly.

Unit Assembly

CAUTION:
- **Automatic transaxle consists of highly precise parts. As even flaw in small part may cause oil leakage or decrease in function, check each part carefully before installation.**
- **Clean all parts with compressed air. Never use wiping cloths or rags.**
- **Before assembling new clutch or brake discs, soak them in automatic transaxle fluid for at least 2 hours.**
- **Be sure to use new gaskets and O-rings.**
- **Lubricate O-rings with automatic transaxle fluid.**
- **Apply automatic transaxle fluid on sliding or rotating surfaces of the parts before assembly.**
- **Use Suzuki Super Grease "C" to retain parts in place.**
- **Be sure to install thrust bearings and races in correct direction and position.**
- **Make sure that snap ring ends are not aligned with one of cutouts and are installed in groove correctly.**
- **Do not use adhesive cements on gaskets and similar parts.**
- **Be sure to torque each bolt and nut to specification.**

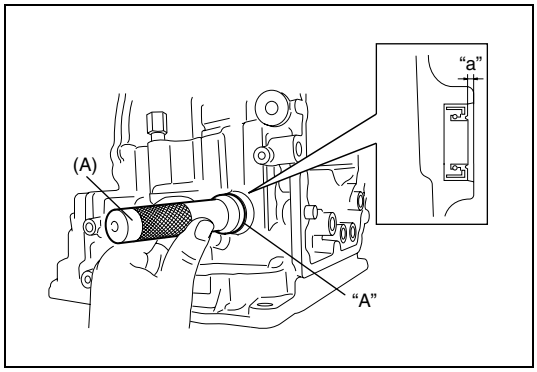

1) Install new manual shift shaft oil seal to transaxle case. Use special tool and hammer to install it, and then apply grease to its lip.

Special tool
(A): 09925-98210

"A": Grease 99000-25030

Manual shift shaft oil seal installing depth
"a": 0.75 – 1.25 mm (0.03 – 0.05 in.)

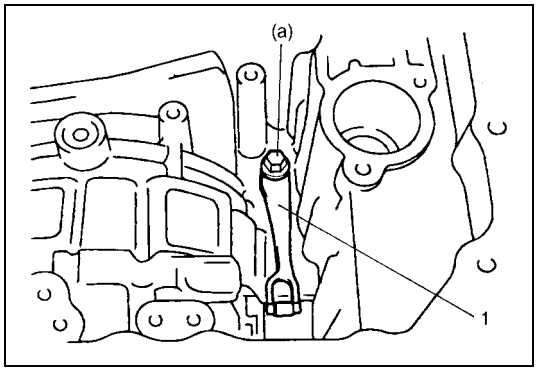

2) Install manual detent spring (1) to transaxle case and tighten manual detent spring bolt to specified torque.

Tightening torque
Manual detent spring bolt
(a): 10 N·m (1.0 kg-m, 7.5 lb-ft)

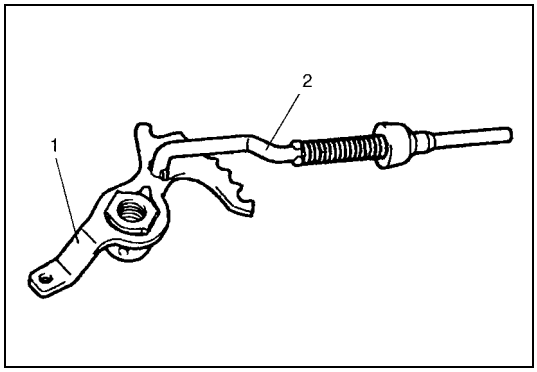

3) Install parking lock pawl rod (2) to manual valve lever (1).

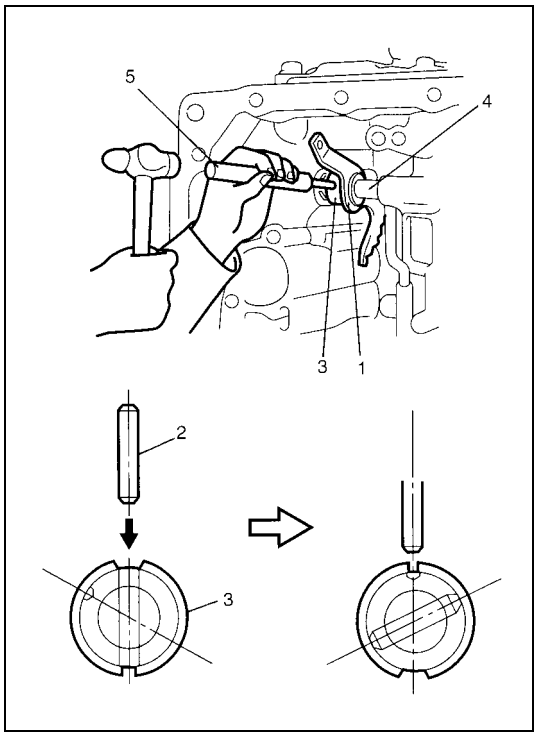

4) After applying A/T fluid to new manual valve lever (1), install new manual shift shaft (4), new spacer (3) and manual valve lever to transaxle case.
5) After installing manual valve lever pin (2) by using spring pin remover with 3 mm (0.12 in.) in diameter (5) and hammer, turn spacer to set the position as shown in the figure. Then calk spacer with a punch.

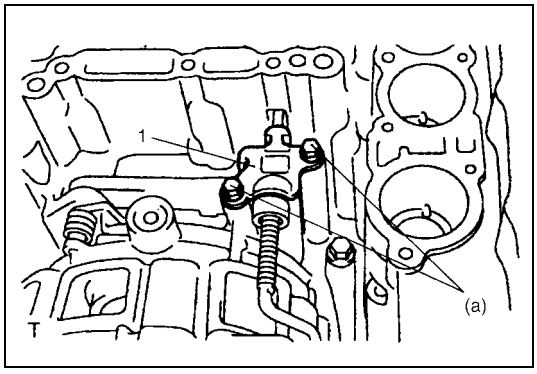

6) Install parking lock pawl bracket (1) to transaxle case.

Tightening torque
Parking lock pawl bracket bolts
(a): 7.5 N·m (0.75 kg-m, 5.5 lb-ft)

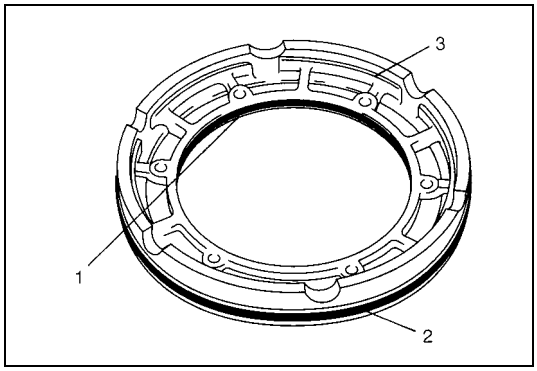

7) After applying A/T fluid to new O-rings, install them to 1st and reverse brake piston (3).

1.	Inner O-ring
2.	Outer O-ring

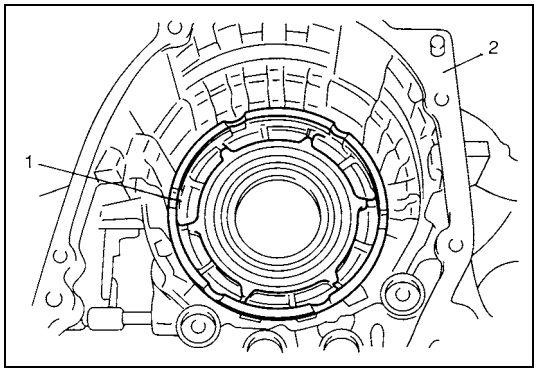

8) Install 1st and reverse brake piston (1) to transaxle case (2).

NOTE:

Be careful not to damage O-ring when installing 1st and reverse brake piston.

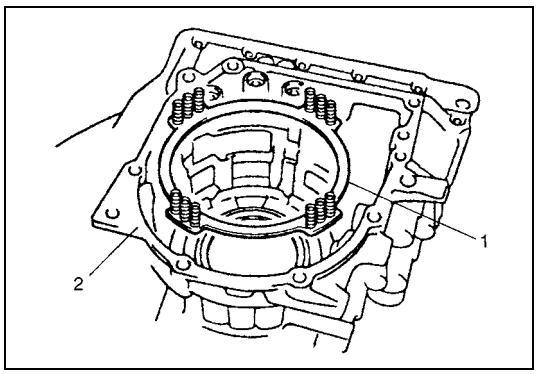

9) Install 1st and reverse brake return spring subassembly (1) to transaxle case (2).

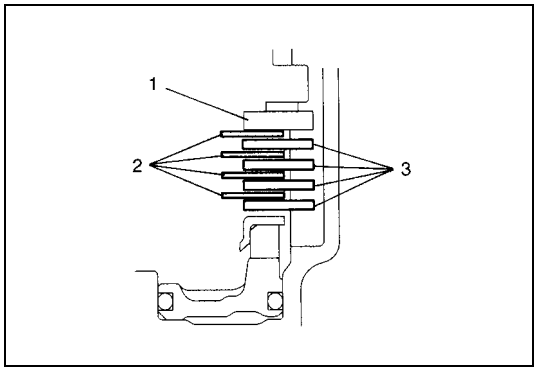

10) Apply A/T fluid to 1st and reverse brake discs (2) separator plates (3) and retaining plate (1), then install them to transaxle case.

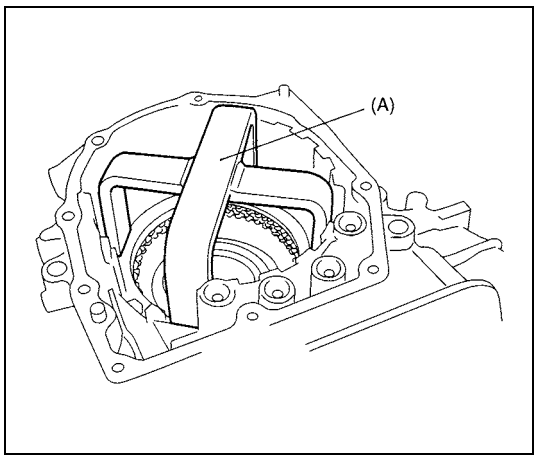

11) Compress 1st and reverse brake return spring using special tool and hydraulic press, then attach snap ring.

CAUTION:
Do not damage 1st and reverse brake return spring subassembly discs, plates and piston by pressing in 1st and reverse brake return spring subassembly passing through its original installing position over 0.8 mm (0.031 in.)

Special tool
(A): 09926-97620

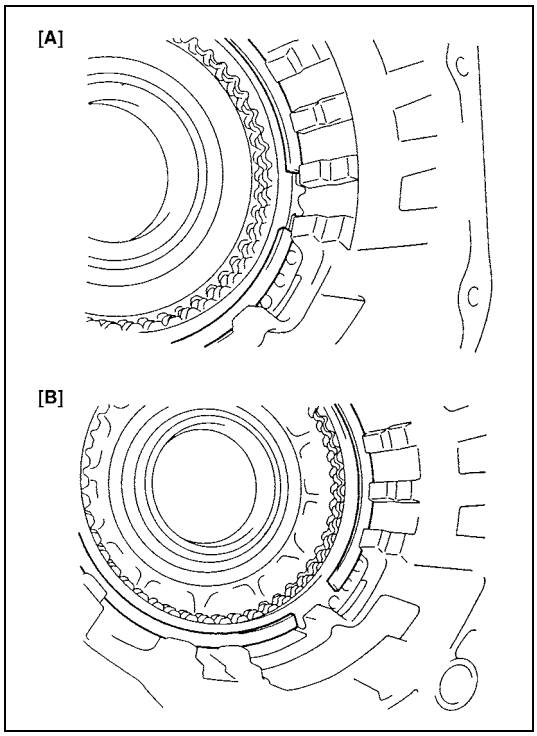

12) Install 1st and reverse brake plate snap ring so that its both ends would be positioned in correct locations as shown in figure.

[A] Correct
[B] Incorrect

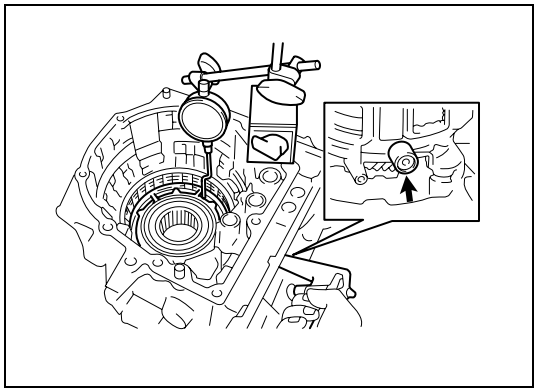

13) Using special tools, measure 1st and reverse brake piston stroke when compressed air (400 – 800 kPa, 4 – 8 kg/cm^2, 57 – 113 psi) is brown through oil hole.

Special tool
(A) 09900-20607
(B) 09900-20701
(C) 09952-06020

1st and reverse brake piston stroke
Standard: 0.791 – 1.489 mm (0.0311 – 0.0586 in.)

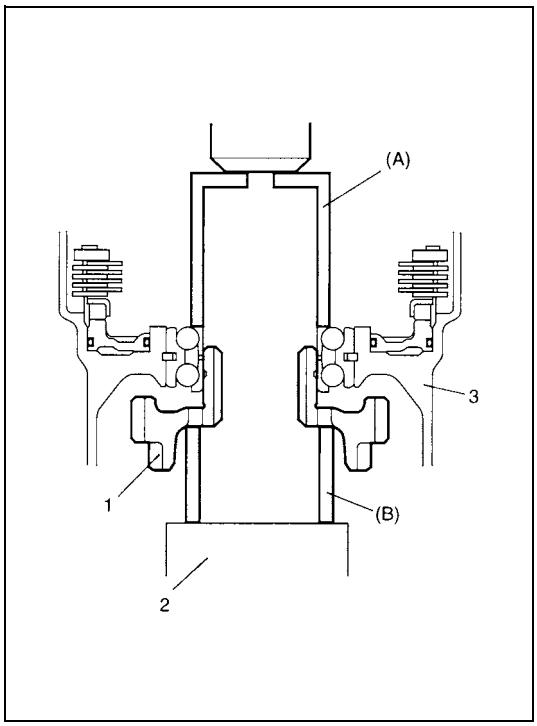

14) Install reduction drive gear (1) to transaxle case (3) by using special tools and hydraulic press.

CAUTION:
- **Do not use transaxle case as groundwork to press fit reduction drive gear.**
- **Do not give load more than 20 kN (2000 kg, 4410 lb) with hydraulic press. Otherwise, it may result in damaging reduction drive gear bearing.**

Special tool
(A): 09951-18210
(B): 09944-78210

2. Stand that can slightly lift transaxle case.

NOTE:

When replacing reduction drive gear, replace it together with reduction driven gear as a set.

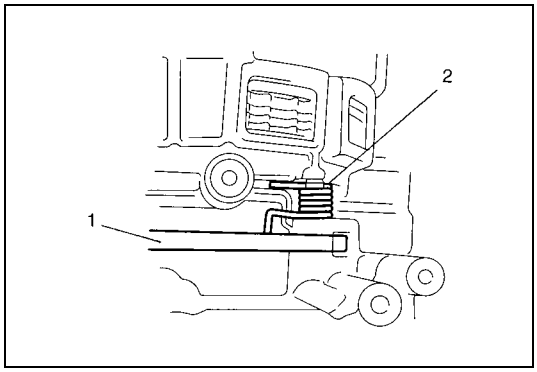

15) Install parking lock pawl (1) and spring (2). Apply A/T fluid to parking lock pawl shaft, then insert it into transaxle case.

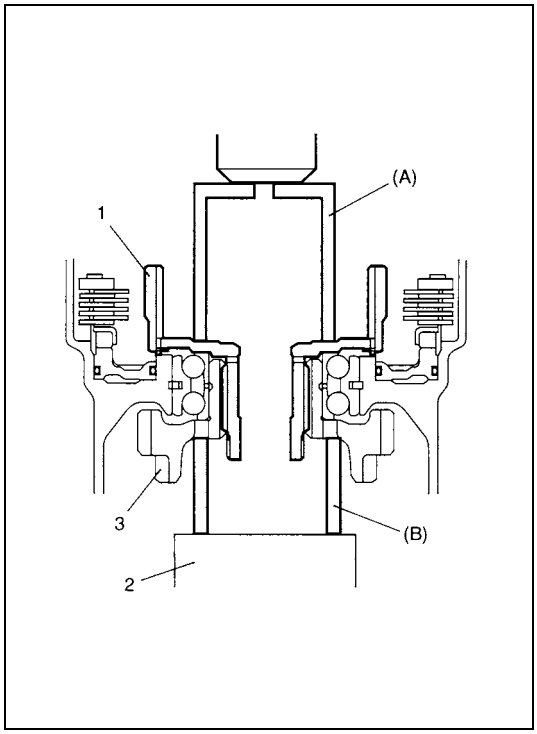

16) Install new planetary ring gear subassembly (1) to reduction drive gear (3) by using special tools and hydraulic press.

CAUTION:
- **Do not reuse planetary ring gear subassembly. Otherwise it may cause damage to planetary gear unit and/or reduction gears.**
- **Do not use transaxle case as groundwork to press fit planetary ring gear subassembly.**
- **Do not give load more than 20 kN (2000 kg, 4410 lb) with hydraulic press. Otherwise, it may result in damaging reduction drive gear bearing.**

Special tool
(A): 09951-18210
(B): 09944-78210

2. Stand that can slightly lift transaxle case.

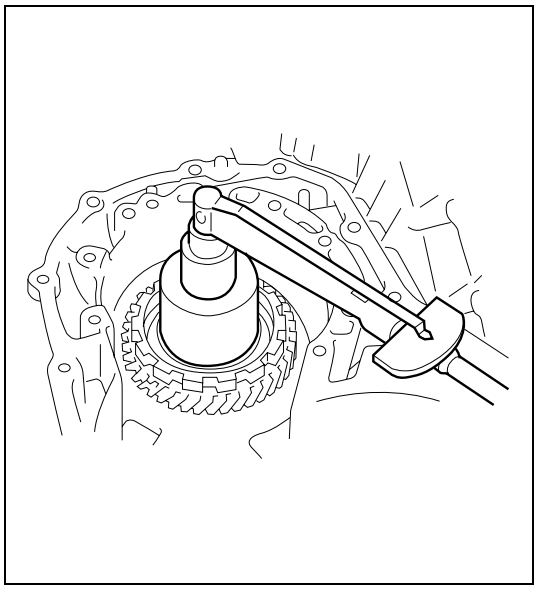

17) Tighten new reduction drive gear nut to planetary ring gear subassembly little by little until reduction drive gear bearing preload is within specification.

CAUTION:
- **Do not tighten nut over the specifications so that reduction drive gear nut would not be broken.**
- **Carry out this procedure on rubber mat in order not to damage transaxle case.**

Tightening torque
Reference: 100 N·m (10.0 kg-m, 72.5 lb-ft)

Reduction drive gear bearing preload (turning torque)
Standard: 0.05 – 0.35 N·m (0.5 – 3.5 kg-cm, 0.036 – 0.253 lb-ft)

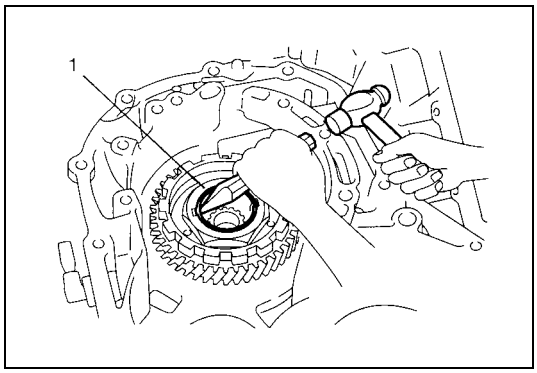

18) Caulk reduction drive gear nut (1).

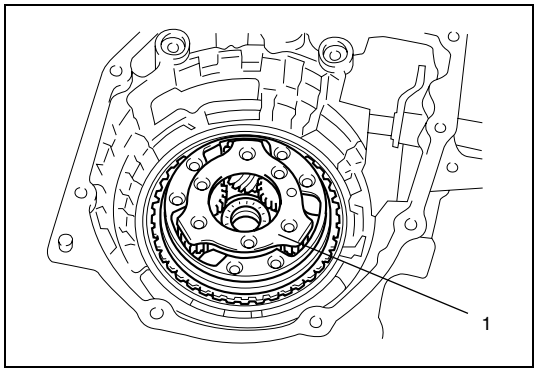

19) Apply A/T fluid to planetary gear assembly (1), then fit it to planetary ring gear assembly.

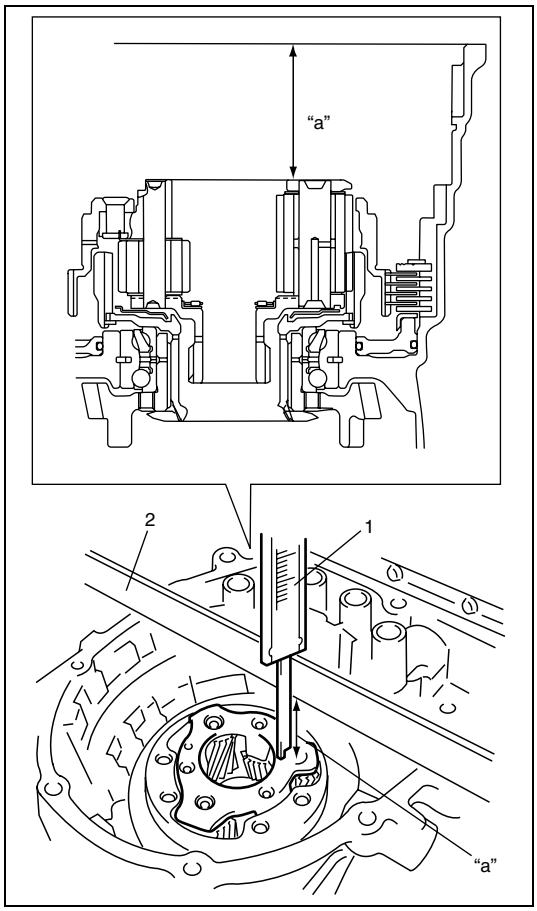

20) Check for correct installation of planetary gear assembly as follows.
Measure the distance "a" by using micrometer caliper (1) and straightedge (2). If measured value is out of specification, remove planetary gear assembly and reinstall it properly.

Distance between planetary gear assembly and mating surface of transaxle case
"a": 51.3 – 52.0 mm (2.020 – 2.047 in.)

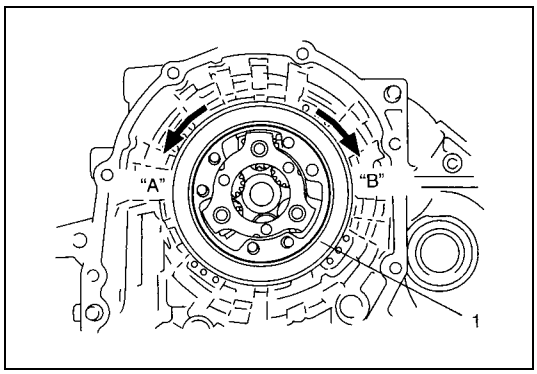

21) Apply A/T fluid to one-way clutch No.2 assembly (1), then install it to planetary gear assembly. After that, ensure that planetary carrier rotates only in counterclockwise direction "A", not in clockwise direction "B".

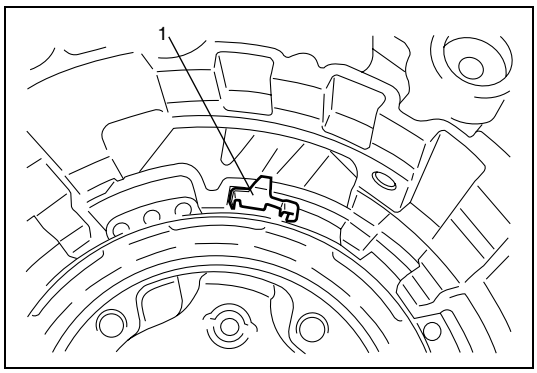

22) Install one-way clutch outer race retainer (1).

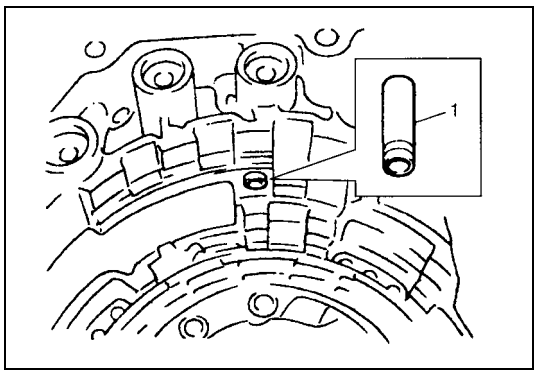

23) Apply A/T fluid to new brake drum gasket (1), then install it to transaxle case.

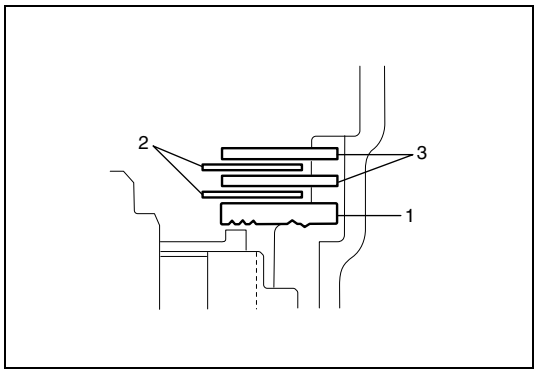

24) Apply A/T fluid to 2nd brake retaining plate (1), discs (2) and separator plates (3), then install them to transaxle case.

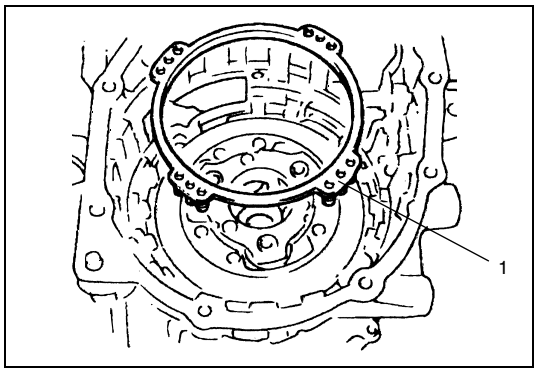

25) Install 2nd brake return spring subassembly (1) to transaxle case.

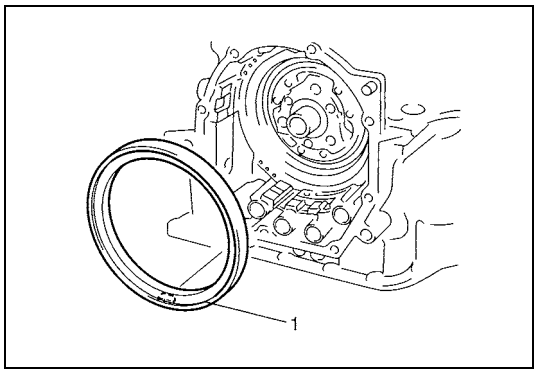

26) Apply A/T fluid to 2nd brake piston assembly (1), and align the projection of 2nd brake piston assembly with the groove of transaxle case, then put together.

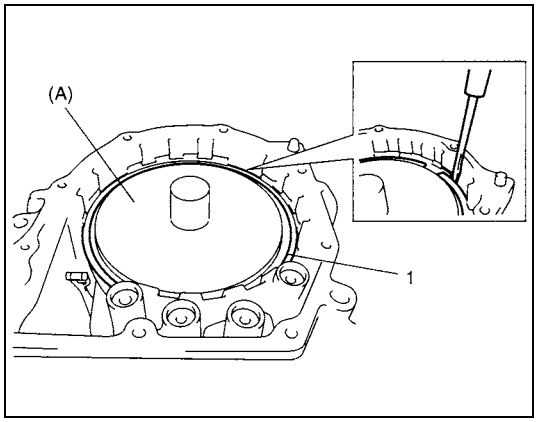

27) Install 2nd brake piston snap ring (1) by using special tool and hydraulic press.

CAUTION:
Do not damage 2nd brake piston assembly, return spring subassembly, plates and discs by pressing in 2nd brake assembly passing through its original installing position over 0.4 mm (0.016 in.).

Special tool
(A): 09926-96050

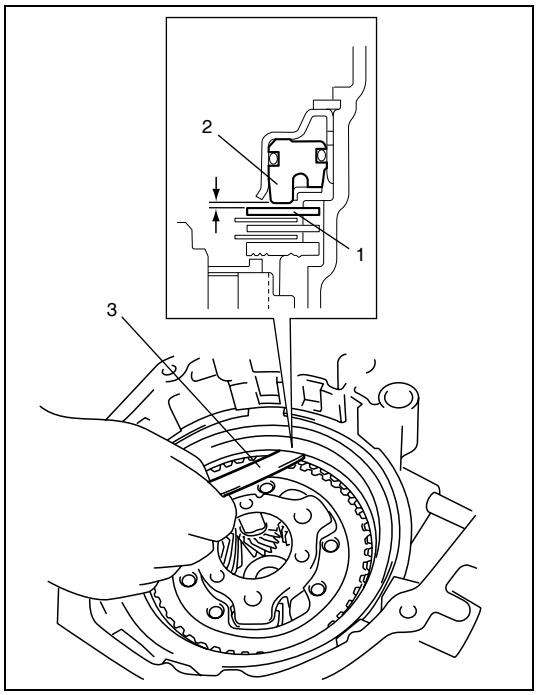

28) Check 2nd brake piston stroke by measuring clearance between 2nd brake separator plate (1) and piston (2) with feeler gauge (3).
If clearance (piston stroke) is out of specification replace clutch discs and plates with new ones.

2nd brake piston stroke
Standard: 0.40 – 1.25 mm (0.016 – 0.049 in.)

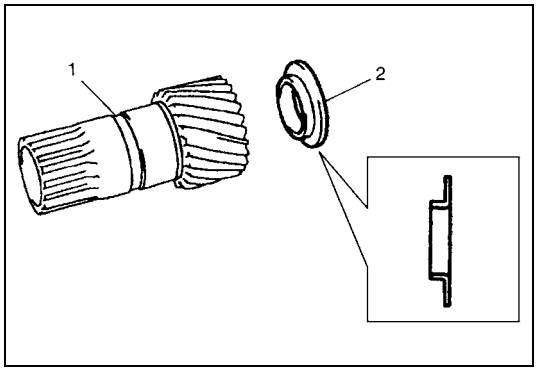

29) After applying A/T fluid to front sun gear thrust bearing race (2), install it to front planetary sun gear (1).

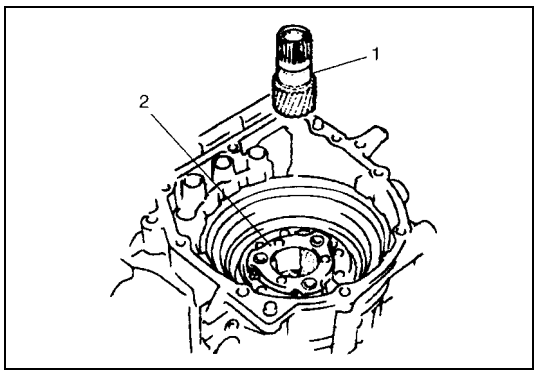

30) Apply A/T fluid to front planetary sun gear (1) and install it to planetary gear assembly (2).

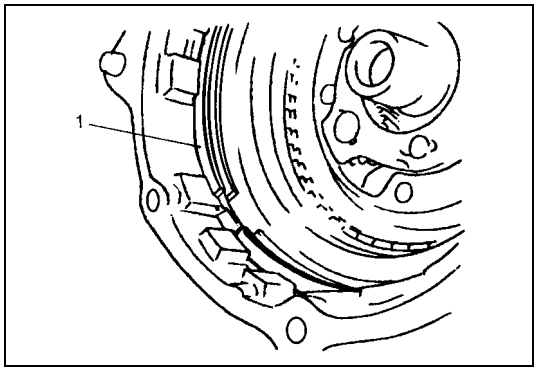

31) Install O/D and 2nd coast brake retaining plate snap ring (1).

CAUTION:
Be sure to install O/D and 2nd coast brake retaining plate snap ring correctly in groove of transaxle case.

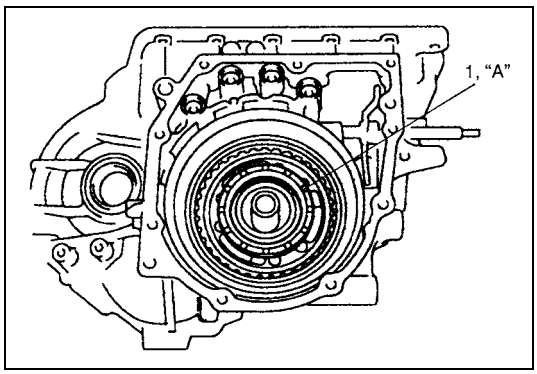

32) After applying grease to slide contact face of planetary carrier thrust washer (1), install it to planetary gear assembly.

"A": Grease 99000-25030

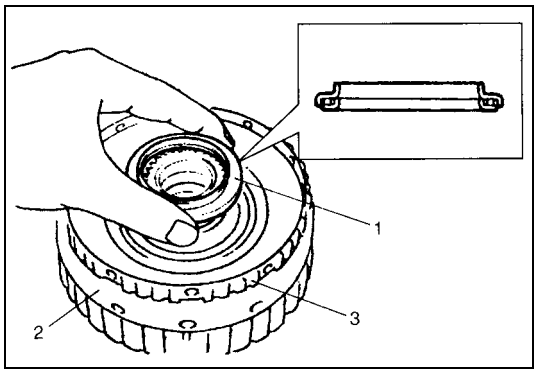

33) Apply A/T fluid to one-way clutch No.1 assembly (3) and install one-way clutch No.1 assembly (3) to rear planetary sun gear subassembly (2).
34) Apply A/T fluid to planetary gear thrust bearing (1), then install it to one-way clutch No.1 assembly (3).

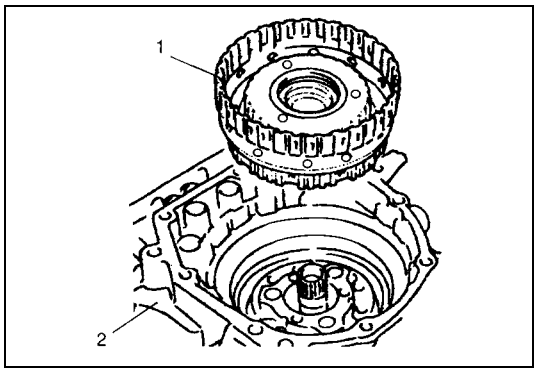

35) After applying A/T fluid to rear planetary sun gear subassembly and one-way clutch No.1 assembly (1), install them in transaxle case (2).

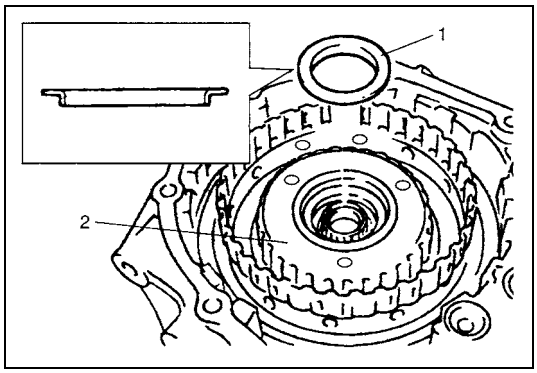

36) After applying A/T fluid to rear sun gear thrust bearing race (1), install it to rear planetary sun gear (2).

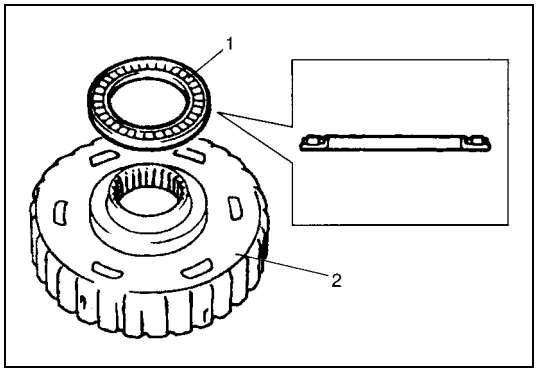

37) After applying A/T fluid to rear sun gear thrust bearing (1), install it to forward clutch hub (2).

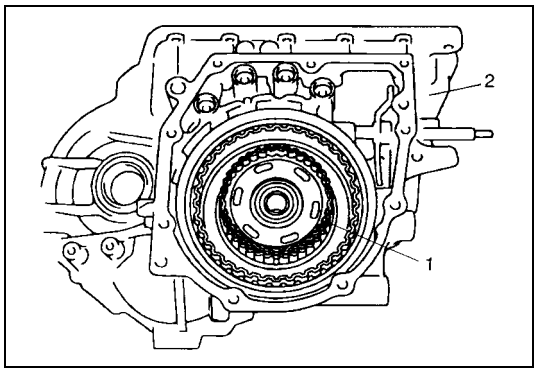

38) After applying A/T fluid to forward clutch hub (1), install it in transaxle case (2).

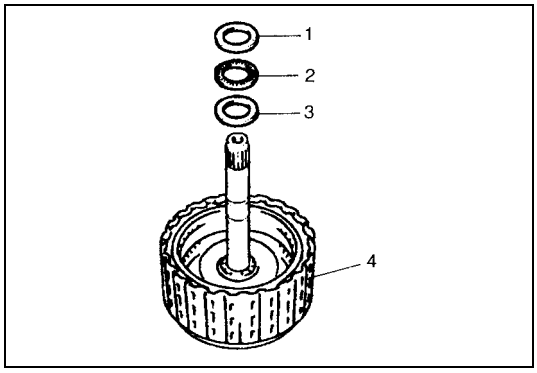

39) After applying A/T fluid to intermediate shaft thrust bearing rear race (3), thrust bearing (2) and front race (1), install them to forward and reverse clutch assembly (4).

Bearing race dimension

	Front race	Rear race
Outside diameter	**30.6 mm (1.20 in.)**	**28.2 mm (1.11 in.)**
Thickness	**2.0 mm (0.08 in.)**	**2.0 mm (0.08 in.)**

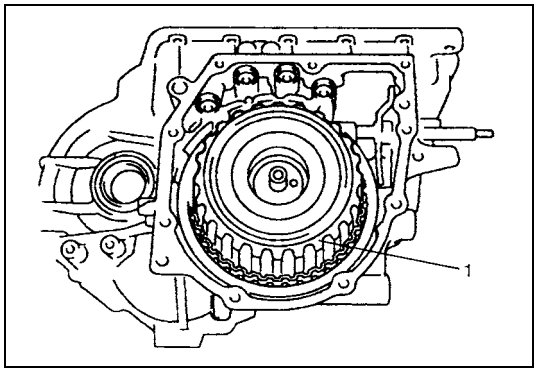

40) Apply A/T fluid to forward and reverse clutch assembly (1). Install forward and reverse clutch assembly while rotating clockwise and counter clockwise frequently to fit clutch discs to mating hubs.

NOTE:

Before installation, align teeth of forward and reverse clutch discs to facilitate installation.

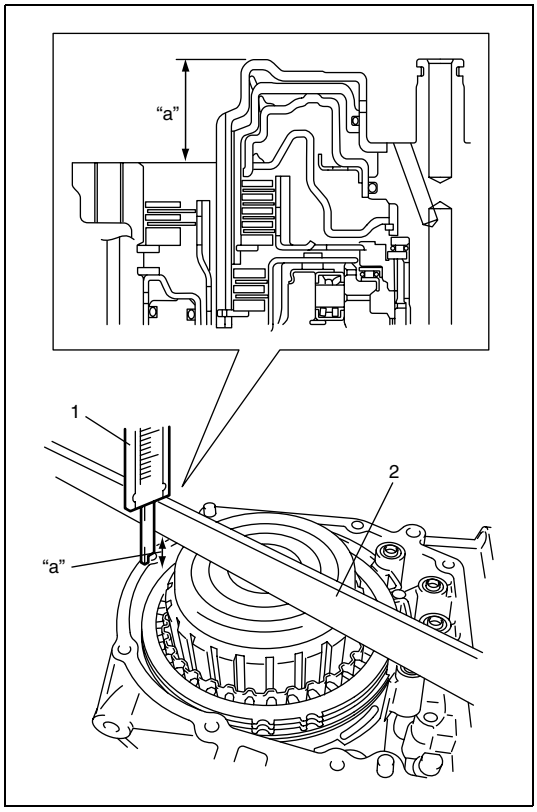

41) Check for correct installation of forward and reverse clutch assembly as follows.
Measure distance "a" by using micrometer caliper (1) and straightedge (2). If out of specification, remove forward and reverse clutch assembly, forward clutch hub, rear planetary sun gear subassembly and one-way clutch No.1 assembly, and reinstall them properly.

Distance between forward and reverse clutch assembly and mating surface of transaxle case
"a": 27.1 – 29.4 mm (1.067 – 1.157 in.)

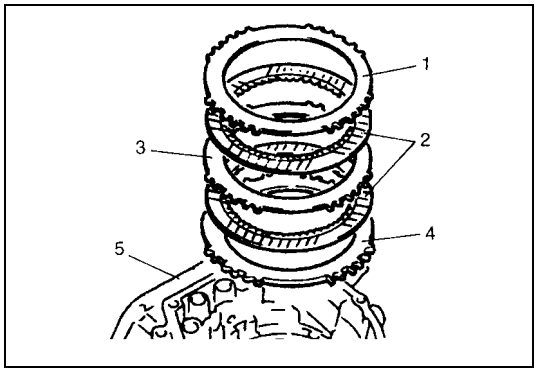

42) After applying A/T fluid to O/D and 2nd coast brake retaining plate (4), separator plate (3), discs (2) and rear plate (1), install them to transaxle case (5).

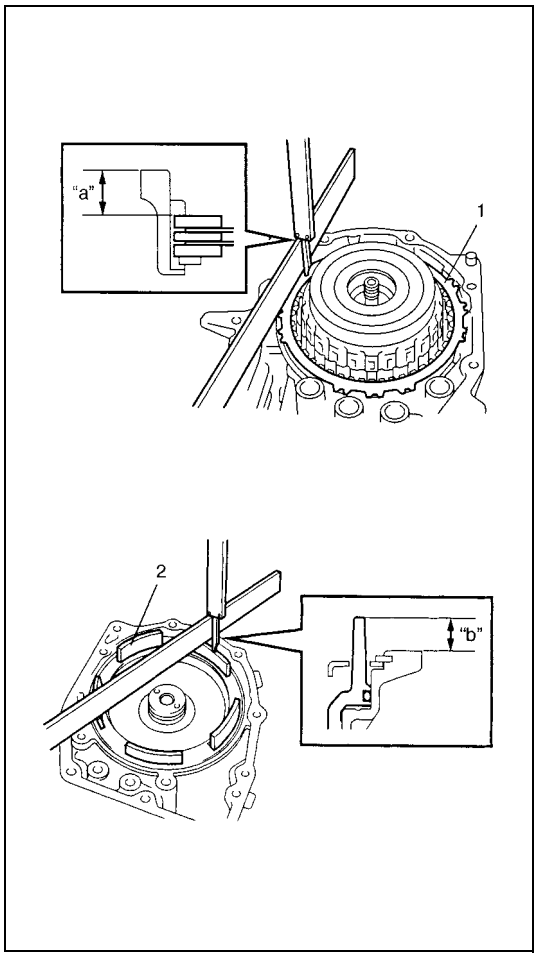

43) Measure O/D and 2nd coast brake piston stroke.
- Measure dimension "a" from end face of transaxle case to O/D and 2nd coast brake rear plate (1) using straightedge and micrometer caliper.
- Measure dimension "b" from O/D and 2nd coast brake piston (2) to rear cover assembly mating surface using straightedge and micrometer caliper.
- Calculate piston stroke from measured value of dimensions "a" and "b".
- Piston stroke = "a" – "b"

O/D and 2nd coast brake piston stroke
standard: 0.65 – 1.05 mm (0.026 – 0.041 in.)

When piston stroke is out of specification, select O/D and 2nd coast brake rear plate with proper thickness from among the list below and replace it.

Available O/D and 2nd coast brake rear plate thickness

Thickness	Identification mark
1.8 mm (0.071 in.)	1
2.0 mm (0.079 in.)	2
2.2 mm (0.087 in.)	3
2.4 mm (0.094 in.)	4
2.6 mm (0.102 in.)	5
5.0 mm	

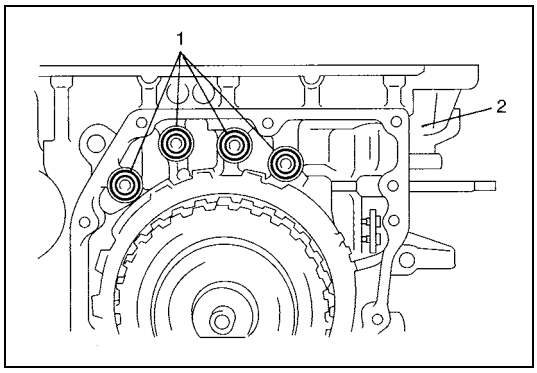

44) After applying A/T fluid to new 2nd brake gaskets (1), install them to transaxle case (2).

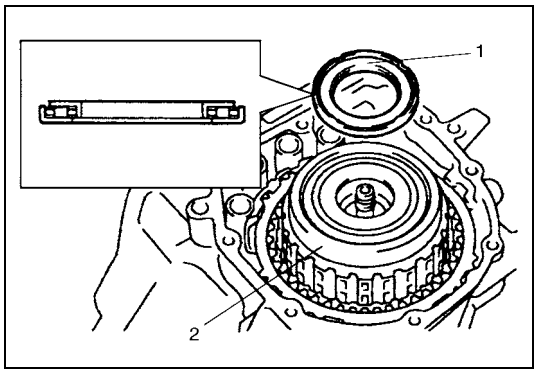

45) After applying A/T fluid to reverse clutch drum thrust bearing (1), install it to forward and reverse clutch assembly (2).

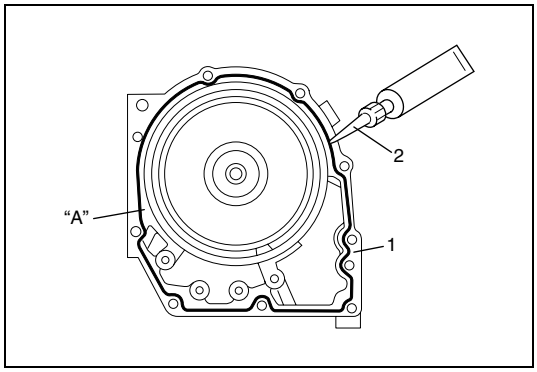

46) Remove sealant attached to mating surface of transaxle rear cover (1) completely.
47) Apply sealant to mating surface of transaxle rear cover (1) by using a nozzle (2) as shown in figure by such amount that its section is 1.2 mm (0.047 in.) in diameter.

"A": Sealant 99000-31230

48) Install transaxle rear cover assembly on transaxle case.

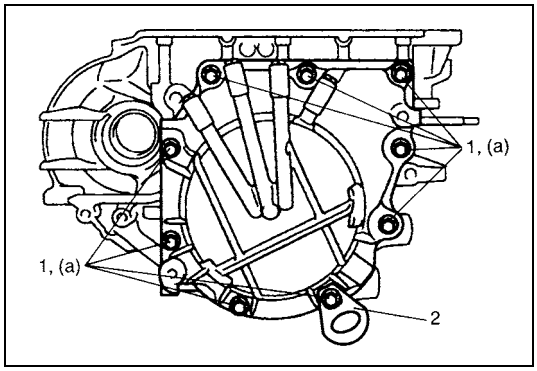

49) Install hook (2) to location shown in figure.

Tightening torque
Rear cover bolts
(a): 25 N·m (2.5 kg-m, 18.0 lb-ft)

50) Tighten rear cover bolts (1).

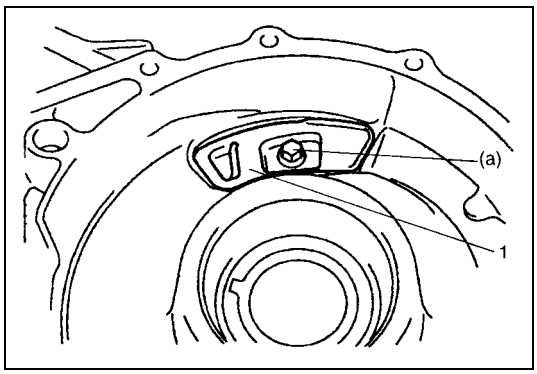

51) Install fluid reservoir LH plate (1).

Tightening torque
Fluid reservoir LH plate bolt
(a): 10 N·m (1.0 kg-m, 7.5 lb-ft)

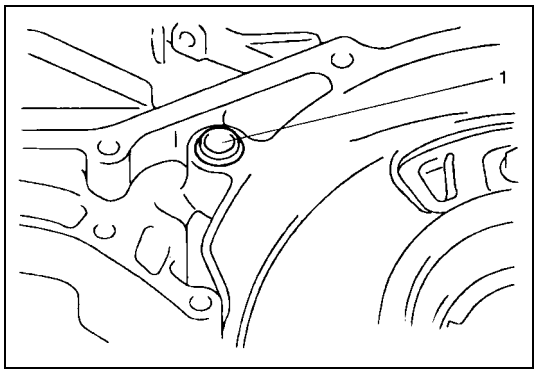

52) After applying A/T fluid to new governor apply No.2 gasket (1), install it to transaxle case.

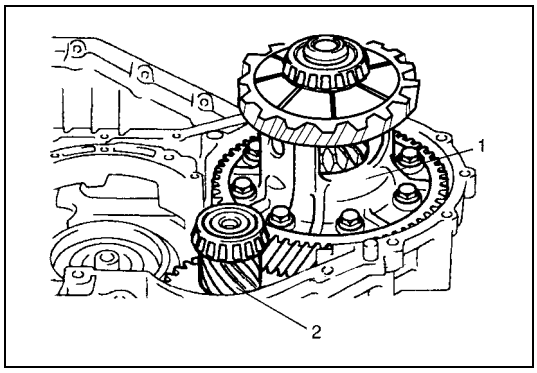

53) After applying A/T fluid to differential assembly (1) and countershaft assembly (2), install them to transaxle case.

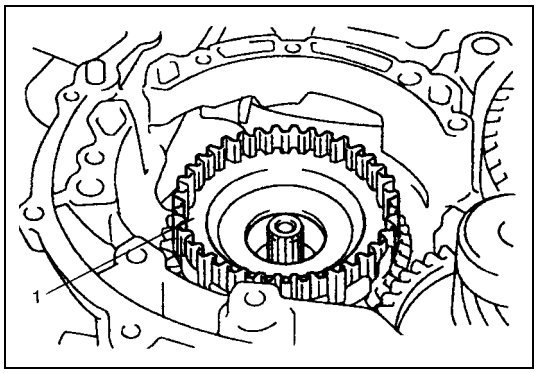

54) After applying A/T fluid to direct clutch hub (1), install it to planetary gear assembly.

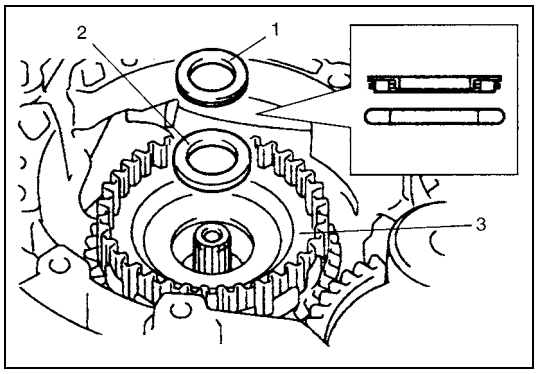

55) After applying A/T fluid to input shaft rear thrust bearing (1) and thrust bearing race (2), install them into direct clutch hub (3).

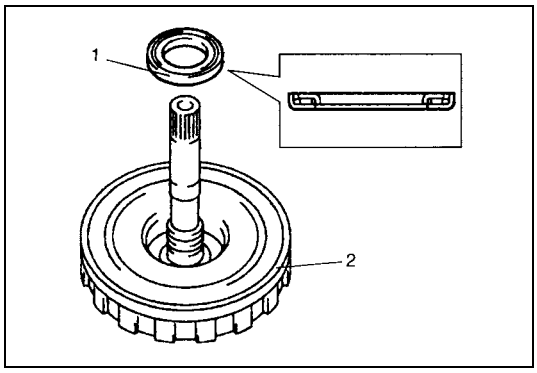

56) After applying A/T fluid to input shaft front thrust bearing (1), install it to direct clutch assembly (2).

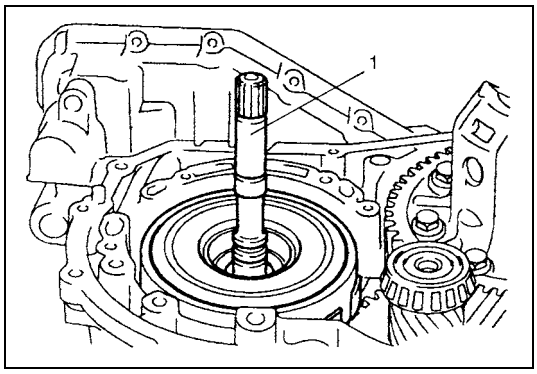

57) Apply A/T fluid to direct clutch assembly (1).
Install direct clutch assembly while rotating clockwise and counter clockwise frequently to fit clutch discs to mating hub.

NOTE:

Before installation, align teeth of direct clutch discs to facilitate installation.

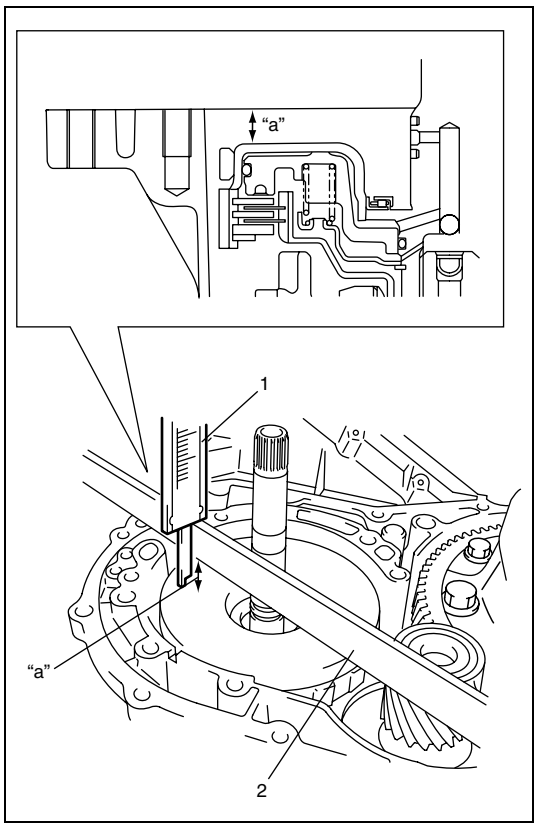

58) Check for correct installation of direct clutch assembly as follows.
Measure distance "a" by using micrometer caliper (1) and straightedge (2). If out of specification, remove direct clutch assembly, direct clutch hub and reinstall them properly.

Distance between direct clutch assembly and mating surface of transaxle case
"a": 10.5 – 11.3 mm (0.413 – 0.445 in.)

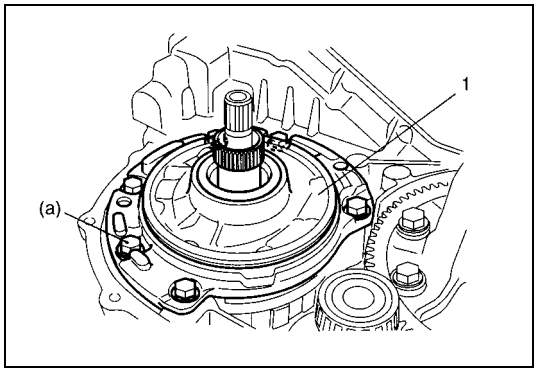

59) Install oil pump assembly (1) to transaxle case.

Tightening torque
Oil pump assembly bolts
(a): 25 N·m (2.5 kg-m, 18.0 lb-ft)

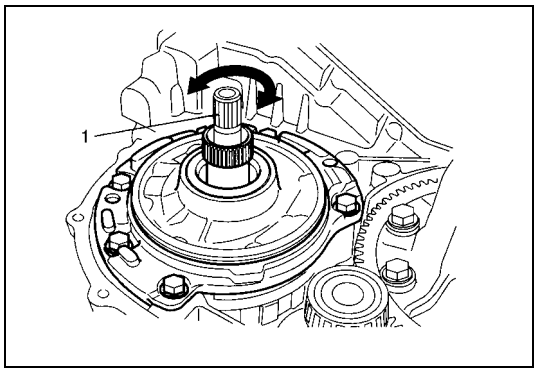

60) Make sure that input shaft (1) turns smoothly.

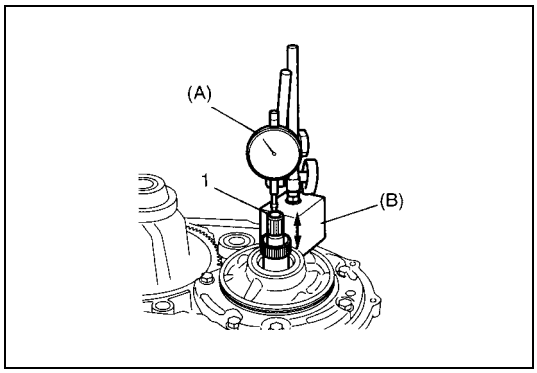

61) Measure input shaft thrust play.
Apply dial gauge onto input shaft end (1) and measure thrust play of input shaft.

Special tool
(A): 09900-20607
(B): 09900-20701

Input shaft thrust play: 0.3 – 0.9 mm (0.012 – 0.035 in.)

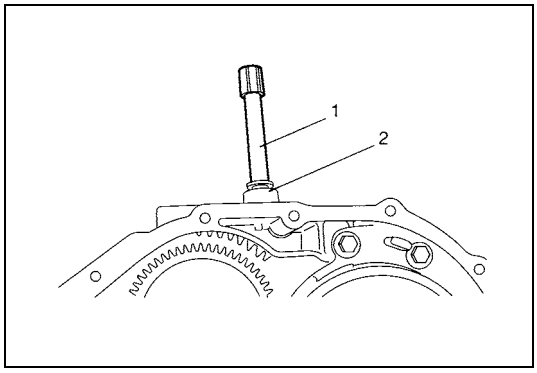

62) After applying A/T fluid to new O-ring, fit it to breather union (2). Then install breather union to transaxle case.
63) Install breather hose (1).

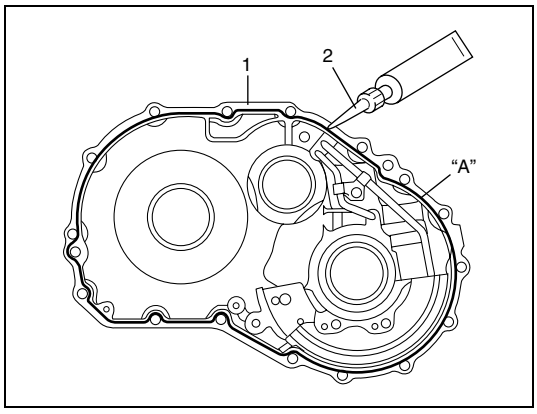

64) Wipe off and clean mating surface between transaxle case (1) and torque converter housing.
65) Apply sealant to torque converter housing (1) by using a nozzle (2) as shown in figure by such amount that its section is 1.2 mm (0.047 in.) in diameter.

"A": Sealant 99000-31230

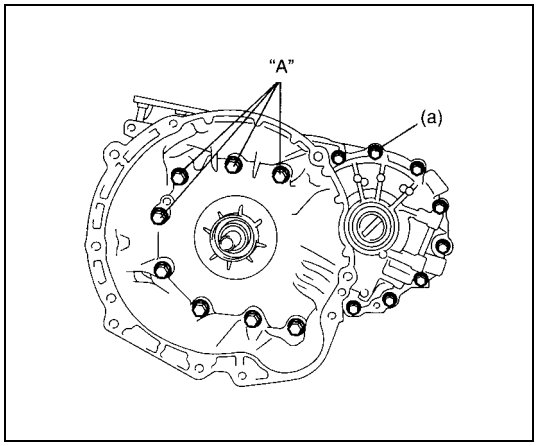

66) Install torque converter housing to transaxle case, tighten bolts to specified torque.

CAUTION:
Apply sealant to threads of four bolts shown in figure before tightening.

"A": Sealant 99000-31230

Tightening torque
Torque converter housing bolts
(a): 33 N·m (3.3 kg-m, 24.0 lb-ft)

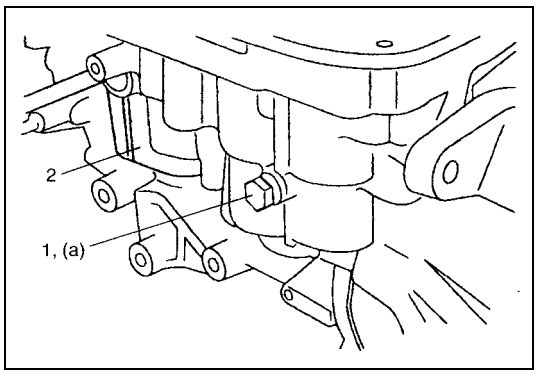

67) After applying A/T fluid to new O-ring, fit it to transaxle case plug (1). Then install the transaxle case plug to transaxle case (2).

Tightening torque
Transaxle case plug
(a): 7.5 N·m (0.75 kg-m, 5.5 lb-ft)

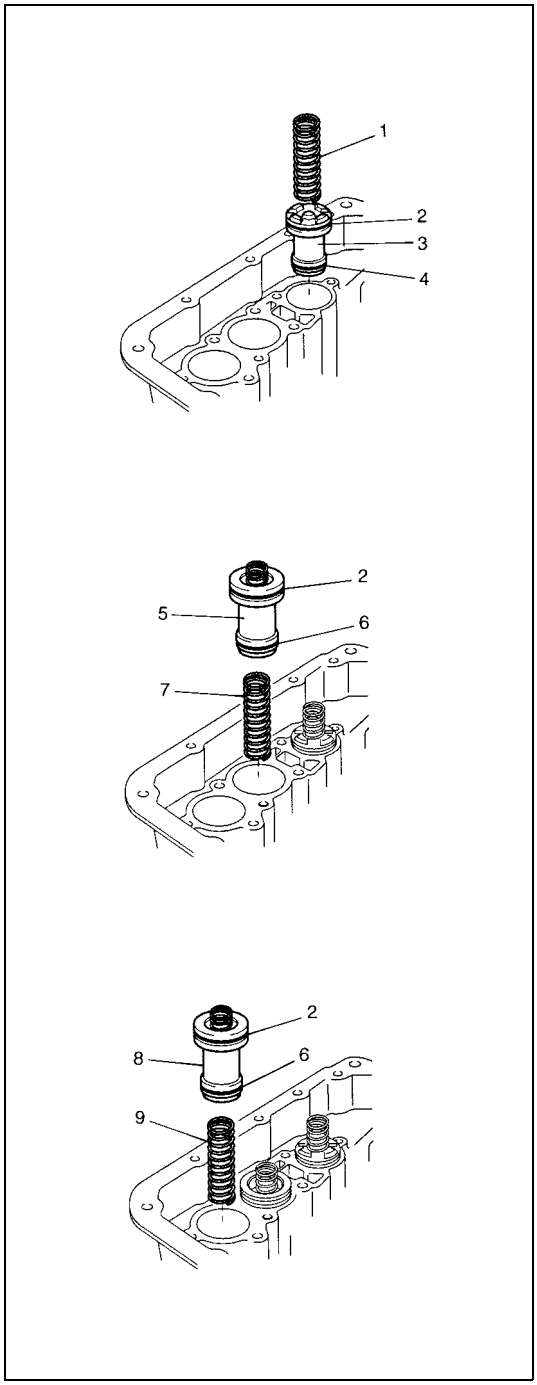

68) Install new O-rings to each accumulator piston and apply A/T fluid to them.

Accumulator O-ring dimension

O-ring name	Inside diameter	Section diameter
B1 accumulator O-ring (Large) (2) C1 accumulator O-ring (Large) (2) C2 accumulator O-ring (Large) (2) (Above three O-rings are same.)	29.4 mm (1.16 in.)	2.6 mm (0.10 in.)
B1 accumulator O-ring (Small) (4)	19.7 mm (0.78 in.)	2.6 mm (0.10 in.)
C1 accumulator O-ring (Small) (6) C2 accumulator O-ring (Small) (6) (Above two O-rings are same.)	21.8 mm (0.86 in.)	2.6 mm (0.10 in.)

NOTE:

Make sure that O-rings are not twisted or caught when installing.

69) Install B1, C1, C2 accumulator pistons and springs.

Accumulator piston identification

Piston name	Identification (Embossed letters on piston)
B1 accumulator piston (3)	SB-1
C1 accumulator piston (5)	S2C-1
C2 accumulator piston (8)	S2C-2

Accumulator spring identification

Spring name	Color of identification paint
B1 accumulator No.2 spring (1)	Pink
C1 accumulator No.2 spring (7)	Light Blue
C2 accumulator No.2 spring (9)	Yellow

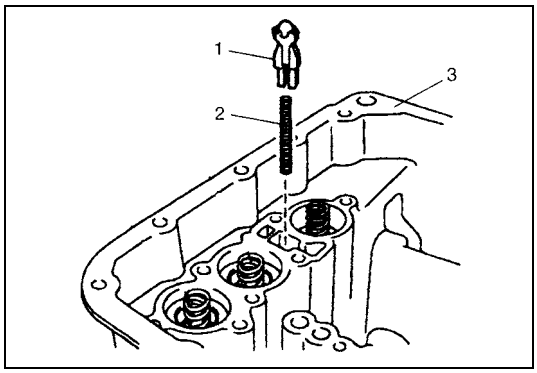

70) After applying A/T fluid to cooler check valve (1) and spring (2), install them to transaxle case (3).

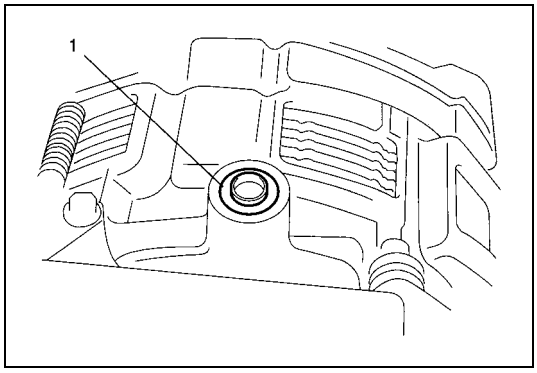

71) After applying A/T fluid to new governor apply No.1 gasket (1), install it to transaxle case.

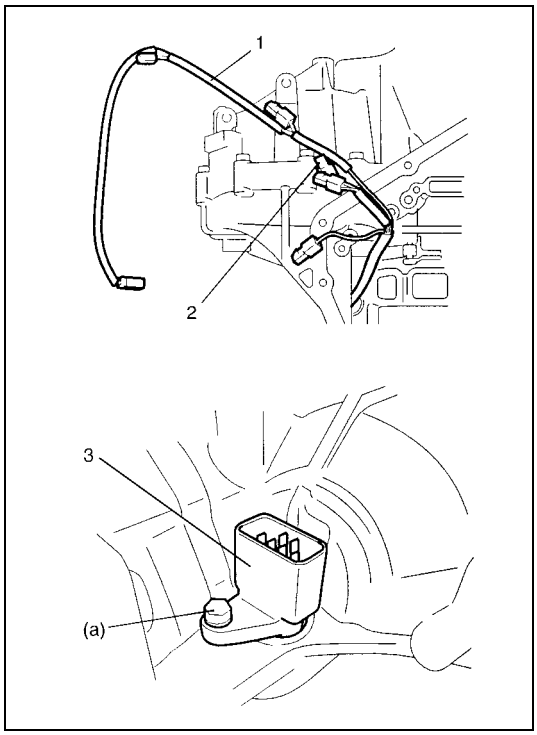

72) After applying A/T fluid to new O-ring, fit it to valve body harness connector (3), then install valve body harness to transaxle case.

CAUTION:
When put valve body harness (1) into transaxle case, take care not to damage transmission fluid temperature sensor (2) at narrow entrance of case.
Careless sensor treatment might cause sensor malfunction.

Tightening torque
Valve body harness connector bolt
(a): 5.5 N·m (0.55 kg-m, 4.0 lb-ft)

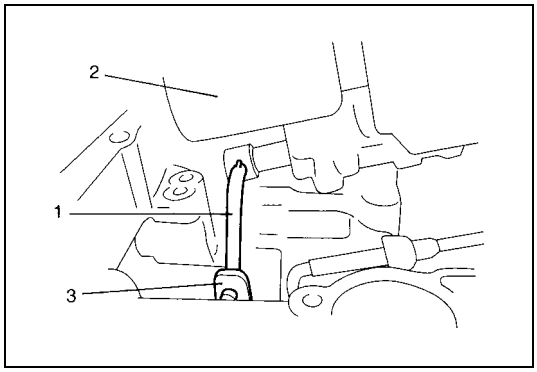

73) Install manual valve rod (1) to manual valve lever (3) and then install valve body assembly (2) to transaxle case.

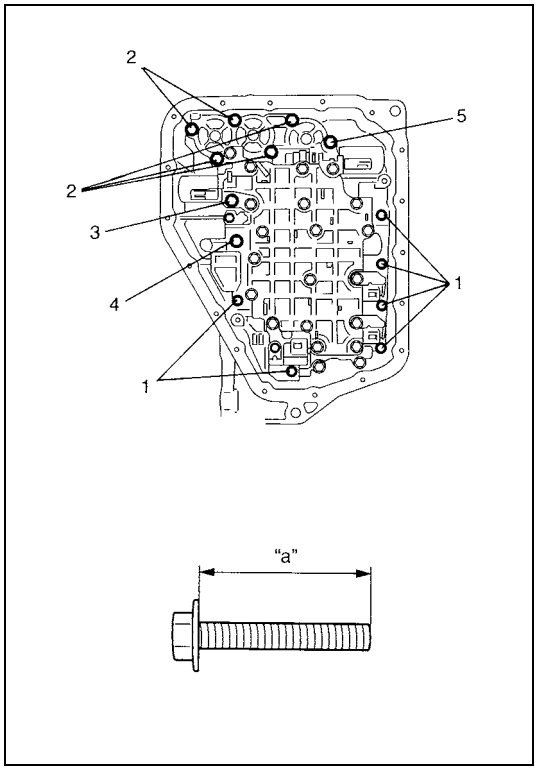

74) Tighten valve body bolts to specified torque.

Tightening torque
Valve body bolts
11 N·m (1.1 kg-m, 8.0 lb-ft)

Valve body bolt length

Bolt	Length "a"	Pieces
A	20 mm (0.79 in.)	6
B	28 mm (1.10 in.)	5
C	49 mm (1.93 in.)	1
D	36 mm (1.42 in.)	1
E	40 mm (1.58 in.)	1

1. Bolt A
2. Bolt B
3. Bolt C
4. Bolt D
5. Bolt E

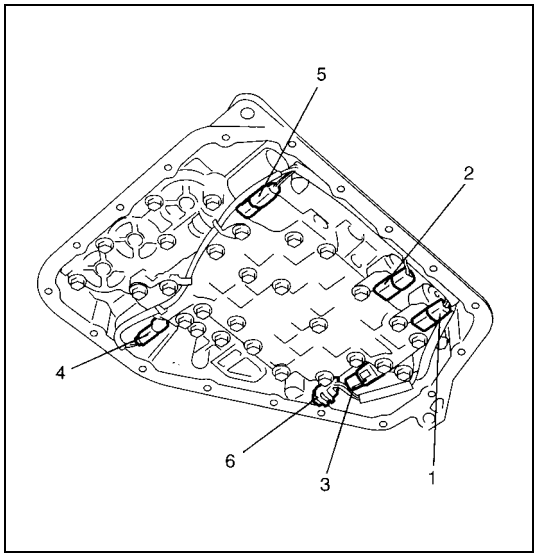

75) Connect solenoid connectors to solenoid valves identifying their installing positions by wire colors, and install transmission fluid temperature sensor to its clamp.

Solenoid valve coupler	Wire Color
Shift solenoid valve-A (1)	White
Shift solenoid valve-B (2)	Black
Timing solenoid valve (3)	Yellow
TCC (Lock-up) solenoid valve (4)	Light Green
Pressure control solenoid valve (5)	Gray + Green
Transmission fluid temperature sensor (6)	Orange

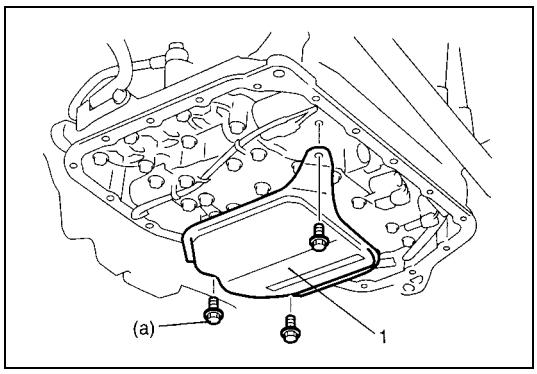

76) Install oil strainer assembly (1).

Tightening torque
Oil strainer bolts
(a): 10 N·m (1.0 kg-m, 7.5 lb-ft)

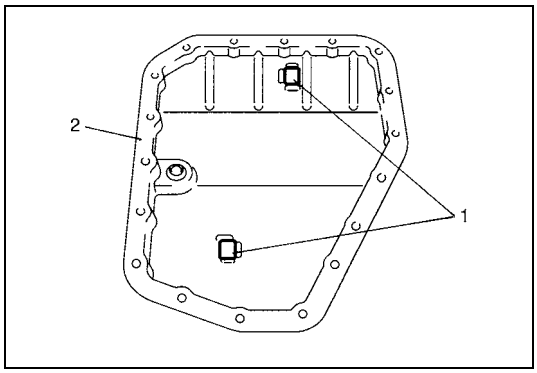

77) Install oil cleaner magnets (1) in oil pan (2).

NOTE:

If metal particles are attached to the magnets, clean them before installing.

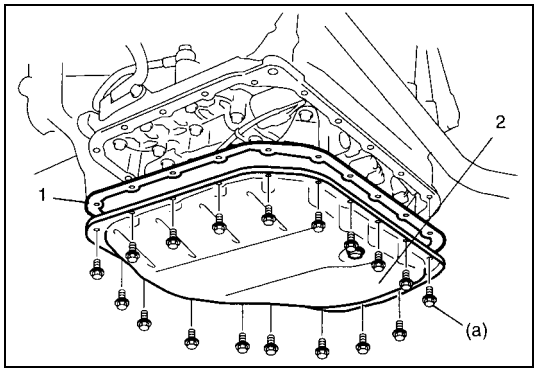

78) Install new oil pan gasket (1) between transaxle case and oil pan (2).

Tightening torque
Oil pan bolts
(a): 7.0 N·m (0.7 kg-m, 5.0 lb-ft)

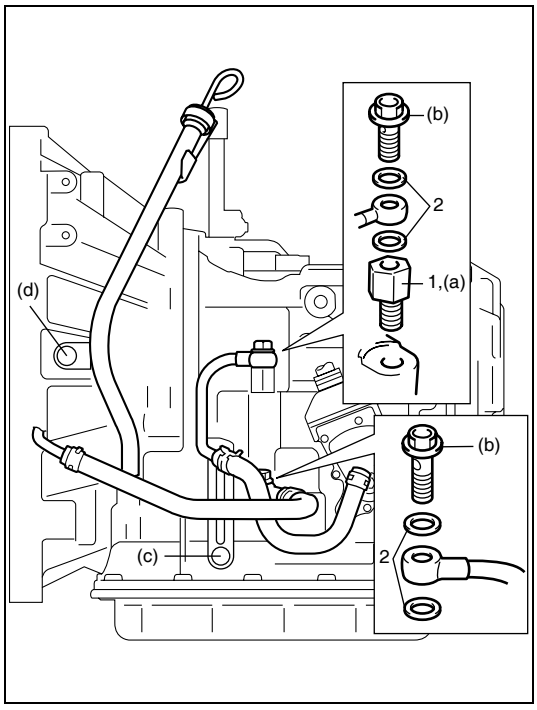

79) After applying A/T fluid to new O-ring, fit it to fluid inlet union (1). Then install fluid outlet union to transaxle case.

Tightening torque
Fluid outlet union
(a): 25 N·m (2.5 kg-m, 18.0 lb-ft)

80) Install new gasket (2) and then install fluid cooler pipes.

Tightening torque
Fluid cooler pipe bolt
(b): 22 N·m (2.2 kg-m, 16.0 lb-ft)
Fluid cooler pipe bracket bolt
(c): 10 N·m (1.0 kg-m, 7.5 lb-ft)

81) After applying A/T fluid to new O-ring, fit it to fluid filler tube. Then install fluid filler tube to transaxle case.

Tightening torque
Fluid filler tube bolt
(d): 10 N·m (1.0 kg-m, 7.5 lb-ft)

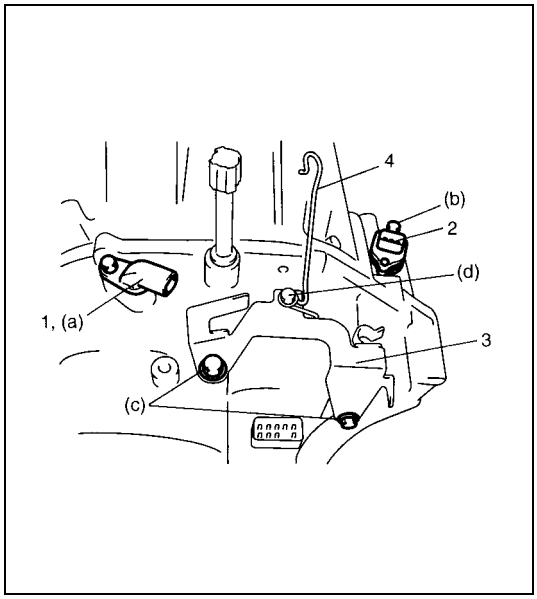

82) Apply A/T fluid to O-rings of each sensor and install input shaft speed sensor (1) and output shaft speed sensor (VSS) (2).

Tightening torque
Input shaft speed sensor bolt
(a): 5.5 N·m (0.55 kg-m, 4.0 lb-ft)
Output shaft speed sensor (VSS) bolt
(b): 13 N·m (1.3 kg-m, 9.5 lb-ft)

83) Install harness bracket (3) and select cable clamp (4).

Tightening torque
Harness bracket bolts
(c): 23 N·m (2.3 kg-m, 17.0 lb-ft)
Select cable clamp bolt
(d): 10 N·m (1.0 kg-m, 7.5 lb-ft)

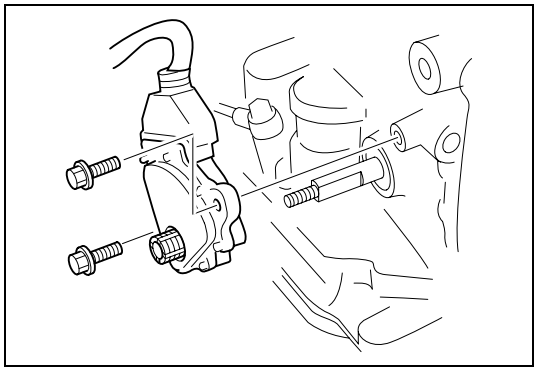

84) Install transmission range sensor to transaxle case, tighten bolts temporarily at this step.

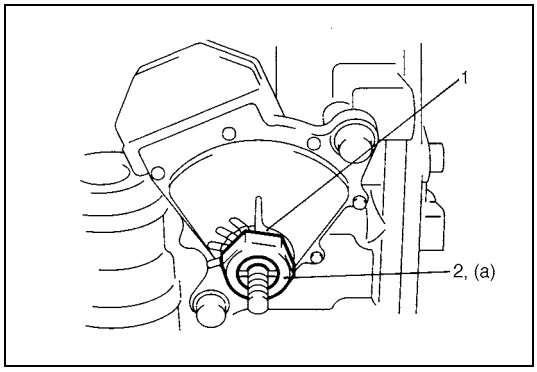

85) Install lock washer (1) and tighten lock nut (2) to specified torque.

Tightening torque
Transmission range sensor lock nut
(a): 7 N·m (0.7 kg-m, 5.0 lb-ft)

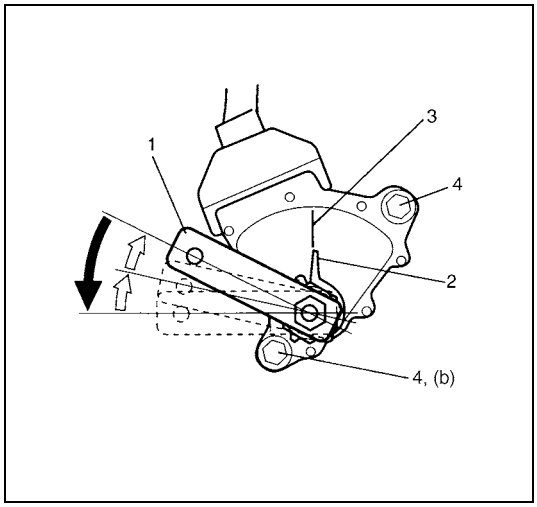

86) Install manual select lever (1) temporarily at this step.
87) After shifting manual select lever counterclockwise fully, select “N” range position by bringing it back 2 notches clockwise.
88) Remove manual select lever (1) at this step.
89) Loosen sensor bolts (4) and align needle direction shaped on lock washer (2) with “N” reference line (3) on transmission range sensor by moving sensor in rotative direction.
90) Tighten sensor bolts (4) to specified torque.

Tightening torque
Transmission range sensor bolts
(b): 5.5 N·m (0.55 kg-m, 4.0 lb-ft)

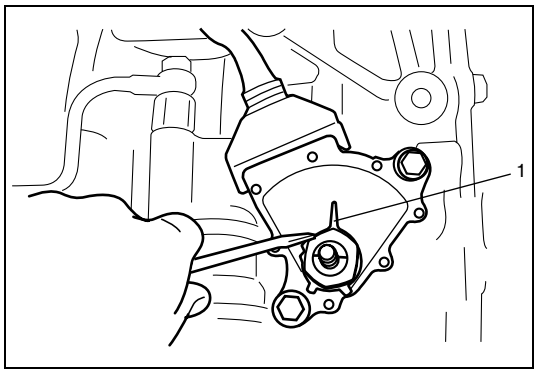

91) Bend dents of lock washer (1) in order to prevent displacement of lock washer.

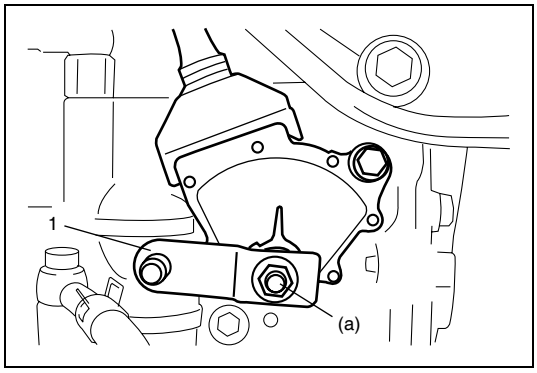

92) Install manual select lever (1).

Tightening torque
Manual select lever nut
(a): 13 N·m (1.3 kg-m, 9.5 lb-ft)

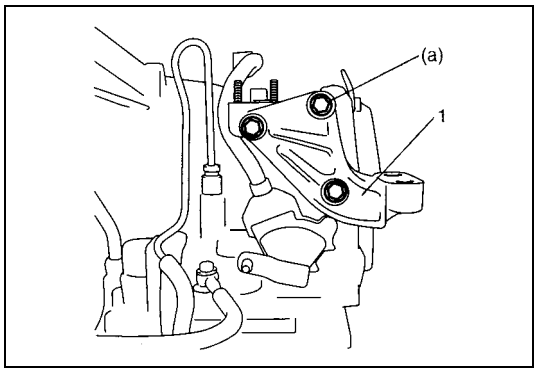

93) Install engine mounting LH bracket (1).

Tightening torque
Engine mounting LH bracket bolts
(a): 55 N·m (5.5 kg-m, 40.0 lb-ft)

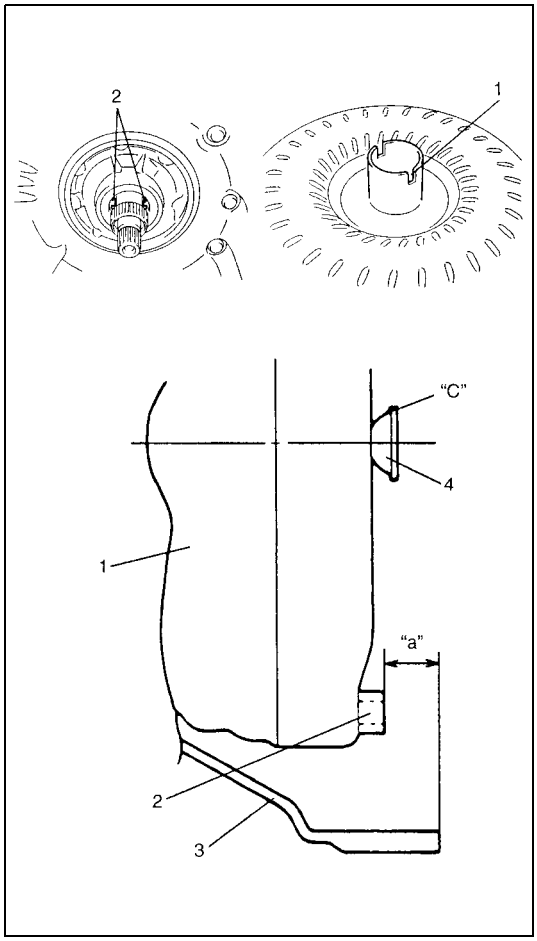

CAUTION:

- **Before installing converter, make sure that its pump hub portion is free from nicks, burrs or damage which may cause oil seal to leak.**
- **Be very careful not to drop converter on oil pump gear. Damage in gear, should it occur, may cause a critical trouble.**

- Install torque converter aligning grooves (1) of torque converter and projection (2) of oil pump drive gear.
- Install torque converter, using care not to damage oil seal of oil pump.
- After installing torque converter, check that distance "a" is within specification.

Torque converter installing position
"a": More than 19.9 mm (0.783 in.)

- Check torque converter for smooth rotation.
- Apply grease around cup at the center of torque converter.

"C": Grease 99000-25010

1.	Torque converter
2.	Flange nut
3.	Torque converter housing
4.	Cup

Tightening Torque Specification

Fastening part	Tightening torque		
	N•m	kg-m	lb-ft
A/T fluid drain plug	17	1.7	12.5
Output shaft speed sensor bolt	13	1.3	9.5
Input shaft speed sensor bolt	5.5	0.55	4.0
Transaxle case plug	7.5	0.75	5.5
Solenoid valve bolts	11	1.1	8.0
Rear cover plugs	7.5	0.75	5.5
Transaxle and engine fastening bolts and nut	85	8.5	61.5
Drive plate to torque converter bolts	19	1.9	14.0
Lower stiffener bolts	55	5.5	40.0
Starter motor bolt and nut	50	5.0	36.5
Oil pump subassembly bolts	10	1.0	7.5
Valve body bolts	11	1.1	8.0
Final gear bolts	78	7.8	56.5
Reduction drive gear nut (Reference)	100	10.0	72.5
Rear cover bolts	25	2.5	18.0
Fluid reservoir LH plate bolt	10	1.0	7.5
Manual detent spring bolt	10	1.0	7.5
Parking lock pawl bracket bolts	7.5	0.75	5.5
Oil pump assembly bolts	25	2.5	18.0
Torque converter housing bolts	33	3.3	24.0
Torque converter housing plugs	7.5	0.75	5.5
Lubrication tube clamp bolt	5.5	0.55	4.0
Fluid reservoir RH plate bolts	5.5	0.55	4.0
Valve body harness connector bolt	5.5	0.55	4.0
Oil pan bolts	7.0	0.7	5.0
Oil strainer bolts	10	1.0	7.5
Fluid outlet union	25	2.5	18.0
Fluid cooler pipe flare nut	35	3.5	25.5
Fluid cooler pipe bolt	22	2.2	16.0
Fluid cooler pipe bracket bolt	10	1.0	7.5
Fluid filler tube bolt	10	1.0	7.5
Transmission range sensor lock nut	7	0.7	5.0
Transmission range sensor bolts	5.5	0.55	4.0
Manual select lever nut	13	1.3	9.5
Engine mounting LH bracket bolts	55	5.5	40.0
Harness bracket bolts	23	2.3	17.0
Select cable clamp bolt	10	1.0	7.5

Special Tool

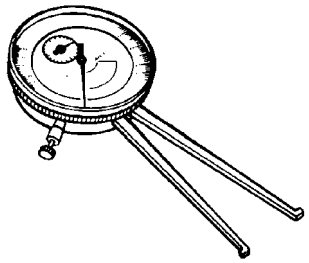 09900-20605 Dial caliper gauge	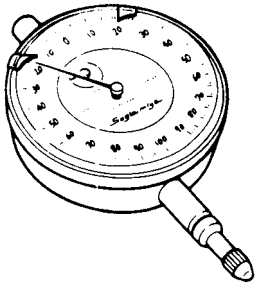 09900-20607 Dial gauge	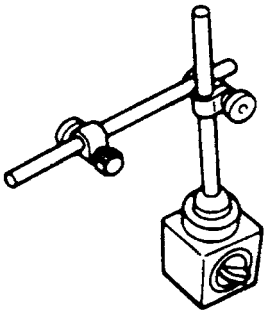 09900-20701 Magnetic stand	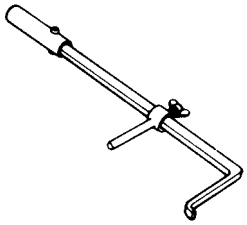 09913-50121 Oil seal remover
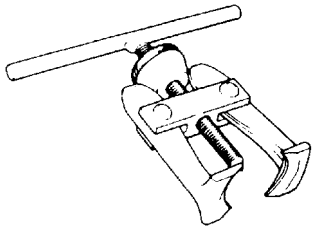 09913-61510 Bearing puller	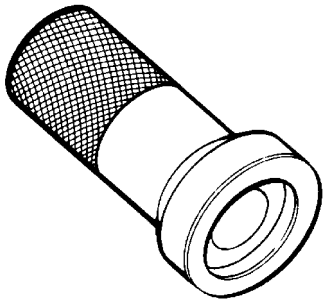 09913-70123 Bearing installer	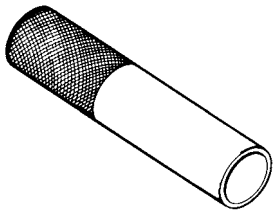 09913-84510 Bearing installer	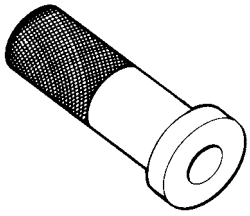 09913-85210 Bearing installer
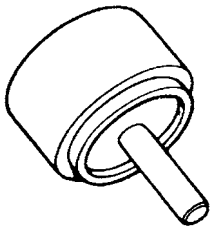 09923-78210 Bearing installer	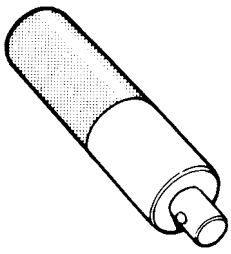 09924-74510 Bearing installer handle	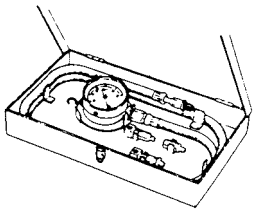 09925-37811-001 Oil pressure gauge	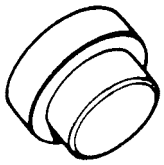 09925-88210 Bearing puller attachment
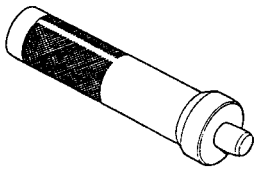 09925-98210 Bearing installer	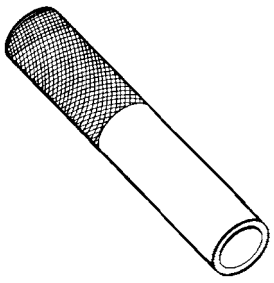 09925-98221 Bearing installer	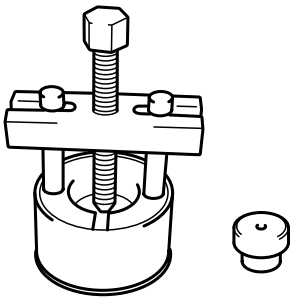 09926-37610 Bearing remover See NOTE 1.	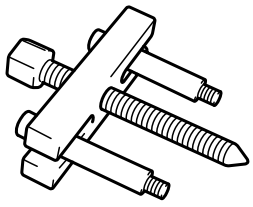 09926-37610-001 Bearing puller See NOTE 2.

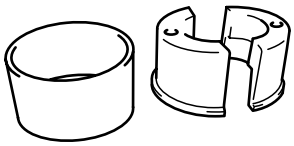 09926-37610-002 Bearing puller attachment See NOTE 2.	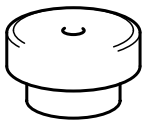 09926-37610-003 Bearing remover attachment See NOTE 2.	 09926-58010 Bearing remover attachment	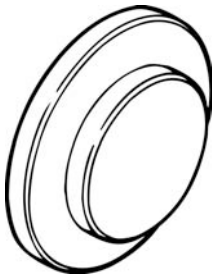 09926-96030 Clutch spring compressor
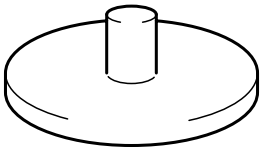 09926-96050 Brake piston compressor	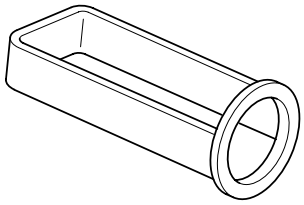 09926-97610 Spring compressor	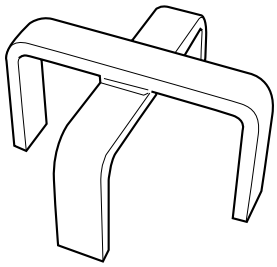 09926-97620 Spring compressor	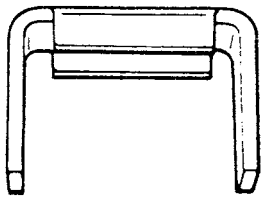 09926-98310 Clutch spring compressor
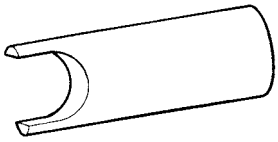 09928-06050 Differential preload adapter	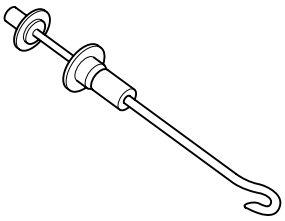 09942-15511 Sliding hammer	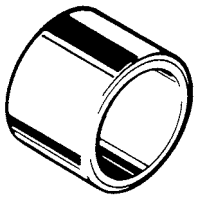 09944-78210 Bearing installer support	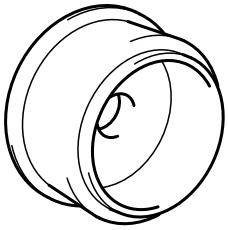 09944-88220 Oil seal installer
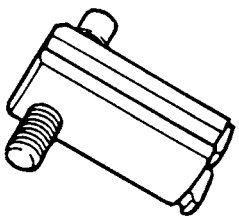 09944-96011 Bearing outer race remover	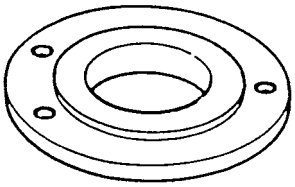 09946-06710 Bearing retainer dummy	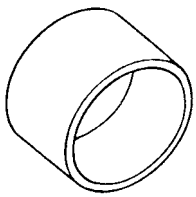 09951-18210 Oil seal installer	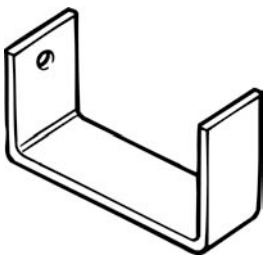 09952-06020 Dial gauge plate No.2

NOTE:

- **"1": This tool consists of Bearing Puller with 09926-37610-001, Bearing Puller Attachment with 09926-37610-002 and Bearing Remover Attachment with 09926-37610-003.**
- **"2": This tool is constituent of Bearing Remover with 09926-37610.**

Required Service Material

Material	Recommended SUZUKI product (Part Number)	Use
Automatic transmission fluid	An equivalent of DEXRON®-III	• Automatic transaxle • Parts lubrication when installing • O-rings
Sealant	SUZUKI BOND No. 1216B (99000-31230)	• Mating surface of torque converter housing • Mating surface of rear cover assembly • Torque converter housing bolts • Drive plate bolts
Lithium grease	SUZUKI SUPER GREASE C (99000-25030)	• Oil seal lips • Planetary carrier thrust washer
	SUZUKI SUPER GREASE A (99000-25010)	• Cable ends • Converter center cup

SECTION 8C1

INSTRUMENTATION/DRIVER INFORMATION (Z13DT ENGINE MODEL)

WARNING:

For vehicles equipped with Supplemental Restraint (Air Bag) System:

- **Service on and around the air bag system components or wiring must be performed only by an authorized SUZUKI dealer. Refer to "System Components and Wiring Location View and Connections" under "General Description" in Section 10B in order to confirm whether you are performing service on or near the air bag system components or wiring. Please observe all WARNINGS and "Service Precautions" under "On-Vehicle Service" in Section 10B before performing service on or around the air bag system components or wiring. Failure to follow WARNINGS could result in unintentional activation of the system or could render the system inoperative. Either of these two conditions may result in severe injury.**
- **Technical service work must be started at least 90 seconds after the ignition switch is turned to the "LOCK" position and the negative cable is disconnected from the battery. Otherwise, the system may be activated by reserve energy in the Sensing and Diagnostic Module (SDM).**

NOTE:

For the items with asterisk (*) in the "CONTENTS" below, refer to Section 8C of the Service Manual mentioned in "Foreword" of this manual.

8C1

CONTENTS

Diagnosis 8C1-2
- Low Engine Oil Level Warning Light Symptom Diagnosis (If Equipped) 8C1-2
- Speedometer and VSS Symptom Diagnosis ..... *
- Fuel Meter and Fuel Gauge Unit Symptom Diagnosis ..... *
- Engine Coolant Temperature (ECT) Gauge and ECT Sensor Symptom Diagnosis ..... *
- Engine Oil Pressure Warning Light Symptom Diagnosis ..... *
- Brake System Warning Light (Parking Brake Indicator, Brake Fluid Warning and EBD System Warning Light) ..... *
- Ignition Key Remainder and Light Remainder Warning Buzzer Symptom Diagnosis ..... *

On-Vehicle Service 8C1-3
- Cautions in Body Electrical System Servicing ..... *
- Ignition (Main) Switch ON-Vehicle Inspection ..... *
- Ignition (Main) Switch Removal and Installation ..... *
- Combination Meter Circuit 8C1-3
- Combination Meter Removal and Installation ..... *
- Fuel Gauge Inspection ..... *
- Fuel Level Sensor (Gauge Unit) Removal and Installation ..... *
- Fuel Level Sensor (Gauge Unit) Inspection ..... *
- VSS Removal and Installation ..... *
- VSS Inspection ..... *
- Engine Coolant Temperature (ECT) Gauge Inspection ..... *
  - Operation check ..... *
- ECT sensor Removal and Installation ..... *
- ECT Sensor Inspection ..... *
- Ignition Key Remainder and Light Remainder Warning Buzzer Inspection ..... *
- Engine Oil Pressure Switch Inspection 8C1-5
- Low Fuel Warning System 8C1-6
- Engine Oil Level Switch Inspection (If Equipped) 8C1-6
- Brake Fluid Level Switch Inspection ..... *
- Parking Brake Switch Inspection ..... *

Diagnosis

Low Engine Oil Level Warning Light Symptom Diagnosis (If Equipped)

NOTE:

There are three types of vehicle below. Refer to corresponding table for symptom diagnosis.

- **Vehicle with wire harness for low engine oil level warning light between "G22-20" and "G83-3" wire harness.**
- **Vehicle without wire harness for low engine oil level warning light between "G22-20" and "G83-3" wire harness.**
- **Vehicle whose wire harness for low engine oil level warning light is cut at "G83-3" connector side ("G83-3" wire harness of instrument panel harness "G83" connector located in the back of the glove box is cut).**

Vehicle with Wire Harness for Low Engine Oil Level Warning Light

Condition	Possible Cause	Correction
Low engine oil level warning light does not light up when low engine oil level	Fuse blown	Replace fuse to circuit for short.
	Wiring or grounding faulty	Repair circuit.
	Engine oil level switch faulty	Check engine oil level switch referring to "Engine Oil Level Switch Inspection" in Section 6E3.
	Combination meter faulty	Check combination meter circuit referring to "Combination Meter Circuit" in this section.
	ECM faulty	Check ECM referring to "C-38, Oil Level Telltale Circuit" in Section 6-3.
Low engine oil level warning light stays ON	Low engine oil	Refill engine oil referring to "Engine Oil and Oil Filter Replacement" in Section 0B.
	Wiring or grounding faulty	Repair circuit.
	Engine oil level switch faulty	Check engine oil level switch referring to "Engine Oil Level Switch Inspection" in Section 6E3.
	Combination meter faulty	Check combination meter circuit referring to "Combination Meter Circuit" in this section.
	ECM faulty	Check ECM referring to "C-38, Oil Level Telltale Circuit" in Section 6-3.

Vehicle without Wire Harness for Low Engine Oil Level Warning Light and Vehicle whose Wire Harness for Low Engine Oil Level Warning Light is Cut.

Condition	Possible Cause	Correction
Low engine oil level warning light stays ON	Wiring or grounding faulty	Repair wiring harness.
	Combination meter faulty	Replace combination meter.

On-Vehicle Service

Combination Meter Circuit

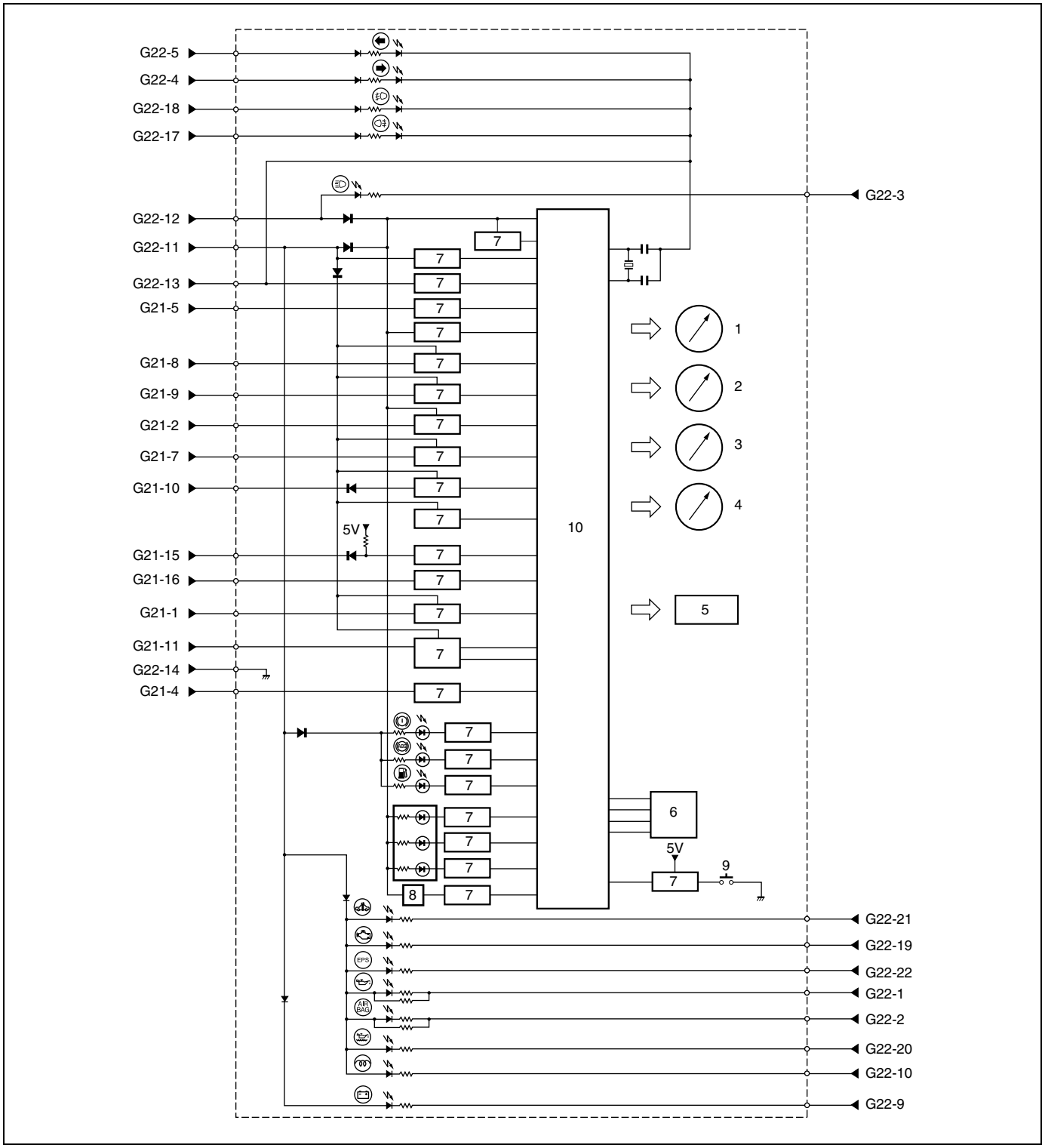

1. Speedometer	4. Engine coolant temperature gauge	7. Interface	10. CPU
2. Tachometer	5. ODO-TRIP	8. Buzzer	
3. Fuel gauge	6. EEPROM	9. Trip switch	

Terminal G21	Wire Color	Circuit
G21-1	GRY	To ECM (Engine coolant temperature meter signal)
G21-2	BLK/YEL	To door switch
G21-3	–	–
G21-4	ORN	To lighting switch (illumination control signal)
G21-5	WHT/BLK	To “ACC” fuse (key remainder signal)
G21-6	–	–
G21-7	PNK/BLU	To ABS control module (EBD warning indicator control signal)
G21-8	RED/BLU	To ABS control module (ABS indicator control signal)
G21-9	RED/BLK	To brake fluid level switch
G21-10	YEL/GRN	To parking brake switch
G21-11	YEL/RED	To fuel level gauge
G21-12	–	–
G21-13	–	–
G21-14	RED/YEL	To lighting switch
G21-15	PPL	To ECM (Speedometer signal)
G21-16	BRN	To ECM (Tachometer signal)
G21-17	–	–
G21-18	–	–
G21-19	–	–
G21-20	–	–
G21-21	–	–
G21-22	–	–

Terminal G22	Wire Color	Circuit
G22-1	BLU	To oil pressure switch
G22-2	YEL/GRN	To SDM (AIR BAG indicator control signal)
G22-3	RED	To combination switch (High beam indicator control signal)
G22-4	BLU/YEL	To combination switch (Turn R signal indicator control signal)
G22-5	GRN/RED	To combination switch (Turn L signal indicator control signal)
G22-6	–	–
G22-7	–	–
G22-8	–	–
G22-9	WHT/BLU	To generator (charge warning indicator control signal)
G22-10	GRN/YEL	To ECM (glow plug indicator control signal)
G22-11	BLU/ORN	To “METER” fuse (ignition ON signal)
G22-12	WHT/RED	To “RADIO DOME” fuse (power supply)
G22-13	BLK	To body ground
G22-14	BLK/ORN	To engine ground
G22-15	–	–
G22-16	–	–
G22-17	YEL	To lighting switch (rear fog lamp indicator control signal)
G22-18	LT GRN	To lighting switch (front fog lamp indicator control signal)
G22-19	PPL/WHT	To ECM (MIL indicator control signal)
G22-20	GRY	To ECM (low engine oil level warning indicator control signal)
G22-21	GRY/RED	To ECM (Immobilizer indicator control signal)
G22-22	PNK	To EPS control module (EPS indicator control signal)

Terminal arrangement of combination meter connector viewed from harness side

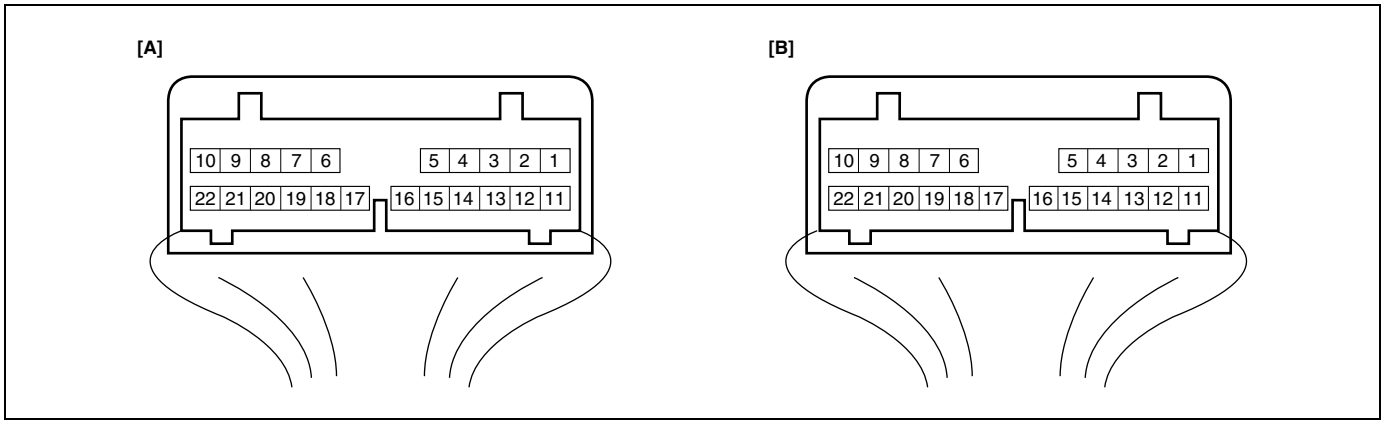

[A]: Connector “G21” (Green)
[B]: Connector “G22” (Light blue)

Engine Oil Pressure Switch Inspection

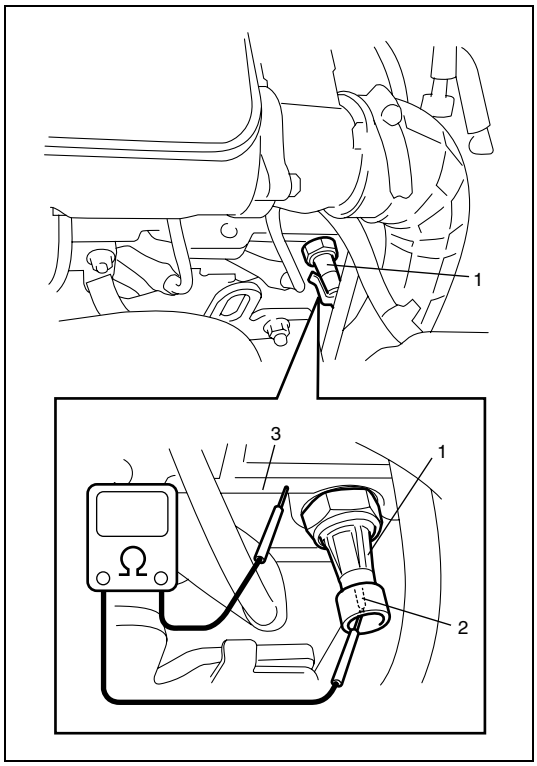

1) Disconnect engine oil pressure switch (1) lead wire.
2) Check for continuity between engine oil pressure switch terminal (2) and cylinder head (3) as shown in the figure.
   If not as specified, replace engine oil pressure switch (1).

Engine oil pressure switch specification
During engine running: No continuity
At engine stop: Continuity

Low Fuel Warning System

Operation

When fuel level gets low, this light comes on by the following operation.

Low fuel warning light operation

Low fuel warning light operation	Fuel level in fuel tank
OFF	6.0 litre (1.32 gal/Imp) or more
ON	2.9 – 6.0 litre (0.64 – 1.32 gal/Imp)

NOTE:

Lighting low fuel warning light will go off when fuel is refilled up to 10 litre (2.2 gal/Imp) fuel level.

System Inspection

1) Remove fuel pump assembly referring to "Fuel Pump Assembly Removal and Installation" in Section 6C1.
2) Check fuel sender gauge referring to "Fuel Level Sensor (Gauge Unit) Inspection" in Section 8C.

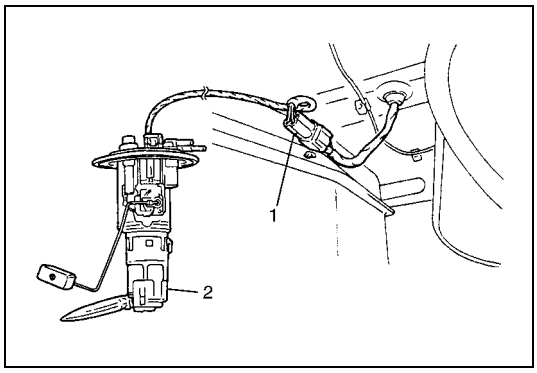

3) Connect fuel pump connector (1) to fuel pump (2).

4) Connect negative (–) cable to battery.
5) Turn ignition switch to ON position.

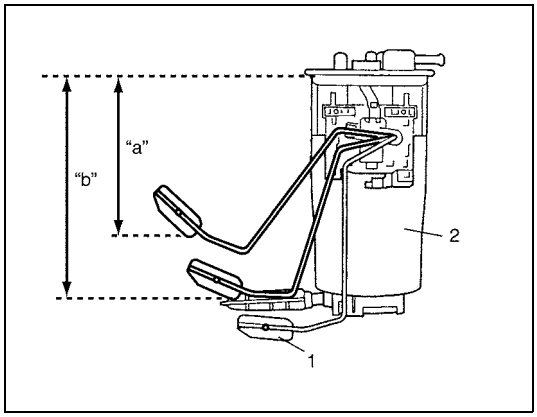

6) Check for low fuel warning lamp operation under the following each float position (1) of fuel pump (2).
   If faulty condition is found, replace combination meter.

Low fuel warning light operation

Float position		Low fuel warning light operation
"a"	Above "b" position	OFF
"b"	184 mm (7.24 in.) or more	ON

Engine Oil Level Switch Inspection (If Equipped)

Refer to "Engine Oil Level Switch Inspection" in Section 6E3.

SECTION 8G3

IMMOBILIZER CONTROL SYSTEM (Z13DT ENGINE MODEL)

WARNING:

For vehicles equipped with a Supplemental Restraint (Air Bag) System:

- **Service on and around the air bag system components or wiring must be performed only by an authorized SUZUKI dealer. Refer to "Air Bag System Components and Wiring Location View" under "General Description" in air bag section in order to confirm whether you are performing service on or near the air bag system components or wiring. Please observe all WARNINGs and "Service Precautions" under "On-Vehicle Service" in air bag system section before performing service on or around the air bag system components or wiring. Failure to follow WARNINGs could result in unintentional activation of the system or could render the system inoperative.**
  Either of these two conditions may result in severe injury.
- **Technical service work must be started at least 90 seconds after the ignition switch is turned to the "LOCK" position and the negative cable is disconnected from the battery. Otherwise, the system may be activated by reserve energy in the Sensing and Diagnostic Module (SDM).**

CONTENTS

General Description 8G3-3
Immobilizer Control System Operation Description 8G3-3
Immobilizer Control System Wiring Circuit Diagram 8G3-3
Immobilizer Control System Components Description 8G3-4
On-Board Diagnostic System Description 8G3-5
Diagnosis 8G3-7
Precautions in Diagnosing Troubles 8G3-7
Precautions after Replacing ECM or Immobilizer Control Module 8G3-7
Diagnostic Flow Table 8G3-8
Diagnostic Trouble Code (DTC) Check 8G3-9
Diagnostic Trouble Code (DTC) Clearance 8G3-9
Diagnostic Trouble Code (DTC) Table 8G3-10
Scan Tool Data 8G3-11
Inspection of Immobilizer Control Module and Its Circuits 8G3-12
DTC B1000 Immobi Cont Module Internal Fail 8G3-13
DTC B3040 W-Line Communication Fail 8G3-14
DTC B3042 W-Line CKT Malf (Short to Ground) 8G3-15
DTC B3043 W-Line CKT Malf (Short to Battery) 8G3-16
DTC B3055 No Transponder 8G3-17
DTC B3056 No Fix Code Registered 8G3-18
DTC B3057 No Password Registered 8G3-18
DTC B3059 No Request From ECM 8G3-19
DTC B3060 Incorrect Transponder Detected 8G3-20
DTC B3061 Transponder Communication Fail 8G3-21
DTC B3077 Read-Only Transponder Detected 8G3-22
DTC P1610 Secret Key and Password Not Registered 8G3-22
DTC P1611 Password Not Matched 8G3-23
DTC P1612/P1613 No Signal From Immobilizer 8G3-23
DTC P1614 Incorrect Signal from Immobilizer 8G3-24
On-vehicle Service 8G3-25
Precautions in Handling Immobilizer Control System 8G3-25
Immobilizer Control Module Removal and Installation 8G3-25
Registration Procedure of Immobilizer System Components 8G3-27
Registration flow table of immobilizer control system components 8G3-27

How to register ignition key 8G3-28
Procedure after Immobilizer Control Module replacement.....8G3-28
Procedure after ECM replacement 8G3-28
Special Tools.....8G3-29

General Description

Immobilizer Control System Operation Description

1) Each ignition key has its own FIX CODE (FC) stored in memory. When the ignition switch is turned to ON (II) position, Immobilizer Control Module reads the FC through its coil antenna from ignition key.
2) Immobilizer Control Module compares FC read in Step 1 and that registered in Immobilizer Control Module. Then, it checks if they match.
3) ECM sends variable (generated randomly) to transponder via Immobilizer Control Module, and then ECM calculates it with SECRET KEY CODE (SKC) stored in its memory according to specified algorithm.
   On the other hand, transponder also calculates received variable with SKC stored in its memory by means of same algorithm and sends back to ECM.
4) Only when ECM/transponder calculated values match, ECM keeps running engine.
   If two calculated values do not match, ECM stops operation of injectors and ignitor to stop engine after about 1.8 seconds at the first time. After the second time, ECM does not let engine start. And, so it does when FIX CODEs in Step 2 do not match.

Immobilizer Control System Wiring Circuit Diagram

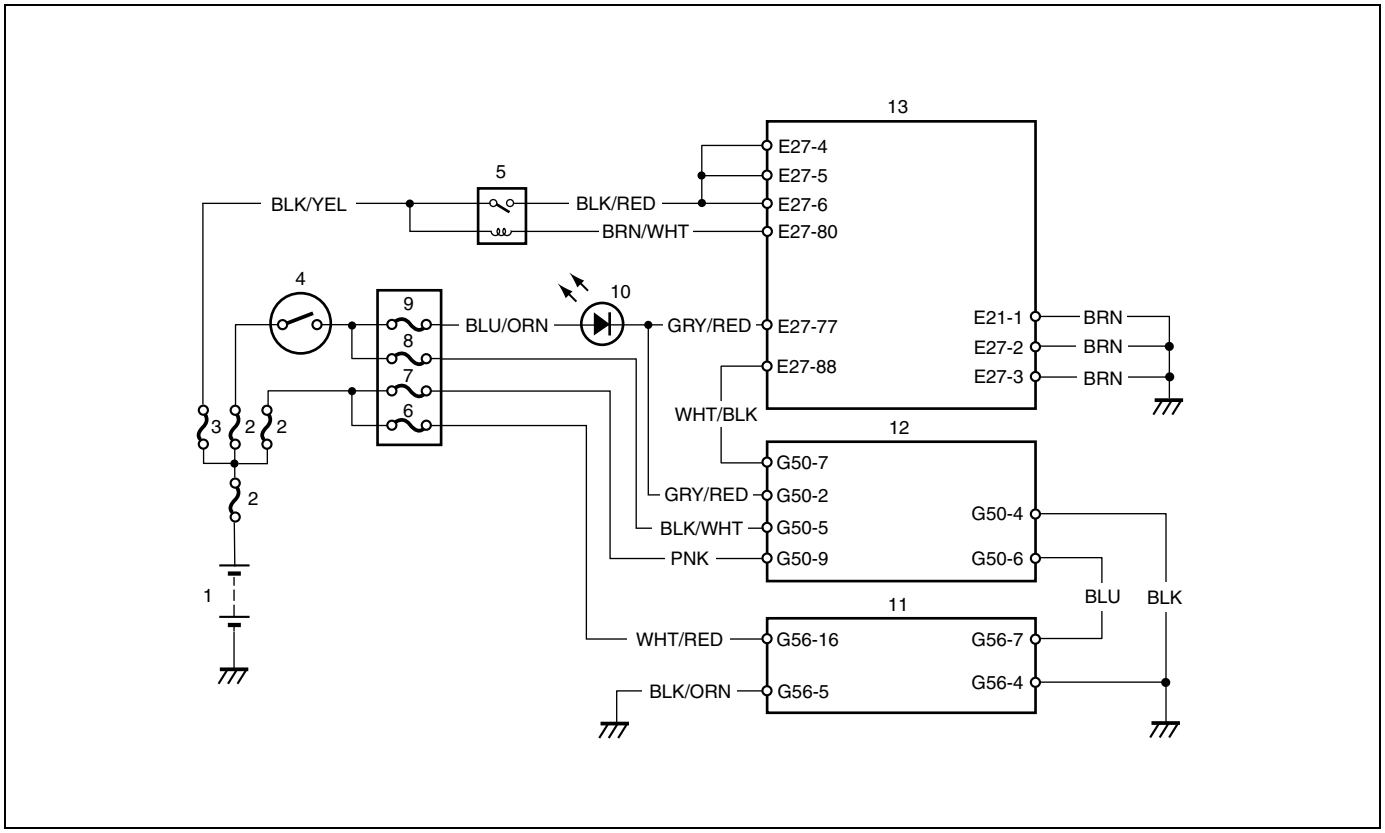

1. Battery	6. DOME RADIO fuse (15 A)	11. Data link connector (DLC)
2. Fuse	7. STOP fuse (15 A)	12. Immobilizer Control Module
3. FI fuse (20 A)	8. IG COIL fuse (15 A)	13. ECM
4. Ignition switch	9. METER fuse (10 A)	
5. Main relay	10. Service vehicle soon (SVS) lamp	

Immobilizer Control System Components Description

The immobilizer control system designed to prevent vehicle burglar and it consists of following components.

- Engine Control Module (ECM)
- Immobilizer Control Module (with coil antenna)
- Ignition key (with built-in transponder)

Ignition Key (With Built-in Transponder)

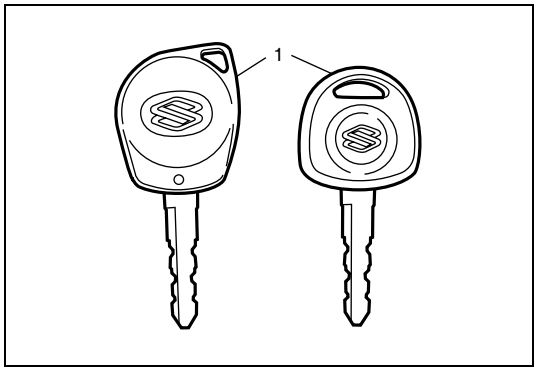

Transponder is built in an ignition key grip (1). Each transponder in the key has a FIX CODE (FC) and SECRET KEY CODE (SKC). The FC will be transmitted from the transponder via the coil antenna to Immobilizer Control Module when the ignition switch is turned to ON (II) position. SKC is used for calculation with variable sent from ECM. SKC is preset (programmed) at factory shipment.

Immobilizer Control Module

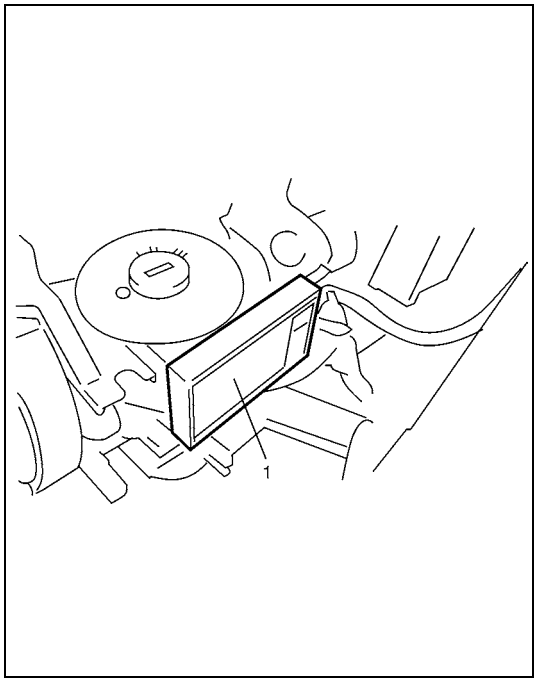

Immobilizer Control Module (1) is installed to steering column beside ignition key switch. The coil antenna is installed to Immobilizer Control Module. It energizes transponder and transmits the FIX CODE (FC) and data between transponder and Immobilizer Control Module.

As main function, Immobilizer Control Module checks if FC transmitted from transponder and that registered in Immobilizer Control Module (up to 5 different FC can be registered) match.

Immobilizer Control Module controls serial communication between scan tool and ECM.

Immobilizer Control Module has 3 different values as the follows.

- Password (PWD): for accessing to program by means of scan tool.
- SKC: for ECM and transponder to calculate with.
- FC: for checking if transponder is the registered one.

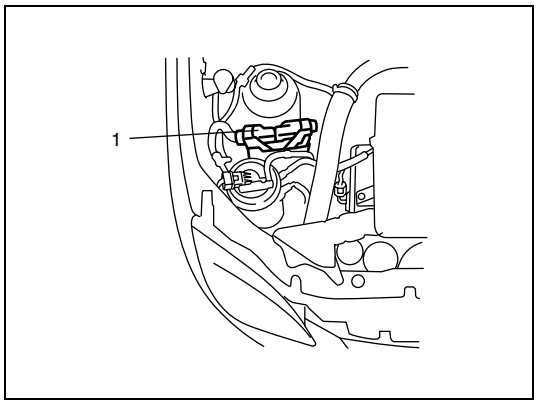

ECM

As main function other than engine control, ECM (1) sends randomized data to transponder and checks if a response from transponder and the value calculated in ECM match.
According to matching result, ECM decides to keep engine running or not.
ECM has 2 different values as follows.

- Password (PWD): for accessing to program immobilizer control system.
- SECRET KEY CODE (SKC): for calculating with this value for permission of engine start.

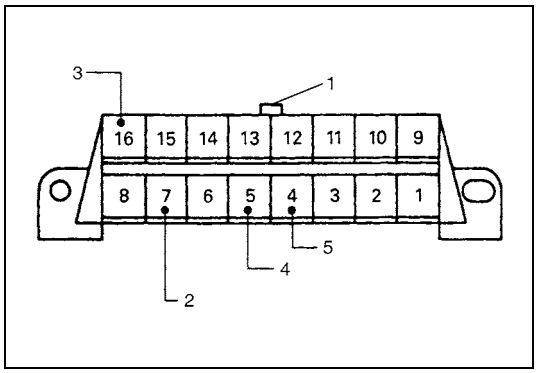

Data Link Connector (DLC)

DLC (1) is in compliance with SAE J1962 in its installation position, the shape of connector and pin assignment.
OBD-II serial data line (K line of ISO 9141) (2) is used for SUZUKI scan tool to communicate with Immobilizer Control Module, Air bag SDM, ABS control module, etc.

3.	B+
4.	ECM ground
5.	Body ground

On-Board Diagnostic System Description

ECM and Immobilizer Control Module diagnose troubles which may occur in the area including the following parts when the ignition switch is turned to ON position.

Immobilizer Control Module

- W-line (communication line between ECM and Immobilizer Control Module)
- Password (PWD)
- MIL circuit
- Transponder (ignition key)
- FIX CODE (FC)

ECM

- SECRET KEY CODE (SKC)
- PWD

When a trouble exists in the immobilizer control system (when Immobilizer Control Module or ECM detects a diagnostic trouble code (DTC)), ECM stops operation of the injector and igniter.

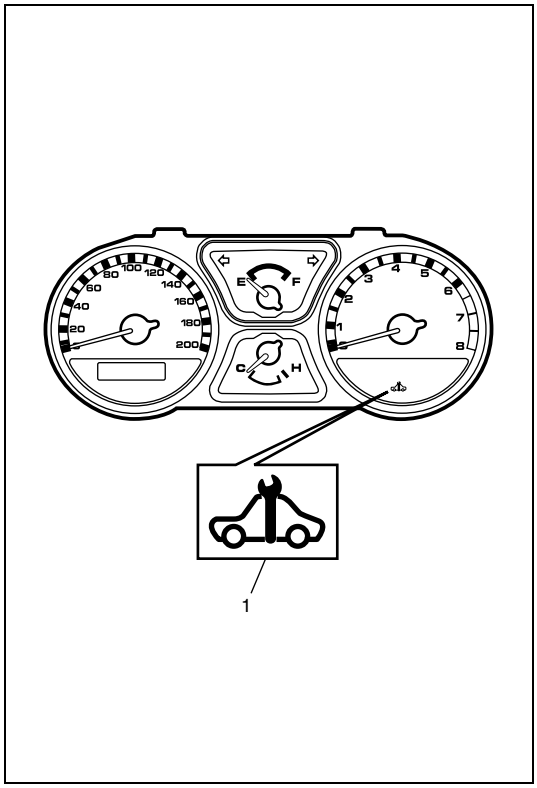

With the ignition switch at ON (but the engine at stop) regardless of the condition of the engine and emission control system, ECM indicates whether some trouble has occurred in the immobilizer control system or not by turning ON or flashing ON and OFF the SVS lamp (1).

SVS lamp is ON, and then OFF after 3 seconds:
No trouble exists in the immobilizer control system.

SVS lamp flashes ON and OFF at 0.25-sec. intervals:
ECM or Immobilizer Control Module has detected some trouble in the immobilizer control system.

NOTE:

As soon as the ignition switch is turned to ON position, ECM and Immobilizer Control Module diagnose if a trouble has occurred in the immobilizer control system in about 3 seconds at maximum.
While the diagnosis is being made, the SVS lamp stays on and diagnosis result is abnormal, it immediately starts flashing but if the result is normal, it remains on.

Diagnosis

ECM and Immobilizer Control Module have on-board diagnostic system. Investigate where the trouble is by referring to “Diagnostic Flow Table” and “Diagnostic Trouble Code (DTC) Table” in this section.

Precautions in Diagnosing Troubles

- Before confirming diagnostic trouble code, do not disconnect connector from ECM, battery cable from battery, ground wire harness or main fuse.
  Such disconnection will erase memorized information in ECM.
- Diagnostic trouble code stored in Immobilizer Control Module memory can be cleared as well as checked by using SUZUKI scan tool. Before using scan tool, read its Operator's (Instruction) Manual. Carefully to have good understanding as to what functions are available and how to use it.
- Be sure to read “Precautions for Electrical Circuit Service” in Section 0A before inspection and observe what is written there.
- There are cases where SVS lamp indicates that some trouble has occurred only temporarily and has gone. In such case, it may occur that good parts are replaced unnecessarily. To prevent such case, be sure to follow instructions given below when checking by using “Diagnostic Flow Table” in this section.
- When trouble can be identified, it is not an intermittent one: check ignition key, wires and each connector and if they are all in good condition, substitute a known-good ECM and recheck.

Precautions after Replacing ECM or Immobilizer Control Module

- When ECM is replaced, including when replaced because rechecking by using a known-good ECM is necessary during trouble diagnosis, secret key and password must be registered in ECM by performing procedure described in “Procedure after ECM replacement” in this section.
- When Immobilizer Control Module is replaced, including when replaced because rechecking by using a known-good Immobilizer Control Module is necessary during trouble diagnosis, transponder fix code, secret key and/or password must be registered in Immobilizer Control Module by performing procedure described in “Procedure after Immobilizer Control Module replacement” in this section.

Diagnostic Flow Table

Step	Action	Yes	No
1	Turn ignition switch to start engine. Does engine run?	Go to Step 5.	Go to Step 2.
2	W-line circuit check Measure terminal voltage of Immobilizer Control Module connector G50-7. Is it 10 - 14 V with ignition switch at ON position,0 - 1 V with ignition switch at OFF position?	W-line circuit is in good condition. Go to step3.	W-line circuit open or short. Check and repair. Then, go to Step 3.
3	Check for DTC referring to “Diagnostic Trouble Code (DTC) Check” in Section 6-3. Is there any DTC(s)?	Go to Step 4.	Go to Step 5.
4	Check, repair and/or perform necessary registration procedure according to flow table corresponding to DTC(s). Is there other DTC(s)?	Repeat Step 4 until no DTC is indicated.	Go to Step 5.
5	Check for DTC referring to “Diagnostic Trouble Code (DTC) Check” in this section. Is there any DTC(s)?	Go to Step 6.	Immobilizer control system is in good condition. If engine does not run, electronic fuel injection system is failed. Proceed to “A, Diagnostic System Check” in Section 6-3.
6	Check and repair according to flow table corresponding to DTC(s). Is there other DTC(s)?	Repeat Step 6 until no DTC is indicated.	Immobilizer control system is in good condition. If engine does not run, electronic fuel injection system is failed. Proceed to “A, Diagnostic System Check” in Section 6-3.

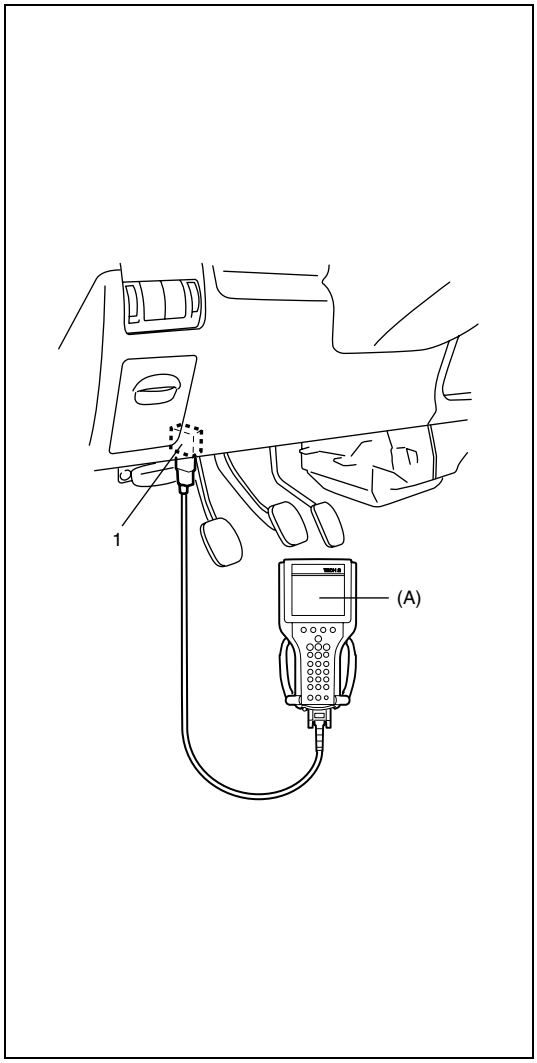

Diagnostic Trouble Code (DTC) Check

Immobilizer Control Module

1) Prepare SUZUKI scan tool.
2) With ignition switch OFF position (•), connect SUZUKI scan tool to data link connector (DLC) (1) located under instrument panel at driver's seat side.

Special tool
(A): SUZUKI scan tool

3) Turn ignition switch to ON position (II).
   Read DTC according to instructions displayed on SUZUKI scan tool referring to scan tool operator's manual for further details.
   If communication between scan tool and Immobilizer Control Module can not be established, check if SUZUKI scan tool is communicable by connecting it to immobilizer control system of another vehicle. If communication is possible in this case, SUZUKI scan tool is in good condition. Then, check data link connector and serial data line (circuit) in the vehicle with which communication can not be established.

NOTE:

DTC No. B3040, B3042 and B3043 can not be confirmed by scan tool unless W-line circuit is in good condition.

4) After completing the check, turn ignition switch to OFF position and disconnect SUZUKI scan tool from DLC.

ECM

Refer to “Diagnostic Trouble Code (DTC) Check” in Section 6-3.

Diagnostic Trouble Code (DTC) Clearance

Immobilizer Control Module

1) Connect SUZUKI scan tool to data link connector (DLC) located under instrument panel at driver’s seat side.
2) Turn ignition switch to ON position (II).
3) Erase DTC according to instructions displayed on SUZUKI scan tool referring to scan tool operator's manual for further details.
4) After completing the clearance, turn ignition switch to OFF position and disconnect SUZUKI scan tool from DLC.

ECM

Refer to “Diagnostic Trouble Code (DTC) Clearance” in Section 6-3.

Diagnostic Trouble Code (DTC) Table

Immobilizer Control Module

DTC No.	Detected Item	Detecting Condition
B1000	Immobilizer Control Module internal failure	Immobilizer Control Module failure
B3040	W-line communication failure	Communication not finished correctly
B3042	W-line circuit shorted to ground	W-line circuit voltage low
B3043	W-line circuit shorted to battery	W-line circuit voltage high
B3055	No transponder	Ignition key without transponder is used.
B3056	No FIX CODE (FC) registered	FC is not registered in Immobilizer Control Module.
B3057	No password (PWD) registered	PWD is not registered in Immobilizer Control Module.
B3059	No request from ECM	ECM/Immobilizer Control Module line (SVS lamp) is open or shorted.
B3060	Incorrect transponder detected	Unregistered transponder is detected.
B3061	Transponder communication fail	Incorrect signal or no response from transponder
B3077	Read-only transponder detected	Transponder not for this system is detected.

ECM

DTC No. Display on Scan Tool	Detected Item	Detecting Condition
P1610	SECRET KEY CODE (SKC) and password (PWD) not registered	SKC and PWD are not registered in ECM.
P1611	PWD not matched	Stored PWD is incorrect.
P1612	No signal from Immobilizer Control Module	Invalid signal from Immobilizer Control Module
P1613	No signal from Immobilizer Control Module	Invalid signal from Immobilizer Control Module
P1614	Incorrect signal from Immobilizer Control Module	Received response from transponder is incorrect.

NOTE:

- **DTC B3040, B3042 and B3043 not be confirmed by scan tool unless W-line circuit is in good condition.**
- **DTC B3059 is detected when ignition switch is turned to ON (I) position within 5 seconds after ignition switch turned to (I) or (•) position from (II) position.**

Scan Tool Data

As the data value given below are standard values estimated on the basis of values obtained from the normally operating vehicles by using SUZUKI scan tool, use them as reference values. Even when the vehicle is in good condition, there may be cases where the checked value does not fall within normal conditions and reference values. Therefore, judgement as abnormal should not be made by checking with there data alone.
Also, conditions in the table below that can be checked by SUZUKI scan tool are those detected by Immobilizer Control Module and output from Immobilizer Control Module as commands.

Scan Tool Data	Vehicle Condition	Normal Condition/ Reference Values
IGNITION SW	Ignition switch turned to ON position	ON
TRANSPONDER	Ignition switch turned to ON position	DETECTED
TRANS SKC	Ignition switch turned to ON position	REGISTERED
FIX CODE	Ignition switch turned to ON position	REGISTERED
NUMBER OF FC	(Vehicle is in normal condition)	1-5 pcs
PASSWORD	(Vehicle is in normal condition)	PROGRAMMED
WAIT LOOP	(Vehicle is in normal condition)	INACTIVE
WAIT TIME	(Vehicle is in normal condition)	0 SEC

Scan Tool Data Definitions

IGNITION SW
Ignition key switch position
ON: Ignition switch at ON position
OFF: Ignition switch at OFF position

TRANSPONDER
DETECTED: Transponder in ignition key is detected by Immobilizer Control Module.
NOT DETECTED: Transponder in ignition key is not detected.

TRANS SKC
REGISTERED: SECRET KEY CODE (SKC) is registered in ignition key with built-in transponder.
NOT REGISTERED: SKC is not registered in ignition key with built-in transponder yet.

FIX CODE
REGISTERED: FIX CODE (FC) of ignition key, which is inserted in key cylinder, is registered in Immobilizer Control Module.
NOT REGISTERED: FC of ignition key, which is inserted in key cylinder, is not registered in Immobilizer Control Module.

NUMBER OF FC (PCS)
The number of registered ignition key.

PASSWORD
REGISTERED: Password (PWD) is registered in Immobilizer Control Module.
NOT REGISTERED: PWD is not registered. It is necessary to register PWD to set Immobilizer Control Module in normal operation status.

WAIT-LOOP

INACTIVE: Security system is inactive. It is ready for password (PWD) input by using SUZUKI scan tool.
ACTIVE: Incorrect PWD was inputted and system is in wait-loop status. Inputting PWD is inhibited during the period of wait time.

WAIT TIME (SEC, MIN)

When an incorrect password (PWD) is inputted, the security system is activated. And, the immobilizer control system is in the wait-loop status for the period of wait time indicated on the SUZUKI scan tool. As an incorrect PWD is inputted repeatedly, the wait time becomes longer.

Inspection of Immobilizer Control Module and Its Circuits

Voltage Inspection

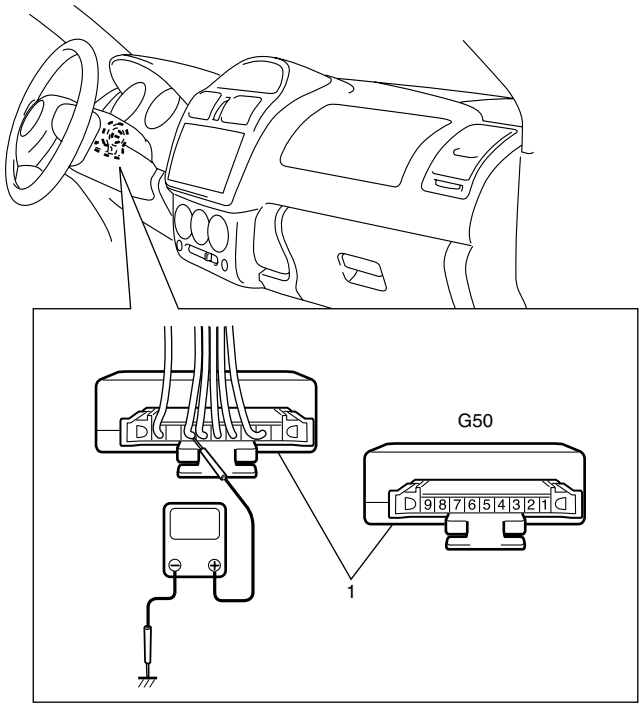

Immobilizer Control Module (1) can be checked at wiring connectors by measuring voltage.

CAUTION:

Immobilizer Control Module can not be checked by itself. It is strictly prohibited to connect voltmeter or ohmmeter to Immobilizer Control Module with coupler disconnected from it.

NOTE:

As the battery voltage affects each terminal voltage, confirm that it is 11 V or more when ignition switch is turned to ON position.

Con-nector	Terminal		Circuit	Normal Voltage	Condition
G50	1	–	Not used	–	–
	2	GRY/RED	SVS lamp	0 – 1 V	SVS lamp lights on.
	3	–	Not used	–	–
	4	BLK	Ground	0 – 1 V	Anytime
	5	BLK/WHT	Ignition switch signal	10 – 14 V	Ignition switch at ON position
				0 – 1 V	Ignition switch at OFF position
	6	BLU	Data link connector (Serial data line)	10 – 14 V	SUZUKI scan tool connected
				0 – 1 V	SUZUKI scan tool disconnected
	7	WHT/BLK	W-line	10 – 14 V	SUZUKI scan tool connected or ignition switch at ON position
				0 – 1 V	SUZUKI scan tool disconnected and ignition switch at OFF position
	8	–	Not used	–	–
	9	PNK	Power supply	10 – 14 V	Anytime

DTC B1000 Immobi Cont Module Internal Fail

DTC Detecting Condition and Trouble Area

DTC Detecting Condition	Trouble Area
Internal fault of Immobilizer Control Module	Immobilizer Control Module

Troubleshooting

Step	Action	Yes	No
1	1) Ignition switch at OFF position. 2) Disconnect connector from Immobilizer Control Module. 3) Check for proper connection to Immobilizer Control Module at all terminals. Are they in good condition?	Substitute a known-good Immobilizer Control Module according to “Immobilizer Control Module Removal and Installation” in this section and recheck.	Repair or replace.

DTC B3040 W-Line Communication Fail

Wiring Circuit

Refer to “Immobilizer Control System Wiring Circuit Diagram” in this section.

DTC Detecting Condition and Trouble Area

DTC Detecting Condition	Trouble Area
No response from ECM while Immobilizer Control Module requests signal	• W-line circuit • ECM power circuit

Troubleshooting

Step	Action	Yes	No
1	1) Ignition switch at OFF position. 2) Disconnect connector from ECM. 3) Check for proper connection to ECM at E27-88 terminal. Is it in good condition?	Go to Step 2.	Repair or replace.
2	1) Ignition switch at OFF position. 2) Disconnect connector from Immobilizer Control Module. 3) Check for proper connection to Immobilizer Control Module at G50-7 terminal. Is it in good condition?	Go to Step 3.	Repair or replace.
3	With connectors connected, measure voltage between terminal G50-7 and ground with ignition switch at ON position. Is it 10 - 14 V?	Go to Step 4.	W-line (WHT/BLK) circuit open.
4	With ignition switch at ON position, measure voltage between E27-4, E27-5, or E27-6 and ground. Are they 10 - 14 V?	Substitute a known-good ECM according to “Procedure for ECM replacement” in this section and recheck.	ECM power supply (BLK/RED) circuit open.

DTC B3042 W-Line CKT Malf (Short to Ground)

Wiring Circuit

Refer to “Immobilizer Control System Wiring Circuit Diagram” in this section.

DTC Detecting Condition and Trouble Area

DTC Detecting Condition	Trouble Area
W-line circuit voltage is low.	W-line circuit

Troubleshooting

Step	Action	Yes	No
1	1) Ignition switch at OFF position. 2) Disconnect connector from ECM. 3) Check for proper connection to ECM at E27-88 terminal. Is it in good condition?	Go to Step 2.	Repair or replace.
2	1) Connect connector to ECM. 2) Measure voltage between G50-7 terminal of Immobilizer Control Module and body ground with ignition switch at ON position referring to the figure below. Is it 10 – 14 V?	Substitute a known-good ECM according to “Procedure for ECM replacement” in this section and recheck.	W-line (WHT/BLK) is shorted to ground. Repair and recheck.

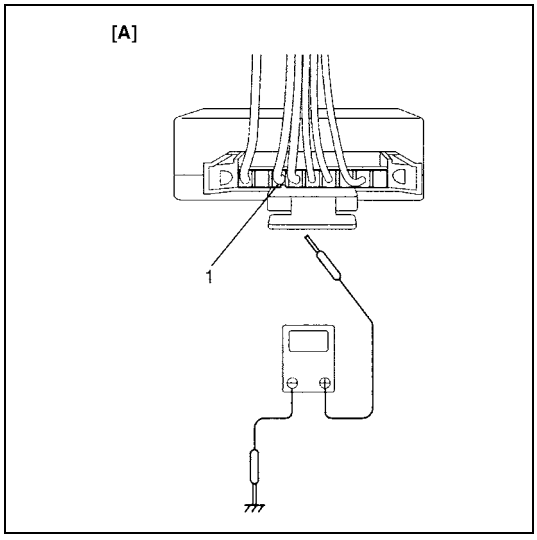

[A]: Fig. for Step 2
1. G50-7

DTC B3043 W-Line CKT Malf (Short to Battery)

Wiring Circuit

Refer to “Immobilizer Control System Wiring Circuit Diagram” in this section.

DTC Detecting Condition and Trouble Area

DTC Detecting Condition	Trouble Area
W-line circuit voltage is high.	W-line circuit

Troubleshooting

Step	Action	Yes	No
1	1) Ignition switch at OFF position. 2) Disconnect connector from ECM. 3) Check for proper connection to ECM at E27-88 terminal. Is it in good condition?	Go to Step 2.	Repair or replace.
2	1) Connect connector to ECM. 2) Measure voltage between G50-7 terminal of Immobilizer Control Module and body ground with ignition switch at OFF position and scan tool disconnected referring to the figure below. Is it 0 – 1 V?	Substitute a known-good ECM according to “Procedure for ECM replacement” in this section and recheck.	W-line (WHT/BLK) is shorted to power supply circuit. Repair and recheck.

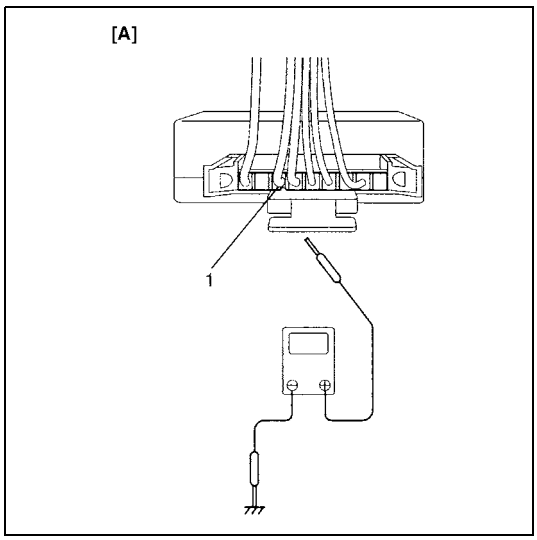

[A]: Fig. for Step 2
1. G50-7

DTC B3055 No Transponder

DTC Detecting Condition and Trouble Area

DTC Detecting Condition	Trouble Area
• No FIX CODE (FC) is transmitted from transponder. • FC transmission error.	Ignition key

Troubleshooting

Step	Action	Yes	No
1	1) Ignition switch at OFF position and leave it for 5 seconds or more. 2) Pull out ignition key and reinsert it. 3) Turn ignition switch to run engine. Does engine start?	Temporal error in code reading. Immobilizer control system is in good condition.	Go to Step 2.
2	1) Check ignition key for shape by referring to the figure below. Is it the original one?	Check ignition key referring to “Precautions in Handling Immobilizer Control System” in this section and repair or replace.	Ignition key with built-in transponder unusable. Replace, register it if necessary and recheck.

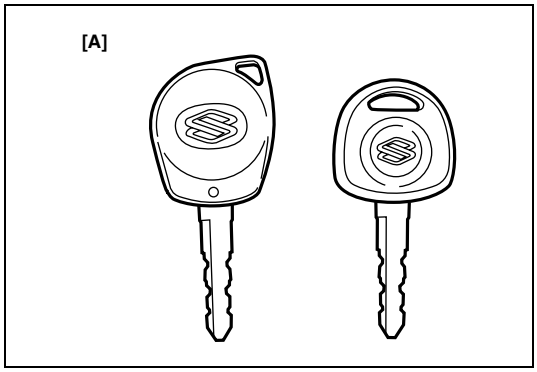

[A]: Fig. for Step 2

DTC B3056 No Fix Code Registered

DTC Detecting Condition and Trouble Area

DTC Detecting Condition	Trouble Area
No transponder FIX CODE (FC) is registered in Immobilizer Control Module.	Immobilizer Control Module

Troubleshooting

Step	Action	Yes	No
1	Check DATA LIST “NUMBER OF FC”. Is it 0?	Go to Step 2.	Substitute a known-good Immobilizer Control Module according to “Procedure after Immobilizer Control Module replacement” in this section and recheck.
2	Is DTC B3057 also output?	Proceed to DTC FLOW TABLE of DTC B3057. Then go to Step 3.	Go to Step 3.
3	Register ignition key(s) with built-in transponder according to “How to register ignition key”. Check SUZUKI scan tool DATA LIST “NUMBER OF FC”. Is it 1 or more?	Transponder FC(s) is registered.	Transponder registration procedure is not completed correctly. Register ignition key again.

DTC B3057 No Password Registered

DTC Detecting Condition and Trouble Area

DTC Detecting Condition	Trouble Area
Password (PWD) is not registered in Immobilizer Control Module.	Immobilizer Control Module

Troubleshooting

Step	Action	Yes	No
1	1) Register PWD by using SUZUKI scan tool. Refer to “Procedure after ECM replacement” in this section. 2) Confirm that PWD is registered correctly, referring to SUZUKI scan tool DATA LIST. Is PASSWORD REGISTERED message output?	PWD registration is completed.	Register PWD again and recheck.

DTC B3059 No Request From ECM

Wiring Circuit

Refer to “Immobilizer Control System Wiring Circuit Diagram” in this section.

DTC Detecting Condition and Trouble Area

DTC Detecting Condition	Trouble Area
• No request from ECM via SVS lamp circuit • Ignition switch is not reset correctly.	• SVS lamp circuit • Communication between ECM and Immobilizer Control Module

Troubleshooting

Step	Action	Yes	No
1	Turn ignition switch to (I) position or (•) position for more than 5 seconds, then turn ignition switch to ON (II) position. Recheck DTC. Is DTC B3059 current?	Go to Step 2.	Communication between ECM and Immobilizer Control Module was not finished correctly.
2	1) Check for proper connection to ECM at E27-77 terminal. Is it in good condition?	Go to Step 3.	Repair or replace.
3	1) Check for proper connection to immobilizer control module at G50-2 terminal. Is it in good condition?	Go to Step 4.	Repair or replace.
4	1) Check GRY/RED line for open or short. Is it in good condition?	Substitute a known-good ECM according to “Procedure for ECM replacement” in this section and recheck.	Repair or replace.

DTC B3060 Incorrect Transponder Detected

DTC Detecting Condition and Trouble Area

DTC Detecting Condition	Trouble Area
• FIX CODE (FC) does not match with registered one. • FC is not registered in Immobilizer Control Module.	• Ignition key with built-in transponder • Immobilizer Control Module

Troubleshooting

Step	Action	Yes	No
1	Is DTC B3056 also output?	Proceed to DTC FLOW TABLE of DTC B3056. Then, go to Step 2.	Go to Step 2.
2	Check DATA LIST “TRANSPONDER FC”. Is it registered?	Replace ignition key with built-in transponder. Then go to Step 3.	Go to Step 3.
3	Register transponder according to “How to register ignition key” in this section. Check SUZUKI scan tool DATA LIST for “FIX CODE”. Is it registered?	Transponder FIX CODE is registered.	Transponder registration procedure is not completed correctly. Register ignition key again.

DTC B3061 Transponder Communication Fail

DTC Detecting Condition and Trouble Area

DTC Detecting Condition	Trouble Area
• No response from transponder • SECRET KEY CODE (SKC) is not matched between ignition key (transponder). • FIX CODE (FC) does not match with registered one. • FC is not registered in Immobilizer Control Module.	• Ignition key with built-in transponder • SKC is not registered in transponder. • SKC is not registered in ECM. • SKC is different between ECM and transponder. • Unregistered ignition key (FC) with built-in transponder is detected. • No FC in Immobilizer Control Module

Troubleshooting

Step	Action	Yes	No
1	Is DTC B3060 also output?	Proceed to DTC FLOW TABLE of DTC B3060. Then go to Step 2.	Go to Step 2.
2	Is DTC B3055 also output?	Proceed to DTC FLOW TABLE of DTC B3055. Then go to Step 3.	Go to Step 3.
3	Check scan tool DATA LIST “TRANS SKC”. Is it REGISTERED?	Go to Step 5.	Go to Step 4.
4	1) Register SKC by performing REGI SKC/FC. 2) Check DTC. Is DTC B3061 still output?	Go to Step 5.	Register SKC and recheck.
5	1) Register SKC and PWD to ECM by referring to “Procedure after ECM replacement” in this section. 2) Check DTC. Is DTC B3061 still output?	Go to Step 6.	If there is other DTC, proceed to the DTC FLOW TABLE.
6	1) Replace ignition key with new one and register it by referring to “How to register ignition key” in this section. 2) Check DTC. Is DTC B3061 still output?	Substitute a known-good Immobilizer Control Module according to “Procedure after Immobilizer Control Module replacement” in this section and recheck.	If there is other DTC, proceed to DTC FLOW TABLE.

DTC B3077 Read-Only Transponder Detected

DTC Detecting Condition and Trouble Area

DTC Detecting Condition	Trouble Area
Transponder for other system is detected.	Ignition key with built-in transponder

Troubleshooting

Step	Action	Yes	No
1	1) Ignition switch at OFF position and leave it for 5 seconds or more. 2) Pull out ignition key and reinsert it. 3) Turn ignition switch to run engine. Does engine start?	Temporary error in reading. Immobilizer control system is in good condition.	Replace ignition key with built-in transponder. Register transponder according to “How to register ignition key” in this section.
2	Check ignition key for shape by referring to the figure below. Is it the original one?	Check ignition key referring to “Precautions in Handling Immobilizer Control System” in this section and repair or replace.	Ignition key with built-in transponder unusable. Replace, register it if necessary and recheck.

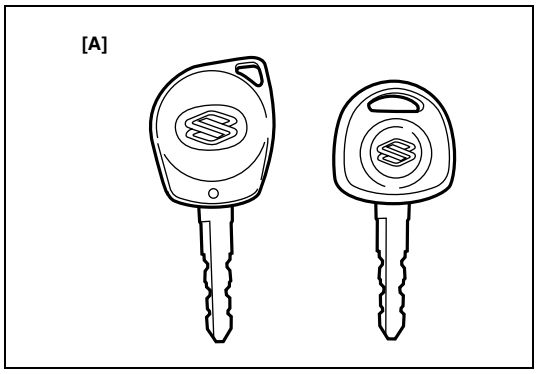

[A]: Fig. for Step 2

DTC P1610 Secret Key and Password Not Registered

DTC Detecting Condition and Trouble Area

DTC Detecting Condition	Trouble Area
SECRET KEY CODE (SKC) and password (PWD) are not registered in ECM.	ECM

Troubleshooting

Step	Action	Yes	No
1	1) Register SKC and PWD by using SUZUKI scan tool. Refer to “Procedure for ECM replacement” in this section. 2) Check DTC. Is DTC P1610 still output?	ECM is registered correctly.	Perform registration procedure again and recheck.

DTC P1611 Password Not Matched

DTC Detecting Condition and Trouble Area

DTC Detecting Condition	Trouble Area
Password (PWD) registered in ECM is not correct.	ECM

Troubleshooting

Step	Action	Yes	No
1	Register PWD and SECRET KEY CODE (SKC) by using scan tool. Turn ignition switch to OFF position and leave it for 5 seconds or more. Then turn ignition switch to ON position. Is DTC P1611 still output?	Substitute a known-good ECM according to “Procedure for ECM replacement” in this section and recheck.	ECM is in good condition.

DTC P1612/P1613 No Signal From Immobilizer

DTC Detecting Condition and Trouble Area

DTC Detecting Condition	Trouble Area
Signal from Immobilizer Control Module is not received correctly.	• W-line circuit • Immobilizer Control Module

Troubleshooting

Step	Action	Yes	No
1	Is DTC B3040, B3042 or B3043 output at Immobilizer Control Module?	W-line (WHT/BLK) fail. Proceed to each DTC FLOW TABLE according to that DTC number. Check B3042 or B3043 first and then B3040 if two codes are output at the same time.	Go to Step 2.
2	1) Ignition switch at OFF position and leave it for 5 seconds or more. 2) Pull out ignition key and reinsert it. 3) Turn ignition switch to run engine. Does engine start?	Temporary error in reading. Immobilizer control system is in good condition.	Substitute a known-good ECM according to “Procedure for ECM replacement” in this section and recheck.

DTC P1614 Incorrect Signal from Immobilizer

DTC Detecting Condition and Trouble Area

DTC Detecting Condition	Trouble Area
Signal from Immobilizer Control Module is not matched.	• Ignition key with built-in transponder internally faulty • SECRET KEY CODE (SKC) is not registered in transponder. • SKC key is not registered in ECM. • SKC is different between ECM and transponder. • Unregistered ignition key (FIX CODE (FC)) with built-in transponder is detected. • No FC in Immobilizer Control Module

Troubleshooting

Step	Action	Yes	No
1	Proceed DTC FLOW TABLE of DTC B3061. Recheck DTC. Is DTC P1614 still output?	Substitute a known-good ECM according to “Procedure for ECM replacement” in this section and recheck.	ECM and Immobilizer Control Module are programmed correctly.

On-vehicle Service

Precautions in Handling Immobilizer Control System

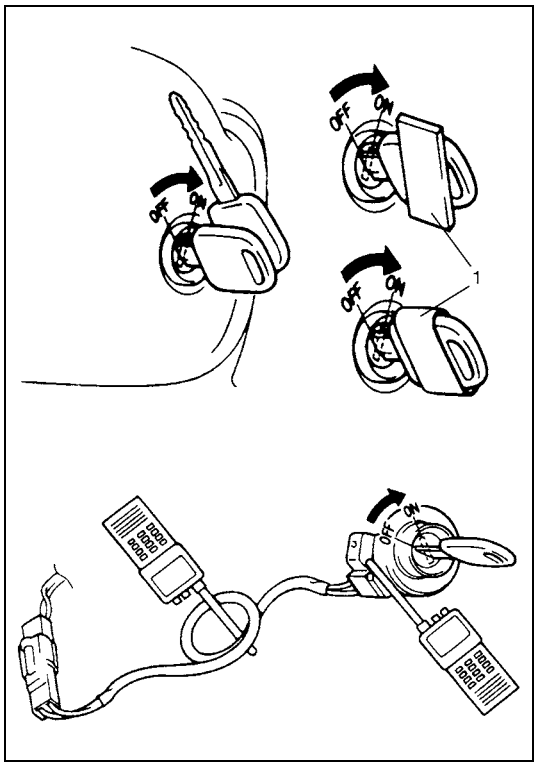

- Do not turn ignition switch to ON position (II) with ignition key with built-in transponder put together with another one or placed quite close to another one. Or, the system may detect abnormal condition and prevent engine from running.
- Do not turn ignition switch to ON position (II) by using ignition key with built-in transponder with any type of metal wound (1) around its grip (housing) or in contact with it. Or, the system may detect abnormal condition and prevent engine from starting.
- Do not leave ignition key with built-in transponder where high temperature is anticipated. High temperature will cause transponder in ignition key to be abnormal or damaged.
- Do not turn ignition switch to ON position (II) with a radio antenna placed near coil antenna or its harness to Immobilizer Control Module.
  Or the system may detect abnormal condition and prevent engine from starting.

Immobilizer Control Module Removal and Installation

Removal

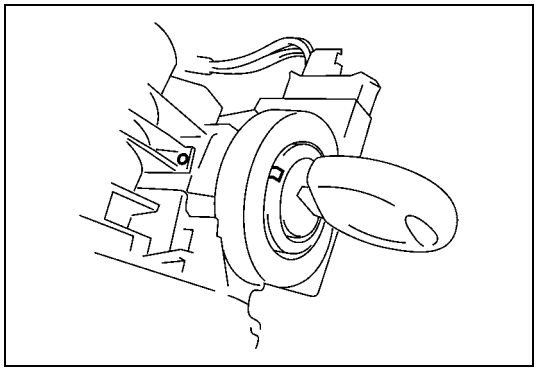

1) Remove steering column cover.
2) Remove key cylinder cap from key cylinder switch.
3) Turn ignition switch to (I) position.

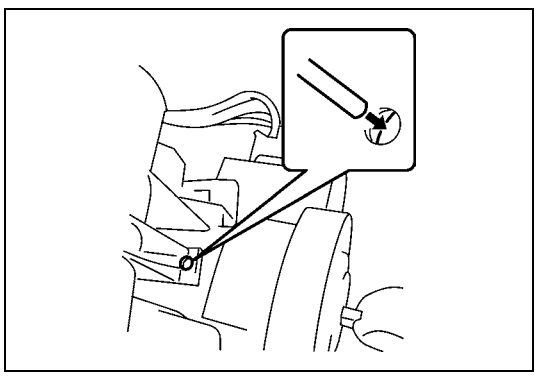

4) Push the protrusion in the hole.

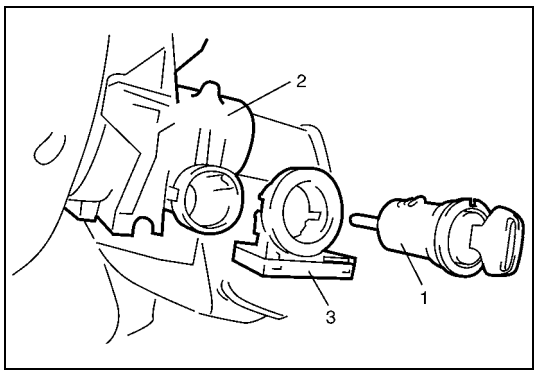

5) Pull off key cylinder (1) from column assembly (2).
6) Disconnect wire harness connector from Immobilizer Control Module.
7) Remove Immobilizer Control Module (3).

Installation

Reverse removal procedure noting the following instruction.

- Insert key cylinder to steering column referring to “Steering Column Removal and Installation” in Section 3C.

Registration Procedure of Immobilizer System Components

Registration flow table of immobilizer control system components

When replacing any component of immobilizer control system, perform registration procedure according to following flow table.

NOTE:

When replacing Immobilizer Control Module and ECM at the same time, the ignition key with built-in transponder that has been registered to the system (SECRET KEY CODE (SKC) registered to transponder) can not be used. Prepare new ignition key with built-in transponder (SKC unregistered to transponder), and perform Steps 1 to 4 as follows.

Step	Action	Yes	No
1	DTC CHECK. Check for DTC referring to referring to “Diagnostic Trouble Code (DTC) Check” in this section. Are there DTC B1000, B3040, B3042, and/or B3043?	Proceed to each diagnostic flow table corresponding to that DTC(s).	Go to Step 2.
2	Confirmation of password (PWD) registration. Is there DTC B3057?	Register PWD by referring to “Procedure after ECM replacement” in this section. Then, go to Step 3.	Go to Step 3.
3	ECM replacement. Is ECM replaced?	Proceed to “Procedure after ECM replacement” in this section. Then, go to Step 4.	Go to Step 4.
4	Immobilizer Control Module replacement. Is Immobilizer Control Module replaced?	Proceed to “Procedure after Immobilizer Control Module replacement” in this section.	Go to Step 5.
5	Ignition key with built-in transponder registration. Is ignition key registered?	Proceed to “How to register ignition key” in this section.	End.

How to register ignition key

To register ignition key with built-in transponder, perform “Register New IG Key (Fix Code)” mode by using SUZUKI scan tool. For your details, refer to “SUZUKI Tech2 Operator’s Manual”.

NOTE:

Registering SECRET KEY CODE (SKC) to ignition key with built-in transponder is available only once.

Procedure after Immobilizer Control Module replacement

When Immobilizer Control Module must be replaced including when replaced because rechecking by using a known-good Immobilizer Control Module is necessary during trouble diagnosis, register FIX CODE (FC) and SECRET KEY CODE (SKC) to Immobilizer Control Module by performing the following procedure.

Perform “IMM Cont (Register Secret Key Code)” and “Register New IG Key (Fix Code)” modes by using SUZUKI scan tool. For your details, refer to “SUZUKI Tech2 Operator’s Manual”.

Procedure after ECM replacement

When ECM is replaced, including when replaced because rechecking by using a known-good ECM is necessary during trouble diagnosis, register password (PWD) and SECRET KEY CODE (SKC) to ECM by performing following procedure.

Refer to “Procedure After ECM Replacement” under “ECM Registration” in Section 6E3.

Special Tools

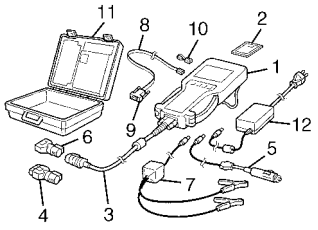

Tech 2 kit (SUZUKI scan tool)
See NOTE below.

NOTE:

This kit includes the following items.
1. Tech 2, 2. PCMCIA card, 3. DLC cable, 4. SAE 16/19 adapter, 5. Cigarette cable, 6. DLC loopback adapter, 7. Battery power cable, 8. RS232 cable, 9. RS232 adapter, 10. RS232 loopback connector, 11. Storage case, 12. Power supply

SECTION 9

BODY SERVICE

WARNING:

For vehicles equipped with Supplemental Restraint (Air Bag) System:

- **Service on and around the air bag system components or wiring must be performed only by an authorized SUZUKI dealer. Refer to "System Components and Wiring Location View and Connectors" under "General Description" in Section 10B in order to confirm whether you are performing service on or near the air bag system components or wiring. Please observe all WARNINGS and "Service Precautions" under "On-Vehicle Service" in Section 10B before performing service on or around the air bag system components or wiring. Failure to follow WARNINGS could result in unintentional activation of the system or could render the system inoperative. Either of these two conditions may result in severe injury.**
- **Technical service work must be started at least 90 seconds after the ignition switch is turned to the "LOCK" position and the negative cable is disconnected from the battery. Otherwise, the system may be activated by reserve energy in the Sensing and Diagnostic Module (SDM).**
- **When body servicing, if shock may be applied to air bag system component parts, remove those parts beforehand. (Refer to Section 10B.)**

NOTE:

- **Fasteners are important attaching parts in that they could affect the performance of vital components and systems, and/or could result in major repair expense. They must be replaced with one of the same part number of with an equivalent part if replacement becomes necessary.**
- **Do not use a replacement part of lesser quality or substitute a design. Torque values must be used as specified during reassembly to assure proper retention of these parts.**
- **For the items with asterisk (*) in the "CONTENTS" below, refer to the same section of the Service Manual mentioned in the "Foreword" of this manual.**

9

CONTENTS

Glass, Windows and Mirrors ..... *
- Front Door Window Removal and Installation ..... *
- Front Door Window Inspection ..... *
- Front Door Window Regulator Removal and Installation ..... *
- Front Door Window Regulator Inspection ..... *
- Door Mirror Removal and Installation ..... *
- Rear Door Window Removal and Installation ..... *
- Rear Door Window Inspection ..... *
- Rear Door Window Regulator Removal and Installation ..... *
- Rear Door Window Regulator Inspection ..... *
- Windshield Removal and Installation ..... *
  - Preparation ..... *
- Quarter Window Removal and Installation ..... *
- Rearend Glass Removal and Installation ..... *

Body Structure ..... *
- Front Door Removal and Installation ..... *
- Rear Door Removal and Installation ..... *
- Rearend Door Removal and Installation ..... *
- Hood Removal and Installation ..... *
- Hood Adjustment ..... *
- Hood Inspection ..... *
- Front Fender Removal and Installation ..... *
- Front Bumper and Rear Bumper Removal and Installation ..... *
- Bumper Extension and Splash Guard Removal and Installation (If Equipped) ..... *
- Rearend Door Spoiler Removal and Installation (If Equipped) ..... *
- Roof Rail Removal and Installation (If Equipped) ..... *
- Body Dimensions ..... *
  - Engine room ..... *
  - Rearend door ..... *
  - Side body ..... *

Under body ..... *
Panel Clearance ..... *
Instrumentation and Driver Information ..... *
Instrument Panel Removal and Installation ..... *
Seats 9-3
Front Seat Removal and Installation 9-3
Rear Seat Removal and Installation 9-4
Security and Locks ..... *
Front Door Lock Assembly Removal and Installation ..... *
Front Door Lock Assembly Inspection ..... *
Rear Door Lock Assembly Removal and Installation ..... *
Rear Door Lock Assembly Inspection ..... *
Rearend Door Lock Assembly Removal and Installation ..... *
Key Coding ..... *
Key Usage and Identification ..... *
Ignition switch lock cylinder removal and installation ..... *
Exterior and Interior Trim ..... *
Floor Carpet Removal and Installation ..... *
Center Console Box Removal and Installation ..... *
Head Lining Removal and Installation ..... *
Roof Molding Removal and Installation ..... *
Paint and Coatings 9-5
Anti-Corrosion Treatment ..... *
Sealant Application Areas ..... *
Under Coating Application Areas 9-5
Anti-Corrosion Compound Application Area 9-6
Plastic Parts Finishing ..... *
Required Service Material ..... *

Seats

Front Seat Removal and Installation

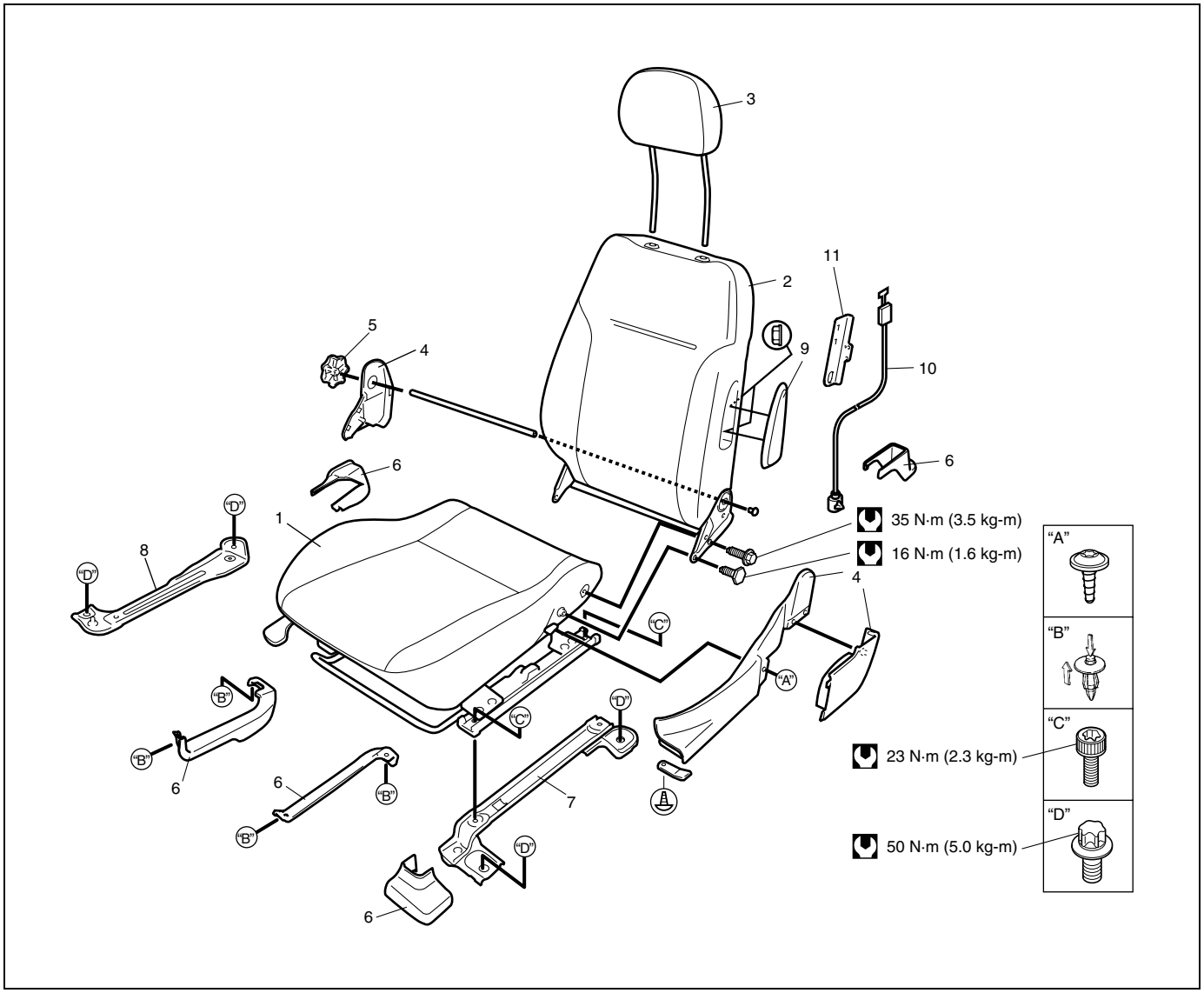

1. Seat cushion assembly	4. Cover	7. Seat adjuster outer bracket	10. Side air bag harness (if equipped)
2. Seat back	5. Knob	8. Seat adjuster inner bracket	11. Harness bracket
3. Headrest	6. Cover	9. Side air bag module (if equipped)	Tightening torque

Removal

1) Remove console box.
2) Disable air bag system referring to “Disabling Air Bag System” in Section 10B.
3) Disconnect heat seater coupler and side air bag coupler, if equipped.
4) Remove 4 mounting bolts to remove seat assembly.
5) Disassemble and repair seat as necessary.

Installation

Reverse removal procedure to install front seat.
Torque to specifications as shown in above figure.

Rear Seat Removal and Installation

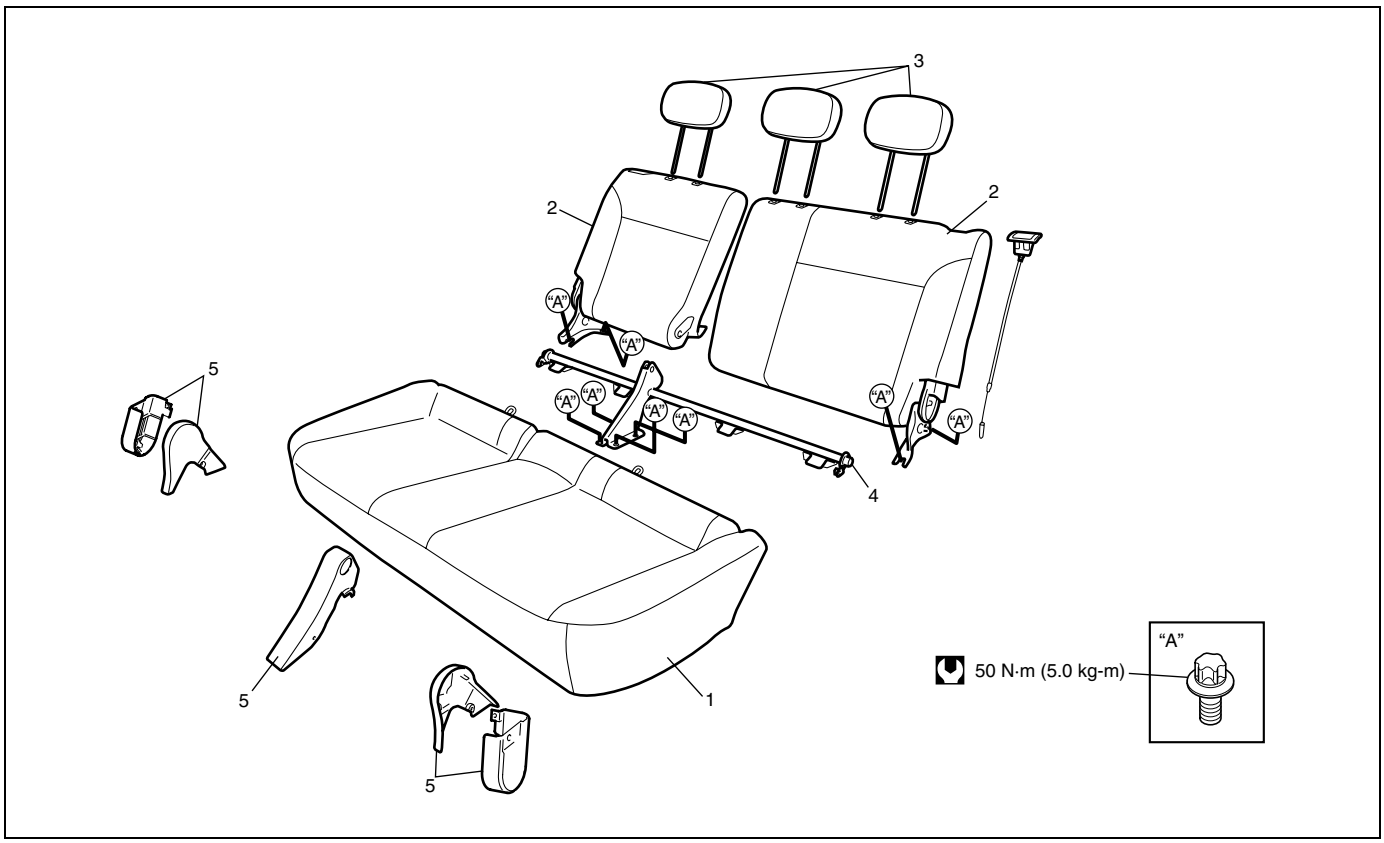

1. Seat cushion	3. Headrest	5. Cover
2. Seat back	4. Rear seat back bracket	Tightening torquer

Removal

1) Remove seat cushion.
2) Remove 8 seat back bolts to remove seat back.
3) Disassemble and repair seat as necessary.

Installation

Reverse removal procedure to install rear seat.
Torque to specifications as shown in above figure.

Paint and Coatings

Under Coating Application Areas

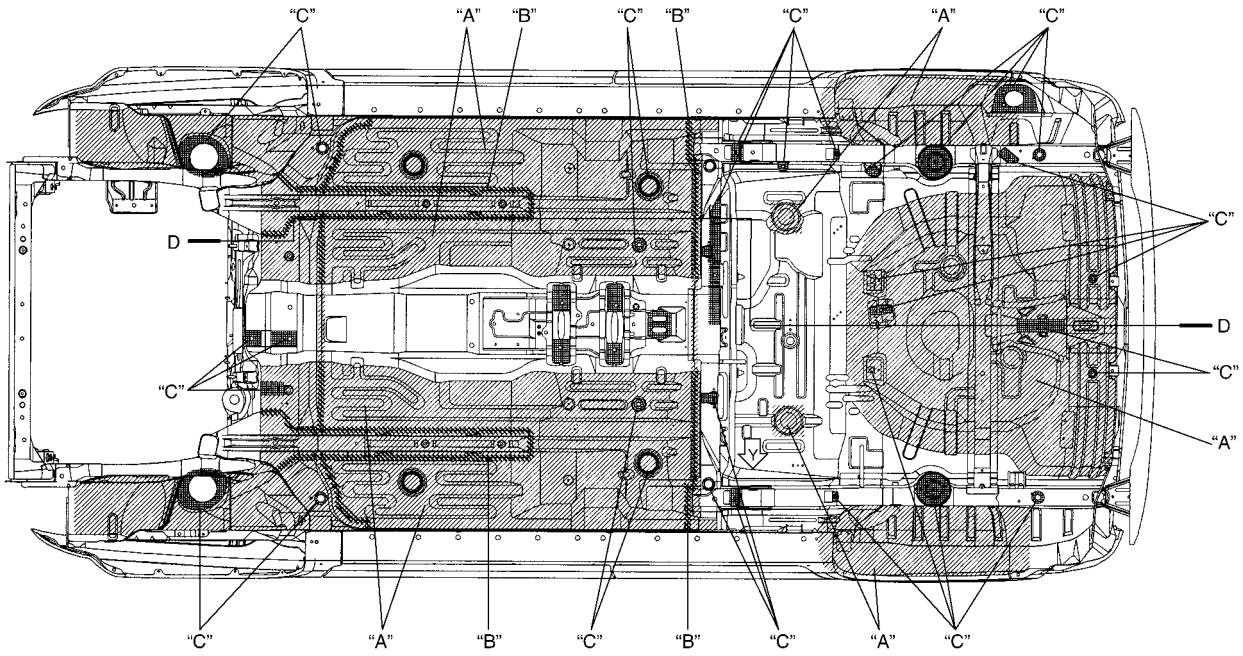

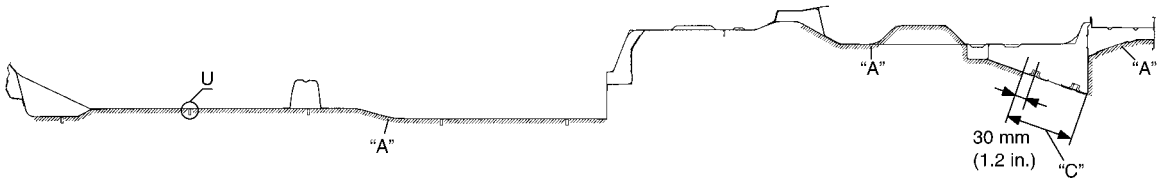

D-D

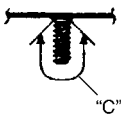

U

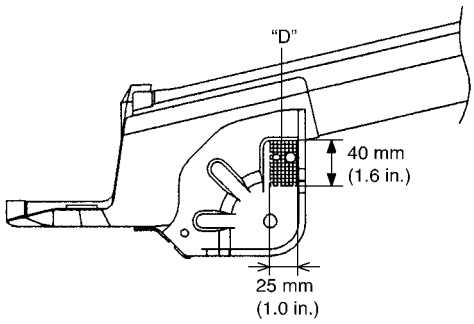

Y

"A":	Apply undercoating (PCV, 400 µm or more)
"B":	Apply undercoating (PCV, 600 µm or more)
"C":	Do not apply undercoating

Anti-Corrosion Compound Application Area

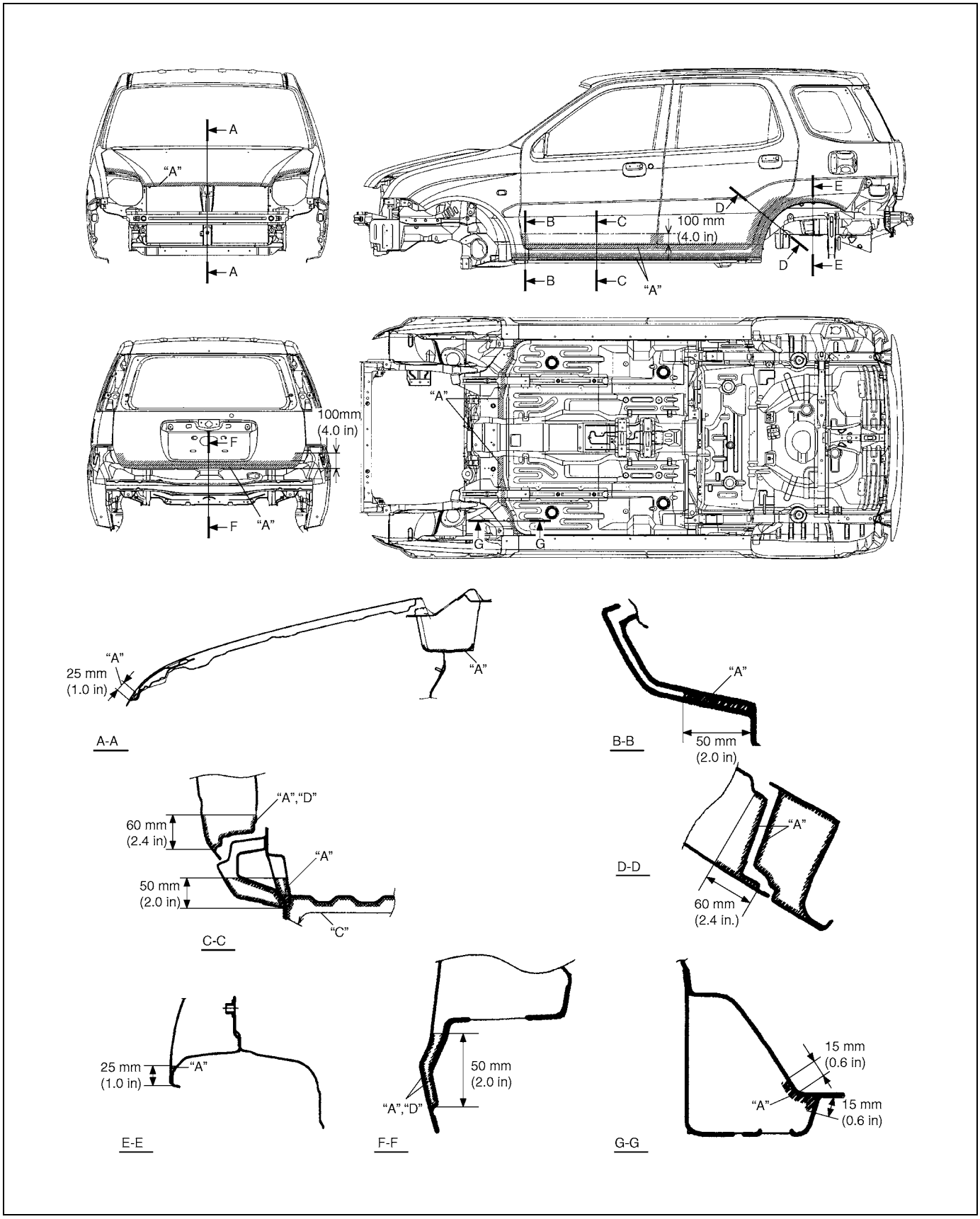

"A": Apply rust proof wax (hot wax 50 µm or more)	"C": Apply rust proof wax (high viscosity wax 50 µm or more)
"B": Apply rust proof wax (low viscosity wax 10 µm or more)	"D": Never fill up drain holes with rust proof wax

Prepared by
MAGYAR SUZUKI CORPORATION

1st Ed. Nov., 2003

Printed in Hungary

Printing: December, 2003 504

IMPORTANT

WARNING/CAUTION/NOTE

Please read this manual and follow its instructions carefully. To emphasize special information, the words **WARNING, CAUTION** and **NOTE** have special meanings. Pay special attention to the messages highlighted by these signal words.

WARNING:

Indicates a potential hazard that could result in death or injury.

CAUTION:

Indicates a potential hazard that could result in vehicle damage.

NOTE:

Indicates special information to make maintenance easier or instructions clearer.

WARNING:

This service manual is intended for authorized Suzuki dealers and qualified service technicians only. Inexperienced mechanics or mechanics without the proper tools and equipment may not be able to properly perform the services described in this manual.
Improper repair may result in injury to the mechanic and may render the vehicle unsafe for the driver and passengers.

WARNING:

For vehicles equipped with a Supplemental Restraint (Air Bag) System:

- **Service on and around the air bag system components or wiring must be performed only by an authorized SUZUKI dealer. Refer to "Air Bag System Components and Wiring Location View" under "General Description" in air bag system section in order to confirm whether you are performing service on or near the air bag system components or wiring. Please observe all WARNINGS and "Service Precautions" under "On-Vehicle Service" in air bag system section before performing service on or around the air bag system components or wiring. Failure to follow WARNINGS could result in unintentional activation of the system or could render the system inoperative. Either of these two conditions may result in severe injury.**
- **If the air bag system and another vehicle system both need repair, Suzuki recommends that the air bag system be repaired first, to help avoid unintended air bag system activation.**
- **Do not modify the steering wheel, instrument panel or any other air bag system component (on or around air bag system components or wiring). Modifications can adversely affect air bag system performance and lead to injury.**
- **If the vehicle will be exposed to temperatures over 93°C (200°F) (for example, during a paint baking process), remove the air bag system components beforehand to avoid component damage or unintended activation.**

The circle with a slash in this manual means "Do not do this" or "Do not let this happen".

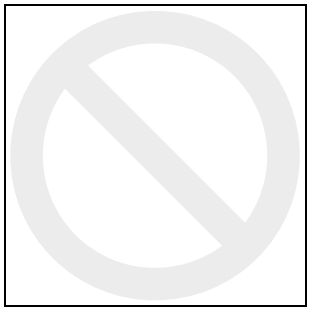

Foreword

This SUPPLEMENTARY SERVICE MANUAL is a supplement to IGNIS (RM413) SERVICE MANUAL and Wagon R+ (RB310/413) SERVICE MANUAL. It has been prepared exclusively for the following applicable model.

Applicable model: IGNIS with Z13DT diesel engine (RM413D) and Wagon R+ with Z13DT diesel engine (RB413D)

It describes only service information for the Z13DT diesel engine, M/T and clutch of the above applicable model. For any section other than the engine, the transmission and clutch, refer to the related service manual below.

When replacing parts or servicing by disassembling, it is recommended to use SUZUKI genuine parts, tools and service materials (lubricant, sealants, etc.) as specified in each description.

All information, illustrations and specifications contained in this literature are based on the latest product information available at the time of publication approval. And used as the main subject of description is the vehicle of standard specifications among others.
Therefore, note that illustrations may differ from the vehicle being actually serviced.
The right is reserved to make changes at any time without notice.

NOTE:

"SUZUKI Dealers" means Authorized SUZUKI Service Workshop (in Europe)

RELATED MANUAL:
For IGNIS (RM413D)

Manual Name	Manual No.
IGNIS (RM413) SERVICE MANUAL	99500U86G00-01E
IGNIS (RM415/RM413D) SUPPLEMENTARY SERVICE MANUAL	99501U86G10-01E
IGNIS (RM413/RM415/RM413D) WIRING DIAGRAM MANUAL	99512U86G20-669

For Wagon R+ (RB413D)

Manual Name	Manual No.
RB413 SERVICE MANUAL	99500-83E00-01E
Wagon R+ (RB413) SUPPLEMENTARY SERVICE MANUAL	99501-83E00-01E
RB310 SERVICE MANUAL	99500-83E10-01E
Wagon R+ (RB310/RB413) SUPPLEMENTARY SERVICE MANUAL	99501-83E10-01E
Wagon R+ (RB310/RB413) SUPPLEMENTARY SERVICE MANUAL	99501-83E20-01E
Wagon R+ (RB310/RB413/RB413D) SUPPLEMENTARY SERVICE MANUAL	99501-83E30-01E
Wagon R+ (RB310/RB413/RB413D) WIRING DIAGRAM MANUAL	99512-83E30-669

MAGYAR SUZUKI CORPORATION

© COPYRIGHT MAGYAR SUZUKI CORPORATION 2003

TABLE OF CONTENTS

ENGINE	
ENGINE GENERAL INFORMATION AND DIAGNOSIS (Z13DT ENGINE)	**6-3**
ENGINE MECHANICAL (Z13DT ENGINE)	**6A3**
ENGINE COOLING (Z13DT ENGINE)	**6B3**
ENGINE FUEL (Z13DT ENGINE)	**6C3**
ENGINE AND EMISSION CONTROL SYSTEM (Z13DT ENGINE)	**6E3**
CRANKING SYSTEM (Z13DT ENGINE)	**6G3**
CHARGING SYSTEM (Z13DT ENGINE)	**6H3**
EXHAUST SYSTEM (Z13DT ENGINE)	**6K3**

TRANSAXLE AND CLUTCH	
MANUAL TRANSAXLE (Z13DT ENGINE MODEL)	**7A3**
CLUTCH (Z13DT ENGINE MODEL)	**7C3**

SECTION 6-3

ENGINE GENERAL INFORMATION AND DIAGNOSIS (Z13DT ENGINE)

WARNING:

For vehicles equipped with a Supplemental Restraint (Air Bag) System:

- **Service on and around the air bag system components or wiring must be performed only by an authorized SUZUKI dealer. Refer to "Air Bag System Components and Wiring Location View" under "General Description" in air bag system section in order to confirm whether you are performing service on or near the air bag system components or wiring. Please observe all WARNINGS and "Precautions" under "On-Vehicle Service" in air bag system section before performing service on or around the air bag system components or wiring. Failure to follow WARNINGS could result in unintentional activation of the system or could render the system inoperative. Either of these two conditions may result in severe injury.**
- **Technical service work must be started at least 90 seconds after the ignition switch is turned to the "LOCK" position and the negative cable is disconnected from the battery. Otherwise, the system may be activated by reserve energy in the Sensing and Diagnostic Module (SDM).**

CONTENTS

General Information 6-3-3
Statement of Cleanliness and Care 6-3-3
General Information on Engine Service 6-3-3
Precaution on fuel system service 6-3-4
Fuel pressure relief procedure 6-3-4
Fuel leakage check procedure 6-3-4
Engine Diagnosis 6-3-5
General Description 6-3-5
Precaution in Diagnosing Trouble 6-3-6
Diagnostic Trouble Code (DTC) Check 6-3-7
Diagnostic Trouble Code (DTC) Clearance 6-3-7
A, Diagnostic System Check 6-3-8
B-01, Diagnostic Trouble Code 6-3-11
B-03, Connect Scan Tool and Establish Communication 6-3-22
B-04, Actuator Test 6-3-23
B-05, Additional Functions 6-3-27
B-06, Programming 6-3-28
B-07, ECU Control 6-3-29
B-08, No Matching Customer Complaint 6-3-30
B-09, Symptom Chart/Customer Complaints 6-3-31
B-10, Complaint: Engine Start 6-3-32
B-11, Complaint: Engine Idling 6-3-33
B-12, Complaint: Engine Behaviour Under Normal Driving Conditions 6-3-35
B-13, Complaint: Engine Performance 6-3-37
B-14, Complaint: Exhaust Gas 6-3-39
B-15, Complaint: Oil/Coolant/ Fuel-System 6-3-41
B-16, Complaint: Engine Mechanic 6-3-42
B-17, Check: Functionality of Adjacent Systems 6-3-43
B-18, Check: Intermittent Faults 6-3-44
B-19, Programming ECM 6-3-46
B-20, Immobilizer Check 6-3-47
B-21, Fuel System 6-3-48
B-22, Intake-Air System 6-3-49
B-23, Check: Intake-Air System 6-3-50
B-24, Check: Intake-Air System/ Charge-Air System 6-3-51
B-25, Check: Charge-Air System 6-3-52
B-26, Check: Distance Signal 6-3-53
B-27, Check: Pressure Sensor Signal 6-3-54
B-28, Complaint: Engine Temperature 6-3-55
B-29, Check: High Pressure Area 6-3-56
B-30, Check: Low and High Pressure Section 6-3-57
B-31, Check: Low Pressure Section 6-3-58
B-32, Trouble Codes: Check 1 6-3-59

B-33, Trouble Codes: Check 2..... 6-3-60
B-34, Trouble Codes: Check 3..... 6-3-61
B-35, Trouble Codes: Check 4..... 6-3-62
B-36, Trouble Codes: Check 5..... 6-3-63
C-01, No Communication between Scan Tool and Control Unit..... 6-3-64
C-02, Control Unit Hard- and Software..... 6-3-80
C-03, System Voltage Circuit..... 6-3-81
C-04, Control Unit Main Relay Circuit..... 6-3-85
C-05, Crankshaft Sensor Circuit..... 6-3-97
C-06, Fuel Pump Relay Circuit..... 6-3-101
C-07, 5V Circuit 1..... 6-3-107
C-08, 5V Circuit 2..... 6-3-113
C-09, 5V Circuit 3..... 6-3-119
C-10, Pedal Position Sensor Circuit..... 6-3-127
C11, Barometer Sensor Circuit..... 6-3-139
C-12, Boost Pressure Sensor Circuit..... 6-3-140
C-13, Intake Air Temperature Sensor Circuit..... 6-3-146
C-14, Mass or Volume Air Flow Circuit..... 6-3-150
C-15, Engine Coolant Temperature Sensor Circuit..... 6-3-158
C-16, Fuel Temperature Sensor Circuit..... 6-3-162
C-17, Fuel Rail Pressure Sensor Circuit..... 6-3-166
C-18, Rail Oil Pressure Sensor Circuit..... 6-3-174
C-19, Fuel Rail Pressure Control Valve Circuit..... 6-3-175
C-20, Camshaft Position Sensor Circuit..... 6-3-181
C-21, Brake Switch Circuit..... 6-3-187
C-22, Clutch Switch Circuit..... 6-3-201
C-23, Injector Circuit..... 6-3-205
C-24, Cylinder 1 Injector Circuit..... 6-3-206
C-25, Cylinder 2 Injector Circuit..... 6-3-212
C-26, Cylinder 3 Injector Circuit..... 6-3-218
C-27, Cylinder 4 Injector Circuit..... 6-3-224
C-28, Exhaust Gas Recirculation Valve Circuit..... 6-3-230
C-29, Air Conditioning System Refrigerant Pressure Sensor..... 6-3-238
C-30, Air Conditioning System Switch Circuit..... 6-3-246
C-31, Air Conditioning System Relay Circuit..... 6-3-253
C-32, Fan Circuit..... 6-3-263
C-33, Glow Time Relay Circuit..... 6-3-280
C-34, Glow Time Telltale Circuit..... 6-3-290
C-35, Filterheating Circuit..... 6-3-294
C-36, Malfunction Indication Lamp (MIL) Circuit..... 6-3-304
C-37, Service Telltale Circuit..... 6-3-308
C-38, Oil Level Telltale Circuit..... 6-3-312
C-39, Engine Oil Level Circuit..... 6-3-316
C-40, Vehicle Speed Sensor Circuit..... 6-3-320
C-41, Function-Group Intake Air System..... 6-3-321
C-42, Function-Group Fuel System..... 6-3-322
C-43, Function-Group Low Pressure Section..... 6-3-323
C-44, Function-Group Low and High Pressure Section..... 6-3-324
C-45, Function-Group High Pressure Area..... 6-3-325
C-46, Starter Circuit..... 6-3-326
C-47, System Status Information..... 6-3-334
C-48, Engine Coolant Temperature Circuit..... 6-3-335
C-49, Engine Speed Input Signal Circuit..... 6-3-339
Special Tool..... 6-3-343

General Information

Statement of Cleanliness and Care

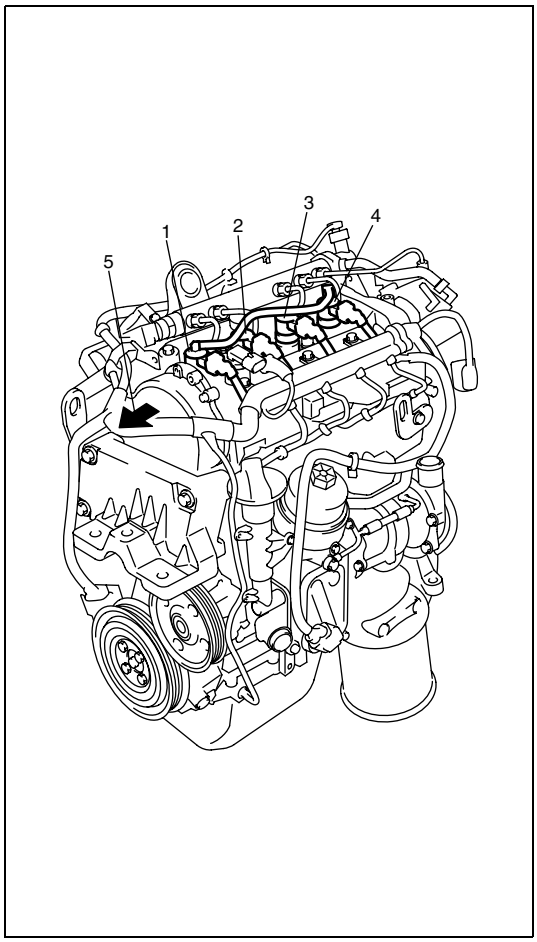

An automobile engine is a combination of many machined, honed, polished and lapped surfaces with tolerances that are measured in the thousands of an millimeter (ten thousands of inch). Accordingly, when any internal engine parts are serviced, care and cleanliness are important. Throughout this section, it should be understood that proper cleaning and protection of machined surfaces and friction areas is part of the repair procedure. This is considered standard shop practice even if not specifically stated.

- A liberal coating of engine oil should be applied to friction areas during assembly to protect and lubricate the surface on initial operation.
- Whenever valve train components, pistons, piston rings, connecting rods, rod bearings and crankshaft journal bearings are removed for service, they should be retained in order. At the time of installation, they should be installed in the same locations and with the same mating surfaces as when removed.
- Battery cables should be disconnected before any major work is performed on the engine. Failure to disconnect cables may result in damage to wire harness or other electrical parts.
- Throughout this manual, the four cylinders of the engine are identified by numbers: No.1 (1), No.2 (2), No.3 (3) and No.4 (4) as counted from crankshaft pulley side (5) to flywheel side.

General Information on Engine Service

The following information on engine service should be noted carefully, as it is important in preventing damage, and in contributing to reliable engine performance.

- When raising or supporting engine for any reason, do not use a jack under oil pan. Due to small clearance between oil pan and oil pump strainer, jacking against oil pan may cause it to be bent against strainer resulting in damaged oil pick-up unit.
- It should be kept in mind, while working on engine, that 12-volt electrical system is capable of violent and damaging short circuits. When performing any work where electrical terminals could possibly be grounded, ground cable of the battery should be disconnected at battery.
- Any time the air cleaner, air cleaner outlet hose, turbocharger, intercooler, intercooler outlet hose or intake manifold is removed, the intake opening should be covered. This will protect against accidental entrance of foreign material which could follow intake passage into cylinder and cause extensive damage when engine is started.

Precaution on fuel system service

- Work must be done with no smoking, in a well-ventilated area and away from any open flames.
- A small amount of fuel may be released after fuel line is disconnected.
  In order to reduce the chance of personal injury, cover fitting to be disconnected with a shop cloth. Put that cloth in an approved container when disconnection is completed.
- Never run engine with main relay disconnected when engine and exhaust system are hot.

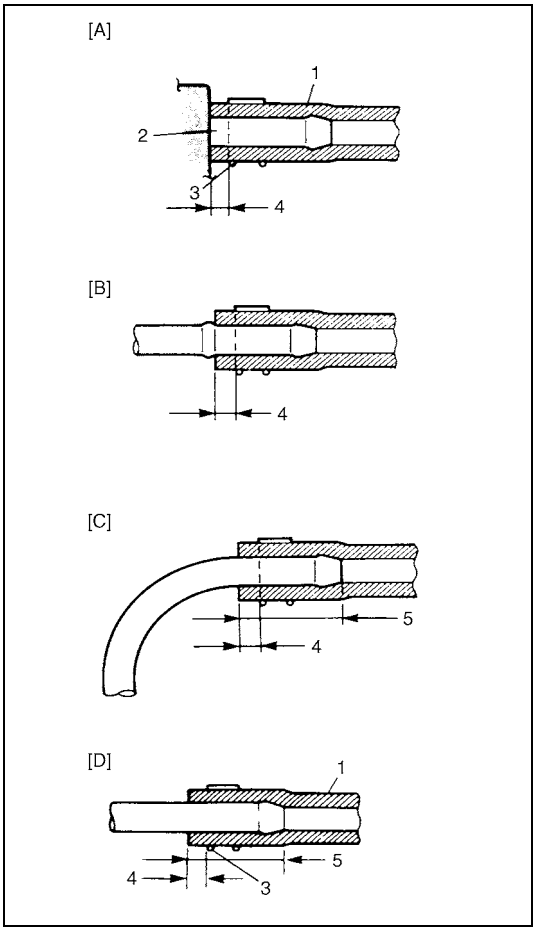

- Fuel or fuel vapor hose connection varies with each type of pipe. When reconnecting fuel or fuel vapor hose, be sure to connect and clamp each hose correctly referring to the figure.
  After connecting, make sure that it has no twist or kink.

[A]:	With short pipe, fit hose as far as it reaches pipe joint as shown.
[B]:	With following type pipe, fit hose as far as its peripheral projection as shown.
[C]:	With bent pipe, fit hose as its bent part as shown or till pipe is about 20 to 30 mm (0.79 – 1.18 in.) into the hose.
[D]:	With straight pipe, fit hose till pipe is, about 20 to 30 mm (0.79 – 1.18 in.) into the hose.
1.	Hose
2.	Pipe
3.	Clamp
4.	Clamp securely at a position 3 to 7 mm (0.12 – 0.27 in.) from hose end.
5.	20 to 30 mm (0.79 – 1.18 in.)

- When installing fuel filter union bolt or plug bolt, always use new gasket and tighten it to specified torque.
- When installing injector, fuel feed pipe or fuel pressure regulator, lubricate its O-ring with spindle oil or fuel.
- When connecting fuel pipe flare nut, first tighten flare nut by hand and then tighten it to specified torque, using back-up wrench.

Fuel pressure relief procedure

Refer to “Precautions” under “Fuel Delivery System” in Section 6E3.

Fuel leakage check procedure

Refer to “Fuel leakage check” under “Fuel Delivery System” in Section 6E3.

Engine Diagnosis

General Description

The main purpose of a vehicle diagnostic concept is locating and eliminating faults in the shortest time possible. Therefore, the following diagnostic strategy has been developed as a guideline that leads technicians straight to the source fault:

Starting point is the vehicle that contains a certain number of electronic systems, e.g. engine management system.
Each of these electronic systems consists of so - called “functional groups” that are functionally related to each other. A Coolant Temperature Sensor Circuit for example represents such a functional group.
Each of the functional groups consists of several components, such as switches, sensors, wires etc. A Coolant Temperature Sensor Circuit for example is made up of a sensor, a wiring harness, a control unit, and the software of the control unit.
Based on this structure, the first diagnostic step should be the identification and localisation of the defective electronic system, next comes the diagnosis of the corresponding defective functional group, and finally, locate and repair of the defective component within that group.

The Diagnostic System Check (described in table A, Diagnostic System Check) of this checking procedure follows that diagnostic path. Diagnosis of an electronic system according to the above described concept always starts with this Main Check.
The instructions described in the table “A, Diagnostic System Check” section must be followed closely. Every time a test or test step is passed without fault, the Diagnostic System Check continues with the next step. Some of the tests include references to related functional groups (tables B-x). When there is a fault, the corresponding functional group tests are performed in order to detect the defective functional group. When that group has been identified, the troubleshooting tables (C-x) are used to locate the faulty component. After repair of the fault, the affected functional group (tables B-x) must be rechecked to continue after this test at the appropriate position of the Diagnostic System Check (table A).
When all test steps of the Diagnostic System Check have been completed successfully, the system is fully operational.

NOTE:

For the connector number and the terminal number discribed in diagnostic flow, refer to “Wiring Diagram Manual” discribed in “Foreword” of this manual.

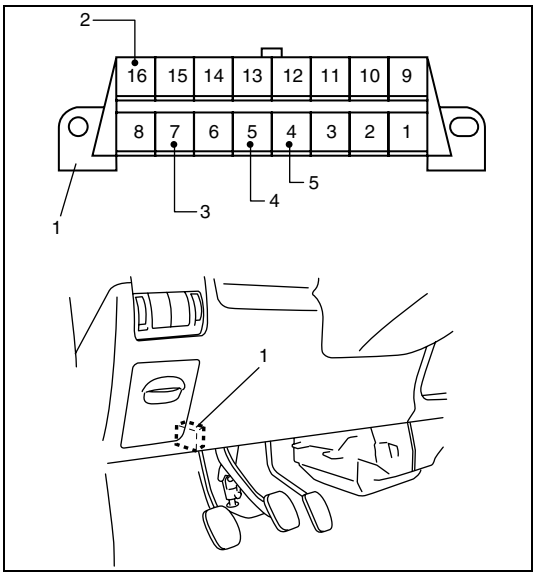

Data Link Connector (DLC)

DLC (1) in compliance with SAE J1962 in its installation position, the shape of connector and pin assignment.

K (4) line of ISO 9141 is used for SUZUKI scan tool or generic scan tool to communication with ECM, ABS control module, EPS controller, SDM and immobilizer control module.

2.	B+
4.	ECM ground
5.	Body ground

Precaution in Diagnosing Trouble

- Don't disconnect couplers from ECM, battery cable from battery, ECM ground wire harness from engine or main fuse before confirming diagnostic information stored in ECM memory.
- Diagnostic information stored in ECM memory can be cleared as well as checked by using SUZUKI scan tool or generic scan tool. Before using scan tool, read its Operator's (Instruction) Manual carefully to have good understanding as to what functions are available and how to use it.
- Be sure to read "Precautions for Electrical Circuit Service" in Section 0A before inspection and observe what is written there.
- ECM registration
  If ECM is replaced, register vehicle specification (fuel injector calibration code, vehicle variant, password for immobilizer system and secret key code for immobilizer system) into ECM referring to "ECM registration" in Section 6E3.
- Fuel injector calibration code registration
  If fuel injector is replaced, register fuel injector calibration code into ECM by performing procedure described in "ECM registration" of Section 6E3.
  Otherwise, it has an adverse effect on engine.

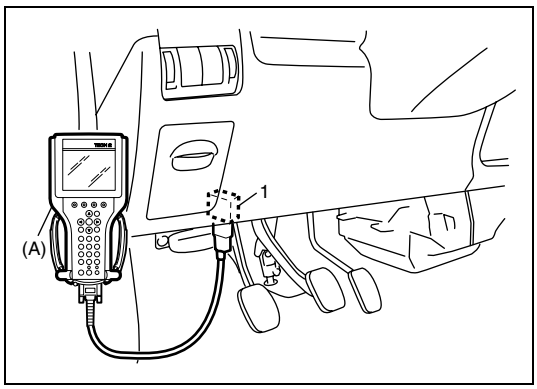

Diagnostic Trouble Code (DTC) Check

1) Prepare generic scan tool or SUZUKI scan tool.
2) Connect it to data link connector (DLC) (1) located on underside of instrument panel at driver's seat side.

Special tool
(A): SUZUKI scan tool

3) Turn ignition switch ON and confirm that MIL and SVS lamp lights.
4) Read DTC, according to instructions displayed on scan tool and print them or write them down. Refer to Scan Tool Operator's Manual for further details.
   If communication between scan tool and ECM is not possible, refer to "C-01, No Communication between Scan Tool and Control Unit".
5) After completing the check, turn ignition switch off and disconnect scan tool from data link connector.

Diagnostic Trouble Code (DTC) Clearance

1) Connect generic scan tool or SUZUKI scan tool to data link connector in the same manner as when making this connection for DTC check.
2) Turn ignition switch OFF and then ON (but engine at stop).
3) Erase DTC and pending DTC according to instructions displayed on scan tool. Refer to Scan Tool Operator's Manual for further details.

NOTE:

When DTC clear command is executed using Suzuki mode of SUZUKI scan tool with engine run, DTC can not be cleared from ECM memory.

4) After completing the clearance, turn ignition switch OFF and disconnect scan tool from data link connector.

A, Diagnostic System Check

A, Diagnostic System Check

Test	Work Order Description	Nominal Value
T01	Customer Complaint Validation	
	• Record customer complaint for later use • Verify and validate the recorded customer complaint	Is the malfunction reproducible?
	Yes: T02	No: T11
T02	System Operation as Designed	
	• Check if the customer complaint is a normal system behaviour and if the customer operates the system properly.	System okay?
	Yes: T03	No: T04
T03	Inform the Customer	
	• Inform the customer, that the system behaviour is normal respectively how to operate the system correctly.	
	Yes: –	No: –
T04	Preliminary Diagnostic Check (Visual Inspection)	
	Perform a visual check of all accessible components of the concerned system using the recorded customer complaint (this should take a maximum of 2 minutes) • All consumers turned off • Verify battery condition • Check the fuses for proper operation • Check if all ground connections are clean, tight and installed properly • Check if all connections and plugs of the concerned system are clean, tight/correctly installed and have no damages. • Check vacuum hoses for splits, kinks, leaks and proper connections. • Check hose connectors and fittings on intake system/vacuum system • After successful test/fault repair proceed to the next test step **NOTE:** **The battery must not be disconnected at this point of the Diagnostic System Check, as the control units of the vehicle could otherwise lose stored diagnostic information.** **If the system operates correctly after replacing a defective fuse, the switched circuits, which are supplied by this fuse, should be checked for short circuit to ground.**	
	Yes: T05	No: –

Test	Work Order Description	Nominal Value
T05	Connect Scan Tool and Establish Communication	
	Before connecting the scan tool, observe the instructions of the scan tool operators manual • Connect scan tool, select concerned Electronic System, establish communication and verify, that the correct control unit is installed: Refer to Table B-03, Connect Scan Tool and Establish Communication • Verify programming of the control unit: Refer to Table B-06, Programming • After successful test/fault repair proceed to the next test step	
	Yes: T07	No: –
T06	Diagnostic Trouble Codes	
	NOTE: **Trouble codes are only a reference on faults in a subgroup of the system. Trouble codes are not a direct reference on a defective component.** • Read and record diagnostic trouble codes • Delete trouble codes • Operate the vehicle over an appropriate distance at various engine speed/load conditions • If a trouble code is stored: Refer to Table B-01, Diagnostic Trouble Code • After successful test/fault repair proceed to the next test step	
	Yes: T07	No: –
T07	Check: Symptom/Customer Complaint Match	
	If a defect has been found in previous test steps, the following test can be skipped (follow result “YES”). • Evaluate customer complaint: Refer to Table B-09, Symptom Chart/Customer Complaints • After successful test/fault repair proceed to the next test step	
	Yes: T08	No: –
T08	No Matching Customer Complaint	
	If a defect has been found in previous test steps, the following test can be skipped (follow result “YES”). • Perform the following evaluation: Refer to Table B-08, No Matching Customer Complaint • After successful test/fault repair proceed to the next test step	
	Yes: T09	No: –

Test	Work Order Description	Nominal Value
T09	System/Function End Test	
	• Check if the customer complaint is repaired and the concerned system is fully operational. **NOTE:** **Drive the vehicle in different driving conditions (engine speed and engine load conditions) over a considerable distance. Pay attention to unusual noise and other system irregularities.** • Turn ignition OFF and ON • Delete trouble codes **NOTE:** **Read the trouble codes again after the test drive and check for symptoms/customer complaints. If a complaint still exists, restart the diagnostic session for a second time. If the problem can not be solved in the second diagnostic session, contact the local support centre.**	
	Yes: –	No: –
T10	Intermittent System Operation	
	Most intermittent problems are caused by faulty electrical connectors, faulty ground connections, broken wiring, temperature problems or radio interference. Intermittent faults can be traced either by using history trouble codes or the snapshot function of the scan tool in combination with the following tests: • Perform the following evaluation: Refer to Table B-18, Check: Intermittent Faults • After successful test/fault repair proceed to the next test step	
	Yes: T09	No: –

B-01, Diagnostic Trouble Code

DTC NO.	Detecting Item	Detecting Condition (DTC will set when detecting:)	Referring Table	MIL	SVS
P0090	Rail Pressure Regulator Valve Circuit Malfunction	• Rail pressure regulator signal circuit open or short • Poor performance of rail pressure regulator	C-19	–	1 driving cycle
P0093	High Pressure Fuel Circuit Leakage	Fuel high pressure circuit problem	B-32	–	1 driving cycle
P0100	Mass Air Flow Circuit Malfunction	• MAF signal circuit open or short • Poor performance of MAF sensor	B-23	3 driving cycles	–
P0106	Manifold Absolute Pressure Range/Performance Problem	Poor performance of MAP sensor	B-27	3 driving cycles	–
P0107	Manifold Absolute Pressure Circuit Low Input	Manifold absolute pressure sensor signal lower than specification	B-24	–	1 driving cycle
P0108	Manifold Absolute Pressure Circuit High Input	Manifold absolute pressure sensor signal higher than specification	B-25	3 driving cycles	–
P0110	Intake Air Temperature Circuit Malfunction	Intake air temperature sensor signal open or short	C-13	3 driving cycles	–
P0115	Engine Coolant temperature Circuit Malfunction	• Engine coolant temperature sensor signal circuit open or short • Poor performance of engine coolant temperature sensor	C-15	–	1 driving cycle
P0168	Fuel Temperature Too High	High fuel temperature (No fault present on the system)	B-28	–	–
P0180	Fuel Temperature Sensor Circuit Malfunction	Fuel temperature sensor signal higher than specification or lower than specification	C-16	–	1 driving cycle
P0190	Fuel Rail Pressure Sensor Circuit Malfunction	• Fuel rail pressure sensor signal low or high input • Poor performance of fuel rail pressure sensor	C-17	2 or 3 driving cycles	–
P0201	Injector Circuit Malfunction Cylinder – 1	• Fuel injector signal circuit open or short • Poor performance of fuel injector	C-24	–	1 driving cycle
P0202	Injector Circuit Malfunction Cylinder – 2	• Fuel injector signal circuit open or short • Poor performance of fuel injector	C-25	–	1 driving cycle
P0203	Injector Circuit Malfunction Cylinder – 3	• Fuel injector signal circuit open or short • Poor performance of fuel injector	C-26	–	1 driving cycle
P0204	Injector Circuit Malfunction Cylinder – 4	• Fuel injector signal circuit open or short • Poor performance of fuel injector	C-27	–	1 driving cycle
P0217	Coolant Temperature Too High	High engine coolant temperature (No fault present on the system)	B-28	–	–
P0230	Fuel Pump Relay Circuit Malfunction	Fuel pump relay signal circuit open or short	C-06	–	1 driving cycle
P0235	Turbo Pressure Sensor Circuit Malfunction	Turbo pressure sensor circuit open or short	C-12	–	1 driving cycle

DTC NO.	Detecting Item	Detecting Condition (DTC will set when detecting:)	Referring Table	MIL	SVS
P0335	Crankshaft Position Sensor Circuit Malfunction	Crankshaft Position Sensor signal no inputted	C-05	–	1 driving cycle
P0340	Camshaft Position Sensor Circuit Malfunction	Camshaft position sensor signal no iputted	C-20	–	–
P0380	Glow Plug Control Circuit Malfunction	Glow plug signal circuit open or short	C-33	–	1 driving cycle
P0381	Glow Indicator Lamp Circuit Malfunction	Glow indicator lamp signal circuit open or short	C-34	–	–
P0400	Exhaust Gas Recirculation Flow Malfunction	Poor performance of EGR valve	B-36	3 driving cycles	–
		Mechanical problem on EGR valve		–	1 driving cycle
P0403	Exhaust Gas Recirculation Control Circuit	EGR valve control signal circuit open or short	C-28	3 driving cycles	–
P0500	Vehicle Speed Sensor Circuit Malfunction	Incorrect signal from vehicle speed sensor	B-26	–	1 driving cycle
P0504	Brake Switch Circuit Malfunction	Incorrect signal from brake light switch	C-21	–	–
P0530	A/C Pressure Sensor Circuit Malfunction	A/C pressure sensor signal circuit open or short	C-29	–	–
P0560	Power Supply Circuit Malfunction	Power supply circuit low or high input	C-03	–	–
P0571	Brake Switch Circuit Open	Brake lamp switch signal is no inputted	C-21	–	–
P0602	Control Module Program Error	Not registered of vehicle information (fuel injector calibration code, vehicle variant (specification) or security access)	B-19	–	1 driving cycle
P0603	Control Module Internal Fail	Engine control module internal faulty (system error)	C-02	–	1 driving cycle
P0604	Control Module Internal Fail	Engine control module internal faulty (system error)	C-02	–	1 driving cycle
P0605	Control Module Internal Fail	Engine control module internal faulty (system error)	C-02	–	1 driving cycle
P0606	Control Module Internal Fail	Engine control module internal faulty (system error)	C-02	–	1 driving cycle
P0650	Malfunction Indicator Lamp (MIL) Circuit Malfunction	Malfunction Indicator Lamp (MIL) control signal circuit open or short	C-36	1 driving cycle	–
P0683	Glow Plug Feed Back Circuit	Glow plug circuit open or short	C-33	–	1 driving cycle
P0685	Main Relay Circuit Malfunction	Main relay signal circuit open or short	C-04	–	1 driving cycle
P1093	Low Pressure Fuel Circuit Leakage	Fuel low pressure circuit problem	B-33	–	1 driving cycle
P1105	Barometric Pressure Sensor Circuit Malfunction	Poor performance of ECM	C-11	3 driving cycles	–
P1120	Pedal Position Sensor 1 Circuit Malfunction	• Pedal position sensor 1 circuit open or short • Poor performance of pedal position sensor 1	C-10	–	1 driving cycle

DTC NO.	Detecting Item	Detecting Condition (DTC will set when detecting:)	Referring Table	MIL	SVS
P1122	Pedal Position Sensor 2 Circuit Malfunction	Pedal position sensor 2 circuit open or short	C-10	–	1 driving cycle
P1180	Fuel Filter Heater Circuit Malfunction	Fuel heater circuit open or short	C-35	–	–
P1190	Fuel Pressure Regulator Flow	Poor performance of fuel pressure regulator	C-18	–	1 driving cycle
P1191	Fuel Pressure Regulator Circuit Malfunction	Mechanical problem in fuel high pressure section or fuel low pressure section	B-34	–	1 driving cycle
P1192	Rail Pressure Higher Than Maximum	Measured fuel rail pressure is higher than specification	C-18	–	1 driving cycle
P1481	Radiator Fan Output 1 Circuit Malfunction	Radiator fan output 1 circuit open or short	C-32	–	1 driving cycle
P1482	Radiator Fan Output 2 Circuit Malfunction	Radiator fan output 2 circuit open or short	C-32	–	1 driving cycle
P1530	A/C Compressor Signal Circuit Malfunction	A/C relay signal circuit open or short	C-31	–	–
P1600	A/D Converter Malfunction	Engine control module internal faulty (system error)	C-02	–	1 driving cycle
P1610	Secret key/Password Not Program	Refer to “Diagnostic Trouble Code (DTC) Table” in Section 8G3.			
P1611	P assword is Not Matched				
P1612	No Signal From Immobilizer Control Module				
P1613	Immobilizer System Malfunction				
P1614	Incorrect Signal From Immobilizer Control Module				
P1620	Sensor Supply Circuit 1 Fail	Sensor power supply 1 low or high input	C-07	–	1 driving cycle
P1635	Sensor Supply Circuit 2 Fail	Sensor power supply 2 low or high input	C-08	–	1 driving cycle
P1639	Sensor Supply Circuit 3 Fail	Sensor power supply 3 low or high input	C-09	–	1 driving cycle
P1657	Oil Level Lamp Circuit Malfunction	Oil level lamp control signal circuit open or short	C-38	–	–
P1660	Shut Off Valve	Mechanical problem in fuel shut off valve	B-35	–	1 driving cycle
P1680	Coolant Temperature Signal	Engine coolant temperature meter signal open or short	C-48	–	–
P1690	Warning Lamp Defect	Service vehicle soon (SVS) lamp control signal circuit open or short	C-37	–	–
P1725	Engine Speed Signal Circuit Malfunction	Tachometer signal circuit open or short	C-49	–	–
P2146	Injector Power Supply Circuit Malfunction	Fuel injector control signal low or high input	C-23	–	1 driving cycle

NOTE:

“–” mark in MIL or SVS column indicates that indicator light does not light.

B-02, Data List

As the data values given below are standard values estimated on the basis of values obtained from the normally operating vehicles by using a scan tool, use them as reference values. Even when the vehicle is in good condition, there may be cases where the checked value does not tall within each specified data range. Therefore, judgment as abnormal should not be made by checking with these data alone.
Also, conditions in the table below that can be checked by the scan tool are those detected by ECM and output from ECM as commands and there may be cases where the engine or actuator is not operating (in the condition) as indicated by the scan tool.

Test	Work Order Description	Nominal Value
T01	Tester Display – Battery Voltage	
	• Ignition ON • Engine OFF • All consumers turned off	11.0 ... 13.5 V
	• Engine starting	greater than 8.0 V
	• Engine running at idle speed, operating temperature **Concerned Terminals:** E27-1, E27-2, E27-3, E27-50 (For RM413D) G88-1, G88-2, G88-3, G88-50 (For RB413D)	12.0 ... 15.0 V
	Yes: T02	No: C-03
T02	Tester Display – Main Relay	
	• Ignition OFF	OFF
	• Ignition ON • Engine OFF • All consumers turned off **Concerned Terminals:** E27-4, E27-5, E27-6, E27-80 (For RM413D) G88-4, G88-5, G88-6, G88-80 (For RB413D)	ON
	Yes: T03	No: C-04
T03	Tester Display – Fuel Pump	
	• Ignition ON • Engine OFF • All consumers turned off • Wait at least 20 s	OFF
	• Engine running at idle speed, operating temperature **Concerned Terminals:** E27-75 (For RM413D) G88-75 (For RB413D)	ON
	Yes: T04	No: C-06
T04	Tester Display – PPS 1 Voltage	
	• Ignition ON • Engine OFF • All consumers turned off • Accelerator pedal actuated to full load stop	greater than 3.80 V
	• Accelerator pedal not actuated	less than 1.00 V
	• Accelerator pedal slightly actuated **Concerned Terminals:** E27-15, E27-32, E27-35, E27-41, E27-65, E27-83 (For RM413D) G88-15, G88-32, G88-35, G88-41, G88-65, G88-83 (For RB413D)	greater than 1.00 V
	Yes: T05	No: C-10

Test	Work Order Description	Nominal Value
T05	Tester Display – PPS 2 Voltage	
	• Ignition ON • Engine OFF • All consumers turned off • Accelerator pedal actuated to full load stop • Accelerator pedal not actuated • Accelerator pedal slightly actuated **Concerned Terminals:** E27-15, E27-32, E27-35, E27-41, E27-65, E27-83 (For RM413D) G88-15, G88-32, G88-35, G88-41, G88-65, G88-83 (For RB413D)	greater than 1.8 V less than 0.50 V greater than 0.50 V
	Yes: T06	No: C-10
T06	Tester Display – Calculated Pedal Position	
	• Ignition ON • Engine OFF • All consumers turned off • Accelerator pedal actuated to full load stop • Accelerator pedal not actuated **Concerned Terminals:** E27-15, E27-32, E27-35, E27-41, E27-65, E27-83 (For RM413D) G88-15, G88-32, G88-35, G88-41, G88-65, G88-83 (For RB413D)	greater than 99 % less than 1 %
	Yes: T07	No: C-10
T07	Tester Display – Closed Throttle Position	
	• Ignition ON • Engine OFF • All consumers turned off • Accelerator pedal actuated to full load stop • Accelerator pedal not actuated **Concerned Terminals:** E27-15, E27-32, E27-35, E27-41, E27-65, E27-83 (For RM413D) G88-15, G88-32, G88-35, G88-41, G88-65, G88-83 (For RB413D)	Inactive Active
	Yes: T08	No: C-10
T08	Tester Display – Desired Idle	
	• Engine running at idle speed, operating temperature • All consumers turned off • Accelerator pedal not actuated **Concerned Terminals:** C66-43, C66-59 (For RM413D) D26-43, D26-59 (For RB413D)	780 ... 900 RPM.
	Yes: T09	No: C-05

Test	Work Order Description	Nominal Value
T09	Tester Display – Engine Speed	
	• Ignition ON • Engine starting • Engine running at idle speed, operating temperature • All consumers turned off • Accelerator pedal not actuated • Accelerator pedal briefly actuated to full load stop **Concerned Terminals:** C66-43, C66-59 (For RM413D) D26-43, D26-59 (For RB413D)	greater than 60 RPM. 780 ... 900 RPM. 850 ... 5000 RPM. Scan tool display depending on engine speed
	Yes: T10	No: C-05
T10	Tester Display – Coolant Temperature	
	• Engine running at idle speed, operating temperature • All consumers turned off **Concerned Terminals:** C66-29, C66-54 (For RM413D) D26-29, D26-54 (For RB413D)	80 ... 110 °C 176 ... 230 °F 2.50 ... 0.40 V Scan tool display depending on engine condition
	Yes: T11	No: C-15
T11	Tester Display – Fuel Temperature	
	• Ignition ON • Engine OFF • All consumers turned off **Concerned Terminals:** E27-13, E27-61 (For RM413D) G88-13, G88-61 (For RB413D)	–10 ... 80 °C 14 ... 176 °F
	Yes: T12	No: C-16
T12	Tester Display – Intake Air Temperature	
	• Engine running at idle speed, operating temperature • All consumers turned off **Concerned Terminals:** C66-10, C66-27 (For RM413D) D26-10, D26-27 (For RB413D)	Scan tool display converges to outside temperature
	Yes: T13	No: C-13
T13	Tester Display – MAF/MAF sensor voltage	
	• Engine running • All consumers turned off • Accelerator pedal slightly actuated • Engine running at idle speed, operating temperature • Accelerator pedal not actuated • Wait at least 70 s **Concerned Terminals:** C66-14, C66-27, C66-40 (For RM413D) D26-14, D26-27, D26-40 (For RB413D)	greater than 20 kg/h greater than 1.70 V 2.8 ... 5.5 g/sec 1.00 ... 2.20 V 5.5 ... 8.3 g/sec 1.70 ... 2.5 V
	Yes: T14	No: C-14

Test	Work Order Description	Nominal Value
T14	Tester Display – Barometric Pressure/Barometric Sensor Voltage	
	• Ignition ON • Engine OFF • All consumers turned off • Compare displayed pressure with outside-air pressure **NOTE:** **This parameter is an internal value of the control unit.** **Concerned Terminals:** –	90 ... 110 kPa 3.5 ... 4.5 V Scan tool display is nearly identical to outside-air pressure
	Yes: T15	No: C-11
T15	Tester Display – Turbo Pressure /Turbo Pressure Voltage	
	• Ignition ON • Engine OFF • All consumers turned off • Compare displayed pressure with outside-air pressure • Engine running at idle speed, operating temperature • Increase engine speed to 3500 rpm **Concerned Terminals:** C66-23, C66-24, C66-41 (For RM413D) D26-23, D26-24, D26-41 (For RB413D)	90 ... 110 kPa 1.5 ... 2.0 V Scan tool display is nearly identical to outside-air pressure 90 ... 110 kPa 1.5 ... 2.0 V greater than 110 kPa greater than 2.0 V
	Yes: T16	No: C-12
T16	Tester Display – EGR Valve (Exhaust-Gas Recirculation)	
	• Ignition ON • Engine OFF • All consumers turned off • Engine running at idle speed, operating temperature • Accelerator pedal briefly actuated to full load stop • Accelerator pedal not actuated • Wait at least 70 s **Concerned Terminals:** C66-5, C66-15 (For RM413D) D26-5, D26-15 (For RB413D)	OFF ON OFF
	Yes: T17	No: C-28

Test	Work Order Description	Nominal Value
T17	Tester Display – EGR Solenoid Duty Cycle	
	• Engine running at idle speed, operating temperature • All consumers turned off • Accelerator pedal briefly actuated to full load stop • Accelerator pedal not actuated • Wait at least 70 s **Concerned Terminals:** C66-5, C66-15 (For RM413D) D26-5, D26-15 (For RB413D)	less than 10 % greater than 40 % Value changing briefly less than 10 %
	Yes: T18	No: C-28
T18	Tester Display – Desired Rail Pressure	
	• Engine running at idle speed, operating temperature • All consumers turned off • Accelerator pedal not actuated • Accelerator pedal briefly actuated to full load stop **Concerned Terminals:** C66-6, C66-8, C66-38 (For RM413D) D26-6, D26-8, D26-38 (For RB413D)	23.00 ... 29.00 MPa greater than 26.00 MPa Value changing briefly
	Yes: T19	No: C-17
T19	Tester Display – Fuel Rail Pressure	
	• Engine running at idle speed, operating temperature • All consumers turned off • Accelerator pedal not actuated • Accelerator pedal briefly actuated to full load stop **Concerned Terminals:** C66-6, C66-8, C66-38 (For RM413D) D26-6, D26-8, D26-38 (For RB413D)	23.00 ... 29.00 MPa 1.00 ... 1.80 V greater than 25.00 MPa greater than 1.80 V
	Yes: T20	No: C-17
T20	Tester Display – Rail Pressure Regulator	
	• Engine running at idle speed, operating temperature • All consumers turned off • Accelerator pedal not actuated • Accelerator pedal briefly actuated to full load stop **Concerned Terminals:** C66-4, C66-34, E27-5 (For RM413D) D26-4, D26-34, G88-5 (For RB413D)	greater than 25 % Value changing briefly
	Yes: T21	No: C-19
T21	Tester Display – Fuel Quantity	
	• Engine running at idle speed, operating temperature • All consumers turned off • Accelerator pedal not actuated • Accelerator pedal slightly actuated **Concerned Terminals:** –	3.0 ... 6.0 mm^3/str greater than 6.0 mm^3/str
	Yes: T22	No: C-23

Test	Work Order Description	Nominal Value
T22	Tester Display – SOI	
	• Engine running at idle speed, operating temperature • All consumers turned off • Accelerator pedal not actuated **Concerned Terminals:** –	-1.0 ... 3.0 °CA
	Yes: T23	No: C-23
T23	Tester Display – A/C Switch	
	• Ignition ON • Engine OFF • All consumers turned off **NOTE:** **This data list parameter is only valid if the concerned component is installed.**	OFF
	• Engine running at idle speed, operating temperature • Air conditioning system is switched on. **NOTE:** **This data list parameter is only valid if the concerned component is installed.** **Concerned Terminals:** E27-28 (For RM413D) G88-28 (For RB413D)	ON
	Yes: T24	No: C-30
T24	Tester Display – A/C Pressure	
	• Engine running at idle speed, operating temperature • All consumers turned off **NOTE:** **This data list parameter is only valid if the concerned component is installed.**	300...1200 kPa 0.5...1.8 V
	• Air conditioning system is switched on. **NOTE:** **This data list parameter is only valid if the concerned component is installed.** **Concerned Terminals:** E27-10, E27-37, E27-87 (For RM413D) G88-10, G88-37, G88-87 (For RB413D)	greater than 700 kPa greater than 0.8 V
	Yes: T25	No: C-29

Test	Work Order Description	Nominal Value
T25	Tester Display – A/C Magnet Clutch	
	• Engine running at idle speed, operating temperature • All consumers turned off **NOTE:** **This data list parameter is only valid if the concerned component is installed.**	OFF
	• Air conditioning system is switched on. **NOTE:** **This data list parameter is only valid if the concerned component is installed.** **Concerned Terminals:** E27-79 (For RM413D) G88-79 (For RB413D)	ON
	Yes: T26	No: C-31
T26	Tester Display – Radiator Fan	
	• Engine running • All consumers turned off • Coolant temperature is less than 98 °C (208 °F)	OFF
	• Coolant temperature is greater than 97 °C (207 °F) **Concerned Terminals:** E27-7, E27-8 (For RM413D) G88-7, G88-8 (For RB413D)	LOW
	Yes: T27	No: C-32
T27	Tester Display – Glow Relay	
	• Ignition ON • Engine OFF • All consumers turned off	ON
	• Wait at least 10 s **Concerned Terminals:** E27-70, E27-74 (For RM413D) G88-70, G88-74 (For RB413D)	OFF
	Yes: T28	No: C-33
T28	Tester Display – Brake Switch	
	• Ignition ON • Engine OFF • All consumers turned off	OFF
	• Brake pedal actuated **Concerned Terminals:** E27-68, E27-81 (For RM413D) G88-68, G88-81 (For RB413D)	ON
	Yes: T29	No: C-21

Test	Work Order Description	Nominal Value
T29	Tester Display – Vehicle Speed	
	• Ignition ON • Engine OFF • All consumers turned off • Vehicle travelling (constant speed, approximately 30 km/h (19 mph)) **Concerned Terminals:** E27-89 (For RM413D) G88-89 (For RB413D)	0 km/h 0 mph 30 km/h 19 mph Diagnostic tester display converges to speedometer display
	Yes: T30	No: C-40
T30	Tester Display – Service Vehicle Soon (SVS) Indicator Lamp	
	• Ignition ON • Engine OFF • All consumers turned off • Wait at least 5 s **Concerned Terminals:** E27-77 (For RM413D) G88-77 (For RB413D)	ON OFF
	Yes: T31	No: C-37
T31	Tester Display – Glow Indicator Lamp	
	• Ignition ON • Engine OFF • All consumers turned off • Wait at least 10 s **Concerned Terminals:** E27-52 (For RM413D) G88-52 (For RB413D)	The telltale is briefly ON. Off 12V
	Yes: T32	No: C-34
T32	Tester Display – Oil Level Warning	
	• Ignition ON • Engine OFF • All consumers turned off **Concerned Terminals:** E27-26 (For RM413D) G88-26 (For RB413D)	OFF
	Yes: –	No: C-39

B-03, Connect Scan Tool and Establish Communication

Updata the diagnostic software for SUZUKI scan tool referring to “Tech2 Programing Manual” in case that the diagnosis can not be performed due to the old diagnostic software. In case that the diagnosis can not be performed even though the diagnostic software whose version is appropriate, is used, go to “C-01, No Communication between Scan Tool and Control Unit”.

B-04, Actuator Test

Test	Work Order Description	Nominal Value
T01	Tester Display – Fuel Pump Relay Test	
	• Ignition ON • Engine OFF • Press corresponding key in the system main menu to select Output Tests under Misc Test, select the desired test and confirm with ENTER. Follow the instructions in the scan tool display. • After the test is started, the corresponding component can be actuated using the YES/NO keys. • Press NO key OFF • Press YES key ON **Concerned Terminals:** E27-75 (For RM413D) G88-75 (For RB413D)	The fuel pump is not running Noise check: Clicking noise from the relay and Is the fuel pump running?
	Yes: T02	No: C-06
T02	Tester Display – EGR Solenoid Test	
	• Ignition ON • Engine OFF • Press corresponding key in the system main menu to select Output Tests under Misc Test, select the desired test and confirm with ENTER. Follow the instructions in the scan tool display. • After the test is started, the corresponding component can be actuated using the YES/NO keys. • Press NO key OFF • Press YES key ON **Concerned Terminals:** C66-5, C66-15 (For RM413D) D26-5, D26-15 (For RB413D)	Noise check: Clicking noise from the actuator
	Yes: T03	No: C-28

Test	Work Order Description	Nominal Value
T03	Tester Display – Glow plug control	
	• Ignition ON • Engine OFF • Press corresponding key in the system main menu to select Output Tests under Misc Test, select the desired test and confirm with ENTER. Follow the instructions in the scan tool display. • After the test is started, the corresponding component can be actuated using the YES/NO keys. • Press YES key ON • Press NO key OFF **Concerned Terminals:** E27-70, E27-74 (For RM413D) G88-70, G88-74 (For RB413D)	Diagnosis Glow Controller Active Diagnosis Glow Controller Inactive
	Yes: T04	No: C-33
T04	Tester Display – Radiator Fan Test	
	• Ignition ON • Engine OFF • Press corresponding key in the system main menu to select Output Tests under Misc Test, select the desired test and confirm with ENTER. Follow the instructions in the scan tool display. • After the test is started, the corresponding component can be actuated using the YES/NO keys. • Press NO key OFF • Press YES key ON **Concerned Terminals:** E27-7, E27-8 (For RM413D) G88-7, G88-8 (For RB413D)	All cooling fans are switched off The blower speed is increased stepwise. The following component is switched on: Radiator Fan Motor
	Yes: T05	No: C-32

Test	Work Order Description	Nominal Value
T05	Tester Display – Malfunction Indicator Lamp (MIL) Test	
	• Ignition ON • Engine OFF • Press corresponding key in the system main menu to select Output Tests under Misc Test, select the desired test and confirm with ENTER. Follow the instructions in the scan tool display. • After the test is started, the corresponding component can be actuated using the YES/NO keys.	
	• Press NO key OFF	The following component is switched off: Malfunction indicator lamp (MIL)
	• Press YES key ON	The following component is switched on: Malfunction indicator lamp (MIL)
	Concerned Terminals: E27-78 (For RM413D) G88-78 (For RB413D)	
	Yes: T06	No: C-36
T06	Tester Display – Service Vehicle Soon (SVS) Lamp Test	
	• Ignition ON • Engine OFF • Press corresponding key in the system main menu to select Output Tests under Misc Test, select the desired test and confirm with ENTER. Follow the instructions in the scan tool display. • After the test is started, the corresponding component can be actuated using the YES/NO keys.	
	• Press NO key OFF	The following component is switched off: Service vehicle soon (SVS) lamp
	• Press YES key ON	The following component is switched on: Service vehicle soon (SVS) lamp
	Concerned Terminals: E27-77 (For RM413D) G88-77 (For RB413D)	
	Yes: T07	No: C-37

Test	Work Order Description	Nominal Value
T7	Tester Display – Glow Indicator Lamp Test	
	• Ignition ON • Engine OFF • Press corresponding key in the system main menu to select Output Tests under Misc Test, select the desired test and confirm with ENTER. Follow the instructions in the scan tool display. • After the test is started, the corresponding component can be actuated using the YES/NO keys.	
	• Press NO key OFF	The following component is switched off: Glow indicator lamp
	• Press YES key ON	The following component is switched on: Glow indicator lamp
	Concerned Terminals: E27-52 (For RM413D) G88-52 (For RB413D)	
	Yes: –	No: C-34

B-05, Additional Functions

Test	Work Order Description	Nominal Value
T01	Tester Display – Read ECM Identification	
	• Ignition ON • Engine OFF • Press corresponding key in the system main menu to select Data List of ECM Registration under Misc Test, select the desired test and confirm with ENTER. Follow the instructions in the scan tool display. **NOTE:** **This test can be used to monitor various different system specific data.** **Concerned Terminals:** –	Displayed value okay?
	Yes: T02	No: C-02
T02	Tester Display – Display Immobilizer Status	
	Check immobilizer control system status referring to “Scan Tool Data” in Section 8G3.	
	Yes: –	No: C-02

B-06, Programming

Test	Work Order Description	Nominal Value
T01	Tester Display Registration (Immobilizer System)	
	Refer to “Registration Procedure of Immobilizer System Components” in Section 8G3.	Programming okay?
	Yes: T02	No: C-02
T02	Tester Display ECM Setting	
	Refer to “ECM registration” in Section 6E3.	Programming okay?
	Yes: T03	No: C-02
T03	Tester Display Replace Injector	
	Refer to “ECM registration” in Section 6E3.	Programming okay?
	Yes: –	No: C-02

B-07, ECU Control

Test	Work Order Description	Nominal Value
T01	Tester Display – RPM Control	
	• Engine idling • Press corresponding key in the system main menu to select Output Tests under Misc Test, select the desired test and confirm with ENTER. Follow the instructions in the scan tool display. Engine Speed (RPM) Control • After the test is started, the corresponding component can be actuated using the YES/NO keys. • The YES/NO keys can be used to change engine speed in the range from approximately 800 rpm to 3000 rpm. **Concerned Terminals:** –	Engine Speed between 800 rpm and 3000 rpm
	Yes: –	No: C-02

B-08, No Matching Customer Complaint

Test	Work Order Description	Nominal Value
T01	No Matching Customer Complaint	
	The following test steps may or may not be helpful, they are only a proposal. Diagnostic Trouble Codes • Read and record diagnostic trouble codes • Check for history trouble code. If a history trouble code is stored this may indicate the circuit which has the intermittent condition. • Use the following table to obtain the concerned functional group and perform the following additional test steps, while performing the troubleshooting in the C-x tables. Refer to Table B-01, Diagnostic Trouble Code • Move the related connectors, wiring harness and components in order to find the failure. Switch on all electric consumers by turns, because this can cause an electromagnetic interference in a circuit. Use the oscilloscope to observe the wiring harness for disturbances. Operate the system under different conditions over a considerable time. Quick Check • Perform the following evaluation: Refer to Table B-02, Data List Refer to Table B-04, Actuator Test • Check Additional Information Refer to Table B-05, Additional Functions • After successful test/fault repair proceed to the next test step	
	Yes: –	No: –

B-09, Symptom Chart/Customer Complaints

Test	Work Order Description	Nominal Value
T01	Check: Symptom/Customer Complaint Match	
	Select the suitable symptom group, which fits the complaint. • Refer to Table B-10, Complaint: Engine Start • Refer to Table B-11, Complaint: Engine Idling • Refer to Table B-12, Complaint: Engine Behaviour Under Normal Driving Conditions • Refer to Table B-13, Complaint: Engine Performance • Refer to Table B-14, Complaint: Exhaust Gas • Refer to Table B-15, Complaint: Oil/Coolant/Fuel-System • Refer to Table B-16, Complaint: Engine Mechanic • Refer to Table B-17, Check: Functionality of Adjacent Systems	
	Yes: –	No: –

B-10, Complaint: Engine Start

Customer complaint	Remedy
Engine does not start, starter slow/does not turn	Perform the following test step: • Refer to Table C-46, Starter Circuit
Engine does not start, starter runs normal	The following tests must be performed in the given order: • Refer to Table B-02, Data List • Refer to Table B-21, Fuel System • Refer to Table B-02, Data List “T18” Desired Rail Pressure • Refer to Table B-02, Data List “T19” Fuel Rail Pressure • Refer to Table B-02, Data List “T20” Rail Pressure Regulator • Refer to Table B-02, Data List “T21” Fuel Quantity • Refer to Table B-02, Data List “T22” SOI • Refer to Table B-02, Data List “T09” Engine Speed The check of the following system is only necessary, if the outside temperature is less than 0 °C (32 °F). • Refer to Table B-04 Actuator Test “T03” Glow Plug Control Test • Refer to Table C-35, Filterheating Circuit
Engine starts poorly, starter runs normal	The following tests must be performed in the given order: • Refer to Table B-02 Data List “T01” Battery Voltage • Refer to Table B-21, Fuel System • Refer to Table B-22, Intake-Air System • Refer to Table B-02 Data List “T14” Barometric Pressure/Barometric Sensor Voltage • Refer to Table B-02 Data List “T10” Coolant Temperature • Refer to Table B-02 Data List “T11” Fuel Temperature • Refer to Table B-02 Data List “T12” Intake Air Temperature • Refer to Table B-02 Data List “T18” Desired Rail Pressure • Refer to Table B-02 Data List “T19” Fuel Rail Pressure • Refer to Table B-02 Data List “T20” Rail Pressure Regulator • Refer to Table B-02 Data List “T21” Fuel Quantity • Refer to Table B-02 Data List “T22” SOI • Refer to Table B-02 Data List “T09” Engine Speed The check of the following system is only necessary, if the outside temperature is less than 0 °C (32 °F). • Refer to Table B-04 Actuator Test “T03” Glow Plug Control Test • Refer to Table C-35, Filterheating Circuit

B-11, Complaint: Engine Idling

Customer complaint	Remedy
Engine stalls at idle speed, no restart possible	The following tests must be performed in the given order: • Refer to Table B-02 Data List “T01” Battery Voltage • Refer to Table B-21, Fuel System • Refer to Table B-02 Data List “T18” Desired Rail Pressure • Refer to Table B-02 Data List “T19” Fuel Rail Pressure • Refer to Table B-02 Data List “T20” Rail Pressure Regulator • Refer to Table B-02 Data List “T21” Fuel Quantity • Refer to Table B-02 Data List “T22” SOI • Refer to Table B-02 Data List “T09” Engine Speed • Check compression
Engine stalls during operation, restart possible	The following tests must be performed in the given order: • Refer to Table B-02 Data List “T01” Battery Voltage • Refer to Table B-21, Fuel System • Refer to Table B-02 Data List “T18” Desired Rail Pressure • Refer to Table B-02 Data List “T19” Fuel Rail Pressure • Refer to Table B-02 Data List “T20” Rail Pressure Regulator • Refer to Table B-02 Data List “T21” Fuel Quantity • Refer to Table B-02 Data List “T22” SOI • Refer to Table B-22, Intake-Air System • Refer to Table B-02 Data List “T09” Engine Speed
Engine does not react on accelerator pedal actuation	The following tests must be performed in the given order: • Refer to Table B-02 Data List “T04” PPS 1 • Refer to Table B-02 Data List “T05” PPS 2 • Refer to Table B-21, Fuel System • Refer to Table B-02 Data List “T18” Desired Rail Pressure • Refer to Table B-02 Data List “T19” Fuel Rail Pressure • Refer to Table B-02 Data List “T20” Rail Pressure Regulator • Refer to Table B-02 Data List “T21” Fuel Quantity • Refer to Table B-02 Data List “T22” SOI
Engine idle speed is increased	The following tests must be performed in the given order: • Refer to Table B-02 Data List “T01” Battery Voltage • Refer to Table B-02 Data List “T04” PPS 1 • Refer to Table B-02 Data List “T05” PPS 2 • Refer to Table B-02 Data List “T08” Desired Idle • Refer to Table B-02 Data List “T09” Engine Speed • Refer to Table B-02 Data List “T12” Intake Air Temperature • Refer to Table B-02 Data List “T11” Fuel Temperature • Refer to Table B-02 Data List “T10” Coolant Temperature • Refer to Table B-02 Data List “T21” Fuel Quantity • Refer to Table B-02 Data List “T22” SOI

Customer complaint	Remedy
Idle speed too low	The following tests must be performed in the given order: • Refer to Table B-02 Data List “T01” Battery Voltage • Refer to Table B-02 Data List “T04” PPS 1 • Refer to Table B-02 Data List “T05” PPS 2 • Refer to Table B-06 Programming “T03” Replace Injector • Refer to Table B-02 Data List “T08” Desired Idle • Refer to Table B-02 Data List “T09” Engine Speed • Refer to Table B-21, Fuel System • Refer to Table B-02 Data List “T21” Fuel Quantity • Refer to Table B-02 Data List “T22” SOI
Surging /shaking while idling	The following tests must be performed in the given order: • Refer to Table B-02 Data List “T01” Battery Voltage • Refer to Table B-02 Data List “T04” PPS 1 • Refer to Table B-02 Data List “T05” PPS 2 • Refer to Table B-06 Programming “T03” Replace Injector • Refer to Table B-21, Fuel System • Refer to Table B-22, Intake-Air System • Refer to Table B-02 Data List “T21” Fuel Quantity • Refer to Table B-02 Data List “T22” SOI • Refer to Table B-02 Data List “T18” Desired Rail Pressure • Refer to Table B-02 Data List “T19” Fuel Rail Pressure • Refer to Table B-02 Data List “T20” Rail Pressure Regulator • Refer to Table B-02 Data List “T08” Desired Idle • Refer to Table B-02 Data List “T09” Engine Speed Check compression pressure The check of the following system is only necessary, if the outside temperature is less than 0 °C (32 °F). • Refer to Table B-04 Actuator Test “T03” Glow Plug control Test
Abnormal combustion sound, engine knocking	The following tests must be performed in the given order: • Refer to Table B-02 Data List “T01” Battery Voltage • Refer to Table B-02 Data List “T10” Coolant Temperature • Refer to Table B-02 Data List “T11” Fuel Temperature • Refer to Table B-02 Data List “T12” Intake Air Temperature • Refer to Table B-02 Data List “T14” Barometric Pressure/Barometric Sensor Voltage • Refer to Table B-22, Intake-Air System • Refer to Table B-04 Actuator Test “T03” Glow Plug Control Test • Refer to Table B-21, Fuel System • Refer to Table B-02 Data List “T18” Desired Rail Pressure • Refer to Table B-02 Data List “T19” Fuel Rail Pressure • Refer to Table B-02 Data List “T20” Rail Pressure Regulator • Refer to Table B-02 Data List “T21” Fuel Quantity • Refer to Table B-02 Data List “T22” SOI

B-12, Complaint: Engine Behaviour Under Normal Driving Conditions

Customer complaint	Remedy
Engine stalls during operation, no restart possible	The following tests must be performed in the given order: • Refer to Table B-02 Data List “T01” Battery Voltage • Refer to Table B-21, Fuel System • Refer to Table B-22, Intake-Air System • Refer to Table B-02 Data List “T18” Desired Rail Pressure • Refer to Table B-02 Data List “T19” Fuel Rail Pressure • Refer to Table B-02 Data List “T20” Rail Pressure Regulator • Refer to Table B-02 Data List “T21” Fuel Quantity • Refer to Table B-02 Data List “T22” SOI • Refer to Table B-02 Data List “T09” Engine Speed The check of the following system is only necessary, if the outside temperature is less than 0 °C (32 °F). • Refer to Table C-35, Filterheating Circuit
Engine stalls during operation, restart possible	The following tests must be performed in the given order: • Refer to Table B-02 Data List “T01” Battery Voltage • Refer to B-21, Fuel System • Refer to Table B-22, Intake-Air System • Refer to Table B-02 Data List “T18” Desired Rail Pressure • Refer to Table B-02 Data List “T19” Fuel Rail Pressure • Refer to Table B-02 Data List “T20” Rail Pressure Regulator • Refer to Table B-02 Data List “T21” Fuel Quantity • Refer to Table B-02 Data List “T22” SOI • Refer to Table B-02 Data List “T09” Engine Speed The check of the following system is only necessary, if the outside temperature is less than 0 °C (32 °F). • Refer to Table C-35, Filterheating Circuit
Erratic engine operation, reproducible misfire	The following tests must be performed in the given order: • Refer to Table B-02 Data List “T01” Battery Voltage • Refer to Table B-02 Data List “T04” PPS 1 • Refer to Table B-02 Data List “T05” PPS 2 • Refer to Table B-06 PROGRAMMING “T03” Replace Injector • Refer to Table B-21, Fuel System • Refer to Table B-02 Data List “T18” Desired Rail Pressure • Refer to Table B-02 Data List “T19” Fuel Rail Pressure • Refer to Table B-02 Data List “T20” Rail Pressure Regulator • Refer to Table B-02 Data List “T21” Fuel Quantity • Refer to Table B-02 Data List “T22” SOI • Refer to Table B-02 Data List “T12” Intake Air Temperature • Refer to Table B-02 Data List “T11” Fuel Temperature • Refer to Table B-02 Data List “T10” Coolant Temperature • Refer to Table B-02 Data List “T14” Barometric Pressure/Barometric Sensor Voltage • Refer to Table B-22, Intake-Air System Check compression pressure The check of the following system is only necessary, if the outside temperature is less than 0 °C (32 °F). • Refer to Table B-04 Actuator Test “T03” Glow Plug Control Test • Refer to Table C-35, Filterheating Circuit

Customer complaint	Remedy
Jerky engine operation	The following tests must be performed in the given order: • Refer to Table B-02 Data List “T01” Battery Voltage • Refer to Table B-02 Data List “T28” Brake Switch • Refer to Table B-02 Data List “T04” PPS 1 • Refer to Table B-02 Data List “T05” PPS 2 • Refer to Table B-06 Programming “T03” Replace Injector • Refer to Table B-21, Fuel System • Refer to Table B-02 Data List “T18” Desired Rail Pressure • Refer to Table B-02 Data List “T19” Fuel Rail Pressure • Refer to Table B-02 Data List “T20” Rail Pressure Regulator • Refer to Table B-02 Data List “T21” Fuel Quantity • Refer to Table B-02 Data List “T22” SOI • Refer to Table B-02 Data List “T10” Coolant Temperature • Refer to Table B-22, Intake-Air System • Refer to Table B-02 Data List “T09” Engine Speed The check of the following system is only necessary, if the outside temperature is less than 0 °C (32 °F). • Refer to Table C-35, Filterheating Circuit

B-13, Complaint: Engine Performance

Customer complaint	Remedy
Reduced cut-off speed	The following tests must be performed in the given order: • Refer to Table B-02 Data List “T01” Battery Voltage • Refer to Table B-02 Data List “T04” PPS 1 • Refer to Table B-02 Data List “T05” PPS 2 • Refer to Table B-02 Data List “T10” Coolant Temperature • Refer to Table B-02 Data List “T11” Fuel Temperature • Refer to Table B-02 Data List “T12” Intake Air Temperature • Refer to Table B-22, Intake-Air System • Refer to Table B-21, Fuel System • Refer to Table B-02 Data List “T18” Desired Rail Pressure • Refer to Table B-02 Data List “T19” Fuel Rail Pressure • Refer to Table B-02 Data List “T20” Rail Pressure Regulator • Refer to Table B-02 Data List “T21” Fuel Quantity • Refer to Table B-02 Data List “T22” SOI • Refer to Table B-02 Data List “T09” Engine Speed The check of the following system is only necessary, if the outside temperature is less than 0 °C (32 °F). • Refer to Table C-35, Filterheating Circuit
Erratic engine operation, reproducible misfire	The following tests must be performed in the given order: • Refer to Table B-02 Data List “T01” Battery Voltage • Refer to Table B-02 Data List “T04” PPS 1 • Refer to Table B-02 Data List “T05” PPS 2 • Refer to Table B-06 Programming “T03” Replace Injector • Refer to Table B-21, Fuel System • Refer to Table B-02 Data List “T18” Desired Rail Pressure • Refer to Table B-02 Data List “T19” Fuel Rail Pressure • Refer to Table B-02 Data List “T20” Rail Pressure Regulator • Refer to Table B-02 Data List “T21” Fuel Quantity • Refer to Table B-02 Data List “T22” SOI • Refer to Table B-02 Data List “T11” Fuel Temperature • Refer to Table B-02 Data List “T12” Intake Air Temperature • Refer to Table B-02 Data List “T14” Barometric Pressure/Barometric Sensor Voltage • Refer to Table B-22, Intake-Air System The check of the following system is only necessary, if the outside temperature is less than 0 °C (32 °F). • Refer to Table B-04 Actuator Test “T03” Glow Time Relay Test • Refer to Table C-35, Filterheating Circuit

Customer complaint	Remedy
Poor engine response	The following tests must be performed in the given order: • Refer to Table B-02 Data List “T01” Battery Voltage • Refer to Table B-06 Programming “T03” Replace Injector • Refer to Table B-21, Fuel System • Refer to Table B-02 Data List “T10” Coolant Temperature • Refer to Table B-02 Data List “T11” Fuel Temperature • Refer to Table B-02 Data List “T12” Intake Air Temperature • Refer to Table B-02 Data List “T14” Barometric Pressure/Barometric Sensor Voltage • Refer to Table B-22, Intake-Air System • Refer to Table B-02 Data List “T04” PPS 1 • Refer to Table B-02 Data List “T05” PPS 2 • Refer to Table B-02 Data List “T18” Desired Rail Pressure • Refer to Table B-02 Data List “T19” Fuel Rail Pressure • Refer to Table B-02 Data List “T20” Rail Pressure Regulator • Refer to Table B-02 Data List “T21” Fuel Quantity • Refer to Table B-02 Data List “T22” SOI The check of the following system is only necessary, if the outside temperature is less than 0 °C (32 °F). • Refer to Table C-35, Filterheating Circuit
Reduced engine performance in all operating conditions	The following tests must be performed in the given order: • Refer to Table B-02 Data List “T01” Battery Voltage • Refer to Table B-06 Programming “T03” Replace Injector • Refer to Table B-22, Intake-Air System • Refer to Table B-21, Fuel System • Refer to Table B-02 Data List “T04” PPS 1 • Refer to Table B-02 Data List “T05” PPS 2 • Refer to Table B-02 Data List “T10” Coolant Temperature • Refer to Table B-02 Data List “T11” Fuel Temperature • Refer to Table B-02 Data List “T12” Intake Air Temperature • Refer to Table B-02 Data List “T14” Barometric Pressure/Barometric Sensor Voltage • Refer to Table B-02 Data List “T18” Desired Rail Pressure • Refer to Table B-02 Data List “T19” Fuel Rail Pressure • Refer to Table B-02 Data List “T20” Rail Pressure Regulator • Refer to Table B-02 Data List “T21” Fuel Quantity • Refer to Table B-02 Data List “T22” SOI • Refer to Table B-02 Data List “T09” Engine Speed The check of the following system is only necessary, if the outside temperature is less than 0 °C (32 °F). • Refer to Table C-35, Filterheating Circuit

B-14, Complaint: Exhaust Gas

Customer complaint	Remedy
Excessive white smoke	The following tests must be performed in the given order: • Refer to Table B-02 Data List “T01” Battery Voltage • Refer to Table B-02 Data List “T21” Fuel Quantity • Refer to Table B-02 Data List “T22” SOI • Refer to Table B-21, Fuel System • Refer to Table B-02 Data List “T10” Coolant Temperature • Refer to Table B-02 Data List “T11” Fuel Temperature • Refer to Table B-02 Data List “T14” Barometric Pressure/Barometric Sensor Voltage • Refer to Table B-22, Intake-Air System The check of the following system is only necessary, if the outside temperature is less than 0 °C (32 °F). • Refer to Table B-04 Actuator Test “T03” Glow Plug Control Test • Refer to Table C-35, Filterheating Circuit
Excessive black/grey smoke	The following tests must be performed in the given order: • Check Engine Oil Level • Refer to Table B-02 Data List “T01” Battery Voltage • Refer to Table B-02 Data List “T10” Coolant Temperature • Refer to Table B-02 Data List “T11” Fuel Temperature • Refer to Table B-02 Data List “T12” Intake Air Temperature • Refer to Table B-02 Data List “T14” Barometric Pressure/Barometric Sensor Voltage • Refer to Table B-22, Intake-Air System • Refer to Table B-21, Fuel System • Refer to Table B-02 Data List “T21” Fuel Quantity • Refer to Table B-02 Data List “T22” SOI • Refer to Table B-02 Data List “T18” Desired Rail Pressure • Refer to Table B-02 Data List “T19” Fuel Rail Pressure • Refer to Table B-02 Data List “T20” Rail Pressure Regulator • Refer to Table B-02 Data List “T09” Engine Speed

Customer complaint	Remedy
Excessive blue smoke	Perform the following tests in the given order until a defect is found. The following tests must be performed in the given order: • Check Engine Oil Level • Refer to Table B-21, Fuel System • Refer to Table B-22, Intake-Air System • Refer to Table B-02 Data List “T10” Coolant Temperature • Refer to Table B-02 Data List “T11” Fuel Temperature • Refer to Table B-02 Data List “T12” Intake Air Temperature • Refer to Table B-02 Data List “T14” Barometric Pressure/Barometric Sensor Voltage • Refer to Table B-02 Data List “T18” Desired Rail Pressure • Refer to Table B-02 Data List “T19” Fuel Rail Pressure • Refer to Table B-02 Data List “T20” Rail Pressure Regulator • Refer to Table B-02 Data List “T21” Fuel Quantity • Refer to Table B-02 Data List “T22” SOI • Refer to Table B-02 Data List “T09” Engine Speed The check of the following system is only necessary, if the outside temperature is less than 0 °C (32 °F). • Refer to Table B-04 Actuator Test “T03” Glow Plug Control Test

B-15, Complaint: Oil/Coolant/Fuel-System

Customer complaint	Remedy
Engine overheated	The following tests must be performed in the given order: • Check the following system/signal for proper operation: Engine Cooling • Refer to Table B-04 Actuator Test “T04” Radiator Fan Test • Refer to Table B-21, Fuel System • Refer to Table B-02 Data List “T01” Battery Voltage • Refer to Table B-02 Data List “T10” Coolant Temperature • Refer to Table B-02 Data List “T11” Fuel Temperature • Refer to Table B-02 Data List “T14” Barometric Pressure/Barometric Sensor Voltage • Refer to Table B-22, Intake-Air System • Check Engine Oil Level • Refer to Table B-02 Data List “T21” Fuel Quantity • Refer to Table B-02 Data List “T22” SOI
Rising engine oil level	The following tests must be performed in the given order: • Check Engine Oil Level • Engine oil pressure • Refer to B-21, Fuel System • Refer to Table B-02 Data List “T21” Fuel Quantity
Leaks in fuel system	Perform the following test step: • Refer to B-21, Fuel System

B-16, Complaint: Engine Mechanic

Customer complaint	Remedy
Mechanical engine problem	The following tests must be performed in the given order: • Check Engine Oil Level • Engine oil pressure • Refer to B-21, Fuel System • Check compression • Engine valve gear

B-17, Check: Functionality of Adjacent Systems

Customer complaint	Remedy
Engine can not be switched off with the ignition lock	The following tests must be performed in the given order: • Refer to Table B-02 Data List “T01” Battery Voltage • Refer to Table B-21, Fuel System • Check Engine Oil Level
Speedometer display defective	The following tests must be performed in the given order: • Refer to Table B-02 Data List “T01” Battery Voltage • Refer to Table B-02 Data List “T29” Vehicle Speed
No speed signal recognized	The following tests must be performed in the given order: • Refer to Table B-02 Data List “T01” Battery Voltage • Refer to Table B-02 Data List “T09” Engine Speed
Glow time telltale defective	The following tests must be performed in the given order: • Refer to Table B-02 Data List “T01” Battery Voltage • Refer to Table B-04 Actuator Test “T07” Glow Indicator Lamp Test

B-18, Check: Intermittent Faults

Test	Work Order Description	Nominal Value
T01	Intermittent System Operation **NOTE:** **Refer to "Intermittent and Poor Connections Inspection" in Section 0A for farther details.** Preliminary diagnostic check (visual inspection) • Check all sensors, actuators and the wiring harness of the system for corrosion and damages. • Check all connectors of the system for corrosion and for damaged terminals. • Check all ground connections of the system for corrosion and damages • Check if the fault was recognized in an area of strong electromagnetic sources e.g. near radio stations Diagnostic Trouble Codes • Read and record trouble codes • Check for history trouble code. If a history trouble code is stored this may indicate the circuit which has the intermittent condition. History trouble code is leading to an intermittent problem. This trouble codes refer to a related functional group. To find the defective component the following test steps may be helpful. • Use the following table to obtain the concerned functional group and perform the following additional test steps, while performing the troubleshooting in the C-x tables. Refer to Table B-01, Diagnostic Trouble Code Move the related connectors, wiring harness and components in order to find the failure. Switch on all electric consumers by turns, because this can cause an electromagnetic interference in a circuit. Use the oscilloscope to observe the wiring harness for disturbances. Operate the system under different conditions over a considerable time. Snapshot function of the Scan tool • Select the snapshot function of the Scan Tool. Set the Scan Tool to trigger by Any DTC and try to recreate the conditions that may cause the trouble code to be set. Use the Scan tool application to analyse the related data list parameters. The disturbances in the signal can be observed at the trigger point where the trouble code is set.	

Test	Work Order Description	Nominal Value
T01	• Use the following table to obtain the concerned functional group and perform the following additional test steps, while performing the troubleshooting in the C-x tables. Refer to Table B-01, Diagnostic Trouble Code Refer to Table B-02, Data List Move the related connectors, wiring harness and components in order to find the failure. Switch on all electric consumers by turns, because this can cause an electromagnetic interference in a circuit. Use an oscilloscope to observe the wiring harness for disturbances. Operate the system under different conditions over a considerable time. Symptoms/Customer Complaints • Check if one of the symptoms in the following table match the previously recorded customer complaint and perform the following additional test steps, while performing the troubleshooting in the C-x tables. Refer to Table B-09, Symptom Chart/Customer Complaints Move the related connectors, wiring harness and components in order to find the failure. Switch on all electric consumers by turns, because this can cause an electromagnetic interference in a circuit. Use the oscilloscope to observe the wiring harness for disturbances. Operate the system under different conditions over a considerable time. After successful test/fault repair proceed to the next test step	
	Yes: –	No: –

B-19, Programming ECM

Test	Work Order Description	Nominal Value
T01	Programming	
	The following tests must be performed in the given order: • The following programing function has to be performed to program the fuel injector calibration code. – Refer to Table B-06 Programming “T03” Replace Injector • After programming successfully, check if the system malfunction is still present. • If the malfunction is still present, continue with the following tests: • With trouble code P0602 recognized: Refer to Table C-02, Control Unit Hard- and Software • After successful test/fault repair proceed to the next test step	
	Yes: –	No: –

B-20, Immobilizer Check

Test	Work Order Description	Nominal Value
T01	Programming	
	• Verify programming of the control unit: Refer to Table B-06 Programming “T01” Registration (Immobilizer System) • After successful test/fault repair proceed to the next test step	
	Yes: –	No: –

B-21, Fuel System

Test	Work Order Description	Nominal Value
T01	Check: Fuel Pipes and Fuel Filter	System okay?
	CAUTION: **The fuel system is very sensitive. Work should be done with high cleanliness and care. Air in the fuel system can cause damage to the high-pressure fuel pump. That's why the vehicle must never be driven till the fuel tank is empty.** • Check fuel tank for correct fuel sort content • The fuel reserve must be greater than 5 L • Check connected hoses and tubes for kinks, damage etc. • Check the correct fitting of the connections and sealing. (use only sealing, that is approved by the vehicle manufacturer) • Check fuel filter • Check for pressure decrease in the fuel supply section. (leakage, blockage) • Check for pressure decrease in the high pressure section. (leakage, blockage)	
	Yes: T02	No: C-42
T02	Check: Fault Location	
	• Perform quick check actuator test: Refer to Table B-04 Actuator Test “T01” Fuel Pump Relay Test • After successful test/fault repair proceed to the next test step	
	Yes: –	No: –

B-22, Intake-Air System

Test	Work Order Description	Nominal Value
T01	Preliminary Diagnostic Check (Visual Inspection)	
	• Verify mechanical system functions/components Intake system • Check intake system/charge air hoses for leaks (secondary air, porosity and blockages) • Check the hose clamps at the intake-air system/charge-air system for correct fitting. • Check connected hoses and tubes for kinks, damage etc. • Check air filter for fouling and correct mounting. • Check mass air flow sensor for fouling. • Verify mechanical system functions/components Exhaust-gas turbo charger Exhaust system	Test okay?
	Yes: T02	No: C-41
T02	Check: Fault Location	
	The following test steps must be performed in the given order. If a fault is found in one test step, the subsequent test steps can be skipped. • Perform quick check data list: Refer to Table B-02 Data List “T13” MAF/MAF Sensor Voltage • Perform quick check actuator test: Refer to Table B-04 Actuator Test “T02” EGR Solenoid Test • Perform quick check data list: Refer to Table B-02 Data List “T15” Turbo Pressure/Turbo Pressure Voltage • After successful test/fault repair proceed to the next test step	
	Yes: –	No: –

B-23, Check: Intake-Air System

Test	Work Order Description	Nominal Value
T01	Check: Function-Group Intake-Air System/Charge-Air System	
	Perform the following tests in the given order until a defect is found. • Perform the following quick checks: Refer to Table B-22, Intake-Air System • If no defect has been found in previous test steps: Refer to Table C-14, Mass or Volume Air Flow Circuit • After successful test/fault repair proceed to the next test step	
	Yes: –	No: –

B-24, Check: Intake-Air System/Charge-Air System

Test	Work Order Description	Nominal Value
T01	Check: Function-Group Intake-Air System/Charge-Air System	
	Perform the following tests in the given order until a defect is found. • Verify mechanical system functions/components Exhaust-gas turbo charger Exhaust system • Check air filter for fouling and correct mounting. • Check mass air flow sensor for fouling. • Check intake system/charge air hoses for leaks (secondary air, porosity and blockages) • Check connected hoses and tubes for kinks, damage etc. • Perform quick check data list: Refer to Table B-02 Data List “T14” Barometric Pressure/Barometric Sensor Voltage Refer to Table B-02 Data List “T15” Turbo Pressure/Turbo Pressure Voltage • If no defect has been found in previous test steps: Refer to Table C-12, Boost Pressure Sensor Circuit • After successful test/fault repair proceed to the next test step	
	Yes: –	No: –

B-25, Check: Charge-Air System

Test	Work Order Description	Nominal Value
T01	Check: Function-Group Charge-Air System	
	Perform the following tests in the given order until a defect is found. • Verify mechanical system functions/components Exhaust-gas turbo charger Exhaust system • Perform quick check data list: Refer to Table B-02 Data List “T14” Barometric Pressure/Barometric Sensor Voltage Refer to Table B-02 Data List “T15” Turbo Pressure/Turbo Pressure Voltage • If no defect has been found in previous test steps: Refer to Table C-12, Boost Pressure Sensor Circuit • After successful test/fault repair proceed to the next test step	
	Yes: –	No: –

B-26, Check: Distance Signal

Test	Work Order Description	Nominal Value
T01	Vehicle Speed Information Check	
	Perform the following tests in the given order until a defect is found. • Connect scan tool, select concerned Electronic System, establish communication and verify, that the correct control unit is installed: Refer to Table B-03, Connect Scan Tool and Establish Communication • Read and record diagnostic trouble codes • If a trouble code is stored: Refer to Table B-01, Diagnostic Trouble Code • Perform quick check data list: Refer to Table B-02 Data List “T29” Vehicle Speed • If no defect has been found in previous test steps: Refer to Table C-40, Vehicle Speed Sensor Circuit • After successful test/fault repair proceed to the next test step	
	Yes: –	No: –

B-27, Check: Pressure Sensor Signal

Test	Work Order Description	Nominal Value
T01	Check: Datalist Parameter	
	Perform the following tests in the given order until a defect is found. • Perform quick check data list: Refer to Table B-02 Data List “T14” Barometric Pressure/Barometric Sensor Voltage Refer to Table B-02 Data List “T15” Turbo Pressure/Turbo Pressure Voltage • If no defect has been found in previous test steps: Refer to Table C-12, Boost Pressure Sensor Circuit • After successful test/fault repair proceed to the next test step	
	Yes: –	No: –

B-28, Complaint: Engine Temperature

Test	Work Order Description	Nominal Value
T01	Check: Adjacent System	
	• Check the following system for proper operation: Engine cooling system Fuel cooling system	System okay?
	Yes: T02	No: C-42
T02	Check: Datalist Parameter	
	The following test steps must be performed in the given order. If a fault is found in one test step, the subsequent test steps can be skipped. • Perform quick check data list: Refer to Table B-02 Data List “T10” Coolant Temperature Refer to Table B-02 Data List “T11” Fuel Temperature • If no defect has been found in previous test steps: Refer to Table C-47, System Status Information • After successful test/fault repair proceed to the next test step	
	Yes: –	No: –

B-29, Check: High Pressure Area

Test	Work Order Description	Nominal Value
T01	Preliminary Diagnostic Check (Visual Inspection)	System okay?
	CAUTION: **The fuel system is very sensitive. Work should be done with high cleanliness and care. Air in the fuel system can cause damage to the high-pressure fuel pump. That's why the vehicle must never be driven till the fuel tank is empty.** • Check fuel tank for correct fuel sort content The fuel reserve must be greater than 5 L • Check connected hoses and tubes for kinks, damage etc. • Check the correct fitting of the connections and sealing. (use only sealing, that is approved by the vehicle manufacturer) • Check for pressure decrease in the high pressure section. (leakage, blockage) • Perform a visual check of the following components: High-pressure fuel pump Common Rail Fuel Pressure Sensor Fuel Pressure Regulator Injector - Cylinder 1 Injector - Cylinder 2 Injector - Cylinder 3 Injector - Cylinder 4	
	Yes: T02	No: C-45
T02	Check: Mechanics and/or Hydraulics	Test okay?
	• Check injector **NOTE:** **Refer to “Precautions” under “Fuel Delivery System” in Section 6E3 before servicing fuel system.**	
	Yes: –	No: C-45

B-30, Check: Low and High Pressure Section

Test	Work Order Description	Nominal Value
T01	Preliminary Diagnostic Check (Visual Inspection)	System okay?
	CAUTION: **The fuel system is very sensitive. Work should be done with high cleanliness and care. Air in the fuel system can cause damage to the high-pressure fuel pump. That's why the vehicle must never be driven till the fuel tank is empty.** • Check fuel tank for correct fuel sort content The fuel reserve must be greater than 5 L • Check connected hoses and tubes for kinks, damage etc. • Check the correct fitting of the connections and sealing. (use only sealing, that is approved by the vehicle manufacturer) • Check fuel filter • Check for pressure decrease in the fuel supply section. (leakage, blockage) • Check for pressure decrease in the high pressure section. (leakage, blockage)	
	Yes: T02	No: C-44
T02	Actuator Test	
	• Perform quick check actuator test: Refer to Table B-04 Actuator Test “T01” Fuel Pump Relay Test • After successful test/fault repair proceed to the next test step	
	Yes: T03	No: –
T03	Check: Mechanics and/or Hydraulics	Test okay?
	• Check injector **NOTE:** **Refer to “Precautions” under “Fuel Delivery System” in Section 6E3 before servicing fuel system.**	
	Yes: –	No: C-44

B-31, Check: Low Pressure Section

Test	Work Order Description	Nominal Value
T01	Preliminary Diagnostic Check (Visual Inspection)	
	CAUTION: **The fuel system is very sensitive. Work should be done with high cleanliness and care. Air in the fuel system can cause damage to the high-pressure fuel pump. That's why the vehicle must never be driven till the fuel tank is empty.** • Check fuel tank for correct fuel sort content The fuel reserve must be greater than 5 L • Check connected hoses and tubes for kinks, damage etc. • Check fuel filter • Check for pressure decrease in the fuel supply section. (leakage, blockage)	System okay?
	Yes: T02	No: C-43
T02	Actuator Test	
	• Perform quick check actuator test: Refer to Table B-04 Actuator Test “T01” Fuel Pump Relay Test • After successful test/fault repair proceed to the next test step	
	Yes: –	No: –

B-32, Trouble Codes: Check 1

Test	Work Order Description	Nominal Value
T01	Check: Function-Group High Pressure Area	
	Perform the following tests in the given order until a defect is found. • Perform the following quick checks: Refer to Table B-29, Check: High Pressure Area Refer to Table B-31, Check: Low Pressure Section • If no defect has been found in previous test steps: Refer to Table C-45, Function-Group High Pressure Area • After successful test/fault repair proceed to the next test step	
	Yes: –	No: –

B-33, Trouble Codes: Check 2

Test	Work Order Description	Nominal Value
T01	Check: Fuel Pipes and Fuel Filter	
	Perform the following tests in the given order until a defect is found. • Perform the following quick checks: Refer to Table B-31, Check: Low Pressure Section • If no defect has been found in previous test steps: Refer to Table C-43, Function-Group Low Pressure Section • After successful test/fault repair proceed to the next test step	
	Yes: –	No: –

B-34, Trouble Codes: Check 3

Test	Work Order Description	Nominal Value
T01	Check: Diagnostic Trouble Code stored	
	• Is the trouble code P0201 stored?	
	Yes: C-24	No: T02
T02	Check: Diagnostic Trouble Code stored	
	• Is the trouble code P0202 stored?	
	Yes: C-25	No: T03
T03	Check: Diagnostic Trouble Code stored	
	• Is the trouble code P0203 stored?	
	Yes: C-26	No: T04
T04	Check: Diagnostic Trouble Code stored	
	• Is the trouble code P0204 stored?	
	Yes: C-27	No: T05
T05	Check: Function-Group High Pressure Area	
	Perform the following tests in the given order until a defect is found. • Perform the following quick checks: Refer to Table B-30, Check: Low and High Pressure Section • If no defect has been found in previous test steps: Refer to Table C-44, Function-Group Low and High Pressure Section • After successful test/fault repair proceed to the next test step	
	Yes: –	No: –

B-35, Trouble Codes: Check 4

Test	Work Order Description	Nominal Value
T01	Check: Fault Location	
	Perform the following tests in the given order until a defect is found. • Perform quick check actuator test: Refer to Table B-04 Actuator Test “T01” Fuel Pump Relay Test • If no defect has been found in previous test steps: Refer to Table C-42, Function-Group Fuel System • After successful test/fault repair proceed to the next test step	
	Yes: –	No: –

B-36, Trouble Codes: Check 5

Test	Work Order Description	Nominal Value
T01	Preliminary Diagnostic Check (Visual Inspection)	
	Perform the following tests in the given order until a defect is found. • Perform the following quick checks: Refer to Table B-22, Intake-Air System • If no defect has been found in previous test steps: Refer to Table C-28, Exhaust Gas Recirculation Valve Circuit • After successful test/fault repair proceed to the next test step	
	Yes: –	No: –

C-01, No Communication between Scan Tool and Control Unit

Test Table (For RM413D)

Test	Work Order Description	Nominal Value
T01	Check: Interruption of Voltage Supply Circuit	
	• Ignition OFF • All consumers turned off • Measure voltage between the following terminals: Data Link Connector – Wiring harness connector (wiring harness side) terminal G56-16 & Ground	greater than 11 V
	Yes: T02	No: T18
T02	Check: Short to Ground/Interruption of Voltage Supply Circuit	
	• Disconnect wiring harness connector from: ECM (Wiring Harness Connector E27) • Measure voltage between the following terminals: ECM – Wiring harness connector (wiring harness side) terminal E27-50 & Ground	greater than 11 V
	Yes: T03	No: E16
T03	Check: Short to Ground/Interruption of Voltage Supply Circuit	
	• Ignition ON • Measure voltage between the following terminals: ECM – Wiring harness connector (wiring harness side) terminal E27-23 & Ground	greater than 11 V
	Yes: T04	No: T06
T04	Check: Interruption of Signal Circuit	
	• Ignition OFF • Disconnect wiring harness connector from: Immobilizer Control Module • Measure resistance between the following terminals: Immobilizer Control Module – Wiring harness connector (wiring harness side) terminal G50-7 & ECM – Wiring harness connector (wiring harness side) terminal E27-88	less than 5 Ohm
	Yes: T05	No: E03
T05	Check: Circuit Interruption of Ground Circuit	
	• Measure resistance between the following terminals: Data Link Connector – Wiring harness connector (wiring harness side) terminal G56-4 & Ground	less than 5 Ohm
	Yes: E01	No: E02

Test	Work Order Description	Nominal Value
T06	Check: Short to Ground/Interruption of Voltage Supply Circuit	
	• Remove electrical component from socket: Circuit Fuse • Check the following component for proper operation: Circuit Fuse	Test okay?
	Yes: T07	No: T16
T07	Check: Interruption of Voltage Supply Circuit	
	• Measure voltage between the following terminals: Circuit Fuse – Input contact & Ground	greater than 11 V
	Yes: E04	No: T08
T08	Check: Short to Ground/Interruption of Voltage Supply Circuit	
	• Ignition OFF • Disconnect wiring harness connector from: Ignition Switch • Measure voltage between the following terminals: Ignition Switch – Wiring harness connector (wiring harness side) terminal G05-5 & Ground	greater than 11 V
	Yes: E05	No: T09
T09	Check: Short to Ground/Interruption of Voltage Supply Circuit	
	• Remove electrical component from socket: Circuit Main Fuse • Check the following component for proper operation: Circuit Main Fuse	Test okay?
	Yes: T10	No: T11
T10	Check: Interruption of Voltage Supply Circuit	
	• Measure voltage between the following terminals: Circuit Main Fuse – Input contact & Ground	greater than 11 V
	Yes: E06	No: E07
T11	Check: Short to Ground of Voltage Supply Circuit	
	• Connect fused jumper wire to: Circuit Main Fuse – Output contact & Battery voltage • Check the following component for proper operation: Fuse of the fused jumper wire	Test okay?
	Yes: T12	No: E13

Test	Work Order Description	Nominal Value
T12	Check: Short to Ground of Voltage Supply Circuit	
	• Remove fused jumper wire • Connect fused jumper wire to: Ignition Switch – Wiring harness connector (wiring harness side) terminal G05-4 & Battery voltage • Check the following component for proper operation: Fuse of the fused jumper wire	Test okay?
	Yes: T13	No: E12
T13	Check: Short to Ground of Voltage Supply Circuit	
	• Remove fused jumper wire • Connect fused jumper wire to: Ignition Switch – Wiring harness connector (wiring harness side) terminal G05-2 & Battery voltage • Check the following component for proper operation: Fuse of the fused jumper wire	Test okay?
	Yes: T14	No: E11
T14	Check: Short to Ground of Voltage Supply Circuit	
	• Remove fused jumper wire • Connect fused jumper wire to: Ignition Switch – Wiring harness connector (wiring harness side) terminal G05-1 & Battery voltage • Check the following component for proper operation: Fuse of the fused jumper wire	Test okay?
	Yes: T15	No: E10
T15	Check: Component	
	• Remove fused jumper wire • Disconnect wiring harness connector from: Starting Motor – Wiring harness connector (wiring harness side) wiring colour C46-1 • Connect fused jumper wire to: Ignition Switch – Wiring harness connector (wiring harness side) terminal G05-3 & Battery voltage • Check the following component for proper operation: Fuse of the fused jumper wire	Test okay?
	Yes: E08	No: E09

Test	Work Order Description	Nominal Value
T16	Check: Component	
	• Connect fused jumper wire to: Circuit Fuse – Output contact & Battery voltage • Check the following component for proper operation: Fuse of the fused jumper wire	Test okay?
	Yes: E01	No: T17
T17	Check: Short to Ground of Voltage Supply Circuit	
	• Disconnect wiring harness connector from: Glow Controller • Insert new fuse into the socket of the fused jumper wire and then check this fuse for proper operation. • Disconnect each of the following components/control units from the wiring harness consecutively and check the fuse of the fused jumper wire for proper operation each time: – ECM – Immobilizer Control Module – Clutch Switch – MAF and IAT Sensor – Fuel Heating Relay – Compressor Relay – Fuel Pump Relay – Radiator Fan Relay No.1, No.2, No.3	Test okay?
	Yes: E14	No: E15
T18	Check: Short to Ground/Interruption of Voltage Supply Circuit	
	• Remove electrical component from socket: Circuit Fuse • Check the following component for proper operation: Circuit Fuse	Test okay?
	Yes: T19	No: T25
T19	Check: Interruption of Voltage Supply Circuit	
	• Measure voltage between the following terminals: Circuit Fuse – Input contact & Ground	greater than 11 V
	Yes: E17	No: T20
T20	Check: Interruption of Voltage Supply Circuit	
	• Remove electrical component from socket: Circuit Main Fuse • Check the following component for proper operation: Circuit Main Fuse	Test okay?
	Yes: T21	No: T24
T21	Check: Interruption of Voltage Supply Circuit	
	• Measure voltage between the following terminals: Circuit Main Fuse – Input contact & Ground	greater than 11 V
	Yes: E18	No: T22

Test	Work Order Description	Nominal Value
T22	Check: Component	
	• Remove electrical component from socket: System Main Fuse • Check the following component for proper operation: System Main Fuse	Test okay?
	Yes: T23	No: E21
T23	Check: Interruption of Voltage Supply Circuit	
	• Measure voltage between the following terminals: System Main Fuse – Input contact & Ground	greater than 11 V
	Yes: E19	No: E20
T24	Check: Short to Ground of Voltage Supply Circuit	
	• Connect fused jumper wire to: Circuit Main Fuse – Output contact & Battery voltage • Check the following component for proper operation: Fuse of the fused jumper wire	Test okay?
	Yes: E18	No: E22
T25	Check: Component	
	• Connect fused jumper wire to: Circuit Fuse – Output contact & Battery voltage • Check the following component for proper operation: Fuse of the fused jumper wire	Test okay?
	Yes: E23	No: T26
T26	Check: Component	
	• Remove electrical component from socket: Radio • Insert new fuse into the socket of the fused jumper wire and then check this fuse for proper operation. • Disconnect each of the following components/control units from the wiring harness consecutively and check the fuse of the fused jumper wire for proper operation each time: ECM (Wiring Harness Connector E27) Combination Meter Interior light Information Display Clock	Test okay?
	Yes: E14	No: E24

Result Table (For RM413D)

Result	Cause Of Fault
E01	• Defective component: ECM **NOTE:** **If ECM is replaced, register vehicle specification into ECM by performing procedure described in "ECM registration" in Section 6E3.**
E02	• Circuit interruption between: Data Link Connector – Wiring harness connector (wiring harness side) terminal G56-4 & Ground
E03	• Circuit interruption between: ECM – Wiring harness connector (wiring harness side) terminal E27-88 & Immobilizer Control Module – Wiring harness connector (wiring harness side) terminal G50-7
E04	• Circuit interruption between: Circuit Fuse – Output contact & ECM – Wiring harness connector (wiring harness side) terminal E27-23
E05	• Circuit interruption between: Ignition Switch – Wiring harness connector (wiring harness side) terminal G05-2 & Circuit Fuse – Input contact or • Defective component: Ignition Switch
E06	• Circuit interruption between: Circuit Main Fuse – Output contact & Ignition Switch – Wiring harness connector (wiring harness side) terminal G05-5
E07	• Circuit interruption between: System Main Fuse – Output contact & Circuit Main Fuse – Input contact
E08	• Defective component: Ignition Switch or Starting Motor
E09	• Short circuit to ground between: Ignition Switch – Wiring harness connector (wiring harness side) terminal G05-3 & Starting Motor – Wiring harness connector (wiring harness side) terminal C46-1
E10	• Short circuit to ground between: Ignition Switch – Wiring harness connector (wiring harness side) terminal G05-1 & Circuit Fuses – Input contact

Result	Cause Of Fault
E11	• Short circuit to ground between: Ignition Switch – Wiring harness connector (wiring harness side) terminal G05-2 & Circuit Fuses – Input contact
E12	• Short circuit to ground between: Ignition Switch – Wiring harness connector (wiring harness side) terminal G05-4 & Circuit Fuses – Input contact
E13	• Short circuit to ground between: Circuit Main Fuse – Output contact & Ignition Switch – Wiring harness connector (wiring harness side) terminal G05-5
E14	• If the nominal value is reached during one of the measurements, the component/control unit that has been disconnected immediately before that measurement is defective. **NOTE:** **If ECM is replaced, register vehicle specification into ECM by performing procedure described in "ECM registration" in Section 6E3.**
E15	• Short circuit to ground between: Circuit Fuse – Output contact & ECM – Wiring harness connector (wiring harness side) terminal E27-23 & Wiring harness connector terminals of all components (wiring harness side), which were disconnected from the wiring harness during this trouble shooting session
E16	• Circuit interruption between: Circuit Fuse – Output contact & ECM – Wiring harness connector (wiring harness side) terminal E27-50
E17	• Circuit interruption between: Circuit Fuse – Output contact & Data Link Connector – Wiring harness connector (wiring harness side) terminal G56-16
E18	• Circuit interruption between: Circuit Main Fuse – Output contact & Circuit Fuse – Input contact
E19	• Circuit interruption between: System Main Fuse – Output contact & Circuit Main Fuse – Input contact
E20	• Circuit interruption between: Battery – Positive (+) terminal & System Main Fuse – Input contact or • Defective component: Battery

Result	Cause Of Fault
E21	• Short circuit to ground between: System Main Fuse – Output contact & Generator – Wiring harness connector (wiring harness side) terminal C47-1 & Circuit Main Fuses – Input contact or • Defective component: Generator
E22	• Short circuit to ground between: Circuit Main Fuse – Output contact & Circuit Fuses – Input contact
E23	• Defective component: Scan Tool
E24	• Short circuit to ground between: Circuit Fuse – Output contact & ECM – Wiring harness connector (wiring harness side) terminal E27-50 & Radio – Wiring harness connector (wiring harness side) terminal G28-8 & Clock – Wiring harness connector (wiring harness side) terminal G30-1 & Information Display – Wiring harness connector (wiring harness side) terminal G25-8 & Combination Meter – Wiring harness connector (wiring harness side) terminal G22-12 & Data Link Connector – Wiring harness connector (wiring harness side) terminal G56-16 & Interior Light – Wiring harness connector (Wiring harness side) terminal K02-2 & Interior Light – Wiring harness connector (Wiring harness side) terminal O01-2 or • Defective component: ECM **NOTE:** **If ECM is replaced, register vehicle specification into ECM by performing procedure described in “ECM registration” in Section 6E3.**

Test Table (For RB413D)

Test	Work Order Description	Nominal Value
T01	Check: Interruption of Voltage Supply Circuit	
	• Ignition OFF • All consumers turned off • Measure voltage between the following terminals: Data Link Connector – Wiring harness connector (wiring harness side) terminal G09-16 & Ground	greater than 11 V
	Yes: T02	No: T18
T02	Check: Short to Ground/Interruption of Voltage Supply Circuit	
	• Disconnect wiring harness connector from: ECM (Wiring Harness Connector G88) • Measure voltage between the following terminals: ECM – Wiring harness connector (wiring harness side) terminal G88-50 & Ground	greater than 11 V
	Yes: T03	No: E16
T03	Check: Short to Ground/Interruption of Voltage Supply Circuit	
	• Ignition ON • Measure voltage between the following terminals: ECM – Wiring harness connector (wiring harness side) terminal G88-23 & Ground	greater than 11 V
	Yes: T04	No: T06
T04	Check: Interruption of Signal Circuit	
	• Ignition OFF • Disconnect wiring harness connector from: Immobilizer Control Module • Measure resistance between the following terminals: Immobilizer Control Module – Wiring harness connector (wiring harness side) terminal G17-7 & ECM – Wiring harness connector (wiring harness side) terminal G88-88	less than 5 Ohm
	Yes: T05	No: E03
T05	Check: Circuit Interruption of Ground Circuit	
	• Measure resistance between the following terminals: Data Link Connector – Wiring harness connector (wiring harness side) terminal G09-4 & Ground	less than 5 Ohm
	Yes: E01	No: E02
T06	Check: Short to Ground/Interruption of Voltage Supply Circuit	
	• Remove electrical component from socket: Circuit Fuse • Check the following component for proper operation: Circuit Fuse	Test okay?
	Yes: T07	No: T16

Test	Work Order Description	Nominal Value
T07	Check: Interruption of Voltage Supply Circuit	
	• Measure voltage between the following terminals: Circuit Fuse – Input contact & Ground	greater than 11 V
	Yes: E04	No: T08
T08	Check: Short to Ground/Interruption of Voltage Supply Circuit	
	• Ignition OFF • Disconnect wiring harness connector from: Ignition Switch • Measure voltage between the following terminals: Ignition Switch – Wiring harness connector (wiring harness side) terminal G24-5 & Ground	greater than 11 V
	Yes: E05	No: T09
T09	Check: Short to Ground/Interruption of Voltage Supply Circuit	
	• Remove electrical component from socket: Circuit Main Fuse • Check the following component for proper operation: Circuit Main Fuse	Test okay?
	Yes: T10	No: T11
T10	Check: Interruption of Voltage Supply Circuit	
	• Measure voltage between the following terminals: Circuit Main Fuse – Input contact & Ground	greater than 11 V
	Yes: E06	No: E07
T11	Check: Short to Ground of Voltage Supply Circuit	
	• Connect fused jumper wire to: Circuit Main Fuse – Output contact & Battery voltage • Check the following component for proper operation: Fuse of the fused jumper wire	Test okay?
	Yes: T12	No: E13
T12	Check: Short to Ground of Voltage Supply Circuit	
	• Remove fused jumper wire • Connect fused jumper wire to: Ignition Switch – Wiring harness connector (wiring harness side) terminal G24-4 & Battery voltage • Check the following component for proper operation: Fuse of the fused jumper wire	Test okay?
	Yes: T13	No: E12

Test	Work Order Description	Nominal Value
T13	Check: Short to Ground of Voltage Supply Circuit	
	• Remove fused jumper wire • Connect fused jumper wire to: Ignition Switch – Wiring harness connector (wiring harness side) terminal G24-2 & Battery voltage • Check the following component for proper operation: Fuse of the fused jumper wire	Test okay?
	Yes: T14	No: E11
T14	Check: Short to Ground of Voltage Supply Circuit	
	• Remove fused jumper wire • Connect fused jumper wire to: Ignition Switch – Wiring harness connector (wiring harness side) terminal G24-1 & Battery voltage • Check the following component for proper operation: Fuse of the fused jumper wire	Test okay?
	Yes: T15	No: E10
T15	Check: Component	
	• Remove fused jumper wire • Disconnect wiring harness connector from: Starting Motor – Wiring harness connector (wiring harness side) wiring colour C06-1 • Connect fused jumper wire to: Ignition Switch – Wiring harness connector (wiring harness side) terminal G24-3 & Battery voltage • Check the following component for proper operation: Fuse of the fused jumper wire	Test okay?
	Yes: E08	No: E09
T16	Check: Component	
	• Connect fused jumper wire to: Circuit Fuse – Output contact & Battery voltage • Check the following component for proper operation: Fuse of the fused jumper wire	Test okay?
	Yes: E01	No: T17

Test	Work Order Description	Nominal Value
T17	Check: Short to Ground of Voltage Supply Circuit	
	• Disconnect wiring harness connector from: Glow Controller • Insert new fuse into the socket of the fused jumper wire and then check this fuse for proper operation. • Disconnect each of the following components/control units from the wiring harness consecutively and check the fuse of the fused jumper wire for proper operation each time: – ECM – Immobilizer Control Module – Clutch Switch – MAF and IAT Sensor – Fuel Heating Relay – Compressor Relay – Fuel Pump Relay	Test okay?
	Yes: E14	No: E15
T18	Check: Short to Ground/Interruption of Voltage Supply Circuit	
	• Remove electrical component from socket: Circuit Fuse • Check the following component for proper operation: Circuit Fuse	Test okay?
	Yes: T19	No: T25
T19	Check: Interruption of Voltage Supply Circuit	
	• Measure voltage between the following terminals: Circuit Fuse – Input contact & Ground	greater than 11 V
	Yes: E17	No: T20
T20	Check: Interruption of Voltage Supply Circuit	
	• Remove electrical component from socket: Circuit Main Fuse • Check the following component for proper operation: Circuit Main Fuse	Test okay?
	Yes: T21	No: T24
T21	Check: Interruption of Voltage Supply Circuit	
	• Measure voltage between the following terminals: Circuit Main Fuse – Input contact & Ground	greater than 11 V
	Yes: E18	No: T22
T22	Check: Component	
	• Remove electrical component from socket: System Main Fuse • Check the following component for proper operation: System Main Fuse	Test okay?
	Yes: T23	No: E21

Test	Work Order Description	Nominal Value
T23	Check: Interruption of Voltage Supply Circuit	
	• Measure voltage between the following terminals: System Main Fuse – Input contact & Ground	greater than 11 V
	Yes: E19	No: E20
T24	Check: Short to Ground of Voltage Supply Circuit	
	• Connect fused jumper wire to: Circuit Main Fuse – Output contact & Battery voltage • Check the following component for proper operation: Fuse of the fused jumper wire	Test okay?
	Yes: E18	No: E22
T25	Check: Component	
	• Connect fused jumper wire to: Circuit Fuse – Output contact & Battery voltage • Check the following component for proper operation: Fuse of the fused jumper wire	Test okay?
	Yes: E23	No: T26
T26	Check: Component	
	• Remove electrical component from socket: Radio • Insert new fuse into the socket of the fused jumper wire and then check this fuse for proper operation. • Disconnect each of the following components/control units from the wiring harness consecutively and check the fuse of the fused jumper wire for proper operation each time: – ECM (Wiring Harness Connector G88) – Combination Meter – Interior light – Clock	Test okay?
	Yes: E14	No: E24

Result Table (For RB413D)

Result	Cause Of Fault
E01	• Defective component: ECM **NOTE:** **If ECM is replaced, register vehicle specification into ECM by performing procedure described in "ECM registration" in Section 6E3.**
E02	• Circuit interruption between: Data Link Connector – Wiring harness connector (wiring harness side) terminal G09-4 & Ground
E03	• Circuit interruption between: ECM – Wiring harness connector (wiring harness side) terminal G88-88 & Immobilizer Control Module – Wiring harness connector (wiring harness side) terminal G17-7
E04	• Circuit interruption between: Circuit Fuse – Output contact & ECM – Wiring harness connector (wiring harness side) terminal G88-23
E05	• Circuit interruption between: Ignition Switch – Wiring harness connector (wiring harness side) terminal G24-2 & Circuit Fuse – Input contact or • Defective component: Ignition Switch
E06	• Circuit interruption between: Circuit Main Fuse – Output contact & Ignition Switch – Wiring harness connector (wiring harness side) terminal G05-5
E07	• Circuit interruption between: System Main Fuse – Output contact & Circuit Main Fuse – Input contact
E08	• Defective component: Ignition Switch or Starting Motor
E09	• Short circuit to ground between: Ignition Switch – Wiring harness connector (wiring harness side) terminal G24-3 & Starting Motor – Wiring harness connector (wiring harness side) terminal C06-1
E10	• Short circuit to ground between: Ignition Switch – Wiring harness connector (wiring harness side) terminal G24-1 & Circuit Fuses – Input contact

Result	Cause Of Fault
E11	• Short circuit to ground between: Ignition Switch – Wiring harness connector (wiring harness side) terminal G24-2 & Circuit Fuses – Input contact
E12	• Short circuit to ground between: Ignition Switch – Wiring harness connector (wiring harness side) terminal G24-4 & Circuit Fuses – Input contact
E13	• Short circuit to ground between: Circuit Main Fuse – Output contact & Ignition Switch – Wiring harness connector (wiring harness side) terminal G24-5
E14	• If the nominal value is reached during one of the measurements, the component/control unit that has been disconnected immediately before that measurement is defective. **NOTE:** **If ECM is replaced, register vehicle specification into ECM by performing procedure described in "ECM registration" in Section 6E3.**
E15	• Short circuit to ground between: Circuit Fuse – Output contact & ECM – Wiring harness connector (wiring harness side) terminal G88-23 & Wiring harness connector terminals of all components (wiring harness side), which were disconnected from the wiring harness during this trouble shooting session
E16	• Circuit interruption between: Circuit Fuse – Output contact & ECM – Wiring harness connector (wiring harness side) terminal G88-50
E17	• Circuit interruption between: Circuit Fuse – Output contact & Data Link Connector – Wiring harness connector (wiring harness side) terminal G09-16
E18	• Circuit interruption between: Circuit Main Fuse – Output contact & Circuit Fuse – Input contact
E19	• Circuit interruption between: System Main Fuse – Output contact & Circuit Main Fuse – Input contact
E20	• Circuit interruption between: Battery – Positive (+) terminal & System Main Fuse – Input contact or • Defective component: Battery

Result	Cause Of Fault
E21	• Short circuit to ground between: System Main Fuse – Output contact & Generator – Wiring harness connector (wiring harness side) terminal C08-1 & Circuit Main Fuses – Input contact or • Defective component: Generator
E22	• Short circuit to ground between: Circuit Main Fuse – Output contact & Circuit Fuses – Input contact
E23	• Defective component: Scan Tool
E24	• Short circuit to ground between: Circuit Fuse – Output contact & ECM – Wiring harness connector (wiring harness side) terminal G88-50 & Radio – Wiring harness connector (wiring harness side) terminal G64-4 & Clock – Wiring harness connector (wiring harness side) terminal G29-1 & Combination Meter – Wiring harness connector (wiring harness side) terminal G25-32 & Data Link Connector – Wiring harness connector (wiring harness side) terminal G09-16 & Interior Light – Wiring harness connector (Wiring harness side) terminal K02-2 & Interior Light – Wiring harness connector (Wiring harness side) terminal K06-1 or • Defective component: ECM **NOTE:** **If ECM is replaced, register vehicle specification into ECM by performing procedure described in "ECM registration" in Section 6E3.**

C-02, Control Unit Hard- and Software

Test Table

Test	Work Order Description	Nominal Value
T01	Result: High Transition Resistance	Test okay?
	• Check the following circuit for proper operation: Ground connection of the control unit case	
	Yes: T02	No: E03
T02	Check: Programming	Programming okay?
	• Ignition ON • Repeat programming	
	Yes: E01	No: E02

Result table

Result	Cause Of Fault
E01	• Previous programming was faulty
E02	• Defective component: ECM **NOTE:** **If ECM is replaced, register vehicle specification into ECM by performing procedure described in "ECM registration" in Section 6E3.**
E03	• Following system/component is faulty: Ground connection of the control unit case

C-03, System Voltage Circuit

Test Table (For RM413D)

Test	Work Order Description	Nominal Value
T01	Check: Short to Ground/Interruption of Voltage Supply Circuit	
	• Engine running • Increase engine speed to 3000 rpm • Measure voltage between the following terminals: Battery – Positive (+) terminal & Ground	13 ... 15 V
	Yes: T02	No: E05
T02	Check: Short to Ground/Interruption of Voltage Supply Circuit	
	• Ignition OFF • Measure voltage between the following terminals: Battery – Positive (+) terminal & Ground	greater than 11 V
	Yes: T03	No: E04
T03	Check Short to Ground/Interruption of Voltage Supply Circuit	
	• Disconnect wiring harness connector from: ECM • Measure voltage between the following terminals: ECM – Wiring harness connector (wiring harness side) terminal E27-50 & Ground	greater than 11 V
	Yes: T04	No: E06
T04	Check: Transition Resistance of Voltage Supply Circuit	
	• All consumers turned off • Disconnect wiring harness connector from: ECM • Ignition ON • Connect test lamp (10 W) and multimeter in parallel and measure voltage between the following terminals: ECM – Wiring harness connector (wiring harness side) terminal E27-50 & Ground	greater than 11 V
	Yes: T04	No: E03
T05	Check: Transition Resistance of Voltage Supply Circuit	
	• Connect test lamp (10 W) and multimeter in parallel and measure voltage between the following terminals: Battery Positive (+) terminal & ECM – Wiring harness connector (wiring harness side) terminal E27-1, E27-2, E27-3	greater than 11 V
	Yes: E01	No: E02

Result Table (For RM413D)

Result	Cause Of Fault
E01	• Defective component: ECM **NOTE:** **If ECM is replaced, register vehicle specification into ECM by performing procedure described in "ECM registration" in Section 6E3.**
E02	• High transition resistance between: Ground & ECM – Wiring harness connector (wiring harness side) terminal E27-1, E27-2, E27-3
E03	• High transition resistance between: Battery – Positive (+) terminal & ECM – Wiring harness connector (wiring harness side) terminal E27-50
E04	• Check the following component for proper operation: Battery and/or Generator and/or Starting Motor and/or • Check the following circuit for proper operation: Terminal C47-1, C59-1 and system main fuse
E05	• Defective component: Generator
E06	• Short circuit to ground between: Circuit Fuse – Output contact & ECM – Wiring harness connector (wiring harness side) terminal E27-50 & Brake Light Switch – Wiring harness connector (wiring harness side) terminal E36-1, E36-4 • Circuit interruption between: Circuit Fuse – Output contact & ECM – Wiring harness connector (wiring harness side) terminal E27-50 or Defective component: Brake Light Switch

Test Table (For RB413D)

Test	Work Order Description	Nominal Value
T01	Check: Short to Ground/Interruption of Voltage Supply Circuit	
	• Engine running • Increase engine speed to 3000 rpm • Measure voltage between the following terminals: Battery – Positive (+) terminal & Ground	13 ... 15 V
	Yes: T02	No: E05
T02	Check: Short to Ground/Interruption of Voltage Supply Circuit	
	• Ignition OFF • Measure voltage between the following terminals: Battery – Positive (+) terminal & Ground	greater than 11 V
	Yes: T03	No: E04
T03	Check: Transition Resistance of Voltage Supply Circuit	
	• All consumers turned off • Disconnect wiring harness connector from: ECM • Ignition ON • Connect test lamp (10 W) and multimeter in parallel and measure voltage between the following terminals: ECM – Wiring harness connector (wiring harness side) terminal G88-50 & Ground	greater than 11 V
	Yes: T04	No: E03
T04	Check: Transition Resistance of Voltage Supply Circuit	
	• Connect test lamp (10 W) and multimeter in parallel and measure voltage between the following terminals: Battery Positive (+) terminal & ECM – Wiring harness connector (wiring harness side) terminal G88-1, G88-2, G88-3	greater than 11 V
	Yes: E01	No: E02

Result Table (For RB413D)

Result	Cause Of Fault
E01	• Defective component: ECM **NOTE:** **If ECM is replaced, register vehicle specification into ECM by performing procedure described in "ECM registration" in Section 6E3.**
E02	• High transition resistance between: Ground & ECM – Wiring harness connector (wiring harness side) terminal G88-1, G88-2, G88-3
E03	• High transition resistance between: Battery – Positive (+) terminal & ECM – Wiring harness connector (wiring harness side) terminal E27-50
E04	• Check the following component for proper operation: Battery and/or Generator and/or Starting Motor and/or • Check the following circuit for proper operation: Terminal C02-1, C08-1 and system main fuse
E05	• Defective component: Generator

C-04, Control Unit Main Relay Circuit

Test Table (For RM413D)

Test	Work Order Description	Nominal Value
T01	Check: Short to Ground/Interruption of Voltage Supply Circuit	
	• Ignition OFF • Remove electrical component from socket: Main Relay • Measure voltage between the following terminals: Main Relay – Socket Terminal E58-2 & Ground	greater than 11 V
	Yes: T02	No: T12
T02	Check: Interruption of Voltage Supply Circuit	
	• Measure voltage between the following terminals: Main Relay – Socket Terminal E58-1 & Ground	greater than 11 V
	Yes: T03	No: E10
T03	Check: Short to Voltage of Voltage Supply Circuit	
	• Disconnect wiring harness connector from: ECM • Ignition ON • Measure voltage between the following terminals: Main Relay – Socket Terminal E58-4 & Ground	less than 0.3 V
	Yes: T04	No: T11
T04	Check: Short to Voltage of Signal Circuit	
	• Measure voltage between the following terminals: Main Relay – Socket Terminal E58-3 & Ground	less than 0.3 V
	Yes: T05	No: E07
T05	Check: Interruption of Voltage Supply Circuit	
	• Ignition OFF • Connect fused jumper wire to: Main Relay – Socket Terminal E58-4 & Battery positive (+) terminal • Measure voltage between the following terminals: ECM – Wiring harness connector (wiring harness side) terminal E27-6 & Ground	greater than 11 V
	Yes: T06	No: E06

Test	Work Order Description	Nominal Value
T06	Check: Interruption of Voltage Supply Circuit	
	• Measure voltage between the following terminals: ECM – Wiring harness connector (wiring harness side) terminal E27-4 & Ground	greater than 11 V
	Yes: T07	No: E05
T07	Check: Interruption of Voltage Supply Circuit	
	• Measure voltage between the following terminals: ECM – Wiring harness connector (wiring harness side) terminal E27-5 & Ground	greater than 11 V
	Yes: T08	No: T19
T08	Check: Interruption of Voltage Supply Circuit	
	• Measure voltage between the following terminals: ECM – Wiring harness connector (wiring harness side) terminal C66-5 & Ground	greater than 11 V
	Yes: T09	No: E04
T09	Check: Component	
	• Remove fused jumper wire • Insert electrical component in socket: Main Relay • Measure voltage between the following terminals: ECM – Wiring harness connector (wiring harness side) terminal E27-80 & Ground	greater than 11 V
	Yes: T10	No: E03
T10	Check: Component	
	• Connect fused jumper wire to: ECM – Wiring harness connector (wiring harness side) terminal E27-80 & Ground • Measure voltage between the following terminals: ECM – Wiring harness connector (wiring harness side) terminal E27-5 & Ground	greater than 11 V
	Yes: E01	No: E02
T11	Check: Short to Voltage of Voltage Supply Circuit	
	• Remove electrical component from socket: Circuit Fuse • Measure voltage between the following terminals: Main Relay – Socket Terminal E58-4 & Ground	less than 0.3 V
	Yes: E08	No: E09

Test	Work Order Description	Nominal Value
T12	Check: Short to Ground/Interruption of Voltage Supply Circuit	
	• Remove electrical component from socket: Circuit Main Fuse • Check the following component for proper operation: Circuit Main Fuse	Test okay?
	Yes: T12	No: T14
T13	Check: Interruption of Voltage Supply Circuit	
	• Measure voltage between the following terminals: Circuit Main Fuse – Input contact & Ground	greater than 11 V
	Yes: E11	No: T13
T14	Check: Short to Ground/Interruption of Voltage Supply Circuit	
	• Remove electrical component from socket: System Main Fuse • Check the following component for proper operation: System Main Fuse	Test okay?
	Yes: E12	No: E13
T15	Check: Short to Ground of Voltage Supply Circuit	
	• Connect fused jumper wire to: Circuit Main Fuse – Output contact & Battery voltage • Check the following component for proper operation: Fuse of the fused jumper wire	Test okay?
	Yes: T15	No: T17
T16	Check: Short to Ground of Voltage Supply Circuit	
	• Remove fused jumper wire • Connect fused jumper wire to: Main Relay – Socket Terminal E58-3 & Battery voltage • Check the following component for proper operation: Fuse of the fused jumper wire	Test okay?
	Yes: E02	No: T16
T17	Check: Short to Ground of Voltage Supply Circuit	
	• Disconnect wiring harness connector from: ECM • Insert new fuse into the socket of the fused jumper wire and then check this fuse for proper operation.	Test okay?
	Yes: E01	No: E14
T18	Check: Short to Ground of Voltage Supply Circuit	
	• Remove electrical component from socket: Fuel pump relay • Insert new fuse into the socket of the fused jumper wire and then check this fuse for proper operation.	Test okay?
	Yes: E15	No: E16

Test	Work Order Description	Nominal Value
T19	Check: Short to Ground/Interruption of Voltage Supply Circuit	
	• Remove electrical component from socket: Circuit Fuse • Check the following component for proper operation: Circuit Fuse	Test okay?
	Yes: T20	No: T21
T20	Check: Interruption of Voltage Supply Circuit	
	• Measure voltage between the following terminals: Circuit Fuse – Input contact & Ground	greater than 11 V
	Yes: E17	No: E18
T21	Check: Short to Ground of Voltage Supply Circuit	
	• Remove fused jumper wire • Disconnect wiring harness connector from: EGR Valve • Measure resistance between the following terminals: ECM – Wiring harness connector (wiring harness side) terminal E27-5 & Ground	greater than 500 kOhm
	Yes: T22	No: E19
T22	Check: Component	
	• Connect wiring harness connector to: EGR Valve • Connect fused jumper wire to: Circuit Fuse – Output contact & Battery positive (+) terminal • Check the following component for proper operation Fuse of the fused jumper wire	Test okay?
	Yes: E01	No: E20

Result Table (For RM413D)

Result	Cause Of Fault
E01	• Defective component: ECM **NOTE:** **If ECM is replaced, register vehicle specification into ECM by performing procedure described in "ECM registration" in Section 6E3.**
E02	• Defective component: Main Relay
E03	• Short circuit to ground/interruption of circuit between: Main Relay – Socket Terminal E58-3 & ECM – Wiring harness connector (wiring harness side) terminal E27-80 or • Defective component: Main Relay
E04	• Circuit interruption between: Main Relay – Socket Terminal E58-4 & ECM – harness connector (wiring harness side) terminal C66-5
E05	• Circuit interruption between: Main Relay – Socket Terminal E58-4 & ECM – Wiring harness connector (wiring harness side) terminal E27-4
E06	• Circuit interruption between: Main Relay – Socket Terminal E58-4 & ECM – Wiring harness connector (wiring harness side) terminal E27-6
E07	• Short circuit to voltage between: Main Relay – Socket Terminal E58-3 & ECM – Wiring harness connector (wiring harness side) terminal E27-80
E08	• Short circuit to voltage between: Circuit Fuse – Output contact & EGR Valve – Wiring harness connector (wiring harness side) terminal C70-1 & ECM – Wiring harness connector (wiring harness side) terminal E27-5, C66-5 or • Defective component: EGR Valve
E09	• Short circuit to voltage between: Circuit Fuse – Input contact & ECM – Wiring harness connector (wiring harness side) terminal E27-4, E27-6
E10	• Circuit interruption between: Circuit Main Fuse – Output contact & Main Relay – Socket Terminal E58-1

Result	Cause Of Fault
E11	• Circuit interruption between: Circuit Main Fuse – Output contact & Main Relay – Socket Terminal E58-2
E12	• Defective component: Battery or • Circuit interruption between: Battery – Positive (+) terminal & System Main Fuse – Input contact
E13	• Defective component: Alternator or • Short circuit to ground between: System Main Fuse – Output contact & Alternator – Wiring harness connector (wiring harness side) terminal C47-1 & Circuit Main Fuses – Input contact
E14	• Short circuit to ground between: Main Relay – Socket Terminal E58-3 & ECM – Wiring harness connector (wiring harness side) terminal E27-80
E15	• Short circuit to ground between: Fuel Pump Relay – Socket terminal C53-4 & Fuel Pump and Gauge Unit – Wiring harness connector (Wiring harness side) terminal L71-3 or Defective component: Fuel Pump
E16	• Short circuit to ground between: Circuit Main Fuse – Output contact & Fuel Pump Relay – Socket terminal C53-3
E17	• Circuit interruption between: Main Relay – Socket terminal E58-4 & Circuit Fuse – Input contact
E18	• Circuit interruption between Circuit Fuse – Output contact & ECM – Wiring harness connector (wiring harness side) terminal E27-5
E19	• Short circuit to ground between: Circuit Fuse – Output contact & ECM – Wiring harness connector (wiring harness side) terminal E27-5, C66-5
E20	• Defective component: EGR Valve

Test Table (For RB413D)

Test	Work Order Description	Nominal Value
T01	Check: Short to Ground/Interruption of Voltage Supply Circuit	
	• Ignition OFF • Remove electrical component from socket: Main Relay • Measure voltage between the following terminals: Main Relay – Socket Terminal E75-2 & Ground	greater than 11 V
	Yes: T02	No: T12
T02	Check: Interruption of Voltage Supply Circuit	
	• Measure voltage between the following terminals: Main Relay – Socket Terminal E75-1 & Ground	greater than 11 V
	Yes: T03	No: E10
T03	Check: Short to Voltage of Voltage Supply Circuit	
	• Disconnect wiring harness connector from: ECM • Ignition ON • Measure voltage between the following terminals: Main Relay – Socket Terminal E75-4 & Ground	less than 0.3 V
	Yes: T04	No: T11
T04	Check: Short to Voltage of Signal Circuit	
	• Measure voltage between the following terminals: Main Relay – Socket Terminal E75-3 & Ground	less than 0.3 V
	Yes: T05	No: E07
T05	Check: Interruption of Voltage Supply Circuit	
	• Ignition OFF • Connect fused jumper wire to: Main Relay – Socket Terminal E75-4 & Battery positive (+) terminal • Measure voltage between the following terminals: ECM – Wiring harness connector (wiring harness side) terminal G88-6 & Ground	greater than 11 V
	Yes: T06	No: E06
T06	Check: Interruption of Voltage Supply Circuit	
	• Measure voltage between the following terminals: ECM – Wiring harness connector (wiring harness side) terminal G88-4 & Ground	greater than 11 V
	Yes: T07	No: E05

Test	Work Order Description	Nominal Value
T07	Check: Interruption of Voltage Supply Circuit	
	• Measure voltage between the following terminals: ECM – Wiring harness connector (wiring harness side) terminal G88-5 & Ground	greater than 11 V
	Yes: T08	No: T19
T08	Check: Interruption of Voltage Supply Circuit	
	• Measure voltage between the following terminals: ECM – Wiring harness connector (wiring harness side) terminal D26-5 & Ground	greater than 11 V
	Yes: T09	No: E04
T09	Check: Component	
	• Remove fused jumper wire • Insert electrical component in socket: Main Relay • Measure voltage between the following terminals: ECM – Wiring harness connector (wiring harness side) terminal G88-80 & Ground	greater than 11 V
	Yes: T10	No: E03
T10	Check: Component	
	• Connect fused jumper wire to: ECM – Wiring harness connector (wiring harness side) terminal G88-80 & Ground • Measure voltage between the following terminals: ECM – Wiring harness connector (wiring harness side) terminal G88-5 & Ground	greater than 11 V
	Yes: E01	No: E02
T11	Check: Short to Voltage of Voltage Supply Circuit	
	• Remove electrical component from socket: Circuit Fuse • Measure voltage between the following terminals: Main Relay – Socket Terminal E75-4 & Ground	less than 0.3 V
	Yes: E08	No: E09
T12	Check: Short to Ground/Interruption of Voltage Supply Circuit	
	• Remove electrical component from socket: Circuit Main Fuse • Check the following component for proper operation: Circuit Main Fuse	Test okay?
	Yes: T13	No: T15

Test	Work Order Description	Nominal Value
T13	Check: Interruption of Voltage Supply Circuit	
	• Measure voltage between the following terminals: Circuit Main Fuse – Input contact & Ground	greater than 11 V
	Yes: E11	No: T14
T14	Check: Short to Ground/Interruption of Voltage Supply Circuit	
	• Remove electrical component from socket: System Main Fuse • Check the following component for proper operation: System Main Fuse	Test okay?
	Yes: E12	No: E13
T15	Check: Short to Ground of Voltage Supply Circuit	
	• Connect fused jumper wire to: Circuit Main Fuse – Output contact & Battery voltage • Check the following component for proper operation: Fuse of the fused jumper wire	Test okay?
	Yes: T16	No: T18
T16	Check: Short to Ground of Voltage Supply Circuit	
	• Remove fused jumper wire • Connect fused jumper wire to: Main Relay – Socket Terminal E75-3 & Battery voltage • Check the following component for proper operation: Fuse of the fused jumper wire	Test okay?
	Yes: E02	No: T17
T17	Check: Short to Ground of Voltage Supply Circuit	
	• Disconnect wiring harness connector from: ECM • Insert new fuse into the socket of the fused jumper wire and then check this fuse for proper operation.	Test okay?
	Yes: E01	No: E14
T18	Check: Short to Ground of Voltage Supply Circuit	
	• Remove electrical component from socket: Fuel pump relay • Insert new fuse into the socket of the fused jumper wire and then check this fuse for proper operation.	Test okay?
	Yes: E15	No: E16
T19	Check: Short to Ground/Interruption of Voltage Supply Circuit	
	• Remove electrical component from socket: Circuit Fuse • Check the following component for proper operation: Circuit Fuse	Test okay?
	Yes: T20	No: T21

Test	Work Order Description	Nominal Value
T20	Check: Interruption of Voltage Supply Circuit	
	• Measure voltage between the following terminals: Circuit Fuse – Input contact & Ground	greater than 11 V
	Yes: E17	No: E18
T21	Check: Short to Ground of Voltage Supply Circuit	
	• Remove fused jumper wire • Disconnect wiring harness connector from: EGR Valve • Measure resistance between the following terminals: ECM – Wiring harness connector (wiring harness side) terminal G88-5 & Ground	greater than 500 kOhm
	Yes: T22	No: E19
T22	Check: Component	
	• Connect wiring harness connector to: EGR Valve • Connect fused jumper wire to: Circuit Fuse – Output contact & Battery positive (+) terminal • Check the following component for proper operation Fuse of the fused jumper wire	Test okay?
	Yes: E01	No: E20

Result Table (For RB413D)

Result	Cause Of Fault
E01	• Defective component: ECM **NOTE:** **If ECM is replaced, register vehicle specification into ECM by performing procedure described in "ECM registration" in Section 6E3.**
E02	• Defective component: Main Relay
E03	• Short circuit to ground/interruption of circuit between: Main Relay – Socket Terminal E75-3 & ECM – Wiring harness connector (wiring harness side) terminal G88-80 or • Defective component: Main Relay
E04	• Circuit interruption between: Main Relay – Socket Terminal E75-4 & ECM – harness connector (wiring harness side) terminal D26-5
E05	• Circuit interruption between: Main Relay – Socket Terminal E75-4 & ECM – Wiring harness connector (wiring harness side) terminal G88-4
E06	• Circuit interruption between: Main Relay – Socket Terminal E75-4 & ECM – Wiring harness connector (wiring harness side) terminal G88-6
E07	• Short circuit to voltage between: Main Relay – Socket Terminal E75-3 & ECM – Wiring harness connector (wiring harness side) terminal G88-80
E08	• Short circuit to voltage between: Circuit Fuse – Output contact & EGR Valve – Wiring harness connector (wiring harness side) terminal D31-6 & ECM – Wiring harness connector (wiring harness side) terminal G88-5, D26-5 or • Defective component: EGR Valve
E09	• Short circuit to voltage between: Circuit Fuse – Input contact & ECM – Wiring harness connector (wiring harness side) terminal G88-4, G88-6
E10	• Circuit interruption between: Circuit Main Fuse – Output contact & Main Relay – Socket Terminal E75-1

Result	Cause Of Fault
E11	• Circuit interruption between: Circuit Main Fuse – Output contact & Main Relay – Socket Terminal E75-2
E12	• Defective component: Battery or • Circuit interruption between: Battery – Positive (+) terminal & System Main Fuse – Input contact
E13	• Defective component: Alternator or • Short circuit to ground between: System Main Fuse – Output contact & Alternator – Wiring harness connector (wiring harness side) terminal C47-1 & Circuit Main Fuses – Input contact
E14	• Short circuit to ground between: Main Relay – Socket Terminal E75-3 & ECM – Wiring harness connector (wiring harness side) terminal G88-80
E15	• Short circuit to ground between: Fuel Pump Relay – Socket terminal E52-3 & Fuel Pump and Gauge Unit – Wiring harness connector (Wiring harness side) terminal R02-3 or Defective component: Fuel Pump
E16	• Short circuit to ground between: Circuit Main Fuse – Output contact & Fuel Pump Relay – Socket terminal E52-4
E17	• Circuit interruption between: Main Relay – Socket terminal E75-4 & Circuit Fuse – Input contact
E18	• Circuit interruption between Circuit Fuse – Output contact & ECM – Wiring harness connector (wiring harness side) terminal G88-5
E19	• Short circuit to ground between: Circuit Fuse – Output contact & ECM – Wiring harness connector (wiring harness side) terminal G88-5, D26-5
E20	• Defective component: EGR Valve.

C-05, Crankshaft Sensor Circuit

Test Table (For RM413D)

Test	Work Order Description	Nominal Value
T01	Check: Short to Voltage/Ground/Interruption of Signal Circuit	
	• Ignition OFF • Disconnect wiring harness connector from: Crankshaft Position Sensor • Ignition ON • Measure voltage between the following terminals: Crankshaft Position Sensor – Wiring harness connector (wiring harness side) terminal C78-1 & Ground	1.2 ... 1.8 V
	Yes: T02	No: E05
T02	Check: Interruption of Voltage Supply Circuit	
	• Measure voltage between the following terminals: Crankshaft Position Sensor – Wiring harness connector (wiring harness side) terminal C78-2 & Ground	2.2 ... 2.8 V
	Yes: T03	No: E04
T03	Check: Adjustment	
	• Check the following system for proper operation: Crankshaft Position Sensor (intermittent problems, missing teeth, wrong reference point, incorrect gap position, etc.)	Test okay?
	Yes: T04	No: E03
T04	Check: Component	
	• Connect wiring harness connector to: Crankshaft Position Sensor • Disconnect wiring harness connector from: ECM • Switch multimeter to alternating-current voltage measurement. • Measure voltage between the following terminals: ECM – Wiring harness connector (wiring harness side) terminal C66-43 & ECM – Wiring harness connector (wiring harness side) terminal C66-59 • Engine cranking	greater than 0.2 V Alternating-current voltage
	Yes: E01	No: E02

Result Table (For RM413D)

Result	Cause Of Fault
E01	• Defective component: ECM **NOTE:** **If ECM is replaced, register vehicle specification into ECM by performing procedure described in "ECM registration" in Section 6E3.**
E02	• Defective component: Crankshaft Position Sensor
E03	• Refer to "Crankshaft position (CKP) sensor (engine speed sensor) inspection" in Section 6E3.
E04	• Short to voltage/ground/interruption of circuit between: Crankshaft Position Sensor – Wiring harness connector (wiring harness side) terminal C78-2 & ECM – Wiring harness connector (wiring harness side) terminal C66-59 or • Defective component: ECM **NOTE:** **If ECM is replaced, register vehicle specification into ECM by performing procedure described in "ECM registration" in Section 6E3.**
E05	• Short to voltage/ground/interruption of circuit between: Crankshaft Position Sensor – Wiring harness connector (wiring harness side) terminal C78-1 & ECM – Wiring harness connector (wiring harness side) terminal C66-43 or • Defective component: ECM **NOTE:** **If ECM is replaced, register vehicle specification into ECM by performing procedure described in "ECM registration" in Section 6E3.**

Test Table (For RB413D)

Test	Work Order Description	Nominal Value
T01	Check: Short to Voltage/Ground/Interruption of Signal Circuit	
	• Ignition OFF • Disconnect wiring harness connector from: Crankshaft Position Sensor • Ignition ON • Measure voltage between the following terminals: Crankshaft Position Sensor – Wiring harness connector (wiring harness side) terminal D45-1 & Ground	1.2 ... 1.8 V
	Yes: T02	No: E05
T02	Check: Interruption of Voltage Supply Circuit	
	• Measure voltage between the following terminals: Crankshaft Position Sensor – Wiring harness connector (wiring harness side) terminal D45-2 & Ground	2.2 ... 2.8 V
	Yes: T03	No: E04
T03	Check: Adjustment	
	• Check the following system for proper operation: Crankshaft Position Sensor (intermittent problems, missing teeth, wrong reference point, incorrect gap position, etc.)	Test okay?
	Yes: T04	No: E03
T04	Check: Component	
	• Connect wiring harness connector to: Crankshaft Position Sensor • Disconnect wiring harness connector from: ECM • Switch multimeter to alternating-current voltage measurement. • Measure voltage between the following terminals: ECM – Wiring harness connector (wiring harness side) terminal D26-43 & ECM – Wiring harness connector (wiring harness side) terminal D26-59 • Engine cranking	greater than 0.2 V Alternating-current voltage
	Yes: E01	No: E02

Result Table (For RB413D)

Result	Cause Of Fault
E01	• Defective component: ECM **NOTE:** **If ECM is replaced, register vehicle specification into ECM by performing procedure described in "ECM registration" in Section 6E3.**
E02	• Defective component: Crankshaft Position Sensor
E03	• Refer to "Crankshaft position (CKP) sensor (engine speed sensor) inspection".
E04	• Short to voltage/ground/interruption of circuit between: Crankshaft Position Sensor – Wiring harness connector (wiring harness side) terminal D45-2 & ECM – Wiring harness connector (wiring harness side) terminal D26-59 or • Defective component: ECM **NOTE:** **If ECM is replaced, register vehicle specification into ECM by performing procedure described in "ECM registration" in Section 6E3.**
E05	• Short to voltage/ground/interruption of circuit between: Crankshaft Position Sensor – Wiring harness connector (wiring harness side) terminal D45-1 & ECM – Wiring harness connector (wiring harness side) terminal D26-43 or • Defective component: ECM **NOTE:** **If ECM is replaced, register vehicle specification into ECM by performing procedure described in "ECM registration" in Section 6E3.**

C-06, Fuel Pump Relay Circuit

Test Table (For RM413D)

Test	Work Order Description	Nominal Value
T01	Check: Interruption of Signal Circuit	
	• Remove electrical component from socket: Fuel Pump Relay • Ignition ON • Measure voltage between the following terminals: Fuel Pump Relay – Socket terminal C53-2 & Ground	greater than 11 V
	Yes: T02	No: E11
T02	Check: Interruption of Voltage Supply Circuit	
	• Measure voltage between the following terminals: Fuel Pump Relay – Socket terminal C53-3 & Ground	greater than 11 V
	Yes: T03	No: E10
T03	Check: Short to Voltage/Ground/Interruption of Signal Circuit	
	• Ignition OFF Disconnect wiring harness connector from: ECM (Wiring Harness Connector E27) • Ignition ON • Measure voltage between the following terminals: ECM – Wiring harness connector (wiring harness side) terminal E27-75 & Ground	less than 0.3 V
	Yes: T04	No: E09
T04	Check: Short to Ground/Interruption of Signal Circuit	
	• Ignition OFF • Measure resistance between the following terminals: ECM – Wiring harness connector (wiring harness side) terminal E27-75 & Ground	greater than 500 kOhm
	Yes: T05	No: E08
T05	Check: Interruption of Signal Circuit	
	• Measure resistance between the following terminals: ECM – Wiring harness connector (wiring harness side) terminal E27-75 & Fuel Pump Relay – Socket C53-1	less than 5 Ohm
	Yes: T06	No: E07
T06	Check: Short to Voltage of Ground Circuit	
	• Ignition ON • Measure voltage between the following terminals: Fuel Pump Relay – Socket terminal C53-4 & Ground	less than 0.3 V
	Yes: T07	No: E06

Test	Work Order Description	Nominal Value
T07	Check: Component	Is the fuel pump running?
	• Ignition OFF • Connect fused jumper wire to: Fuel Pump Relay – Socket terminal C53-3 & Fuel Pump Relay – Socket terminal C53-4	
	Yes: T08	No: T09
T08	Check: Component	Is the fuel pump running?
	• Insert electrical component in socket: Fuel Pump Relay • Ignition ON • Connect fused jumper wire to: ECM – Wiring harness connector (wiring harness side) terminal E27-75 & Ground	
	Yes: E01	No: E02
T09	Check: Interruption of Signal Circuit	greater than 11 V
	• Disconnect wiring harness connector from: Fuel Pump • Measure voltage between the following terminals: Fuel Pump – Wiring harness connector (wiring harness side) terminal L71-3 & Ground	
	Yes: T10	No: E05
T10	Check: Circuit Interruption of Ground Circuit	less than 5 Ohm
	• Measure resistance between the following terminals: Fuel Pump – Wiring harness connector (wiring harness side) terminal L71-4 & Ground	
	Yes: E03	No: E04

Result Table (For RM413D)

Result	Cause Of Fault
E01	• Defective component: ECM **NOTE:** **If ECM is replaced, register vehicle specification into ECM by performing procedure described in "ECM registration" in Section 6E3.**
E02	• Defective component: Fuel Pump Relay
E03	• Defective component: Fuel Pump
E04	• Circuit interruption between: Fuel Pump – Wiring harness connector (wiring harness side) terminal L71-4 & Ground
E05	• Circuit interruption between: Fuel pump Relay – Socket terminal C53-4 & Fuel Pump – Wiring harness connector (wiring harness side) terminal L71-3
E06	• Short circuit to voltage between: Fuel Pump Relay – Socket terminal C53-4 & Fuel Pump – Wiring harness connector (wiring harness side) terminal L71-3 or • Defective component: Fuel Pump
E07	• Circuit interruption between: ECM – Wiring harness connector (wiring harness side) terminal E27-75 & Fuel Pump Relay – Socket terminal C53-1
E08	• Short circuit to ground between: ECM – Wiring harness connector (wiring harness side) terminal E27-75 & Fuel Pump Relay – Socket terminal C53-1
E09	• Short circuit to voltage between: ECM – Wiring harness connector (wiring harness side) terminal E27-75 & Fuel Pump Relay – Socket terminal C53-1
E10	• Circuit interruption between: Circuit Main Fuse – Output contact & Fuel Pump Relay – Socket terminal C53-3
E11	• Circuit interruption between: Circuit Fuse – Output contact & Fuel Pump Relay – Socket terminal C53-2

Test Table (For RB413D)

Test	Work Order Description	Nominal Value
T01	Check: Interruption of Signal Circuit	
	• Remove electrical component from socket: Fuel Pump Relay • Ignition ON • Measure voltage between the following terminals: Fuel Pump Relay – Socket terminal E52-2 & Ground	greater than 11 V
	Yes: T02	No: E11
T02	Check: Interruption of Voltage Supply Circuit	
	• Measure voltage between the following terminals: Fuel Pump Relay – Socket terminal E52-4 & Ground	greater than 11 V
	Yes: T03	No: E10
T03	Check: Short to Voltage/Ground/Interruption of Signal Circuit	
	• Ignition OFF Disconnect wiring harness connector from: ECM (Wiring Harness Connector G88) • Ignition ON • Measure voltage between the following terminals: ECM – Wiring harness connector (wiring harness side) terminal G88-75 & Ground	less than 0.3 V
	Yes: T04	No: E09
T04	Check: Short to Ground/Interruption of Signal Circuit	
	• Ignition OFF • Measure resistance between the following terminals: ECM – Wiring harness connector (wiring harness side) terminal G88-75 & Ground	greater than 500 kOhm
	Yes: T05	No: E08
T05	Check: Interruption of Signal Circuit	
	• Measure resistance between the following terminals: ECM – Wiring harness connector (wiring harness side) terminal G88-75 & Fuel Pump Relay – Socket E52-1	less than 5 Ohm
	Yes: T06	No: E07
T06	Check: Short to Voltage of Ground Circuit	
	• Ignition ON • Measure voltage between the following terminals: Fuel Pump Relay – Socket terminal E52-3 & Ground	less than 0.3 V
	Yes: T07	No: E06

Test	Work Order Description	Nominal Value
T07	Check: Component	
	• Ignition OFF • Connect fused jumper wire to: Fuel Pump Relay – Socket terminal E52-4 & Fuel Pump Relay – Socket terminal E52-3	Is the fuel pump running?
	Yes: T08	No: T09
T08	Check: Component	
	• Insert electrical component in socket: Fuel Pump Relay • Ignition ON • Connect fused jumper wire to: ECM – Wiring harness connector (wiring harness side) terminal G88-75 & Ground	Is the fuel pump running?
	Yes: E01	No: E02
T09	Check: Interruption of Signal Circuit	
	• Disconnect wiring harness connector from: Fuel Pump • Measure voltage between the following terminals: Fuel Pump – Wiring harness connector (wiring harness side) terminal R02-3 & Ground	greater than 11 V
	Yes: T10	No: E05
T10	Check: Circuit Interruption of Ground Circuit	
	• Measure resistance between the following terminals: Fuel Pump – Wiring harness connector (wiring harness side) terminal R02-4 & Ground	less than 5 Ohm
	Yes: E03	No: E04

Result Table (For RB413D)

Result	Cause Of Fault
E01	• Defective component: ECM **NOTE:** **If ECM is replaced, register vehicle specification into ECM by performing procedure described in "ECM registration in Section 6E3.**
E02	• Defective component: Fuel Pump Relay
E03	• Defective component: Fuel Pump
E04	• Circuit interruption between: Fuel Pump – Wiring harness connector (wiring harness side) terminal R02-4 & Ground
E05	• Circuit interruption between: Fuel pump Relay – Socket terminal E52-3 & Fuel Pump – Wiring harness connector (wiring harness side) terminal R02-3
E06	• Short circuit to voltage between: Fuel Pump Relay – Socket terminal E52-3 & Fuel Pump – Wiring harness connector (wiring harness side) terminal R02-3 or • Defective component: Fuel Pump
E07	• Circuit interruption between: ECM – Wiring harness connector (wiring harness side) terminal G88-75 & Fuel Pump Relay – Socket terminal E52-1
E08	• Short circuit to ground between: ECM – Wiring harness connector (wiring harness side) terminal G88-75 & Fuel Pump Relay – Socket terminal E52-1
E09	• Short circuit to voltage between: ECM – Wiring harness connector (wiring harness side) terminal G88-75 & Fuel Pump Relay – Socket terminal E52-1
E10	• Circuit interruption between: Circuit Main Fuse – Output contact & Fuel Pump Relay – Socket terminal E52-4
E11	• Circuit interruption between: Circuit Fuse – Output contact & Fuel Pump Relay – Socket terminal E52-2

C-07, 5V Circuit 1

Test Table (For RM413D)

Test	Work Order Description	Nominal Value
T01	Check: Short to Voltage/Ground/Interruption of Voltage Supply	
	• Ignition OFF • Disconnect wiring harness connector from: Boost Pressure Sensor • Ignition ON • Measure voltage between the following terminals: Boost Pressure Sensor – Wiring harness connector (wiring harness side) terminal C48-1 & Ground	4.8 ... 5.2 V
	Yes: T02	No: T03
T02	Check: Short to Voltage/Ground/Interruption of Voltage Supply	
	• Measure voltage between the following terminals: Boost Pressure Sensor – Wiring harness connector (wiring harness side) terminal C48-1 & Boost Pressure Sensor – Wiring harness connector (wiring harness side) terminal C48-2	4.8 ... 5.2 V
	Yes: E01	No: E02
T03	Check: Short to Voltage/Ground/Interruption of Voltage Supply	
	• Ignition OFF • Disconnect wiring harness connector from: Boost Pressure Sensor • Ignition ON • Measure voltage between the following terminals: Boost Pressure Sensor – Wiring harness connector (wiring harness side) terminal C48-1 & Ground	less than 4.8 V
	Yes: T04	No: T05
T04	Check: Short to Ground of Voltage Supply Circuit	
	• Ignition OFF • Disconnect wiring harness connector from: Fuel Pressure Sensor • Ignition ON • Measure voltage between: Boost Pressure Sensor – Wiring harness connector (wiring harness side) terminal C48-1 & Ground	greater than 4.8 V
	Yes: E03	No: E04

Test	Work Order Description	Nominal Value
T05	Check: Short to Voltage of Voltage Supply Circuit	
	• Ignition OFF • Disconnect wiring harness connector from: Fuel Pressure Sensor • Ignition ON • Measure voltage between: Boost Pressure Sensor – Wiring harness connector (wiring harness side) terminal C48-1 & Ground	less than 5.2 V
	Yes: E03	No: E05

Result Table (For RM413D)

Result	Cause Of Fault
E01	• Defective component: Boost Pressure Sensor
E02	• Short circuit to voltage/interruption of circuit between: Boost Pressure Sensor – Wiring harness connector (wiring harness side) terminal C48-2 & ECM – Wiring harness connector (wiring harness side) terminal C66-24 or • Defective component: ECM **NOTE:** **If ECM is replaced, register vehicle specification into ECM by performing procedure described in "ECM registration" in Section 6E3.**
E03	• Defective component: Fuel Pressure Sensor
E04	• Short circuit to ground/interruption of circuit between: Boost Pressure Sensor – Wiring harness connector (wiring harness side) terminal C48-1 & ECM – Wiring harness connector (wiring harness side) terminal C66-23 or Fuel Pressure Sensor – Wiring harness connector (wiring harness side) terminal C40-3 & ECM – Wiring harness connector (wiring harness side) terminal C66-8 or • Defective component: ECM **NOTE:** **If ECM is replaced, register vehicle specification into ECM by performing procedure described in "ECM registration" in Section 6E3.**
E05	• Short circuit to voltage between: Boost Pressure Sensor – Wiring harness connector (wiring harness side) terminal C48-1 & ECM – Wiring harness connector (wiring harness side) terminal C66-23 or Fuel Pressure Sensor – Wiring harness connector (wiring harness side) terminal C40-3 & ECM – Wiring harness connector (wiring harness side) terminal C66-8 or • Defective component: ECM **NOTE:** **If ECM is replaced, register vehicle specification into ECM by performing procedure described in "ECM registration" in Section 6E3.**

Test Table (For RB413D)

Test	Work Order Description	Nominal Value
T01	Check: Short to Voltage/Ground/Interruption of Voltage Supply	4.8 ... 5.2 V
	• Ignition OFF • Disconnect wiring harness connector from: Boost Pressure Sensor • Ignition ON • Measure voltage between the following terminals: Boost Pressure Sensor – Wiring harness connector (wiring harness side) terminal D29-3 & Ground	
	Yes: T02	No: T03
T02	Check: Short to Voltage/Ground/Interruption of Voltage Supply	4.8 ... 5.2 V
	• Measure voltage between the following terminals: Boost Pressure Sensor – Wiring harness connector (wiring harness side) terminal D29-3 & Boost Pressure Sensor – Wiring harness connector (wiring harness side) terminal D29-2	
	Yes: E01	No: E02
T03	Check: Short to Voltage/Ground/Interruption of Voltage Supply	less than 4.8 V
	• Ignition OFF • Disconnect wiring harness connector from: Boost Pressure Sensor • Ignition ON • Measure voltage between the following terminals: Boost Pressure Sensor – Wiring harness connector (wiring harness side) terminal D29-3 & Ground	
	Yes: T04	No: T05
T04	Check: Short to Ground of Voltage Supply Circuit	greater than 4.8 V
	• Ignition OFF • Disconnect wiring harness connector from: Fuel Pressure Sensor • Ignition ON • Measure voltage between: Boost Pressure Sensor – Wiring harness connector (wiring harness side) terminal D29-3 & Ground	
	Yes: E03	No: E04

Test	Work Order Description	Nominal Value
T05	Check: Short to Voltage of Voltage Supply Circuit	
	• Ignition OFF • Disconnect wiring harness connector from: Fuel Pressure Sensor • Ignition ON • Measure voltage between: Boost Pressure Sensor – Wiring harness connector (wiring harness side) terminal D29-3 & Ground	less than 5.2 V
	Yes: E03	No: E05

Result Table (For RB413D)

Result	Cause Of Fault
E01	• Defective component: Boost Pressure Sensor
E02	• Short circuit to voltage/interruption of circuit between: Boost Pressure Sensor – Wiring harness connector (wiring harness side) terminal D29-2 & ECM – Wiring harness connector (wiring harness side) terminal D26-24 or • Defective component: ECM **NOTE:** **If ECM is replaced, register vehicle specification into ECM by performing procedure described in "ECM registration" in Section 6E3.**
E03	• Defective component: Fuel Pressure Sensor
E04	• Short circuit to ground/interruption of circuit between: Boost Pressure Sensor – Wiring harness connector (wiring harness side) terminal D29-3 & ECM – Wiring harness connector (wiring harness side) terminal D26-23 or Fuel Pressure Sensor – Wiring harness connector (wiring harness side) terminal D28-1 & ECM – Wiring harness connector (wiring harness side) terminal D26-8 or • Defective component: ECM **NOTE:** **If ECM is replaced, register vehicle specification into ECM by performing procedure described in "ECM registration" in Section 6E3.**
E05	• Short circuit to voltage between: Boost Pressure Sensor – Wiring harness connector (wiring harness side) terminal D29-3 & ECM – Wiring harness connector (wiring harness side) terminal D26-23 or Fuel Pressure Sensor – Wiring harness connector (wiring harness side) terminal D28-1 & ECM – Wiring harness connector (wiring harness side) terminal D26-8 or • Defective component: ECM **NOTE:** **If ECM is replaced, register vehicle specification into ECM by performing procedure described in "ECM registration" in Section 6E3.**

C-08, 5V Circuit 2

Test Table (For RM413D)

Test	Work Order Description	Nominal Value
T01	Check: Short to Voltage/Interruption of Voltage Supply Circuit	
	• Ignition OFF • Disconnect wiring harness connector from: MAF and IAT Sensor • Ignition ON • Measure voltage between the following terminals: MAF and IAT Sensor – Wiring harness connector (wiring harness side) terminal C79-4 & Ground	4.8 ... 5.2 V
	Yes: E01	No: T02
T02	Check: Short to Voltage/Interruption of Voltage Supply Circuit	
	• Ignition OFF • Disconnect wiring harness connector from: MAF and IAT Sensor • Ignition ON • Measure voltage between the following terminals: MAF and IAT Sensor – Wiring harness connector (wiring harness side) terminal C79-4 & Ground	less than 4.8 V
	Yes: T03	No: T04
T03	Check: Short to Ground/Interruption of Voltage Supply Circuit	
	• Ignition OFF • Disconnect wiring harness connector from: Camshaft Position Sensor • Ignition ON • Measure voltage between the following terminals: MAF and IAT Sensor – Wiring harness connector (wiring harness side) terminal C79-4 & Ground • Disconnect each of the following components/control units consecutively from the wiring harness and repeat the measurement each time: Pedal Position Sensor	4.8 ... 5.2 V
	Yes: E02	No: E03

Test	Work Order Description	Nominal Value
T04	Check: Short to Voltage of Voltage Supply Circuit	
	• Ignition OFF • Disconnect wiring harness connector from: Camshaft Position Sensor • Ignition ON • Measure voltage between the following terminals: MAF and IAT Sensor – Wiring harness connector (wiring harness side) terminal C79-4 & Ground • Disconnect each of the following components/control units consecutively from the wiring harness and repeat the measurement each time: Pedal Position Sensor	4.8 ... 5.2 V
	Yes: E02	No: E04

Result Table (For RM413D)

Result	Cause Of Fault
E01	• Defective component: MAF and IAT Sensor
E02	• If the nominal value is reached during one of the measurements, the component/control unit that has been disconnected immediately before that measurement is defective.
E03	• Short circuit to ground/interruption of circuit between: MAF and IAT Sensor – Wiring harness connector (wiring harness side) terminal C79-4 & ECM – Wiring harness connector (wiring harness side) terminal C66-40 or Camshaft Position Sensor – Wiring harness connector (wiring harness side) terminal C69-3 & ECM – Wiring harness connector (wiring harness side) terminal C66-25 or Pedal Position Sensor – Wiring harness connector (wiring harness side) terminal E25-5 & ECM – Wiring harness connector (wiring harness side) terminal E27-83 or • Defective component: ECM **NOTE:** **If ECM is replaced, register vehicle specification into ECM by performing procedure described in "ECM registration" in Section 6E3.**
E04	• Short circuit to voltage between: MAF and IAT Sensor – Wiring harness connector (wiring harness side) terminal C79-4 & ECM – Wiring harness connector (wiring harness side) terminal C66-40 or Pedal Position Sensor – Wiring harness connector (wiring harness side) terminal E25-5 & ECM – Wiring harness connector (wiring harness side) terminal E27-83 or Camshaft Position Sensor – Wiring harness connector (wiring harness side) terminal C69-3 & ECM – Wiring harness connector (wiring harness side) terminal C66-25 or • Defective component: ECM **NOTE:** **If ECM is replaced, register vehicle specification into ECM by performing procedure described in "ECM registration" in Section 6E3.**

Test Table (For RB413D)

Test	Work Order Description	Nominal Value
T01	Check: Short to Voltage/Interruption of Voltage Supply Circuit	4.8 ... 5.2 V
	• Ignition OFF • Disconnect wiring harness connector from: MAF and IAT Sensor • Ignition ON • Measure voltage between the following terminals: MAF and IAT Sensor – Wiring harness connector (wiring harness side) terminal D42-4 & Ground	
	Yes: E01	No: T02
T02	Check: Short to Voltage/Interruption of Voltage Supply Circuit	less than 4.8 V
	• Ignition OFF • Disconnect wiring harness connector from: MAF and IAT Sensor • Ignition ON • Measure voltage between the following terminals: MAF and IAT Sensor – Wiring harness connector (wiring harness side) terminal D42-4 & Ground	
	Yes: T03	No: T04
T03	Check: Short to Ground/Interruption of Voltage Supply Circuit	4.8 ... 5.2 V
	• Ignition OFF • Disconnect wiring harness connector from: Camshaft Position Sensor • Ignition ON • Measure voltage between the following terminals: MAF and IAT Sensor – Wiring harness connector (wiring harness side) terminal D42-4 & Ground • Disconnect each of the following components/control units consecutively from the wiring harness and repeat the measurement each time: Pedal Position Sensor	
	Yes: E02	No: E03

Test	Work Order Description	Nominal Value
T04	Check: Short to Voltage of Voltage Supply Circuit	
	• Ignition OFF • Disconnect wiring harness connector from: Camshaft Position Sensor • Ignition ON • Measure voltage between the following terminals: MAF and IAT Sensor – Wiring harness connector (wiring harness side) terminal D42-4 & Ground • Disconnect each of the following components/control units consecutively from the wiring harness and repeat the measurement each time: Pedal Position Sensor	4.8 ... 5.2 V
	Yes: E02	No: E04

Result Table (For RB413D)

Result	Cause Of Fault
E01	• Defective component: MAF and IAT Sensor
E02	• If the nominal value is reached during one of the measurements, the component/control unit that has been disconnected immediately before that measurement is defective.
E03	• Short circuit to ground/interruption of circuit between: MAF and IAT Sensor – Wiring harness connector (wiring harness side) terminal D42-4 & ECM – Wiring harness connector (wiring harness side) terminal D26-40 or Camshaft Position Sensor – Wiring harness connector (wiring harness side) terminal D33-1 & ECM – Wiring harness connector (wiring harness side) terminal D26-25 or Pedal Position Sensor – Wiring harness connector (wiring harness side) terminal G82-5 & ECM – Wiring harness connector (wiring harness side) terminal G88-83 or • Defective component: ECM **NOTE:** **If ECM is replaced, register vehicle specification into ECM by performing procedure described in "ECM registration" in Section 6E3.**
E04	• Short circuit to voltage between: MAF and IAT Sensor – Wiring harness connector (wiring harness side) terminal D42-4 & ECM – Wiring harness connector (wiring harness side) terminal D26-40 or Pedal Position Sensor – Wiring harness connector (wiring harness side) terminal G82-5 & ECM – Wiring harness connector (wiring harness side) terminal G88-83 or Camshaft Position Sensor – Wiring harness connector (wiring harness side) terminal D33-1 & ECM – Wiring harness connector (wiring harness side) terminal D26-25 or • Defective component: ECM **NOTE:** **If ECM is replaced, register vehicle specification into ECM by performing procedure described in "ECM registration" in Section 6E3.**

C-09, 5V Circuit 3

Test Table (For RM413D)

Test	Work Order Description	Nominal Value
T01	Check: Short to Voltage/Ground/Interruption of Voltage Supply	
	• Ignition OFF • Disconnect wiring harness connector from: Pedal Position Sensor • Ignition ON • Measure voltage between the following terminals: Pedal Position Sensor – Wiring harness connector (wiring harness side) terminal E25-6 & Ground	4.8 ... 5.2 V
	Yes: T02	No: T03
T02	Check: Short to Voltage/Ground/Interruption of Voltage Supply	
	• Measure voltage between the following terminals: Pedal Position Sensor – Wiring harness connector (wiring harness side) terminal E25-6 & Pedal Position Sensor – Wiring harness connector (wiring harness side) terminal E25-2	4.8 ... 5.2 V
	Yes: E01	No: E02
T03	Check: Short to Voltage/Ground/Interruption of Voltage Supply	
	• Ignition OFF • Disconnect wiring harness connector from: Pedal Position Sensor • Ignition ON • Measure voltage between the following terminals: Pedal Position Sensor – Wiring harness connector (wiring harness side) terminal E25-6 & Ground	less than 4.8 V
	Yes: T04	No: T06
T04	Check: Vehicle Configuration	
	Is the following information correct for the actual vehicle? Air Conditioning	
	Yes: T05	No: E05
T05	Check: Short to Ground of Voltage Supply Circuit	
	• Ignition OFF • Disconnect wiring harness connector from: A/C Pressure Sensor • Ignition ON • Measure voltage between the following terminals: Pedal Position Sensor – Wiring harness connector (wiring harness side) terminal E25-6 & Ground	greater than 4.8 V
	Yes: E03	No: E04

Test	Work Order Description	Nominal Value
T06	Check: Vehicle Configuration	
	Is the following information correct for the actual vehicle? Air Conditioning	
	Yes: T07	No: E08
T07	Check: Short to Voltage of Voltage Supply Circuit	
	• Ignition OFF • Disconnect wiring harness connector from: A/C Pressure Sensor • Ignition ON • Measure voltage between the following terminals: Pedal Position Sensor – Wiring harness connector (wiring harness side) terminal E25-6 & Ground	less than 5.2 V
	Yes: E06	No: E07

Result Table (For RM413D)

Result	Cause Of Fault
E01	• Defective component: Pedal Position Sensor
E02	• Short to voltage/ground/interruption of circuit between: Pedal Position Sensor – Wiring harness connector (wiring harness side) terminal E25-2 & ECM – Wiring harness connector (wiring harness side) terminal E27-32 or • Defective component: ECM **NOTE:** **If ECM is replaced, register vehicle specification into ECM by performing procedure described in "ECM registration" in Section 6E3.**
E03	• Defective component: A/C Pressure Sensor
E04	• Short circuit to ground/interruption of circuit between: Pedal Position Sensor – Wiring harness connector (wiring harness side) terminal E25-6 & ECM – Wiring harness connector (wiring harness side) terminal E27-15 or A/C Pressure Sensor – Wiring harness connector (wiring harness side) terminal E26-1 & ECM – Wiring harness connector (wiring harness side) terminal E27-37 or • Defective component: ECM **NOTE:** **If ECM is replaced, register vehicle specification into ECM by performing procedure described in "ECM registration" in Section 6E3.**
E05	• Short circuit to ground/interruption of circuit between: Pedal Position Sensor – Wiring harness connector (wiring harness side) terminal E25-6 & ECM – Wiring harness connector (wiring harness side) terminal E27-15 or • Defective component: ECM **NOTE:** **If ECM is replaced, register vehicle specification into ECM by performing procedure described in "ECM registration" in Section 6E3.**
E06	• Defective component: A/C Pressure Sensor

Result	Cause Of Fault
E07	• Short circuit to voltage between: Pedal Position Sensor – Wiring harness connector (wiring harness side) terminal E25-6 & ECM – Wiring harness connector (wiring harness side) terminal E27-15 or A/C Pressure Sensor – Wiring harness connector (wiring harness side) terminal E26-1 & ECM – Wiring harness connector (wiring harness side) terminal E27-37 or • Defective component: ECM **NOTE:** **If ECM is replaced, register vehicle specification into ECM by performing procedure described in "ECM registration" in Section 6E3.**
E08	• Short circuit to voltage between: Pedal Position Sensor – Wiring harness connector (wiring harness side) terminal E25-6 & ECM – Wiring harness connector (wiring harness side) terminal E27-15 or • Defective component: ECM **NOTE:** **If ECM is replaced, register vehicle specification into ECM by performing procedure described in "ECM registration" in Section 6E3.**

Test Table (For RB413D)

Test	Work Order Description	Nominal Value
T01	Check: Short to Voltage/Ground/Interruption of Voltage Supply	
	• Ignition OFF • Disconnect wiring harness connector from: Pedal Position Sensor • Ignition ON • Measure voltage between the following terminals: Pedal Position Sensor – Wiring harness connector (wiring harness side) terminal G82-6 & Ground	4.8 ... 5.2 V
	Yes: T02	No: T03
T02	Check: Short to Voltage/Ground/Interruption of Voltage Supply	
	• Measure voltage between the following terminals: Pedal Position Sensor – Wiring harness connector (wiring harness side) terminal G82-6 & Pedal Position Sensor – Wiring harness connector (wiring harness side) terminal G82-2	4.8 ... 5.2 V
	Yes: E01	No: E02
T03	Check: Short to Voltage/Ground/Interruption of Voltage Supply	
	• Ignition OFF • Disconnect wiring harness connector from: Pedal Position Sensor • Ignition ON • Measure voltage between the following terminals: Pedal Position Sensor – Wiring harness connector (wiring harness side) terminal G82-6 & Ground	less than 4.8 V
	Yes: T04	No: T06
T04	Check: Vehicle Configuration	
	Is the following information correct for the actual vehicle? Air Conditioning	
	Yes: T05	No: E05
T05	Check: Short to Ground of Voltage Supply Circuit	
	• Ignition OFF • Disconnect wiring harness connector from: A/C Pressure Sensor • Ignition ON • Measure voltage between the following terminals: Pedal Position Sensor – Wiring harness connector (wiring harness side) terminal G82-6 & Ground	greater than 4.8 V
	Yes: E03	No: E04

Test	Work Order Description	Nominal Value
T06	Check: Vehicle Configuration	
	Is the following information correct for the actual vehicle? Air Conditioning	
	Yes: T07	No: E08
T07	Check: Short to Voltage of Voltage Supply Circuit	
	• Ignition OFF • Disconnect wiring harness connector from: A/C Pressure Sensor • Ignition ON • Measure voltage between the following terminals: Pedal Position Sensor – Wiring harness connector (wiring harness side) terminal G82-6 & Ground	less than 5.2 V
	Yes: E06	No: E07

Result Table (For RB413D)

Result	Cause Of Fault
E01	• Defective component: Pedal Position Sensor
E02	• Short to voltage/ground/interruption of circuit between: Pedal Position Sensor – Wiring harness connector (wiring harness side) terminal G82-2 & ECM – Wiring harness connector (wiring harness side) terminal G88-32 or • Defective component: ECM **NOTE:** **If ECM is replaced, register vehicle specification into ECM by performing procedure described in "ECM registration" in Section 6E3.**
E03	• Defective component: A/C Pressure Sensor
E04	• Short circuit to ground/interruption of circuit between: Pedal Position Sensor – Wiring harness connector (wiring harness side) terminal G82-6 & ECM – Wiring harness connector (wiring harness side) terminal G88-15 or A/C Pressure Sensor – Wiring harness connector (wiring harness side) terminal E66-1 & ECM – Wiring harness connector (wiring harness side) terminal G88-37 or • Defective component: ECM **NOTE:** **If ECM is replaced, register vehicle specification into ECM by performing procedure described in "ECM registration" in Section 6E3.**
E05	• Short circuit to ground/interruption of circuit between: Pedal Position Sensor – Wiring harness connector (wiring harness side) terminal G82-6 & ECM – Wiring harness connector (wiring harness side) terminal G88-15 or • Defective component: ECM **NOTE:** **If ECM is replaced, register vehicle specification into ECM by performing procedure described in "ECM registration" in Section 6E3.**
E06	• Defective component: A/C Pressure Sensor

Result	Cause Of Fault
E07	• Short circuit to voltage between: Pedal Position Sensor – Wiring harness connector (wiring harness side) terminal G82-6 & ECM – Wiring harness connector (wiring harness side) terminal G88-15 or A/C Pressure Sensor – Wiring harness connector (wiring harness side) terminal E66-1 & ECM – Wiring harness connector (wiring harness side) terminal G88-37 or • Defective component: ECM **NOTE:** **If ECM is replaced, register vehicle specification into ECM by performing procedure described in "ECM registration" in Section 6E3.**
E08	• Short circuit to voltage between: Pedal Position Sensor – Wiring harness connector (wiring harness side) terminal G82-6 & ECM – Wiring harness connector (wiring harness side) terminal G88-15 or • Defective component: ECM **NOTE:** **If ECM is replaced, register vehicle specification into ECM by performing procedure described in "ECM registration" in Section 6E3.**

C-10, Pedal Position Sensor Circuit

Test Table (For RM413D)

Test	Work Order Description	Nominal Value
T01	Check: Short to Voltage/Ground/Interruption of Voltage Supply	
	• Ignition OFF • Disconnect wiring harness connector from: Pedal Position Sensor • Ignition ON • Measure voltage between the following terminals: Pedal Position Sensor – Wiring harness connector (wiring harness side) terminal E25-5 & Ground	4.8 ... 5.2 V
	Yes: T02	No: T10
T02	Check: Circuit Interruption of Ground Circuit	
	• Measure voltage between the following terminals: Pedal Position Sensor – Wiring harness connector (wiring harness side) terminal E25-5 & Pedal Position Sensor – Wiring harness connector (wiring harness side) terminal E25-3	greater than 4.8 V
	Yes: T03	No: E09
T03	Check: Short to Voltage/Ground/Interruption of Signal Circuit	
	• Ignition OFF • Connect fused jumper wire to: Pedal Position Sensor – Wiring harness connector (wiring harness side) terminal E25-5 & Pedal Position Sensor – Wiring harness connector (wiring harness side) terminal E25-4 • Ignition ON • Scan Tool Data List Parameter PPS 1 (Pedal Position Sensor)	4.8 ... 5.2 V
	Yes: T04	No: T09
T04	Check: Short to Voltage of Signal Circuit	
	• Measure voltage between the following terminals: Pedal Position Sensor – Wiring harness connector (wiring harness side) terminal E25-6 & Ground	4.8 ... 5.2 V
	Yes: T05	No: T08
T05	Check: Short to Ground/Interruption of Signal Circuit	
	• Measure voltage between the following terminals: Pedal Position Sensor – Wiring harness connector (wiring harness side) terminal E25-6 & Pedal Position Sensor – Wiring harness connector (wiring harness side) terminal E25-2	4.8 ... 5.2 V
	Yes: T06	No: E04

Test	Work Order Description	Nominal Value
T06	Check: Short to Ground of Signal Circuit	2.4 ... 2.6 V
	• Ignition OFF • Connect fused jumper wire to: Pedal Position Sensor – Wiring harness connector (wiring harness side) terminal E25-6 & Pedal Position Sensor – Wiring harness connector (wiring harness side) terminal E25-1 • Ignition ON • Scan Tool Data List Parameter PPS 2 (Pedal Position Sensor)	
	Yes: E01	No: T07
T07	Check: Short to Ground of Signal Circuit	greater than 2.6 V
	• Ignition OFF • Connect fused jumper wire to: Pedal Position Sensor – Wiring harness connector (wiring harness side) terminal E25-6 & Pedal Position Sensor – Wiring harness connector (wiring harness side) terminal E25-1 • Ignition ON • Scan Tool Data List Parameter PPS 2 (Pedal Position Sensor)	
	Yes: E02	No: E03
T08	Check: Short to Voltage of Signal Circuit	greater than 5.2 V
	• Measure voltage between the following terminals: Pedal Position Sensor – Wiring harness connector (wiring harness side) terminal E25-6 & Ground	
	Yes: E05	No: E06
T09	Check: Short to Voltage/Ground/Interruption of Signal Circuit	greater than 5.2 V
	• Ignition OFF • Connect fused jumper wire to: Pedal Position Sensor – Wiring harness connector (wiring harness side) terminal E25-5 & Pedal Position Sensor – Wiring harness connector (wiring harness side) terminal E25-4 • Ignition ON • Scan Tool Data List Parameter PPS 1 (Pedal Position Sensor)	
	Yes: E07	No: E08

Test	Work Order Description	Nominal Value
T10	Check: Short to Voltage/Ground/Interruption of Voltage Supply	
	• Ignition OFF • Disconnect wiring harness connector from: Pedal Position Sensor • Ignition ON • Measure voltage between the following terminals: Pedal Position Sensor – Wiring harness connector (wiring harness side) terminal E25-5 & Ground	greater than 5.2 V
	Yes: E10	No: E11

Result Table (For RM413D)

Result	Cause Of Fault
E01	• Defective component: Pedal Position Sensor
E02	• Short circuit to voltage between: ECM – Wiring harness connector (wiring harness side) terminal E27-41 & Pedal Position Sensor – Wiring harness connector (wiring harness side) terminal E25-1
E03	• Short circuit to ground/interruption of circuit between: ECM – Wiring harness connector (wiring harness side) terminal E27-41 & Pedal Position Sensor – Wiring harness connector (wiring harness side) terminal E25-1 or • Defective component: ECM **NOTE:** **If ECM is replaced, register vehicle specification into ECM by performing procedure described in "ECM registration" in Section 6E3.**
E04	• Short circuit to ground/interruption of circuit between: ECM – Wiring harness connector (wiring harness side) terminal E27-32 & Pedal Position Sensor – Wiring harness connector (wiring harness side) terminal E25-2 or • Defective component: ECM **NOTE:** **If ECM is replaced, register vehicle specification into ECM by performing procedure described in "ECM registration" in Section 6E3.**
E05	• Short circuit to voltage between: ECM – Wiring harness connector (wiring harness side) terminal E27-15 & Pedal Position Sensor – Wiring harness connector (wiring harness side) terminal E25-6
E06	• Short circuit to ground/interruption of circuit between: ECM – Wiring harness connector (wiring harness side) terminal E27-15 & Pedal Position Sensor – Wiring harness connector (wiring harness side) terminal E25-6 or • Defective component: ECM **NOTE:** **If ECM is replaced, register vehicle specification into ECM by performing procedure described in "ECM registration" in Section 6E3.**

Result	Cause Of Fault
E07	• Short circuit to voltage between: ECM – Wiring harness connector (wiring harness side) terminal E27-65 & Pedal Position Sensor – Wiring harness connector (wiring harness side) terminal E25-4 or • Defective component: ECM **NOTE:** **If ECM is replaced, register vehicle specification into ECM by performing procedure described in "ECM registration" in Section 6E3.**
E08	• Circuit interruption between: ECM – Wiring harness connector (wiring harness side) terminal E27-65 & Pedal Position Sensor – Wiring harness connector (wiring harness side) terminal E25-4 or • Defective component: ECM **NOTE:** **If ECM is replaced, register vehicle specification into ECM by performing procedure described in "ECM registration" in Section 6E3.**
E09	• Circuit interruption between: Pedal Position Sensor – Wiring harness connector (wiring harness side) terminal E25-3 & ECM – Wiring harness connector (wiring harness side) terminal E27-35 or • Defective component: ECM **NOTE:** **If ECM is replaced, register vehicle specification into ECM by performing procedure described in "ECM registration" in Section 6E3.**
E10	• Short circuit to voltage between: ECM – Wiring harness connector (wiring harness side) terminal E27-83 & Pedal Position Sensor – Wiring harness connector (wiring harness side) terminal E25-5 or • Defective component: ECM **NOTE:** **If ECM is replaced, register vehicle specification into ECM by performing procedure described in "ECM registration" in Section 6E3.**

Result	Cause Of Fault
E11	• Short circuit to ground/interruption of circuit between: ECM – Wiring harness connector (wiring harness side) terminal E27-83 & Pedal Position Sensor – Wiring harness connector (wiring harness side) terminal E25-5 or • Defective component: ECM **NOTE:** **If ECM is replaced, register vehicle specification into ECM by performing procedure described in "ECM registration" in Section 6E3.**

Test Table (For RB413D)

Test	Work Order Description	Nominal Value
T01	Check: Short to Voltage/Ground/Interruption of Voltage Supply	
	• Ignition OFF • Disconnect wiring harness connector from: Pedal Position Sensor • Ignition ON • Measure voltage between the following terminals: Pedal Position Sensor – Wiring harness connector (wiring harness side) terminal G82-5 & Ground	4.8 ... 5.2 V
	Yes: T02	No: T10
T02	Check: Circuit Interruption of Ground Circuit	
	• Measure voltage between the following terminals: Pedal Position Sensor – Wiring harness connector (wiring harness side) terminal G82-5 & Pedal Position Sensor – Wiring harness connector (wiring harness side) terminal G82-3	greater than 4.8 V
	Yes: T03	No: E09
T03	Check: Short to Voltage/Ground/Interruption of Signal Circuit	
	• Ignition OFF • Connect fused jumper wire to: Pedal Position Sensor – Wiring harness connector (wiring harness side) terminal G82-5 & Pedal Position Sensor – Wiring harness connector (wiring harness side) terminal G82-4 • Ignition ON • Scan Tool Data List Parameter PPS 1 (Pedal Position Sensor)	4.8 ... 5.2 V
	Yes: T04	No: T09
T04	Check: Short to Voltage of Signal Circuit	
	• Measure voltage between the following terminals: Pedal Position Sensor – Wiring harness connector (wiring harness side) terminal G82-6 & Ground	4.8 ... 5.2 V
	Yes: T05	No: T08
T05	Check: Short to Ground/Interruption of Signal Circuit	
	• Measure voltage between the following terminals: Pedal Position Sensor – Wiring harness connector (wiring harness side) terminal G82-6 & Pedal Position Sensor – Wiring harness connector (wiring harness side) terminal G82-2	4.8 ... 5.2 V
	Yes: T06	No: E04

Test	Work Order Description	Nominal Value
T06	Check: Short to Ground of Signal Circuit	2.4 ... 2.6 V
	• Ignition OFF • Connect fused jumper wire to: Pedal Position Sensor – Wiring harness connector (wiring harness side) terminal G82-6 & Pedal Position Sensor – Wiring harness connector (wiring harness side) terminal G82-1 • Ignition ON • Scan Tool Data List Parameter PPS 2 (Pedal Position Sensor)	
	Yes: E01	No: T07
T07	Check: Short to Ground of Signal Circuit	greater than 2.6 V
	• Ignition OFF • Connect fused jumper wire to: Pedal Position Sensor – Wiring harness connector (wiring harness side) terminal G82-6 & Pedal Position Sensor – Wiring harness connector (wiring harness side) terminal G82-1 • Ignition ON • Scan Tool Data List Parameter PPS 2 (Pedal Position Sensor)	
	Yes: E02	No: E03
T08	Check: Short to Voltage of Signal Circuit	greater than 5.2 V
	• Measure voltage between the following terminals: Pedal Position Sensor – Wiring harness connector (wiring harness side) terminal G82-6 & Ground	
	Yes: E05	No: E06
T09	Check: Short to Voltage/Ground/Interruption of Signal Circuit	greater than 5.2 V
	• Ignition OFF • Connect fused jumper wire to: Pedal Position Sensor – Wiring harness connector (wiring harness side) terminal G82-5 & Pedal Position Sensor – Wiring harness connector (wiring harness side) terminal G82-4 • Ignition ON • Scan Tool Data List Parameter PPS 1 (Pedal Position Sensor)	
	Yes: E07	No: E08

Test	Work Order Description	Nominal Value
T10	Check: Short to Voltage/Ground/Interruption of Voltage Supply	
	• Ignition OFF • Disconnect wiring harness connector from: Pedal Position Sensor • Ignition ON • Measure voltage between the following terminals: Pedal Position Sensor – Wiring harness connector (wiring harness side) terminal G82-5 & Ground	greater than 5.2 V
	Yes: E10	No: E11

Result Table (For RB413D)

Result	Cause Of Fault
E01	• Defective component: Pedal Position Sensor
E02	• Short circuit to voltage between: ECM – Wiring harness connector (wiring harness side) terminal G88-41 & Pedal Position Sensor – Wiring harness connector (wiring harness side) terminal G82-1
E03	• Short circuit to ground/interruption of circuit between: ECM – Wiring harness connector (wiring harness side) terminal G88-41 & Pedal Position Sensor – Wiring harness connector (wiring harness side) terminal G82-1 or • Defective component: ECM **NOTE:** **If ECM is replaced, register vehicle specification into ECM by performing procedure described in "ECM registration" in Section 6E3.**
E04	• Short circuit to ground/interruption of circuit between: ECM – Wiring harness connector (wiring harness side) terminal G88-32 & Pedal Position Sensor – Wiring harness connector (wiring harness side) terminal G82-2 or • Defective component: ECM **NOTE:** **If ECM is replaced, register vehicle specification into ECM by performing procedure described in "ECM registration" in Section 6E3.**
E05	• Short circuit to voltage between: ECM – Wiring harness connector (wiring harness side) terminal G88-15 & Pedal Position Sensor – Wiring harness connector (wiring harness side) terminal G82-6
E06	• Short circuit to ground/interruption of circuit between: ECM – Wiring harness connector (wiring harness side) terminal G88-15 & Pedal Position Sensor – Wiring harness connector (wiring harness side) terminal G82-6 or • Defective component: ECM **NOTE:** **If ECM is replaced, register vehicle specification into ECM by performing procedure described in "ECM registration" in Section 6E3.**

Result	Cause Of Fault
E07	• Short circuit to voltage between: ECM – Wiring harness connector (wiring harness side) terminal G88-65 & Pedal Position Sensor – Wiring harness connector (wiring harness side) terminal G82-4 or • Defective component: ECM **NOTE:** **If ECM is replaced, register vehicle specification into ECM by performing procedure described in "ECM registration" in Section 6E3.**
E08	• Circuit interruption between: ECM – Wiring harness connector (wiring harness side) terminal G88-65 & Pedal Position Sensor – Wiring harness connector (wiring harness side) terminal G82-4 or • Defective component: ECM **NOTE:** **If ECM is replaced, register vehicle specification into ECM by performing procedure described in "ECM registration" in Section 6E3.**
E09	• Circuit interruption between: Pedal Position Sensor – Wiring harness connector (wiring harness side) terminal G82-3 & ECM – Wiring harness connector (wiring harness side) terminal G88-35 or • Defective component: ECM **NOTE:** **If ECM is replaced, register vehicle specification into ECM by performing procedure described in "ECM registration" in Section 6E3.**
E10	• Short circuit to voltage between: ECM – Wiring harness connector (wiring harness side) terminal G88-83 & Pedal Position Sensor – Wiring harness connector (wiring harness side) terminal G82-5 or • Defective component: ECM **NOTE:** **If ECM is replaced, register vehicle specification into ECM by performing procedure described in "ECM registration" in Section 6E3.**

Result	Cause Of Fault
E11	• Short circuit to ground/interruption of circuit between: ECM – Wiring harness connector (wiring harness side) terminal G88-83 & Pedal Position Sensor – Wiring harness connector (wiring harness side) terminal G82-5 or • Defective component: ECM **NOTE:** **If ECM is replaced, register vehicle specification into ECM by performing procedure described in "ECM registration" in Section 6E3.**

C11, Barometer Sensor Circuit

Result Table

Result	Cause Of Fault
E01	• Defective component: ECM **NOTE:** **If ECM is replaced, register vehicle specification into ECM by performing procedure described in "ECM registration" in Section 6E3.**

C-12, Boost Pressure Sensor Circuit

Test Table (For RM413D)

Test	Work Order Description	Nominal Value
T01	Check: Circuit Interruption of Ground Circuit	
	• Ignition OFF • Disconnect wiring harness connector from: Boost Pressure Sensor • Ignition ON • Measure voltage between the following terminals: Boost Pressure Sensor – Wiring harness connector (wiring harness side) terminal C48-1 & Boost Pressure Sensor – Wiring harness connector (wiring harness side) terminal C48-2	4.8 ... 5.2 V
	Yes: T02	No: T05
T02	Check: Short to Voltage of Signal Circuit	
	• Ignition OFF • Disconnect wiring harness connector from: ECM (Wiring Harness Connector C66) • Ignition ON • Measure voltage between the following terminals: Boost Pressure Sensor – Wiring harness connector (wiring harness side) terminal C48-3 & Ground	less than 0.3 V
	Yes: T03	No: E04
T03	Check: Interruption of Signal Circuit	
	• Measure resistance between the following terminals: Boost Pressure Sensor – Wiring harness connector (wiring harness side) terminal C48-3 & ECM – Wiring harness connector (wiring harness side) terminal C66-41	less than 5 Ohm
	Yes: T04	No: E03
T04	Check: Short to Ground of Signal Circuit	
	• Measure resistance between the following terminals: Boost Pressure Sensor – Wiring harness connector (wiring harness side) terminal C48-3 & Ground	greater than 500 kOhm
	Yes: E01	No: E02

Test	Work Order Description	Nominal Value
T05	Check: Circuit Interruption of Ground Circuit	
	• Ignition OFF • Disconnect wiring harness connector from: Boost Pressure Sensor • Ignition ON • Measure voltage between the following terminals: Boost Pressure Sensor – Wiring harness connector (wiring harness side) terminal C48-1 & Boost Pressure Sensor – Wiring harness connector (wiring harness side) terminal C48-2	less than 4.8 V
	Yes: E05	No: E06

Result Table (For RM413D)

Result	Cause Of Fault
E01	• Defective component: Boost Pressure Sensor or ECM **NOTE:** **• The replacement of the components must be done in the listed order. The system must be checked for proper operation after every replacement.** **• If ECM is replaced, register vehicle specification into ECM by performing procedure described in "ECM registration" in Section 6E3.**
E02	• Short circuit to ground between: Boost Pressure Sensor – Wiring harness connector (wiring harness side) terminal C48-3 & ECM – Wiring harness connector (wiring harness side) terminal C66-41
E03	• Circuit interruption between: Boost Pressure Sensor – Wiring harness connector (wiring harness side) terminal C48-3 & ECM – Wiring harness connector (wiring harness side) terminal C66-41
E04	• Short circuit to voltage between: Boost Pressure Sensor – Wiring harness connector (wiring harness side) terminal C48-3 & ECM – Wiring harness connector (wiring harness side) terminal C66-41 or • Defective component: ECM **NOTE:** **If ECM is replaced, register vehicle specification into ECM by performing procedure described in "ECM registration" in Section 6E3.**
E05	• Circuit interruption between: Boost Pressure Sensor – Wiring harness connector (wiring harness side) terminal C48-2 & ECM – Wiring harness connector (wiring harness side) terminal C66-24 or • Defective component: ECM **NOTE:** **If ECM is replaced, register vehicle specification into ECM by performing procedure described in "ECM registration" in Section 6E3.**
E06	• Short circuit to voltage between: ECM – Wiring harness connector (wiring harness side) terminal C66-24 & Boost Pressure Sensor – Wiring harness connector (wiring harness side) terminal C48-2

Test Table (For RB413D)

Test	Work Order Description	Nominal Value
T01	Check: Circuit Interruption of Ground Circuit	
	• Ignition OFF • Disconnect wiring harness connector from: Boost Pressure Sensor • Ignition ON • Measure voltage between the following terminals: Boost Pressure Sensor – Wiring harness connector (wiring harness side) terminal D29-3 & Boost Pressure Sensor – Wiring harness connector (wiring harness side) terminal D29-2	4.8 ... 5.2 V
	Yes: T02	No: T05
T02	Check: Short to Voltage of Signal Circuit	
	• Ignition OFF • Disconnect wiring harness connector from: ECM (Wiring Harness Connector D26) • Ignition ON • Measure voltage between the following terminals: Boost Pressure Sensor – Wiring harness connector (wiring harness side) terminal D29-1 & Ground	less than 0.3 V
	Yes: T03	No: E04
T03	Check: Interruption of Signal Circuit	
	• Measure resistance between the following terminals: Boost Pressure Sensor – Wiring harness connector (wiring harness side) terminal D29-1 & ECM – Wiring harness connector (wiring harness side) terminal D26-41	less than 5 Ohm
	Yes: T04	No: E03
T04	Check: Short to Ground of Signal Circuit	
	• Measure resistance between the following terminals: Boost Pressure Sensor – Wiring harness connector (wiring harness side) terminal D29-1 & Ground	greater than 500 kOhm
	Yes: E01	No: E02

Test	Work Order Description	Nominal Value
T05	Check: Circuit Interruption of Ground Circuit	
	• Ignition OFF • Disconnect wiring harness connector from: Boost Pressure Sensor • Ignition ON • Measure voltage between: Boost Pressure Sensor – Wiring harness connector (wiring harness side) terminal D29-3 & Boost Pressure Sensor – Wiring harness connector (wiring harness side) terminal D29-2	less than 4.8 V
	Yes: E05	No: E06

Result Table (For RB413D)

Result	Cause Of Fault
E01	• Defective component: Boost Pressure Sensor or ECM **NOTE:** **• The replacement of the components must be done in the listed order.** **The system must be checked for proper operation after every replacement.** **• If ECM is replaced, register vehicle specification into ECM by performing procedure described in "ECM registration" in Section 6E3.**
E02	• Short circuit to ground between: Boost Pressure Sensor – Wiring harness connector (wiring harness side) terminal D29-1 & ECM – Wiring harness connector (wiring harness side) terminal D26-41
E03	• Circuit interruption between: Boost Pressure Sensor – Wiring harness connector (wiring harness side) terminal D29-1 & ECM – Wiring harness connector (wiring harness side) terminal D26-41
E04	• Short circuit to voltage between: Boost Pressure Sensor – Wiring harness connector (wiring harness side) terminal D29-1 & ECM – Wiring harness connector (wiring harness side) terminal D26-41 or • Defective component: ECM **NOTE:** **If ECM is replaced, register vehicle specification into ECM by performing procedure described in "ECM registration" in Section 6E3.**
E05	• Circuit interruption between: Boost Pressure Sensor – Wiring harness connector (wiring harness side) terminal D29-2 & ECM – Wiring harness connector (wiring harness side) terminal D26-24 or • Defective component: ECM **NOTE:** **If ECM is replaced, register vehicle specification into ECM by performing procedure described in "ECM registration" in Section 6E3.**
E06	• Short circuit to voltage between: ECM – Wiring harness connector (wiring harness side) terminal D26-24 & Boost Pressure Sensor – Wiring harness connector (wiring harness side) terminal D29-2

C-13, Intake Air Temperature Sensor Circuit

Test Table (For RM413D)

Test	Work Order Description	Nominal Value
T01	Check: Short to Voltage/Ground/Interruption of Signal Circuit	4.8 ... 5.2 V
	• Ignition OFF • Disconnect wiring harness connector from: MAF and IAT Sensor • Ignition ON • Measure voltage between the following terminals: MAF and IAT Sensor – Wiring harness connector (wiring harness side) terminal C79-1 & Ground	
	Yes: T02	No: T04
T02	Check: Component	greater than 4.8 V
	• Scan Tool Data List Parameter Intake Air Temperature	
	Yes: T03	No: E03
T03	Check: Circuit Interruption of Ground Circuit	less than 0.3 V
	• Connect fused jumper wire to: MAF and IAT Sensor – Wiring harness connector (wiring harness side) terminal C79-1 & MAF and IAT Sensor – Wiring harness connector (wiring harness side) terminal C79-3 • Scan Tool Data List Parameter Intake Air Temperature	
	Yes: E01	No: E02
T04	Check: Short to Voltage/Ground/Interruption of Signal Circuit	greater than 5.2 V
	• Ignition OFF • Disconnect wiring harness connector from: MAF and IAT Sensor • Ignition ON • Measure voltage between the following terminals: MAF and IAT Sensor – Wiring harness connector (wiring harness side) terminal C79-1 & Ground	
	Yes: E04	No: E05

Result Table (For RM413D)

Result	Cause Of Fault
E01	• Defective component: MAF and IAT Sensor
E02	• Short circuit to voltage/interruption of circuit between: MAF and IAT Sensor – Wiring harness connector (wiring harness side) terminal C79-3 & ECM – Wiring harness connector (wiring harness side) terminal C66-27 or • Defective component: ECM **NOTE:** **If ECM is replaced, register vehicle specification into ECM by performing procedure described in "ECM registration" in Section 6E3.**
E03	• Defective component: ECM **NOTE:** **If ECM is replaced, register vehicle specification into ECM by performing procedure described in "ECM registration" in Section 6E3.**
E04	• Short circuit to voltage between: ECM – Wiring harness connector (wiring harness side) terminal C66-10 & MAF and IAT Sensor – Wiring harness connector (wiring harness side) terminal C79-1 or • Defective component: ECM **NOTE:** **If ECM is replaced, register vehicle specification into ECM by performing procedure described in "ECM registration" in Section 6E3.**
E05	• Short circuit to ground/interruption of circuit between: ECM – Wiring harness connector (wiring harness side) terminal C66-10 & MAF and IAT Sensor – Wiring harness connector (wiring harness side) terminal C79-1 or • Defective component: ECM **NOTE:** **If ECM is replaced, register vehicle specification into ECM by performing procedure described in "ECM registration" in Section 6E3.**

Test Table (For RB413D)

Test	Work Order Description	Nominal Value
T01	Check: Short to Voltage/Ground/Interruption of Signal Circuit	4.8 ... 5.2 V
	• Ignition OFF • Disconnect wiring harness connector from: MAF and IAT Sensor • Ignition ON • Measure voltage between the following terminals: MAF and IAT Sensor – Wiring harness connector (wiring harness side) terminal D42-1 & Ground	
	Yes: T02	No: T04
T02	Check: Component	greater than 4.8 V
	• Scan Tool Data List Parameter Intake Air Temperature	
	Yes: T03	No: E03
T03	Check: Circuit Interruption of Ground Circuit	less than 0.3 V
	• Connect fused jumper wire to: MAF and IAT Sensor – Wiring harness connector (wiring harness side) terminal D42-1 & MAF and IAT Sensor – Wiring harness connector (wiring harness side) terminal D42-3 • Scan Tool Data List Parameter Intake Air Temperature	
	Yes: E01	No: E02
T04	Check: Short to Voltage/Ground/Interruption of Signal Circuit	greater than 5.2 V
	• Ignition OFF • Disconnect wiring harness connector from: MAF and IAT Sensor • Ignition ON • Measure voltage between the following terminals: MAF and IAT Sensor – Wiring harness connector (wiring harness side) terminal D42-1 & Ground	
	Yes: E04	No: E05

Result Table (For RB413D)

Result	Cause Of Fault
E01	• Defective component: MAF and IAT Sensor
E02	• Short circuit to voltage/interruption of circuit between: MAF and IAT Sensor – Wiring harness connector (wiring harness side) terminal D42-3 & ECM – Wiring harness connector (wiring harness side) terminal D26-24 or • Defective component: ECM **NOTE:** **If ECM is replaced, register vehicle specification into ECM by performing procedure described in "ECM registration" in Section 6E3.**
E03	• Defective component: ECM **NOTE:** **If ECM is replaced, register vehicle specification into ECM by performing procedure described in "ECM registration" in Section 6E3.**
E04	• Short circuit to voltage between: ECM – Wiring harness connector (wiring harness side) terminal D26-10 & MAF and IAT Sensor – Wiring harness connector (wiring harness side) terminal D42-1 or • Defective component: ECM **NOTE:** **If ECM is replaced, register vehicle specification into ECM by performing procedure described in "ECM registration" in Section 6E3.**
E05	• Short circuit to ground/interruption of circuit between: ECM – Wiring harness connector (wiring harness side) terminal D26-10 & MAF and IAT Sensor – Wiring harness connector (wiring harness side) terminal D42-1 or • Defective component: ECM **NOTE:** **If ECM is replaced, register vehicle specification into ECM by performing procedure described in "ECM registration" in Section 6E3.**

C-14, Mass or Volume Air Flow Circuit

Test Table (For RM413D)

Test	Work Order Description	Nominal Value
T01	Check: Interruption of Voltage Supply Circuit	
	• Ignition OFF • Disconnect wiring harness connector from: MAF and IAT Sensor • Ignition ON • Measure voltage between the following terminals: MAF and IAT Sensor – Wiring harness connector (wiring harness side) terminal C79-2 & Ground	greater than 11 V
	Yes: T02	No: E08
T02	Check: Short to Voltage/Interruption of Ground Circuit	
	• Measure voltage between the following terminals: MAF and IAT Sensor – Wiring harness connector (wiring harness side) terminal C79-2 & MAF and IAT Sensor – Wiring harness connector (wiring harness side) terminal C79-3	greater than 11 V
	Yes: T03	No: T07
T03	Check: Short to Voltage/Ground/Interruption of Voltage Supply	
	• Measure voltage between the following terminals: MAF and IAT Sensor – Wiring harness connector (wiring harness side) terminal C79-4 & Ground	4.8 ... 5.2 V
	Yes: T04	No: E05
T04	Check: Short to Voltage/Ground/Interruption of Signal Circuit	
	• Ignition OFF • Disconnect wiring harness connector from: ECM (Wiring Harness Connector C66) • Ignition ON • Measure voltage between the following terminals: MAF and IAT Sensor – Wiring harness connector (wiring harness side) terminal C79-5 & Ground	less than 0.3 V
	Yes: T05	No: E04
T05	Check: Short to Ground of Signal Circuit	
	• Measure resistance between the following terminals: MAF and IAT Sensor – Wiring harness connector (wiring harness side) terminal C79-5 & Ground	greater than 500 kOhm
	Yes: T06	No: E03

Test	Work Order Description	Nominal Value
T06	Check: Interruption of Signal Circuit	
	• Measure resistance between the following terminals: MAF and IAT Sensor – Wiring harness connector (wiring harness side) terminal C79-5 & ECM – Wiring harness connector (wiring harness side) terminal C66-14	less than 5 Ohm
	Yes: E01	No: E02
T07	Check: Short to Voltage of Ground Circuit	
	• Measure voltage between the following terminals: MAF and IAT Sensor – Wiring harness connector (wiring harness side) terminal C79-3 & Ground	less than 0.3 V
	Yes: E06	No: E07

Result table (For RM413D)

Result	Cause Of Fault
E01	• Defective component: MAF and IAT Sensor or ECM **NOTE:** • **The replacement of the components must be done in the listed order. The system must be checked for proper operation after every replacement.** • **If ECM is replaced, register vehicle specification into ECM by performing procedure described in "ECM registration" in Section 6E3.**
E02	• Circuit interruption between: ECM – Wiring harness connector (wiring harness side) terminal C66-14 & MAF and IAT Sensor – Wiring harness connector (wiring harness side) terminal C79-5
E03	• Short circuit to ground between: ECM – Wiring harness connector (wiring harness side) terminal C66-14 & MAF and IAT Sensor – Wiring harness connector (wiring harness side) terminal C79-5
E04	• Short circuit to voltage between: ECM – Wiring harness connector (wiring harness side) terminal C66-14 & MAF and IAT Sensor – Wiring harness connector (wiring harness side) terminal C79-5
E05	• Circuit interruption between: ECM – Wiring harness connector (wiring harness side) terminal C66-40 & MAF and IAT Sensor – Wiring harness connector (wiring harness side) terminal C79-4
E06	• Circuit interruption between: MAF and IAT Sensor – Wiring harness connector (wiring harness side) terminal C79-3 & ECM – Wiring harness connector (wiring harness side) terminal C66-27 or • Defective component: ECM **NOTE:** **If ECM is replaced, register vehicle specification into ECM by performing procedure described in "ECM registration" in Section 6E3.**
E07	• Short circuit to voltage between: ECM – Wiring harness connector (wiring harness side) terminal C66-27 & MAF and IAT Sensor – Wiring harness connector (wiring harness side) terminal C79-3 or • Defective component: ECM **NOTE:** **If ECM is replaced, register vehicle specification into ECM by performing procedure described in "ECM registration" in Section 6E3.**

Result	Cause Of Fault
E08	• Circuit interruption between: Circuit Fuse – Output contact & MAF and IAT Sensor – Wiring harness connector (wiring harness side) terminal C79-2

Test Table (For RB413D)

Test	Work Order Description	Nominal Value
T01	Check: Interruption of Voltage Supply Circuit	
	• Ignition OFF • Disconnect wiring harness connector from: MAF and IAT Sensor • Ignition ON • Measure voltage between the following terminals: MAF and IAT Sensor – Wiring harness connector (wiring harness side) terminal D42-2 & Ground	greater than 11 V
	Yes: T02	No: E08
T02	Check: Short to Voltage/Interruption of Ground Circuit	
	• Measure voltage between the following terminals: MAF and IAT Sensor – Wiring harness connector (wiring harness side) terminal D42-2 & MAF and IAT Sensor – Wiring harness connector (wiring harness side) terminal D42-3	greater than 11 V
	Yes: T03	No: T07
T03	Check: Short to Voltage/Ground/Interruption of Voltage Supply	
	• Measure voltage between the following terminals: MAF and IAT Sensor – Wiring harness connector (wiring harness side) terminal D42-4 & Ground	4.8 ... 5.2 V
	Yes: T04	No: E05
T04	Check: Short to Voltage/Ground/Interruption of Signal Circuit	
	• Ignition OFF • Disconnect wiring harness connector from: ECM (Wiring Harness Connector D26) • Ignition ON • Measure voltage between the following terminals: MAF and IAT Sensor – Wiring harness connector (wiring harness side) terminal D42-5 & Ground	less than 0.3 V
	Yes: T05	No: E04
T05	Check: Short to Ground of Signal Circuit	
	• Measure resistance between the following terminals: MAF and IAT Sensor – Wiring harness connector (wiring harness side) terminal D42-5 & Ground	greater than 500 kOhm
	Yes: T06	No: E03

Test	Work Order Description	Nominal Value
T06	Check: Interruption of Signal Circuit	
	• Measure resistance between the following terminals: MAF and IAT Sensor – Wiring harness connector (wiring harness side) terminal D42-5 & ECM – Wiring harness connector (wiring harness side) terminal D26-14	less than 5 Ohm
	Yes: E01	No: E02
T07	Check: Short to Voltage of Ground Circuit	
	• Measure voltage between the following terminals: MAF and IAT Sensor – Wiring harness connector (wiring harness side) terminal D42-3 & Ground	less than 0.3 V
	Yes: E06	No: E07

Result Table (For RB413D)

Result	Cause Of Fault
E01	• Defective component: MAF and IAT Sensor or ECM **NOTE:** • **The replacement of the components must be done in the listed order. The system must be checked for proper operation after every replacement.** • **If ECM is replaced, register vehicle specification into ECM by performing procedure described in "ECM registration" in Section 6E3.**
E02	• Circuit interruption between: ECM – Wiring harness connector (wiring harness side) terminal D26-14 & MAF and IAT Sensor – Wiring harness connector (wiring harness side) terminal D42-5
E03	• Short circuit to ground between: ECM – Wiring harness connector (wiring harness side) terminal D26-14 & MAF and IAT Sensor – Wiring harness connector (wiring harness side) terminal D42-5
E04	• Short circuit to voltage between: ECM – Wiring harness connector (wiring harness side) terminal D26-14 & MAF and IAT Sensor – Wiring harness connector (wiring harness side) terminal D42-5
E05	• Circuit interruption between: ECM – Wiring harness connector (wiring harness side) terminal D26-40 & MAF and IAT Sensor – Wiring harness connector (wiring harness side) terminal D42-4
E06	• Circuit interruption between: MAF and IAT Sensor – Wiring harness connector (wiring harness side) terminal D42-3 & ECM – Wiring harness connector (wiring harness side) terminal D26-27 or • Defective component: ECM **NOTE:** **If ECM is replaced, register vehicle specification into ECM by performing procedure described in "ECM registration" in Section 6E3.**
E07	• Short circuit to voltage between: ECM – Wiring harness connector (wiring harness side) terminal D26-27 & MAF and IAT Sensor – Wiring harness connector (wiring harness side) terminal D42-3 or • Defective component: ECM **NOTE:** **If ECM is replaced, register vehicle specification into ECM by performing procedure described in "ECM registration" in Section 6E3.**

Result	Cause Of Fault
E08	• Circuit interruption between: Circuit Fuse – Output contact & MAF and IAT Sensor – Wiring harness connector (wiring harness side) terminal D42-2

C-15, Engine Coolant Temperature Sensor Circuit

Test Table (For RM413D)

Test	Work Order Description	Nominal Value
T01	Check: Short to Voltage/Ground/Interruption of Signal Circuit	4.8 ... 5.2 V
	• Ignition OFF • Disconnect wiring harness connector from: ECT Sensor • Ignition ON • Measure voltage between the following terminals: ECT Sensor – Wiring harness connector (wiring harness side) terminal C19-1 & Ground	
	Yes: T02	No: T05
T02	Check: Circuit Interruption of Ground Circuit	4.8 ... 5.2 V
	• Measure voltage between the following terminals: ECT Sensor – Wiring harness connector (wiring harness side) terminal C19-2 & ECT Sensor – Wiring harness connector (wiring harness side) terminal C19-1	
	Yes: T03	No: E03
T03	Check: Component	greater than 4.8 V
	• Scan Tool Data List Parameter Coolant Temperature	
	Yes: T04	No: E02
T04	Check: Component	less than 0.3 V
	• Ignition OFF • Connect fused jumper wire to: ECT Sensor – Wiring harness connector (wiring harness side) terminal C19-2 & ECT Sensor – Wiring harness connector (wiring harness side) terminal C19-1 • Ignition ON • Scan Tool Data List Parameter Coolant Temperature	
	Yes: E01	No: E02
T05	Check: Short to Voltage/Ground/Interruption of Signal Circuit	greater than 5.2 V
	• Ignition OFF • Disconnect wiring harness connector from: ECT Sensor • Ignition ON • Measure voltage between the following terminals: ECT Sensor – Wiring harness connector (wiring harness side) terminal C19-1 & Ground	
	Yes: E04	No: E05

Result Table (For RM413D)

Result	Cause Of Fault
E01	• Defective component: ECT Sensor
E02	• Defective component: ECM **NOTE:** **If ECM is replaced, register vehicle specification into ECM by performing procedure described in "ECM registration" in Section 6E3.**
E03	• Short circuit to voltage/interruption of circuit between: ECM – Wiring harness connector (wiring harness side) terminal C66-29 & ECT Sensor – Wiring harness connector (wiring harness side) terminal C19-2 or • Defective component: ECM **NOTE:** **If ECM is replaced, register vehicle specification into ECM by performing procedure described in "ECM registration" in Section 6E3.**
E04	• Short circuit to voltage between: ECM – Wiring harness connector (wiring harness side) terminal C66-54 & ECT Sensor – Wiring harness connector (wiring harness side) terminal C19-1 or • Defective component: ECM **NOTE:** **If ECM is replaced, register vehicle specification into ECM by performing procedure described in "ECM registration" in Section 6E3.**
E05	• Short circuit to ground between: ECM – Wiring harness connector (wiring harness side) terminal C66-54 & ECT Sensor – Wiring harness connector (wiring harness side) terminal C19-1 or • Defective component: ECM **NOTE:** **If ECM is replaced, register vehicle specification into ECM by performing procedure described in "ECM registration" in Section 6E3.**

Test Table (For RB413D)

Test	Work Order Description	Nominal Value
T01	Check: Short to Voltage/Ground/Interruption of Signal Circuit	4.8 ... 5.2 V
	• Ignition OFF • Disconnect wiring harness connector from: ECT Sensor • Ignition ON • Measure voltage between the following terminals: ECT Sensor – Wiring harness connector (wiring harness side) terminal D44-1 & Ground	
	Yes: T02	No: T05
T02	Check: Circuit Interruption of Ground Circuit	4.8 ... 5.2 V
	• Measure voltage between the following terminals: ECT Sensor – Wiring harness connector (wiring harness side) terminal D44-2 & ECT Sensor – Wiring harness connector (wiring harness side) terminal D44-1	
	Yes: T03	No: E03
T03	Check: Component	greater than 4.8 V
	• Scan Tool Data List Parameter Coolant Temperature	
	Yes: T04	No: E02
T04	Check: Component	less than 0.3 V
	• Ignition OFF • Connect fused jumper wire to: ECT Sensor – Wiring harness connector (wiring harness side) terminal D44-2 & ECT Sensor – Wiring harness connector (wiring harness side) terminal D44-1 • Ignition ON • Scan Tool Data List Parameter Coolant Temperature	
	Yes: E01	No: E02
T05	Check: Short to Voltage/Ground/Interruption of Signal Circuit	greater than 5.2 V
	• Ignition OFF • Disconnect wiring harness connector from: ECT Sensor • Ignition ON • Measure voltage between the following terminals: ECT Sensor – Wiring harness connector (wiring harness side) terminal D44-1 & Ground	
	Yes: E04	No: E05

Result Table (For RB413D)

Result	Cause Of Fault
E01	• Defective component: ECT Sensor
E02	• Defective component: ECM **NOTE:** **If ECM is replaced, register vehicle specification into ECM by performing procedure described in "ECM registration" in Section 6E3.**
E03	• Short circuit to voltage/interruption of circuit between: ECM – Wiring harness connector (wiring harness side) terminal D26-29 & ECT Sensor – Wiring harness connector (wiring harness side) terminal D44-2 or • Defective component: ECM **NOTE:** **If ECM is replaced, register vehicle specification into ECM by performing procedure described in "ECM registration" in Section 6E3.**
E04	• Short circuit to voltage between: ECM – Wiring harness connector (wiring harness side) terminal D26-54 & ECT Sensor – Wiring harness connector (wiring harness side) terminal D44-1 or • Defective component: ECM **NOTE:** **If ECM is replaced, register vehicle specification into ECM by performing procedure described in "ECM registration" in Section 6E3.**
E05	• Short circuit to ground between: ECM – Wiring harness connector (wiring harness side) terminal D26-54 & ECT Sensor – Wiring harness connector (wiring harness side) terminal D44-1 or • Defective component: ECM **NOTE:** **If ECM is replaced, register vehicle specification into ECM by performing procedure described in "ECM registration" in Section 6E3.**

C-16, Fuel Temperature Sensor Circuit

Test Table (For RM413D)

Test	Work Order Description	Nominal Value
T01	Check: Short to Voltage of Signal Circuit	less than 0.3 V
	• Ignition OFF • Disconnect wiring harness connector from: ECM • Ignition ON • Measure voltage between the following terminals: ECM – Wiring harness connector (wiring harness side) terminal E27-13 & Ground	
	Yes: T02	No: E05
T02	Check: Short to Ground of Signal Circuit	greater than 500 kOhm
	• Ignition OFF • Measure resistance between the following terminals: ECM – Wiring harness connector (wiring harness side) terminal E27-13 & Ground	
	Yes: T03	No: E04
T03	Check: Interruption of Signal Circuit	less than 5 Ohm
	• Disconnect wiring harness connector from: Fuel Heater and Temperature Sensor • Measure resistance between the following terminals: ECM – Wiring harness connector (wiring harness side) terminal E27-13 & Fuel Heater and Temperature Sensor – Wiring harness connector (wiring harness side) terminal E50-4	
	Yes: T04	No: E03
T04	Check: Interruption of Signal Circuit	less than 5 Ohm
	• Measure resistance between the following terminals: ECM – Wiring harness connector (wiring harness side) terminal E27-61 & Fuel Heater and Temperature Sensor – Wiring harness connector (wiring harness side) terminal E50-3	
	Yes: E01	No: E02

Result Table (For RM413D)

Result	Cause Of Fault
E01	• Defective component: Fuel Heater and Temperature Sensor or ECM **NOTE:** • **The replacement of the components must be done in the listed order.** **The system must be checked for proper operation after every replacement.** • **If ECM is replaced, register vehicle specification into ECM by performing procedure described in "ECM registration" in Section 6E3.**
E02	• Circuit interruption between: ECM – Wiring harness connector (wiring harness side) terminal E27-61 & Fuel Heater and Temperature Sensor – Wiring harness connector (wiring harness side) terminal E50-3
E03	• Circuit interruption between: ECM – Wiring harness connector (wiring harness side) terminal E27-13 & Fuel Heater and Temperature Sensor – Wiring harness connector (wiring harness side) terminal E50-4
E04	• Short circuit to ground between: ECM – Wiring harness connector (wiring harness side) terminal E27-13 & Fuel Heater and Temperature Sensor – Wiring harness connector (wiring harness side) terminal E50-1 or ECM – Wiring harness connector (wiring harness side) terminal E27-61 & Fuel Heater and Temperature Sensor – Wiring harness connector (wiring harness side) terminal E50-3 or • Defective component: Fuel Heater and Temperature Sensor
E05	• Short circuit to voltage between: ECM – Wiring harness connector (wiring harness side) terminal E27-13 & Fuel Heater and Temperature Sensor Wiring harness connector (wiring harness side) terminal E50-4 or ECM – Wiring harness connector (wiring harness side) terminal E27-61 & Fuel Heater and Temperature Sensor – Wiring harness connector (wiring harness side) terminal E50-3 or • Defective component: Fuel Heater and Temperature Sensor

Test Table (For RB413D)

Test	Work Order Description	Nominal Value
T01	Check: Short to Voltage of Signal Circuit	less than 0.3 V
	• Ignition OFF • Disconnect wiring harness connector from: ECM • Ignition ON • Measure voltage between the following terminals: ECM – Wiring harness connector (wiring harness side) terminal G88-13 & Ground	
	Yes: T02	No: E05
T02	Check: Short to Ground of Signal Circuit	greater than 500 kOhm
	• Ignition OFF • Measure resistance between the following terminals: ECM – Wiring harness connector (wiring harness side) terminal G88-13 & Ground	
	Yes: T03	No: E04
T03	Check: Interruption of Signal Circuit	less than 5 Ohm
	• Disconnect wiring harness connector from: Fuel Heater and Temperature Sensor • Measure resistance between the following terminals: ECM – Wiring harness connector (wiring harness side) terminal G88-13 & Fuel Heater and Temperature Sensor – Wiring harness connector (wiring harness side) terminal E67-4	
	Yes: T04	No: E03
T04	Check: Interruption of Signal Circuit	less than 5 Ohm
	• Measure resistance between the following terminals: ECM – Wiring harness connector (wiring harness side) terminal G88-61 & Fuel Heater and Temperature Sensor – Wiring harness connector (wiring harness side) terminal E67-3	
	Yes: E01	No: E02

Result Table (For RB413D)

Result	Cause Of Fault
E01	• Defective component: Fuel Heater and Temperature Sensor or ECM **NOTE:** • **The replacement of the components must be done in the listed order. The system must be checked for proper operation after every replacement.** • **If ECM is replaced, register vehicle specification into ECM by performing procedure described in "ECM registration" in Section 6E3.**
E02	• Circuit interruption between: ECM – Wiring harness connector (wiring harness side) terminal G88-61 & Fuel Heater and Temperature Sensor – Wiring harness connector (wiring harness side) terminal E67-3
E03	• Circuit interruption between: ECM – Wiring harness connector (wiring harness side) terminal G88-13 & Fuel Heater and Temperature Sensor – Wiring harness connector (wiring harness side) terminal E67-4
E04	• Short circuit to ground between: ECM – Wiring harness connector (wiring harness side) terminal G88-13 & Fuel Heater and Temperature Sensor – Wiring harness connector (wiring harness side) terminal E67-4 or ECM – Wiring harness connector (wiring harness side) terminal G88-61 & Fuel Heater and Temperature Sensor – Wiring harness connector (wiring harness side) terminal E67-3 or • Defective component: Fuel Heater and Temperature Sensor
E05	• Short circuit to voltage between: ECM – Wiring harness connector (wiring harness side) terminal G88-13 & Fuel Heater and Temperature Sensor – Wiring harness connector (wiring harness side) terminal E67-4 or ECM – Wiring harness connector (wiring harness side) terminal G88-61 & Fuel Heater and Temperature Sensor – Wiring harness connector (wiring harness side) terminal E67-3 or • Defective component: Fuel Heater and Temperature Sensor

C-17, Fuel Rail Pressure Sensor Circuit

NOTE:

Before starting diagnosis, check the value of the fuel rail pressure by using scan tool.
For checking the value, refer to "B-02, Data List" in this section.
If the value is less than 0.15 V or more than 4.85 V, go to "C-17, Fuel Rail Pressure Sensor Circuit". If not, go to "C-18, Rail Oil Pressure Sensor Circuit".

Test Table (For RM413D)

Test	Work Order Description	Nominal Value
T01	Check: Short to Voltage/Ground/Interruption of Signal Circuit	
	• Ignition OFF • Disconnect wiring harness connector from: Fuel Pressure Sensor • Ignition ON • Measure voltage between the following terminals: Fuel Pressure Sensor – Wiring harness connector (wiring harness side) terminal C40-3 & Ground	4.8 ... 5.2 V
	Yes: T02	No: T06
T02	Check: Short to Voltage/Interruption of Signal Circuit	
	• Measure voltage between the following terminals: Fuel Pressure Sensor – Wiring harness connector (wiring harness side) terminal C40-3 & Fuel Pressure Sensor – Wiring harness connector (wiring harness side) terminal C40-1	4.8 ... 5.2 V
	Yes: T03	No: E05
T03	Check: Short to Voltage of Signal Circuit	
	• Ignition OFF • Disconnect wiring harness connector from: ECM (Wiring Harness Connector C66) • Ignition ON • Measure voltage between the following terminal: Fuel Pressure Sensor – Wiring harness connector (wiring harness side) terminal C40-2 & Ground	less than 0.3 V
	Yes: T04	No: E04
T04	Check: Short to Ground/Interruption of Signal Circuit	
	• Ignition OFF • Measure resistance between the following terminal: Fuel Pressure Sensor – Wiring harness connector (wiring harness side) terminal C40-2 & Ground	greater than 500 kOhm
	Yes: T05	No: E03

Test	Work Order Description	Nominal Value
T05	Check: Interruption in Wiring Harness	
	• Measure resistance between the following terminals: Fuel Pressure Sensor – Wiring harness connector (wiring harness side) terminal C40-2 & ECM – Wiring harness connector (wiring harness side) terminal C66-38	less than 5 Ohm
	Yes: E01	No: E02
T06	Check: Short to Voltage/Ground/Interruption of Signal Circuit	
	• Ignition OFF • Disconnect wiring harness connector from: Fuel Pressure Sensor • Ignition ON • Measure voltage between the following terminals: Fuel Pressure Sensor – Wiring harness connector (wiring harness side) terminal C40-3 & Ground	greater than 5.2 V
	Yes: E06	No: E07

Result Table (For RM413D)

Result	Cause Of Fault
E01	• Defective component: Fuel Pressure Sensor or ECM **NOTE:** • **The replacement of the components must be done in the listed order. The system must be checked for proper operation after every replacement.** • **If ECM is replaced, register vehicle specification into ECM by performing procedure described in "ECM registration" in Section 6E3.**
E02	• Circuit interruption between: ECM – Wiring harness connector (wiring harness side) terminal C66-38 & Fuel Pressure Sensor – Wiring harness connector (wiring harness side) terminal C40-2
E03	• Short circuit to ground between: Fuel Pressure Sensor – Wiring harness connector (wiring harness side) terminal C40-2 & ECM – Wiring harness connector (wiring harness side) terminal C66-38
E04	• Short circuit to voltage between: Fuel Pressure Sensor – Wiring harness connector (wiring harness side) terminal C40-2 & ECM – Wiring harness connector (wiring harness side) terminal C66-38
E05	• Short circuit to voltage/interruption of circuit between: ECM – Wiring harness connector (wiring harness side) terminal C66-6 & Fuel Pressure Sensor – Wiring harness connector (wiring harness side) terminal E50-1 or • Defective component: ECM **NOTE:** **If ECM is replaced, register vehicle specification into ECM by performing procedure described in "ECM registration" in Section 6E3.**
E06	• Short circuit to voltage between: ECM – Wiring harness connector (wiring harness side) terminal C66-8 & Fuel Pressure Sensor – Wiring harness connector (wiring harness side) terminal C40-3 or • Defective component: ECM **NOTE:** **If ECM is replaced, register vehicle specification into ECM by performing procedure described in "ECM registration" in Section 6E3.**

Result	Cause Of Fault
E07	• Short circuit to ground/interruption of circuit between: ECM – Wiring harness connector (wiring harness side) terminal C66-8 & Fuel Pressure Sensor – Wiring harness connector (wiring harness side) terminal C40-3 or • Defective component: ECM **NOTE:** **If ECM is replaced, register vehicle specification into ECM by performing procedure described in "ECM registration" in Section 6E3.**

Test Table (For RB413D)

Test	Work Order Description	Nominal Value
T01	Check: Short to Voltage/Ground/Interruption of Signal Circuit	
	• Ignition OFF • Disconnect wiring harness connector from: Fuel Pressure Sensor • Ignition ON • Measure voltage between the following terminals: Fuel Pressure Sensor – Wiring harness connector (wiring harness side) terminal D28-1 & Ground	4.8 ... 5.2 V
	Yes: T02	No: T06
T02	Check: Short to Voltage/Interruption of Signal Circuit	
	• Measure voltage between the following terminals: Fuel Pressure Sensor – Wiring harness connector (wiring harness side) terminal D28-1 & Fuel Pressure Sensor – Wiring harness connector (wiring harness side) terminal D28-2	4.8 ... 5.2 V
	Yes: T03	No: E05
T03	Check: Short to Voltage of Signal Circuit	
	• Ignition OFF • Disconnect wiring harness connector from: ECM (Wiring Harness Connector D26) • Ignition ON • Measure voltage between the following terminals: Fuel Pressure Sensor – Wiring harness connector (wiring harness side) terminal D28-3 & Ground	less than 0.3 V
	Yes: T04	No: E04
T04	Check: Short to Ground/Interruption of Signal Circuit	
	• Ignition OFF • Measure resistance between the following terminals: Fuel Pressure Sensor – Wiring harness connector (wiring harness side) terminal D28-3 & Ground	greater than 500 kOhm
	Yes: T05	No: E03
T05	Check: Interruption in Wiring Harness	
	• Measure resistance between the following terminals: Fuel Pressure Sensor – Wiring harness connector (wiring harness side) terminal D28-3 & ECM – Wiring harness connector (wiring harness side) terminal D26-38	less than 5 Ohm
	Yes: E01	No: E02

Test	Work Order Description	Nominal Value
T06	Check: Short to Voltage/Ground/Interruption of Signal Circuit	
	• Ignition OFF • Disconnect wiring harness connector from: Fuel Pressure Sensor • Ignition ON • Measure voltage between the following terminals: Fuel Pressure Sensor – Wiring harness connector (wiring harness side) terminal D28-1 & Ground	greater than 5.2 V
	Yes: E06	No: E07

Result Table (For RB413D)

Result	Cause Of Fault
E01	• Defective component: Fuel Pressure Sensor or ECM **NOTE:** • **The replacement of the components must be done in the listed order. The system must be checked for proper operation after every replacement.** • **If ECM is replaced, register vehicle specification into ECM by performing procedure described in "ECM registration" in Section 6E3.**
E02	• Circuit interruption between: ECM – Wiring harness connector (wiring harness side) terminal D26-38 & Fuel Pressure Sensor – Wiring harness connector (wiring harness side) terminal D28-3
E03	• Short circuit to ground between: Fuel Pressure Sensor – Wiring harness connector (wiring harness side) terminal D28-3 & ECM – Wiring harness connector (wiring harness side) terminal D26-38
E04	• Short circuit to voltage between: Fuel Pressure Sensor – Wiring harness connector (wiring harness side) terminal D28-3 & ECM – Wiring harness connector (wiring harness side) terminal D26-38
E05	• Short circuit to voltage/interruption of circuit between: ECM – Wiring harness connector (wiring harness side) terminal D26-6 & Fuel Pressure Sensor – Wiring harness connector (wiring harness side) terminal D28-2 or • Defective component: ECM **NOTE:** **If ECM is replaced, register vehicle specification into ECM by performing procedure described in "ECM registration" in Section 6E3.**
E06	• Short circuit to voltage between: ECM – Wiring harness connector (wiring harness side) terminal D26-8 & Fuel Pressure Sensor – Wiring harness connector (wiring harness side) terminal D28-1 or • Defective component: ECM **NOTE:** **If ECM is replaced, register vehicle specification into ECM by performing procedure described in "ECM registration" in Section 6E3.**

Result	Cause Of Fault
E07	• Short circuit to ground/interruption of circuit between: ECM – Wiring harness connector (wiring harness side) terminal D26-8 & Fuel Pressure Sensor – Wiring harness connector (wiring harness side) terminal D28-1 or • Defective component: ECM **NOTE:** **If ECM is replaced, register vehicle specification into ECM by performing procedure described in "ECM registration" in Section 6E3.**

C-18, Rail Oil Pressure Sensor Circuit

Test Table

Test	Work Order Description	Nominal Value
T01	Check: Diagnostic Trouble Code stored	
	Is the following Diagnostic Trouble Code stored? P1192 Rail Pressure Higher Than Maximum	
	Yes: E01	No: T02
T02	Check: Diagnostic Trouble Code stored	
	Is the following Diagnostic Trouble Code stored? P1190 Fuel Pressure Regulator Flow	
	Yes: E01	No: E02

Result Table

Result	Cause Of Fault
E01	• Defective component: Fuel Pressure Sensor or Fuel Pressure Regulator **NOTE:** **The replacement of the components must be done in the listed order.** **The system must be checked for proper operation after every replacement.**
E02	• Defective component: Fuel Pressure Sensor

C-19, Fuel Rail Pressure Control Valve Circuit

Test Table (For RM413D)

Test	Work Order Description	Nominal Value
T01	Check: Interruption of Voltage Supply Circuit	
	• Ignition OFF • Disconnect wiring harness connector from: Fuel Pressure Regulator • Ignition ON • Measure voltage between the following terminals: Fuel Pressure Regulator – Wiring harness connector (wiring harness side) terminal C20-1 & Ground	greater than 11 V
	Yes: T02	No: T05
T02	Check: Short to Voltage of Signal Circuit	
	• Measure voltage between the following terminals: Fuel Pressure Regulator – Wiring harness connector (wiring harness side) terminal C20-1 & Fuel Pressure Regulator – Wiring harness connector (wiring harness side) terminal C20-2	greater than 11 V
	Yes: E01	No: T03
T03	Check: Short to Ground of Signal Circuit	
	• Ignition OFF • Disconnect wiring harness connector from: ECM (Wiring Harness Connector C66) • Measure resistance between the following terminals: Fuel Pressure Regulator – Wiring harness connector (wiring harness side) terminal C20-2 & Ground	greater than 500 kOhm
	Yes: T04	No: E04
T04	Check: Interruption of Signal Circuit	
	• Measure resistance between the following terminals: ECM – Wiring harness connector (wiring harness side) terminal C66-34 & Fuel Pressure Regulator – Wiring harness connector (wiring harness side) terminal C20-2	less than 5 Ohm
	Yes: E02	No: E03
T05	Check: Short to Ground of Signal Circuit	
	• Ignition OFF • Disconnect wiring harness connector from: ECM (Wiring Harness Connector C66) • Measure resistance between the following terminals: Fuel Pressure Regulator – Wiring harness connector (wiring harness side) terminal C20-1 & Ground	greater than 500 kOhm
	Yes: T06	No: E07

Test	Work Order Description	Nominal Value
T06	Check: Short to Ground of Signal Circuit	
	• Measure resistance between the following terminals: ECM – Wiring harness connector (wiring harness side) terminal C66-4 & Fuel Pressure Regulator – Wiring harness connector (wiring harness side) terminal C20-1	less than 5 kOhm
	Yes: T07	No: E06
T07	Check: Interruption of Signal Circuit	
	• Disconnect wiring harness connector from: ECM (Wiring Harness Connector E27) • Connect fused jumper wire to: ECM – Wiring harness connector (wiring harness side) terminal E27-80 & Ground • Measure voltage between the following terminals: ECM – Wiring harness connector (wiring harness side) terminal E27-5 & Ground	greater than 11 V
	Yes: E02	No: E05

Result Table (For RM413D)

Result	Cause Of Fault
E01	• Defective component: Fuel Pressure Regulator
E02	• Defective component: ECM **NOTE:** **If ECM is replaced, register vehicle specification into ECM by performing procedure described in "ECM registration" in Section 6E3.**
E03	• Circuit interruption between: ECM – Wiring harness connector (wiring harness side) terminal C66-34 & Fuel Pressure Regulator – Wiring harness connector (wiring harness side) terminal C20-2
E04	• Short circuit to ground between: ECM – Wiring harness connector (wiring harness side) terminal C66-34 & Fuel Pressure Regulator – Wiring harness connector (wiring harness side) terminal C20-2
E05	• Circuit interruption between: ECM – Wiring harness connector (wiring harness side) terminal E27-5 & Main Relay – Socket Terminal E58-4
E06	• Circuit interruption between: ECM – Wiring harness connector (wiring harness side) terminal C66-4 & Fuel Pressure Regulator – Wiring harness connector (wiring harness side) terminal C20-1
E07	• Short circuit to ground between: ECM – Wiring harness connector (wiring harness side) terminal C66-4 & Fuel Pressure Regulator – Wiring harness connector (wiring harness side) terminal C20-1

Test Table (For RB413D)

Test	Work Order Description	Nominal Value
T01	Check: Interruption of Voltage Supply Circuit	
	• Ignition OFF • Disconnect wiring harness connector from: Fuel Pressure Regulator • Ignition ON • Measure voltage between the following terminals: Fuel Pressure Regulator – Wiring harness connector (wiring harness side) terminal D30-1 & Ground	greater than 11 V
	Yes: T02	No: T05
T02	Check: Short to Voltage of Signal Circuit	
	• Measure voltage between the following terminals: Fuel Pressure Regulator – Wiring harness connector (wiring harness side) terminal D30-1 & Fuel Pressure Regulator – Wiring harness connector (wiring harness side) terminal D30-2	greater than 11 V
	Yes: E01	No: T03
T03	Check: Short to Ground of Signal Circuit	
	• Ignition OFF • Disconnect wiring harness connector from: ECM (Wiring Harness Connector D26) • Measure resistance between the following terminals: Fuel Pressure Regulator – Wiring harness connector (wiring harness side) terminal D30-2 & Ground	greater than 500 kOhm
	Yes: T04	No: E04
T04	Check: Interruption of Signal Circuit	
	• Measure resistance between the following terminals: ECM – Wiring harness connector (wiring harness side) terminal D26-34 & Fuel Pressure Regulator – Wiring harness connector (wiring harness side) terminal D30-2	less than 5 Ohm
	Yes: E02	No: E03
T05	Check: Short to Ground of Signal Circuit	
	• Ignition OFF • Disconnect wiring harness connector from: ECM (Wiring Harness Connector D26) • Measure resistance between the following terminals: Fuel Pressure Regulator – Wiring harness connector (wiring harness side) terminal D30-1 & Ground	greater than 500 kOhm
	Yes: T06	No: E07

Test	Work Order Description	Nominal Value
T06	Check: Short to Ground of Signal Circuit	
	• Measure resistance between the following terminals: ECM – Wiring harness connector (wiring harness side) terminal D26-4 & Fuel Pressure Regulator – Wiring harness connector (wiring harness side) terminal D30-1	less than 5 kOhm
	Yes: T07	No: E06
T07	Check: Interruption of Signal Circuit	
	• Disconnect wiring harness connector from: ECM (Wiring Harness Connector G88) • Connect fused jumper wire to: ECM – Wiring harness connector (wiring harness side) terminal G88-80 & Ground • Measure voltage between the following terminals: ECM – Wiring harness connector (wiring harness side) terminal G88-5 & Ground	greater than 11 V
	Yes: E02	No: E05

Result Table (For RB413D)

Result	Cause Of Fault
E01	• Defective component: Fuel Pressure Regulator
E02	• Defective component: ECM **NOTE:** **If ECM is replaced, register vehicle specification into ECM by performing procedure described in "ECM registration" in Section 6E3.**
E03	• Circuit interruption between: ECM – Wiring harness connector (wiring harness side) terminal D26-34 & Fuel Pressure Regulator – Wiring harness connector (wiring harness side) terminal D30-2
E04	• Short circuit to ground between: ECM – Wiring harness connector (wiring harness side) terminal D26-34 & Fuel Pressure Regulator – Wiring harness connector (wiring harness side) terminal D30-2
E05	• Circuit interruption between: ECM – Wiring harness connector (wiring harness side) terminal G88-5 & Main Relay – Socket Terminal E75-4
E06	• Circuit interruption between: ECM – Wiring harness connector (wiring harness side) terminal D26-4 & Fuel Pressure Regulator – Wiring harness connector (wiring harness side) terminal D30-1
E07	• Short circuit to ground between: ECM – Wiring harness connector (wiring harness side) terminal D26-4 & Fuel Pressure Regulator – Wiring harness connector (wiring harness side) terminal D30-1

C-20, Camshaft Position Sensor Circuit

Test Table (For RM413D)

Test	Work Order Description	Nominal Value
T01	Check: Interruption of Signal Circuit	
	• Ignition OFF • Disconnect wiring harness connector from: Camshaft Position Sensor • Ignition ON • Measure voltage between the following terminals: Camshaft Position Sensor – Wiring harness connector (wiring harness side) terminal C69-3 & Ground	4.8 ... 5.2 V
	Yes: T02	No: E06
T02	Check: Interruption of Signal Circuit	
	• Measure voltage between the following terminals: Camshaft Position Sensor – Wiring harness connector (wiring harness side) terminal C69-3 & Camshaft Position Sensor – Wiring harness connector (wiring harness side) terminal C69-1	4.8 ... 5.2 V
	Yes: T03	No: E05
T03	Check: Short to Voltage/Ground/Interruption of Signal Circuit	
	• Measure voltage between the following terminals: Camshaft Position Sensor – Wiring harness connector (wiring harness side) terminal C69-2 & Ground	4.8 ... 5.2 V
	Yes: T04	No: T05
T04	Check: Adjustment	
	• Check the following component for proper operation: Camshaft Position Sensor (intermittent problems, missing teeth, wrong reference point, incorrect gap position, etc.)	Test okay?
	Yes: E01	No: E02
T05	Check: Short to Voltage/Ground/Interruption of Signal Circuit	
	• Measure voltage between the following terminals: Camshaft Position Sensor – Wiring harness connector (wiring harness side) terminal C69-2 & Ground	greater than 5.2 V
	Yes: E03	No: E04

Result Table (For RM413D)

Result	Cause Of Fault
E01	• Defective component: Camshaft Position Sensor or ECM **NOTE:** • **The replacement of the components must be done in the listed order. The system must be checked for proper operation after every replacement.** • **If ECM is replaced, register vehicle specification into ECM by performing procedure described in "ECM registration" in Section 6E3.**
E02	• Repair the concerned circuit/component.
E03	• Short circuit to voltage between: ECM – Wiring harness connector (wiring harness side) terminal C66-56 & Camshaft Position Sensor – Wiring harness connector (wiring harness side) terminal C69-2 or • Defective component: ECM **NOTE:** **If ECM is replaced, register vehicle specification into ECM by performing procedure described in "ECM registration" in Section 6E3.**
E04	• Short circuit to ground/interruption of circuit between: ECM – Wiring harness connector (wiring harness side) terminal C66-56 & Camshaft Position Sensor – Wiring harness connector (wiring harness side) terminal C69-2 or • Defective component: ECM **NOTE:** **If ECM is replaced, register vehicle specification into ECM by performing procedure described in "ECM registration" in Section 6E3.**
E05	• Circuit interruption between: ECM – Wiring harness connector (wiring harness side) terminal C66-21 & Camshaft Position Sensor – Wiring harness connector (wiring harness side) terminal C69-1 or • Defective component: ECM **NOTE:** **If ECM is replaced, register vehicle specification into ECM by performing procedure described in "ECM registration" in Section 6E3.**

Result	Cause Of Fault
E06	• Circuit interruption between: ECM – Wiring harness connector (wiring harness side) terminal C66-25 & Camshaft Position Sensor – Wiring harness connector (wiring harness side) terminal C69-3 or • Defective component: ECM **NOTE:** **If ECM is replaced, register vehicle specification into ECM by performing procedure described in "ECM registration" in Section 6E3.**

Test Table (For RB413D)

Test	Work Order Description	Nominal Value
T01	Check: Interruption of Signal Circuit	4.8 ... 5.2 V
	• Ignition OFF • Disconnect wiring harness connector from: Camshaft Position Sensor • Ignition ON • Measure voltage between the following terminals: Camshaft Position Sensor – Wiring harness connector (wiring harness side) terminal D33-1 & Ground	
	Yes: T02	No: E06
T02	Check: Interruption of Signal Circuit	4.8 ... 5.2 V
	• Measure voltage between the following terminals: Camshaft Position Sensor – Wiring harness connector (wiring harness side) terminal D33-1 & Camshaft Position Sensor – Wiring harness connector (wiring harness side) terminal D33-3	
	Yes: T03	No: E05
T03	Check: Short to Voltage/Ground/Interruption of Signal Circuit	4.8 ... 5.2 V
	• Measure voltage between the following terminals: Camshaft Position Sensor – Wiring harness connector (wiring harness side) terminal D33-2 & Ground	
	Yes: T04	No: T05
T04	Check: Adjustment	Test okay?
	• Check the following component for proper operation: Camshaft Position Sensor (intermittent problems, missing teeth, wrong reference point, incorrect gap position, etc.)	
	Yes: E01	No: E02
T05	Check: Short to Voltage/Ground/Interruption of Signal Circuit	greater than 5.2 V
	• Measure voltage between the following terminals: Camshaft Position Sensor – Wiring harness connector (wiring harness side) terminal D33-2 & Ground	
	Yes: E03	No: E04

Result Table (For RB413D)

Result	Cause Of Fault
E01	• Defective component: Camshaft Position Sensor or ECM **NOTE:** **The replacement of the components must be done in the listed order.** **The system must be checked for proper operation after every replacement.** **NOTE:** **If ECM is replaced, register vehicle specification into ECM by performing procedure described in "ECM registration" in Section 6E3.**
E02	• Repair the concerned circuit/component.
E03	• Short circuit to voltage between: ECM – Wiring harness connector (wiring harness side) terminal D26-56 & Camshaft Position Sensor – Wiring harness connector (wiring harness side) terminal D33-2 or • Defective component: ECM **NOTE:** **If ECM is replaced, register vehicle specification into ECM by performing procedure described in "ECM registration" in Section 6E3.**
E04	• Short circuit to ground/interruption of circuit between: ECM – Wiring harness connector (wiring harness side) terminal D26-56 & Camshaft Position Sensor – Wiring harness connector (wiring harness side) terminal D33-2 or • Defective component: ECM **NOTE:** **If ECM is replaced, register vehicle specification into ECM by performing procedure described in "ECM registration" in Section 6E3.**
E05	• Circuit interruption between: ECM – Wiring harness connector (wiring harness side) terminal D26-21 & Camshaft Position Sensor – Wiring harness connector (wiring harness side) terminal D33-3 or • Defective component: ECM **NOTE:** **If ECM is replaced, register vehicle specification into ECM by performing procedure described in "ECM registration" in Section 6E3.**

Result	Cause Of Fault
E06	• Circuit interruption between: ECM – Wiring harness connector (wiring harness side) terminal D26-25 & Camshaft Position Sensor – Wiring harness connector (wiring harness side) terminal D33-1 or • Defective component: ECM **NOTE:** **If ECM is replaced, register vehicle specification into ECM by performing procedure described in "ECM registration" in Section 6E3.**

C-21, Brake Switch Circuit

Test Table (For RM413D)

Test	Work Order Description	Nominal Value
T01	Check: Short to Ground/Interruption of Voltage Supply Circuit	
	• Ignition OFF • Disconnect wiring harness connector from: Brake Light Switch • Measure voltage between the following terminals: Brake Light Switch – Wiring harness connector (wiring harness side) terminal E36-1 & Ground	greater than 11 V
	Yes: T02	No: T10
T02	Check: Short to Ground/Interruption of Voltage Supply Circuit	
	• Measure voltage between the following terminals: Brake Light Switch – Wiring harness connector (wiring harness side) terminal E36-4 & Ground	greater than 11 V
	Yes: T03	No: E08
T03	Check: Short to Voltage of Signal Circuit	
	• Ignition ON • Measure voltage between the following terminals: Brake Light Switch – Wiring harness connector (wiring harness side) terminal E36-3 & Ground	less than 0.3 V
	Yes: T04	No: E07
T04	Check: Short to Voltage of Voltage Supply Circuit	
	• Measure voltage between the following terminals: Brake Light Switch – Wiring harness connector (wiring harness side) terminal E36-2 & Ground	less than 0.3 V
	Yes: T05	No: T09
T05	Check: Component	
	• Scan Tool Data List Parameter Brake Switch	OFF
	Yes: T06	No: E03
T06	Check: Interruption of Signal Circuit	
	• Connect fused jumper wire to: Brake Light Switch – Wiring harness connector (wiring harness side) terminal E36-2 & Battery voltage • Scan Tool Data List Parameter Brake Switch	ON
	Yes: T07	No: E04

Test	Work Order Description	Nominal Value
T07	Check: Component	
	• Remove fused jumper wire • Ignition OFF • Disconnect harness connector from: ECM • Ignition ON • Measure voltage between the following terminals • ECM – Wiring harness connector (wiring harness connector side) terminal E27-68 & Ground	less than 0.3 V
	Yes: T08	No: E03
T08	Check: Interruption of Signal Circuit	
	• Connect fused jumper wire to: Brake Light Switch – Wiring harness connector (wiring harness side) terminal E36-3 & Battery voltage • Measure voltage between the following terminals ECM – Wiring harness connector (wiring harness side) terminal E27-68 & Ground	greater than 11 V
	Yes: E01	No: E02
T09	Check: Component	
	• Ignition OFF • Disconnect wiring harness connector from: ECM • Ignition ON • Measure voltage between the following terminals: Brake Light Switch – Wiring harness connector (wiring harness side) terminal E36-2 & Ground • Disconnect each of the following components/control units consecutively from the wiring harness and repeat the measurement each time: – ABS Control Module – Rear Combination Lamp (Left) – Rear Combination Lamp (Right) – High Mount Stop Light	less than 0.3 V
	Yes: E05	No: E06
T10	Check: Short to Ground/Interruption of Voltage Supply Circuit	
	• Remove electrical component from socket: Circuit Fuse • Check the following component for proper operation: Circuit Fuse	Test okay?
	Yes: T11	No: T12

Test	Work Order Description	Nominal Value
T11	Check: Interruption of Voltage Supply Circuit	
	• Measure voltage between the following terminals: Circuit Fuse – Input contact & Ground	greater than 11 V
	Yes: E09	No: E10
T12	Check: Short to Ground of Voltage Supply Circuit	
	• Disconnect wiring harness connector from: ECM • Connect fused jumper wire to: Brake Light Switch – Wiring harness connector (wiring harness side) terminal E36-1 & Battery voltage • Check the following component for proper operation: Fuse of the fused jumper wire	Test okay?
	Yes: T13	No: E14
T13	Check: Short to Ground of Voltage Supply Circuit	
	• Remove fused jumper wire • Connect wiring harness connector to: ECM • Connect fused jumper wire to: Brake Light Switch – Wiring harness connector (wiring harness side) terminal E36-3 & Battery voltage • Check the following component for proper operation: Fuse of the fused jumper wire	Test okay?
	Yes: T14	No: E13
T14	Check: Short to Ground of Voltage Supply Circuit	
	• Remove fused jumper wire • Connect fused jumper wire to: Brake Light Switch – Wiring harness connector (wiring harness side) terminal E36-2 & Battery voltage • Check the following component for proper operation: Fuse of the fused jumper wire	Test okay?
	Yes: E11	No: T15

Test	Work Order Description	Nominal Value
T15	Check: Component	
	• Disconnect wiring harness connector from: Rear Combination Lamp (Left) • Insert new fuse into the socket of the fused jumper wire and then check this fuse for proper operation • Disconnect each of the following components/control units consecutively from the wiring harness and repeat the measurement each time: – Rear Combination Lamp (Right) – ABS Control Module – ECM – High Mount Stop Lamp	Test okay?
	Yes: E05	No: E12

Result Table (For RM413D)

Result	Cause Of Fault
E01	• Defective component: Brake Light Switch or ECM **NOTE:** • **The replacement of the components must be done in the listed order.** **The system must be checked for proper operation after every replacement.** • **If ECM is replaced, register vehicle specification into ECM by performing procedure described in "ECM registration" in Section 6E3.**
E02	• Circuit interruption between: Brake Light Switch – Wiring harness connector (wiring harness side) terminal E36-3 & ECM – Wiring harness connector (wiring harness side) terminal E27-68
E03	• Short circuit to voltage between: Brake Light Switch – Wiring harness connector (wiring harness side) terminal E36-3 & ECM – Wiring harness connector (wiring harness side) terminal E27-68
E04	• Circuit interruption between: Brake Light Switch – Wiring harness connector (wiring harness side) terminal E36-2 & ECM – Wiring harness connector (wiring harness side) terminal E27-81 or • Defective component: ECM **NOTE:** **If ECM is replaced, register vehicle specification into ECM by performing procedure described in "ECM registration" in Section 6E3.**
E05	• If the nominal value is reached during one of the measurements, the component/control unit that has been disconnected immediately before that measurement is defective.
E06	• Short circuit to voltage between: Brake Light Switch – Wiring harness connector (wiring harness side) terminal E36-2 & ABS Control Module – Wiring harness connector (wiring harness side) terminal E43-3 & ECM – Wiring harness connector (wiring harness side) terminal E27-81 & Rear Combination Lamp (Left) – Wiring harness connector (wiring harness side) terminal L02-4 & Rear Combination Lamp (Right) – Wiring harness connector (wiring harness side) terminal L01-4 & High Mount Stop Light – Wiring harness connector (wiring harness side) terminal O02-1

Result	Cause Of Fault
E07	• Short circuit to voltage between: ECM – Wiring harness connector (wiring harness side) terminal E27-68 & Brake Light Switch – Wiring harness connector (wiring harness side) terminal E36-3 or • Defective component: ECM **NOTE:** **If ECM is replaced, register vehicle specification into ECM by performing procedure described in "ECM registration" in Section 6E3.**
E08	• Circuit interruption between: Circuit Fuse – Output contact & Brake Light Switch – Wiring harness connector (wiring harness side) terminal E36-4
E09	• Circuit interruption between: Circuit Fuse – Output contact & Brake Light Switch – Wiring harness connector (wiring harness side) terminal E36-1
E10	• Circuit interruption between: Circuit Main Fuse – Output contact & Circuit Fuse – Input contact
E11	• Defective component: Brake Light Switch
E12	• Short circuit to ground between: Brake Light Switch – Wiring harness connector (wiring harness side) terminal E36-2 & ABS Control Module – Wiring harness connector (wiring harness side) terminal E43-3 & ECM – Wiring harness connector (wiring harness side) terminal E27-81 & Rear Combination Lamp (Left) – Wiring harness connector (wiring harness side) terminal L02-4 & Rear Combination Lamp (Right) – Wiring harness connector (wiring harness side) terminal L01-4 & High Mount Stop Light – Wiring harness connector (wiring harness side) terminal O02-1
E13	• Short circuit to ground between: Brake Light Switch – Wiring harness connector (wiring harness side) terminal E36-3 & ECM – Wiring harness connector (wiring harness side) terminal E27-68 or • Defective component: ECM **NOTE:** **If ECM is replaced, register vehicle specification into ECM by performing procedure described in "ECM registration" in Section 6E3.**

Result	Cause Of Fault
E14	• Short circuit to ground between: Circuit Fuse – Output contact & Brake Light Switch – Wiring harness connector (wiring harness side) terminal E36-1, E36-4 & ECM – Wiring harness connector (wiring harness side) terminal E27-50

Test Table (For RB413D)

Test	Work Order Description	Nominal Value
T01	Check: Short to Ground/Interruption of Voltage Supply Circuit	greater than 11 V
	• Ignition OFF • Disconnect wiring harness connector from: Brake Light Switch • Measure voltage between the following terminals: Brake Light Switch – Wiring harness connector (wiring harness side) terminal G15-1 & Ground	
	Yes: T02	No: T10
T02	Check: Short to Ground/Interruption of Voltage Supply Circuit	greater than 11 V
	• Measure voltage between the following terminals: Brake Light Switch – Wiring harness connector (wiring harness side) terminal G15-2 & Ground	
	Yes: T03	No: E08
T03	Check: Short to Voltage of Signal Circuit	less than 0.3 V
	• Ignition ON • Measure voltage between the following terminals: Brake Light Switch – Wiring harness connector (wiring harness side) terminal G15-4 & Ground	
	Yes: T04	No: E07
T04	Check: Short to Voltage of Voltage Supply Circuit	less than 0.3 V
	• Measure voltage between the following terminals: Brake Light Switch – Wiring harness connector (wiring harness side) terminal G15-3 & Ground	
	Yes: T05	No: T09
T05	Check: Component	OFF
	• Scan Tool Data List Parameter Brake Switch	
	Yes: T06	No: E03
T06	Check: Interruption of Signal Circuit	ON
	• Connect fused jumper wire to: Brake Light Switch – Wiring harness connector (wiring harness side) terminal G15-3 & Battery voltage • Scan Tool Data List Parameter Brake Switch	
	Yes: T07	No: E04

Test	Work Order Description	Nominal Value
T07	Check: Component	
	• Remove fused jumper wire • Ignition OFF • Disconnect harness connector from: ECM • Ignition ON • Measure voltage between the following terminals • ECM – Wiring harness connector (wiring harness connector side) terminal G88-68 & Ground	less than 0.3 V
	Yes: T08	No: E03
T08	Check: Interruption of Signal Circuit	
	• Connect fused jumper wire to: Brake Light Switch – Wiring harness connector (wiring harness side) terminal G15-4 & Battery voltage • Measure voltage between the following terminals ECM – Wiring harness connector (wiring harness side) terminal G88-68 & Ground	greater than 11 V
	Yes: E01	No: E02
T09	Check: Component	
	• Ignition OFF • Disconnect wiring harness connector from: ECM • Ignition ON • Measure voltage between the following terminals: Brake Light Switch – Wiring harness connector (wiring harness side) terminal G15-3 & Ground • Disconnect each of the following components/control units consecutively from the wiring harness and repeat the measurement each time: – ABS Control Module – Rear Combination Lamp (Left) – Rear Combination Lamp (Right) – High Mount Stop Light	less than 0.3 V
	Yes: E05	No: E06
T10	Check: Short to Ground/Interruption of Voltage Supply Circuit	
	• Remove electrical component from socket: Circuit Fuse • Check the following component for proper operation: Circuit Fuse	Test okay?
	Yes: T11	No: T12

Test	Work Order Description	Nominal Value
T11	Check: Interruption of Voltage Supply Circuit	
	• Measure voltage between the following terminals: Circuit Fuse – Input contact & Ground	greater than 11 V
	Yes: E09	No: E10
T12	Check: Short to Ground of Voltage Supply Circuit	
	• Disconnect wiring harness connector from: ECM • Connect fused jumper wire to: Brake Light Switch – Wiring harness connector (wiring harness side) terminal G15-1 & Battery voltage • Check the following component for proper operation: Fuse of the fused jumper wire	Test okay?
	Yes: T13	No: E14
T13	Check: Short to Ground of Voltage Supply Circuit	
	• Remove fused jumper wire • Connect wiring harness connector to: ECM • Connect fused jumper wire to: Brake Light Switch – Wiring harness connector (wiring harness side) terminal G15-4 & Battery voltage • Check the following component for proper operation: Fuse of the fused jumper wire	Test okay?
	Yes: T14	No: E13
T14	Check: Short to Ground of Voltage Supply Circuit	
	• Remove fused jumper wire • Connect fused jumper wire to: Brake Light Switch – Wiring harness connector (wiring harness side) terminal G15-3 & Battery voltage • Check the following component for proper operation: Fuse of the fused jumper wire	Test okay?
	Yes: E11	No: T15

Test	Work Order Description	Nominal Value
T15	Check: Component	
	• Disconnect wiring harness connector from: Rear Combination Lamp (Left) • Insert new fuse into the socket of the fused jumper wire and then check this fuse for proper operation • Disconnect each of the following components/control units consecutively from the wiring harness and repeat the measurement each time: – Rear Combination Lamp (Right) – ABS Control Module – ECM – High Mount Stop Lamp	Test okay?
	Yes: E05	No: E12

Result Table (For RB413D)

Result	Cause Of Fault
E01	• Defective component: Brake Light Switch or ECM **NOTE:** • **The replacement of the components must be done in the listed order. The system must be checked for proper operation after every replacement.** • **If ECM is replaced, register vehicle specification into ECM by performing procedure described in "ECM registration" in Section 6E3.**
E02	• Circuit interruption between: Brake Light Switch – Wiring harness connector (wiring harness side) terminal G15-4 & ECM – Wiring harness connector (wiring harness side) terminal G88-68
E03	• Short circuit to voltage between: Brake Light Switch – Wiring harness connector (wiring harness side) terminal G15-4 & ECM – Wiring harness connector (wiring harness side) terminal G88-68
E04	• Circuit interruption between: Brake Light Switch – Wiring harness connector (wiring harness side) terminal G15-3 & ECM – Wiring harness connector (wiring harness side) terminal G88-81 or • Defective component: ECM **NOTE:** **If ECM is replaced, register vehicle specification into ECM by performing procedure described in "ECM registration" in Section 6E3.**
E05	• If the nominal value is reached during one of the measurements, the component/control unit that has been disconnected immediately before that measurement is defective.
E06	• Short circuit to voltage between: Brake Light Switch – Wiring harness connector (wiring harness side) terminal G15-3 & ABS Control Module – Wiring harness connector (wiring harness side) terminal E20-3 & ECM – Wiring harness connector (wiring harness side) terminal G88-81 & Rear Combination Lamp (Left) – Wiring harness connector (wiring harness side) terminal L12-6 & Rear Combination Lamp (Right) – Wiring harness connector (wiring harness side) terminal L01-6 & High Mount Stop Light – Wiring harness connector (wiring harness side) terminal O03-1 (door-mounted) or O08-1 (spoiler built-in)

Result	Cause Of Fault
E07	• Short circuit to voltage between: ECM – Wiring harness connector (wiring harness side) terminal G88-68 & Brake Light Switch – Wiring harness connector (wiring harness side) terminal G15-4 or • Defective component: ECM **NOTE:** **If ECM is replaced, register vehicle specification into ECM by performing procedure described in "ECM registration" in Section 6E3.**
E08	• Circuit interruption between: Circuit Fuse – Output contact & Brake Light Switch – Wiring harness connector (wiring harness side) terminal G15-2
E09	• Circuit interruption between: Circuit Fuse – Output contact & Brake Light Switch – Wiring harness connector (wiring harness side) terminal G15-1
E10	• Circuit interruption between: Circuit Main Fuse – Output contact & Circuit Fuse – Input contact
E11	• Defective component: Brake Light Switch
E12	• Short circuit to ground between: Brake Light Switch – Wiring harness connector (wiring harness side) terminal G15-3 & ABS Control Module – Wiring harness connector (wiring harness side) terminal E20-3 & ECM – Wiring harness connector (wiring harness side) terminal G88-81 & Rear Combination Lamp (Left) – Wiring harness connector (wiring harness side) terminal L12-6 & Rear Combination Lamp (Right) – Wiring harness connector (wiring harness side) terminal L01-6 & High Mount Stop Light – Wiring harness connector (wiring harness side) terminal O03-1 (door-mounted) or O08-1 (spoiler built-in)
E13	• Short circuit to ground between: Brake Light Switch – Wiring harness connector (wiring harness side) terminal G15-4 & ECM – Wiring harness connector (wiring harness side) terminal G88-68 or • Defective component: ECM **NOTE:** **If ECM is replaced, register vehicle specification into ECM by performing procedure described in "ECM registration" in Section 6E3.**

Result	Cause Of Fault
E14	• Short circuit to ground between: Circuit Fuse – Output contact & Brake Light Switch – Wiring harness connector (wiring harness side) terminal G15-1, G15-2

C-22, Clutch Switch Circuit

Test Table (For RM413D)

Test	Work Order Description	Nominal Value
T01	Check: Interruption of Signal Circuit	
	• Ignition OFF • Disconnect wiring harness connector from: Clutch Switch • Ignition ON • Measure voltage between the following terminals: Clutch Switch – Wiring harness connector (wiring harness side) terminal E48-2 & Ground	greater than 11 V
	Yes: T02	No: E04
T02	Check: Short to Ground of Signal Circuit	
	• Ignition OFF • Disconnect harness connector from: ECM • Ignition ON • Measure voltage between the following terminals ECM – Wiring harness connector (wiring harness side) terminal E27-22 & Ground	less than 0.3 V
	Yes: T03	No: E03
T03	Check: Short to Voltage/Interruption of Signal Circuit	
	• Ignition OFF • Connect fused jumper wire to: Clutch Switch – Wiring harness connector (wiring harness side) terminal E48-1 & Clutch Switch – Wiring harness connector (wiring harness side) terminal E48-2 • Ignition ON • Measure voltage between the following terminals ECM – Wiring harness connector (wiring harness side) terminal E27-22 & Ground	greater than 11 V
	Yes: E01	No: E02

Result Table (For RM413D)

Result	Cause Of Fault
E01	• Defective component: Clutch Switch or ECM **NOTE:** • **The replacement of the components must be done in the listed order. The system must be checked for proper operation after every replacement.** • **If ECM is replaced, register vehicle specification into ECM by performing procedure described in "ECM registration" in Section 6E3.**
E02	• Circuit interruption between: Clutch Switch – Wiring harness connector (wiring harness side) terminal E48-1 & ECM – Wiring harness connector (wiring harness side) terminal E27-22
E03	• Short circuit to voltage between: Clutch Switch – Wiring harness connector (wiring harness side) terminal E48-1 & ECM – Wiring harness connector (wiring harness side) terminal E27-22 or • Defective component: ECM **NOTE:** **If ECM is replaced, register vehicle specification into ECM by performing procedure described in "ECM registration" in Section 6E3.**
E04	• Circuit interruption between: Circuit Fuse – Output contact & Clutch Switch – Wiring harness connector (wiring harness side) terminal E48-2

Test Table (For RB413D)

Test	Work Order Description	Nominal Value
T01	Check: Interruption of Signal Circuit	
	• Ignition OFF • Disconnect wiring harness connector from: Clutch Switch • Ignition ON • Measure voltage between the following terminals: Clutch Switch – Wiring harness connector (wiring harness side) terminal G85-2 & Ground	greater than 11 V
	Yes: T02	No: E04
T02	Check: Short to Ground of Signal Circuit	
	• Ignition OFF • Disconnect harness connector from: ECM • Ignition ON • Measure voltage between the following terminals ECM – Wiring harness connector (wiring harness side) terminal G88-22 & Ground	less than 0.3 V
	Yes: T03	No: E03
T03	Check: Short to Voltage/Interruption of Signal Circuit	
	• Ignition OFF • Connect fused jumper wire to: Clutch Switch – Wiring harness connector (wiring harness side) terminal G85-1 & Clutch Switch – Wiring harness connector (wiring harness side) terminal G85-2 • Ignition ON • Measure voltage between the following terminals ECM – Wiring harness connector (wiring harness side) terminal G88-22 & Ground	greater than 11 V
	Yes: E01	No: E02

Result Table (For RB413D)

Result	Cause Of Fault
E01	• Defective component: Clutch Switch or ECM **NOTE:** • **The replacement of the components must be done in the listed order. The system must be checked for proper operation after every replacement.** • **If ECM is replaced, register vehicle specification into ECM by performing procedure described in "ECM registration" in Section 6E3.**
E02	• Circuit interruption between: Clutch Switch – Wiring harness connector (wiring harness side) terminal G85-1 & ECM – Wiring harness connector (wiring harness side) terminal G85-22
E03	• Short circuit to voltage between: Clutch Switch – Wiring harness connector (wiring harness side) terminal G85-1 & ECM – Wiring harness connector (wiring harness side) terminal G88-22 or • Defective component: ECM **NOTE:** **If ECM is replaced, register vehicle specification into ECM by performing procedure described in "ECM registration" in Section 6E3.**
E04	• Circuit interruption between: Circuit Fuse – Output contact & Clutch Switch – Wiring harness connector (wiring harness side) terminal G85-2

C-23, Injector Circuit

Result Table

Result	Cause Of Fault
E01	• Defective component: ECM **NOTE:** **If ECM is replaced, register vehicle specification into ECM by performing procedure described in "ECM registration" in Section 6E3.**

C-24, Cylinder 1 Injector Circuit

Test Table (For RM413D)

Test	Work Order Description	Nominal Value
T01	Check: Diagnostic Trouble Code stored	
	Is the following Diagnostic Trouble Code stored? P0201 – Injector Circuit Malfunction Cylinder-1	
	Yes: E01	No: T02
T02	Check: Short to Voltage of Signal Circuit	
	• Ignition OFF • Disconnect wiring harness connector from: ECM (Wiring Harness Connector C66) • Ignition ON • Measure voltage between: ECM – Wiring harness connector (wiring harness side) terminal C66-47 & Ground	less than 0.3 V
	Yes: T03	No: E07
T03	Check: Short to Ground of Signal Circuit	
	• Ignition OFF • Measure resistance between: ECM – Wiring harness connector (wiring harness side) terminal C66-47 & Ground	greater than 500 kOhm
	Yes: T04	No: T07
T04	Check: Interruption of Signal Circuit	
	• Disconnect wiring harness connector from: Cylinder 1 Injector • Measure resistance between: ECM – Wiring harness connector (wiring harness side) terminal C66-16 & Cylinder 1 Injector – Wiring harness connector (wiring harness side) terminal C93-2	less than 5 Ohm
	Yes: T05	No: E04
T05	Check: Interruption of Signal Circuit	
	• Measure resistance between: ECM – Wiring harness connector (wiring harness side) terminal C66-47 & Cylinder 1 Injector – Wiring harness connector (wiring harness side) terminal C93-1	less than 5 Ohm
	Yes: T06	No: E03
T06	Check: Component	
	• Measure resistance between: Cylinder 1 Injector – Wiring harness connector (component side) terminal C93-1 & Cylinder 1 Injector – Wiring harness connector (component side) terminal C93-2	less than 3 Ohm
	Yes: E02	No: E01

Test	Work Order Description	Nominal Value
T07	Check: Short to Ground of Signal Circuit	
	• Disconnect wiring harness connector from: Cylinder 1 Injector • Measure resistance between: ECM – Wiring harness connector (wiring harness side) terminal C66-47 & Ground	greater than 500 kOhm
	Yes: E05	No: E06

Result Table (For RM413D)

Result	Cause Of Fault
E01	• Defective component: Cylinder 1 Injector **NOTE:** **If an injector has been replaced, the fuel injector calibration code of the new injector must be programmed to the ECM referring to "ECM registration" in Section 6E3.**
E02	• Defective component: ECM **NOTE:** **If ECM is replaced, register vehicle specification into ECM by performing procedure described in "ECM registration" in Section 6E3.**
E03	• Circuit interruption between: ECM – Wiring harness connector (wiring harness side) terminal C66-47 & Cylinder 1 Injector – Wiring harness connector (wiring harness side) terminal C93-1
E04	• Circuit interruption between: ECM – Wiring harness connector (wiring harness side) terminal C66-16 & Cylinder 1 Injector – Wiring harness connector (wiring harness side) terminal C93-2
E05	• Short circuit to ground between: Cylinder 1 Injector – Wiring harness connector (wiring harness side) terminal C93-2 & ECM – Wiring harness connector (wiring harness side) terminal C66-16 or • Defective component: Cylinder 1 Injector **NOTE:** **If an injector has been replaced, the fuel injector calibration code of the new injector must be programmed to the ECM referring to "ECM registration" in Section 6E3.**
E06	• Short circuit to ground between: Cylinder 1 Injector – Wiring harness connector (wiring harness side) terminal C93-1 & ECM – Wiring harness connector (wiring harness side) terminal C66-47
E07	• Short circuit to voltage between: Cylinder 1 Injector – Wiring harness connector (wiring harness side) terminal C93-1 & ECM – Wiring harness connector (wiring harness side) terminal C66-47 or • Short circuit to voltage between: Cylinder 1 Injector – Wiring harness connector (wiring harness side) terminal C93-2 & ECM – Wiring harness connector (wiring harness side) terminal C66-16

Test Table (For RB413D)

Test	Work Order Description	Nominal Value
T01	Check: Diagnostic Trouble Code stored	
	Is the following Diagnostic Trouble Code stored? P0201 – Injector Circuit Malfunction Cylinder-1	
	Yes: E01	No: T02
T02	Check: Short to Voltage of Signal Circuit	
	• Ignition OFF • Disconnect wiring harness connector from: ECM (Wiring Harness Connector D26) • Ignition ON • Measure voltage between: ECM – Wiring harness connector (wiring harness side) terminal D26-47 & Ground	less than 0.3 V
	Yes: T03	No: E07
T03	Check: Short to Ground of Signal Circuit	
	• Ignition OFF • Measure resistance between: ECM – Wiring harness connector (wiring harness side) terminal D26-47 & Ground	greater than 500 kOhm
	Yes: T04	No: T07
T04	Check: Interruption of Signal Circuit	
	• Disconnect wiring harness connector from: Cylinder 1 Injector • Measure resistance between: ECM – Wiring harness connector (wiring harness side) terminal D26-16 & Cylinder 1 Injector – Wiring harness connector (wiring harness side) terminal D38-2	less than 5 Ohm
	Yes: T05	No: E04
T05	Check: Interruption of Signal Circuit	
	• Measure resistance between: ECM – Wiring harness connector (wiring harness side) terminal D26-47 & Cylinder 1 Injector – Wiring harness connector (wiring harness side) terminal D38-1	less than 5 Ohm
	Yes: T06	No: E03
T06	Check: Component	
	• Measure resistance between: Cylinder 1 Injector – Wiring harness connector (component side) terminal D38-1 & Cylinder 1 Injector – Wiring harness connector (component side) terminal D38-2	less than 3 Ohm
	Yes: E02	No: E01

Test	Work Order Description	Nominal Value
T07	Check: Short to Ground of Signal Circuit	
	• Disconnect wiring harness connector from: Cylinder 1 Injector • Measure resistance between: ECM – Wiring harness connector (wiring harness side) terminal D26-47 & Ground	greater than 500 kOhm
	Yes: E05	No: E06

Result Table (For RB413D)

Result	Cause Of Fault
E01	• Defective component: Cylinder 1 Injector **NOTE:** **If an injector has been replaced, the fuel injector calibration code of the new injector must be programmed to the ECM referring to "ECM registration" in Section 6E3.**
E02	• Defective component: ECM **NOTE:** **If ECM is replaced, register vehicle specification into ECM by performing procedure described in "ECM registration" in Section 6E3.**
E03	• Circuit interruption between: ECM – Wiring harness connector (wiring harness side) terminal D26-47 & Cylinder 1 Injector – Wiring harness connector (wiring harness side) terminal D38-1
E04	• Circuit interruption between: ECM – Wiring harness connector (wiring harness side) terminal D26-16 & Cylinder 1 Injector – Wiring harness connector (wiring harness side) terminal D38-2
E05	• Short circuit to ground between: Cylinder 1 Injector – Wiring harness connector (wiring harness side) terminal D38-2 & ECM – Wiring harness connector (wiring harness side) terminal D26-16 or • Defective component: Cylinder 1 Injector **NOTE:** **If an injector has been replaced, the fuel injector calibration code of the new injector must be programmed to the ECM referring to "ECM registration" in Section 6E3.**
E06	• Short circuit to ground between: Cylinder 1 Injector – Wiring harness connector (wiring harness side) terminal D38-1 & ECM – Wiring harness connector (wiring harness side) terminal D26-47
E07	• Short circuit to voltage between: Cylinder 1 Injector – Wiring harness connector (wiring harness side) terminal D38-1 & ECM – Wiring harness connector (wiring harness side) terminal D26-47 or • Short circuit to voltage between: Cylinder 1 Injector – Wiring harness connector (wiring harness side) terminal D38-2 & ECM – Wiring harness connector (wiring harness side) terminal D26-16

C-25, Cylinder 2 Injector Circuit

Test Table (For RM413D)

Test	Work Order Description	Nominal Value
T01	Check: Diagnostic Trouble Code stored	
	Is the following Diagnostic Trouble Code stored? P0202 – Injector Circuit Malfunction Cylinder-2	
	Yes: E01	No: T02
T02	Check: Short to Voltage of Signal Circuit	
	• Ignition OFF • Disconnect wiring harness connector from: ECM (Wiring Harness Connector C66) • Ignition ON • Measure voltage between: ECM – Wiring harness connector (wiring harness side) terminal C66-49 & Ground	less than 0.3 V
	Yes: T03	No: E07
T03	Check: Short to Ground of Signal Circuit	
	• Ignition OFF • Measure resistance between: ECM – Wiring harness connector (wiring harness side) terminal C66-49 & Ground	greater than 500 kOhm
	Yes: T04	No: T07
T04	Check: Interruption of Signal Circuit	
	• Disconnect wiring harness connector from: Cylinder 2 Injector • Measure resistance between: ECM – Wiring harness connector (wiring harness side) terminal C66-17 & Cylinder 2 Injector – Wiring harness connector (wiring harness side) terminal C94-2	less than 5 Ohm
	Yes: T05	No: E04
T05	Check: Interruption of Signal Circuit	
	• Measure resistance between: ECM – Wiring harness connector (wiring harness side) terminal C66-49 & Cylinder 2 Injector – Wiring harness connector (wiring harness side) terminal C94-1	less than 5 Ohm
	Yes: T06	No: E03
T06	Check: Component	
	• Measure resistance between: Cylinder 2 Injector – Wiring harness connector (component side) terminal C94-1 & Cylinder 2 Injector – Wiring harness connector (component side) terminal C94-2	less than 3 Ohm
	Yes: E02	No: E01

Test	Work Order Description	Nominal Value
T07	Check: Short to Ground of Signal Circuit	
	• Disconnect wiring harness connector from: Cylinder 2 Injector • Measure resistance between: ECM – Wiring harness connector (wiring harness side) terminal C66-49 & Ground	greater than 500 kOhm
	Yes: E05	No: E06

Result Table (For RM413D)

Result	Cause Of Fault
E01	• Defective component: Cylinder 2 Injector **NOTE:** **If an injector has been replaced, the fuel injector calibration code of the new injector must be programmed to the ECM referring to "ECM registration" in Section 6E3.**
E02	• Defective component: ECM **NOTE:** **If ECM is replaced, register vehicle specification into ECM by performing procedure described in "ECM registration" in Section 6E3.**
E03	• Circuit interruption between: ECM – Wiring harness connector (wiring harness side) terminal C66-49 & Cylinder 2 Injector – Wiring harness connector (wiring harness side) terminal C94-1
E04	• Circuit interruption between: ECM – Wiring harness connector (wiring harness side) terminal C66-17 & Cylinder 2 Injector – Wiring harness connector (wiring harness side) terminal C94-2
E05	• Short circuit to ground between: Cylinder 2 Injector – Wiring harness connector (wiring harness side) terminal C94-2 & ECM – Wiring harness connector (wiring harness side) terminal C66-17 or • Defective component: Cylinder 2 Injector **NOTE:** **If an injector has been replaced, the fuel injector calibration code of the new injector must be programmed to the ECM referring to "ECM registration" in Section 6E3.**
E06	• Short circuit to ground between: Cylinder 2 Injector – Wiring harness connector (wiring harness side) terminal C94-1 & ECM – Wiring harness connector (wiring harness side) terminal C66-49
E07	• Short circuit to voltage between: Cylinder 2 Injector – Wiring harness connector (wiring harness side) terminal C94-1 & ECM – Wiring harness connector (wiring harness side) terminal C66-49 or • Short circuit to voltage between: Cylinder 2 Injector – Wiring harness connector (wiring harness side) terminal C94-2 & ECM – Wiring harness connector (wiring harness side) terminal C66-17

Test Table (For RB413D)

Test	Work Order Description	Nominal Value
T01	Check: Diagnostic Trouble Code stored	
	Is the following Diagnostic Trouble Code stored? P0202 – Injector Circuit Malfunction Cylinder-2	
	Yes: E01	No: T02
T02	Check: Short to Voltage of Signal Circuit	
	• Ignition OFF • Disconnect wiring harness connector from: ECM (Wiring Harness Connector D26) • Ignition ON • Measure voltage between: ECM – Wiring harness connector (wiring harness side) terminal D26-49 & Ground	less than 0.3 V
	Yes: T03	No: E07
T03	Check: Short to Ground of Signal Circuit	
	• Ignition OFF • Measure resistance between: ECM – Wiring harness connector (wiring harness side) terminal D26-49 & Ground	greater than 500 kOhm
	Yes: T04	No: T07
T04	Check: Interruption of Signal Circuit	
	• Disconnect wiring harness connector from: Cylinder 2 Injector • Measure resistance between: ECM – Wiring harness connector (wiring harness side) terminal D26-17 & Cylinder 2 Injector – Wiring harness connector (wiring harness side) terminal D39-2	less than 5 Ohm
	Yes: T05	No: E04
T05	Check: Interruption of Signal Circuit	
	• Measure resistance between: ECM – Wiring harness connector (wiring harness side) terminal D26-49 & Cylinder 2 Injector – Wiring harness connector (wiring harness side) terminal D39-1	less than 5 Ohm
	Yes: T06	No: E03
T06	Check: Component	
	• Measure resistance between: Cylinder 2 Injector – Wiring harness connector (component side) terminal D39-1 & Cylinder 2 Injector – Wiring harness connector (component side) terminal D39-2	less than 3 Ohm
	Yes: E02	No: E01

Test	Work Order Description	Nominal Value
T07	Check: Short to Ground of Signal Circuit	
	• Disconnect wiring harness connector from: Cylinder 2 Injector • Measure resistance between: ECM – Wiring harness connector (wiring harness side) terminal D26-49 & Ground	greater than 500 kOhm
	Yes: E05	No: E06

Result Table (For RB413D)

Result	Cause Of Fault
E01	• Defective component: Cylinder 2 Injector **NOTE:** **If an injector has been replaced, the fuel injector calibration code of the new injector must be programmed to the ECM referring to "ECM registration" in Section 6E3.**
E02	• Defective component: ECM **NOTE:** **If ECM is replaced, register vehicle specification into ECM by performing procedure described in "ECM registration" in Section 6E3.**
E03	• Circuit interruption between: ECM – Wiring harness connector (wiring harness side) terminal D26-49 & Cylinder 2 Injector – Wiring harness connector (wiring harness side) terminal D39-1
E04	• Circuit interruption between: ECM – Wiring harness connector (wiring harness side) terminal D26-17 & Cylinder 2 Injector – Wiring harness connector (wiring harness side) terminal D39-2
E05	• Short circuit to ground between: Cylinder 2 Injector – Wiring harness connector (wiring harness side) terminal D39-2 & ECM – Wiring harness connector (wiring harness side) terminal D26-17 or • Defective component: Cylinder 2 Injector **NOTE:** **If an injector has been replaced, the fuel injector calibration code of the new injector must be programmed to the ECM referring to "ECM registration" in Section 6E3.**
E06	• Short circuit to ground between: Cylinder 2 Injector – Wiring harness connector (wiring harness side) terminal D39-1 & ECM – Wiring harness connector (wiring harness side) terminal D26-49
E07	• Short circuit to voltage between: Cylinder 2 Injector – Wiring harness connector (wiring harness side) terminal D39-1 & ECM – Wiring harness connector (wiring harness side) terminal D26-49 or • Short circuit to voltage between: Cylinder 2 Injector – Wiring harness connector (wiring harness side) terminal D39-2 & ECM – Wiring harness connector (wiring harness side) terminal D26-17

C-26, Cylinder 3 Injector Circuit

Test Table (For RM413D)

Test	Work Order Description	Nominal Value
T01	Check: Diagnostic Trouble Code stored	
	Is the following Diagnostic Trouble Code stored? P0203 – Injector Circuit Malfunction Cylinder-3	
	Yes: E01	No: T02
T02	Check: Short to Voltage of Signal Circuit	
	• Ignition OFF • Disconnect wiring harness connector from: ECM (Wiring Harness Connector C66) • Ignition ON • Measure voltage between: ECM – Wiring harness connector (wiring harness side) terminal C66-48 & Ground	less than 0.3 V
	Yes: T03	No: E07
T03	Check: Short to Ground of Signal Circuit	
	• Ignition OFF • Measure resistance between: ECM – Wiring harness connector (wiring harness side) terminal C66-48 & Ground	greater than 500 kOhm
	Yes: T04	No: T07
T04	Check: Interruption of Signal Circuit	
	• Disconnect wiring harness connector from: Cylinder 3 Injector • Measure resistance between: ECM – Wiring harness connector (wiring harness side) terminal C66-31 & Cylinder 3 Injector – Wiring harness connector (wiring harness side) terminal C95-2	less than 5 Ohm
	Yes: T05	No: E04
T05	Check: Interruption of Signal Circuit	
	• Measure resistance between: ECM – Wiring harness connector (wiring harness side) terminal C66-48 & Cylinder 3 Injector – Wiring harness connector (wiring harness side) terminal C95-1	less than 5 Ohm
	Yes: T06	No: E03
T06	Check: Component	
	• Measure resistance between: Cylinder 3 Injector – Wiring harness connector (component side) terminal C95-1 & Cylinder 3 Injector – Wiring harness connector (component side) terminal C95-2	less than 3 Ohm
	Yes: E02	No: E01

Test	Work Order Description	Nominal Value
T07	Check: Short to Ground of Signal Circuit	
	• Disconnect wiring harness connector from: Cylinder 3 Injector • Measure resistance between: ECM – Wiring harness connector (wiring harness side) terminal C66-48 & Ground	greater than 500 kOhm
	Yes: E05	No: E06

Result Table (RM413D)

Result	Cause Of Fault
E01	• Defective component: Cylinder 3 Injector **NOTE:** **If an injector has been replaced, the fuel injector calibration code of the new injector must be programmed to the ECM referring to "ECM registration" in Section 6E3.**
E02	• Defective component: ECM **NOTE:** **If ECM is replaced, register vehicle specification into ECM by performing procedure described in "ECM registration" in Section 6E3.**
E03	• Circuit interruption between: ECM – Wiring harness connector (wiring harness side) terminal C66-48 & Cylinder 3 Injector – Wiring harness connector (wiring harness side) terminal C95-1
E04	• Circuit interruption between: ECM – Wiring harness connector (wiring harness side) terminal C66-31 & Cylinder 3 Injector – Wiring harness connector (wiring harness side) terminal C95-2
E05	• Short circuit to ground between: Cylinder 3 Injector – Wiring harness connector (wiring harness side) terminal C95-2 & ECM – Wiring harness connector (wiring harness side) terminal C66-31 or • Defective component: Cylinder 3 Injector **NOTE:** **If an injector has been replaced, the fuel injector calibration code of the new injector must be programmed to the ECM referring to "ECM registration" in Section 6E3.**
E06	• Short circuit to ground between: Cylinder 3 Injector – Wiring harness connector (wiring harness side) terminal C95-1 & ECM – Wiring harness connector (wiring harness side) terminal C66-48
E07	• Short circuit to voltage between: Cylinder 3 Injector – Wiring harness connector (wiring harness side) terminal C95-1 & ECM – Wiring harness connector (wiring harness side) terminal C66-48 or • Short circuit to voltage between: Cylinder 3 Injector – Wiring harness connector (wiring harness side) terminal C95-2 & ECM – Wiring harness connector (wiring harness side) terminal C66-31

Test Table (For RB413D)

Test	Work Order Description	Nominal Value
T01	Check: Diagnostic Trouble Code stored	
	Is the following Diagnostic Trouble Code stored? P0203 – Injector Circuit Malfunction Cylinder-3	
	Yes: E01	No: T02
T02	Check: Short to Voltage of Signal Circuit	
	• Ignition OFF • Disconnect wiring harness connector from: ECM (Wiring Harness Connector D26) • Ignition ON • Measure voltage between: ECM – Wiring harness connector (wiring harness side) terminal D26-48 & Ground	less than 0.3 V
	Yes: T03	No: E07
T03	Check: Short to Ground of Signal Circuit	
	• Ignition OFF • Measure resistance between: ECM – Wiring harness connector (wiring harness side) terminal D26-48 & Ground	greater than 500 kOhm
	Yes: T04	No: T07
T04	Check: Interruption of Signal Circuit	
	• Disconnect wiring harness connector from: Cylinder 3 Injector • Measure resistance between: ECM – Wiring harness connector (wiring harness side) terminal D26-31 & Cylinder 3 Injector – Wiring harness connector (wiring harness side) terminal D40-2	less than 5 Ohm
	Yes: T05	No: E04
T05	Check: Interruption of Signal Circuit	
	• Measure resistance between: ECM – Wiring harness connector (wiring harness side) terminal D26-48 & Cylinder 3 Injector – Wiring harness connector (wiring harness side) terminal D40-1	less than 5 Ohm
	Yes: T06	No: E03
T06	Check: Component	
	• Measure resistance between: Cylinder 3 Injector – Wiring harness connector (component side) terminal D40-1 & Cylinder 3 Injector – Wiring harness connector (component side) terminal D40-2	less than 3 Ohm
	Yes: E02	No: E01

Test	Work Order Description	Nominal Value
T07	Check: Short to Ground of Signal Circuit	
	• Disconnect wiring harness connector from: Cylinder 3 Injector • Measure resistance between: ECM – Wiring harness connector (wiring harness side) terminal D26-48 & Ground	greater than 500 kOhm
	Yes: E05	No: E06

Result Table (For RB413D)

Result	Cause Of Fault
E01	• Defective component: Cylinder 3 Injector **NOTE:** **If an injector has been replaced, the fuel injector calibration code of the new injector must be programmed to the ECM referring to "ECM registration" in Section 6E3.**
E02	• Defective component: ECM **NOTE:** **If ECM is replaced, register vehicle specification into ECM by performing procedure described in "ECM registration" in Section 6E3.**
E03	• Circuit interruption between: ECM – Wiring harness connector (wiring harness side) terminal D26-48 & Cylinder 3 Injector – Wiring harness connector (wiring harness side) terminal D40-1
E04	• Circuit interruption between: ECM – Wiring harness connector (wiring harness side) terminal D26-31 & Cylinder 3 Injector – Wiring harness connector (wiring harness side) terminal D40-2
E05	• Short circuit to ground between: Cylinder 3 Injector – Wiring harness connector (wiring harness side) terminal D40-2 & ECM – Wiring harness connector (wiring harness side) terminal D26-31 or • Defective component: Cylinder 3 Injector **NOTE:** **If an injector has been replaced, the fuel injector calibration code of the new injector must be programmed to the ECM referring to "ECM registration" in Section 6E3.**
E06	• Short circuit to ground between: Cylinder 3 Injector – Wiring harness connector (wiring harness side) terminal D40-1 & ECM – Wiring harness connector (wiring harness side) terminal D26-48
E07	• Short circuit to voltage between: Cylinder 3 Injector – Wiring harness connector (wiring harness side) terminal D40-1 & ECM – Wiring harness connector (wiring harness side) terminal D26-48 or • Short circuit to voltage between: Cylinder 3 Injector – Wiring harness connector (wiring harness side) terminal D40-2 & ECM – Wiring harness connector (wiring harness side) terminal D26-31

C-27, Cylinder 4 Injector Circuit

Test Table (For RM413D)

Test	Work Order Description	Nominal Value
T01	Check: Diagnostic Trouble Code stored	
	Is the following Diagnostic Trouble Code stored? P0204 – Injector Circuit Malfunction Cylinder-4	
	Yes: E01	No: T02
T02	Check: Short to Voltage of Signal Circuit	
	• Ignition OFF • Disconnect wiring harness connector from: ECM (Wiring Harness Connector C66) • Ignition ON • Measure voltage between: ECM – Wiring harness connector (wiring harness side) terminal C66-46 & Ground	less than 0.3 V
	Yes: T03	No: E07
T03	Check: Short to Ground of Signal Circuit	
	• Ignition OFF • Measure resistance between: ECM – Wiring harness connector (wiring harness side) terminal C66-46 & Ground	greater than 500 kOhm
	Yes: T04	No: T07
T04	Check: Interruption of Signal Circuit	
	• Disconnect wiring harness connector from: Cylinder 4 Injector • Measure resistance between: ECM – Wiring harness connector (wiring harness side) terminal C66-1 & Cylinder 4 Injector – Wiring harness connector (wiring harness side) terminal C96-2	less than 5 Ohm
	Yes: T05	No: E04
T05	Check: Interruption of Signal Circuit	
	• Measure resistance between: ECM – Wiring harness connector (wiring harness side) terminal C66-46 & Cylinder 4 Injector – Wiring harness connector (wiring harness side) terminal C96-1	less than 5 Ohm
	Yes: T06	No: E03
T06	Check: Component	
	• Measure resistance between: Cylinder 4 Injector – Wiring harness connector (component side) terminal C96-1 & Cylinder 4 Injector – Wiring harness connector (component side) terminal C96-2	less than 3 Ohm
	Yes: E02	No: E01

Test	Work Order Description	Nominal Value
T07	Check: Short to Ground of Signal Circuit	
	• Disconnect wiring harness connector from: Cylinder 4 Injector • Measure resistance between: ECM – Wiring harness connector (wiring harness side) terminal C66-46 & Ground	greater than 500 kOhm
	Yes: E05	No: E06

Result Table (For RM413D)

Result	Cause Of Fault
E01	• Defective component: Cylinder 4 Injector **NOTE:** **If an injector has been replaced, the fuel injector calibration code of the new injector must be programmed to the ECM referring to "ECM registration" in Section 6E3.**
E02	• Defective component: ECM **NOTE:** **If ECM is replaced, register vehicle specification into ECM by performing procedure described in "ECM registration" in Section 6E3.**
E03	• Circuit interruption between: ECM – Wiring harness connector (wiring harness side) terminal C66-46 & Cylinder 4 Injector – Wiring harness connector (wiring harness side) terminal C96-1
E04	• Circuit interruption between: ECM – Wiring harness connector (wiring harness side) terminal C66-1 & Cylinder 4 Injector – Wiring harness connector (wiring harness side) terminal C96-2
E05	• Short circuit to ground between: Cylinder 4 Injector – Wiring harness connector (wiring harness side) terminal C96-2 & ECM – Wiring harness connector (wiring harness side) terminal C66-1 or • Defective component: Cylinder 4 Injector **NOTE:** **If an injector has been replaced, the fuel injector calibration code of the new injector must be programmed to the ECM referring to "ECM registration" in Section 6E3.**
E06	• Short circuit to ground between: Cylinder 4 Injector – Wiring harness connector (wiring harness side) terminal C96-1 & ECM – Wiring harness connector (wiring harness side) terminal C66-46
E07	• Short circuit to voltage between: Cylinder 4 Injector – Wiring harness connector (wiring harness side) terminal C96-1 & ECM – Wiring harness connector (wiring harness side) terminal C66-46 or • Short circuit to voltage between: Cylinder 4 Injector – Wiring harness connector (wiring harness side) terminal C96-2 & ECM – Wiring harness connector (wiring harness side) terminal C66-1

Test Table (For RB413D)

Test	Work Order Description	Nominal Value
T01	Check: Diagnostic Trouble Code stored	
	Is the following Diagnostic Trouble Code stored? P0204 – Injector Circuit Malfunction Cylinder-4	
	Yes: E01	No: T02
T02	Check: Short to Voltage of Signal Circuit	
	• Ignition OFF • Disconnect wiring harness connector from: ECM (Wiring Harness Connector D26) • Ignition ON • Measure voltage between: ECM – Wiring harness connector (wiring harness side) terminal D26-46 & Ground	less than 0.3 V
	Yes: T03	No: E07
T03	Check: Short to Ground of Signal Circuit	
	• Ignition OFF • Measure resistance between: ECM – Wiring harness connector (wiring harness side) terminal D26-46 & Ground	greater than 500 kOhm
	Yes: T04	No: T07
T04	Check: Interruption of Signal Circuit	
	• Disconnect wiring harness connector from: Cylinder 4 Injector • Measure resistance between: ECM – Wiring harness connector (wiring harness side) terminal D26-1 & Cylinder 4 Injector – Wiring harness connector (wiring harness side) terminal D41-2	less than 5 Ohm
	Yes: T05	No: E04
T05	Check: Interruption of Signal Circuit	
	• Measure resistance between: ECM – Wiring harness connector (wiring harness side) terminal D26-46 & Cylinder 4 Injector – Wiring harness connector (wiring harness side) terminal D41-1	less than 5 Ohm
	Yes: T06	No: E03
T06	Check: Component	
	• Measure resistance between: Cylinder 4 Injector – Wiring harness connector (component side) terminal D41-1 & Cylinder 4 Injector – Wiring harness connector (component side) terminal D41-2	less than 3 Ohm
	Yes: E02	No: E01

Test	Work Order Description	Nominal Value
T07	Check: Short to Ground of Signal Circuit	
	• Disconnect wiring harness connector from: Cylinder 4 Injector • Measure resistance between: ECM – Wiring harness connector (wiring harness side) terminal D26-46 & Ground	greater than 500 kOhm
	Yes: E05	No: E06

Result Table (For RB413D)

Result	Cause Of Fault
E01	• Defective component: Cylinder 4 Injector **NOTE:** **If an injector has been replaced, the fuel injector calibration code of the new injector must be programmed to the ECM referring to "ECM registration" in Section 6E3.**
E02	• Defective component: ECM **NOTE:** **If ECM is replaced, register vehicle specification into ECM by performing procedure described in "ECM registration" in Section 6E3.**
E03	• Circuit interruption between: ECM – Wiring harness connector (wiring harness side) terminal D26-46 & Cylinder 4 Injector – Wiring harness connector (wiring harness side) terminal D41-1
E04	• Circuit interruption between: ECM – Wiring harness connector (wiring harness side) terminal D26-1 & Cylinder 4 Injector – Wiring harness connector (wiring harness side) terminal D41-2
E05	• Short circuit to ground between: Cylinder 4 Injector – Wiring harness connector (wiring harness side) terminal D41-2 & ECM – Wiring harness connector (wiring harness side) terminal D26-1 or • Defective component: Cylinder 4 Injector **NOTE:** **If an injector has been replaced, the fuel injector calibration code of the new injector must be programmed to the ECM referring to "ECM registration" in Section 6E3.**
E06	• Short circuit to ground between: Cylinder 4 Injector – Wiring harness connector (wiring harness side) terminal D41-1 & ECM – Wiring harness connector (wiring harness side) terminal D26-46
E07	• Short circuit to voltage between: Cylinder 4 Injector – Wiring harness connector (wiring harness side) terminal D41-1 & ECM – Wiring harness connector (wiring harness side) terminal D26-46 or • Short circuit to voltage between: Cylinder 4 Injector – Wiring harness connector (wiring harness side) terminal D41-2 & ECM – Wiring harness connector (wiring harness side) terminal D26-1

C-28, Exhaust Gas Recirculation Valve Circuit

Test Table (For RM413D)

Test	Work Order Description	Nominal Value
T01	Check: Interruption of Voltage Supply Circuit	
	• Ignition OFF • Disconnect wiring harness connector from: Exhaust Gas Recirculation Valve and ECM (Wiring Harness Connector C66) • Ignition ON • Measure voltage between the following terminals: Exhaust Gas Recirculation Valve – Wiring harness connector (wiring harness side) terminal C70-1 & Ground	greater than 11 V
	Yes: T02	No: T05
T02	Check: Short to Voltage/Ground/Interruption of Signal Circuit	
	• Measure voltage between: Exhaust Gas Recirculation Valve – Wiring harness connector (wiring harness side) terminal C70-5 & Ground	less than 0.3 V
	Yes: T03	No: E04
T03	Check: Short to Ground of Signal Circuit	
	• Ignition OFF • Measure resistance between: Exhaust Gas Recirculation Valve – Wiring harness connector (wiring harness side) terminal C70-5 & Ground	greater than 500 kOhm
	Yes: T04	No: E03
T04	Check: Interruption of Signal Circuit	
	• Measure resistance between: Exhaust Gas Recirculation Valve – Wiring harness connector (wiring harness side) terminal C70-5 & ECM – Wiring harness connector (wiring harness side) terminal C66-15	less than 5 Ohm
	Yes: E01	No: E02
T05	Check: Interruption of Voltage Supply Circuit	
	• Remove electrical component from socket: Circuit Fuse • Check the following component for proper operation: Circuit Fuse	Test okay?
	Yes: T06	No: T07

Test	Work Order Description	Nominal Value
T06	Check: Interruption of Voltage Supply Circuit	
	• Measure voltage between the following terminals: Circuit Fuse – Input contact & Ground	greater than 11 V
	Yes: E05	No: E06
T07	Check: Interruption of Voltage Supply Circuit	
	• Insert new fuse circuit and then check the fuse for proper operation.	Test okay?
	Yes: E07	No: E08

Result Table (For RM413D)

Result	Cause Of Fault
E01	• Defective component: Exhaust Gas Recirculation Valve or ECM **NOTE:** • **The replacement of the components must be done in the listed order. The system must be checked for proper operation after every replacement.** • **If ECM is replaced, register vehicle specification into ECM by performing procedure described in "ECM registration" in Section 6E3.**
E02	• Circuit interruption between: ECM – Wiring harness connector (wiring harness side) terminal C66-15 & Exhaust Gas Recirculation Valve – Wiring harness connector (wiring harness side) terminal C70-5
E03	• Short circuit to ground between: ECM – Wiring harness connector (wiring harness side) terminal C66-15 & Exhaust Gas Recirculation Valve – Wiring harness connector (wiring harness side) terminal C70-5
E04	• Short circuit to voltage between: ECM – Wiring harness connector (wiring harness side) terminal C66-15 & Exhaust Gas Recirculation Valve – Wiring harness connector (wiring harness side) terminal C70-5
E05	• Circuit interruption between: Circuit Fuse – Output contact & Exhaust Gas Recirculation Valve – Wiring harness connector (wiring harness side) terminal C70-1
E06	• Circuit interruption between: Main Relay – Socket Terminal E58-4 & Circuit Fuse – Input contact
E07	• Defective component: Exhaust Gas Recirculation Valve

Result	Cause Of Fault
E08	• Short circuit to ground between: Circuit Fuse – Output contact & Exhaust Gas Recirculation Valve – Wiring harness connector (wiring harness side) terminal C70-1 & ECM – Wiring harness connector (wiring harness side) terminal C66-5 or • Defective component: ECM **NOTE:** **If ECM is replaced, register vehicle specification into ECM by performing procedure described in "ECM registration" in Section 6E3.**

Test Table (For RB413D)

Test	Work Order Description	Nominal Value
T01	Check: Interruption of Voltage Supply Circuit	
	• Ignition OFF • Disconnect wiring harness connector from: Exhaust Gas Recirculation Valve and ECM (Wiring Harness Connector D26) • Ignition ON • Measure voltage between the following terminals: Exhaust Gas Recirculation Valve – Wiring harness connector (wiring harness side) terminal D31-6 & Ground	greater than 11 V
	Yes: T02	No: T05
T02	Check: Short to Voltage/Ground/Interruption of Signal Circuit	
	• Measure voltage between: Exhaust Gas Recirculation Valve – Wiring harness connector (wiring harness side) terminal D31-4 & Ground	less than 0.3 V
	Yes: T03	No: E04
T03	Check: Short to Ground of Signal Circuit	
	• Ignition OFF • Measure resistance between: Exhaust Gas Recirculation Valve – Wiring harness connector (wiring harness side) terminal D31-4 & Ground	greater than 500 kOhm
	Yes: T04	No: E03
T04	Check: Interruption of Signal Circuit	
	• Measure resistance between: Exhaust Gas Recirculation Valve – Wiring harness connector (wiring harness side) terminal D31-4 & ECM – Wiring harness connector (wiring harness side) terminal D26-15	less than 5 Ohm
	Yes: E01	No: E02
T05	Check: Interruption of Voltage Supply Circuit	
	• Remove electrical component from socket: Circuit Fuse • Check the following component for proper operation: Circuit Fuse	Test okay?
	Yes: T06	No: T07
T06	Check: Interruption of Voltage Supply Circuit	
	• Measure voltage between the following terminals: Circuit Fuse – Input contact & Ground	greater than 11 V
	Yes: E05	No: E06

Test	Work Order Description	Nominal Value
T07	Check: Interruption of Voltage Supply Circuit	
	• Insert new fuse circuit and then check the fuse for proper operation.	Test okay?
	Yes: E07	No: E08

Result Table (For RB413D)

Result	Cause Of Fault
E01	• Defective component: Exhaust Gas Recirculation Valve or ECM **NOTE:** • **The replacement of the components must be done in the listed order. The system must be checked for proper operation after every replacement.** • **If ECM is replaced, register vehicle specification into ECM by performing procedure described in "ECM registration" in Section 6E3.**
E02	• Circuit interruption between: ECM – Wiring harness connector (wiring harness side) terminal D26-15 & Exhaust Gas Recirculation Valve – Wiring harness connector (wiring harness side) terminal D31-4
E03	• Short circuit to ground between: ECM – Wiring harness connector (wiring harness side) terminal D26-15 & Exhaust Gas Recirculation Valve – Wiring harness connector (wiring harness side) terminal D31-4
E04	• Short circuit to voltage between: ECM – Wiring harness connector (wiring harness side) terminal D26-15 & Exhaust Gas Recirculation Valve – Wiring harness connector (wiring harness side) terminal D31-4
E05	• Circuit interruption between: Circuit Fuse – Output contact & Exhaust Gas Recirculation Valve – Wiring harness connector (wiring harness side) terminal D31-6
E06	• Circuit interruption between: Main Relay – Socket Terminal E75-4 & Circuit Fuse – Input contact
E07	• Defective component: Exhaust Gas Recirculation Valve

Result	Cause Of Fault
E08	• Short circuit to ground between: Circuit Fuse – Output contact & Exhaust Gas Recirculation Valve – Wiring harness connector (wiring harness side) terminal D31-6 & ECM – Wiring harness connector (wiring harness side) terminal D26-5 or • Defective component: ECM **NOTE:** **If ECM is replaced, register vehicle specification into ECM by performing procedure described in "ECM registration" in Section 6E3.**

C-29, Air Conditioning System Refrigerant Pressure Sensor

Test Table (For RM413D)

Test	Work Order Description	Nominal Value
T01	Check: Short to Voltage of Voltage Supply Circuit	4.8 ... 5.2 V
	• Ignition OFF • Disconnect wiring harness connector from: A/C Pressure Sensor • Ignition ON • Measure voltage between the following terminals: A/C Pressure Sensor – Wiring harness connector (wiring harness side) terminal E26-1 & Ground	
	Yes: T02	No: T06
T02	Check: Short to Voltage of Signal Circuit	4.8 ... 5.2 V
	• Measure voltage between: A/C Pressure Sensor – Wiring harness connector (wiring harness side) terminal E26-1 & A/C Pressure Sensor – Wiring harness connector (wiring harness side) terminal E26-2	
	Yes: T03	No: T05
T03	Check: Short to Voltage of Signal Circuit	less than 0.3 V
	• Measure voltage between: A/C Pressure Sensor – Wiring harness connector (wiring harness side) terminal E26-3 & Ground	
	Yes: T04	No: E03
T04	Check: Short to Ground/Interruption of Signal Circuit	greater than 500 kOhm
	• Ignition OFF • Disconnect wiring harness connector from: ECM (Wiring Harness Connector E27) • Measure resistance between: A/C Pressure Sensor – Wiring harness connector (wiring harness side) terminal E26-3 & Ground	
	Yes: E01	No: E02
T05	Check: Short to Voltage of Signal Circuit	less than 4.8 V
	• Measure voltage between: A/C Pressure Sensor – Wiring harness connector (wiring harness side) terminal E26-1 & A/C Pressure Sensor – Wiring harness connector (wiring harness side) terminal E26-2	
	Yes: E04	No: E05

Test	Work Order Description	Nominal Value
T06	Check: Short to Voltage of Voltage Supply Circuit	
	• Ignition OFF • Disconnect wiring harness connector from: A/C Pressure Sensor • Ignition ON • Measure voltage between the following terminals: A/C Pressure Sensor – Wiring harness connector (wiring harness side) terminal E26-1 & Ground	greater than 5.2 V
	Yes: E06	No: E07

Result Table (For RM413D)

Result	Cause Of Fault
E01	• Circuit interruption between: ECM – Wiring harness connector (wiring harness side) terminal E27-87 & A/C Pressure Sensor – Wiring harness connector (wiring harness side) terminal E26-3 or • Defective component: A/C Pressure Sensor
E02	• Short circuit to ground between: ECM – Wiring harness connector (wiring harness side) terminal E27-87 & A/C Pressure Sensor – Wiring harness connector (wiring harness side) terminal E26-3
E03	• Short circuit to voltage between: ECM – Wiring harness connector (wiring harness side) terminal E27-87 & A/C Pressure Sensor – Wiring harness connector (wiring harness side) terminal E26-3 or • Defective component: ECM **NOTE:** **If ECM is replaced, register vehicle specification into ECM by performing procedure described in "ECM registration" in Section 6E3.**
E04	• Circuit interruption between: ECM – Wiring harness connector (wiring harness side) terminal E27-10 & A/C Pressure Sensor – Wiring harness connector (wiring harness side) terminal E26-2 or • Defective component: ECM **NOTE:** **If ECM is replaced, register vehicle specification into ECM by performing procedure described in "ECM registration" in Section 6E3.**
E05	• Short circuit to voltage between: ECM – Wiring harness connector (wiring harness side) terminal E27-10 & A/C Pressure Sensor – Wiring harness connector (wiring harness side) terminal E26-2 or • Defective component: ECM **NOTE:** **If ECM is replaced, register vehicle specification into ECM by performing procedure described in "ECM registration" in Section 6E3.**

Result	Cause Of Fault
E06	• Short circuit to voltage between: ECM – Wiring harness connector (wiring harness side) terminal E27-37 & A/C Pressure Sensor – Wiring harness connector (wiring harness side) terminal E26-1 or • Defective component: ECM **NOTE:** **If ECM is replaced, register vehicle specification into ECM by performing procedure described in "ECM registration" in Section 6E3.**
E07	• Short circuit to ground/interruption of circuit between: ECM – Wiring harness connector (wiring harness side) terminal E27-37 & A/C Pressure Sensor – Wiring harness connector (wiring harness side) terminal E26-1 or • Defective component: ECM **NOTE:** **If ECM is replaced, register vehicle specification into ECM by performing procedure described in "ECM registration" in Section 6E3.**

Test Table (For RB413D)

Test	Work Order Description	Nominal Value
T01	Check: Short to Voltage of Voltage Supply Circuit	4.8 ... 5.2 V
	• Ignition OFF • Disconnect wiring harness connector from: A/C Pressure Sensor • Ignition ON • Measure voltage between the following terminals: A/C Pressure Sensor – Wiring harness connector (wiring harness side) terminal E66-1 & Ground	
	Yes: T02	No: T06
T02	Check: Short to Voltage of Signal Circuit	4.8 ... 5.2 V
	• Measure voltage between: A/C Pressure Sensor – Wiring harness connector (wiring harness side) terminal E66-1 & A/C Pressure Sensor – Wiring harness connector (wiring harness side) terminal E66-2	
	Yes: T03	No: T05
T03	Check: Short to Voltage of Signal Circuit	less than 0.3 V
	• Measure voltage between: A/C Pressure Sensor – Wiring harness connector (wiring harness side) terminal E66-3 & Ground	
	Yes: T04	No: E03
T04	Check: Short to Ground/Interruption of Signal Circuit	greater than 500 kOhm
	• Ignition OFF • Disconnect wiring harness connector from: ECM (Wiring Harness Connector G88) • Measure resistance between: A/C Pressure Sensor – Wiring harness connector (wiring harness side) terminal E66-3 & Ground	
	Yes: E01	No: E02
T05	Check: Short to Voltage of Signal Circuit	less than 4.8 V
	• Measure voltage between: A/C Pressure Sensor – Wiring harness connector (wiring harness side) terminal E66-1 & A/C Pressure Sensor – Wiring harness connector (wiring harness side) terminal E66-2	
	Yes: E04	No: E05

Test	Work Order Description	Nominal Value
T06	Check: Short to Voltage of Voltage Supply Circuit	
	• Ignition OFF • Disconnect wiring harness connector from: A/C Pressure Sensor • Ignition ON • Measure voltage between the following terminals: A/C Pressure Sensor – Wiring harness connector (wiring harness side) terminal E66-1 & Ground	greater than 5.2 V
	Yes: E06	No: E07

Result Table (For RM413D)

Result	Cause Of Fault
E01	• Circuit interruption between: ECM – Wiring harness connector (wiring harness side) terminal G88-87 & A/C Pressure Sensor – Wiring harness connector (wiring harness side) terminal E66-3 or • Defective component: A/C Pressure Sensor
E02	• Short circuit to ground between: ECM – Wiring harness connector (wiring harness side) terminal G88-87 & A/C Pressure Sensor – Wiring harness connector (wiring harness side) terminal E66-3
E03	• Short circuit to voltage between: ECM – Wiring harness connector (wiring harness side) terminal G88-87 & A/C Pressure Sensor – Wiring harness connector (wiring harness side) terminal E66-3 or • Defective component: ECM **NOTE:** **If ECM is replaced, register vehicle specification into ECM by performing procedure described in "ECM registration" in Section 6E3.**
E04	• Circuit interruption between: ECM – Wiring harness connector (wiring harness side) terminal G88-10 & A/C Pressure Sensor – Wiring harness connector (wiring harness side) terminal E66-2 or • Defective component: ECM **NOTE:** **If ECM is replaced, register vehicle specification into ECM by performing procedure described in "ECM registration" in Section 6E3.**
E05	• Short circuit to voltage between: ECM – Wiring harness connector (wiring harness side) terminal G88-10 & A/C Pressure Sensor – Wiring harness connector (wiring harness side) terminal E66-2 or • Defective component: ECM **NOTE:** **If ECM is replaced, register vehicle specification into ECM by performing procedure described in "ECM registration" in Section 6E3.**

Result	Cause Of Fault
E06	• Short circuit to voltage between: ECM – Wiring harness connector (wiring harness side) terminal G88-37 & A/C Pressure Sensor – Wiring harness connector (wiring harness side) terminal E66-1 or • Defective component: ECM **NOTE:** **If ECM is replaced, register vehicle specification into ECM by performing procedure described in "ECM registration" in Section 6E3.**
E07	• Short circuit to ground/interruption of circuit between: ECM – Wiring harness connector (wiring harness side) terminal G88-37 & A/C Pressure Sensor – Wiring harness connector (wiring harness side) terminal E66-1 or • Defective component: ECM **NOTE:** **If ECM is replaced, register vehicle specification into ECM by performing procedure described in "ECM registration" in Section 6E3.**

C-30, Air Conditioning System Switch Circuit

Test Table (For RM413D)

Test	Work Order Description	Nominal Value
T01	Check: Interruption of Voltage Supply Circuit	greater than 11 V
	• Ignition OFF • Disconnect wiring harness from: A/C Switch • Ignition ON • Measure voltage between the following terminals: A/C Switch – Wiring harness connector (wiring harness side) terminal G31-7 & Ground	
	Yes: T02	No: E01
T02	Check: Interruption of Voltage Supply Circuit	greater than 11 V
	• Ignition OFF • Disconnect wiring harness from: A/C Relay • Ignition ON • Measure voltage between the following terminals: A/C Relay – Socket terminal G40-3 & Ground	
	Yes: T03	No: E02
T03	Check: Interruption of Voltage Supply Circuit	greater than 11 V
	• Measure voltage between the following terminals: A/C Relay – Socket terminal G40-4 & Ground	
	Yes: T04	No: E03
T04	Check: Interruption of Voltage Supply Circuit	greater than 11 V
	• Measure voltage between the following terminals: A/C Switch – Wiring harness connector (wiring harness side) terminal G31-6 & Ground	
	Yes: T05	No: E04

Test	Work Order Description	Nominal Value
T05	Check: Interruption of Signal Circuit	
	• Ignition OFF • Disconnect wiring harness from: ECM • Connect fused jumper wire to: A/C Relay – Socket terminal G40-1 & Ground • Ignition ON • Measure voltage between the following terminals: ECM – Wiring harness connector (wiring harness side) terminal E27-28 & Ground	greater than 11 V
	Yes: T06	No: E05
T06	Check: Short to Voltage of Signal Circuit	
	• Ignition OFF • Remove fused jumper wire • Connect wiring harness connector to: ECM • Scan Tool Data List Parameter A/C Switch	OFF
	Yes: T07	No: E06
T07	Check: Interruption of Signal Circuit	
	• Connect fused jumper wire to: A/C Relay – Wiring harness connector (wiring harness side) terminal G40-4 & A/C Relay – Wiring harness connector (wiring harness side) terminal G40-5 • Scan Tool Data List Parameter A/C Switch	ON
	Yes: T08	No: E06
T08	Check: Short to Ground of Signal Circuit	
	• Ignition OFF • Remove fused jumper wire • Disconnect wiring harness connector from: Heater Blower Fan Switch • Measure resistance between the following terminals: Heater Blower Fan Switch – Wiring harness connector (wiring harness side) terminal G32-5 & Ground	greater than 500 kOhm
	Yes: T09	No: E07

Test	Work Order Description	Nominal Value
T09	Check: Interruption of Signal Circuit	
	• Install electrical component to socket: A/C Relay • Connect wiring harness connector to: A/C Switch • Ignition ON • A/C Switch ON • Measure resistance between the following terminals: Heater Blower Fan Switch – Wiring harness connector (wiring harness side) terminal G32-5 & Ground	greater than 11 V
	Yes: T10	No: E08
T10	Check: Circuit Interruption of Ground Circuit	
	• Measure resistance between the following terminals: Heater Blower Fan Switch – Wiring harness connector (wiring harness side) terminal G32-1 & Ground	less than 5 Ohm
	Yes: E09	No: E10

Result Table (For RM413D)

Result	Cause Of Fault
E01	• Circuit interruption between: Circuit Fuse – Output contact & A/C switch – Wiring harness connector (wiring harness side) terminal G31-7
E02	• Circuit interruption between: Circuit Fuse – Output contact & A/C Relay – Wiring harness connector (wiring harness side) terminal G40-3
E03	• Circuit interruption between Circuit Fuse – Output contact & A/C Relay – Wiring harness connector (wiring harness side) terminal G40-4
E04	• Circuit interruption between: A/C Relay – Wiring harness connector (wiring harness side) terminal G40-1 & A/C Switch – Wiring harness connector (wiring harness side) terminal G31-6 or • Defective component: A/C Relay
E05	• Circuit interruption between: A/C Relay – Wiring harness connector (wiring harness side) terminal G40-5 & ECM – Wiring harness connector (wiring harness side) terminal E27-28 or • Defective component: A/C Relay
E06	• Defective component: ECM **NOTE:** **If ECM is replaced, register vehicle specification into ECM by performing procedure described in "ECM registration" in Section 6E3.**
E07	• Circuit interruption between: A/C Switch – Wiring harness connector (wiring harness side) terminal G31-8 & Heater Blower Fan Switch – Wiring harness connector (wiring harness side) terminal G32-5
E08	• Short circuit to ground between: A/C Switch – Wiring harness connector (wiring harness side) terminal G31-8 & Heater Blower Fan Switch – Wiring harness connector (wiring harness side) terminal G32-5 • Defective component: A/C Switch
E09	• Defective component: Heater Blower Fan Switch
E10	• Circuit interruption between: Heater blower Fan Switch – Wiring harness connector (wiring harness side) terminal G32-1 & Ground

Test Table (For RB413D)

Test	Work Order Description	Nominal Value
T01	Check: Interruption of Voltage Supply Circuit	
	• Ignition OFF • Disconnect wiring harness connector from: A/C Switch • Ignition ON • Measure voltage between the following terminals: A/C Switch – Wiring harness connector (wiring harness side) terminal G31-1 & Ground	greater than 11 V
	Yes: T02	No: E01
T02	Check: Interruption of Signal Circuit	
	• Ignition OFF • Disconnect wiring harness connector from: ECM and Blower Motor Relay • Measure resistance between the following terminals: A/C Switch – Wiring harness connector (wiring harness side) terminal G31-4 & ECM – Wiring harness connector (wiring harness side) terminal G88-28	less than 5 Ohm
	Yes: T03	No: E02
T03	Check: Shorted to Voltage of Signal Circuit	
	• Ignition ON • Measure voltage between the following terminals: ECM – Wiring harness connector (wiring harness side) terminal G88-28 & Ground	less than 0.3 V
	Yes: T04	No: E03
T04	Check: Shorted to Ground	
	• Ignition OFF • Measure resistance between the following terminals: ECM – Wiring harness connector (wiring harness side) terminal G88-28 & Ground	greater than 500 kOhm
	Yes: T05	No: E04
T05	Check: Component	
	• Connect wiring harness connector to: A/C Switch • A/C Switch ON • Ignition ON • Measure voltage between the following terminals: ECM – Wiring harness connector (wiring harness side) terminal G88-28 & Ground	greater than 11 V
	Yes: T06	No: E05

Test	Work Order Description	Nominal Value
T06	Check: Interruption of Signal Circuit	
	• Measure voltage between the following terminals: Blower Motor Relay – Socket terminal G52-5 & Ground	greater than 11 V
	Yes: T07	No: E06
T07	Check: Interruption of Ground Circuit	
	• Ignition OFF • Measure resistance between the following terminals: Blower Motor Relay – Socket terminal G52-3 & Ground	less than 5 Ohm
	Yes: E07	No: E08

Result Table (For RB413D)

Result	Cause Of Fault
E01	• Circuit interruption between: Circuit Fuse – Output contact & A/C Switch – Wiring harness connector (wiring harness side) terminal G31-7
E02	• Circuit interruption between: A/C Switch – Wiring harness connector (wiring harness side) terminal G31-4 & ECM – Wiring harness connector (wiring harness side) terminal G88-28
E03	• Shorted circuit to voltage between: A/C Switch – Wiring harness connector (wiring harness side) terminal G31-4 & ECM – Wiring harness connector (wiring harness side) terminal G88-28 or Blower Motor Relay – Socket terminal G52-5 & ECM – Wiring harness connector (wiring harness side) terminal G88-28
E04	• Shorted circuit to ground between: A/C Switch – Wiring harness connector (wiring harness side) terminal G31-4 & ECM – Wiring harness connector (wiring harness side) terminal G88-28 or Blower Motor Relay – Socket terminal G52-5 & ECM – Wiring harness connector (wiring harness side) terminal G88-28
E05	• Defective component: A/C Switch
E06	• Circuit interruption between: A/C Switch – Wiring harness connector (wiring harness side) terminal G31-4 & Blower Motor Relay – Socket terminal G52-5
E07	• Defective component: Blower Motor Relay or ECM **NOTE:** • **The replacement of the components must be done in the listed order. The system must be checked for proper operation after every replacement.** • **If ECM is replaced, register vehicle specification into ECM by performing procedure described in "ECM registration" in Section 6E3.**
E08	• Circuit interruption between: Blower Motor Relay – Socket terminal G52-3 & Ground

C-31, Air Conditioning System Relay Circuit

Test Table (For RM413D)

Test	Work Order Description	Nominal Value
T01	Check: Short to Ground/Interruption of Voltage Supply Circuit	
	• Ignition OFF • Remove electrical component from socket: Compressor Relay • Measure voltage between the following terminals: Compressor Relay – Socket terminal C51-3 & Ground	greater than 11 V
	Yes: T02	No: T09
T02	Check: Short to Voltage of Voltage Supply Circuit	
	• Ignition ON • Measure voltage between the following terminals: Compressor Relay – Socket terminal C51-4 & Ground	less than 0.3 V
	Yes: T03	No: E08
T03	Check: Short to Ground/Interruption of Voltage Supply Circuit	
	• Measure voltage between the following terminals: Compressor Relay – Socket terminal C51-2 & Ground	greater than 11 V
	Yes: T04	No: E07
T04	Check: Short to Voltage of Signal Circuit	
	• Ignition OFF • Disconnect wiring harness connector from: ECM (Wiring Harness Connector E27) • Ignition ON • Measure voltage between the following terminals: Compressor Relay – Socket terminal C51-1 & Ground	less than 0.3 V
	Yes: T05	No: E06
T05	Check: Short to Ground/Interruption of Signal Circuit	
	• Ignition OFF • Install electrical component to socket: Compressor Relay • Ignition ON • Measure Voltage between the following terminals: ECM – Wiring harness connector (wiring harness side) terminal E27-79 & Ground	greater than 11 V
	Yes: T06	No: E05

Test	Work Order Description	Nominal Value
T06	Check: Short to Ground/Interruption of Voltage Supply Circuit	
	• Ignition OFF • Disconnect wiring harness connector from: A/C Compressor • Connect fused jumper wire to: ECM – Wiring harness connector (wiring harness side) terminal E27-79 & Ground • Ignition ON • Measure voltage between the following terminals A/C Compressor – Wiring harness connector (wiring harness side) terminal C80-2 & Ground	greater than 11 V
	Yes: T07	No: E04
T07	Check: Circuit Interruption of Ground Circuit	
	• Ignition OFF • Remove fused jumper wire • Measure resistance between the following terminals A/C compressor – Wiring harness connector (wiring harness side) terminal C80-1 & Ground	less than 5 Ohm
	Yes: T08	No: E03
T08	Check: Component	
	• Connect wiring harness connector to: A/C Compressor • Connect fused jumper wire to: Compressor Relay – Socket terminal C51-4 & Battery voltage • Clicking noise from following component: A/C Compressor	Test okay?
	Yes: E01	No: T02
T09	Check: Short to Ground/Interruption of Voltage Supply Circuit	
	• Remove electrical component from socket: Circuit Main Fuse • Check the following component for proper operation: Circuit Main Fuse	Test okay?
	Yes: T10	No: T11
T10	Check: Interruption of Voltage Supply Circuit	
	• Measure voltage between the following terminals: Circuit Main Fuse – Input contact & Ground	greater than 11 V
	Yes: E09	No: E10

Test	Work Order Description	Nominal Value
T11	Check: Short to Ground of Voltage Supply Circuit	Test okay?
	• Connect fused jumper wire to: Compressor Relay – Socket terminal C51-4 & Battery voltage • Check the following component for proper operation: Fuse of the fused jumper wire	
	Yes: E11	No: E12

Result Table (For RM413D)

Result	Cause Of Fault
E01	• Defective component: ECM **NOTE:** **If ECM is replaced, register vehicle specification into ECM by performing procedure described in "ECM registration" in Section 6E3.**
E02	• Defective component: A/C Compressor
E03	• Circuit interruption between: A/C Compressor – Wiring harness connector (wiring harness side) terminal C80-1 & Ground
E04	• Circuit interruption between: Compressor Relay – Socket terminal C51-4 & A/C Compressor – Wiring harness connector (wiring harness side) terminal C80-2 or • Defective component: Compressor Relay
E05	• Circuit interruption between: Compressor Relay – Socket terminal C51-1 & ECM – Wiring harness connector (wiring harness side) terminal E27-79 or • Defective component: Compressor Relay
E06	• Short circuit to voltage between: ECM – Wiring harness connector (wiring harness side) terminal E27-79 & Compressor Relay – Socket terminal C51-1
E07	• Circuit interruption between: Circuit Fuse – Output contact & Compressor Relay – Socket terminal C51-2
E08	• Short circuit to voltage between: Compressor Relay – Socket terminal C51-4 & A/C compressor – Wiring harness connector (wiring harness side) terminal C80-2 or • Defective component: A/C compressor
E09	• Circuit interruption between: Circuit Main Fuse – Output contact & Compressor Relay – Socket terminal C51-3

Result	Cause Of Fault
E10	• Circuit interruption between: System Main Fuse – Output contact & Circuit Main Fuse – Input contact
E11	• Short circuit to ground between: Circuit Main Fuse – Output contact & Compressor Relay – Socket terminal C51-3 or • Defective component: Compressor Relay
E12	• Short circuit to ground between: Compressor Relay – Socket terminal C51-4 & A/C compressor – Wiring harness connector (wiring harness side) terminal C80-2 or • Defective component: A/C compressor

Test Table (For RB413D)

Test	Work Order Description	Nominal Value
T01	Check: Short to Ground/Interruption of Voltage Supply Circuit	
	• Ignition OFF • Remove electrical component from socket: Compressor Relay • Measure voltage between the following terminals: Compressor Relay – Socket terminal E55-4 & Ground	greater than 11 V
	Yes: T02	No: T09
T02	Check: Short to Voltage of Voltage Supply Circuit	
	• Ignition ON • Measure voltage between the following terminals: Compressor Relay – Socket terminal E55-3 & Ground	less than 0.3 V
	Yes: T03	No: E08
T03	Check: Short to Ground/Interruption of Voltage Supply Circuit	
	• Measure voltage between the following terminals: Compressor Relay – Socket terminal E55-2 & Ground	greater than 11 V
	Yes: T04	No: E07
T04	Check: Short to Voltage of Signal Circuit	
	• Ignition OFF • Disconnect wiring harness connector from: ECM (Wiring Harness Connector G88) • Ignition ON • Measure voltage between the following terminals: Compressor Relay – Socket terminal E55-1 & Ground	less than 0.3 V
	Yes: T05	No: E06
T05	Check: Short to Ground/Interruption of Signal Circuit	
	• Ignition OFF • Install electrical component to socket: Compressor Relay • Ignition ON • Measure Voltage between the following terminals: ECM – Wiring harness connector (wiring harness side) terminal G88-79 & Ground	greater than 11 V
	Yes: T06	No: E05

Test	Work Order Description	Nominal Value
T06	Check: Short to Ground/Interruption of Voltage Supply Circuit	
	• Ignition OFF • Disconnect wiring harness connector from: A/C Compressor • Connect fused jumper wire to: ECM – Wiring harness connector (wiring harness side) terminal G88-79 & Ground • Ignition ON • Measure voltage between the following terminals A/C Compressor – Wiring harness connector (wiring harness side) terminal D32-1 & Ground	greater than 11 V
	Yes: T07	No: E04
T07	Check: Circuit Interruption of Ground Circuit	
	• Ignition OFF • Remove fused jumper wire • Measure resistance between the following terminals A/C compressor – Wiring harness connector (wiring harness side) terminal D32-2 & Ground	less than 5 Ohm
	Yes: T08	No: E03
T08	Check: Component	
	• Connect wiring harness connector to: A/C Compressor • Connect fused jumper wire to: Compressor Relay – Socket terminal E55-3 & Battery voltage • Clicking noise from following component: A/C Compressor	Test okay?
	Yes: E01	No: T02
T09	Check: Short to Ground/Interruption of Voltage Supply Circuit	
	• Remove electrical component from socket: Circuit Fuse • Check the following component for proper operation: Circuit Fuse	Test okay?
	Yes: T10	No: T11
T10	Check: Interruption of Voltage Supply Circuit	
	• Measure voltage between the following terminals: Circuit Fuse – Input contact & Ground	greater than 11 V
	Yes: E09	No: E10

Test	Work Order Description	Nominal Value
T11	Check: Short to Ground of Voltage Supply Circuit	
	• Connect fused jumper wire to: Compressor Relay – Socket terminal E55-3 & Battery voltage • Check the following component for proper operation: Fuse of the fused jumper wire	Test okay?
	Yes: E11	No: E12

Result Table (For RB413D)

Result	Cause Of Fault
E01	• Defective component: ECM **NOTE:** **If ECM is replaced, register vehicle specification into ECM by performing procedure described in "ECM registration" in Section 6E3.**
E02	• Defective component: A/C Compressor
E03	• Circuit interruption between: A/C Compressor – Wiring harness connector (wiring harness side) terminal D32-2 & Ground
E04	• Circuit interruption between: Compressor Relay – Socket terminal E55-3 & A/C Compressor – Wiring harness connector (wiring harness side) terminal D32-1 or • Defective component: Compressor Relay
E05	• Circuit interruption between: Compressor Relay – Socket terminal E55-1 & ECM – Wiring harness connector (wiring harness side) terminal G88-79 or • Defective component: Compressor Relay
E06	• Short circuit to voltage between: ECM – Wiring harness connector (wiring harness side) terminal G88-79 & Compressor Relay – Socket terminal E55-1
E07	• Circuit interruption between: Circuit Fuse – Output contact & Compressor Relay – Socket terminal E55-2
E08	• Short circuit to voltage between: Compressor Relay – Socket terminal E55-3 & COMPRESSOR – Wiring harness connector (wiring harness side) terminal D32-1 or • Defective component: COMPRESSOR
E09	• Circuit interruption between: Circuit Main Fuse – Output contact & Compressor Relay – Socket terminal E55-4

Result	Cause Of Fault
E10	• Circuit interruption between: System Main Fuse – Output contact & Circuit Main Fuse – Input contact
E11	• Short circuit to ground between: Circuit Main Fuse – Output contact & Compressor Relay – Socket terminal E55-4 or • Defective component: Compressor Relay
E12	• Short circuit to ground between: Compressor Relay – Socket terminal E55-3 & COMPRESSOR – Wiring harness connector (wiring harness side) terminal D32-1 or • Defective component: COMPRESSOR

C-32, Fan Circuit

Test Table (For RM413D)

Test	Work Order Description	Nominal Value
T01	Check: Component	
	• Ignition ON • Scan Tool MISC Test – Radiator Fan Test Press NO key	Radiator fan is switched off
	Yes: T02	No: T11
T02	Check: Component	
	• Ignition ON • Scan Tool MISC Test – Radiator Fan Test Press YES key	Is radiator fan running at low speed?
	Yes: T03	No: T18
T03	Check: Interruption of Signal Circuit	
	• Ignition OFF • Remove electrical component from socket: Radiator Fan Relay No.1 • Ignition ON • Measure voltage between the following terminals: Radiator Fan Relay No.1 – Socket terminal C52-1 & Ground	greater than 11 V
	Yes: T04	No: E01
T04	Check: Interruption of Voltage Supply Circuit	
	• Measure voltage between the following terminals: Radiator Fan Relay No.1 – Socket terminal C52-3 & Ground	greater than 11 V
	Yes: T05	No: E02
T05	Check: Interruption of Signal Circuit	
	• Ignition OFF • Remove electrical component from socket: Radiator Fan Relay No.3 • Ignition ON • Measure voltage between the following terminals: Radiator Fan Relay No.3 – Socket terminal E60-4 & Ground	greater than 11 V
	Yes: T06	No: E03

Test	Work Order Description	Nominal Value
T06	Check: Interruption of Signal Circuit	
	• Ignition OFF • Install electrical component to socket: Radiator Fan Relay No.1 • Disconnect wiring harness connector from: ECM • Ignition ON • Measure voltage between the following terminals: ECM – Wiring harness connector (wiring harness side) terminal E27-8 & Ground	greater than 11 V
	Yes: T07	No: E04
T07	Check: Interruption of Voltage Supply Circuit	
	• Ignition OFF • Disconnect wiring harness connector from: Radiator Fan Motor • Connect fused jumper wire to: ECM – Wiring harness connector (wiring harness side) terminal E27-8 & Ground • Measure voltage between the following terminals: Radiator Fan Motor – Wiring harness connector (wiring harness side) terminal E31-4 & Ground	greater than 11 V
	Yes: T08	No: E05
T08	Check: Interruption of Voltage Supply Circuit	
	• Ignition OFF • Connect wiring harness connector to: Radiator Fan Motor • Ignition ON • Measure voltage between the following terminals: Radiator Fan Relay No.3 – Socket terminal E60-2 & Ground	greater than 11 V
	Yes: T09	No: E06
T09	Check: Interruption of Voltage Supply Circuit	
	• Ignition OFF • Remove fused jumper wire • Remove electrical component from socket: Radiator Fan Relay No.1 • Install electrical component to socket: Radiator Fan Relay No.3 • Ignition ON • Measure voltage between the following terminals: ECM – Wiring harness connector (wiring harness side) terminal E27-8 & Ground	greater than 11V
	Yes: T10	No: E07

Test	Work Order Description	Nominal Value
T10	Check: Circuit Interruption of Ground Circuit	
	• Ignition OFF • Remove electrical component from socket: Radiator Fan Relay No.3 • Measure resistance between the following terminals: Radiator Fan Relay No.3 – Socket terminal E60-1 & Ground	less than 5 Ohm
	Yes: E09	No: E08
T11	Check: Short to Ground of Signal Circuit	
	• Ignition OFF • Remove electrical component from socket: Radiator Fan Relay No.2 • Ignition ON	Radiator cooling fan is switched off
	Yes: T12	No: T14
T12	Check: Short to Ground of Signal Circuit	
	• Ignition OFF • Disconnect wiring harness connector from: ECM • Measure resistance between the following terminals: ECM – Wiring harness connector (wiring harness side) terminal E27-7 & Ground	greater than 500 kOhm
	Yes: T13	No: E10
T13	Check: Component	
	• Disconnect wiring harness connector from: Radiator Fan Motor • Install electrical component to socket: Radiator Fan Relay No.2 • Measure voltage between the following terminals: • Radiator Fan Motor – Wiring harness connector (wiring harness side) terminal E31-2 & Ground	less than 0.3 V
	Yes: E09	No: E11
T14	Check: Short to Voltage of Voltage Supply Circuit	
	• Ignition OFF • Disconnect wiring harness connector from: Radiator Fan Motor • Ignition ON • Measure voltage between the following terminals: Radiator Fan Motor – Wiring harness connector (wiring harness side) terminal E31-2 & Ground	less than 0.3 V
	Yes: T15	No: E13

Test	Work Order Description	Nominal Value
T15	Check: Short to Ground of Signal Circuit	
	• Ignition OFF • Install electrical component to socket: Radiator Fan Relay No.2 • Remove electrical component from socket: Radiator Fan Relay No.1 Ignition ON	Radiator cooling fan is switched off
	Yes: T16	No: E09
T16	Check: Short to Ground of Signal Circuit	
	• Ignition OFF • Remove electrical component from socket: Radiator Fan Relay No.3 • Disconnect wiring harness connector from: ECM • Measure resistance between the following terminals: ECM – Wiring harness connector (wiring harness side) terminal E27-8 & Ground	greater than 500 kOhm
	Yes: T17	No: E14
T17	Check: Component	
	• Install electrical component to socket: Radiator Fan Relay No.1 and No.3 • Ignition ON	Radiator cooling fan is switched off
	Yes: E15	No: E12
T18	Check: Short to Ground/Interruption of Signal Circuit	
	• Ignition OFF • Remove electrical component from socket: Radiator Fan Relay No.2 • Ignition ON • Measure voltage between the following terminals: Radiator Fan Relay No.2 – Socket terminal C62-1 & Ground	greater than 11 V
	Yes: T19	No: E16
T19	Check: Short to Ground/Interruption of Signal Circuit	
	• Measure voltage between the following terminals: Radiator Fan Relay No.2 – Socket terminal C62-3 & Ground	greater than 11 V
	Yes: T20	No: E17
T20	Check: Interruption of Signal Circuit	
	• Ignition OFF • Disconnect wiring harness connector from: ECM • Measure resistance between the following terminals: ECM – Wiring harness connector (wiring harness side) terminal E27-7 & Radiator Fan Relay No.2 – Socket terminal C62-2	less than 5 Ohm
	Yes: T21	No: E18

Test	Work Order Description	Nominal Value
T21	Check: Interruption of Signal Circuit	
	• Disconnect wiring harness connector from: Radiator Fan Motor • Connect fused jumper wire to: Radiator Fan Relay No.2 – Socket terminal C62-3 & Radiator Fan Relay No.2 – Socket terminal C62-4 • Ignition ON • Measure voltage between the following terminals: Radiator Fan Motor – Wiring harness connector (wiring harness side) terminal E31-2 & Ground	greater than 11 V
	Yes: T22	No: E19
T22	Check: Circuit Interruption of Ground Circuit	
	• Ignition OFF • Remove fused jumper wire • Measure resistance between the following terminals: Radiator Fan Motor – Wiring harness connector (wiring harness side) terminal E31-1 & Ground	less than 5 Ohm
	Yes: T23	No: E20
T23	Check: Component	
	• Install electrical component to socket: Radiator Fan Relay No.2 • Ignition ON • Measure voltage between the following terminals: ECM – Wiring harness connector (wiring harness side) terminal E27-7 & Ground	greater than 11 V
	Yes: T24	No: E11
T24	Check: Component	
	• Ignition OFF • Connect fused jumper wire to: ECM – Wiring harness connector (wiring harness side) terminal E27-7 & Ground • Measure voltage between the following terminals: Radiator Fan Motor – Wiring harness connector (wiring harness side) terminal E31-2 & Ground	greater than 11 V
	Yes: T25	No: E11

Test	Work Order Description	Nominal Value
T25	Check: Component	
	• Ignition OFF • Connect wiring harness connector to: Radiator Fan Motor • Connect fused jumper wire to: ECM – Wiring harness connector (wiring harness side) terminal E27-7 & Ground • Ignition ON	Is radiator fan running at low speed?
	Yes: E15	No: E12

Result Table (For RM413D)

Result	Cause of Fault
E01	• Circuit interruption between: Radiator Fan Relay No.1 – Socket terminal C52-1 & Circuit fuse – Output contact
E02	• Circuit interruption between Radiator Fan Relay No.1 – Socket terminal C52-3 & Circuit main fuse – Output contact
E03	• Circuit interruption between Radiator Fan Relay No.3 – Socket terminal E60-4 & Circuit fuse – Output contact
E04	• Circuit interruption between Radiator Fan Relay No.1 – Socket terminal C52-2 & ECM – Wiring harness connector (wiring harness side) terminal E27-8 or • Defective component Radiator Fan Relay No.1
E05	• Circuit interruption between Radiator Fan Relay No.1 – Socket terminal C52-4 & Radiator Fan Motor – Wiring harness connector (wiring harness side) terminal E31-4 or • Defective component Radiator Fan Relay No.1
E06	• Circuit interruption between Radiator Fan Relay No.3 – Socket terminal E60-2 & Radiator fan motor – Wiring harness connector (wiring harness side) terminal E31-3 or • Defective component Radiator Fan Motor
E07	• Circuit interruption between Radiator Fan Relay No.3 – Socket terminal E60-3 & ECM – Wiring harness connector (wiring harness side) terminal E27-8 or • Defective component Radiator Fan Relay No.3
E08	• Circuit interruption between Radiator Fan Relay No.3 – Socket terminal E60-1 & Ground

Result	Cause of Fault
E09	• Defective component: Radiator Fan Motor or ECM **NOTE:** • **The replacement of the components must be done in the listed order. The system must be checked for proper operation after every replacement.** • **If ECM is replaced, register vehicle specification into ECM by performing procedure described in "ECM registration" in Section 6E3.**
E10	• Short circuit to ground between Radiator Fan Relay No.2 – Socket terminal C62-2 & ECM – Wiring harness connector (wiring harness side) terminal E27-7
E11	• Defective component: Radiator Fan Relay No.2
E12	• Defective component: Radiator Fan Motor
E13	• Short circuit to voltage between Radiator Fan Relay No.2 – Socket terminal C62-4 & Radiator Fan Motor – Wiring harness connector (wiring harness side) terminal E31-2
E14	• Short circuit to ground between: Radiator Fan Relay No.1 – Socket terminal C52-2 & ECM – Wiring harness connector (wiring harness side) terminal E27-8 & Radiator Fan Relay No.3 – Socket terminal E60-3
E15	• Defective component: ECM **NOTE:** **If ECM is replaced, register vehicle specification into ECM by performing procedure described in "ECM registration" in Section 6E3.**
E16	• Circuit interruption between Circuit Fuse – Output contact & Radiator Fan Relay No.2 – Socket terminal C62-1 or • Short circuit to ground between Circuit Fuse – Output contact & Radiator Fan Relay No.2 – Socket terminal C62-1 & Radiator Fan Relay No.1 – Socket terminal C52-1 & Radiator Fan Relay No.3 – Socket terminal E60-4 or • Defective component: Circuit Fuse

Result	Cause of Fault
E17	• Circuit interruption between Circuit Main Fuse – Output contact & Radiator Fan Relay No.2 – Socket terminal C62-3 or • Short circuit to ground between Circuit Main Fuse – Output contact & Radiator Fan Relay No.2 – Socket terminal C62-3 & Radiator Fan Relay No.1 – Socket terminal C52-3 • Defective component: Circuit Main Fuse
E18	• Circuit interruption between Radiator Fan Relay No.2 – Socket terminal C62-2 & ECM – Wiring harness connector (wiring harness side) terminal E27-7 • Defective component: Radiator Fan Relay No.2
E19	• Circuit interruption between Radiator Fan Relay No.2 – Socket terminal C62-4 & Radiator Fan Motor – Wiring harness connector (wiring harness side) terminal E31-2
E20	• Circuit interruption between Radiator Fan Motor – Wiring harness connector (wiring harness side) terminal E31-1 & Ground

Test Table (For RB413D)

Test	Work Order Description	Nominal Value
T01	Check: Component	Radiator fan is switched off
	• Ignition ON • Scan Tool MISC Test – Radiator Fan Test Press NO key	
	Yes: T02	No: T11
T02	Check: Component	Is radiator fan running at low speed?
	• Ignition ON • Scan Tool MISC Test – Radiator Fan Test Press YES key	
	Yes: T03	No: T18
T03	Check: Interruption of Signal Circuit	greater than 11 V
	• Ignition OFF • Remove electrical component from socket: Radiator Fan Relay No.2 • Measure voltage between the following terminals: Radiator Fan Relay No.2 – Socket terminal E69-2 & Ground	
	Yes: T04	No: E01
T04	Check: Interruption of Voltage Supply Circuit	greater than 11 V
	• Measure voltage between the following terminals: Radiator Fan Relay No.2 – Socket terminal E69-4 & Ground	
	Yes: T05	No: E02
T05	Check: Interruption of Signal Circuit	greater than 11 V
	• Remove electrical component from socket: Radiator Fan Relay No.3 • Measure voltage between the following terminals: Radiator Fan Relay No.3 – Socket terminal E73-4 & Ground	
	Yes: T06	No: E03
T06	Check: Interruption of Signal Circuit	greater than 11 V
	• Install electrical component to socket: Radiator Fan Relay No.2 • Disconnect wiring harness connector from: ECM • Measure voltage between the following terminals: ECM – Wiring harness connector (wiring harness side) terminal G88-8 & Ground	
	Yes: T07	No: E04

Test	Work Order Description	Nominal Value
T07	Check: Interruption of Voltage Supply Circuit	
	• Disconnect wiring harness connector from: Radiator Fan Motor • Connect fused jumper wire to: ECM – Wiring harness connector (wiring harness side) terminal G88-8 & Ground • Measure voltage between the following terminals: Radiator Fan Motor – Wiring harness connector (wiring harness side) terminal E44-4 & Ground	greater than 11 V
	Yes: T08	No: E05
T08	Check: Interruption of Voltage Supply Circuit	
	• Connect wiring harness connector to: Radiator Fan Motor • Measure voltage between the following terminals: Radiator Fan Relay No.3 – Socket terminal E73-2 & Ground	greater than 11 V
	Yes: T09	No: E06
T09	Check: Interruption of Voltage Supply Circuit	
	• Remove fused jumper wire • Remove electrical component from socket: Radiator Fan Relay No.2 • Install electrical component to socket: Radiator Fan Relay No.3 • Measure voltage between the following terminals: ECM – Wiring harness connector (wiring harness side) terminal G88-8 & Ground	greater than 11V
	Yes: T10	No: E07
T10	Check: Circuit Interruption of Ground Circuit	
	• Remove electrical component from socket: Radiator Fan Relay No.3 • Measure resistance between the following terminals: Radiator Fan Relay No.3 – Socket terminal E73-1 & Ground	less than 5 Ohm
	Yes: E09	No: E08
T11	Check: Short to Ground of Signal Circuit	
	• Ignition OFF • Remove electrical component from socket: Radiator Fan Relay No.1 • Ignition ON	Radiator cooling fan is switched off
	Yes: T12	No: T14

Test	Work Order Description	Nominal Value
T12	Check: Short to Ground of Signal Circuit	
	• Ignition OFF • Disconnect wiring harness connector from: ECM • Measure resistance between the following terminals: ECM – Wiring harness connector (wiring harness side) terminal G88-7 & Ground	greater than 500 kOhm
	Yes: T13	No: E10
T13	Check: Component	
	• Disconnect wiring harness connector from: Radiator Fan Motor • Install electrical component to socket: Radiator Fan Relay No.1 • Measure voltage between the following terminals: Radiator Fan Motor – Wiring harness connector (wiring harness side) terminal E44-2 & Ground	less than 0.3 V
	Yes: E09	No: E11
T14	Check: Short to Voltage of Voltage Supply Circuit	
	• Ignition OFF • Disconnect wiring harness connector from: Radiator Fan Motor • Ignition ON • Measure voltage between the following terminals: Radiator Fan Motor – Wiring harness connector (wiring harness side) terminal E44-2 & Ground	less than 0.3 V
	Yes: T15	No: E13
T15	Check: Short to Ground of Signal Circuit	
	• Ignition OFF • Install electrical component to socket: Radiator Fan Relay No.1 • Remove electrical component from socket: Radiator Fan Relay No.2 Ignition ON	Radiator cooling fan is switched off
	Yes: T16	No: E09
T16	Check: Short to Ground of Signal Circuit	
	• Ignition OFF • Remove electrical component from socket: Radiator Fan Relay No.3 • Disconnect wiring harness connector from: ECM • Measure resistance between the following terminals: ECM – Wiring harness connector (wiring harness side) terminal G88-8 & Ground	greater than 500 kOhm
	Yes: T17	No: E14

Test	Work Order Description	Nominal Value
T17	Check: Component	
	• Install electrical component to socket: Radiator Fan Relay No.2 and No.3 • Ignition ON	Radiator cooling fan is switched off
	Yes: E15	No: E12
T18	Check: Short to Ground/Interruption of Signal Circuit	
	• Ignition OFF • Remove electrical component from socket: Radiator Fan Relay No.1 • Measure voltage between the following terminals: Radiator Fan Relay No.1 – Socket terminal E53-2 & Ground	greater than 11 V
	Yes: T19	No: E16
T19	Check: Short to Ground/Interruption of Signal Circuit	
	• Measure voltage between the following terminals: Radiator Fan Relay No.1 – Socket terminal E53-4 & Ground	greater than 11 V
	Yes: T20	No: E17
T20	Check: Interruption of Signal Circuit	
	• Disconnect wiring harness connector from: ECM • Measure resistance between the following terminals: ECM – Wiring harness connector (wiring harness side) terminal G88-7 & Radiator Fan Relay No.1 – Socket terminal E53-1	less than 5 Ohm
	Yes: T21	No: E18
T21	Check: Interruption of Signal Circuit	
	• Disconnect wiring harness connector from: Radiator Fan Motor • Connect fused jumper wire to: Radiator Fan Relay No.1 – Socket terminal E53-4 & Radiator Fan Relay No.1 – Socket terminal E53-3 • Measure voltage between the following terminals: Radiator Fan Motor – Wiring harness connector (wiring harness side) terminal E44-2 & Ground	greater than 11 V
	Yes: T22	No: E19
T22	Check: Circuit Interruption of Ground Circuit	
	• Remove fused jumper wire • Measure resistance between the following terminals: Radiator Fan Motor – Wiring harness connector (wiring harness side) terminal E44-1 & Ground	less than 5 Ohm
	Yes: T23	No: E20

Test	Work Order Description	Nominal Value
T23	Check: Component	
	• Install electrical component to socket: Radiator Fan Relay No.1 • Measure voltage between the following terminals: ECM – Wiring harness connector (wiring harness side) terminal G88-7 & Ground	greater than 11 V
	Yes: T24	No: E11
T24	Check: Component	
	• Connect fused jumper wire to: ECM – Wiring harness connector (wiring harness side) terminal E27-7 & Ground • Measure voltage between the following terminals: Radiator Fan Motor – Wiring harness connector (wiring harness side) terminal E44-2 & Ground	greater than 11 V
	Yes: T25	No: E11
T25	Check: Component	
	• Connect wiring harness connector to: Radiator Fan Motor • Connect fused jumper wire to: ECM – Wiring harness connector (wiring harness side) terminal G88-7 & Ground • Ignition ON	Is radiator fan running at low speed?
	Yes: E15	No: E12

Result Table (For RB413D)

Result	Cause of Fault
E01	• Circuit interruption between: Radiator Fan Relay No.2 – Socket terminal E69-2 & Circuit Main Fuse – Output contact
E02	• Circuit interruption between Radiator Fan Relay No.2 – Socket terminal E69-4 & Circuit Main Fuse – Output contact
E03	• Circuit interruption between Radiator Fan Relay No.3 – Socket terminal E73-4 & Circuit Main Fuse – Output contact
E04	• Circuit interruption between Radiator Fan Relay No.2 – Socket terminal E69-1 & ECM – Wiring harness connector (wiring harness side) terminal G88-8 or • Defective component Radiator Fan Relay No.2
E05	• Circuit interruption between Radiator Fan Relay No.2 – Socket terminal E69-3 & Radiator Fan Motor – Wiring harness connector (wiring harness side) terminal E44-4 or • Defective component Radiator Fan Relay No.2
E06	• Circuit interruption between Radiator Fan Relay No.3 – Socket terminal E73-2 & • Radiator fan motor – Wiring harness connector (wiring harness side) terminal E44-3 or • Defective component Radiator Fan Motor
E07	• Circuit interruption between Radiator Fan Relay No.3 – Socket terminal E73-3 & ECM – Wiring harness connector (wiring harness side) terminal G88-8 or • Defective component Radiator Fan Relay No.3
E08	• Circuit interruption between Radiator Fan Relay No.3 – Socket terminal E73-1 & Ground

Result	Cause of Fault
E09	• Defective component: Radiator Fan Motor or ECM **NOTE:** • **The replacement of the components must be done in the listed order. The system must be checked for proper operation after every replacement.** • **If ECM is replaced, register vehicle specification into ECM by performing procedure described in "ECM registration" in Section 6E3.**
E10	• Short circuit to ground between Radiator Fan Relay No.1 – Socket terminal E53-1 & ECM – Wiring harness connector (wiring harness side) terminal G88-7
E11	• Defective component: Radiator Fan Relay No.1
E12	• Defective component: Radiator Fan Motor
E13	• Short circuit to voltage between Radiator Fan Relay No.1 – Socket terminal E53-3 & Radiator Fan Motor – Wiring harness connector (wiring harness side) terminal E44-2
E14	• Short circuit to ground between: Radiator Fan Relay No.2 – Socket terminal E69-1 & ECM – Wiring harness connector (wiring harness side) terminal G88-8 & Radiator Fan Relay No.3 – Socket terminal E73-3
E15	• Defective component: ECM **NOTE:** **If ECM is replaced, register vehicle specification into ECM by performing procedure described in "ECM registration" in Section 6E3.**
E16	• Circuit interruption between Circuit Main Fuse – Output contact & Radiator Fan Relay No.1 – Socket terminal E53-2 or • Short circuit to ground between Circuit Main Fuse – Output contact & Radiator Fan Relay No.1 – Socket terminal E53-2 & Radiator Fan Relay No.2 – Socket terminal E69-2 & Radiator Fan Relay No.3 – Socket terminal E73-4 or • Defective component: Circuit Main Fuse

Result	Cause of Fault
E17	• Circuit interruption between Circuit Main Fuse – Output contact & Radiator Fan Relay No.1 – Socket terminal E53-4 or • Short circuit to ground between Circuit Main Fuse – Output contact & Radiator Fan Relay No.1 – Socket terminal E53-4 & Radiator Fan Relay No.2 – Socket terminal E69-4 • Defective component: Circuit Main Fuse
E18	• Circuit interruption between Radiator Fan Relay No.1 – Socket terminal E53-1 & ECM – Wiring harness connector (wiring harness side) terminal G88-7 • Defective component: Radiator Fan Relay No.1
E19	• Circuit interruption between Radiator Fan Relay No.1 – Socket terminal E53-3 Radiator Fan Motor – Wiring harness connector (wiring harness side) terminal E44-2
E20	• Circuit interruption between Radiator Fan Motor – Wiring harness connector (wiring harness side) terminal E44-1 & Ground

C-33, Glow Time Relay Circuit

Test Table (For RM413D)

Test	Work Order Description	Nominal Value
T01	Check: Component	Inspection okay?
	• Check the following component for proper operation: Glow Plug	
	Yes: T02	No: E13
T02	Check: Short to Ground/Interruption of Voltage Supply Circuit	greater than 11 V
	• Ignition OFF • Disconnect wiring harness connector from: Glow Controller • Measure voltage between the following terminals: Glow Controller – Wiring harness connector (wiring harness side) terminal E29-7 & Ground	
	Yes: T03	No: T11
T03	Check: Circuit Interruption of Ground Circuit	greater than 11 V
	• Measure voltage between the following terminals: Glow Controller – Wiring harness connector (wiring harness side) terminal E29-7 & Glow Controller – Wiring harness connector (wiring harness side) terminal E29-6	
	Yes: T04	No: E09
T04	Check: Interruption of Voltage Supply Circuit	greater than 11 V
	• Ignition ON • Measure voltage between the following terminals: Glow Controller – Wiring harness connector (wiring harness side) terminal E29-1 & Ground	
	Yes: T05	No: E08
T05	Check: Short to Voltage of Signal Circuit	ON
	• Data List Parameter Glow Relay	
	Yes: T06	No: E07
T06	Check: Short to Ground/Interruption of Signal Circuit	OFF
	• Ignition OFF • Connect fused jumper wire to: Glow Controller – Wiring harness connector (wiring harness side) terminal E29-3 & Ground • Ignition ON • Data List Parameter Glow Relay	
	Yes: T07	No: E06

Test	Work Order Description	Nominal Value
T07	Check: Interruption of Signal Circuit	
	• Remove fused jumper wire • Scan Tool MISC test: Glow plug control • Press YES key Measure voltage between the following terminals: Glow Controller – Wiring harness connector (wiring harness side) terminal E29-8 & Battery voltage	greater than 11 V
	Yes: T08	No: E05
T08	Check: Short to Voltage of Signal Circuit	
	• Ignition OFF • Disconnect wiring harness connector from: ECM • Measure resistance between the following terminals: Glow Controller – Wiring harness connector (wiring harness side) terminal E29-8 & Ground	greater than 500 kOhm
	Yes: T09	No: E04
T09	Check: Short to Voltage of Signal Circuit	
	• Disconnect wiring harness connector from: Glow Plugs • Ignition ON • Measure voltage between: Glow Plugs – Wiring harness connector (wiring harness side) terminal C97-1, C98-1, C99-1, C100-1 & Ground	less than 0.3 V
	Yes: T10	No: E03
T10	Check: Short to Ground/Interruption of Signal Circuit	
	• Ignition OFF • Measure resistance between the following terminals: Glow Controller – Wiring harness connector (wiring harness side) terminal E29-4, E29-5 & Ground	greater than 500 kOhm
	Yes: E01	No: E02
T11	Check: Component	
	• Remove electrical component from socket: Circuit Main Fuse • Check the following component for proper operation: Circuit Main Fuse	Test okay?
	Yes: T12	No: E12

Test	Work Order Description	Nominal Value
T12	Check: Interruption of Voltage Supply Circuit	
	• Measure voltage between the following terminals: Circuit Main Fuse – Input contact & Ground	greater than 11 V
	Yes: E10	No: E11

Result Table (For RM413D)

Result	Cause Of Fault
E01	• Circuit interruption between: Glow Controller – Wiring harness connector (wiring harness side) terminal E29-4, E29-5 & Glow Plugs – Wiring harness connector (wiring harness side) terminal C97-1, C98-1, C99-1, C100-1 or • Defective component: Glow Controller
E02	• Short circuit to ground between: Glow Controller – Wiring harness connector (wiring harness side) terminal E29-4, E29-5 & Glow Plugs – Wiring harness connector (wiring harness side) terminal C97-1, C98-1, C99-1, C100-1
E03	• Short circuit to voltage between: Glow Controller – Wiring harness connector (wiring harness side) terminal E29-4, E29-5 & Glow Plugs – Wiring harness connector (wiring harness side) terminal C97-1, C98-1, C99-1, C100-1 or • Defective component: Glow Controller
E04	• Short circuit to ground between: ECM – Wiring harness connector (wiring harness side) terminal E27-74 & Glow Controller – Wiring harness connector (wiring harness side) terminal E29-8
E05	• Short circuit to voltage/interruption of circuit between: ECM – Wiring harness connector (wiring harness side) terminal E27-74 & Glow Controller – Wiring harness connector (wiring harness side) terminal E29-8 or • Defective component: ECM **NOTE:** **If ECM is replaced, register vehicle specification into ECM by performing procedure described in "ECM registration" in Section 6E3.**
E06	• Short circuit to voltage/interruption of circuit between: ECM – Wiring harness connector (wiring harness side) terminal E27-70 & Glow Controller – Wiring harness connector (wiring harness side) terminal E29-3 or • Defective component: ECM **NOTE:** **If ECM is replaced, register vehicle specification into ECM by performing procedure described in "ECM registration" in Section 6E3.**

Result	Cause Of Fault
E07	• Short circuit to ground between: ECM – Wiring harness connector (wiring harness side) terminal E27-70 & Glow Controller – Wiring harness connector (wiring harness side) terminal E29-3 or • Defective component: ECM **NOTE:** **If ECM is replaced, register vehicle specification into ECM by performing procedure described in "ECM registration" in Section 6E3.**
E08	• Circuit interruption between: Circuit Fuse – Output contact & Glow Controller – Wiring harness connector (wiring harness side) terminal E29-1
E09	• Circuit interruption between: Glow Controller – Wiring harness connector (wiring harness side) terminal E29-6 & Ground
E10	• Circuit interruption between: Circuit Main Fuse – Output contact & Glow Controller – Wiring harness connector (wiring harness side) terminal E29-7
E11	• Circuit interruption between: Battery positive (+) terminal & Circuit Main Fuse – Input contact
E12	• Short circuit to ground between: Circuit Main Fuse – Output contact & Glow Controller – Wiring harness connector (wiring harness side) terminal E29-7
E13	• Defective component: Glow Plugs

Test Table (For RB413D)

Test	Work Order Description	Nominal Value
T01	Check: Component	Inspection okay?
	• Check the following component for proper operation: Glow Plug	
	Yes: T02	No: E13
T02	Check: Short to Ground/Interruption of Voltage Supply Circuit	greater than 11 V
	• Ignition OFF • Disconnect wiring harness connector from: Glow Controller • Measure voltage between the following terminals: Glow Controller – Wiring harness connector (wiring harness side) terminal E72-7 & Ground	
	Yes: T03	No: T11
T03	Check: Circuit Interruption of Ground Circuit	greater than 11 V
	• Measure voltage between the following terminals: Glow Controller – Wiring harness connector (wiring harness side) terminal E72-7 & Glow Controller – Wiring harness connector (wiring harness side) terminal E72-6	
	Yes: T04	No: E09
T04	Check: Interruption of Voltage Supply Circuit	greater than 11 V
	• Ignition ON • Measure voltage between the following terminals: Glow Controller – Wiring harness connector (wiring harness side) terminal E72-1 & Ground	
	Yes: T05	No: E08
T05	Check: Short to Voltage of Signal Circuit	ON
	• Data List Parameter Glow Relay	
	Yes: T06	No: E07
T06	Check: Short to Ground/Interruption of Signal Circuit	OFF
	• Ignition OFF • Connect fused jumper wire to: Glow Controller – Wiring harness connector (wiring harness side) terminal E72-3 & Ground • Ignition ON • Data List Parameter Glow Relay	
	Yes: T07	No: E06

Test	Work Order Description	Nominal Value
T07	Check: Interruption of Signal Circuit	
	• Remove fused jumper wire • Scan Tool MISC test: Glow plug control • Press YES key ON Measure voltage between the following terminals: Glow Controller – Wiring harness connector (wiring harness side) terminal E72-8 & Battery voltage	greater than 11 V
	Yes: T08	No: E05
T08	Check: Short to Voltage of Signal Circuit	
	• Ignition OFF • Disconnect wiring harness connector from: ECM • Measure resistance between the following terminals: Glow Controller – Wiring harness connector (wiring harness side) terminal E72-8 & Ground	greater than 500 kOhm
	Yes: T09	No: E04
T09	Check: Short to Voltage of Signal Circuit	
	• Disconnect wiring harness connector from: Glow Plugs • Ignition ON • Measure voltage between: Glow Plugs – Wiring harness connector (wiring harness side) terminal D34-1, D35-1, D36-1, D37-1 & Ground	less than 0.3 V
	Yes: T10	No: E03
T10	Check: Short to Ground/Interruption of Signal Circuit	
	• Ignition OFF • Measure resistance between the following terminals: Glow Controller – Wiring harness connector (wiring harness side) terminal E72-4, E72-5 & Ground	greater than 500 kOhm
	Yes: E01	No: E02
T11	Check: Component	
	• Remove electrical component from socket: Circuit Main Fuse • Check the following component for proper operation: Circuit Main Fuse	Test okay?
	Yes: T12	No: E12

Test	Work Order Description	Nominal Value
T12	Check: Interruption of Voltage Supply Circuit	
	• Measure voltage between the following terminals: Circuit Main Fuse – Input contact & Ground	greater than 11 V
	Yes: E10	No: E11

Result Table (For RB413D)

Result	Cause Of Fault
E01	• Circuit interruption between: Glow Controller – Wiring harness connector (wiring harness side) terminal E72-4, E72-5 & Glow Plugs – Wiring harness connector (wiring harness side) terminal D34-1, D35-1, D36-1, D37-1 or • Defective component: Glow Controller
E02	• Short circuit to ground between: Glow Controller – Wiring harness connector (wiring harness side) terminal E72-4, E72-5 & Glow Plugs – Wiring harness connector (wiring harness side) terminal D34-1, D35-1, D36-1, D37-1
E03	• Short circuit to voltage between: Glow Controller – Wiring harness connector (wiring harness side) terminal E72-4, E72-5 & Glow Plugs – Wiring harness connector (wiring harness side) terminal D34-1, D35-1, D36-1, D37-1 or • Defective component: Glow Controller
E04	• Short circuit to ground between: ECM – Wiring harness connector (wiring harness side) terminal G88-74 & Glow Controller – Wiring harness connector (wiring harness side) terminal E72-8
E05	• Short circuit to voltage/interruption of circuit between: ECM – Wiring harness connector (wiring harness side) terminal G88-74 & Glow Controller – Wiring harness connector (wiring harness side) terminal E72-8 or • Defective component: ECM **NOTE:** **If ECM is replaced, register vehicle specification into ECM by performing procedure described in "ECM registration" in Section 6E3.**
E06	• Short circuit to voltage/interruption of circuit between: ECM – Wiring harness connector (wiring harness side) terminal G88-70 & Glow Controller – Wiring harness connector (wiring harness side) terminal E72-3 or • Defective component: ECM **NOTE:** **If ECM is replaced, register vehicle specification into ECM by performing procedure described in "ECM registration" in Section 6E3.**

Result	Cause Of Fault
E07	• Short circuit to ground between: ECM – Wiring harness connector (wiring harness side) terminal G88-70 & Glow Controller – Wiring harness connector (wiring harness side) terminal E72-3 or • Defective component: ECM **NOTE:** **If ECM is replaced, register vehicle specification into ECM by performing procedure described in "ECM registration" in Section 6E3.**
E08	• Circuit interruption between: Circuit Fuse – Output contact & Glow Controller – Wiring harness connector (wiring harness side) terminal E72-1
E09	• Circuit interruption between: Glow Controller – Wiring harness connector (wiring harness side) terminal E72-6 & Ground
E10	• Circuit interruption between: Circuit Main Fuse – Output contact & Glow Controller – Wiring harness connector (wiring harness side) terminal E72-7
E11	• Circuit interruption between: Battery positive (+) terminal & Circuit Main Fuse – Input contact
E12	• Short circuit to ground between: Circuit Main Fuse – Output contact & Glow Controller – Wiring harness connector (wiring harness side) terminal E72-7
E13	• Defective component: Glow Plugs

C-34, Glow Time Telltale Circuit

Test Table (For RM413D)

Test	Work Order Description	Nominal Value
T01	Check: Component	
	• Ignition OFF • Ignition ON • Is at least one of the following indicator ON? – Charge Indicator Lamp – ABS warning Lamp – AIR BAG warning Lamp	Test okay?
	Yes: T02	No: E05
T02	Check: Short to Voltage/Ground/Interruption of Signal Circuit	
	• Ignition OFF • Disconnect wiring harness connector from: ECM (Wiring Harness Connector E27) • Ignition ON • Is the following indicator OFF? Glow indicator Lamp	Test okay?
	Yes: T03	No: E04
T03	Check: Interruption of Signal Circuit	
	• Connect fused jumper wire to: ECM – Wiring harness connector (wiring harness side) terminal E27-52 & Ground • Is the following indicator ON? Glow indicator Lamp	Test okay?
	Yes: T04	No: E03
T04	Check: Short to Voltage of Signal Circuit	
	• Ignition OFF • Remove fused jumper wire • Disconnect wiring harness connector from: Combination Meter • Ignition ON • Measure voltage between the following terminals: Combination Meter – Wiring harness connector (wiring harness side) terminal G22-10 & Ground	less than 0.3 V
	Yes: E01	No: E02

Result Table (For RM413D)

Result	Cause Of Fault
E01	• Defective component: ECM **NOTE:** **If ECM is replaced, register vehicle specification into ECM by performing procedure described in "ECM registration" in Section 6E3.**
E02	• Short circuit to voltage between: ECM – Wiring harness connector (wiring harness side) terminal E27-52 & Combination Meter – Wiring harness connector (wiring harness side) terminal G22-10
E03	• Circuit interruption between: ECM – Wiring harness connector (wiring harness side) terminal E27-52 & Combination Meter – Wiring harness connector (wiring harness side) terminal G22-10 or • Defective component: Combination Meter
E04	• Short circuit to ground between: ECM – Wiring harness connector (wiring harness side) terminal E27-52 & Combination Meter – Wiring harness connector (wiring harness side) terminal E22-10
E05	• Circuit interruption between: Circuit Fuse – Output contact & Combination Meter – Wiring harness connector (wiring harness side) terminal G22-11 or • Defective component: Combination Meter

Test Table (For RB413D)

Test	Work Order Description	Nominal Value
T01	Check: Component	Test okay?
	• Ignition OFF • Ignition ON • Is at least one of the following indicator ON? – Charge Indicator Lamp – ABS warning Lamp – AIR BAG warning Lamp	
	Yes: T02	No: E05
T02	Check: Short to Voltage/Ground/Interruption of Signal Circuit	Test okay?
	• Ignition OFF • Disconnect wiring harness connector from: ECM (Wiring Harness Connector G88) • Ignition ON • Is the following telltale OFF? Glow indicator Lamp	
	Yes: T03	No: E04
T03	Check: Interruption of Signal Circuit	Test okay?
	• Connect fused jumper wire to: ECM – Wiring harness connector (wiring harness side) terminal G88-52 & Ground • Is the following telltale ON? Glow indicator Lamp	
	Yes: T04	No: E03
T04	Check: Short to Voltage of Signal Circuit	less than 0.3 V
	• Ignition OFF • Remove fused jumper wire • Disconnect wiring harness connector from: Combination Meter • Ignition ON • Measure voltage between the following terminals: Combination Meter – Wiring harness connector (wiring harness side) terminal G25-5 & Ground	
	Yes: E01	No: E02

Result Table (For RB413D)

Result	Cause Of Fault
E01	• Defective component: ECM **NOTE:** **If ECM is replaced, register vehicle specification into ECM by performing procedure described in "ECM registration" in Section 6E3.**
E02	• Short circuit to voltage between: ECM – Wiring harness connector (wiring harness side) terminal G88-52 & Combination Meter – Wiring harness connector (wiring harness side) terminal G25-5
E03	• Circuit interruption between: ECM – Wiring harness connector (wiring harness side) terminal G88-52 & Combination Meter – Wiring harness connector (wiring harness side) terminal G25-5 or • Defective component: Combination Meter
E04	• Short circuit to ground between: ECM – Wiring harness connector (wiring harness side) terminal G88-52 & Combination Meter – Wiring harness connector (wiring harness side) terminal E25-5
E05	• Circuit interruption between: Circuit Fuse – Output contact & Combination Meter – Wiring harness connector (wiring harness side) terminal G25-15 or • Defective component: Combination Meter

C-35, Filterheating Circuit

Test Table (For RM413D)

Test	Work Order Description	Nominal Value
T01	Check: Short to Ground/Interruption of Voltage Supply Circuit	
	• Ignition OFF • Remove electrical component from socket: Fuel Heating Relay • Measure voltage between: Fuel Heating Relay – Socket Terminal E59-2 & Ground	greater than 11 V
	Yes: T02	No: T12
T02	Check: Interruption of Voltage Supply Circuit	
	• Ignition ON • Measure voltage between: Fuel Heating Relay – Socket Terminal E59-4 & Ground	greater than 11 V
	Yes: T03	No: E09
T03	Check: Short to Voltage of Voltage Supply Circuit	
	• Measure voltage between: Fuel Heating Relay – Socket Terminal E59-5 & Ground	less than 0.3 V
	Yes: T04	No: T11
T04	Check: Short to Voltage of Signal Circuit	
	• Ignition OFF • Disconnect wiring harness connector from: ECM (Wiring Harness Connector E27) • Ignition ON • Measure voltage between: Fuel Heating Relay – Socket Terminal E59-1 & Ground	less than 0.3 V
	Yes: T05	No: E07
T05	Check: Short to Ground of Signal Circuit	
	• Ignition OFF • Measure resistance between: Fuel Heating Relay – Socket Terminal E59-1 & Ground	greater than 500 kOhm
	Yes: T06	No: E06
T06	Check: Interruption of Signal Circuit	
	• Measure resistance between: ECM – Wiring harness connector (wiring harness side) terminal E27-76 & Fuel Heating Relay – Socket Terminal E59-1	less than 5 Ohm
	Yes: T07	No: E05

Test	Work Order Description	Nominal Value
T07	Check: Interruption of Voltage Supply Circuit	
	• Disconnect wiring harness connector from: Fuel Heater and Temperature Sensor • Connect fused jumper wire to: Fuel Heating Relay – Socket Terminal E59-2 & Fuel Heating Relay – Socket Terminal E59-5 • Measure voltage between: Fuel Heater and Temperature Sensor – Wiring harness connector (wiring harness side) terminal E50-2 & Ground	greater than 11 V
	Yes: T08	No: E04
T08	Check: Circuit Interruption of Ground Circuit	
	• Measure voltage between: Fuel Heater and Temperature Sensor – Wiring harness connector (wiring harness side) terminal E50-2 & Fuel Heater and Temperature Sensor – Wiring harness connector (wiring harness side) terminal E50-1	greater than 11 V
	Yes: T09	No: E03
T09	Check: Component	
	• Ignition OFF • Insert electrical component in socket: Fuel Heating Relay • Ignition ON • Measure voltage between the following terminals ECM – Wiring harness connector (wiring harness side) terminal E27-76 & Ground	greater than 11 V
	Yes: T10	No: E02
T10	Check: Component	
	• Ignition OFF • Connect fused jumper wire to: ECM – Wiring harness connector (wiring harness side) terminal E27-76 & Ground • Ignition ON • Measure voltage between the following terminals Fuel Heater and Temperature Sensor – Wiring harness connector (wiring harness side) terminal E50-2 & Ground	greater than 11 V
	Yes: E01	No: E02

Test	Work Order Description	Nominal Value
T11	Check: Short to Voltage of Voltage Supply Circuit	
	• Ignition OFF • Disconnect wiring harness connector from: Fuel Heater and Temperature Sensor • Ignition ON • Measure voltage between: Fuel Heating Relay – Socket Terminal E59-5 & Ground	less than 0.3 V
	Yes: E01	No: E08
T12	Check: Short to Ground/Interruption of Voltage Supply Circuit	
	• Remove electrical component from socket: Circuit Main Fuse • Check the following component for proper operation: Circuit Main Fuse	Test okay?
	Yes: T13	No: T14
T13	Check: Interruption of Voltage Supply Circuit	
	• Measure voltage between: Circuit Main Fuse – Input contact & Ground	greater than 11 V
	Yes: E10	No: E11
T14	Check: Short to Ground of Voltage Supply Circuit	
	• Insert new fuse and then check the fuse for proper operation.	Test okay?
	Yes: T15	No: E13
T15	Check: Short to Ground of Voltage Supply Circuit	
	• Measure voltage between: Fuel Heating Relay – Socket Terminal E59-5 & Battery voltage	less than 0.3 V
	Yes: E02	No: E12

Result Table (For RM413D)

Result	Cause Of Fault
E01	• Defective component: Fuel Heater and Temperature Sensor or ECM **NOTE:** • **The replacement of the components must be done in the listed order: The system must be checked for proper operation after every replacement.** • **If ECM is replaced, register vehicle specification into ECM by performing procedure described in "ECM registration" in Section 6E3.**
E02	• Defective component: Fuel Heating Relay
E03	• Circuit interruption between: Fuel Heater and Temperature Sensor – Wiring harness connector (wiring harness side) terminal E50-1 & Ground
E04	• Circuit interruption between: Fuel Heating Relay – Socket Terminal E59-5 & Fuel Heater and Temperature Sensor – Wiring harness connector (wiring harness side) terminal E50-2
E05	• Circuit interruption between: ECM – Wiring harness connector (wiring harness side) terminal E27-76 & Fuel Heating Relay – Socket Terminal E59-1
E06	• Short circuit to ground between: ECM – Wiring harness connector (wiring harness side) terminal E27-76 & Fuel Heating Relay – Socket Terminal E59-1
E07	• Short circuit to voltage between: ECM – Wiring harness connector (wiring harness side) terminal E27-76 & Fuel Heating Relay – Socket Terminal E59-1
E08	• Short circuit to voltage between: Fuel Heating Relay – Socket Terminal E59-5 & Fuel Heater and Temperature Sensor – Wiring harness connector (wiring harness side) terminal E50-2
E09	• Circuit interruption between: Circuit Fuse – Output contact & Fuel Heating Relay – Socket Terminal E59-4
E10	• Circuit interruption between: Circuit Main Fuse – Output contact & fuel Heating Relay – Socket Terminal E59-2

E11	• Circuit interruption between: System Main Fuse – Output contact & Circuit Main Fuse – Input contact
E12	• Short circuit to ground between: Fuel Heating Relay – Socket Terminal E59-5 & Fuel Heater and Temperature Sensor – Wiring harness connector (wiring harness side) terminal E50-2 or • Defective component: Fuel Heater and Temperature Sensor
E13	• Short circuit to ground between: Circuit Main Fuse – Output contact & Fuel Heating Relay – Socket Terminal E59-2

Test Table (For RB413D)

Test	Work Order Description	Nominal Value
T01	Check: Short to Ground/Interruption of Voltage Supply Circuit	
	• Ignition OFF • Remove electrical component from socket: Fuel Heating Relay • Measure voltage between the following terminals: Fuel Heating Relay – Socket Terminal E74-2 & Ground	greater than 11 V
	Yes: T02	No: T12
T02	Check: Interruption of Voltage Supply Circuit	
	• Ignition ON • Measure voltage between the following terminals: Fuel Heating Relay – Socket Terminal E74-4 & Ground	greater than 11 V
	Yes: T03	No: E09
T03	Check: Short to Voltage of Voltage Supply Circuit	
	• Measure voltage between the following terminals: Fuel Heating Relay – Socket Terminal E74-5 & Ground	less than 0.3 V
	Yes: T04	No: T11
T04	Check: Short to Voltage of Signal Circuit	
	• Ignition OFF • Disconnect wiring harness connector from: ECM (Wiring Harness Connector G88) • Ignition ON • Measure voltage between the following terminals: Fuel Heating Relay – Socket Terminal E74-1 & Ground	less than 0.3 V
	Yes: T05	No: E07
T05	Check: Short to Ground of Signal Circuit	
	• Ignition OFF • Measure resistance between the following terminals: Fuel Heating Relay – Socket Terminal E74-1 & Ground	greater than 500 kOhm
	Yes: T06	No: E06
T06	Check: Interruption of Signal Circuit	
	• Measure resistance between the following terminals: ECM – Wiring harness connector (wiring harness side) terminal G88-76 & Fuel Heating Relay – Socket Terminal E74-1	less than 5 Ohm
	Yes: T07	No: E05

Test	Work Order Description	Nominal Value
T07	Check: Interruption of Voltage Supply Circuit	
	• Disconnect wiring harness connector from: Fuel Heater and Temperature Sensor • Connect fused jumper wire to: Fuel Heating Relay – Socket Terminal E74-2 & Fuel Heating Relay – Socket Terminal E74-5 • Measure voltage between the following terminals: Fuel Heater and Temperature Sensor – Wiring harness connector (wiring harness side) terminal E67-2 & Ground	greater than 11 V
	Yes: T08	No: E04
T08	Check: Circuit Interruption of Ground Circuit	
	• Measure voltage between the following terminals: Fuel Heater and Temperature Sensor – Wiring harness connector (wiring harness side) terminal E67-2 & Fuel Heater and Temperature Sensor – Wiring harness connector (wiring harness side) terminal E67-1	greater than 11 V
	Yes: T09	No: E03
T09	Check: Component	
	• Ignition OFF • Insert electrical component in socket: Fuel Heating Relay • Ignition ON • Measure voltage between the following terminals: ECM – Wiring harness connector (wiring harness side) terminal G88-76 & Ground	greater than 11 V
	Yes: T10	No: E02
T10	Check: Component	
	• Ignition OFF • Connect fused jumper wire to: ECM – Wiring harness connector (wiring harness side) terminal G88-76 & Ground • Ignition ON • Measure voltage between the following terminals Fuel Heater and Temperature Sensor – Wiring harness connector (wiring harness side) terminal E67-2 & Ground	greater than 11 V
	Yes: E01	No: E02

Test	Work Order Description	Nominal Value
T11	Check: Short to Voltage of Voltage Supply Circuit	
	• Ignition OFF • Disconnect wiring harness connector from: Fuel Heater and Temperature Sensor • Ignition ON • Measure voltage between the following terminals: Fuel Heating Relay – Socket Terminal E74-5 & Ground	less than 0.3 V
	Yes: E01	No: E08
T12	Check: Short to Ground/Interruption of Voltage Supply Circuit	
	• Remove electrical component from socket: Circuit Main Fuse • Check the following component for proper operation: Circuit Main Fuse	Test okay?
	Yes: T13	No: T14
T13	Check: Interruption of Voltage Supply Circuit	
	• Measure voltage between the following terminals: Circuit Main Fuse – Input contact & Ground	greater than 11 V
	Yes: E10	No: E11
T14	Check: Short to Ground of Voltage Supply Circuit	
	• Insert new fuse and then check the fuse for proper operation.	Test okay?
	Yes: T15	No: E13
T15	Check: Short to Ground of Voltage Supply Circuit	
	• Measure voltage between the following terminals: Fuel Heating Relay – Socket Terminal E74-5 & Battery voltage	less than 0.3 V
	Yes: E02	No: E12

Result Table (For RB413D)

Result	Cause Of Fault
E01	• Defective component: Fuel Heater and Temperature Sensor or ECM **NOTE:** • **The replacement of the components must be done in the listed order. The system must be checked for proper operation after every replacement.** • **If ECM is replaced, register vehicle specification into ECM by performing procedure described in "ECM registration" in Section 6E3.**
E02	• Defective component: Fuel Heating Relay
E03	• Circuit interruption between: Fuel Heater and Temperature Sensor – Wiring harness connector (wiring harness side) terminal E67-1 & Ground
E04	• Circuit interruption between: Fuel Heating Relay – Socket Terminal E74-5 & Fuel Heater and Temperature Sensor – Wiring harness connector (wiring harness side) terminal E67-2
E05	• Circuit interruption between: ECM – Wiring harness connector (wiring harness side) terminal G88-76 & Fuel Heating Relay – Socket Terminal E74-1
E06	• Short circuit to ground between: ECM – Wiring harness connector (wiring harness side) terminal G88-76 & Fuel Heating Relay – Socket Terminal E74-1
E07	• Short circuit to voltage between: ECM – Wiring harness connector (wiring harness side) terminal G88-76 & Fuel Heating Relay – Socket Terminal E74-1
E08	• Short circuit to voltage between: Fuel Heating Relay – Socket Terminal E74-5 & Fuel Heater and Temperature Sensor – Wiring harness connector (wiring harness side) terminal E67-2
E09	• Circuit interruption between: Circuit Fuse – Output contact & Fuel Heating Relay – Socket Terminal E74-4
E10	• Circuit interruption between: Circuit Main Fuse – Output contact & Fuel Heating Relay – Socket Terminal E74-2

E11	• Circuit interruption between: System Main Fuse – Output contact & Circuit Main Fuse – Input contact
E12	• Short circuit to ground between: Fuel Heating Relay – Socket Terminal E74-5 & Fuel Heater and Temperature Sensor – Wiring harness connector (wiring harness side) terminal E67-2 or • Defective component: Fuel Heater and Temperature Sensor
E13	• Short circuit to ground between: Circuit Main Fuse – Output contact & Fuel Heating Relay – Socket Terminal E74-2

C-36, Malfunction Indication Lamp (MIL) Circuit

Test Table (For RM413D)

Test	Work Order Description	Nominal Value
T01	Check: Component	Test okay?
	• Ignition OFF • Ignition ON • Is at least one of the following indicator ON? Charge Indicator Lamp ABS Warning Lamp Air Bag Warning Lamp	
	Yes: T02	No: E05
T02	Check: Short to Voltage/Ground/Interruption of Signal Circuit	Test okay?
	• Ignition OFF • Disconnect wiring harness connector from: ECM (Wiring Harness Connector E27) • Ignition ON • Is the following indicator OFF? Malfunction Indicator Lamp	
	Yes: T03	No: T05
T03	Check: Interruption of Signal Circuit	Test okay?
	• Connect fused jumper wire to: ECM – Wiring harness connector (wiring harness side) terminal E27-78 & Ground • Is the following indicator ON? Malfunction Indicator Lamp	
	Yes: T04	No: E03
T04	Check: Short to Voltage of Signal Circuit	less than 0.3 V
	• Ignition OFF • Remove fused jumper wire • Disconnect wiring harness connector from: Combination meter • Ignition ON • Measure voltage between the following terminals: Combination meter – Wiring harness connector (wiring harness side) terminal G22-19 & Ground	
	Yes: E01	No: E02
T05	Check: Component	greater than 500 kOhm
	• Ignition OFF • Disconnect wiring harness connector from: Combination meter • Measure resistance between: ECM – Wiring harness connector (wiring harness side) terminal E27-78 & Ground	
	Yes: E01	No: E04

Result Table (For RM413D)

Result	Cause Of Fault
E01	• Defective component: ECM **NOTE:** **If ECM is replaced, register vehicle specification into ECM by performing procedure described in "ECM registration" in Section 6E3.**
E02	• Short circuit to voltage between: ECM – Wiring harness connector (wiring harness side) terminal E27-78 & Combination Meter – Wiring harness connector (wiring harness side) terminal G22-19
E03	• Circuit interruption between: ECM – Wiring harness connector (wiring harness side) terminal E27-78 & Combination Meter – Wiring harness connector (wiring harness side) terminal G22-19 or • Defective component: Combination Meter
E04	• Short circuit to ground between: ECM – Wiring harness connector (wiring harness side) terminal E27-78 & Combination Meter – Wiring harness connector (wiring harness side) terminal G22-19 or • Defective component: Combination Meter
E05	• Circuit interruption between: Circuit Fuse – Output contact & Combination Meter – Wiring harness connector (wiring harness side) terminal G22-11 or • Defective component: Combination Meter

Test Table (For RB413D)

Test	Work Order Description	Nominal Value
T01	Check: Component	Test okay?
	• Ignition OFF • Ignition ON • Is at least one of the following indicator ON? – Charge Indicator Lamp – ABS Warning Lamp – Air Bag Warning Lamp	
	Yes: T02	No: E05
T02	Check: Short to Voltage/Ground/Interruption of Signal Circuit	Test okay?
	• Ignition OFF • Disconnect wiring harness connector from: ECM (Wiring Harness Connector G88) • Ignition ON • Is the following indicator OFF? Malfunction Indicator Lamp	
	Yes: T03	No: T05
T03	Check: Interruption of Signal Circuit	Test okay?
	• Connect fused jumper wire to: ECM – Wiring harness connector (wiring harness side) terminal G88-78 & Ground • Is the following indicator ON? Malfunction Indicator Lamp	
	Yes: T04	No: E03
T04	Check: Short to Voltage of Signal Circuit	less than 0.3 V
	• Ignition OFF • Remove fused jumper wire • Disconnect wiring harness connector from: Combination meter • Ignition ON • Measure voltage between the following terminals: Combination meter – Wiring harness connector (wiring harness side) terminal G25-23 & Ground	
	Yes: E01	No: E02
T05	Check: Component	greater than 500 kOhm
	• Ignition OFF • Disconnect wiring harness connector from: Combination meter • Measure resistance between the following terminals: ECM – Wiring harness connector (wiring harness side) terminal G88-78 & Ground	
	Yes: E01	No: E04

Result Table (For RB413D)

Result	Cause Of Fault
E01	• Defective component: ECM **NOTE:** **If ECM is replaced, register vehicle specification into ECM by performing procedure described in "ECM registration" in Section 6E3.**
E02	• Short circuit to voltage between: ECM – Wiring harness connector (wiring harness side) terminal G88-78 & Combination Meter – Wiring harness connector (wiring harness side) terminal G25-23
E03	• Circuit interruption between: ECM – Wiring harness connector (wiring harness side) terminal G88-78 & Combination Meter – Wiring harness connector (wiring harness side) terminal G25-23 or • Defective component: Combination Meter
E04	• Short circuit to ground between: ECM – Wiring harness connector (wiring harness side) terminal G88-78 & Combination Meter – Wiring harness connector (wiring harness side) terminal G25-23 or • Defective component: Combination Meter
E05	• Circuit interruption between: Circuit Fuse – Output contact & Combination Meter – Wiring harness connector (wiring harness side) terminal G25-15 or • Defective component: Combination Meter

C-37, Service Telltale Circuit

Test Table (For RM413D)

Test	Work Order Description	Nominal Value
T01	Check: Component	Test okay?
	• Ignition OFF • Ignition ON • Is at least one of the following indicators ON? – Charge Indicator Lamp – ABS Warning Lamp – Air Bag Warning Lamp	
	Yes: T02	No: E04
T02	Check: Short to Voltage/Ground/Interruption of Signal Circuit	Test okay?
	• Ignition OFF • Disconnect wiring harness connector from: ECM (Wiring Harness Connector E27) • Ignition ON • Is the following indicator OFF? SVS Lamp	
	Yes: T03	No: E03
T03	Check: Interruption of Signal Circuit	Test okay?
	• Connect fused jumper wire to: ECM – Wiring harness connector (wiring harness side) terminal E27-77 & Ground • Is the following indicator ON? SVS Lamp	
	Yes: E01	No: E02

Result Table (RM413D)

Result	Cause Of Fault
E01	• Short circuit to voltage between: ECM – Wiring harness connector (wiring harness side) terminal E27-77 & Combination Meter – Wiring harness connector (wiring harness side) terminal G22-21 or • Defective component: ECM **NOTE:** **If ECM is replaced, register vehicle specification into ECM by performing procedure described in "ECM registration" in Section 6E3.**
E02	• Circuit interruption between: ECM – Wiring harness connector (wiring harness side) terminal E27-77 & Combination Meter – Wiring harness connector (wiring harness side) terminal G22-21 or • Defective component: Combination Meter
E03	• Short circuit to ground between: ECM – Wiring harness connector (wiring harness side) terminal E27-77 & Combination Meter – Wiring harness connector (wiring harness side) terminal G22-21 or • Defective component: Combination Meter
E04	• Circuit interruption between: Circuit Fuse – Output contact & Combination Meter – Wiring harness connector (wiring harness side) terminal G22-11 or • Defective component: Combination Meter

Test Table (For RB413D)

Test	Work Order Description	Nominal Value
T01	Check: Component	Test okay?
	• Ignition OFF • Ignition ON • Is at least one of the following indicators ON? – Charge Indicator Lamp – ABS Warning Lamp – Air Bag Warning Lamp	
	Yes: T02	No: E04
T02	Check: Short to Voltage/Ground/Interruption of Signal Circuit	Test okay?
	• Ignition OFF • Disconnect wiring harness connector from: ECM (Wiring Harness Connector G88) • Ignition ON • Is the following indicator OFF? SVS Lamp	
	Yes: T03	No: E03
T03	Check: Interruption of Signal Circuit	Test okay?
	• Connect fused jumper wire to: ECM – Wiring harness connector (wiring harness side) terminal G88-77 & Ground • Is the following indicator ON? SVS Lamp	
	Yes: E01	No: E02

Result Table (RB413D)

Result	Cause Of Fault
E01	• Short circuit to voltage between: ECM – Wiring harness connector (wiring harness side) terminal G88-77 & Combination Meter – Wiring harness connector (wiring harness side) terminal G25-8 or • Defective component: ECM **NOTE:** **If ECM is replaced, register vehicle specification into ECM by performing procedure described in "ECM registration" in Section 6E3.**
E02	• Circuit interruption between: ECM – Wiring harness connector (wiring harness side) terminal G88-77 & Combination Meter – Wiring harness connector (wiring harness side) terminal G25-8 or • Defective component: Combination Meter
E03	• Short circuit to ground between: ECM – Wiring harness connector (wiring harness side) terminal G88-77 & Combination Meter – Wiring harness connector (wiring harness side) terminal G25-8 or • Defective component: Combination Meter
E04	• Circuit interruption between: Circuit Fuse – Output contact & Combination Meter – Wiring harness connector (wiring harness side) terminal G25-15 or • Defective component: Combination Meter

C-38, Oil Level Telltale Circuit

Test Table (For RM413D)

Test	Work Order Description	Nominal Value
T01	Check: Component	Test okay?
	• Ignition OFF • Ignition ON • Is at least one of the following indicators ON? – Charge Indicator Lamp – ABS Warning Lamp – Air Bag Warning Lamp	
	Yes: T02	No: E04
T02	Check: Short to Voltage/Ground/Interruption of Signal Circuit	Test okay?
	• Ignition OFF • Disconnect wiring harness connector from: ECM (Wiring Harness Connector E27) • Ignition ON • Is the following indicator OFF? Oil Level Warning Lamp	
	Yes: T03	No: E03
T03	Check: Interruption of Signal Circuit	Test okay?
	• Connect fused jumper wire to: ECM – Wiring harness connector (wiring harness side) terminal E27-51 & Ground • Is the following indicator ON? Oil Level Warning Lamp	
	Yes: E01	No: E02

Result Table (For RM413D)

Result	Cause Of Fault
E01	• Short circuit to voltage between: ECM – Wiring harness connector (wiring harness side) terminal E27-51 & Combination Meter – Wiring harness connector (wiring harness side) terminal G22-20 or • Defective component: ECM **NOTE:** **If ECM is replaced, register vehicle specification into ECM by performing procedure described in "ECM registration" in Section 6E3.**
E02	• Circuit interruption between: ECM – Wiring harness connector (wiring harness side) terminal E27-51 & Combination Meter – Wiring harness connector (wiring harness side) terminal G22-20 or • Defective component: Combination Meter
E03	• Short circuit to ground between: ECM – Wiring harness connector (wiring harness side) terminal E27-51 & Combination Meter – Wiring harness connector (wiring harness side) terminal G22-20 or • Defective component: Combination Meter
E04	• Circuit interruption between: Circuit Fuse – Output contact & Combination Meter – Wiring harness connector (wiring harness side) terminal G22-11 or • Defective component: Combination Meter

Test Table (For RB413D)

Test	Work Order Description	Nominal Value
T01	Check: Component	Test okay?
	• Ignition OFF • Ignition ON • Is at least one of the following indicators ON? – Charge Indicator Lamp – ABS Warning Lamp – Air Bag Warning Lamp	
	Yes: T02	No: E04
T02	Check: Short to Voltage/Ground/Interruption of Signal Circuit	Test okay?
	• Ignition OFF • Disconnect wiring harness connector from: ECM (Wiring Harness Connector G88) • Ignition ON • Is the following telltale OFF? Oil Level Warning Lamp	
	Yes: T03	No: E03
T03	Check: Interruption of Signal Circuit	Test okay?
	• Connect fused jumper wire to: ECM – Wiring harness connector (wiring harness side) terminal G88-51 & Ground • Is the following telltale ON? Oil Level Warning Lamp	
	Yes: E01	No: E02

Result Table (For RB413D)

Result	Cause Of Fault
E01	• Short circuit to voltage between: ECM – Wiring harness connector (wiring harness side) terminal G88-51 & Combination Meter – Wiring harness connector (wiring harness side) terminal G25-27 or • Defective component: ECM **NOTE:** **If ECM is replaced, register vehicle specification into ECM by performing procedure described in "ECM registration" in Section 6E3.**
E02	• Circuit interruption between: ECM – Wiring harness connector (wiring harness side) terminal G88-51 & Combination Meter – Wiring harness connector (wiring harness side) terminal G25-27 or • Defective component: Combination Meter
E03	• Short circuit to ground between: ECM – Wiring harness connector (wiring harness side) terminal G88-51 & Combination Meter – Wiring harness connector (wiring harness side) terminal G25-27 or • Defective component: Combination Meter
E04	• Circuit interruption between: Circuit Fuse – Output contact & Combination Meter – Wiring harness connector (wiring harness side) terminal G25-15 or • Defective component: Combination Meter

C-39, Engine Oil Level Circuit

Test Table (For RM413D)

Test	Work Order Description	Nominal Value
T01	Check: Mechanical Function	
	• Check Engine Oil Level	Is the oil level too low?
	Yes: E01	No: T02
T02	Check: Interruption of signal Circuit	
	• Ignition OFF • Disconnect wiring harness connector from: ECM and Oil Level Switch • Measure resistance between the following terminals: ECM – Wiring harness connector (wiring harness side) terminal E27-26 & Oil Level Switch – Wiring harness connector (wiring harness side) terminal C33-1	less than 5 Ohm
	Yes: T03	No: E02
T03	Check: Short to Ground of Signal Circuit	
	• Measure resistance between the following terminals: ECM – Wiring harness connector (wiring harness side) terminal E27-26 & Ground	greater than 500 kOhm
	Yes: T04	No: E03
T04	Check: Circuit Interruption of Ground Circuit	
	• Measure resistance between the following terminals: Oil Level Switch – Wiring harness connector (wiring harness side) terminal C33-2 & Ground	less than 5 Ohm
	Yes: T05	No: E04
T05	Check: Short to Voltage of Signal Circuit	
	• Measure voltage between the following terminals: Oil Level Switch – Wiring harness connector (wiring harness side) terminal C33-1 & Ground	less than 0.3 V
	Yes: T06	No: E05
T06	Check: Component	
	• Connect wiring harness connector to: Oil Level Switch • Measure resistance between the following terminals: ECM – Wiring harness connector (wiring harness side) terminal E27-26 & Ground	less than 5 Ohm
	Yes: E06	No: E07

Result Table (For RM413D)

Result	Cause Of Fault
E01	• Correct engine oil level.
E02	• Circuit interruption between: ECM – Wiring harness connector (wiring harness side) terminal E27-26 & Oil Level Switch – Wiring harness connector (wiring harness side) terminal C33-1
E03	• Short circuit to ground between: ECM – Wiring harness connector (wiring harness side) terminal E27-26 & Oil Level Switch – Wiring harness connector (wiring harness side) terminal C33-1
E04	• Circuit interruption between: Oil Level Switch – Wiring harness connector (wiring harness side) terminal C33-2 & Ground
E05	• Short circuit to voltage between: ECM – Wiring harness connector (wiring harness side) terminal E27-26 & Oil Level Switch – Wiring harness connector (wiring harness side) terminal C33-1
E06	• Defective component ECM **NOTE:** **If ECM is replaced, register vehicle specification into ECM by performing procedure described in "ECM registration" in Section 6E3.**
E07	• Defective component Oil Level Switch

Test Table (For RB413D)

Test	Work Order Description	Nominal Value
T01	Check: Mechanical Function	
	• Check Engine Oil Level	Is the oil level too low?
	Yes: E01	No: T02
T02	Check: Interruption of signal Circuit	
	• Ignition OFF • Disconnect wiring harness connector from: ECM • Disconnect wiring harness connector from: Oil Level Switch • Measure resistance between the following terminals: ECM – Wiring harness connector (wiring harness side) terminal G88-26 & Oil Level Switch – Wiring harness connector (wiring harness side) terminal C32-1	less than 5 Ohm
	Yes: T03	No: E02
T03	Check: Short to Ground of Signal Circuit	
	• Measure resistance between the following terminals: ECM – Wiring harness connector (wiring harness side) terminal G88-26 & Ground	greater than 500 kOhm
	Yes: T04	No: E03
T04	Check: Circuit Interruption of Ground Circuit	
	• Measure resistance between the following terminals: Oil Level Switch – Wiring harness connector (wiring harness side) terminal C32-2 & Ground	less than 5 Ohm
	Yes: T05	No: E04
T05	Check: Short to Voltage of Signal Circuit	
	• Measure voltage between the following terminals: Oil Level Switch – Wiring harness connector (wiring harness side) terminal C32-1 & Ground	less than 0.3 V
	Yes: T06	No: E05
T06	Check: Component	
	• Connect wiring harness connector to: Oil Level Switch • Measure resistance between the following terminals: ECM – Wiring harness connector (wiring harness side) terminal G88-26 & Ground	less than 5 Ohm
	Yes: E06	No: E07

Result Table (For RB413D)

Result	Cause Of Fault
E01	• Correct engine oil level.
E02	• Circuit interruption between: ECM – Wiring harness connector (wiring harness side) terminal G88-26 & Oil Level Switch – Wiring harness connector (wiring harness side) terminal C32-1
E03	• Short circuit to ground between: ECM – Wiring harness connector (wiring harness side) terminal G88-26 & Oil Level Switch – Wiring harness connector (wiring harness side) terminal C32-1
E04	• Circuit interruption between: Oil Level Switch – Wiring harness connector (wiring harness side) terminal C32-2 & Ground
E05	• Short circuit to voltage between: ECM – Wiring harness connector (wiring harness side) terminal G88-26 & Oil Level Switch – Wiring harness connector (wiring harness side) terminal C32-1
E06	• Defective component ECM **NOTE:** **If ECM is replaced, register vehicle specification into ECM by performing procedure described in "ECM registration" in Section 6E3.**
E07	• Defective component Oil Level Switch

C-40, Vehicle Speed Sensor Circuit

Result Table (For RM413D)

Result	Cause Of Fault
E01	• Circuit interruption between: Combination Meter – Wiring harness connector (wiring harness side) terminal G21-15 & ECM – Wiring harness connector (wiring harness side) terminal E27-89 or • Defective component: ECM **NOTE:** **If ECM is replaced, register vehicle specification into ECM by performing procedure described in "ECM registration" in Section 6E3.**

Result Table (For RB413D)

Result	Cause Of Fault
E01	• Circuit interruption between: Combination Meter – Wiring harness connector (wiring harness side) terminal G25-2 & ECM – Wiring harness connector (wiring harness side) terminal G88-89 or • Defective component: ECM **NOTE:** **If ECM is replaced, register vehicle specification into ECM by performing procedure described in "ECM registration" in Section 6E3.**

C-41, Function-Group Intake Air System

Result Table

Result	Cause Of Fault
E01	• Defective component: component, that is recognized as defective **NOTE:** **If ECM is replaced, register vehicle specification into ECM by performing procedure described in "ECM registration" in Section 6E3.**

C-42, Function-Group Fuel System

Test Table

Test	Work Order Description	Nominal Value
T01	Check: Diagnostic Trouble Code stored	
	Is the following Diagnostic Trouble Code stored? P1660 – Shut Off Valve	
	Yes: E01	No: E02

Result Table

Result	Cause Of Fault
E01	• Mechanical fault in the low-pressure section • Check the following mechanical fault sources: – The low pressure fuel pump delivery rate is too low – Shut-off valve in high pressure fuel pump or • Defective component: Fuel Pump or High-pressure fuel pump **NOTE:** **The replacement of the components must be done in the listed order.** **The system must be checked for proper operation after every replacement.**
E02	• Defective component: component, that is recognized as defective **NOTE:** **If ECM is replaced, register vehicle specification into ECM by performing procedure described in “ECM registration” in Section 6E3.**

C-43, Function-Group Low Pressure Section

Result Table

Result	Cause Of Fault
E01	• Mechanical fault in the low-pressure section • Check the following mechanical fault sources: – Screen in fuel tank – Pressure relief valve in fuel tank – The low pressure fuel pump delivery rate is too low – Overflow valve in fuel filter – Shut-off valve in high pressure fuel pump or • Defective component: component, that is recognized as defective

C-44, Function-Group Low and High Pressure Section

Result Table

Result	Cause Of Fault
E01	• Mechanical fault in the low-pressure section or • Mechanical fault in the high pressure section • Check the following mechanical fault sources: – Screen in fuel tank – Pressure relief valve in fuel tank – The low pressure fuel pump delivery rate is too low – Overflow valve in fuel filter – Shut-off valve in high pressure fuel pump – The high pressure fuel pump delivery rate is too low or • Defective component: component, that is recognized as defective **NOTE:** **If ECM is replaced, register vehicle specification into ECM by performing procedure described in “ECM registration” in Section 6E3.**

C-45, Function-Group High Pressure Area

Result Table

Result	Cause Of Fault
E01	• Mechanical fault in the high pressure section • Check all mechanical components of the concerned system. or • Defective component: component, that is recognized as defective **NOTE:** **If ECM is replaced, register vehicle specification into ECM by performing procedure described in "ECM registration" in Section 6E3.**

C-46, Starter Circuit

Test Table (For RM413D)

Test	Work Order Description	Nominal Value
T01	Check: Starter	
	• Check the following component for proper operation: Starting Motor • Turn ignition switch to ST position	Does the starter crank?
	Yes: T02	No: T14
T02	Check: Battery Voltage	
	• Verify battery condition • Measure voltage between the following terminals: Battery – Positive (+) terminal & Ground	greater than 11 V
	Yes: T03	No: T13
T03	Load Simulation	
	• Check battery condition under load simulation Measure voltage between the following terminals: Battery – Positive (+) terminal & Ground • Check current consumption with current probe Connect current probe to following lead: Starting Motor – Terminal C45-1 • Turn ignition switch to ST position • Check current consumption and battery voltage both at the same time	less than 400 A and Battery voltage is less than 8 V
	Yes: T04	No: T10
T04	Check: Engine Start	
	• Charge or replace battery or • Connect loaded battery parallel to the battery in the vehicle • Try to start engine once more	Does the engine start?
	Yes: T05	No: T10
T05	Check: Component	
	• Check charge by generator Measure voltage between: Generator – C47-1 & Ground • Engine running • Increase engine speed to 3000 rpm	13.4 ... 14.5 V Engine running at idle speed, operating temperature All consumers turned off
	Yes: T06	No: T09

Test	Work Order Description	Nominal Value
T06	Check: Component	
	• Check stall current • Measure current between the following terminals: Battery – Positive (+) terminal & Battery – Wiring harness **NOTE:** **All vehicle systems must be switched OFF during these tests. Doors must be closed, engine compartment lighting must be disconnected.**	Stall current greater than 50 mA?
	Yes: T07	No: E03
T07	Check: Component	
	• Check stall current Remove consecutively all fuses from the fuse-boxes.	Does the stall current change to a value less than 50 mA after removing a fuse?
	Yes: T08	No: E02
T08	Check: Component	
	• Check stall current • Install following component: Last removed fuse • Disconnect consecutively all components which are connected to the circuit behind this fuse.	Does the stall current change to a value less than 50 mA after removing a component?
	Yes: E01	No: E02
T09	Check: Component	
	• Check the following circuit for proper operation: Wiring harness to generator terminal C42-1 Wiring harness to generator terminal C47-1 Check all ground connections	Test okay?
	Yes: E04	No: E05
T10	Load Simulation	
	• Check battery condition under load simulation Measure voltage between the following terminals: Battery – Positive (+) terminal & Ground • Check current consumption with current probe Connect current probe to following lead: Starting Motor – Terminal C45-1 • Turn ignition switch to ST position • Check current consumption and battery voltage both at the same time	Less than 400 A and more than 8 V? Go to YES More than 400 A and less than 8 V? Go to NO
	Yes: T11	No: E09
T11	Check: Component	
	• Check wiring harness and connectors to battery and starter	Connectors okay? Is the ground connection okay?
	Yes: T12	No: E08

Test	Work Order Description	Nominal Value
T12	Check: Component	
	• Verify mechanical system functions/components – Check engine mechanic – Check freedom of motion on crankshaft	Mechanical function check okay?
	Yes: E06	No: E07
T13	Check: Component	
	• Charge or replace battery • Measure voltage between the following terminals: Battery – Positive (+) terminal & Ground	greater than 11 V
	Yes: T10	No: E10
T14	Check: Battery Voltage	
	• Verify battery condition • Ignition ON • Turn all electrical consumers ON • Measure voltage between: Battery – Positive (+) terminal & Ground	greater than 11 V
	Yes: T15	No: T17
T15	Check: Component	
	• Check terminal G05-3 to ignition switch Measure voltage between: Starting Motor – Wiring harness connector (wiring harness side) terminal C46-1 & Ground • Turn ignition switch to ST position	greater than 11 V
	Yes: T11	No: T16
T16	Check: Component	
	• Check the following component for proper operation: Ignition Switch – Terminal G05-3	Test okay?
	Yes: E11	No: E12
T17	Check: Engine Start	
	• Charge or replace battery or • Connect loaded battery parallel to the battery in the vehicle • Try to start engine once more	Does the starter crank?
	Yes: T05	No: T15

Result Table (For RM413D)

Result	Cause Of Fault
E01	• Defective component: Last disconnected component
E02	Fault in wiring harness **NOTE:** **During fault searching in the wiring harness, the sections of the wiring harness can be separated at the assigned connectors. When the stall current changes to the permissible value after separating a section, the fault is located in the concerning section of the wiring harness.**
E03	• Battery discharged Cell shorted Corroded Contacts Bad ground connection
E04	• Defective component: Generator
E05	• Fault in wiring harness Wiring harness to generator terminal C42-1 or Wiring harness to generator terminal C47-1 or Bad ground connection
E06	• Circuit interruption between: Battery – Positive (+) terminal & Starting Motor – Wiring harness connector (wiring harness side) terminal C45-1 or • Defective component: Starting Motor
E07	• Mechanical engine problem
E08	• Repair/clean wiring harness and connectors to battery/starting motor
E09	• Mechanical engine problem or Defective component: Starting Motor **NOTE:** **The replacement of the components must be done in the listed order.** **The system must be checked for proper operation after every replacement.**
E10	• Defective component: Battery
E11	• Circuit interruption between: Ignition Switch – Wiring harness connector (wiring harness side) terminal G05-3 & Starting Motor – Wiring harness connector (wiring harness side) terminal C46-1
E12	• Defective component: Ignition Switch

Test Table (For RB413D)

Test	Work Order Description	Nominal Value
T01	Check: Starter	Does the starter crank?
	• Check the following component for proper operation: Starting Motor • Turn ignition switch to ST position	
	Yes: T02	No: T14
T02	Check: Battery Voltage	greater than 11 V
	• Verify battery condition • Measure voltage between the following terminals: Battery – Positive (+) terminal & Ground	
	Yes: T03	No: T13
T03	Load Simulation	less than 400 A and Battery voltage is less than 8 V
	• Check battery condition under load simulation Measure voltage between the following terminals: Battery – Positive (+) terminal & Ground • Check current consumption with current probe Connect current probe to following lead: Starting Motor – Terminal C05-1 • Turn ignition switch to ST position • Check current consumption and battery voltage both at the same time	
	Yes: T04	No: T10
T04	Check: Engine Start	Does the engine start?
	• Charge or replace battery or • Connect loaded battery parallel to the battery in the vehicle • Try to start engine once more	
	Yes: T05	No: T10
T05	Check: Component	13.4 ... 14.5 V Engine running at idle speed, operating temperature All consumers turned off
	• Check charge by generator Measure voltage between the following terminals: Generator – C08-1 & Ground • Engine running • Increase engine speed to 3000 rpm	
	Yes: T06	No: T09

Test	Work Order Description	Nominal Value
T06	Check: Component	
	• Check stall current • Measure current between the following terminals: Battery – Positive (+) terminal & Battery – Positive (+) terminal Wiring harness **NOTE:** **All vehicle systems must be switched OFF during these tests. Doors must be closed, engine compartment lighting must be disconnected.**	Stall current greater than 50 mA?
	Yes: T07	No: E03
T07	Check: Component	
	• Check stall current Remove consecutively all fuses from the fuse-boxes.	Does the stall current change to a value less than 50 mA after removing a fuse?
	Yes: T08	No: E02
T08	Check: Component	
	• Check stall current • Install following component: Last removed fuse • Disconnect consecutively all components which are connected to the circuit behind this fuse.	Does the stall current change to a value less than 50 mA after removing a component?
	Yes: E01	No: E02
T09	Check: Component	
	• Check the following circuit for proper operation: Wiring harness to generator terminal C07-1 Wiring harness to generator terminal C08-1 Check all ground connections	Test okay?
	Yes: E04	No: E05
T10	Load Simulation	
	• Check battery condition under load simulation Measure voltage between the following terminals: Battery – Positive (+) terminal & Ground • Check current consumption with current probe Connect current probe to following lead: Starting Motor – Terminal C05-1 • Turn ignition switch to ST position • Check current consumption and battery voltage both at the same time	Less than 400 A and more than 8 V? Go to YES More than 400 A and less than 8 V? Go to NO
	Yes: T11	No: E09
T11	Check: Component	
	• Check wiring harness and connectors to battery and starter	Connectors okay? Is the ground connection okay?
	Yes: T12	No: E08

Test	Work Order Description	Nominal Value
T12	Check: Component	
	• Verify mechanical system functions/components – Check engine mechanic – Check freedom of motion on crankshaft	Mechanical function check okay?
	Yes: E06	No: E07
T13	Check: Component	
	• Charge or replace battery • Measure voltage between the following terminals: Battery – Positive (+) terminal & Ground	greater than 11 V
	Yes: T10	No: E10
T14	Check: Battery Voltage	
	• Verify battery condition • Ignition ON • Turn all electrical consumers ON • Measure voltage between the following terminals: Battery – Positive (+) terminal & Ground	greater than 11 V
	Yes: T15	No: T17
T15	Check: Component	
	• Check terminal G24-3 to ignition switch Measure voltage between the following terminals: Starting Motor – Wiring harness connector (wiring harness side) terminal C06-1 & Ground • Turn ignition switch to ST position	greater than 11 V
	Yes: T11	No: T16
T16	Check: Component	
	• Check the following component for proper operation: Ignition Switch – Terminal G24-3	Test okay?
	Yes: E11	No: E12
T17	Check: Engine Start	
	• Charge or replace battery or • Connect loaded battery parallel to the battery in the vehicle • Try to start engine once more	Does the starter crank?
	Yes: T05	No: T15

Result Table (For RB413D)

Result	Cause Of Fault
E01	• Defective component: Last disconnected component
E02	Fault in wiring harness **NOTE:** **During fault searching in the wiring harness, the sections of the wiring harness can be separated at the assigned connectors. When the stall current changes to the permissible value after separating a section, the fault is located in the concerning section of the wiring harness.**
E03	• Battery discharged Cell shorted Corroded Contacts Bad ground connection
E04	• Defective component: Generator
E05	• Fault in wiring harness Wiring harness to generator terminal C07-1 or Wiring harness to generator terminal C08-1 or Bad ground connection
E06	• Circuit interruption between: Battery – Positive (+) terminal & Starting Motor – Wiring harness connector (wiring harness side) terminal C05-1 or • Defective component: Starting Motor
E07	• Mechanical engine problem
E08	• Repair/clean wiring harness and connectors to battery/starting motor
E09	• Mechanical engine problem or Defective component: Starting Motor **NOTE:** **The replacement of the components must be done in the listed order.** **The system must be checked for proper operation after every replacement.**
E10	• Defective component: Battery
E11	• Circuit interruption between: Ignition Switch – Wiring harness connector (wiring harness side) terminal G24-3 & Starting Motor – Wiring harness connector (wiring harness side) terminal C06-1
E12	• Defective component: Ignition Switch

C-47, System Status Information

Result	Cause Of Fault
E01	• This trouble code indicates an invalid operating condition. Operation mode with high load and high coolant temperature or Operation mode with high load and low fuel reserve • Inform the customer, that the system behaviour is normal respectively how to operate the system correctly. **NOTE:** **This trouble code is set when an engine protection function is activated.** **(overheating protection)**

C-48, Engine Coolant Temperature Circuit

Test Table (For RM413D)

Test	Work Order Description	Nominal Value
T01	Check: Short to Voltage of Signal Circuit	less than 0.3V
	• Ignition OFF • Disconnect wiring harness connector from: Combination meter and ECM • Ignition ON • Measure voltage between the following terminals: Combination meter – Wiring harness connector (wiring harness side) terminal G21-1 & Ground	
	Yes: T02	No: E01
T02	Check: Short to Ground of Signal Circuit	greater than 500 kOhm
	• Ignition OFF • Measure resistance between the following terminals: Combination meter – Wiring harness connector (wiring harness side) terminal G21-1 & Ground	
	Yes: T03	No: E02
T03	Check: Short to Interruption of Signal Circuit	less than 5 Ohm
	• Ignition OFF • Measure resistance between the following terminals: Combination meter – Wiring harness connector (wiring harness side) terminal G21-1 & ECM – Wiring harness connector (wiring harness side) terminal C66-45	
	Yes: E04	No: E03

Result Table (For RM413D)

Result	Cause of Fault
E01	• Short circuit to voltage between: Combination meter – Wiring harness connector (wiring harness side) terminal G21-1 & ECM – Wiring harness connector (wiring harness side) terminal C66-45
E02	• Short circuit to ground between: Combination meter – Wiring harness connector (wiring harness side) terminal G21-1 & ECM – Wiring harness connector (wiring harness side) terminal C66-45
E03	• Circuit interruption between: Combination meter – Wiring harness connector (wiring harness side) terminal G21-1 & ECM – Wiring harness connector (wiring harness side) terminal C66-45
E04	• Defective component: Combination meter or • Defective component: ECM **NOTE:** • **The replacement of the components must be done in the listed order. The system must be checked for proper operation after every replacement.** • **If ECM is replaced, register vehicle specification into ECM by performing procedure described in "ECM registration" in Section 6E3.**

Test Table (For RB413D)

Test	Work Order Description	Nominal Value
T01	Check: Short to Voltage of Signal Circuit	less than 0.3V
	• Ignition OFF • Disconnect wiring harness connector from: Combination meter and ECM • Ignition ON • Measure voltage between the following terminals: Combination meter – Wiring harness connector (wiring harness side) terminal G25-21 & Ground	
	Yes: T02	No: E01
T02	Check: Short to Ground of Signal Circuit	greater than 500 kOhm
	• Ignition OFF • Measure resistance between the following terminals: Combination meter – Wiring harness connector (wiring harness side) terminal G25-21 & Ground	
	Yes: T03	No: E02
T03	Check: Short to Interruption of Signal Circuit	less than 5 Ohm
	• Ignition OFF • Measure resistance between the following terminals: Combination meter – Wiring harness connector (wiring harness side) terminal G25-21 & ECM – Wiring harness connector (wiring harness side) terminal D26-45	
	Yes: E04	No: E03

Result Table (For RB413D)

Result	Cause of Fault
E01	• Short circuit to voltage between: Combination meter – Wiring harness connector (wiring harness side) terminal G25-21 & ECM – Wiring harness connector (wiring harness side) terminal D26-45
E02	• Short circuit to ground between: Combination meter – Wiring harness connector (wiring harness side) terminal G25-21 & ECM – Wiring harness connector (wiring harness side) terminal D26-45
E03	• Circuit interruption between: Combination meter – Wiring harness connector (wiring harness side) terminal G25-21 & ECM – Wiring harness connector (wiring harness side) terminal D26-45
E04	• Defective component: Combination meter or • Defective component: ECM **NOTE:** • **The replacement of the components must be done in the listed order. The system must be checked for proper operation after every replacement.** • **If ECM is replaced, register vehicle specification into ECM by performing procedure described in "ECM registration" in Section 6E3.**

C-49, Engine Speed Input Signal Circuit

Test Table (For RM413D)

Test	Work Order Description	Nominal Value
T01	Check: Short to Voltage/Ground/Interruption of Signal Circuit	
	• Ignition OFF • Disconnect wiring harness connector from: EPS control module (Wiring Harness Connector G13) • Ignition ON • Engine running at idle speed Scan Tool display Data List Parameter Engine Speed	Is engine speed displayed on scan tool?
	Yes: E01	No: T02
T02	Check: Short to Voltage/Ground/Interruption of Signal Circuit	
	• Ignition OFF • Disconnect wiring harness connector from: Combination meter • Ignition ON • Engine running at idle speed • Connect revolution indicator to: Combination meter – Wiring Harness Connector (wiring harness side) terminal G21-6 & Ground **NOTE:** **Revolution meter setting:** **4 cylinder, 4 stroke**	Is engine speed displayed on revolution meter?
	Yes: E02	No: T03
T03	Check: Short to Voltage of Signal Circuit	
	• Ignition OFF • Disconnect wiring harness connector from: ECM • Ignition ON • Measure voltage between the following terminals: Combination meter – Wiring Harness Connector (wiring harness side) terminal G21-6 & Ground	less than 0.3V
	Yes: T04	No: E05
T04	Check: Short to Ground of Signal Circuit	
	• Ignition OFF • Measure resistance between the following terminals: Combination meter – Wiring harness connector (wiring harness side) terminal G21-6 & Ground	greater than 500 kOhm
	Yes: E03	No: E04

Result Table (For RM413D)

Result	Cause of Fault
E01	• Defective component: EPS control module
E02	• Defective component: Combination meter
E03	• Circuit interruption between: Combination meter – Wiring harness connector (wiring harness side) terminal G21-16 & ECM – Wiring harness connector (wiring harness side) terminal E27-89 or Defective component: ECM **NOTE:** **If ECM is replaced, register vehicle specification into ECM by performing procedure described in "ECM registration" in Section 6E3.**
E04	• Short circuit to ground between: Combination meter – Wiring harness connector (wiring harness side) terminal G21-16 & ECM – Wiring harness connector (wiring harness side) terminal E27-89 & Wiring harness connector terminal of all components (wiring harness side), which were disconnected from the wiring harness during this trouble shooting session
E05	• Short circuit to voltage between: Combination meter – Wiring harness connector (wiring harness side) terminal G21-16 & ECM – Wiring harness connector (wiring harness side) terminal E27-89 & Wiring harness connector terminal of all components (wiring harness side), which were disconnected from the wiring harness during this trouble shooting session

Test Table (For RB413D)

Test	Work Order Description	Nominal Value
T01	Check: Short to Voltage/Ground/Interruption of Signal Circuit	
	• Ignition OFF • Disconnect wiring harness connector from: PTC control module (Wiring Harness Connector G92) • Ignition ON • Engine running at idle speed Scan Tool display Data List Parameter Engine Speed	Is engine speed displayed on scan tool?
	Yes: E01	No: T02
T02	Check: Short to Voltage/Ground/Interruption of Signal Circuit	
	• Ignition OFF • Disconnect wiring harness connector from: Combination meter • Ignition ON • Engine running at idle speed • Connect revolution meter to: Combination meter – Wiring Harness Connector (wiring harness side) terminal G25-18 & Ground **NOTE:** **Revolution meter setting:** **4 cylinder, 4 stroke**	Is engine speed displayed on revolution meter?
	Yes: E02	No: T03
T03	Check: Short to Voltage of Signal Circuit	
	• Ignition OFF • Disconnect wiring harness connector from: ECM • Ignition ON • Measure voltage between the following terminals: Combination meter – Wiring Harness Connector (wiring harness side) terminal G25-18 & Ground	less than 0.3V
	Yes: T04	No: E05
T04	Check: Short to Ground of Signal Circuit	
	• Ignition OFF • Measure resistance between the following terminals: Combination meter – Wiring harness connector (wiring harness side) terminal G25-18 & Ground	greater than 500 kOhm
	Yes: E03	No: E04

Result Table (For RB413D)

Result	Cause of Fault
E01	• Defective component: PTC control module
E02	• Defective component: Combination meter
E03	• Circuit interruption between: Combination meter – Wiring harness connector (wiring harness side) terminal G25-18 & ECM – Wiring harness connector (wiring harness side) terminal G88-29 or • Defective component: ECM **NOTE:** **If ECM is replaced, register vehicle specification into ECM by performing procedure described in "ECM registration" in Section 6E3.**
E04	• Short circuit to ground between: Combination meter – Wiring harness connector (wiring harness side) terminal G25-18 & ECM - Wiring harness connector (wiring harness side) terminal G88-29 & Wiring harness connector terminal of all components (wiring harness side), which were disconnected from the wiring harness during this trouble shooting session
E05	• Short circuit to voltage between: Combination meter – Wiring harness connector (wiring harness side) terminal G25-18 & ECM - Wiring harness connector (wiring harness side) terminal G88-29 & Wiring harness connector terminal of all components (wiring harness side), which were disconnected from the wiring harness during this trouble shooting session

Special Tool

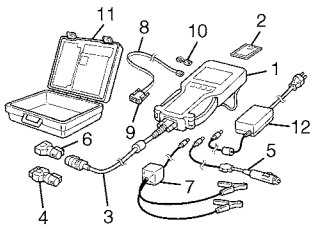

Tech 2 kit (SUZUKI scan tool) (See NOTE)

NOTE:

This kit includes the following items.
1. Tech 2, 2. PCMCIA card, 3. DLC cable, 4. SAE 16/19 adapter, 5. Cigarette cable, 6. DLC loopback adapter, 7. Battery power cable, 8. RS232 cable, 9. RS232 adapter, 10. RS232 loopback connector, 11. Storage case, 12. Power supply

SECTION 6A3

ENGINE MECHANICAL (Z13DT ENGINE)

WARNING:

For vehicles equipped with a Supplemental Restraint (Air Bag) System:

- **Service on and around the air bag system components or wiring must be performed only by an authorized SUZUKI dealer. Refer to "Air Bag System Components and Wiring Location View" under "General Description" in air bag system section in order to confirm whether you are performing service on or near the air bag system components or wiring. Please observe all WARNINGs and "Service Precautions" under "On-Vehicle Service" in air bag system section before performing service on or around the air bag system components or wiring. Failure to follow WARNINGs could result in unintentional activation of the system or could render the system inoperative. Either of these two conditions may result in severe injury.**
- **Technical service work must be started at least 90 seconds after the ignition switch is turned to the "LOCK" position and the negative cable is disconnected from the battery. Otherwise, the system may be activated by reserve energy in the Sensing and Diagnostic Module (SDM).**

CAUTION:

Be sure to read "Precautions" in Section 6E3 before disconnecting fuel line or removing fuel system part(s). Failure to follow "Precautions" could result unneeded fuel system repairs.

CONTENTS

On-Vehicle Service 6A3-2
- Air Cleaner Components 6A3-2
- Air Cleaner Filter Removal and Installation 6A3-3
- Air Cleaner Filter Inspection and Cleaning 6A3-3
- Air Cleaner Assembly Removal and Installation 6A3-3
- Inter Cooler Components 6A3-4
- Inter Cooler Removal and Installation 6A3-5
- Turbocharger Components 6A3-6
- Turbocharger Removal and Installation 6A3-7
- Turbocharger Inspection 6A3-11
- Intake Manifold Components 6A3-12
- Intake Manifold Removal and Installation 6A3-12
- Exhaust Manifold Components 6A3-14
- Exhaust Manifold Removal and Installation 6A3-14
- Vacuum Pump Removal and Installation 6A3-16
- Oil Pressure Switch Removal and Installation 6A3-18
- Oil Cooler Components 6A3-19
- Oil Cooler Removal and Installation 6A3-19
- Oil Pan Components 6A3-22
- Oil Pan Removal and Installation 6A3-22

Unit Repair Overhaul 6A3-25
- Engine Assembly Removal and Installation 6A3-25

Special Tool 6A3-29

Required Service Material 6A3-29

Tightening Torque Specifications 6A3-30

On-Vehicle Service

Air Cleaner Components

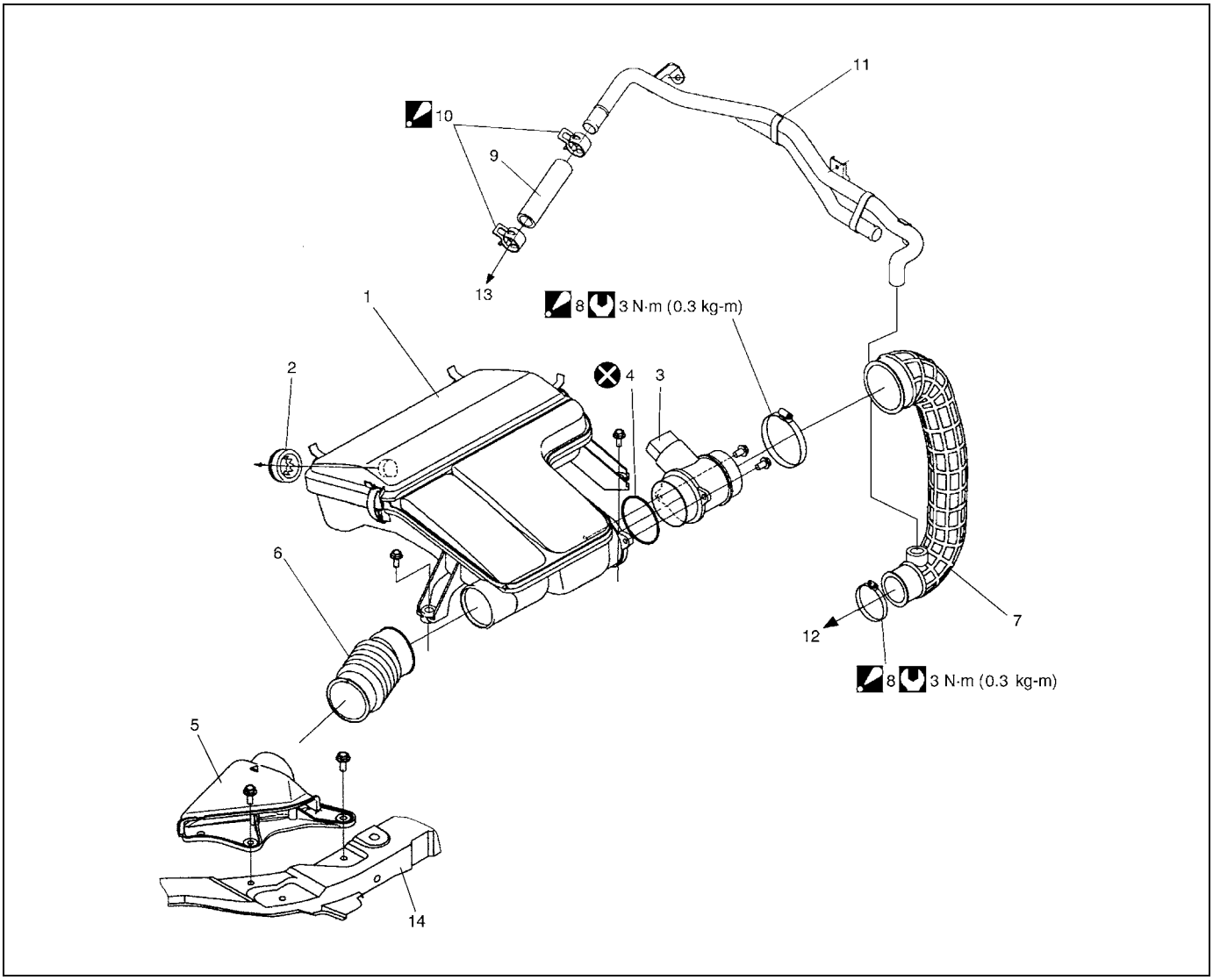

1. Air cleaner assembly	7. Air cleaner outlet hose	13. To engine
2. Air cleaner grommet	8. Hose clamp Be sure to position clamp screw in specified place as shown in figure.	14. Upper member
3. MAF sensor assembly	9. Breather hose	Tightening torque
4. MAF sensor O-ring	10. Breather hose clip Be sure to position clip in specified direction as shown in figure.	Do not reuse.
5. Air cleaner suction pipe	11. Breather pipe	
6. Air suction hose	12. To turbocharger	

Air Cleaner Filter Removal and Installation

Removal

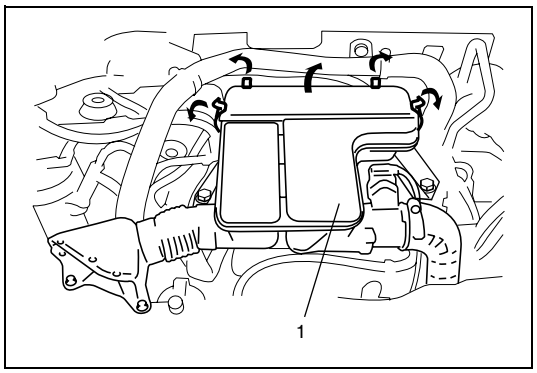

1) Unhook air cleaner assembly (1) clamps.
2) Open air cleaner assembly.
3) Remove air cleaner filter from air cleaner assembly.

Installation

Reverse removal procedure for installation.

Air Cleaner Filter Inspection and Cleaning

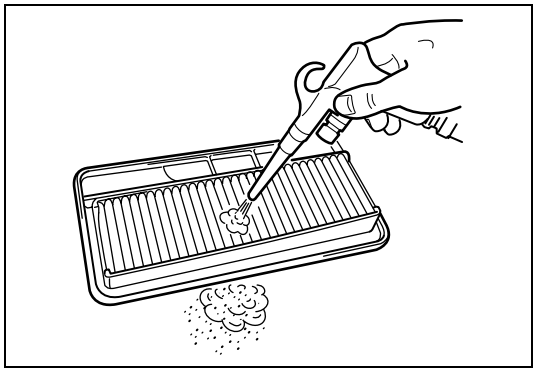

- Check air cleaner filter for dirt. Replace excessively dirty filter.
- Blow off dust by compressed air from air outlet side of filter.

Air Cleaner Assembly Removal and Installation

Removal

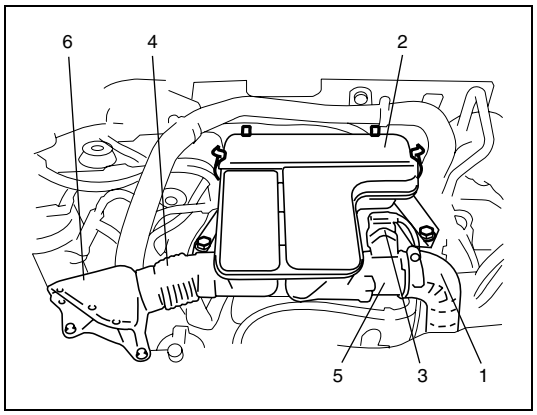

1) Disconnect air cleaner outlet hose (1) from air cleaner assembly (2).
2) Disconnect MAF sensor connector (3) from MAF sensor assembly (5).
3) Remove air suction hose (4) with air cleaner suction pipe (6) from air cleaner assembly (2).
4) Remove air cleaner assembly (2).

Installation

Reverse removal procedure for installation noting the following.

- Clamp each hose securely.
- Tighten air cleaner outlet hose clamp to specified torque referring to “Air Cleaner Components” in this section.

Inter Cooler Components

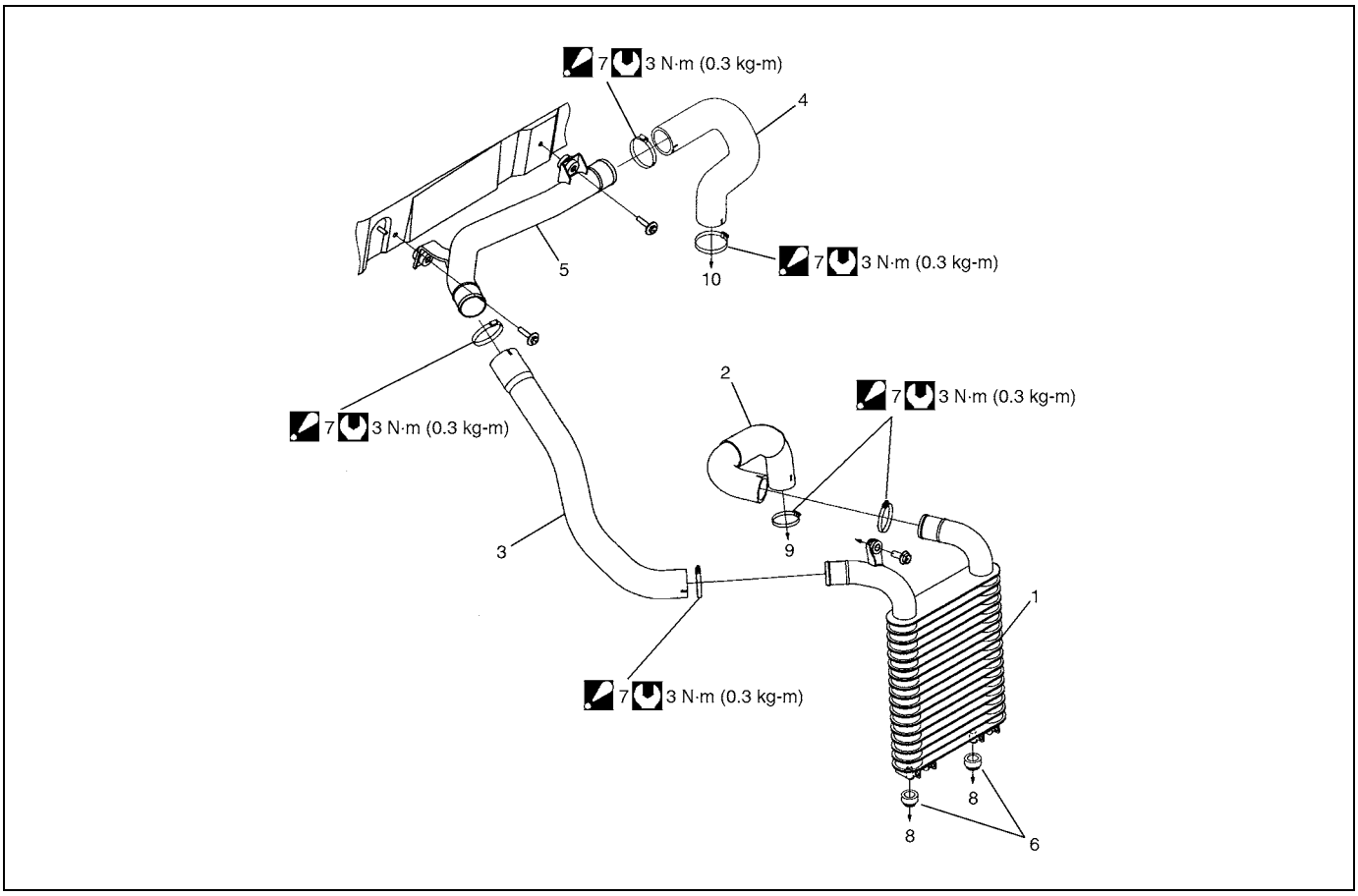

1. Inter cooler	5. Inter cooler outlet pipe	9. To turbocharger
2. Inter cooler inlet hose	6. Inter cooler mount	10. To air intake joint
3. Inter cooler outlet No.1 hose	7. Hose clamp Be sure to position clamp screw in specified place as shown in figure.	Tightening torque
4. Inter cooler outlet No.2 hose	8. To lower member	

Inter Cooler Removal and Installation

Removal

1) Remove front bumper referring to “Front Bumper and Rear Bumper Removal and Installation” for RM413D or “Front Bumper and Rear Bumper” for RB413D in Section 9.

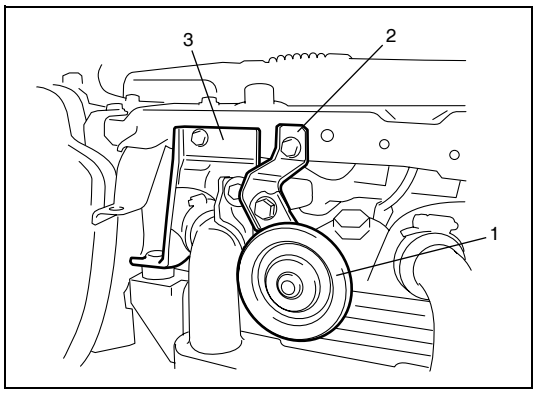

2) Remove horn (1) with its bracket (2) and radiator right side bracket (3).

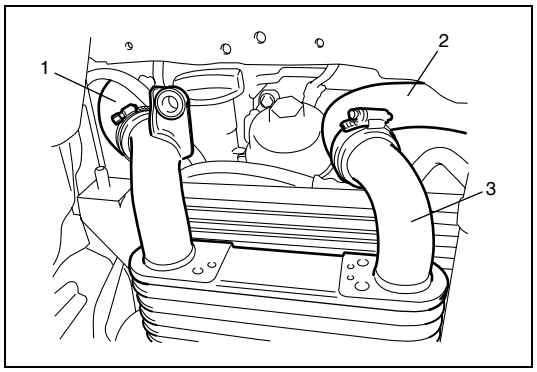

3) Disconnect inter cooler outlet No.1 hose (1) and inlet hose (2) from inter cooler (3).
4) Remove inter cooler from vehicle.

Installation

Reverse removal procedure for installation noting the following.

- Tighten hose clamps (1) to specified torque.

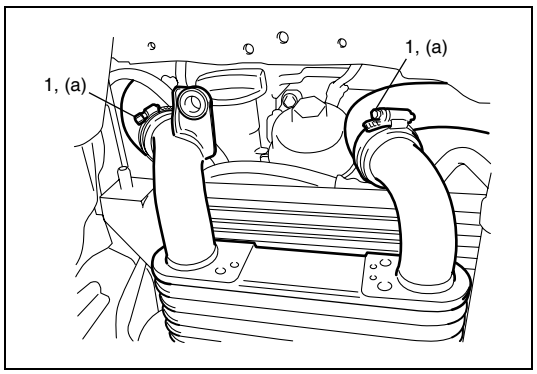

Tightening torque
Inter cooler hose clamp (a): 3 N·m (0.3 kg-m, 2.5 lb-ft)

- Install front bumper referring to “Front Bumper and Rear Bumper Removal and Installation” for RM413D or “Front Bumper and Rear Bumper” for RB413D in Section 9.

Turbocharger Components

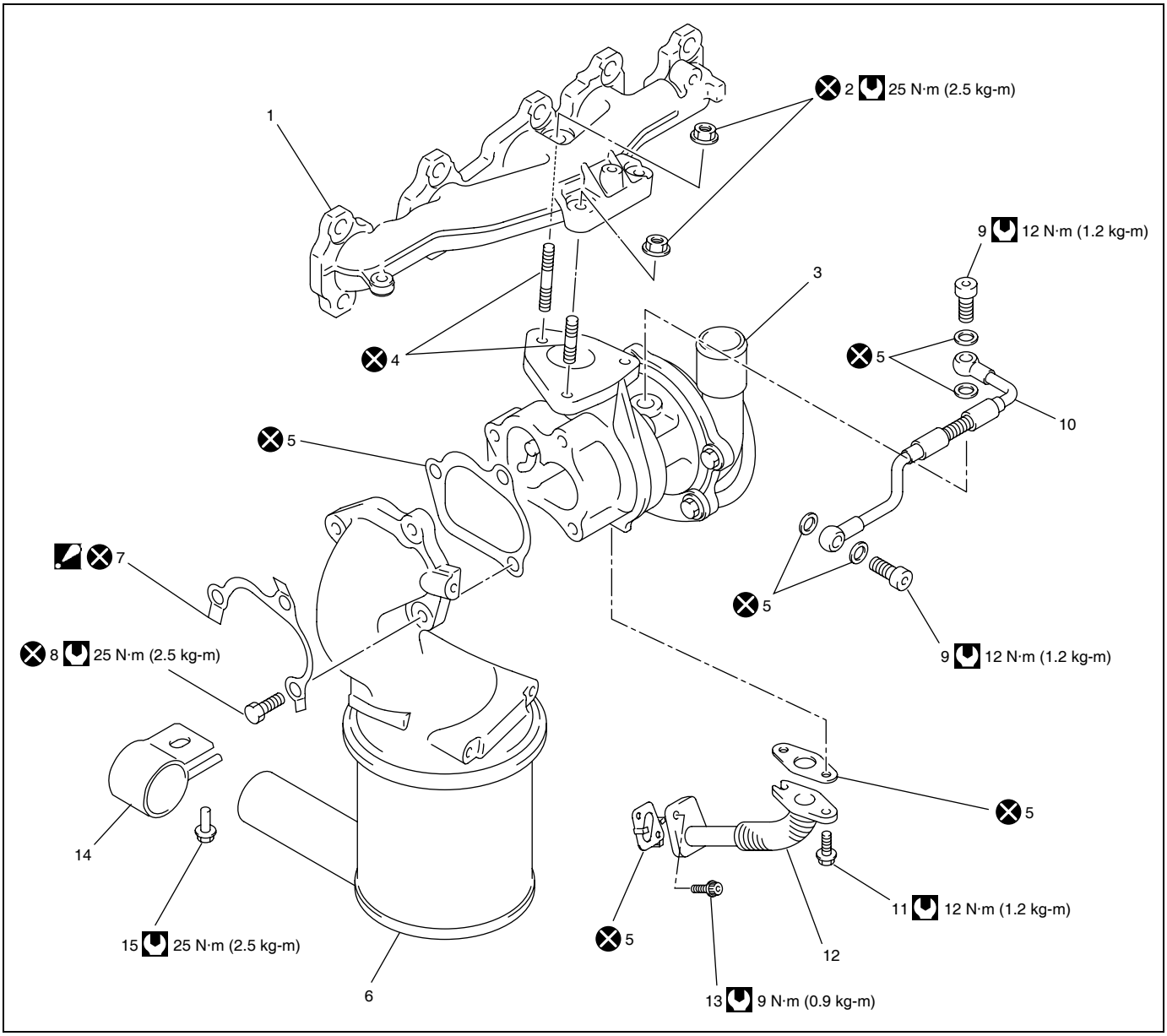

1. Exhaust manifold	7. Lock plate : Bend lock part of lock plate to prevent catalytic converter bolt from loosening.	13. Oil return pipe bolt
2. Turbocharger nut	8. Catalytic converter bolt	14. Catalytic converter mount
3. Turbocharger	9. Union bolt	15. Catalytic converter mounting bolt
4. Stud bolt	10. Turbocharger lubrication pipe	Tightening torque
5. Gasket	11. Oil return pipe bolt	Do not reuse.
6. Catalytic converter	12. Oil return pipe	

Turbocharger Removal and Installation

Removal

WARNING:
To avoid danger of being burned, do not service exhaust system while it is still hot. Service should be performed after system cools down.

1) Disconnect negative (–) cable at battery.
2) Remove air cleaner assembly with MAF sensor assembly referring to “Air Cleaner Assembly Removal and Installation” in this section.

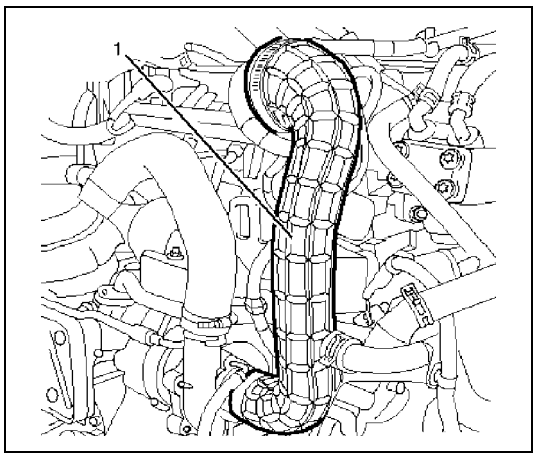

3) Remove air cleaner outlet hose (1) from turbocharger.
4) Remove inter cooler inlet hose referring to “Inter Cooler Removal and Installation” in this section.
5) Remove exhaust manifold side engine hanger referring to “Exhaust Manifold Components” in this section.

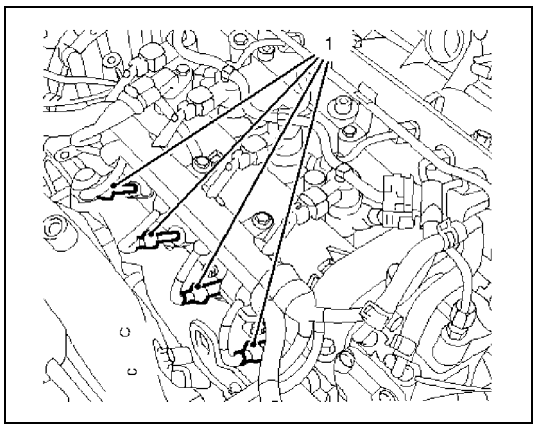

6) Disconnect glow plug connectors (1).

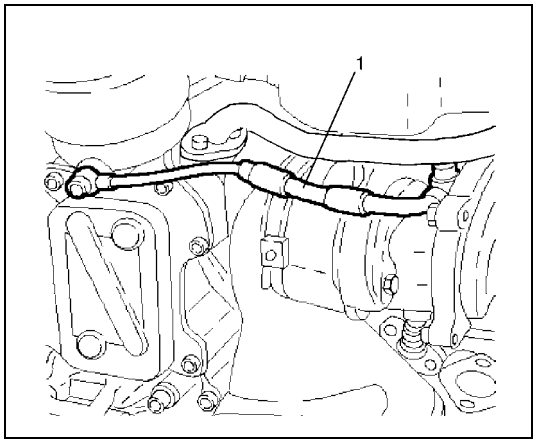

7) Remove lubrication pipe (1).

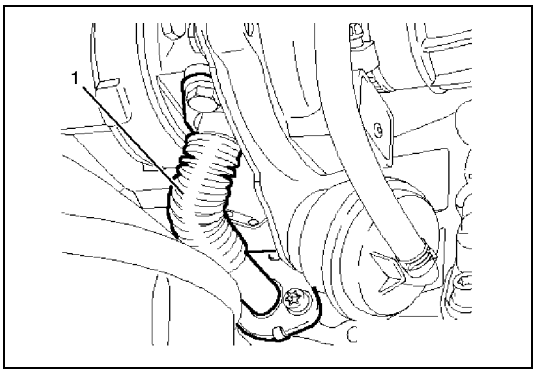

8) Disconnect oil return pipe (1) from cylinder block.

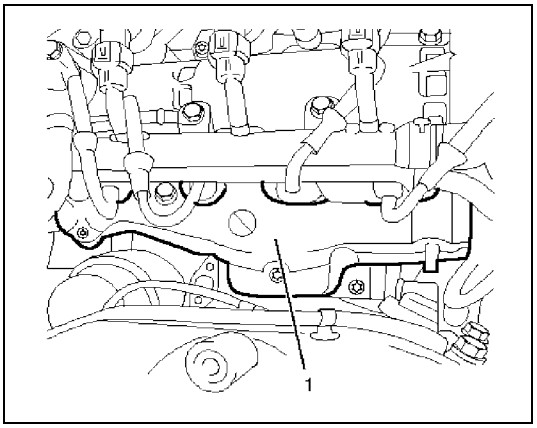

9) Remove exhaust manifold cover (1) from exhaust manifold.
10) Remove exhaust pipe No.1 referring to “Exhaust Pipe Removal and Installation” in Section 6K3.
11) Disconnect stabilizer from cross member referring to “Stabilizer Bar and Bushings Removal and Installation” for RM413D or “Stabilizer Bar and Bushings” for RB413D in Section 3D.

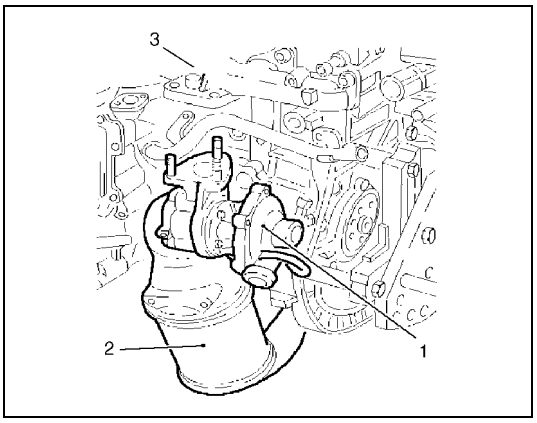

12) Remove turbocharger (1) with catalytic converter (2).

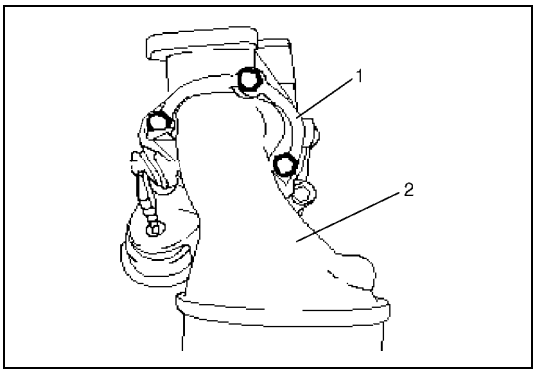

13) Remove catalytic converter (2) from turbocharger after unbending lock plate (1) and loosening bolts.

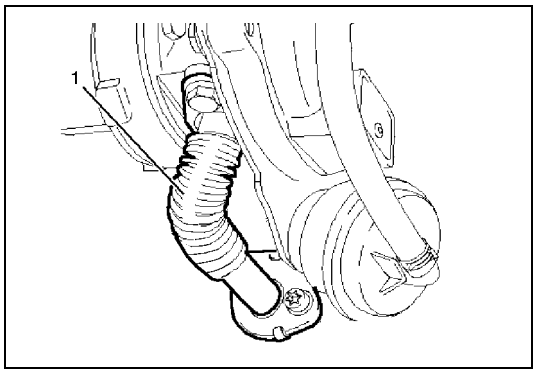

14) Remove oil return pipe (1) from turbocharger.

Installation

NOTE:

Clean mating surfaces of turbocharger, catalytic converter and exhaust manifold.

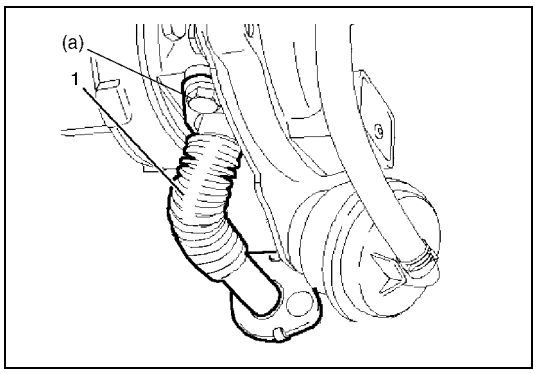

1) Install oil return pipe (1) with new gasket to turbocharger.

Tightening torque
Oil return pipe bolt (a): 12 N·m (1.2 kg-m, 9.0 lb-ft)

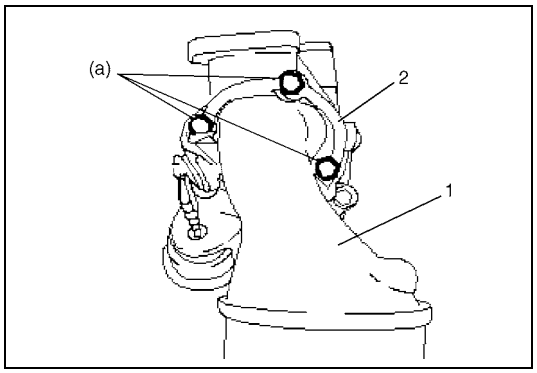

2) Install new gasket, catalytic converter (1) and new lock plate (2) to turbocharger.

Tightening torque
Catalytic converter bolt (a): 25 N·m (2.5 kg-m, 18.0 lb-ft)

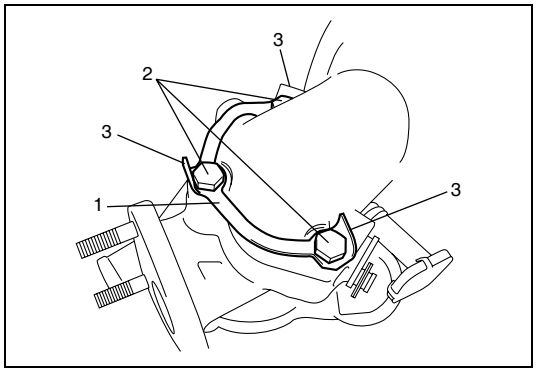

3) Bend claws (3) of lock plate (1) to prevent catalytic converter bolt (2) from loosening.

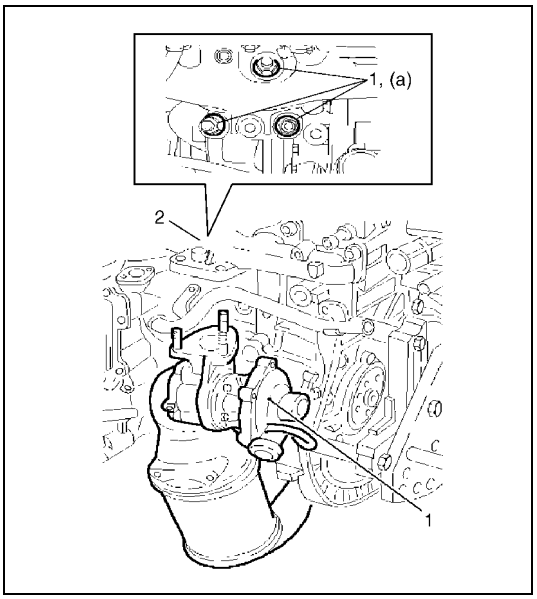

4) Install turbocharger with catalytic converter (1) using new turbocharger nuts (1).

Tightening torque
Turbocharger nut
(a): 25 N·m (2.5 kg-m, 18.0 lb-ft)
Catalytic converter mounting bolt
: 25 N·m (2.5 kg-m, 18.0 lb-ft)

5) Connect stabilizer to cross member referring to “Stabilizer Bar and Bushings Removal and Installation” for RM413D or “Stabilizer Bar and Bushings” for RB413D in Section 3D.

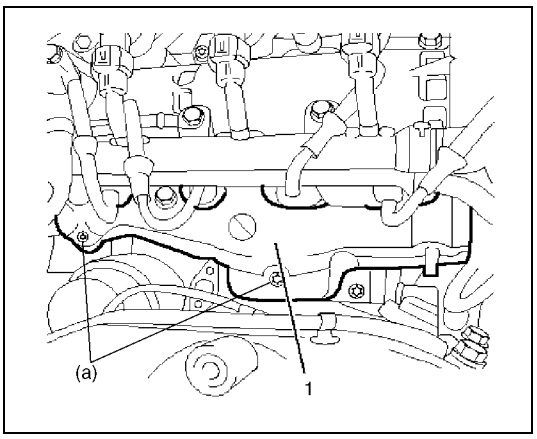

6) Install exhaust manifold cover (1).

Tightening torque
Exhaust manifold cover nut (a): 9 N·m (0.9 kg-m, 7.0 lb-ft)

7) Install exhaust pipe No.1 referring to “Exhaust Pipe Removal and Installation” in Section 6K3.

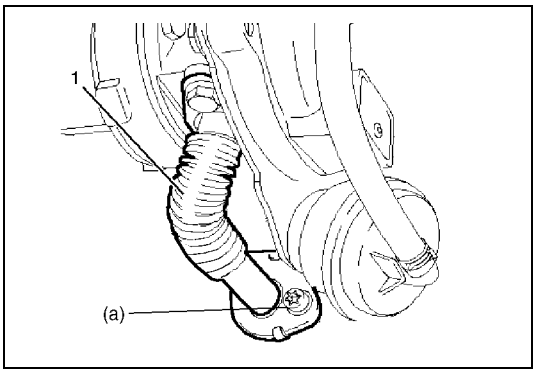

8) Connect return pipe (1) to cylinder block with new gasket.

Tightening torque
Oil return pipe bolt (a): 9 N·m (0.9 kg-m, 7.0 lb-ft)

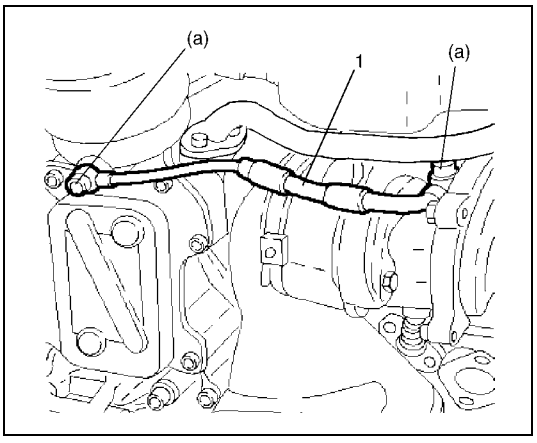

9) Install lubrication pipe (1) with new gasket.

Tightening torque
Lubrication pipe union bolt (a): 12 N·m (1.2 kg-m, 9.0 lb-ft)

10) Install exhaust manifold side engine hanger of referring to “Exhaust Manifold Components” in this section.

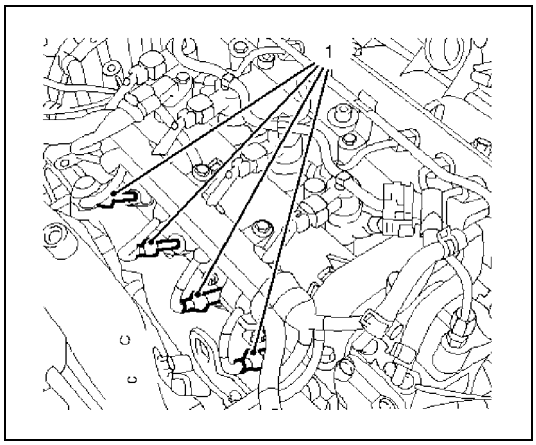

11) Connect glow plug connectors (1).
12) Install inter cooler inlet hose referring to “Inter Cooler Removal and Installation” in this section.

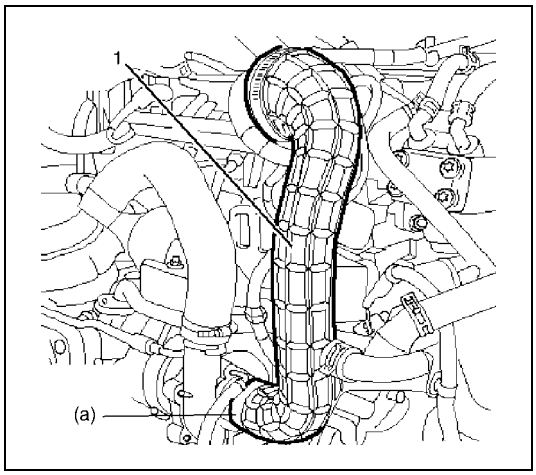

13) Install air cleaner outlet hose (1) to turbocharger and then tighten its clamp to specified torque.

Tightening torque
Air cleaner outlet hose clamp
(a): 3.1 N·m (0.31 kg-m, 2.5 lb-ft)

14) Install air cleaner assembly with MAF sensor assembly, referring to “Air Cleaner Assembly Removal and Installation” in this section.
15) Connect negative (–) cable at battery.
16) Check to make sure that there is no oil leakage and exhaust gas leakage at each connection.

Turbocharger Inspection

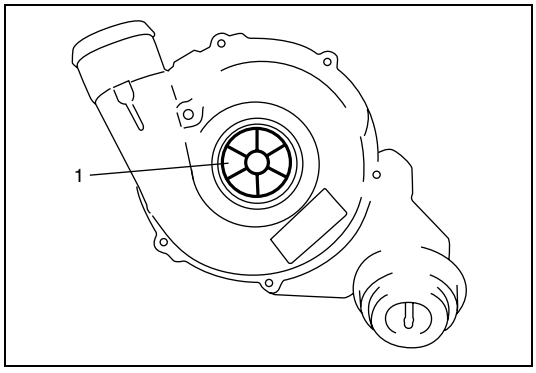

Rotate turbine shaft (1) by hand and verify that it turns smoothly without any abnormal noise and excessive runout.
If a malfunction is found, replace the turbocharger.

Intake Manifold Components

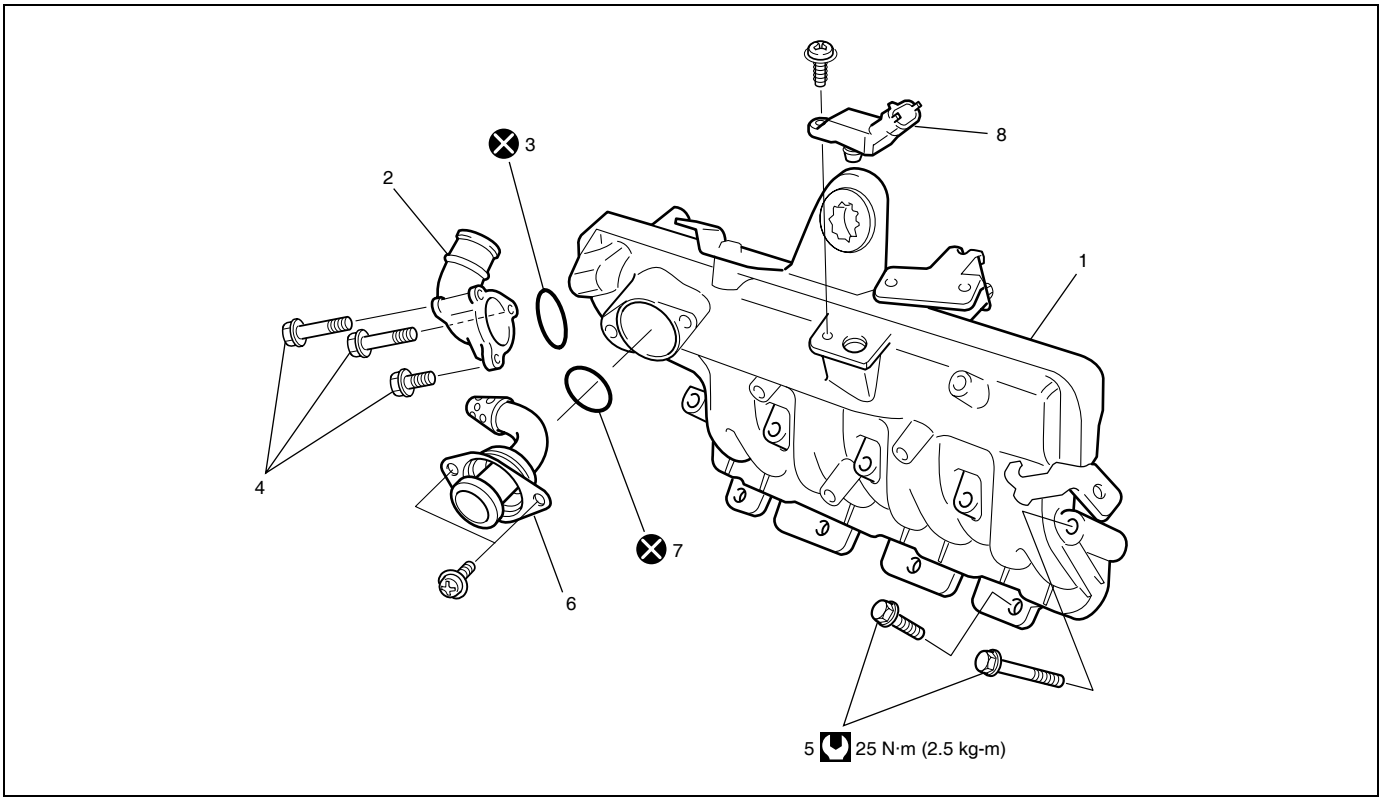

1. Intake manifold	4. Air intake bolt	7. EGR pipe gasket	Tightening torque
2. Air intake joint	5. Intake manifold bolt	8. MAP sensor	Do not reuse.
3. Air intake joint gasket	6. EGR pipe		

Intake Manifold Removal and Installation

Removal

1) Disconnect negative (–) cable at battery.
2) Remove air cleaner assembly with MAF sensor assembly referring to “Air Cleaner Assembly Removal and Installation” in this section.
3) Remove inter cooler outlet No.2 hose referring to “Inter Cooler Components” in this section.
4) Remove EGR valve assembly referring to “EGR valve assembly removal and installation” in Section 6E3.

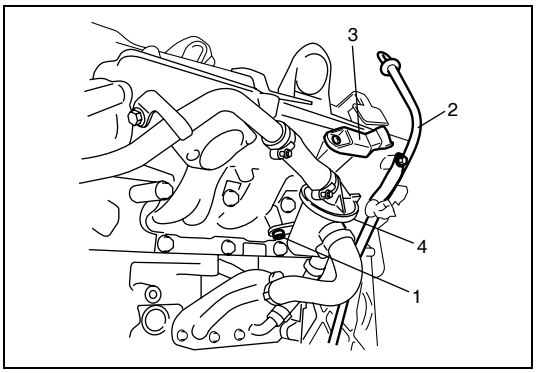

5) Remove oil separator bolt (1) from intake manifold.
6) Remove oil level gauge guide (2) with level gauge.
7) Disconnect connector from MAP sensor (3).

4. Oil separator

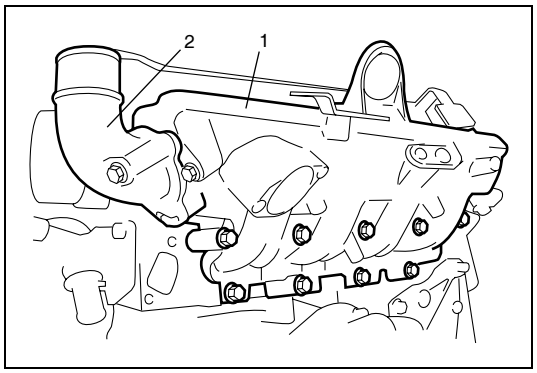

8) Remove intake manifold (1) and gasket from cylinder head.
9) Remove EGR pipe and air intake joint (2) from intake manifold.

Installation

Reverse removal procedure for installation noting the following.

- Clean mating surfaces of intake manifold and cylinder head.
- Use new gasket for intake manifold, air intake joint and EGR pipe.

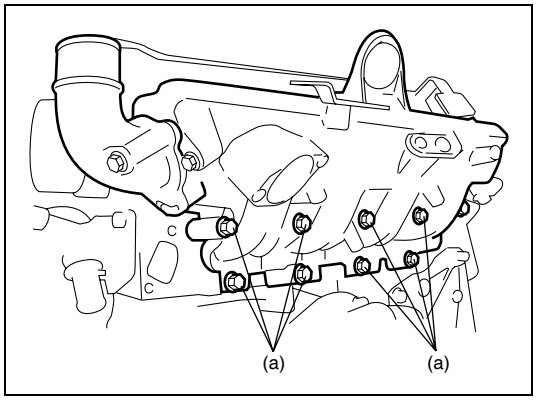

- Tighten intake manifold bolts to specified torque.

Tightening torque
Intake manifold bolt (a): 25 N·m (2.5 kg-m, 18.0 lb-ft)

- Install EGR valve assembly referring to “EGR valve assembly removal and installation” in Section 6E3.
- Connect negative (–) cable at battery.
- Check to ensure that all removed parts are back in place. Reinstall any necessary parts which have not been reinstalled.

Exhaust Manifold Components

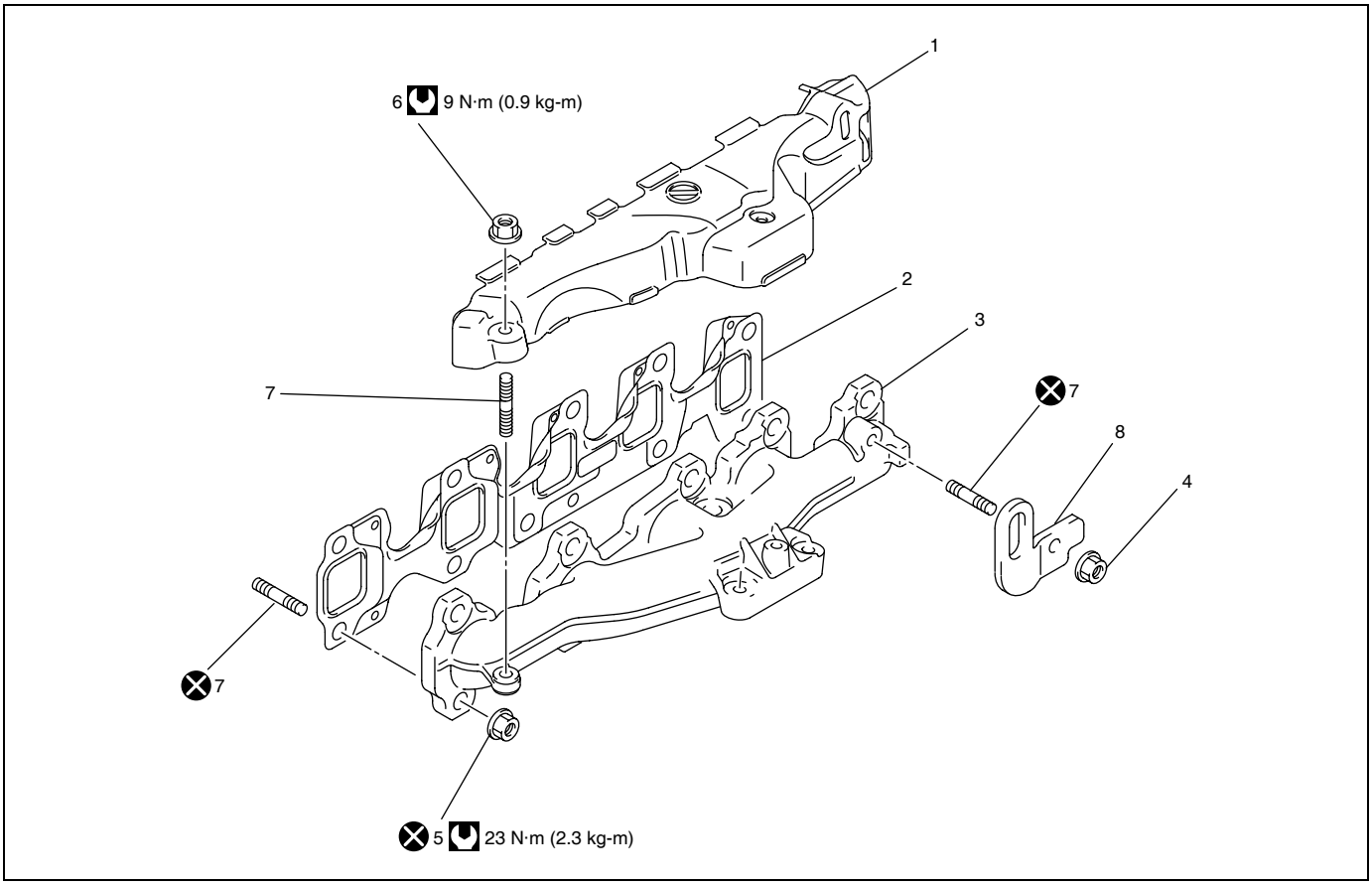

1. Exhaust manifold cover	4. Engine hanger nut	7. Stud bolt	Tightening torque
2. Exhaust manifold gasket	5. Exhaust manifold nut	8. Engine hanger	Do not reuse.
3. Exhaust manifold	6. Exhaust manifold cover nut		

Exhaust Manifold Removal and Installation

Removal

WARNING:
To avoid danger of being burned, do not service exhaust system while it is still hot. Service should be performed after system cools down.

1) Disconnect negative (–) cable at battery.
2) Drain engine coolant referring to “Cooling System Flush and Refill” in Section 6B3.
3) Remove air cleaner assembly with MAF sensor assembly referring to “Air Cleaner Assembly Removal and Installation” in this section.
4) Remove turbocharger referring to “Turbocharger Removal and Installation” in this section.

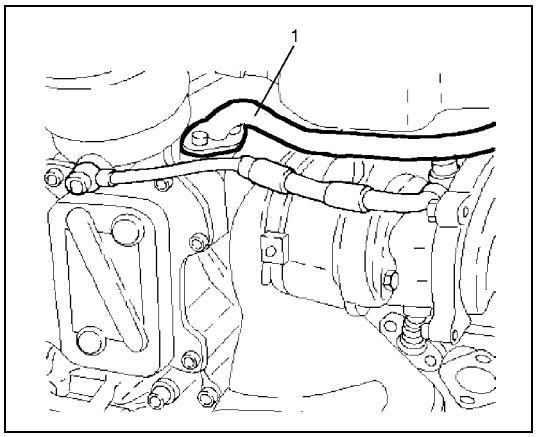

5) Remove coolant feed pipe (1).

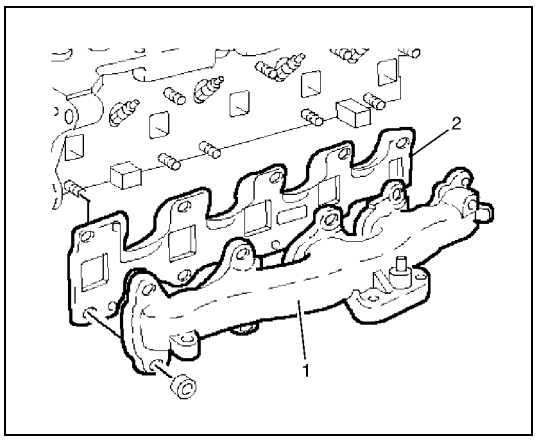

6) Remove exhaust manifold (1) and exhaust manifold gasket (2).

Installation

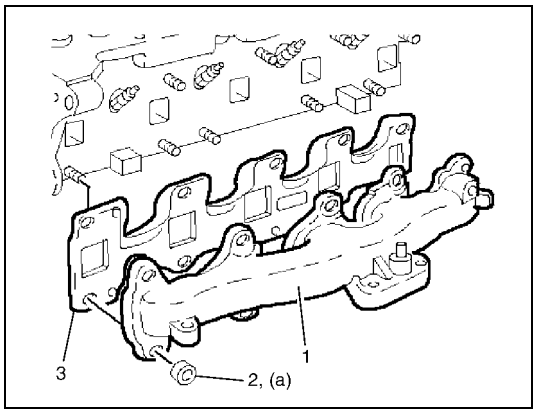

1) Install exhaust manifold (1) with new gasket (3) using new nut (2).

Tightening torque
Exhaust manifold nut (a): 23 N·m (2.3 kg-m, 17.0 lb-ft)

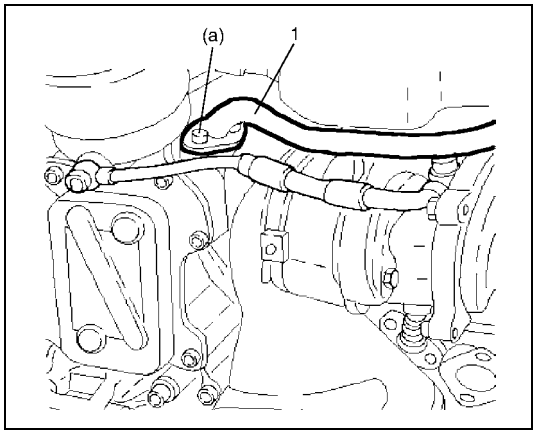

2) Install coolant feed pipe (1).

Tightening torque
Coolant feed pipe bolt (a): 9 N·m (0.9 kg-m, 7.0 lb-ft)

3) Install turbocharger referring to “Turbocharger Removal and Installation” in this section.
4) Install air cleaner assembly with MAF sensor assembly referring to “Air Cleaner Assembly Removal and Installation” in this section.
5) Refill cooling system referring to “Cooling System Flush and Refill” in Section 6B3.
6) Connect negative (–) cable at battery.
7) Check to make sure that there is no oil leakage, coolant leakage and exhaust gas leakage at each connection.

Vacuum Pump Removal and Installation

CAUTION:
Never disassemble vacuum pump.
Disassembly will spoil its original function.
If faulty condition is found, replace it with new one.

Removal

1) Remove air cleaner assembly with MAF sensor assembly referring to “Air Cleaner Assembly Removal and Installation” in this section.

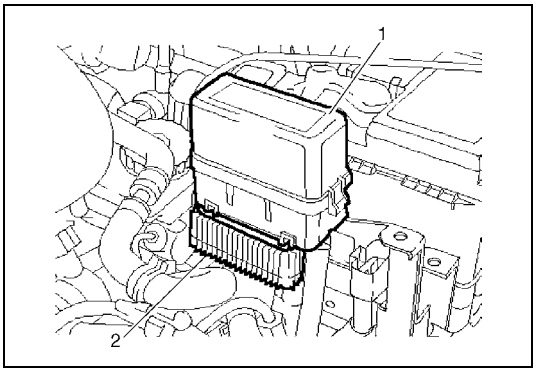

2) Remove relay holder (1) and preheating control unit (2).

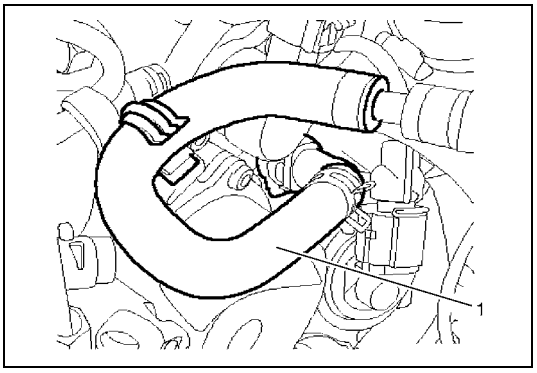

3) Disconnect vacuum hose (1) from vacuum pump.

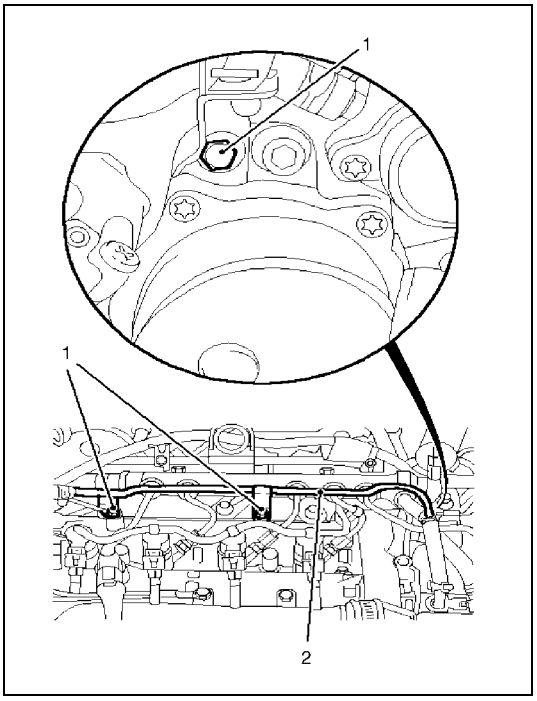

4) Remove fuel feed pipe bolt (1) from cylinder head cover and vacuum pump.

2. Fuel feed pipe

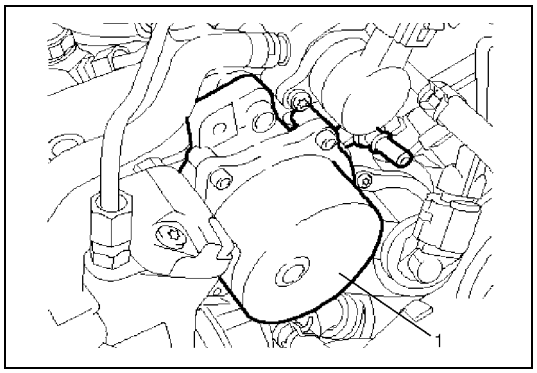

5) Remove vacuum pump (1) from cylinder head.

Installation

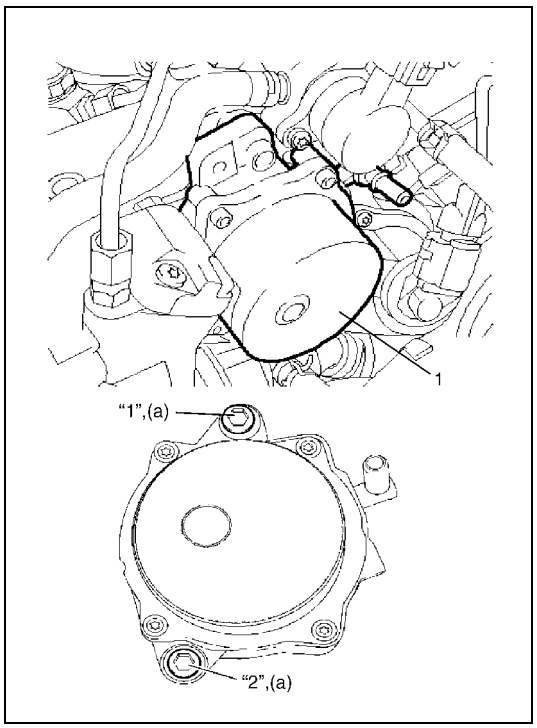

1) Install vacuum pump (1) to cylinder head.
   Tighten vacuum pump bolt gradually as follows.
   a) Tighten vacuum pump bolt to 5 N·m (0.5 kg-m, 4.0 lb-ft) according to numerical order in the figure.
   b) In the same manner as Step a), tighten them to 10 N·m (1.0 kg-m, 7.5 lb-ft).

Tightening torque
Vacuum pump bolt (a):
Tighten 5 N·m (0.5 kg-m, 4.0 lb-ft) and 10 N·m (1.0 kg-m, 7.5 lb-ft) by the specified procedure

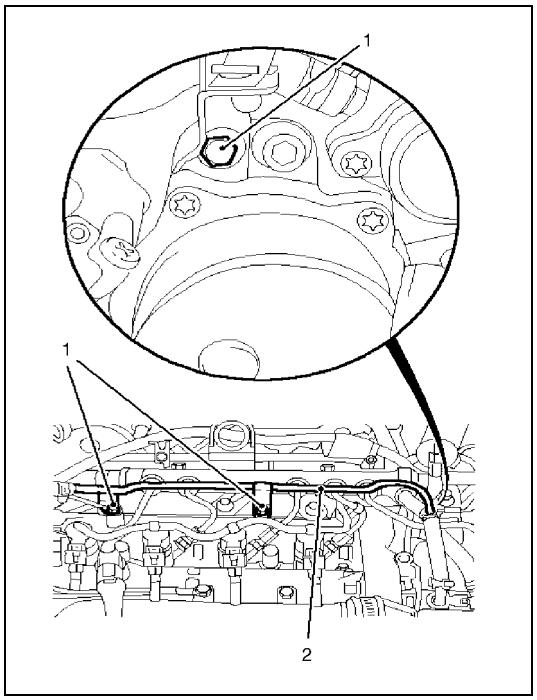

2) Install fuel feed pipe bolts to cylinder head cover and vacuum pump.

2. Fuel feed pipe

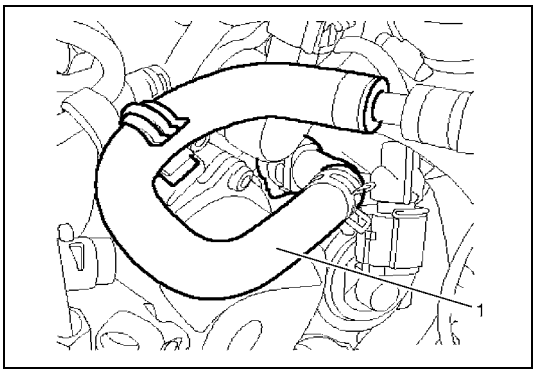

3) Connect vacuum hose (1) to vacuum pump.

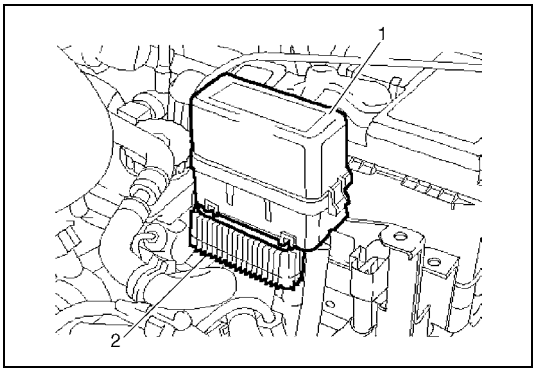

4) Install relay holder (1) and preheating control unit (2).
5) Install air cleaner assembly and MAF sensor assembly referring to “Air Cleaner Assembly Removal and Installation” in this section.

Oil Pressure Switch Removal and Installation

Removal

1) Remove air cleaner outlet hose.
2) Disconnect oil pressure switch connector.

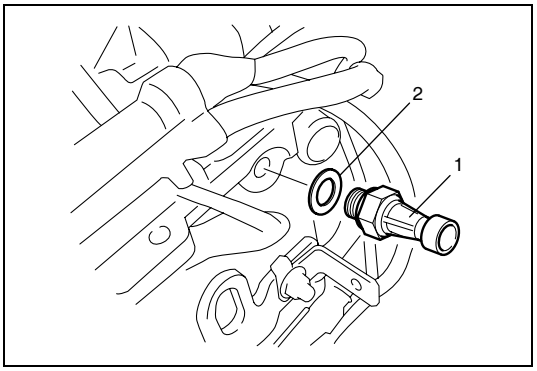

3) Remove oil pressure switch (1) and gasket (2) from cylinder head.

Installation

Reverse removal procedure for installation noting the following.

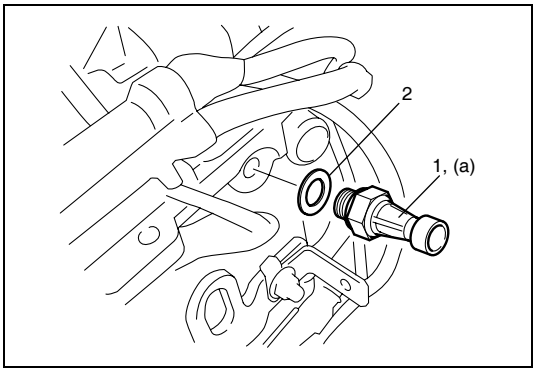

- Use a new gasket (2).
- Tighten oil pressure switch (1) to specified torque.

Tightening torque
Oil pressure switch (a): 32 N·m (3.2 kg-m, 23.5 lb-ft)

- Check to make sure that there is no engine oil leakage.

Oil Cooler Components

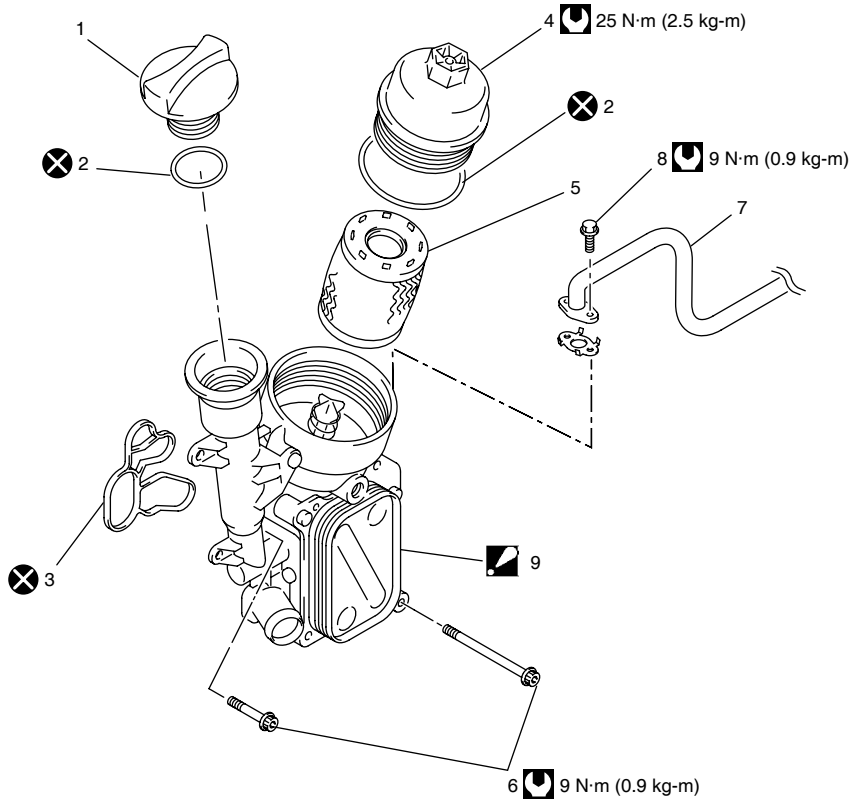

1. Filler cap	4. Oil filter housing cover	7. Coolant feed pipe	Tightening torque
2. O-ring	5. Oil filter	8. Coolant feed pipe bolt	Do not reuse.
3. Gasket	6. Oil cooler bolt	9. Oil cooler assembly : Never disassemble oil cooler assembly.	

Oil Cooler Removal and Installation

CAUTION:
Never disassemble oil cooler assembly.
Disassembly will spoil its original function.
If faulty condition is found, replace it with new one.

Removal

1) Disconnect negative (–) cable at battery.
2) Drain engine coolant referring to “Cooling System Flush and Refill” in Section 6B3.
3) Remove air cleaner assembly with MAF sensor assembly referring to “Air Cleaner Assembly Removal and Installation” in this section.

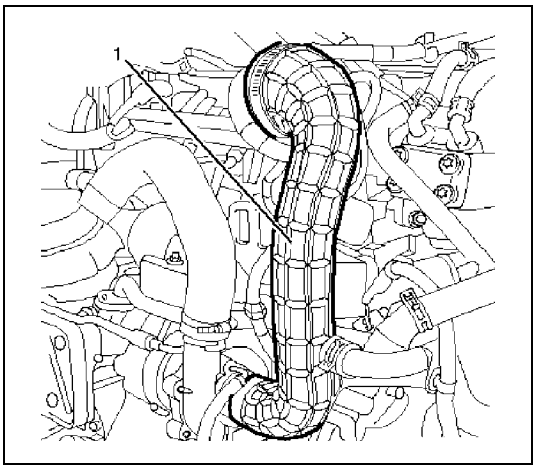

4) Remove air cleaner outlet hose (1).
5) Remove inter cooler inlet hose and outlet No.1 hose referring to “Inter Cooler Removal and Installation” in this section.
6) Remove lubrication pipe referring to “Turbocharger Removal and Installation” in this section.

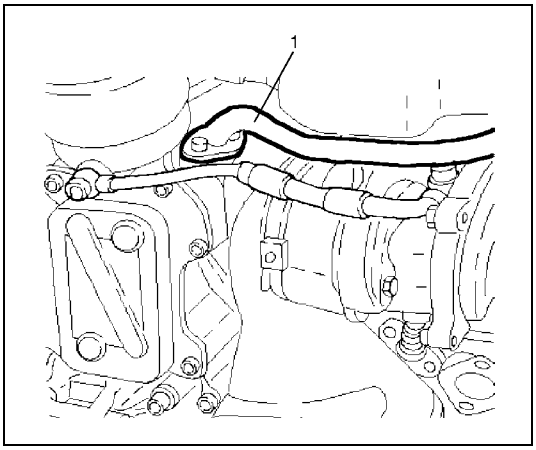

7) Remove coolant feed pipe (1) and radiator outlet hose.

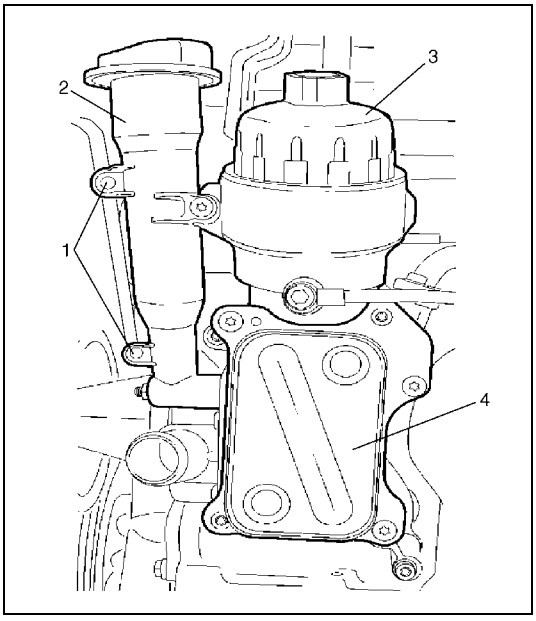

8) Disconnect wire harness clamps (1) from filler port (2).
9) Remove oil filter housing cover (3) and oil filter.
10) Remove oil cooler assembly (4).

Installation

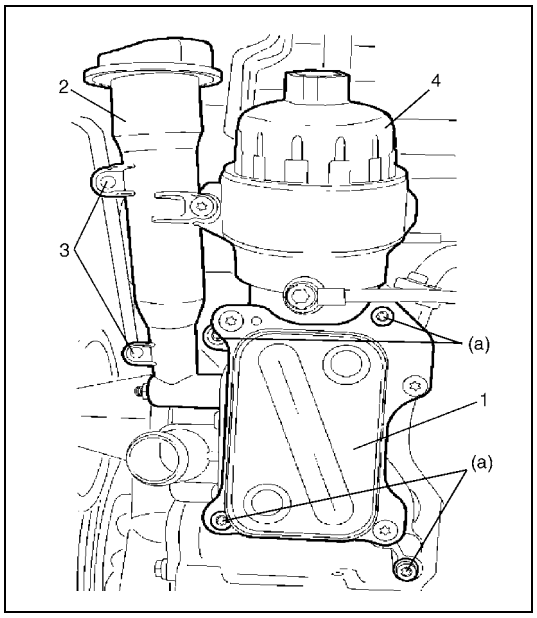

1) Install oil cooler assembly (1) using new gasket.

Tightening torque
Oil cooler bolt (a): 9 N·m (0.9 kg-m,7.0 lb-ft)

2) Connect wire harness clamp (3) to filler port (2).
3) Install oil filter, oil filter housing cover (4) with new O-ring referring to “Engine Oil and Filter Replacement” in Section 0B.

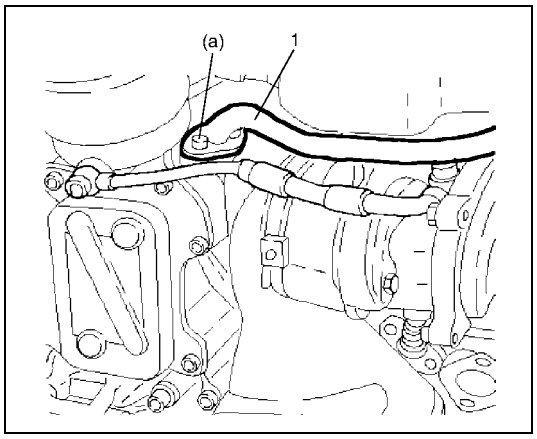

4) Install coolant feed pipe (1) and lower hose.

Tightening torque
Coolant feed pipe bolt (a): 9 N·m (0.9 kg-m, 7.0 lb-ft)

5) Install lubrication pipe referring to “Turbocharger Removal and Installation” in this section.
6) Install inter cooler inlet hose and outlet No.1 hose referring to “Inter Cooler Removal and Installation” in this section.

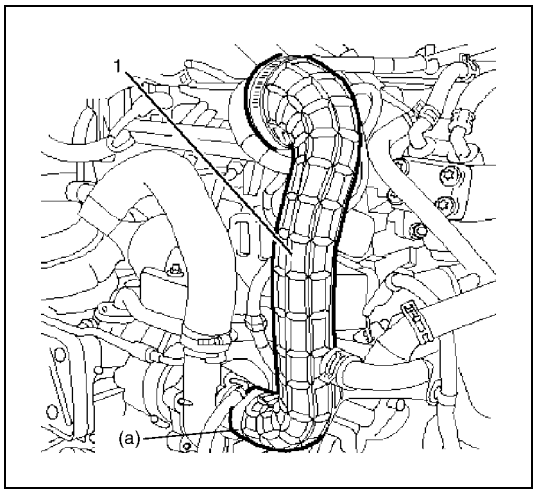

7) Install air cleaner outlet hose (1) to turbocharger.

Tightening torque
Air cleaner outlet hose clamp
(a): 3.1 N·m (0.31 kg-m, 2.5 lb-ft)

8) Install air cleaner assembly with MAF sensor assembly referring to “Air Cleaner Assembly Removal and Installation” in this section.
9) Refill cooling system referring to “Cooling System Flush and Refill” in Section 6B3.
10) Connect negative (–) cable at battery.
11) Check to make sure that there is no oil leakage and coolant leakage at each connection.

Oil Pan Components

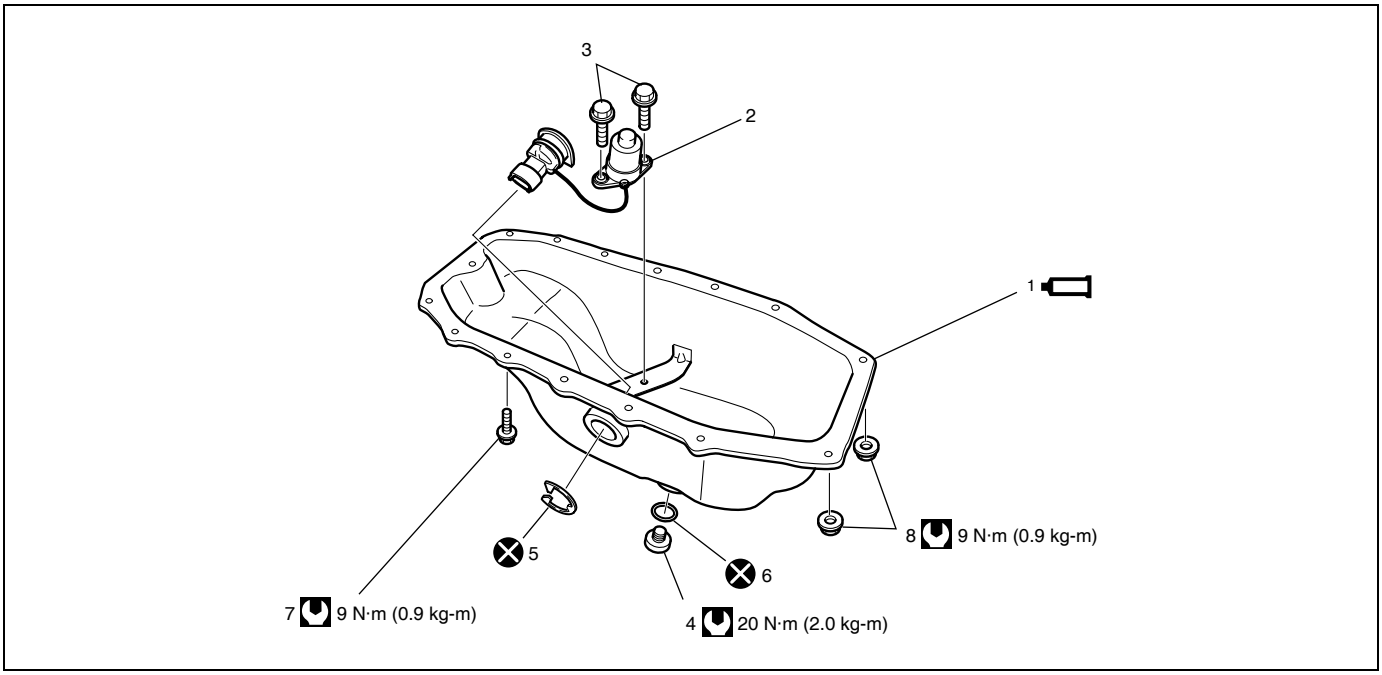

1. Oil pan :Apply Locktite 5900 to mating surface.	4. Drain plug	7. Oil pan bolt	Tightening torque
2. Oil level switch	5. Clip	8. Oil pan nut	Do not reuse.
3. Oil level switch bolt	6. O-ring		

Oil Pan Removal and Installation

Removal

1) Remove oil level gauge.
2) Hoist vehicle.

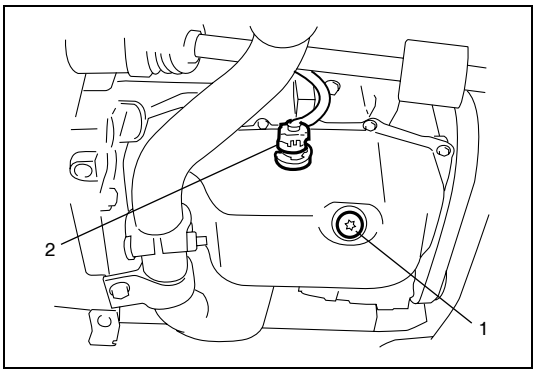

3) Drain engine oil by removing drain plug (1).
4) Disconnect oil level switch connector (2).
5) Remove exhaust No.1 pipe referring to “Exhaust Pipe Removal and Installation” in Section 6K3.
6) Remove transaxle stiffener referring to “Transaxle Unit Dismounting and Remounting” in Section 7A3.

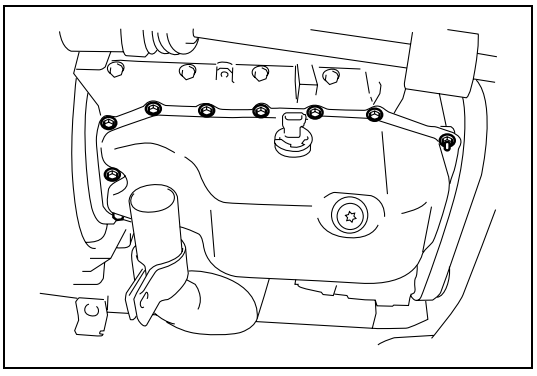

7) Remove oil pan bolts and nuts.

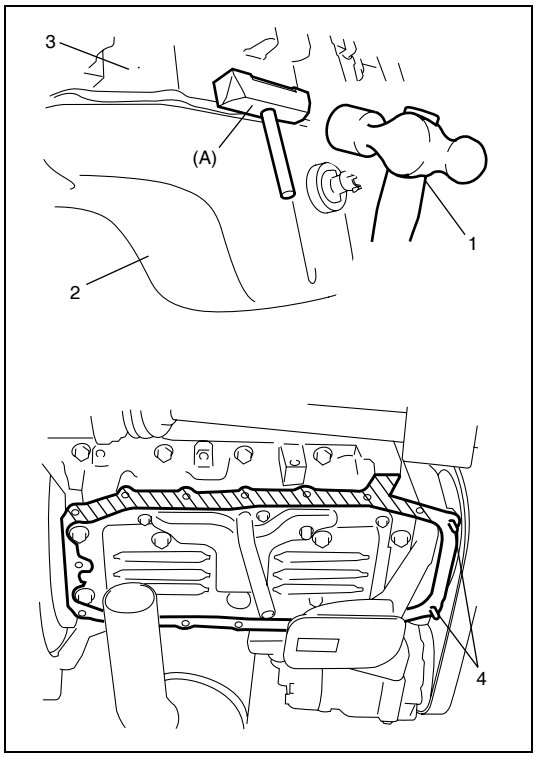

8) Cut sealant at hatched part shown in figure using special tool and hammer (1).

Special tool
(A): 09921-96510

NOTE:

Be careful not to damage stud bolt (4) between oil pan and crankcase when cutting sealant.

9) Remove oil pan (2) from lower crankcase (3).

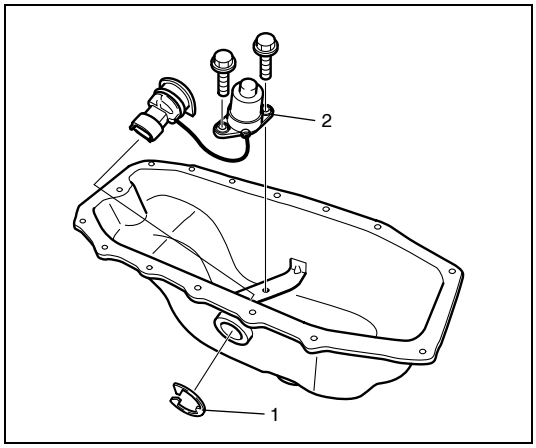

10) Remove clip (1) and oil level switch (2) from oil pan, if necessary.

Installation

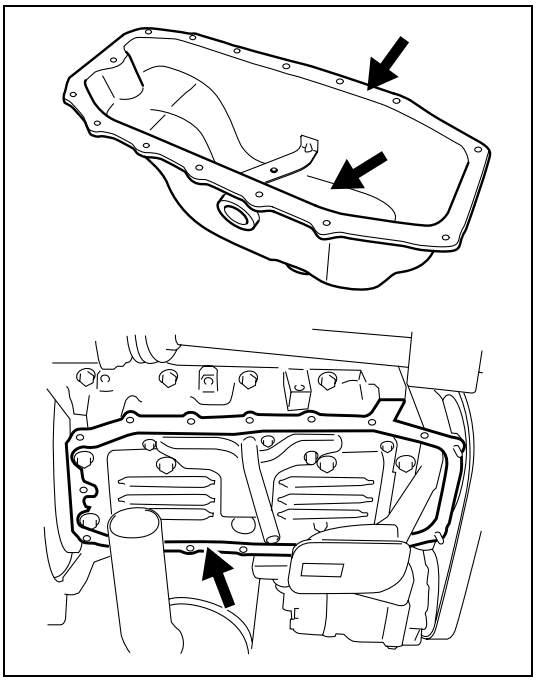

1) Clean mating surfaces of oil pan and lower crankcase.

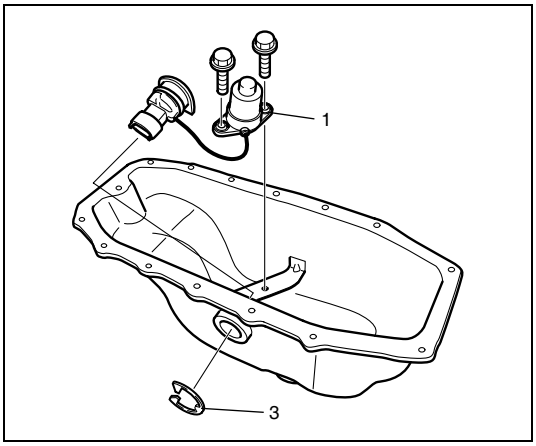

2) Install oil level switch (1) to oil pan, if removed.
3) Install new clip (3) to oil level switch connector securely.

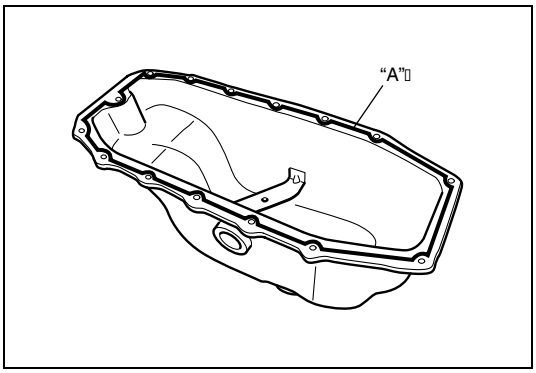

4) Apply sealant to oil pan mating surface continuously as shown in the figure.

"A": Locktite 5900

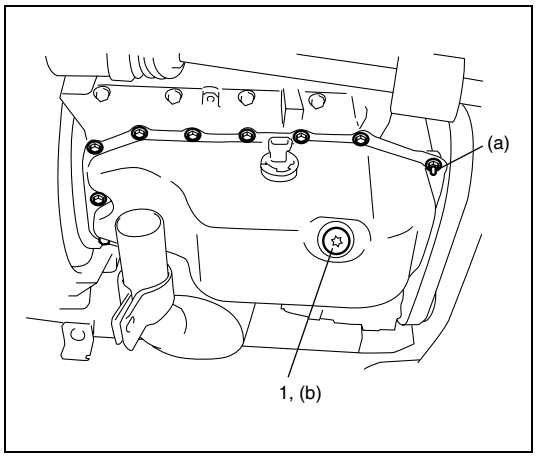

5) After fitting oil pan to lower crankcase, run in securing bolts and start tightening at the center: move wrench outward, tightening one bolt at a time.
   Tighten oil pan bolts and nuts to specified torque.

Tightening torque
Oil pan bolt and nut (a): 9 N·m (0.9 kg-m, 7.0 lb-ft)

6) Install new O-ring and drain plug (1) to oil pan.
   Tighten drain plug to specified torque.

Tightening torque
Drain plug (b): 20 N·m (2.0 kg-m, 14.5 lb-ft)

7) Install transaxle stiffener referring to “Transaxle Unit Dismounting and Remounting” in Section 7A3.
8) Install exhaust No.1 pipe referring to “Exhaust Pipe Removal and Installation” in Section 6K3.
9) Connect oil level switch connector.
10) Install oil level gauge.
11) Refill engine with engine oil referring to “Engine Oil and Oil Filter Replacement” in Section 0B.
12) Check to make sure that there is no engine oil leakage and exhaust gas leakage at each connection.

Unit Repair Overhaul

Engine Assembly Removal and Installation

Removal

1) Relieve fuel pressure referring to “Fuel Pressure Relief Procedure” in Section 6E3.
2) Disconnect negative cable at battery.
3) Remove engine hood after disconnecting windshield washer hose.
4) Drain coolant referring to “Cooling System Flush and Refill” in Section 6B3.
5) For RB413D, remove battery tray with degassing tank.
6) Remove air cleaner assembly with MAF sensor assembly referring to “Air Cleaner Assembly Removal and Installation” in this section.
7) Remove inter cooler inlet hose and inter cooler outlet No.1 and No.2 hoses referring to “Inter Cooler Components” in this section.
8) Disconnect the following cables from transaxle.
   - Clutch cable
   - Gear select control cable
   - Gear shift control cable

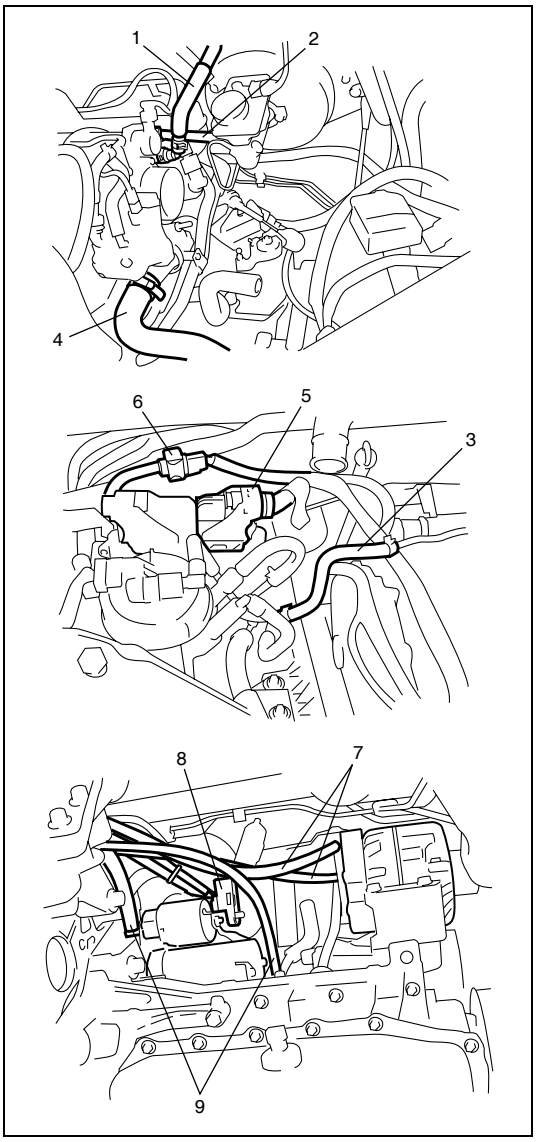

9) Disconnect the following hoses.
   - Brake booster hose (1)
   - Fuel return hose (2)
   - Fuel feed hose (3)
   - Radiator inlet (4) and outlet hoses
   - Heater inlet and outlet hoses
   - Reservoir hoses (for RM413D)
10) Disconnect the following electric lead wires.
   - ECM (5)
   - Injector harness to instrument panel harness (6)
   - Injector harness to main harness
   - Back up light switch
   - Magnet clutch switch of A/C compressor (if equipped)
   - Generator (7)
   - Starting motor (8)
   - Engine oil level sensor
   - Engine ground (9)
   - Each wire harness clamps
11) Remove right and left side engine under covers.
12) Remove water pump and generator drive belt referring to "Water Pump / Generator Drive Belt Removal and Installation" in Section 6B3.
13) With hose connected, detach A/C compressor from its bracket. (if equipped)

NOTE:

Suspend removed A/C compressor at a place where no damage will be caused during removal and installation of engine assembly.

14) Drain engine oil referring to "Engine Oil and Oil Filter Replacement" in Section 0B.
15) Drain transaxle oil referring to "Manual Transaxle Oil Change" in Section 7A3.

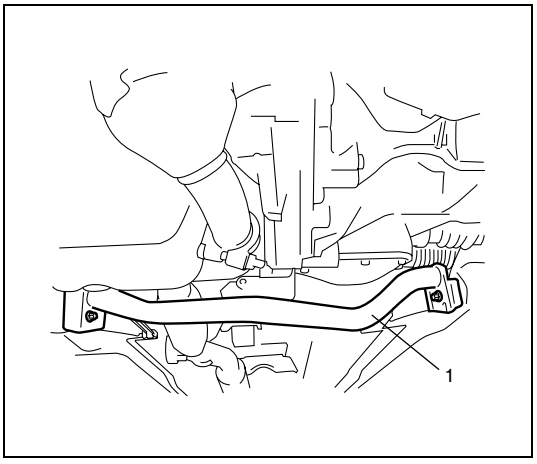

16) For RM413D, remove cross member (1).
17) Remove exhaust No.1 pipe referring to "Exhaust Pipe Removal and Installation" in Section 6K3.
18) Remove stabilizer bar referring to "Stabilizer Bar and Bushings Removal and Installation" for RM413D or "Stabilizer Bar and Bushings" for RB413D in Section 3D.
19) Disconnect right and left drive shaft joints from differential gear referring to "Front Drive Shaft Assembly Removal and Installation" in Section 4A for RM413D or "Front Drive Shaft Assembly Removal and Installation" in Section 4A2 for RB413D.

NOTE:

For engine and transaxle removal, it is not necessary to remove drive shafts from steering knuckle.

20) Support engine with lifting device.

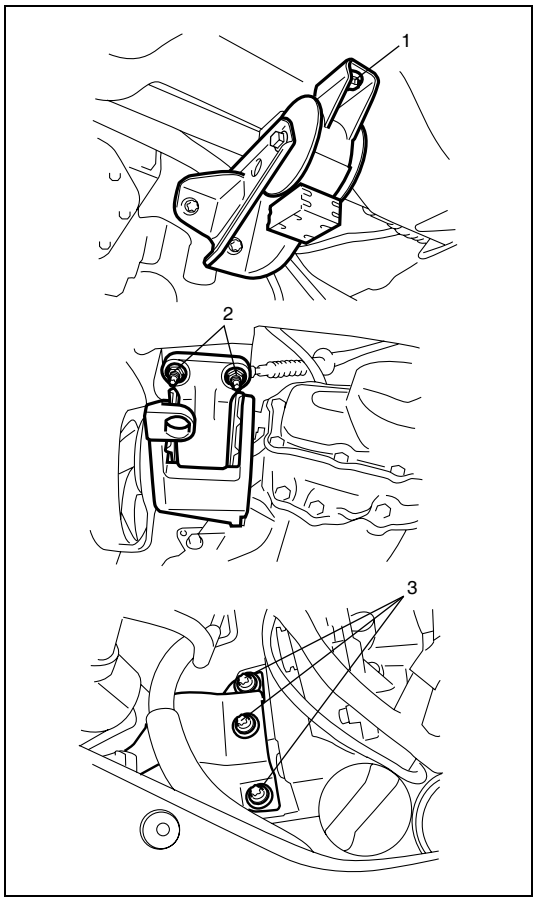

21) Remove engine rear mounting bolts (1), engine left mounting nuts (2) and engine right mounting bracket bolts (3).
22) Before removing engine with transaxle from vehicle, recheck to make sure all hoses, electric wires and cables are disconnected from engine and transaxle.

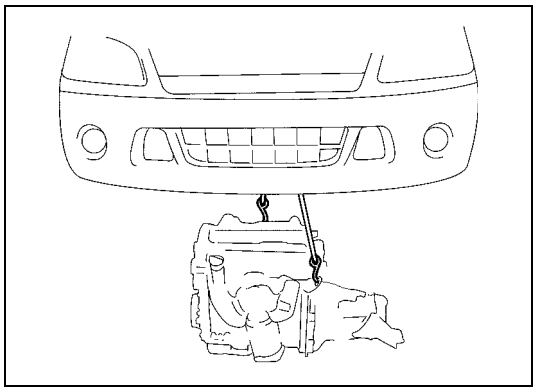

23) Lower engine with transaxle from vehicle.

NOTE:

Before lowering engine, to avoid damage to A/C compressor, raise it through clearance made on engine crankshaft pulley side. At this time, use care so that no excessive force is applied to hoses.

24) Disconnect transaxle from engine referring to “Transaxle Unit Dismounting and Remounting” in Section 7A3.
25) Remove clutch cover and clutch disc referring to “Clutch Cover, Clutch Disc and Flywheel Removal and Installation” in Section 7C3.

Installation

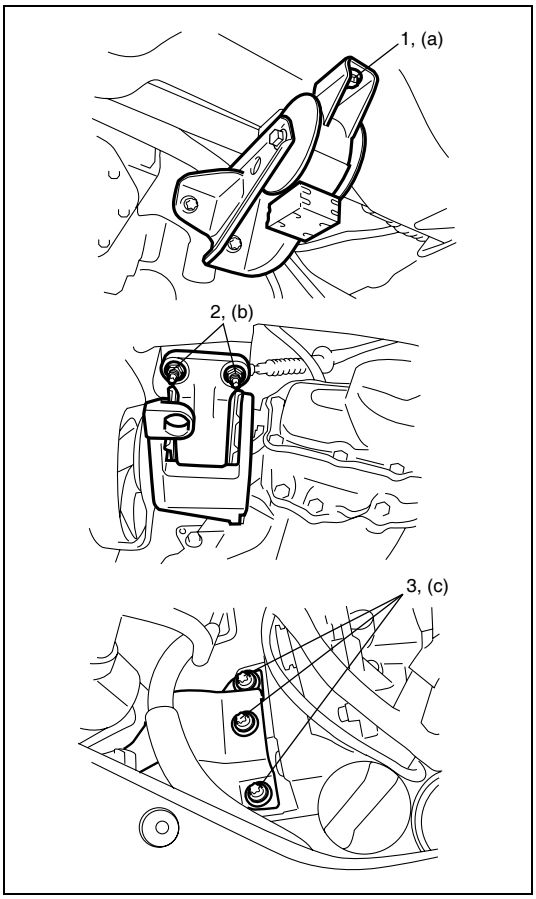

1) Install clutch cover and clutch disc referring to “Clutch Cover, Clutch Disc and Flywheel Removal and Installation” in Section 7C3.
2) Connect transaxle to engine referring to “Transaxle Unit Dismounting and Remounting” in Section 7A3.
3) Lift engine with transaxle into engine compartment, but do not remove lifting device.
4) Install engine rear mounting bolts (1), engine left mounting nuts (2) and engine right mounting bracket bolts (3).
   Tighten these bolts and nuts to specified torque.

Tightening torque
Engine rear mounting bolt
(a): 55 N·m (5.5 kg-m, 40.0 lb-ft)
Engine left mounting nut
(b): 55 N·m (5.5 kg-m, 40.0 lb-ft)
Engine right mounting bracket bolt
(c): 55 N·m (5.5 kg-m, 40.0 lb-ft)

5) Remove lifting device.
6) Connect right and left drive shaft joints to differential gear referring to “Front Drive Shaft Assembly Removal and Installation” in Section 4A for RM413D or “Front Drive Shaft Assembly Removal and Installation” in Section 4A2 for RB413D.
7) Install stabilizer bar referring to “Stabilizer Bar and Bushings Removal and Installation” in Section 3D.
8) Install exhaust No.1 pipe referring to “Exhaust Pipe Removal and Installation” in Section 6K3.

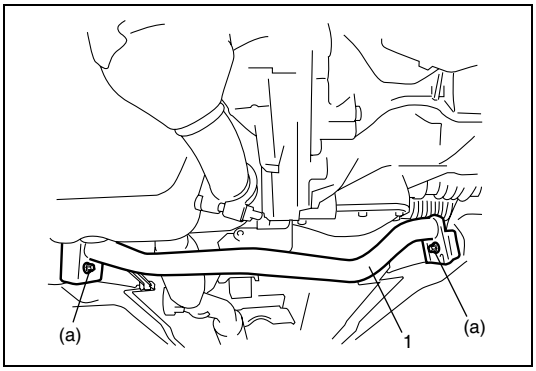

9) For RM413D, install cross member (1).
   Tighten cross member bolts to specified torque.

Tightening torque
Cross member bolt (a): 60 N·m (6.0 kg-m, 43.0 lb-ft)

10) Install A/C compressor to its bracket. (if equipped)
11) Adjust water pump and generator drive belt tension referring to “Water Pump / Generator Drive Belt Tension Inspection” in Section 6B3.
12) Connect hoses, cables and electric wires disconnected in removal procedure.
13) Install inter cooler inlet hose and inter cooler outlet No.1 and No.2 hoses referring to “Inter Cooler Components” in this section.
14) Install air cleaner assembly referring to “Air Cleaner Assembly Removal and Installation” in this section.
15) For RB413D, install battery tray with degassing tank.
16) Check to ensure that all removed parts are back in place. Reinstall any necessary parts which have not been reinstalled.
17) Refill engine oil referring to “Engine Oil and Oil Filter Replacement” in Section 0B.

18) Refill transaxle oil referring to “Manual Transaxle Oil Change” in Section 7A3.
19) Refill coolant referring to “Cooling System Flush and Refill” in Section 6B3.
20) Connect negative cable to battery.
21) Verify that there is no fuel leakage, coolant leakage, oil leakage and exhaust gas leakage at each connection.

Special Tool

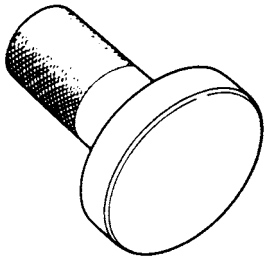	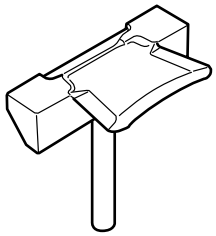
09913-75510 Bearing installer	09921-96510 Oil pan seal cutter

Required Service Material

Recommended SUZUKI product or specification	Use
Locktite 5900	• To apply mating surfaces of cylinder block and oil pan.

Tightening Torque Specifications

Fastening part	Tightening torque		
	N•m	kg-m	lb-ft
Inter cooler hose clamp	3	0.3	2.5
Oil return pipe bolt	12	1.2	9.0
Catalytic converter bolt	25	2.5	18.0
Catalytic converter mounting bolt	25	2.5	18.0
Turbocharger nut	25	2.5	18.0
Exhaust manifold cover nut	9	0.9	7.0
Vacuum pump bolt	Tighten 5 N·m (0.5 kg-m, 4.0 lb-ft) and 10 N·m (1.0 kg-m, 7.5 lb-ft) by the specified procedure		
Oil return pipe bolt	9	0.9	7.0
Lubrication pipe union bolt	12	1.2	9.0
Battery terminal nut	5.5	0.55	4.0
Intake manifold bolt	25	2.5	18.0
Exhaust manifold nut	23	2.3	17.0
Coolant feed pipe bolt	9	0.9	7.0
Common rail bracket bolt	25	2.5	18.0
Oil pump relief valve plug	20	2.0	14.5
Oil pressure switch	32	3.2	23.5
Oil filler port bolt	9	0.9	7.0
Oil cooler bolt	9	0.9	7.0
Oil pan bolt and nut	9	0.9	7.0
Drain plug	20	2.0	14.5
Engine rear mounting bolt	55	5.5	40.0
Engine left mounting nut	55	5.5	40.0
Engine right mounting bracket bolt	55	5.5	40.0
Cross member bolt	60	6.0	43.0

SECTION 6B3

ENGINE COOLING (Z13DT ENGINE)

WARNING:

For vehicles equipped with a Supplemental Restraint (Air Bag) System:

- **Service on and around the air bag system components or wiring must be performed only by an authorized SUZUKI dealer. Refer to "Air Bag System Components and Wiring Location View" under "General Description" in air bag system section in order to confirm whether you are performing service on or near the air bag system components or wiring. Please observe all WARNINGS and "Service Precautions" under "On-Vehicle Service" in air bag system section before performing service on or around the air bag system components or wiring. Failure to follow WARNINGS could result in unintentional activation of the system or could render the system inoperative. Either of these two conditions may result in severe injury.**
- **Technical service work must be started at least 90 seconds after the ignition switch is turned to the "LOCK" position and the negative cable is disconnected from the battery. Otherwise, the system may be activated by reserve energy in the Sensing and Diagnostic Module (SDM).**

CONTENTS

General Description 6B3-2
Cooling System Circulation 6B3-2
Coolant Degassing Tank 6B3-3
Diagnosis 6B3-3
Diagnosis Table 6B3-3
Coolant 6B3-4
Maintenance 6B3-4
Coolant Level Check 6B3-5
Cooling System Inspection and Service 6B3-5
Cooling System Flush and Refill 6B3-6
Water Pump / Generator Drive Belt Tension Inspection 6B3-7
On-Vehicle Service 6B3-8
Cooling System Component 6B3-9
Cooling System Draining 6B3-11
Cooling System Refill 6B3-11
Cooling Water Pipes or Hoses 6B3-11
Thermostat Case Assembly Removal and Installation 6B3-12
Radiator Removal and Installation 6B3-13
Radiator Inspection 6B3-14
Radiator Cleaning 6B3-14
Radiator Cooling Fan Relay Inspection 6B3-14
Radiator Cooling Fan Removal and Installation 6B3-14
Radiator Cooling Fan Inspection 6B3-15
Water Pump / Generator Drive Belt Removal and Installation 6B3-15
Water Pump / Generator Drive Belt Tensioner Assembly Removal and Installation 6B3-16
Water Pump Removal and Installation 6B3-17
Water Pump Inspection 6B3-17
Engine Coolant Temperature Sensor (ECT Sensor) Removal and Installation 6B3-18
Engine Coolant Temperature Sensor (ECT Sensor) Inspection 6B3-18
Required Service Material 6B3-18
Tightening Torque Specification 6B3-18

General Description

The cooling system consists of the degassing tank cap, radiator, degassing tank, hoses, water pump, cooling fan, thermostat. The radiator is of tube-and-fin type.

Cooling System Circulation

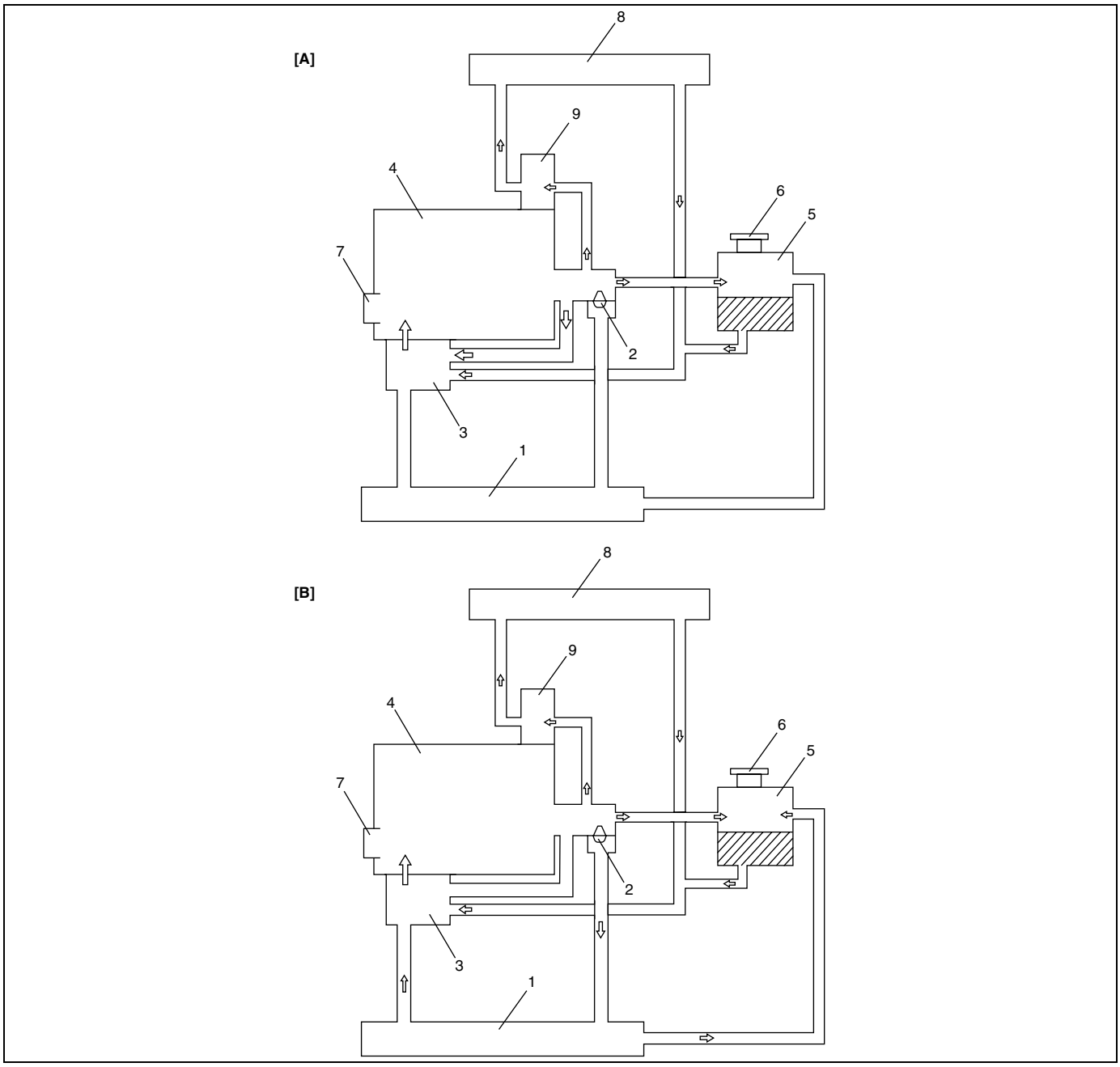

[A]: When thermostat is close	2. Thermostat	5. Degassing tank	8 Heater
[B]: When thermostat is open	3. Engine oil cooler	6. Degassing tank cap (Radiator cap)	9. EGR cooler
1. Radiator	4. Engine	7. Water pump	

Coolant Degassing Tank

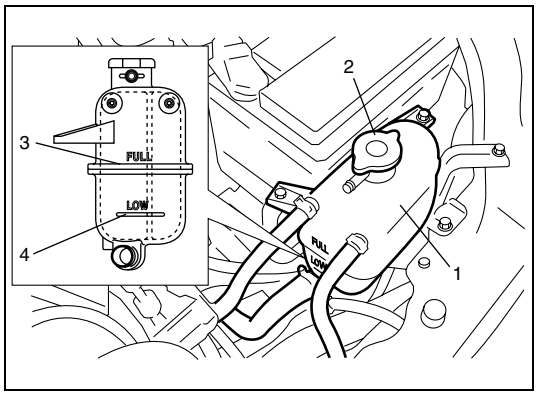

The degassing tank (1) consists of a “see-through” plastic tank, a hose and a degassing tank cap (2).
During operation, inside of the degassing tank is under pressure. As the coolant warms up and expands, the coolant level in the degassing tank rises. On the other hand, it lowers as the coolant cools down and contracts. When the pressure applied to the inside of the degassing tank constantly exceeds the specified value, the pressure is relieved through the degassing tank cap.
Therefore, cooling level should be between “FULL” (3) and “LOW” (4) marks on the degassing tank.

Diagnosis

Diagnosis Table

Condition	Possible Cause	Correction
Engine overheats (It is in case that radiator fan operates)	Loose or broken water pump belt	Adjust or replace.
	Not enough coolant	Check coolant level and add as necessary.
	Faulty thermostat	Replace.
	Faulty water pump	Replace.
	Dirty or bent radiator fins	Clean or remedy.
	Coolant leakage on cooling system	Repair.
	Clogged radiator	Check and replace radiator as necessary.
	Faulty degassing tank cap	Replace.
	Dragging brakes	Adjust brake.
	Slipping clutch	Adjust or replace.
	Poor charge battery	Check and replace as necessary.
	Poor generation generator	Check and repair.
	ECT sensor faulty	Check and replace as necessary.
	ECM faulty	Check and replace as necessary.
	Wiring or grounding faulty	Repair and necessary.
	Equipped with too much electric load part(s)	Dismount.
	Radiator cooling fan motor faulty	Check and replace as necessary.
Engine overheats (It is in case that radiator fan won’t operates)	Fuse blown	Check 30A fuse of relay/fuse box and check for short circuit to ground.
	Radiator cooling fan relay	Check and replace as necessary.
	ECT sensor faulty	Check and replace as necessary.
	Radiator cooling fan motor faulty	Check and replace as necessary.
	Wiring or grounding faulty	Repair as necessary.
	ECM faulty	Check and replace as necessary.

Coolant

When the system cools down, the coolant is drawn back into the radiator.
The cooling system has been filled at the factory with a quality coolant that is a 50/50 mixture of water and ethylene glycol antifreeze.
This 50/50 mixture coolant solution provides freezing protection to –36 °C (–33 °F).

- Maintain cooling system freeze protection at –36 °C (–33 °F) to ensure protection against corrosion and loss of coolant from boiling.
  This should be done even if freezing temperatures are not expected.
- Add ethylene glycol base coolant when coolant has to be added because of coolant loss or to provide added protection against freezing at temperature lower than –36 °C (–33 °F).

Anti-freeze proportioning chart

Freezing temperature	**°C**	**–36**
	°F	**–33**
Antifreeze/Anticorrosion coolant concentration	**%**	**50**
Ratio of compound to cooling water	**ltr.**	**2.65/2.65**
	US pt.	**5.65/5.65**
	Imp pt.	**4.66/4.66**

Coolant capacity

	Engine, radiator heater and degassing tank etc.
ltr. (US/Imp. pt.)	**5.3 (11.30/9.33)**

NOTE:

- **Alcohol or methanol base coolant or plain water alone should not be used in cooling system at any time as damage to cooling system could occur.**
- **Coolant must be mixed with demineraled water or distilled water.**

Maintenance

WARNING:

- **Keep hands, tools and clothing away from radiator cooling fan to help prevent personal injury. This fan is electric and can turn on whether engine is running or not. The fan can start automatically in response to ECM with ignition switch turned on.**
- **To help avoid danger of being burned, do nut remove degassing tank cap while engine and radiator are still hot.**
  Scalding fluid and steam can be blown out under pressure if cap is taken off too soon.

Coolant Level Check

Coolant Level

WARNING:
To help avoid danger of being burned, do not remove degassing tank cap while engine and radiator are still hot.
Scalding fluid and steam can be blown out under pressure if cap is taken off too soon.

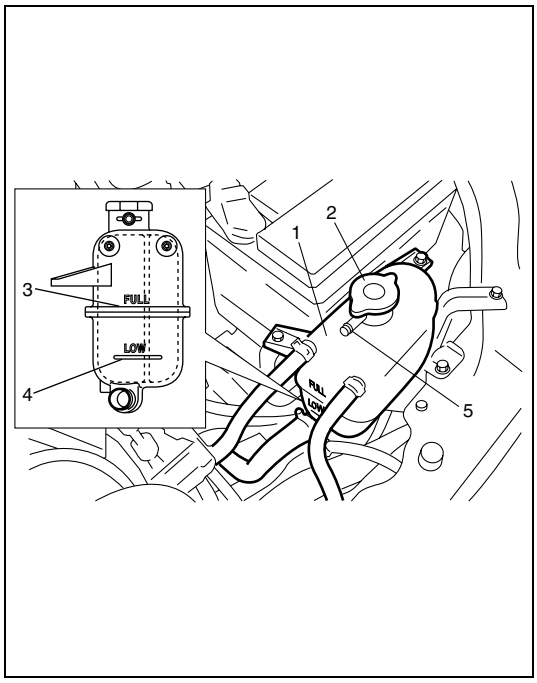

To check level, lift hood and look at “see-through” degassing tank (1). It is not necessary to remove degassing tank cap (2) to check coolant level.
When engine is cool, check coolant level in degassing tank (1).
A normal coolant level should be between “FULL” mark (3) and “LOW” mark (4) on degassing tank (1).
If coolant level is below “LOW” mark, remove degassing tank cap and add recommended coolant to tank to bring coolant level up to “FULL” mark. Then, install degassing tank cap, making sure that the ear of cap lines up with degassing tank pipe (5).

NOTE:

- **If proper quality antifreeze is used, there is no need to add extra inhibitors or additives that claim to improve system.**
  They may be harmful to proper operation of system, and are unnecessary expense.

Cooling System Inspection and Service

WARNING:
To help avoid danger of being burned, do not remove degassing tank cap while engine and radiator are still hot.
Scalding fluid and steam can be blown out under pressure if cap is taken off too soon.

Cooling system should be serviced as follows.

1) Check cooling system for leakage or damage.
2) Wash degassing tank cap and filler neck with clean water by removing degassing tank cap when engine is cold.
3) Check coolant for proper level and freeze protection.

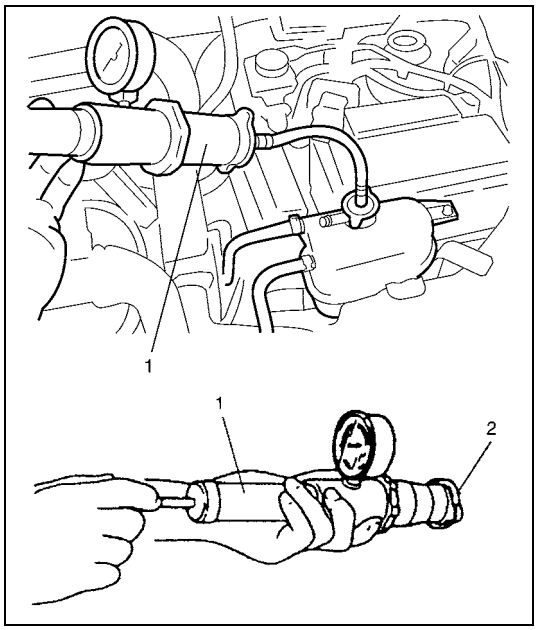

4) Using a pressure tester (1), check system and degassing tank cap (2) for proper pressure holding capacity. If replacement of cap is required, use proper cap specified for this vehicle.

Cooling system and degassing tank cap holding pressure (for inspection)

: 140 kpa (1.4 kg/cm^2, 19.9 psi)

5) Install degassing tank cap to degassing tank turning it clockwise up to stop.
6) Tighten hose clamps and inspect all hoses. Replace hoses whenever cracked, swollen or otherwise deteriorated.
7) Clean frontal area of radiator core.

Cooling System Flush and Refill

WARNING:

To help avoid danger of being burned, do not remove degassing tank cap while engine and radiator are still hot. Scalding fluid and steam can be blown out under pressure if cap is taken off too soon.

1) Remove degassing tank cap when engine is cool:
   Turn cap 90° counterclockwise slowly.
   Wait until pressure is relieved (indicated by a hissing sound) then continue to turn it counterclockwise.
2) With degassing tank cap removed, run engine until upper radiator hose is hot (this shows that thermostat is open and coolant is flowing through system).
3) Stop engine and drain coolant.

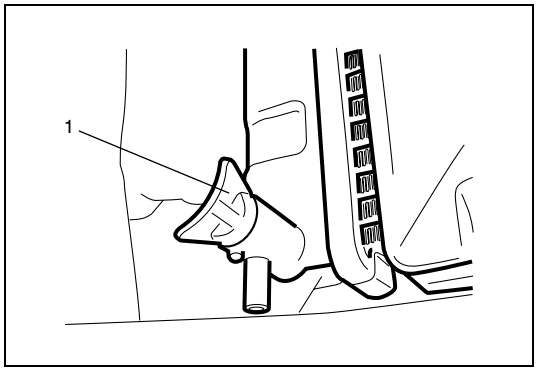

4) Close drain plug (1). Add water until system is filled and run engine until upper radiator hose is hot again.
5) Repeat steps 3) and 4) several times until drained liquid is nearly colorless.
6) Drain system and then close radiator drain plug (1) tightly.

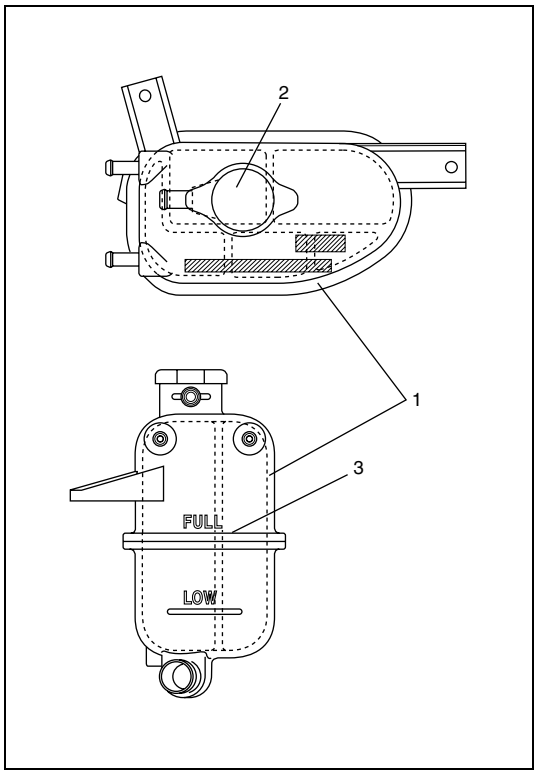

7) Disconnect coolant hose of upper side from thermostat case. If it is hard to disconnect it after removing clip, push to insert hose to pipe a little further in order to unstick hose from pipe and disconnect it.
8) Remove degassing tank cap (2) as follows.
   a) Turn cap 90° counterclockwise slowly.
   b) Wait till any pressure is released, then continue turning it counterclockwise.
9) Pour coolant (50/50 mixture of good quality ethylene glycol antifreeze and water) to degassing tank up to "FULL" mark (3). Put a shop cloth under disconnected hose end so that coolant is not spilled on engine and floor because a small amount of air bubbles and/or coolant may come out of it.
10) Connect hose to thermostat case.
11) Run engine, with degassing tank cap (2) removed, until radiator inlet hose is hot.
12) With engine idling, add coolant to degassing tank (1) until level reaches "FULL" mark (3).
    Install degassing tank cap (2) turning it clockwise up to stop.

Water Pump / Generator Drive Belt Tension Inspection

WARNING:
To help avoid danger of being burned, do not remove degassing tank cap while engine and radiator are still hot. Scalding fluid and steam can be blown out under pressure if cap is taken off too soon.

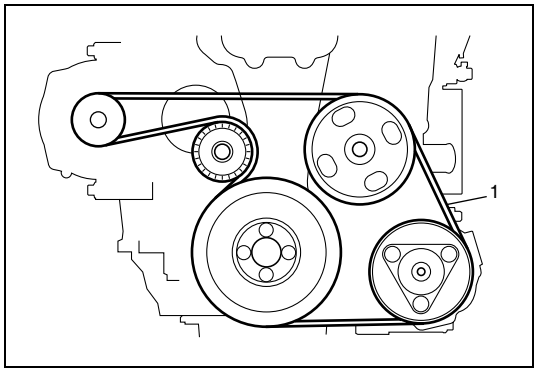

1) Disconnect negative (–) cable at battery.
2) Inspect drive belt (1) for tension, cracks, cuts, deformation, wear and cleanliness. If any defect exists, replace drive belt referring to "Water Pump / Generator Drive Belt Removal and Installation" in this section.
3) Connect negative (–) cable at battery.

On-Vehicle Service

WARNING:

- **Check to make sure that engine coolant temperature is cold before removing any part of cooling system.**
- **Also be sure to disconnect negative cord from battery terminal before removing any part.**

Cooling System Component

For RM413D

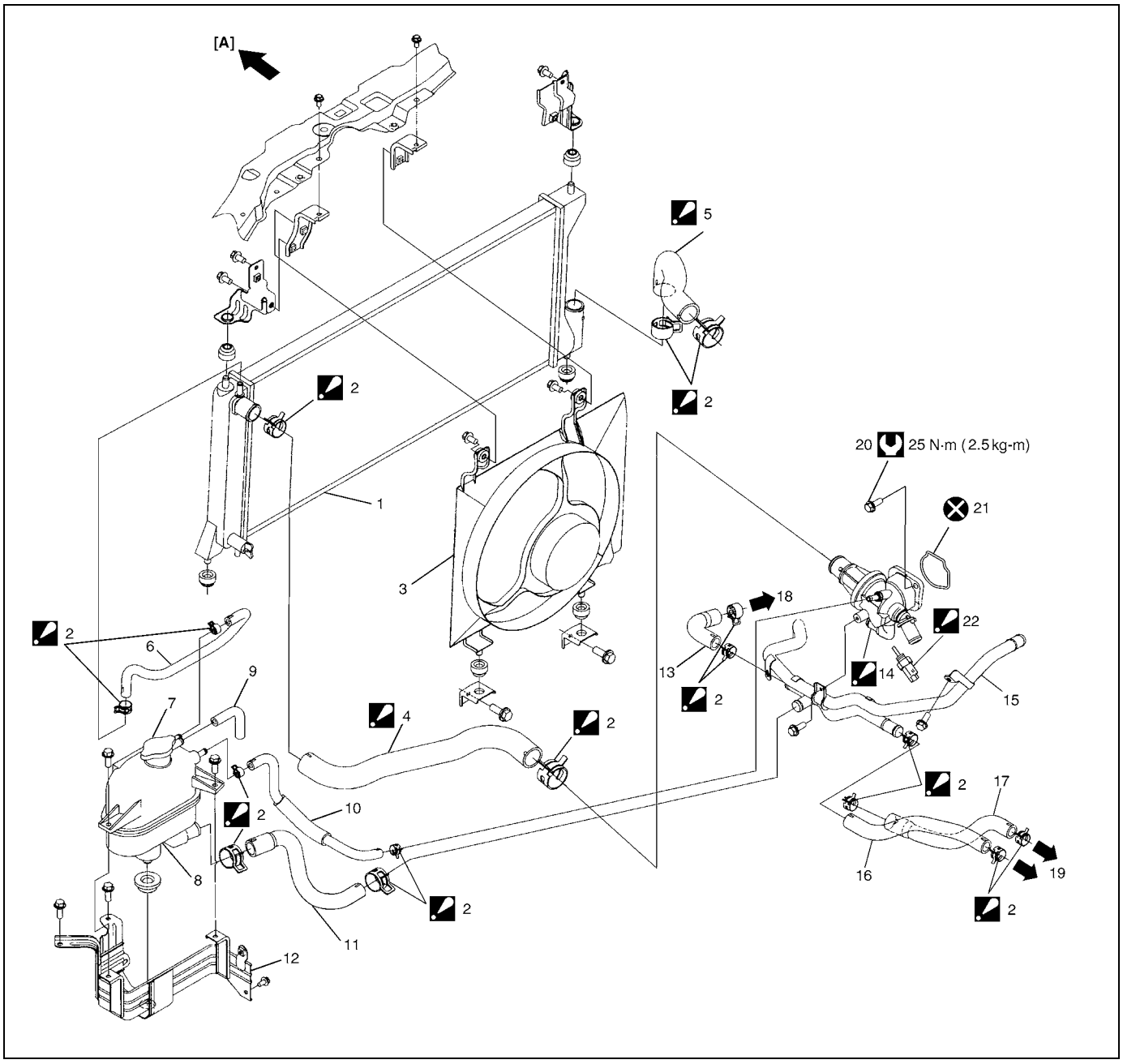

[A]: Forward	9. Reservoir tank vent pipe hose	18. To engine side
1. Radiator assembly	10. Water engine outlet hose	19. To heater side
2. Hose clip Be sure to position clip in specified direction as shown in figure.	11. Degassing tank outlet hose	20. Thermostat case bolt
3. Radiator cooling fan assembly	12. Degassing tank bracket	21. O-ring
4. Radiator inlet hose Be sure to connect hose aligning hose mark with stopper.	13. Heater outlet No.2 hose	22. ECT sensor For detail of servicing, refer to “Engine coolant temperature sensor (ECT sensor) removal and installation” and “Engine coolant temperature sensor (ECT sensor) inspection” in Section 6E3.
5. Radiator outlet hose Be sure to connect hose aligning hose mark with stopper.	14. Thermostat case assembly : Do not disassemble	Do not reuse.
6. Radiator to degassing tank hose	15. Heater outlet pipe	Tightening torque
7. Degassing tank cap	16. Heater outlet No.1 hose	
8. Degassing tank	17. Heater inlet hose	

For RB413D

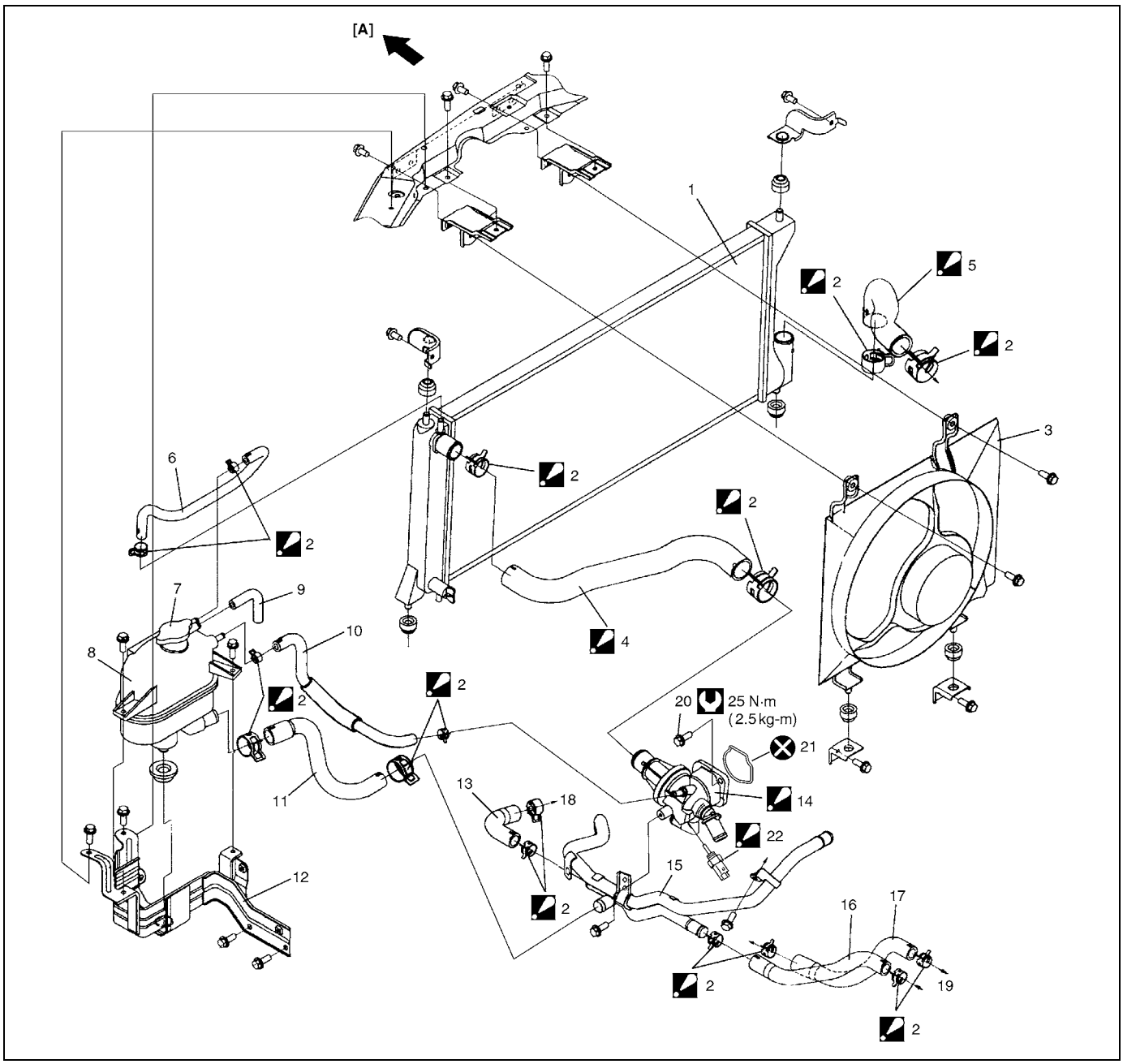

	[A]:	Forward	9.	Reservoir tank vent pipe hose	18. To engine side
	1.	Radiator assembly	10.	Water engine outlet hose	19. To heater side
◢	2.	Hose clip Be sure to position clip in specified direction as shown in figure.	11.	Degassing tank outlet hose	20. Thermostat case bolt
	3.	Radiator cooling fan assembly	12.	Degassing tank bracket	21. O-ring
◢	4.	Radiator inlet hose Be sure to connect hose aligning hose mark with stopper.	13.	Heater outlet No.2 hose	◢ 22. ECT sensor For detail of servicing, refer to “Engine coolant temperature sensor (ECT sensor) removal and installation” and “Engine coolant temperature sensor (ECT sensor) inspection” in Section 6E3.
◢	5.	Radiator outlet hose Be sure to connect hose aligning hose mark with stopper.	◢	14. Thermostat case assembly : Do not disassemble	⊗ Do not reuse.
	6.	Radiator to degassing tank hose	15.	Heater outlet pipe	Tightening torque
	7.	Degassing tank cap	16.	Heater outlet No.1 hose	
	8.	Degassing tank	17.	Heater inlet hose	

Cooling System Draining

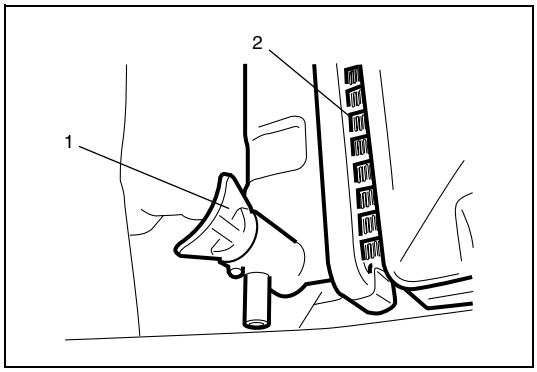

1) Remove degassing tank cap.
2) Loosen drain plug (1) on radiator (2) to drain coolant.
3) After draining coolant, be sure to tighten drain plug securely.

Cooling System Refill

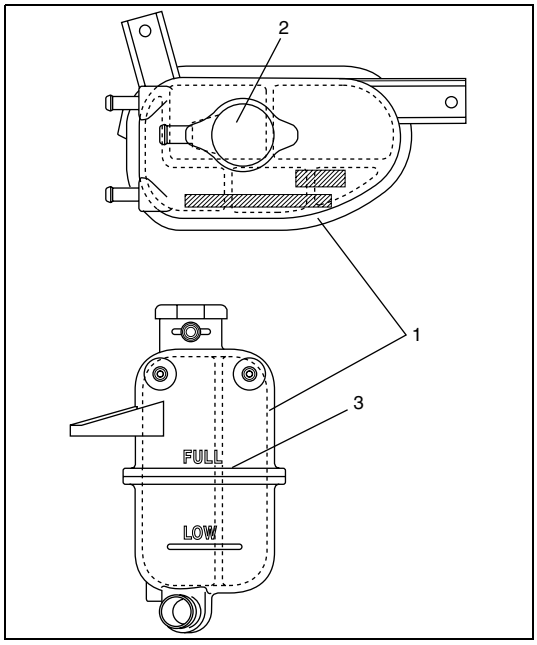

1) Add 50/50 mixture of good quality ethylene glycol antifreeze and water to degassing tank (1).
   Fill to “FULL” mark (3).
2) Run engine, with degassing tank cap (2) removed, until radiator upper hose is hot.
3) With engine idling, add coolant to degassing tank (1) until level reaches “FULL” mark.
   Install degassing tank cap (2) turning it clockwise up to stop.

Cooling Water Pipes or Hoses

Removal

1) Drain coolant referring to “Cooling System Draining” in this section.
2) To remove these pipes or hoses, loosen clip on each hose and pull hose end off.

Installation

Install removed parts in reverse order of removal procedure, noting the following.

- Connect each clip securely referring to “Cooling System Component” in this section.
- Refill cooling system with proper coolant referring to “Cooling System Refill” in this section.

Thermostat Case Assembly Removal and Installation

CAUTION:

Do not disassemble thermostat case assembly. Disassembly will spoil it original function. If any malcondition is found in thermostat case assembly, replace if as assembly.

Removal

1) Drain coolant referring to “Cooling System Draining” in this section.

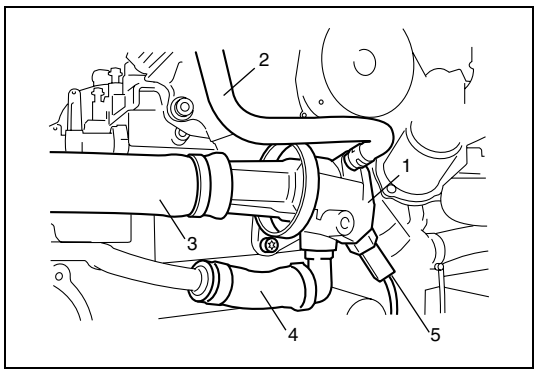

2) Disconnect engine outlet hose (2), radiator inlet hose (3), coolant feed hose (4), ECT sensor connector (5) and thermostat case hose from thermostat case.
3) Remove thermostat case (1).

Installation

Reverse removal procedure for installation noting the following points.

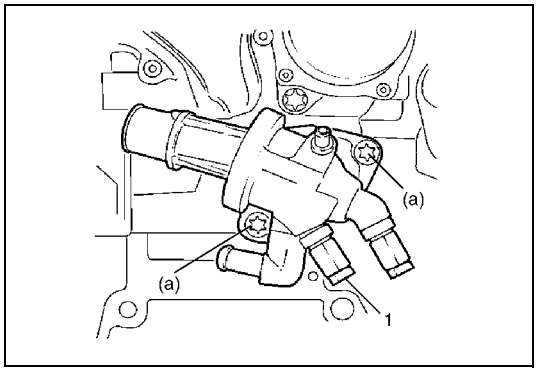

- Use new O-ring when installing.
- Tighten thermostat case bolt to specified torque.

Tightening torque
Thermostat case bolt (a): 25 N·m (2.5 kg-m, 18.0 lb-ft)

- If ECT sensor (1) has been removed, apply thread lock cement to ECT sensor and install ECT sensor to specified torque. For thread lock cement and tightening torque, refer to “Engine coolant temperature sensor (ECT sensor) removal and installation” in Section 6E3.
- Refill cooling system referring to “Cooling System Flush and Refill” in this section.
- Verify that there is no coolant leakage at each connection.

Radiator Removal and Installation

Removal

1) Disconnect negative cable at battery.
2) Drain cooling system referring to “Cooling System Draining” in this section.
3) Recover refrigerant from A/C system referring to “Evacuation of A/C System” for RM413D or “Evacuating and Charging” for RB413D in Section 1B.
4) Disconnect connector of cooling fan motor.
5) Remove front bumper referring to “Front Bumper and Rear Bumper Removal and Installation” for RM413D or “Front Bumper and Rear Bumper” for RB413D in Section 9.
6) Remove condenser assembly referring to “Condenser Assembly Removal and Installation” for RM413D or “A/C Condenser Assembly” for RB413D in Section 1B.
7) Remove inter cooler referring to “Inter Cooler Removal and Installation” in Section 6A3.

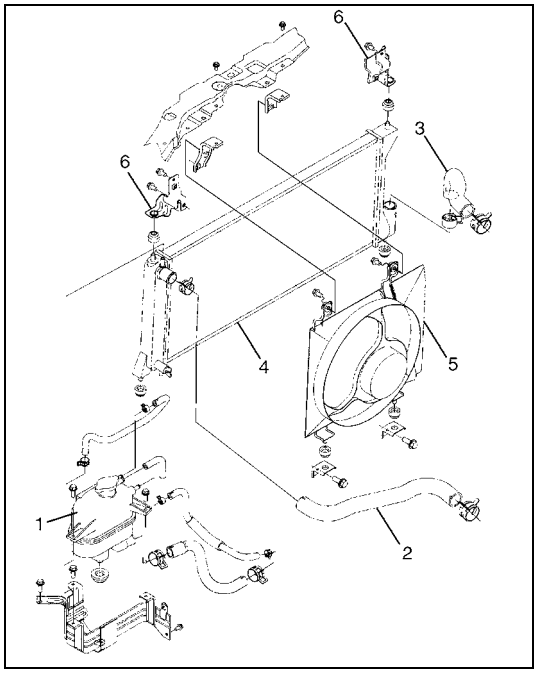

8) Remove degassing tank (1).
9) Disconnect radiator inlet hose (2) and radiator outlet hose (3) from radiator assembly (4).
10) Remove engine cooling fan assembly (5) from radiator.
11) Remove radiator brackets (6) and then remove radiator.

Installation

Reverse removal procedures for installation noting the followings.

- Refill cooling system referring to “Cooling System Refill” in this section.
- Refill A/C system referring to “Charge” for RM413D or “Evacuating and Charging” for RB413D in Section 1B.
- After installation, check each joint for leakage.

Radiator Inspection

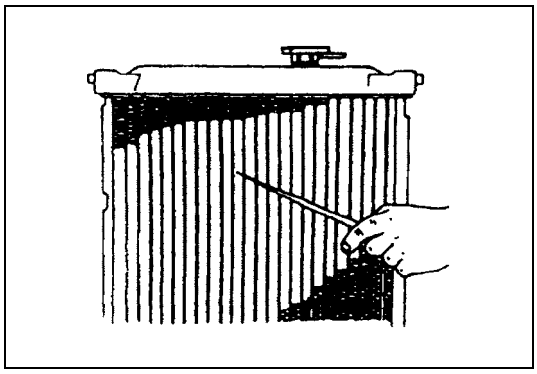

Check radiator for leakage or damage. Straighten bent fins, if any.

Radiator Cleaning

Clean frontal area of radiator cores.

Radiator Cooling Fan Relay Inspection

Refer to “Fuel pump relay and radiator fan relay 1, 2, 3 inspection” in Section 6E3.

Radiator Cooling Fan Removal and Installation

Removal

1) Disconnect negative cable at battery.
2) Drain coolant referring to “Cooling System Draining” in this section.

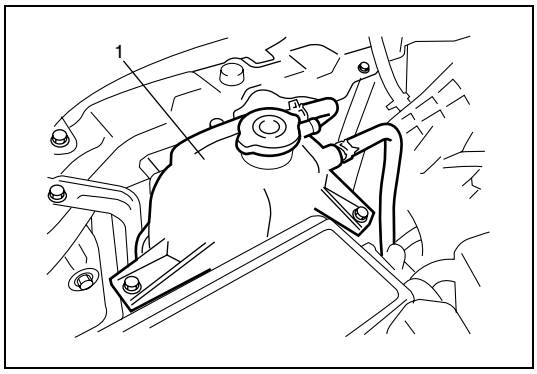

3) Remove degassing tank (1).
4) Disconnect cooling fan motor connector.
5) Remove radiator inlet hose from radiator.

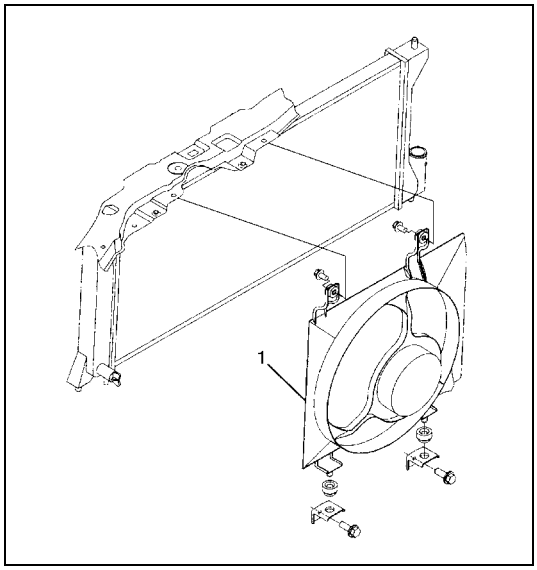

6) Remove radiator cooling fan motor (1) from radiator.

Installation

Reverse removal procedure for installation noting the following.

- Refill cooling system referring to “Cooling System Refill” in this section.
- After installation, verify there is no coolant leakage at each connection.

Radiator Cooling Fan Inspection

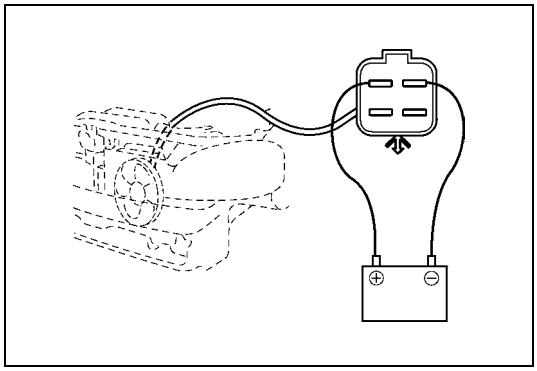

1) Check low speed operation of radiator cooling fan as follows.
   a) Connect battery to fan motor coupler as shown in figure.
   b) Check that radiator cooling fan rotates smoothly and ammeter indicates specified current.
      If any abnormality is found, replace fan motor.

Fan motor specified current at 12 V
10.0 A maximum

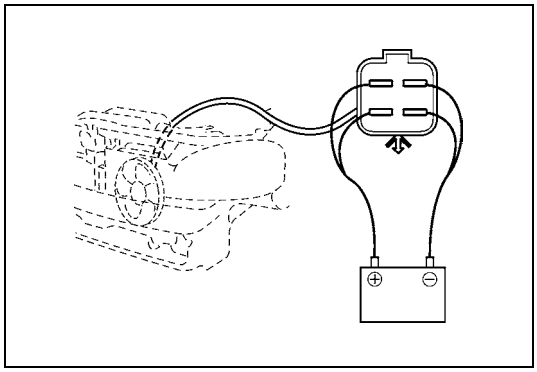

2) Check high speed operation of radiator cooling fan as follows.
   a) Connect battery to fan motor coupler as shown in figure.
   b) Check that radiator cooling fan rotates smoothly and ammeter indicates specified current.
      If any abnormality is found, replace fan motor.

Fan motor specified current at 12 V
15.0 A maximum

Water Pump / Generator Drive Belt Removal and Installation

Removal

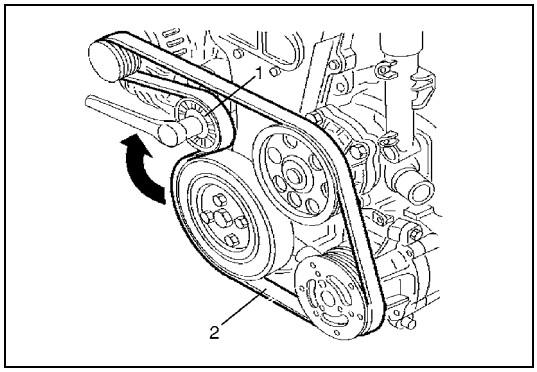

1) Remove drive belt (2) while turning tensioner (1) clockwise until stopping.

Installation

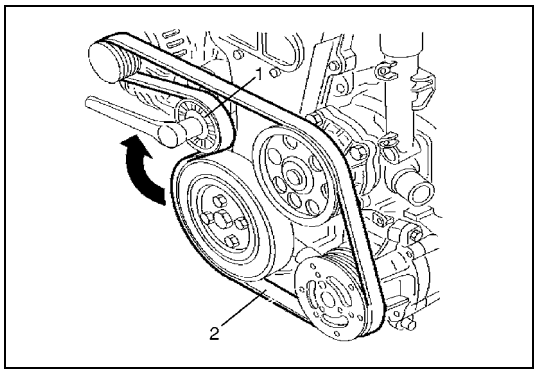

1) Install drive belt (2) while turning tensioner (1) clockwise until stopping.
2) Check drive belt tension referring to “Water Pump / Generator Drive Belt Tension Inspection” in this section.

Water Pump / Generator Drive Belt Tensioner Assembly Removal and Installation

CAUTION:

Do not disassemble drive belt tensioner assembly. Disassembly will spoil its original function. If any malcondition is found in drive belt tensioner assembly, replace it as assembly.

Removal

1) Disconnect negative cable at battery.
2) Remove drive belt referring to “Water Pump / Generator Drive Belt Removal and Installation” in this section.

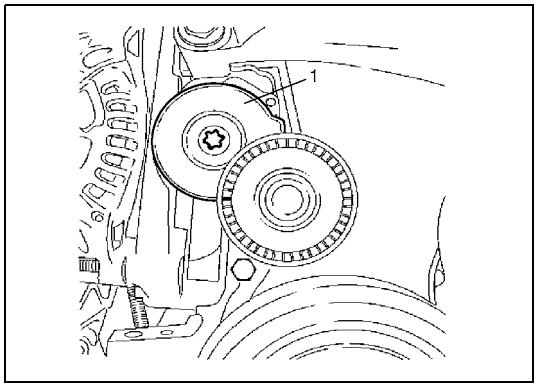

3) Remove tensioner (1).

Installation

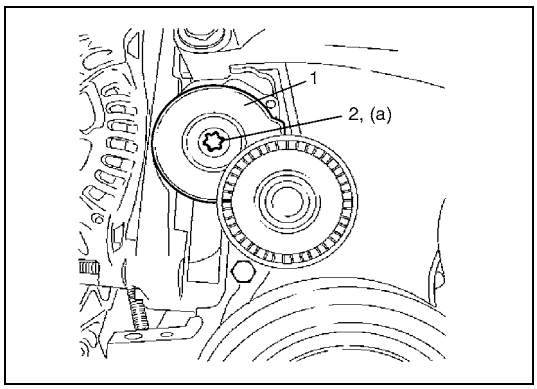

1) Install tensioner (1).
   Tighten tensioner bolt (2) to specified torque.

   Tightening torque
   Tensioner bolt (a): 50 N·m (5.0 kg-m, 36.0 lb-ft)

2) Install drive belt referring to “Water Pump / Generator Drive Belt Removal and Installation” in this section.
3) Check belt tension referring to “Water Pump / Generator Drive Belt Tension Inspection” in this section.

Water Pump Removal and Installation

Removal

1) Drain coolant referring to “Cooling System Draining” in this section.
2) Remove drive belt referring to “Water Pump / Generator Drive Belt Removal and Installation” in this section.

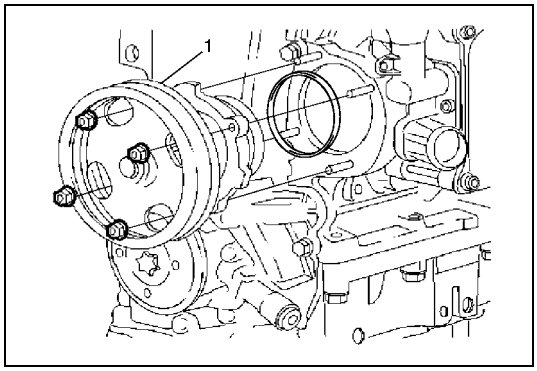

3) Remove water pump assembly (1).

Installation

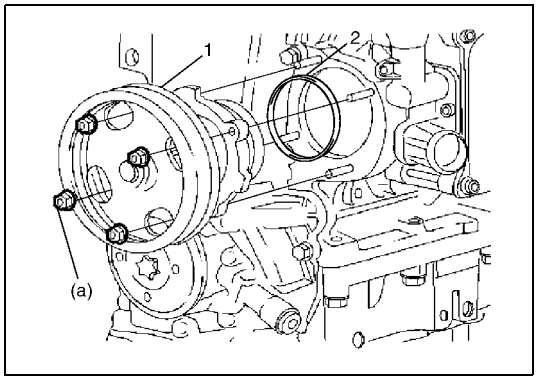

1) Install new O-ring (2) to water pump.
2) Install water pump assembly (1) to cylinder block and tighten nuts to specified torque.

Tightening torque
Water pump nut (a): 9 N·m (0.9 kg-m, 6.5 lb-ft)

3) Install drive belt referring to “Water Pump / Generator Drive Belt Removal and Installation” in this Section.
4) Refill cooling system referring to “Cooling System Flush and Refill” in this section.
5) Check each part for leakage.

Water Pump Inspection

CAUTION:
Do not disassemble water pump.
If any repair is required on pump, replace it as assembly.

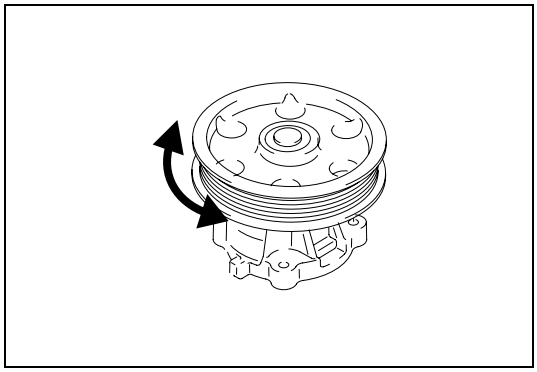

- Rotate water pump by hand to check for smooth operation. If pump does not rotate smoothly or makes abnormal noise, replace it.

Engine Coolant Temperature Sensor (ECT Sensor) Removal and Installation

Refer to “Engine coolant temperature sensor (ECT sensor) removal and installation” in Section 6E3.

Engine Coolant Temperature Sensor (ECT Sensor) Inspection

Refer to “Engine coolant temperature sensor (ECT sensor) inspection” in Section 6E3.

Required Service Material

Material	Recommended SUZUKI product or specification (Part Number)	Use
Ethylene glycol base coolant (Anti-freeze/ Anti-corrosion coolant)	—	Additive to engine cooling system for improving cooling efficiency and for protection against rusting.

Tightening Torque Specification

Fastening part	Tightening torque		
	N•m	kg-m	lb-ft
Thermostat case bolt	25	2.5	18.0
Water pump nut	9	0.9	6.5

SECTION 6C3

ENGINE FUEL (Z13DT ENGINE)

WARNING:

For vehicles equipped with a Supplemental Restraint (Air Bag) System:

- **Service on and around the air bag system components or wiring must be performed only by an authorized SUZUKI dealer. Refer to "Air Bag System Components and Wiring Location View" under "General Description" in air bag system section in order to confirm whether you are performing service on or near the air bag system components or wiring. Please observe all WARNINGS and "Service Precautions" under "On-Vehicle Service" in air bag system section before performing service on or around the air bag system components or wiring. Failure to follow WARNINGS could result in unintentional activation of the system or could render the system inoperative. Either of these two conditions may result in severe injury.**
- **Technical service work must be started at least 90 seconds after the ignition switch is turned to the "LOCK" position and the negative cable is disconnected from the battery. Otherwise, the system may be activated by reserve energy in the Sensing and Diagnostic Module (SDM).**

CONTENTS

General Description 6C3-1
On-Vehicle Service 6C3-2
Fuel System Components 6C3-2
Precautions 6C3-5
Water Draining of Fuel Filter 6C3-6
Air Bleeding of Fuel System 6C3-6
Fuel Line Inspection 6C3-6
Fuel Pipe Removal and Installation 6C3-6
Fuel Filler Cap Inspection 6C3-8
Fuel Tank Inlet Valve Removal and Installation 6C3-8
Fuel Tank Inlet Valve Inspection 6C3-10
Fuel Tank Removal and Installation 6C3-10
Fuel Tank Inspection 6C3-12
Fuel Tank Purging Procedure 6C3-13
Fuel Pump Assembly Removal and Installation 6C3-13
Fuel Pump Inspection 6C3-15
Fuel Filter Element Removal and Installation 6C3-15
Fuel Filter Assembly Removal and Installation 6C3-17
Special Tool 6C3-17
Tightening Torque Specification 6C3-17

General Description

The main components of the fuel system are fuel tank, fuel pump, high pressure fuel pump, fuel filter and fuel level gauge and it includes fuel feed line, fuel return line.

On-Vehicle Service

Fuel System Components

CAUTION:
Do not expose removed fuel parts to dust. Keep them always clean.

For RM413D

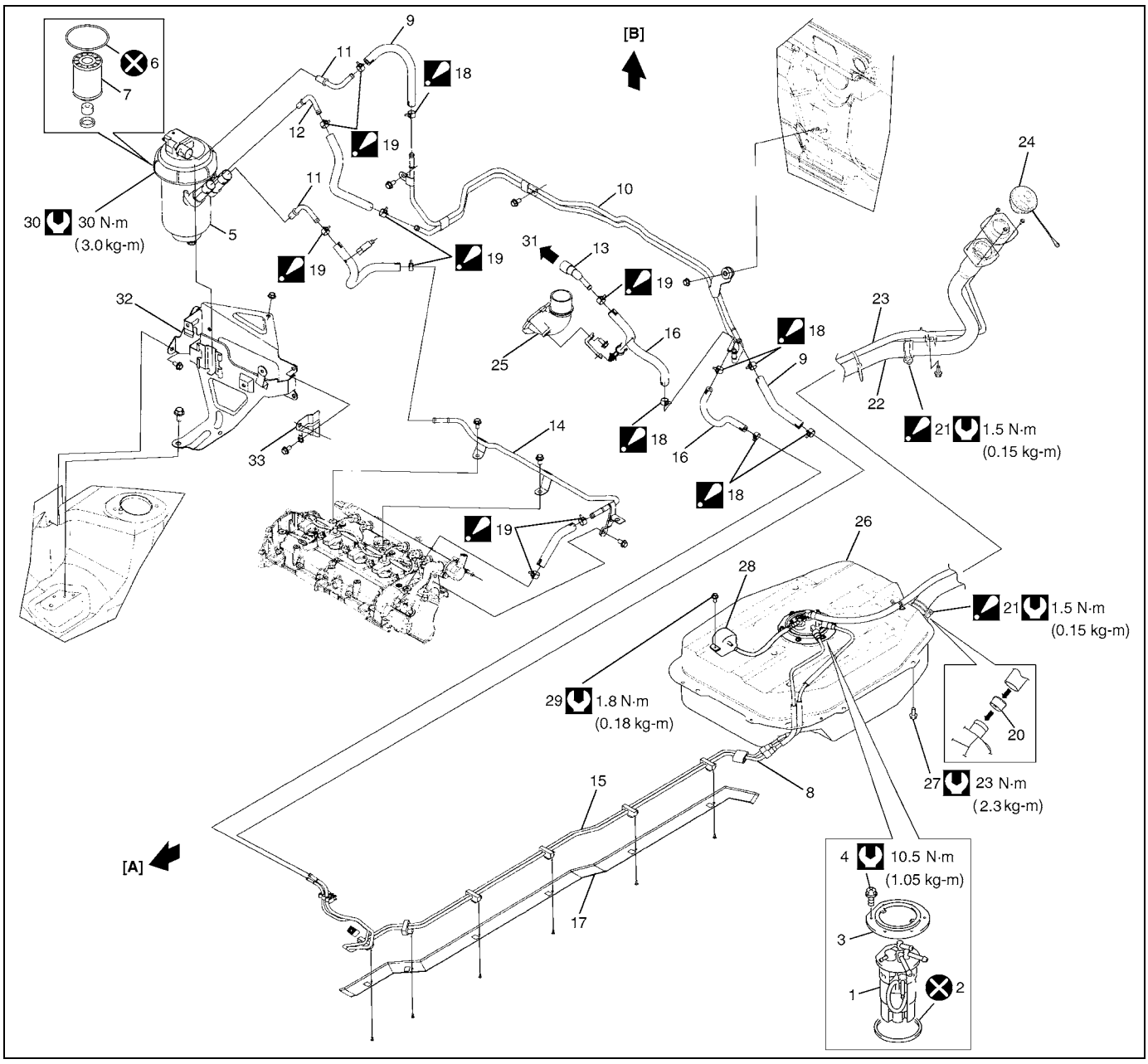

[A]: Forward	12. Fuel filter return joint	25. Air intake joint
[B]: Upward	13. Fuel return connector	26. Fuel tank
1. Fuel pump	14. Fuel No.2 pipe	27. Fuel tank bolt
2. Fuel pump plate gasket	15. Fuel return pipe	28. Fuel and vapor separator
3. Fuel pump plate	16. Fuel return hose	29. Fuel and vapor separator bolt
4. Fuel pump bolt	17. Fuel pipe cover	30. Fuel filter fastener
5. Fuel filter	18. Clip Be sure to position clip open end in forward direction as shown in figure.	31. To common rail
6. O-ring	19. Clip Be sure to position clip open end in upward direction as shown in figure.	32. Fuel filter bracket
7. Fuel filter element	20. Fuel tank inlet valve	33. Harness clamp bracket
8. Fuel feed pipe	21. Fuel filler hose clamp Be sure to position clamp screw in specified place as shown in figure.	Do not reuse.
9. Fuel feed hose	22. Fuel tank filler hose	Tightening torque
10. Fuel No.1 pipe	23. Breather hose	
11. Fuel filter joint	24. Fuel tank cap	

For RB413D

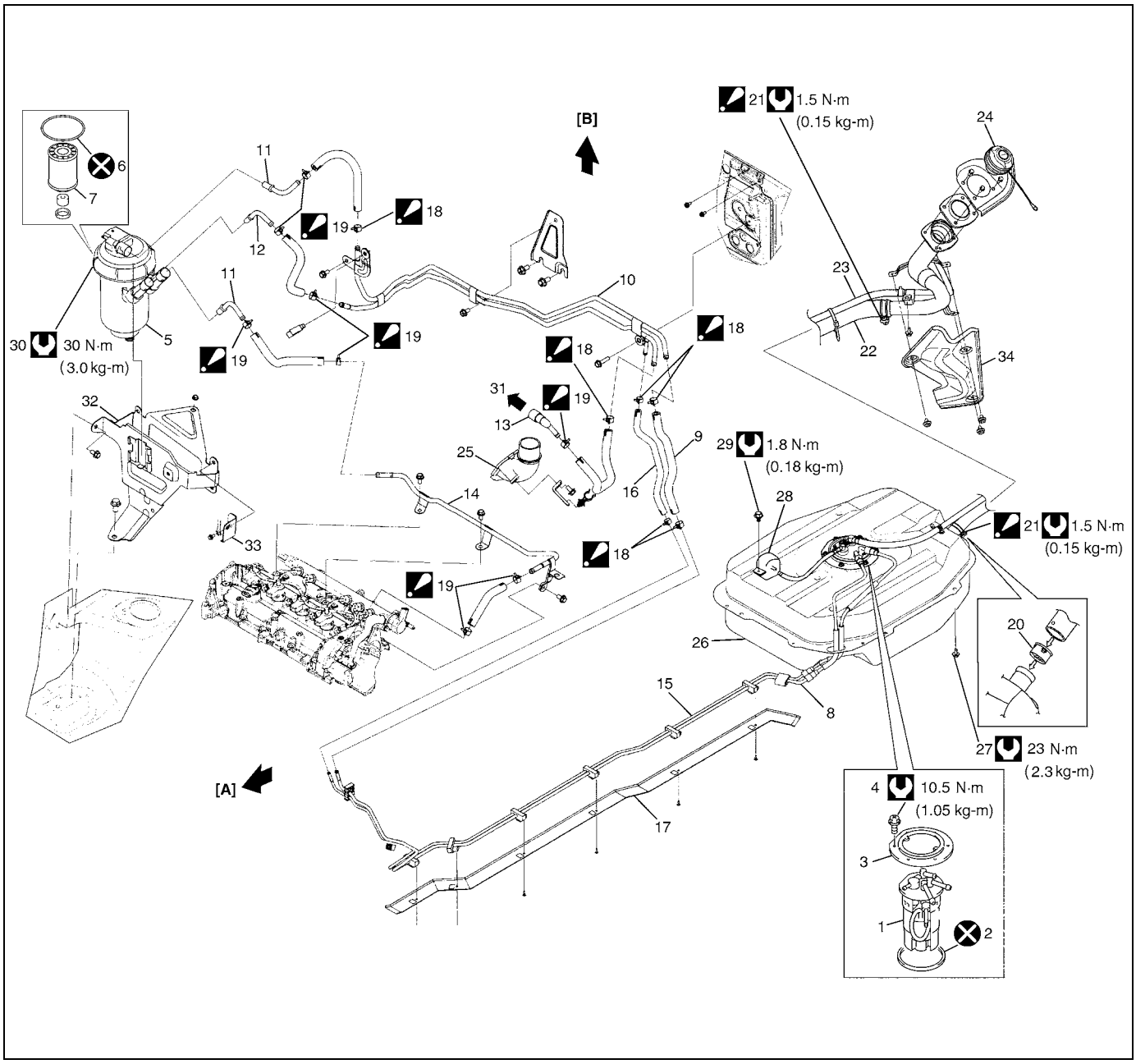

[A]: Forward	12. Fuel filter return joint	25. Air intake joint
[B]: Upward	13. Fuel return connector	26. Fuel tank
1. Fuel pump	14. Fuel No.2 pipe	27. Fuel tank bolt
2. Fuel pump plate gasket	15. Fuel return pipe	28. Fuel and vapor separator
3. Fuel pump plate	16. Fuel return hose	29. Fuel and vapor separator bolt
4. Fuel pump bolt	17. Fuel pipe cover	30. Fuel filter fastener
5. Fuel filter	18. Clip Be sure to position clip open end in forward direction as shown in figure.	31. To common rail
6. O-ring	19. Clip Be sure to position clip open end in upward direction as shown in figure.	32. Fuel filter bracket
7. Fuel filter element	20. Fuel tank inlet valve	33. Harness clamp bracket
8. Fuel feed pipe	21. Fuel filler hose clamp Be sure to position clamp screw in specified place as shown in figure.	34. Fuel filler neck protector
9. Fuel feed hose	22. Fuel tank filler hose	Do not reuse.
10. Fuel No.1 pipe	23. Breather hose	Tightening torque
11. Fuel filter joint	24. Fuel tank cap	

Precautions

[A]

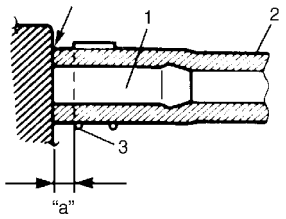

[B]

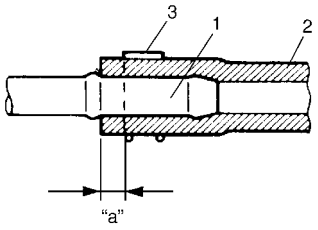

[C]

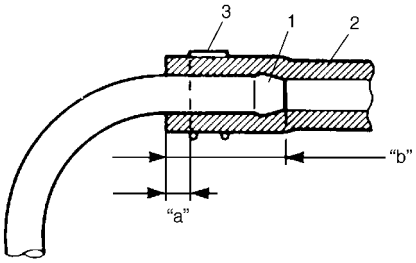

[D]

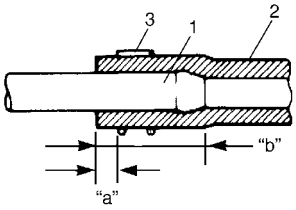

[E]

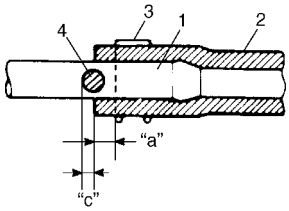

[F]

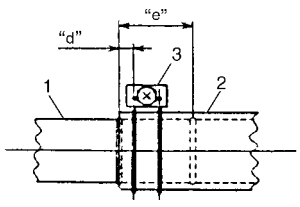

WARNING:

Before attempting service of any type on fuel system, the following should be always observed in order to reduce the risk or fire and personal injury.

- **Disconnect negative cable at battery.**
- **Do not smoke, and place no smoking signs near work area.**
- **Be sure to have CO_2 fire extinguisher handy.**
- **Be sure to perform work in a well-ventilated area and away from any open flames (such as gas hot heater).**
- **Wear safety glasses.**
- **To relieve fuel vapor pressure in fuel tank, remove fuel filler cap from fuel filler neck and then reinstall it.**
- **A small amount of fuel may be released after the fuel line is disconnected. In order to reduce the chance of personal injury, cover the fitting to be disconnected with a shop cloth. Be sure to put that cloth in an approved container when disconnection is completed.**
- **Note that fuel hose connection varies with each type of pipe. Be sure to connect and clamp each hose correctly referring to the figure.**
- **Before disconnecting a fuel hose or pipe, wait 60 seconds or more after engine stop to release pressure in fuel system.**
- **Do not expose removed fuel system parts to dust. Keep them always clean.**

[A]:	With short pipe, fit hose as far as it reaches pipe joint as shown.
[B]:	With the following type pipe, fit hose as far as its peripheral projection as shown.
[C]:	With bent pipe, fit hose as far as its bent part as shown or till depth "b".
[D]:	With straight pipe, fit hose till depth "b".
[E]:	With red marked pipe, fit hose end reaches red mark on pipe.
[F]:	For fuel tank filler hose, insert it to spool or welding-bead.
1.	Pipe
2.	Hose
3.	Clamp
4.	Red mark
"a":	Clamp securely at a position 3 – 7 mm (0.12 – 0.27 in.) from hose end.
"b":	20 – 30 mm (0.79 – 1.18 in.)
"c":	0 – 5 mm (0 – 0.19 in.)
"d":	5 – 12 mm (0.2 – 0.47 in)
"e":	40 mm (1.57 in)

Water Draining of Fuel Filter

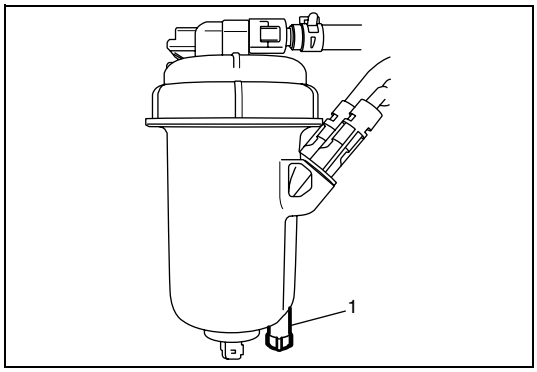

1) Disconnect negative cable at battery.
2) Place container under bleed screw (1), and drain fuel loosening it.
3) Tighten bleed screw.
4) Connect negative cable at battery.

Air Bleeding of Fuel System

Air bleeding must be carried out when fuel system has been disassembled or when vehicle ran out of fuel.
Turn ignition switch ON to operate fuel pump and after about 5 seconds turn it OFF. Repeat this 6 times and then check engine starts.

Fuel Line Inspection

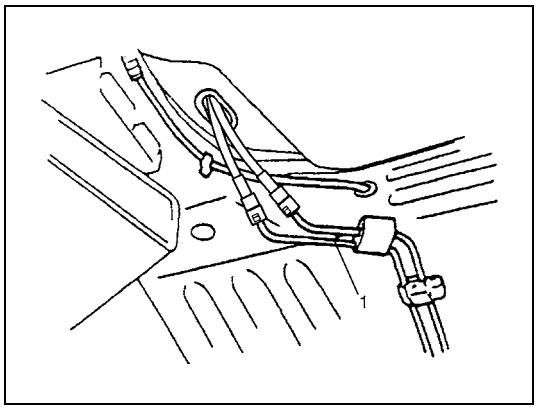

CAUTION:
Due to the fact that fuel feed line (1) is under high pressure, use special care when servicing it.

Visually inspect fuel lines for evidence of fuel leakage, hose crack and deterioration, or damage.
Make sure all clamps are secure.
Replace parts as needed.

Fuel Pipe Removal and Installation

WARNING:
A small amount of fuel may be released after disconnecting fuel hose. In order to reduce the chance of personal injury, cover hose and pipe to be disconnected with a shop cloth.
Be sure to put that cloth in an approved container when disconnection is completed.

Removal

1) Disconnect negative cable at battery.

2) Remove steering gear case assembly. Refer to “Steering Gear Case Removal and Installation” for RM413D or “Manual Rack and Pinion Assembly (Steering Gear Case)” for RB413D in Section 3B.

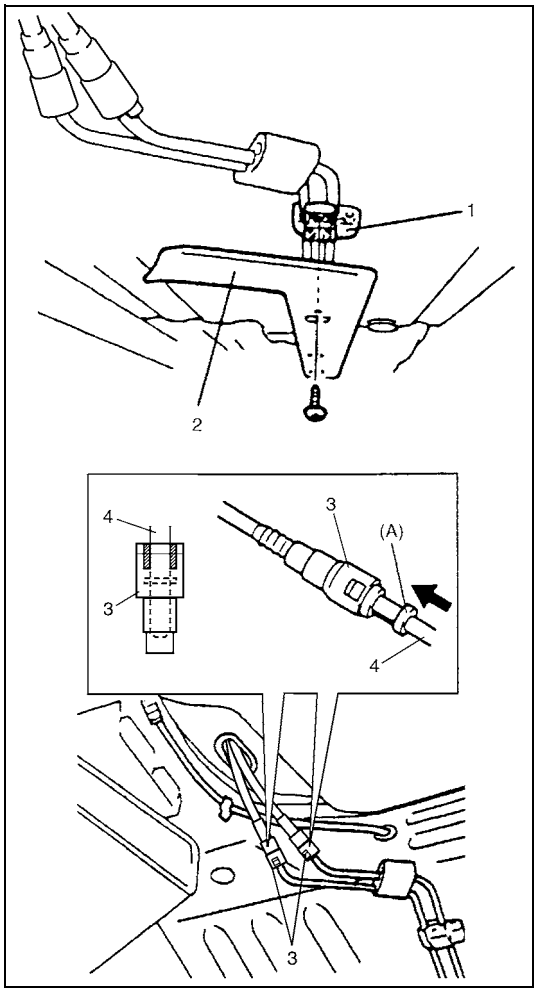

3) Remove pipe cover (2) from vehicle.
4) Disconnect fuel pipe joint and fuel hose from fuel pipe at the front and rear of each fuel pipe.
   For quick joint (3), disconnect it as follows:
   a) Remove mud, dust and/or foreign material between pipe (4) and joint by blowing compressed air.
   b) Unlock joint lock by inserting special tool between pipe and joint.

Special tool
(A): 09919-47020

   c) Disconnect joint (3) from pipe (4).

1. Clamp

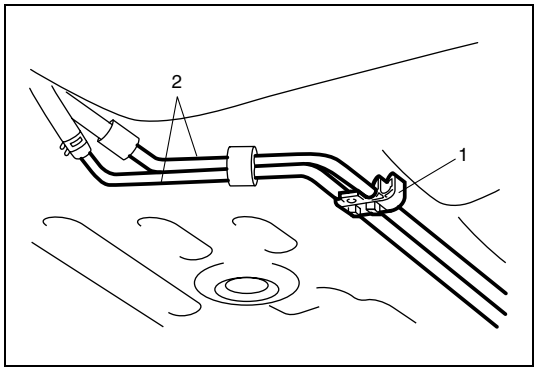

5) Mark the location of clamps (1) on fuel pipes (2), so that the clamps can be reinstalled to where they were.
6) Remove pipes (2) with clamp (1) from vehicle.
7) Remove clamp (1) from pipes (2).

Installation

1) Install clamps to marked location on pipes. If clamp is deformed or its claw is bent or broken, replace it with new one.
2) Install pipes with pipe clamps to vehicle.

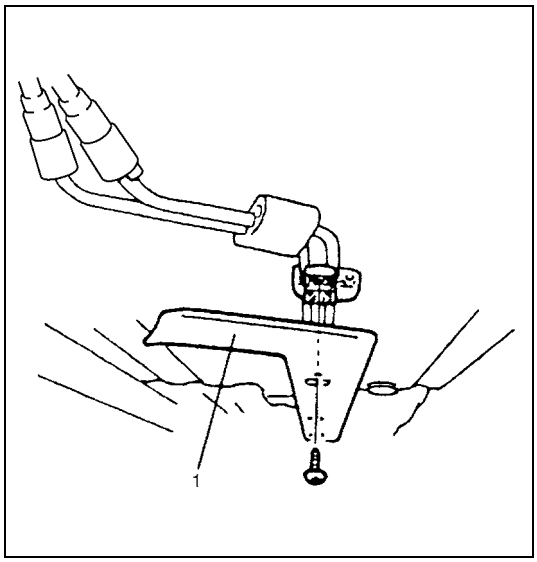

3) Connect fuel hoses and pipes to each pipe.

CAUTION:
When connecting joint, clean outside surfaces of pipe where joint is to be inserted, push joint into pipe till joint lock clicks and check to ensure that pipes are connected securely, or fuel leak may occur.

4) Install pipe cover (1) to vehicle.
5) Install steering gear case referring to "Steering Gear Case Removal and Installation" for RM413D or "Manual Rack and Pinion Assembly (Steering Gear Case)" for RB413D in Section 3B.
6) With engine OFF, turn ignition switch to ON position and check for fuel leaks.

Fuel Filler Cap Inspection

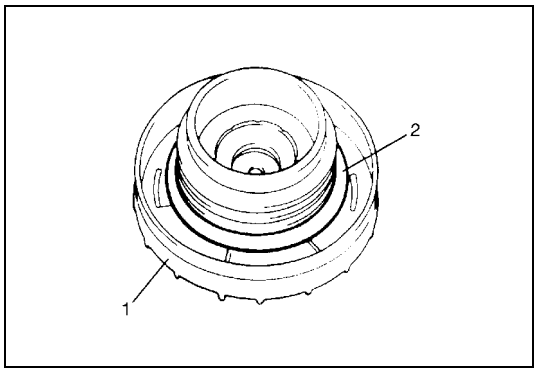

Remove cap (1), and check gasket for even filler neck imprint, and deterioration or any damage. If gasket (2) is in malcondition, replace cap.

NOTE:
If cap requires replacement, only a cap with the same features should be used. Failure to use correct cap can result in critical malfunction of system.

Fuel Tank Inlet Valve Removal and Installation

WARNING:
Before starting the following procedure, be sure to observe "Precautions" in this section.

Removal

1) Remove fuel filler cap.

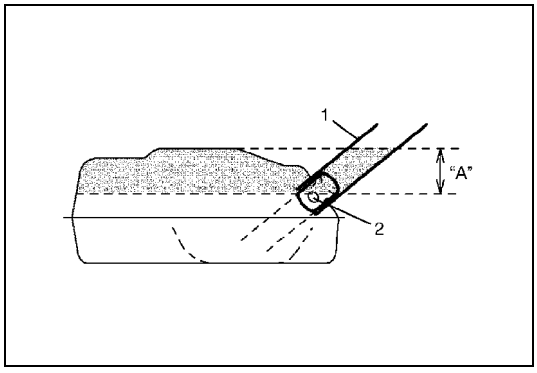

2) Insert hose of a hand operated pump into fuel filler hose (1) and drain fuel in space "A" in the figure.

CAUTION:
Do not force pump hose into fuel tank, or pump hose may damage fuel tank inlet valve (2).

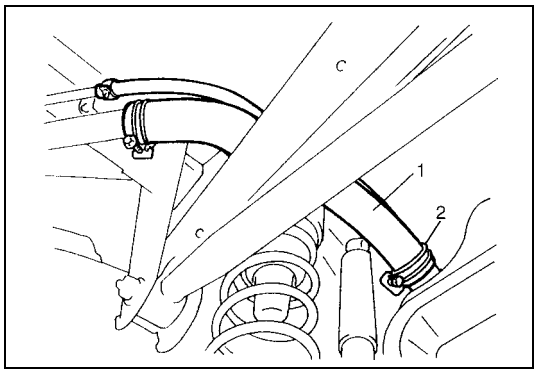

3) Hoist vehicle, and remove clamp (2) and fuel filler hose (1) from fuel tank.

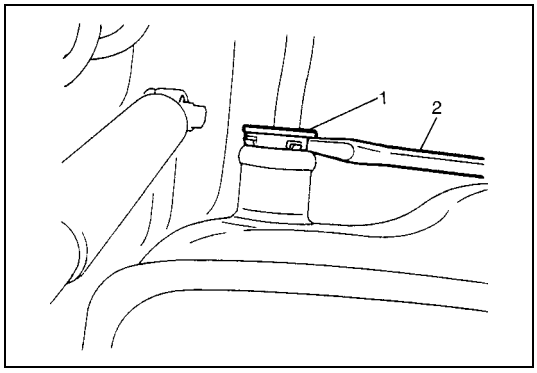

4) Remove fuel tank inlet valve (1) using flat head rod (2) or the like.

CAUTION:
Be careful not to damage fuel tank inlet valve (1) with flat head rod (2) or the like.

Installation

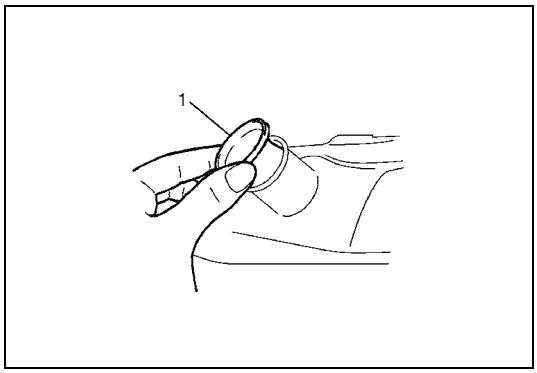

1) Install fuel tank inlet valve (1) to fuel tank.

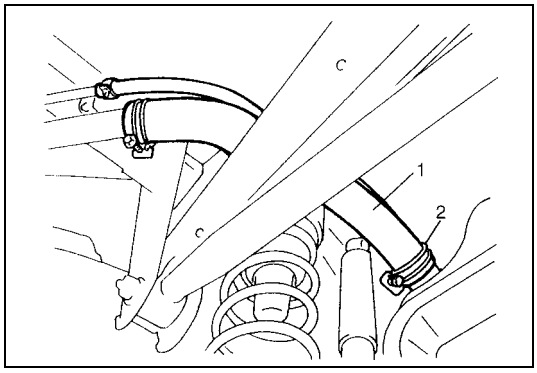

2) Install fuel filler hose (1) to fuel tank and secure it with clamp (2).
   For proper installation, refer to “Fuel System Components” in this section.
3) Lower vehicle and install fuel filler cap.

Fuel Tank Inlet Valve Inspection

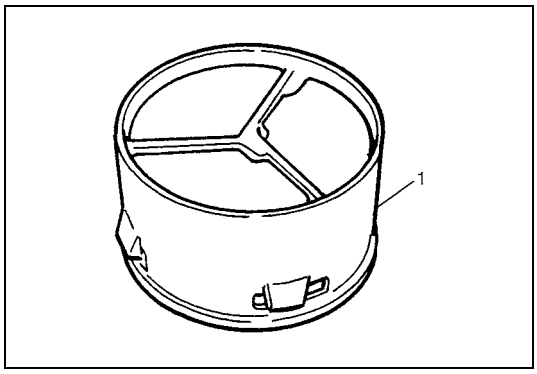

Check fuel tank inlet valve (1) for the following.
- Damage
- Smooth opening and closing

If any damage or malfunction is found, replace.

Fuel Tank Removal and Installation

Removal

WARNING:
- **Before starting the following procedure, be sure to observe "Precautions" in this section.**
- **A small amount of fuel may be released after the fuel hose is disconnected. In order to reduce the chance of personal injury, cover the hose and pipe to be disconnected with a shop cloth. Be sure to put that cloth in an approved container when disconnection is completed.**

1) Disconnect negative cable at battery.
2) Hoist vehicle.

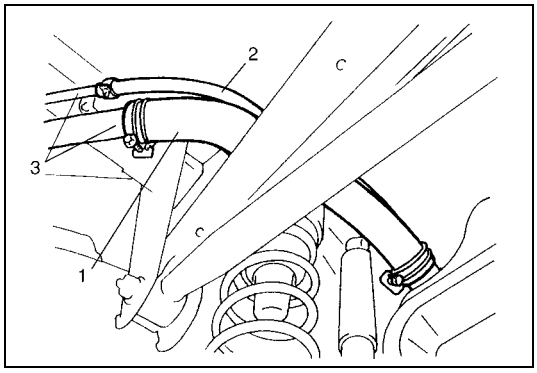

3) Disconnect fuel filler hose (1) and breather hose (2) from filler neck (3).

CAUTION:
Never disconnect fuel filler hose (1) from fuel tank inlet. If half or more of fuel is remaining to fuel tank, fuel over flows in this case and come out.

4) Due to absence of fuel tank drain plug, drain fuel tank by pumping fuel out through fuel tank filler.
   Use hand operated pump device to drain fuel tank.

CAUTION:
- **Do not force pump hose into fuel tank, or pump hose may damage fuel tank inlet valve.**
- **Never drain or store fuel in an open container due to possibility of fire or explosion.**

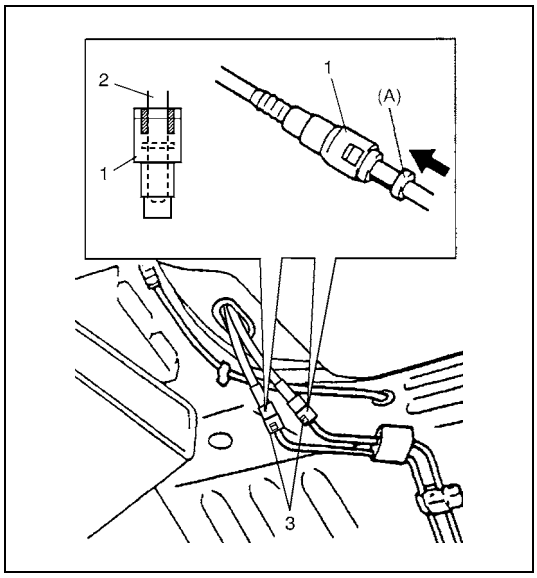

5) Disconnect fuel pipe joints from pipes.
   For quick joint (1), disconnect it as follows:
   a) Remove mud, dust and/or foreign material between pipe (2) and joint by blowing compressed air.
   b) Unlock joint (1) lock by inserting special tool between pipe (2) and joint (1).

Special tool
(A): 09919-47020

   c) Disconnect joint from pipe.

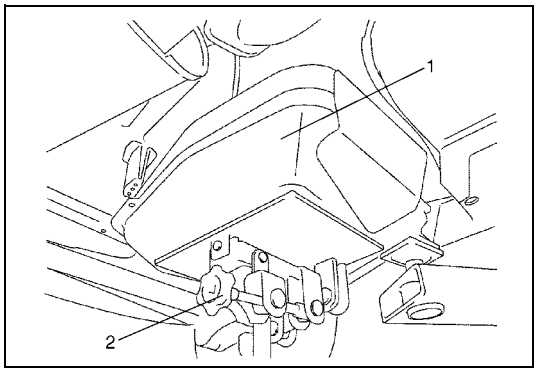

6) Support fuel tank (1) with jack (2) and remove its mounting bolts.

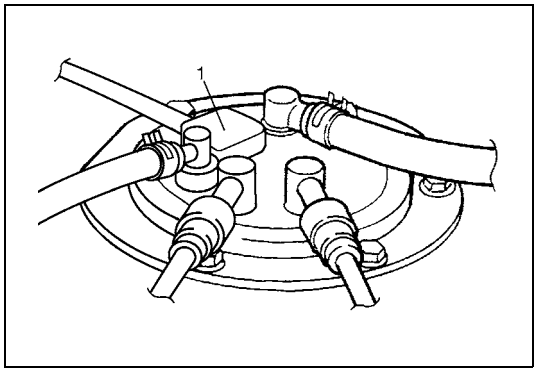

7) Lower fuel tank a little as to disconnect wire harness at connector (1), then remove fuel tank.

Installation

CAUTION:
- **When connecting joint, clean outside surfaces of pipe where joint is to be inserted, push joint into pipe till joint lock clicks and check to ensure that pipes are connected securely, or fuel leak may occur.**
- **Never let the fuel hoses touch the ABS sensor harness (if equipped).**

1) If parts have been removed from fuel tank, install them before installing fuel tank to vehicle.

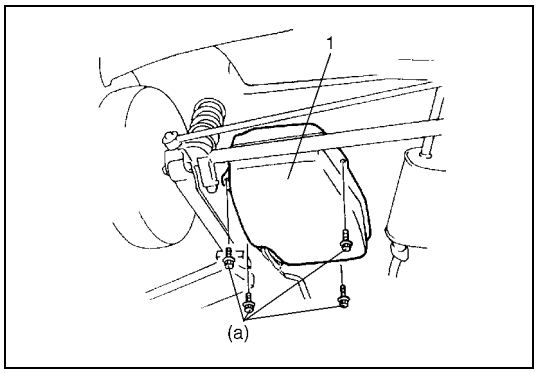

2) Raise fuel tank (1) with jack and connect connector of fuel pump and gauge and clamp wire harness.
3) Install fuel tank (1) to vehicle.

Tightening torque
Fuel tank bolt (a): 23 N·m (2.3 kg-m, 17.0 lb-ft)

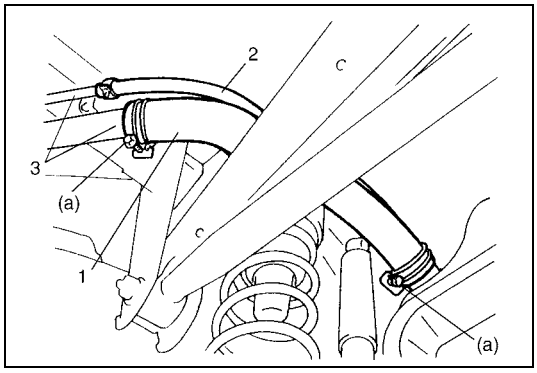

4) Connect fuel filler hose (1) and breather hose (2) to filler neck (3) as shown in figure and clamp them securely.

Tightening torque
Fuel filler hose clamp bolt
(a): 1.5 N·m (0.15 kg-m, 1.0 lb-ft)

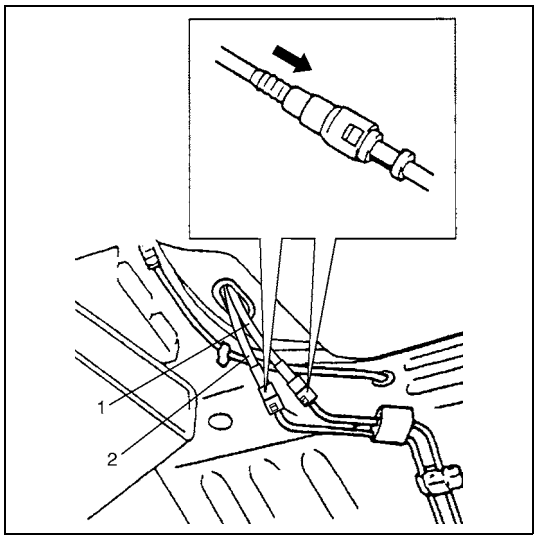

5) Connect fuel return hose (1) and fuel feed hose (2) to each pipe as shown in figure and clamp them securely.
6) Connect negative cable at battery.
   With engine OFF, turn ignition switch to ON position and check for fuel leaks.

Fuel Tank Inspection

After removing fuel tank, check hoses and pipes connected to fuel tank for leaks, loose connections, deterioration or damage. Also check fuel pump assembly gaskets for leaks, visually inspect fuel tank for leaks and damage.
Replace any damaged or malconditioned parts.

Fuel Tank Purging Procedure

WARNING:

This purging procedure will not remove all fuel vapor. Do not attempt any repair on tank using heat of flame as an explosion resulting in personal injury could occur.

CAUTION:

Never remain water in fuel tank after washing, or fuel tank inside will get corrosion.

The following procedure are used for purging fuel tank.

1) After removing fuel tank, remove all hoses, pipes and fuel pump assembly from fuel tank.
2) Drain all remaining fuel from tank.
3) Place fuel tank to flushing area.
4) Fill tank with warm water or tap water, and agitate vigorously and drain. Repeat this washing until inside of tank is clean. Replace tank if its inside is rusty.
5) Completely flush out remaining water after washing.

Fuel Pump Assembly Removal and Installation

WARNING:

Before starting the following procedure, be sure to observe "Precautions" in this section.

CAUTION:

Do not disassemble fuel pump assembly. Disassembly will spoil its original performance.

Removal

1) Remove fuel tank from vehicle referring to "Fuel Tank Removal and Installation" in this section.

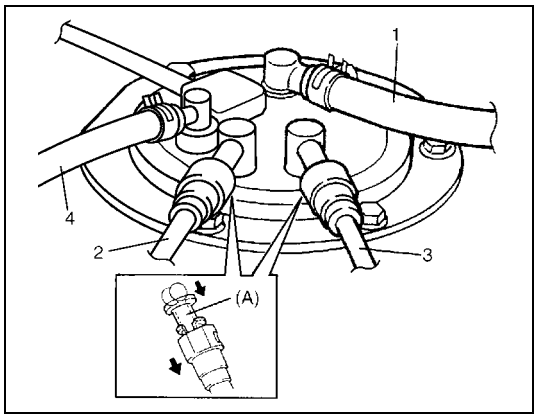

2) Disconnect fuel breather hose (1), fuel return pipe (2), fuel feed pipe (3) and fuel vapor hose (4) from fuel pump assembly.
   When disconnecting joints of fuel feed line from each pipe of fuel pump, unlock joint by inserting special tool between pipe and joint lock first.

Special tool
(A): 09919-47020

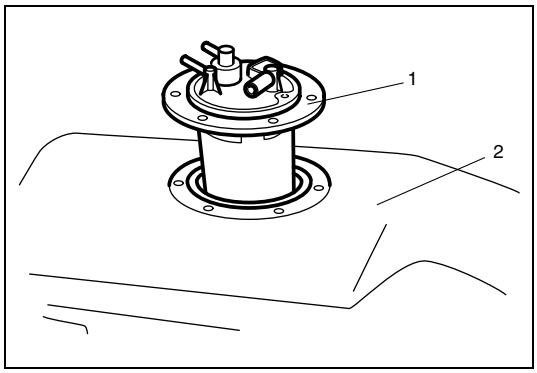

3) Remove fuel pump assembly (1) from fuel tank (2).

Installation

CAUTION:
When connecting joint, clean outside surface of pipe where joint is to be inserted, push joint into pipe till joint lock clicks and check to ensure that pipes are connected securely, or fuel leak may occur.

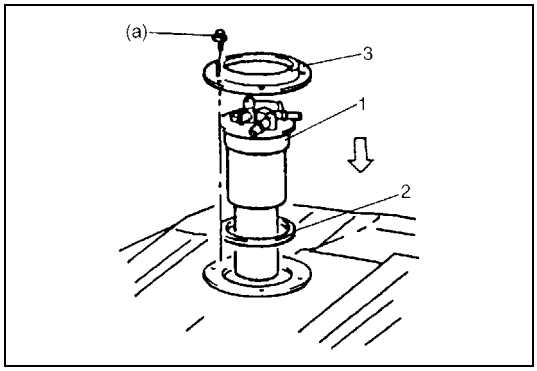

1) Clean mating surfaces of fuel pump assembly (1) and fuel tank.
2) Install new gasket (2) and plate (3) to fuel pump assembly (1) then install fuel pump assembly to fuel tank.

Tightening torque
Fuel pump bolt (a): 10.5 N·m (1.05 kg-m, 7.5 lb-ft)

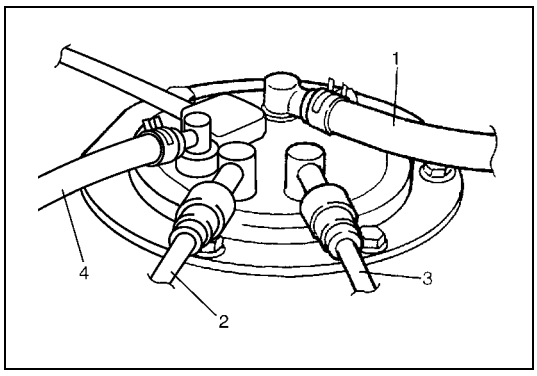

3) Connect fuel breather hose (1), fuel return pipe (2) and fuel feed pipe (3) and fuel vapor hose (4) to fuel pump assembly.
4) Install fuel tank to vehicle referring to “Fuel Tank Removal and Installation” in this section.

Fuel Pump Inspection

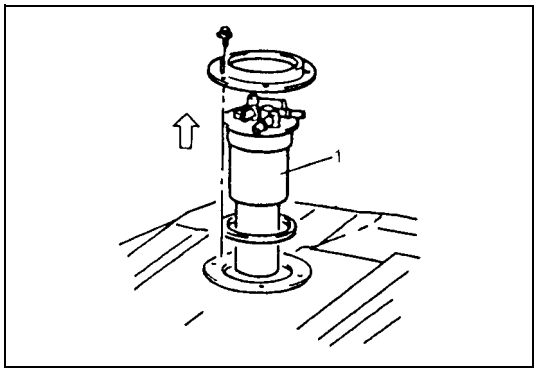

- Check fuel pump assembly for damage.
- Check fuel suction filter (1) for evidence of dirt and contamination.
  If present, replace or clean and check for presence of dirt in fuel tank.
- For inspection of fuel level gauge, refer to “Fuel Level Sensor (Gauge Unit) Inspection” in Section 8C.

Fuel Filter Element Removal and Installation

Removal

1) Disconnect negative cable at battery.
2) Place container under bleed screw (1), and drain fuel loosening bleed screw.

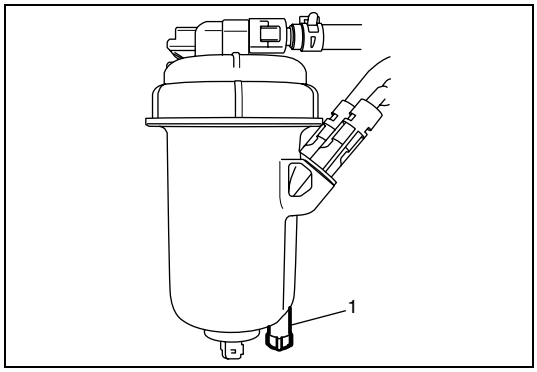

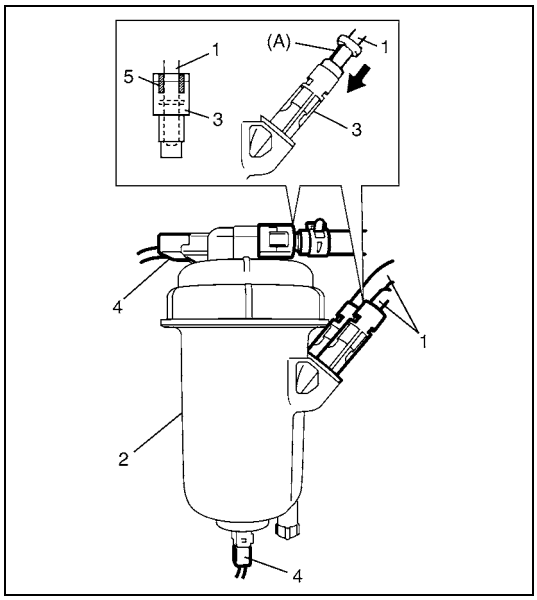

3) Disconnect fuel filter joint (1) from fuel filter (2).
   For quick joint (3), disconnect it as follows:
   a) Remove mud, dust and/or foreign material from clearance (5) between fuel filter joint (1) and quick joint by blowing compressed air.
   b) Unlock quick joint lock by inserting special tool between fuel filter joint and quick joint.

   Special tool
   (A): 09919-47020

   c) Disconnect fuel filter joint (1) from fuel filter.
4) Disconnect couplers (4) from fuel filter.

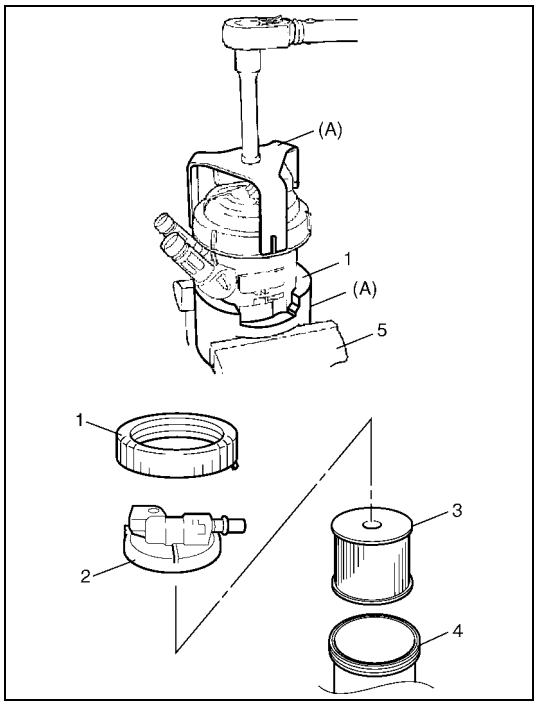

5) Turning fuel filter fastener (1) counterclockwise, remove fuel filter fastener (1) from fuel filter case (4) using special tool and vise (5).

Special tool
(A): 09919-48610

6) Remove fuel filter cap (2) and fuel filter element (3).

Installation

Reverse removal procedure for installation noting the following.

- Be sure to replace fuel filter element and O-ring as new one.
- Clean fuel filter case as follows.

a) Place container under bleed screw, and drain fuel loosing bleed screw.
b) Tighten bleed screw.
c) Remove fuel filter case.
d) Pour diesel substitute (kerdane, diltine or paraffin) into fuel filter case.
e) Clean fuel filter case with brush.
f) Dry and wipe out fuel filter case.

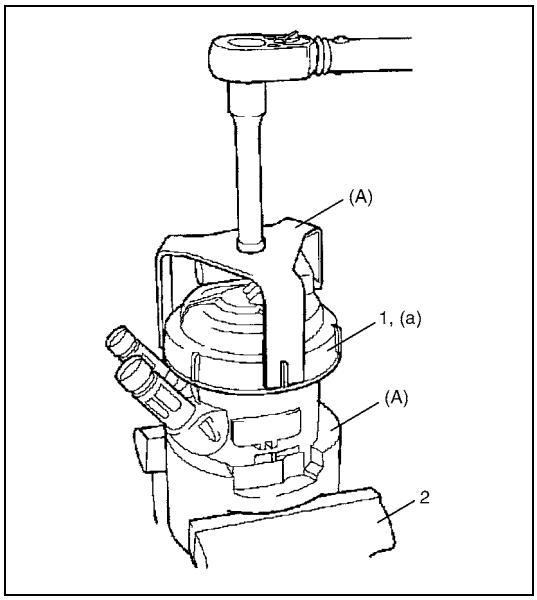

- Tighten fuel filter fastener (1) to specified torque using special tool and vise (2).

Special tool
(A): 09919-48610

Tightening torque
Fuel filter fastener
(a): 30 N·m (3.0 kg-m, 22.0 lb-ft)

- Bleed air in system referring to “Air Bleeding of Fuel System” in this section.
- Start engine and check that there are no fuel leakage.

Fuel Filter Assembly Removal and Installation

Removal

1) Disconnect fuel pipes in the same manner as step 1) through 4) of “Removal” under “Fuel Filter Element Removal and Installation” in this section.
2) Remove fuel filter assembly.

Installation

Reverse removal procedure for installation noting the following.

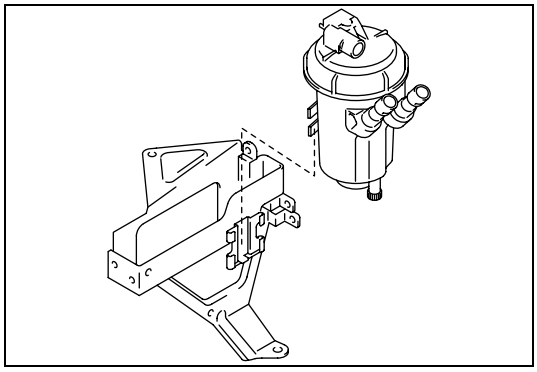

- Bleed air in system referring to “Air Bleeding of Fuel System” in this section.
- Start engine and check that there are no fuel leakage.

Special Tool

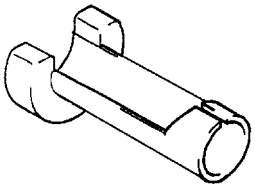	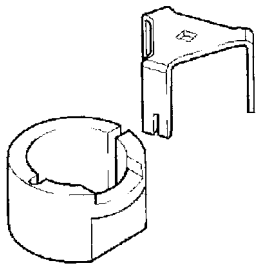
09919-47020 Quick joint remover	09919-48610 (EN-46784) Fuel filter locking tool

Tightening Torque Specification

Fastening part	Tightening torque		
	N•m	kg-m	lb-ft
Fuel pump bolt	10.5	1.05	7.5
Fuel tank bolt	23	2.3	17.0
Fuel filler hose clamp bolt	1.5	0.15	1.1
Separator screw	1.8	0.18	1.3

Fastening part	Tightening torque		
	N•m	kg-m	lb-ft
Fuel filter fastener	30	3.0	21.5

SECTION 6E3

ENGINE AND EMISSION CONTROL SYSTEM (Z13DT ENGINE)

WARNING:

For vehicles equipped with a Supplemental Restraint (Air Bag) System:

- **Service on and around the air bag system components or wiring must be performed only by an authorized SUZUKI dealer. Refer to "System Components and Wiring Location View and Connectors" under "General Description" in Section 10B in order to confirm whether you are performing service on or near the air bag system components or wiring. Please observe all WARNINGS and "Service Precautions" under "On-Vehicle Service" in Section 10B before performing service on or around the air bag system components or wiring. Failure to follow WARNINGS could result in unintentional activation of the system or could render the system inoperative. Either of these two conditions may result in severe injury.**
- **Technical service work must be started at least 90 seconds after the ignition switch is turned to the "LOCK" position and the negative cable is disconnected from the battery. Otherwise, the system may be activated by reserve energy in the Sensing and Diagnostic Module (SDM).**

CONTENTS

General Description 6E3-3
- System Diagram 6E3-3
- Electronic Control System 6E3-4
  - System location diagram 6E3-4
  - System wiring diagram for RM413D 6E3-5
  - System wiring diagram for RB413D 6E3-8
- Air Intake System 6E3-11
- Fuel Delivery System 6E3-12

On-Vehicle Service 6E3-13
- Idle Speed Inspection 6E3-13
- Air Intake System 6E3-13
  - Vacuum pump removal and installation 6E3-13
- Fuel Delivery System 6E3-15
  - Precautions 6E3-15
  - Fuel delivery system components 6E3-16
  - Fuel leakage check 6E3-17
  - Fuel pump on-vehicle inspection 6E3-17
  - Fuel pump removal and installation 6E3-17
  - Fuel pump inspection 6E3-17
  - Fuel injector on-vehicle inspection 6E3-18
  - Fuel injector removal and installation 6E3-18
  - Common rail (High pressure fuel injection rail) removal and installation 6E3-21
  - Injection pump removal and installation 6E3-23
- Electronic Control System 6E3-25
  - Engine control module (ECM) removal and installation 6E3-25
  - ECM registration 6E3-27
  - Registration data check 6E3-28
  - Mass air flow (MAF) and intake air temperature (IAT) sensor removal and installation 6E3-29
  - Glow plug removal and installation 6E3-30
  - Pedal position sensor removal and installation 6E3-31
  - Fuel heater and temperature sensor removal and installation 6E3-32
  - Fuel temperature sensor inspection 6E3-32
  - Fuel pressure sensor removal and installation 6E3-32
  - Fuel pressure regulator removal and installation 6E3-33
  - Fuel pressure regulator inspection 6E3-34
  - Engine coolant temperature sensor (ECT sensor) removal and installation 6E3-34
  - Engine coolant temperature sensor (ECT sensor) inspection 6E3-35
  - Camshaft position sensor (CMP sensor) removal and installation 6E3-36

Crankshaft position (CKP) sensor (engine speed sensor) removal and installation 6E3-37
Crankshaft position (CKP) sensor (engine speed sensor) inspection 6E3-37
Engine oil level switch removal and installation 6E3-38
Engine oil level switch inspection 6E3-38
Boost pressure sensor removal and installation 6E3-39
Radiator fan control system inspection 6E3-39
Fuel pump relay and radiator fan relay 1, 2, 3 inspection 6E3-40
Main relay and fuel heating relay inspection 6E3-40
Glow controller removal and installation 6E3-41
EGR System 6E3-42
EGR valve assembly component 6E3-42
EGR valve assembly removal and installation 6E3-43
Required Service Material 6E3-45
Tightening Torque Specification 6E3-45
Special Tool 6E3-46

General Description

System Diagram

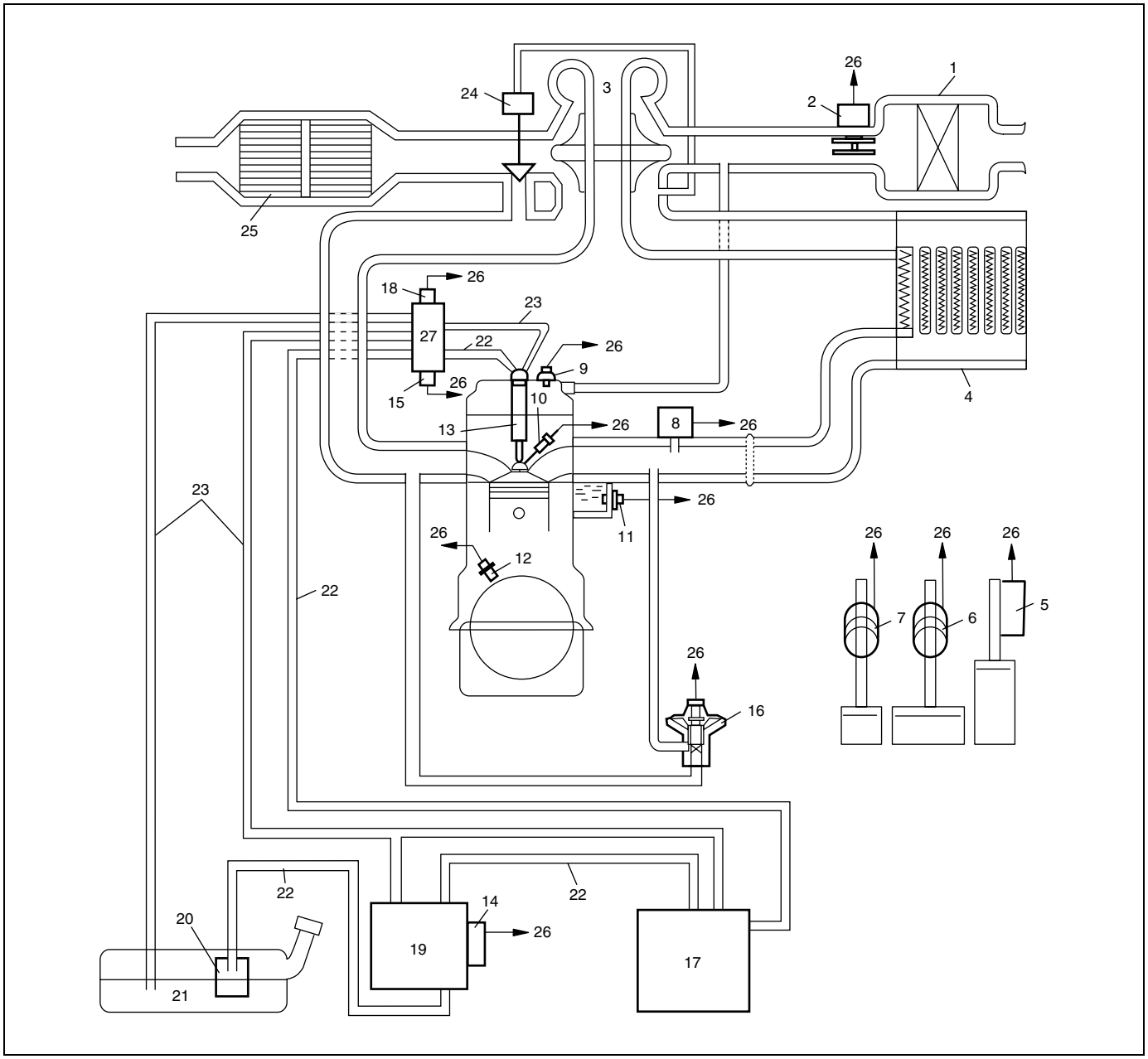

1. Air Cleaner	10. Glow plug	19. Fuel filter
2. MAF and IAT sensor	11. ECT sensor	20. Fuel pump
3. Turbocharger	12. CKP sensor (Engine speed sensor)	21. Fuel tank
4. Intercooler	13. Fuel injector	22. Fuel feed line
5. PPS (Pedal position sensor)	14. Fuel heater and temperature sensor	23. Fuel return line
6. Brake switch	15. Fuel pressure sensor	24. Waste gate actuator
7. Clutch switch	16. EGR valve	25. Catalytic converter
8. Boost pressure sensor	17. Injection pump	26. To ECM
9. CMP sensor	18. Fuel pressure regulator	27. Common rail (High pressure fuel injection rail)

Electronic Control System

System location diagram

NOTE:

For RB413D, check for installation position of each relay referring to "Wiring Diagram Manual" described in "Foreword" of this manual.

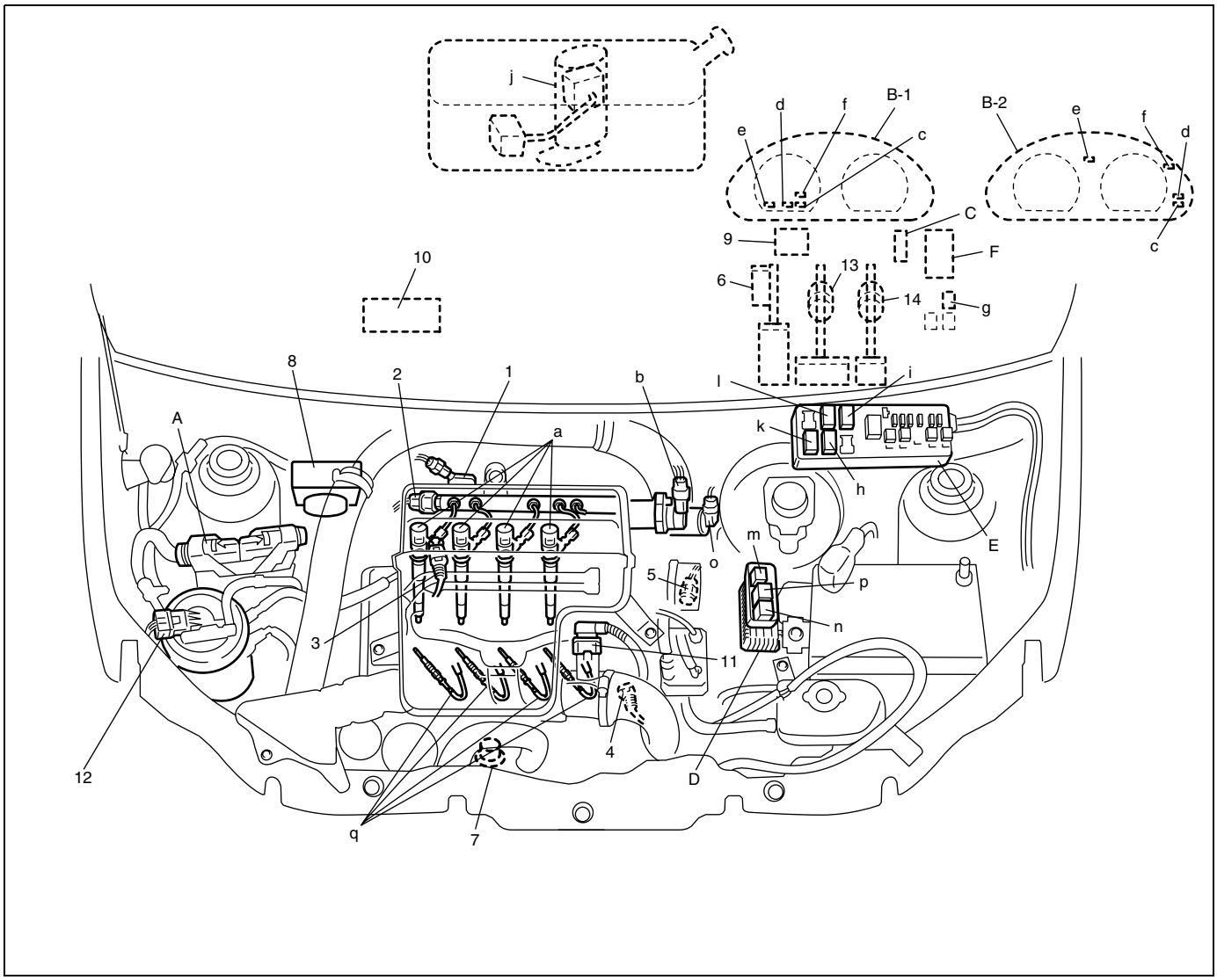

INFORMATION SENSORS	CONTROLLED DEVICES	OTHERS
1. Boost pressure sensor	a: Fuel injector	A: ECM
2. Fuel pressure sensor	b: Fuel pressure regulator	B-1: Combination meter for RM413D
3. CMP sensor	c: Malfunction indicator lamp	B-2: Combination meter for RB413D
4. CKP sensor	d: Service vehicle soon lamp	C: Data link connector
5. ECT sensor	e: Glow indicator lamp	D: Glow controller
6. Pedal position sensor	f: Oil level indicator lamp	E: Main fuse box
7. Oil level switch	g: A/C relay (if equipped) for RM413D	F: Circuit fuse box
8. ABS control module	h: A/C compressor relay (if equipped)	
9. Immobilizer control module	i: Fuel pump relay	
10. A/C control module	j: Fuel pump	
11. MAF and IAT sensor	k: Radiator fan relay 1	
12. Fuel heater and temperature sensor	l: Radiator fan relay 2	
13. Brake switch	m: Radiator fan relay 3	
14. Clutch switch	n: Main relay	
	o: EGR valve	
	p: Fuel heating relay	
	q: Glow plug	

System wiring diagram for RM413D

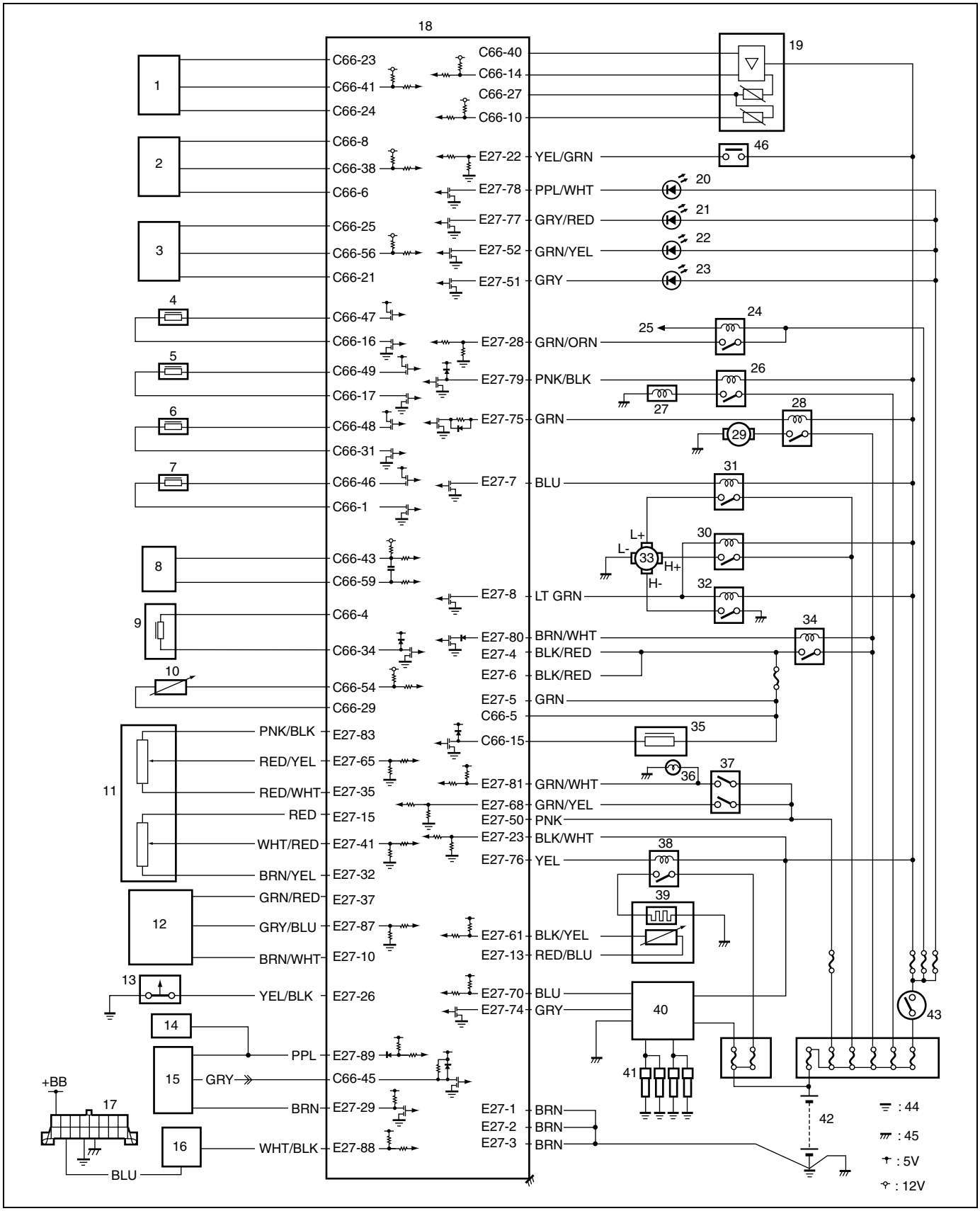

1. Boost pressure sensor	17. Data link connector	33. Radiator cooling fan motor
2. Fuel pressure sensor	18. ECM	34. Main relay
3. CMP sensor	19. MAF and IAT sensor	35. EGR valve
4. Fuel injector No.1	20. Malfunction indicator lamp	36. Brake lamp
5. Fuel injector No.2	21. Service vehicle soon lamp	37. Brake switch
6. Fuel injector No.3	22. Glow indicator lamp	38. Fuel heating relay
7. Fuel injector No.4	23. Oil level indicator lamp	39. Fuel heater and temperature sensor
8. CKP sensor	24. A/C relay (if equipped)	40. Glow controller
9. Fuel pressure regulator	25. To A/C switch (if equipped)	41. Glow plug
10. ECT sensor	26. Compressor relay (if equipped)	42. Battery
11. Pedal position sensor	27. A/C compressor (if equipped)	43. Ignition switch
12. A/C pressure sensor (if equipped)	28. Fuel pump relay	44. Engine ground
13. Oil level switch	29. Fuel pump	45. Vehicle body ground
14. ABS control module	30. Radiator fan relay 1	46. Clutch switch
15. Combination meter	31. Radiator fan relay 2	
16. Immobilizer control module	32. Radiator fan relay 3	

ECM Connector (Terminal Arrangement Viewed from Harness Side)

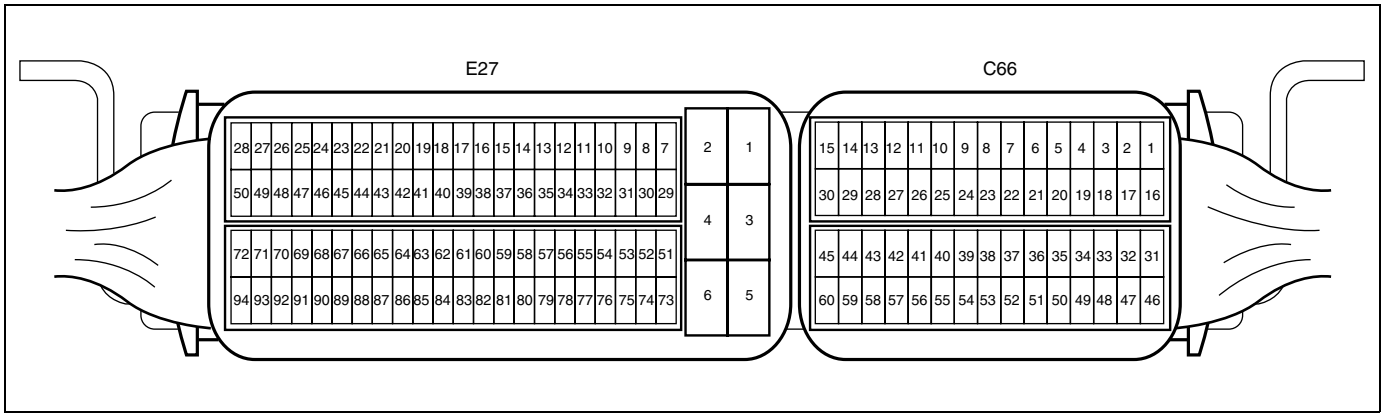

TERMINAL		CIRCUIT
C66	1	Fuel injector No.4 output (low side)
	2	–
	3	–
	4	Output of 12 V power source for fuel pressure regulator
	5	Main power supply
	6	Ground for fuel pressure sensor
	7	–
	8	Output of 5 V power source for fuel pressure sensor
	9	–
	10	Intake air temperature sensor signal
	11	–
	12	–
	13	–
	14	MAF sensor signal
	15	EGR valve output
	16	Fuel injector No.1 output (low side)
	17	Fuel injector No.2 output (low side)
	18	–
	19	–
	20	–
	21	Ground for CMP sensor
	22	–
	23	Output of 5 V power source for boost pressure sensor
	24	Ground for boost pressure sensor
	25	Output of 5 V power source for CMP sensor
	26	–
	27	Ground for MAF and IAT sensor
	28	–
	29	Ground for ECT sensor
	30	–
	31	Fuel injector No.3 output (low side)
	32	–
	33	–
	34	Fuel pressure regulator signal
	35	–
	36	–
	37	–
	38	Fuel pressure sensor signal
	39	–
	40	Output of 5 V power source for MAF and IAT sensor
	41	Boost pressure sensor signal
	42	–
	43	CKP sensor signal (+)
	44	–
	45	Engine coolant temperature signal for combination meter
	46	Fuel injector No.4 output (high side)
	47	Fuel injector No.1 output (high side)
	48	Fuel injector No.3 output (high side)
	49	Fuel injector No.2 output (high side)
	50	–
	51	–

TERMINAL		CIRCUIT
C66	52	–
	53	–
	54	ECT sensor signal
	55	–
	56	CMP sensor signal
	57	–
	58	–
	59	CKP sensor signal (–)
	60	–
E27	1	Ground for ECM
	2	Ground for ECM
	3	Ground for ECM
	4	Main power supply
	5	Main power supply
	6	Main power supply
	7	Radiator fan relay 2 output
	8	Radiator fan relay 1 output
	9	–
	10	Ground for A/C pressure sensor
	11	–
	12	–
	13	Ground for fuel temperature sensor
	14	–
	15	Output of 5 V power source for pedal position sensor (PPS2)
	16	–
	17	–
	18	–
	19	–
	20	–
	21	–
	22	Clutch switch signal
	23	Ignition switch signal
	24	–
	25	–
	26	Oil level switch signal
	27	–
	28	A/C relay signal
	29	Engine revolution signal for combination meter
	30	–
	31	–
	32	Ground for pedal position sensor (PPS2)
	33	–
	34	–
	35	Ground for pedal position sensor (PPS1)
	36	–
	37	Output of 5 V power source for A/C pressure sensor
	38	–
	39	–
	40	–
	41	Pedal position sensor (PPS2) signal
	42	–
	43	–
	44	–

TERMINAL		CIRCUIT
E27	45	–
	46	–
	47	–
	48	–
	49	–
	50	Power source for ECM
	51	Oil level indicator lamp
	52	Glow indicator lamp
	53	–
	54	–
	55	–
	56	–
	57	–
	58	–
	59	–
	60	–
	61	Fuel temperature sensor signal
	62	–
	63	–
	64	–
	65	Pedal position sensor (PPS1) signal
	66	–
	67	–
	68	Brake switch signal
	69	–
	70	Glow controller input signal
	71	–
	72	–
	73	–
	74	Glow controller output signal
	75	Fuel pump relay output
	76	Fuel heating relay output
	77	Service vehicle soon lamp
	78	Malfunction indicator lamp
	79	Compressor relay output
	80	Main power supply relay output
	81	Brake switch signal for brake lamp
	82	–
	83	Output of 5 V power source for pedal position sensor (PPS1)
	84	–
	85	–
	86	–
	87	A/C pressure sensor signal
	88	Serial communication line of data link connector 12 V
	89	ABS control module signal (vehicle speed sensor signal)
	90	–
	91	–
	92	–
	93	–
	94	–

System wiring diagram for RB413D

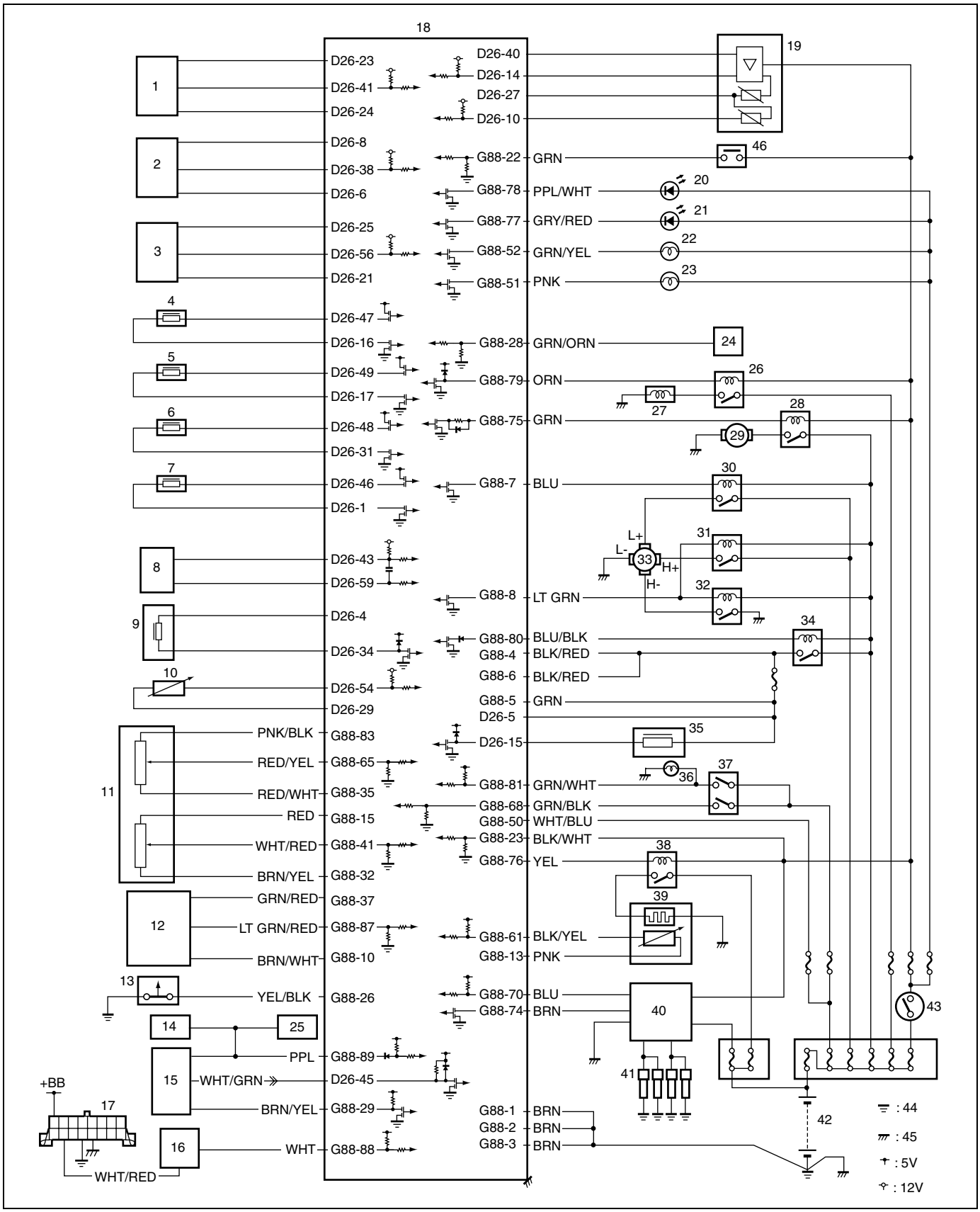

1. Boost pressure sensor	17. Data link connector	33. Radiator cooling fan motor
2. Fuel pressure sensor	18. ECM	34. Main relay
3. CMP sensor	19. MAF and IAT sensor	35. EGR valve
4. Fuel injector No.1	20. Malfunction indicator lamp	36. Brake lamp
5. Fuel injector No.2	21. Service vehicle soon lamp	37. Brake switch
6. Fuel injector No.3	22. Glow indicator lamp	38. Fuel heating relay
7. Fuel injector No.4	23. Oil level indicator lamp	39. Fuel heater and temperature sensor
8. CKP sensor	24. A/C switch (if equipped)	40. Glow controller
9. Fuel pressure regulator	25. EPS control module	41. Glow plug
10. ECT sensor	26. Compressor relay (if equipped)	42. Battery
11. Pedal position sensor	27. A/C compressor (if equipped)	43. Ignition switch
12. A/C pressure sensor (if equipped)	28. Fuel pump relay	44. Engine ground
13. Oil level switch	29. Fuel pump	45. Vehicle body ground
14. ABS control module	30. Radiator fan relay 1	46. Clutch switch
15. Combination meter	31. Radiator fan relay 2	
16. Immobilizer control module	32. Radiator fan relay 3	

ECM Connector (Terminal Arrangement Viewed from Harness Side)

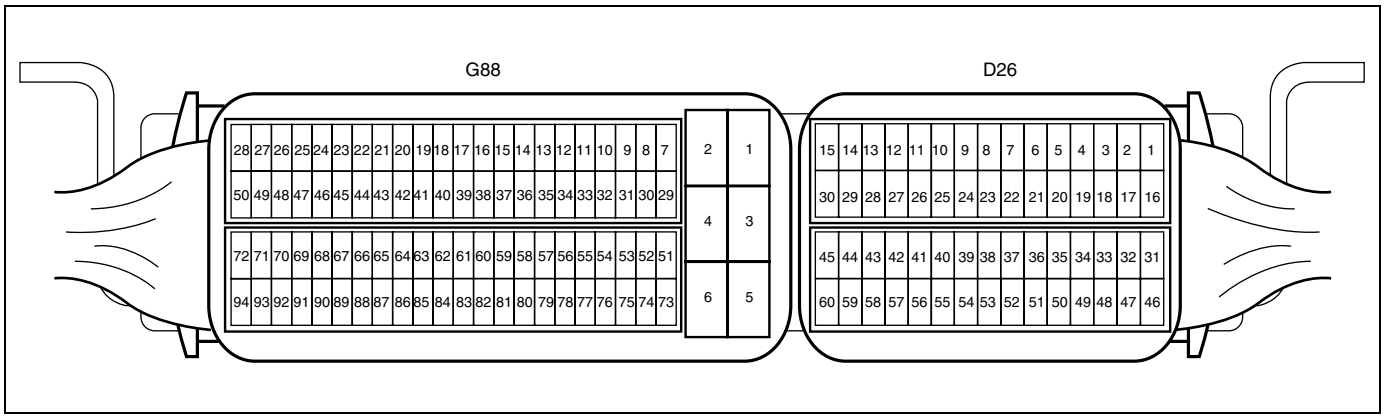

TERMINAL		CIRCUIT
D26	1	Fuel injector No.4 output (low side)
	2	–
	3	–
	4	Output of 12 V power source for fuel pressure regulator
	5	Main power supply
	6	Ground for fuel pressure sensor
	7	–
	8	Output of 5 V power source for fuel pressure sensor
	9	–
	10	Intake air temperature sensor signal
	11	–
	12	–
	13	–
	14	MAF sensor signal
	15	EGR valve output
	16	Fuel injector No.1 output (low side)
	17	Fuel injector No.2 output (low side)
	18	–
	19	–
	20	–
	21	Ground for CMP sensor
	22	–
	23	Output of 5 V power source for boost pressure sensor
	24	Ground for boost pressure sensor
	25	Output of 5 V power source for CMP sensor
	26	–
	27	Ground for MAF and IAT sensor
	28	–
	29	Ground for ECT sensor
	30	–
	31	Fuel injector No.3 output (low side)
	32	–
	33	–
	34	Fuel pressure regulator signal
	35	–
	36	–
	37	–
	38	Fuel pressure sensor signal
	39	–
	40	Output of 5 V power source for MAF and IAT sensor
	41	Boost pressure sensor signal
	42	–
	43	CKP sensor signal (+)
	44	–
	45	Engine coolant temperature signal for combination meter
	46	Fuel injector No.4 output (high side)
	47	Fuel injector No.1 output (high side)
	48	Fuel injector No.3 output (high side)
	49	Fuel injector No.2 output (high side)
	50	–
	51	–

TERMINAL		CIRCUIT
D26	52	–
	53	–
	54	ECT sensor signal
	55	–
	56	CMP sensor signal
	57	–
	58	–
	59	CKP sensor signal (–)
	60	–
G88	1	Ground for ECM
	2	Ground for ECM
	3	Ground for ECM
	4	Main power supply
	5	Main power supply
	6	Main power supply
	7	Radiator fan relay 1 output
	8	Radiator fan relay 2 output
	9	–
	10	Ground for A/C pressure sensor
	11	–
	12	–
	13	Ground for fuel temperature sensor
	14	–
	15	Output of 5 V power source for pedal position sensor (PPS2)
	16	–
	17	–
	18	–
	19	–
	20	–
	21	–
	22	Clutch switch signal
	23	Ignition switch signal
	24	–
	25	–
	26	Oil level switch signal
	27	–
	28	A/C relay signal
	29	Engine revolution signal for combination meter
	30	–
	31	–
	32	Ground for pedal position sensor (PPS2)
	33	–
	34	–
	35	Ground for pedal position sensor (PPS1)
	36	–
	37	Output of 5 V power source for A/C pressure sensor
	38	–
	39	–
	40	–
	41	Pedal position sensor (PPS2) signal
	42	–
	43	–
	44	–

TERMINAL		CIRCUIT
G88	45	–
	46	–
	47	–
	48	–
	49	–
	50	Power source for ECM
	51	Oil level indicator lamp
	52	Glow indicator lamp
	53	–
	54	–
	55	–
	56	–
	57	–
	58	–
	59	–
	60	–
	61	Fuel temperature sensor signal
	62	–
	63	–
	64	–
	65	Pedal position sensor (PPS1) signal
	66	–
	67	–
	68	Brake switch signal
	69	–
	70	Glow controller input signal
	71	–
	72	–
	73	–
	74	Glow controller output signal
	75	Fuel pump relay output
	76	Fuel heating relay output
	77	Service vehicle soon lamp
	78	Malfunction indicator lamp
	79	Compressor relay output
	80	Main power supply relay output
	81	Brake switch signal for brake lamp
	82	–
	83	Output of 5 V power source for pedal position sensor (PPS1)
	84	–
	85	–
	86	–
	87	A/C pressure sensor signal
	88	Serial communication line of data link connector 12 V
	89	ABS control module signal (vehicle speed sensor signal)
	90	–
	91	–
	92	–
	93	–
	94	–

Air Intake System

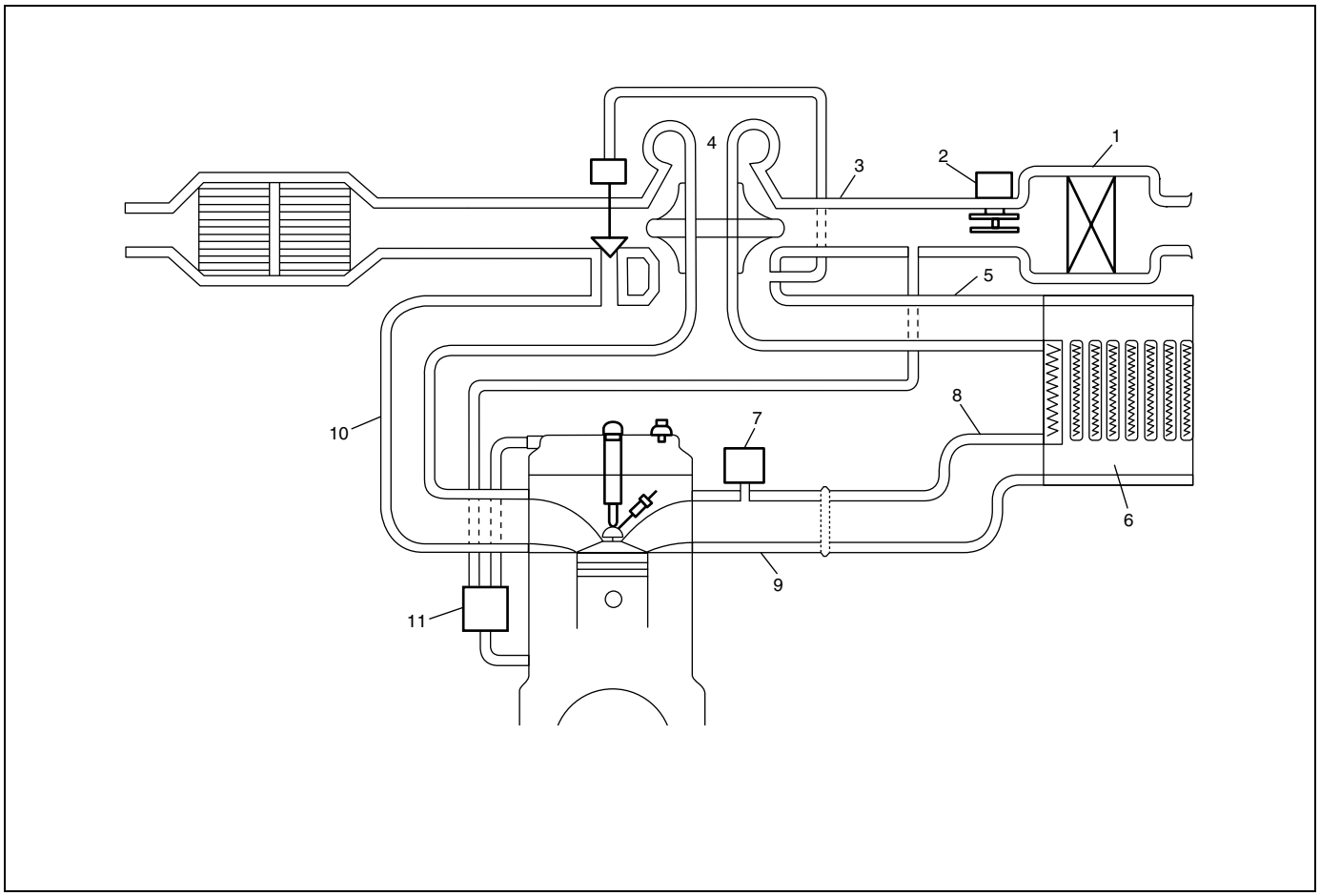

1. Air cleaner	5. Intercooler inlet hose	9. Intake manifold
2. MAF and IAT sensor	6. Intercooler	10. Exhaust manifold
3. Air cleaner outlet hose	7. Boost pressure sensor	11. Oil separator
4. Turbocharger	8. Intercooler outlet hose	

Fuel Delivery System

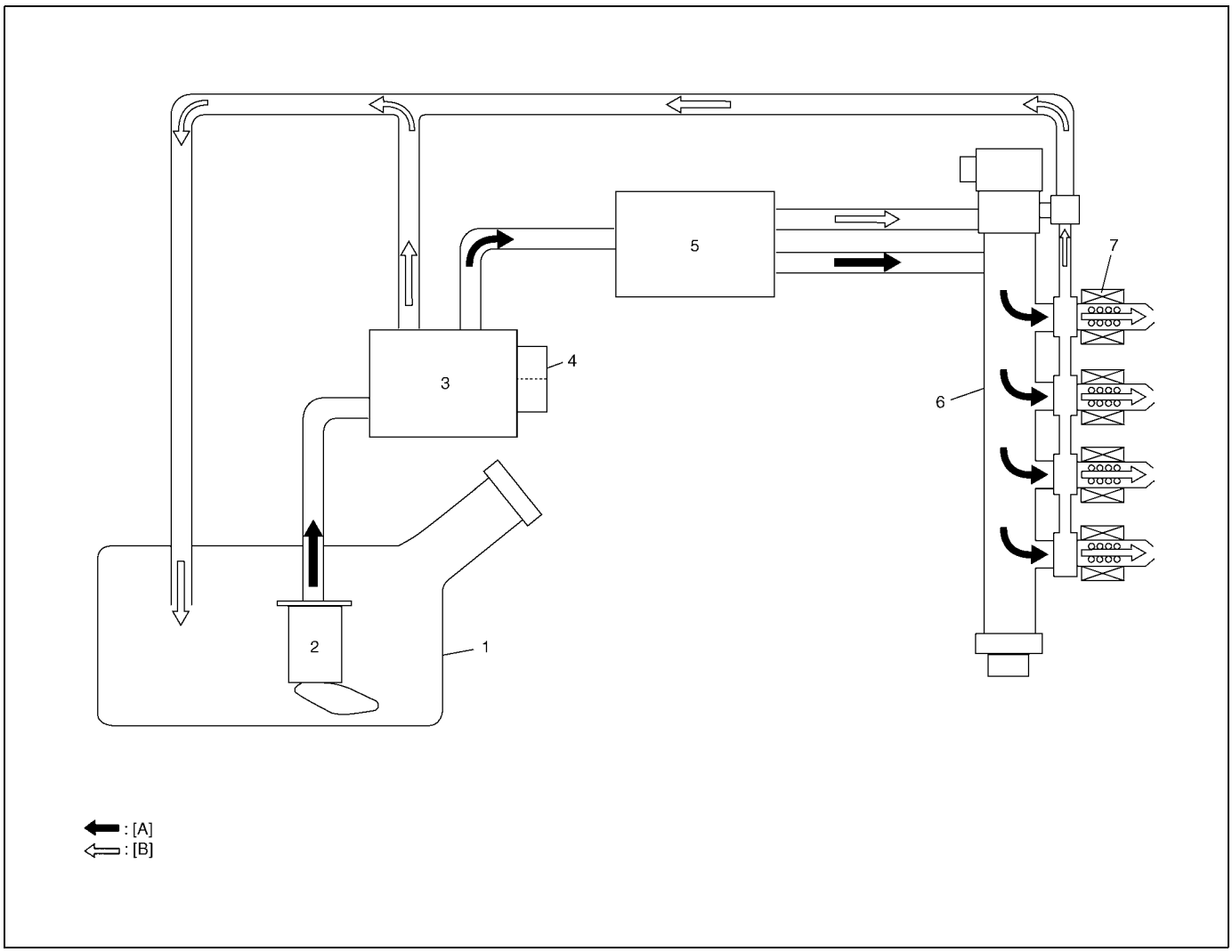

1. Fuel tank	5. Injection pump	[A]: Fuel feed line
2. Fuel pump	6. Common rail (High pressure fuel injection rail)	[B]: Fuel return line
3. Fuel filter	7. Fuel injector	
4. Fuel heater and temperature sensor		

On-Vehicle Service

Idle Speed Inspection

1) Shift transmission into Neutral.
2) Start engine and warm it up to normal operating temperature.
3) Turn all electrical loads off.
4) Using SUZUKI scan tool, verify that idle speed is within specification.

Engine speed: 720 – 880 rpm

5) If not, refer to “B-11, Complaint: Engine Idling” in Section 6-3.

Air Intake System

Vacuum pump removal and installation

Removal

1) Disconnect negative cable from battery.
2) Remove air cleaner assembly referring to “Air Cleaner Assembly Removal and Installation” in Section 6A3.

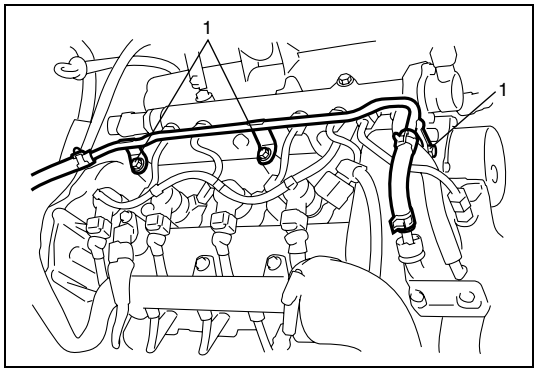

3) Remove fuel feed pipe mounting bolts (1).

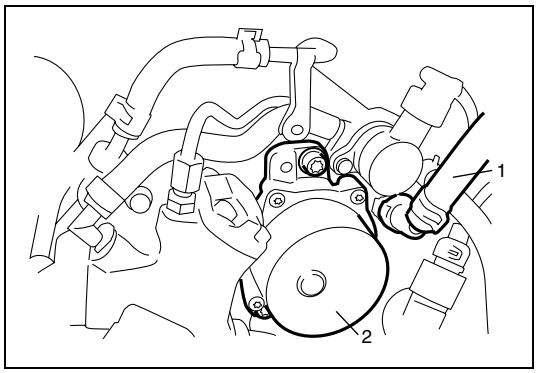

4) Disconnect brake booster hose (1) from vacuum pump.
5) Remove vacuum pump (2) from camshaft housing.

Installation

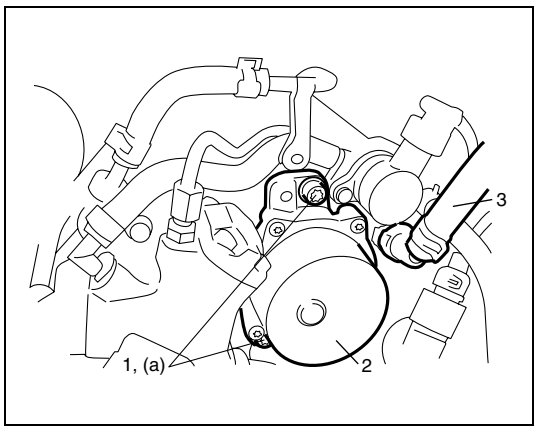

1) Install new gasket to vacuum pump.
2) Install vacuum pump (2) to camshaft housing.
   Fit the dogs of vacuum pump coupling into the slot of camshaft.
3) Tighten vacuum pump bolts (1) as follows.
   a) Tighten vacuum pump bolts to 5 N·m (0.5 kg-m, 4.0 lb-ft).
   b) Tighten vacuum pump bolts to 20 N·m (2.0 kg-m, 14.5 lb-ft).

Tightening torque
Vacuum pump bolt (a): 5 N·m (0.5 kg-m, 4.0 lb-ft) and then 20 N·m (2.0 kg-m, 14.5 lb-ft)

4) Connect brake booster hose (3) to vacuum pump.

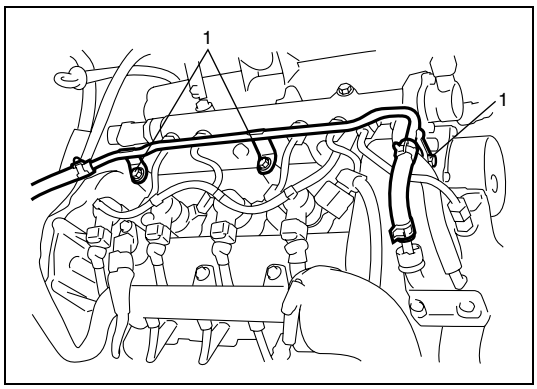

5) Tighten fuel feed pipe mounting bolts (1).

6) Install air cleaner assembly referring to “Air Cleaner Assembly Removal and Installation” in Section 6A3.
7) Connect negative cable to battery.

Fuel Delivery System

WARNING:

- **Fuel vapor is hazardous. It can very easily ignite, causing serious injury and damage. Always keep sparks and flames away from fuel. Fuel line spills and leaks are dangerous. Fuel can ignite and cause serious injuries or death and damage.**
- **Fuel can also irritate skin and eyes. To prevent this, always complete the following "Precautions".**

Precautions

- Before disconnecting a fuel hose or pipe, wait 60 seconds or more after ignition switch turned OFF to release pressure in fuel system.
- Before removing fuel system components, thoroughly clean connections.
- Do not expose removed fuel system parts (high pressure fuel pump, fuel injector, fuel filter, etc.) to dust. Keep them always clean.
- The fuel system must be checked for leaks after service work, refer to "Fuel leakage check" in this section.

Fuel delivery system components

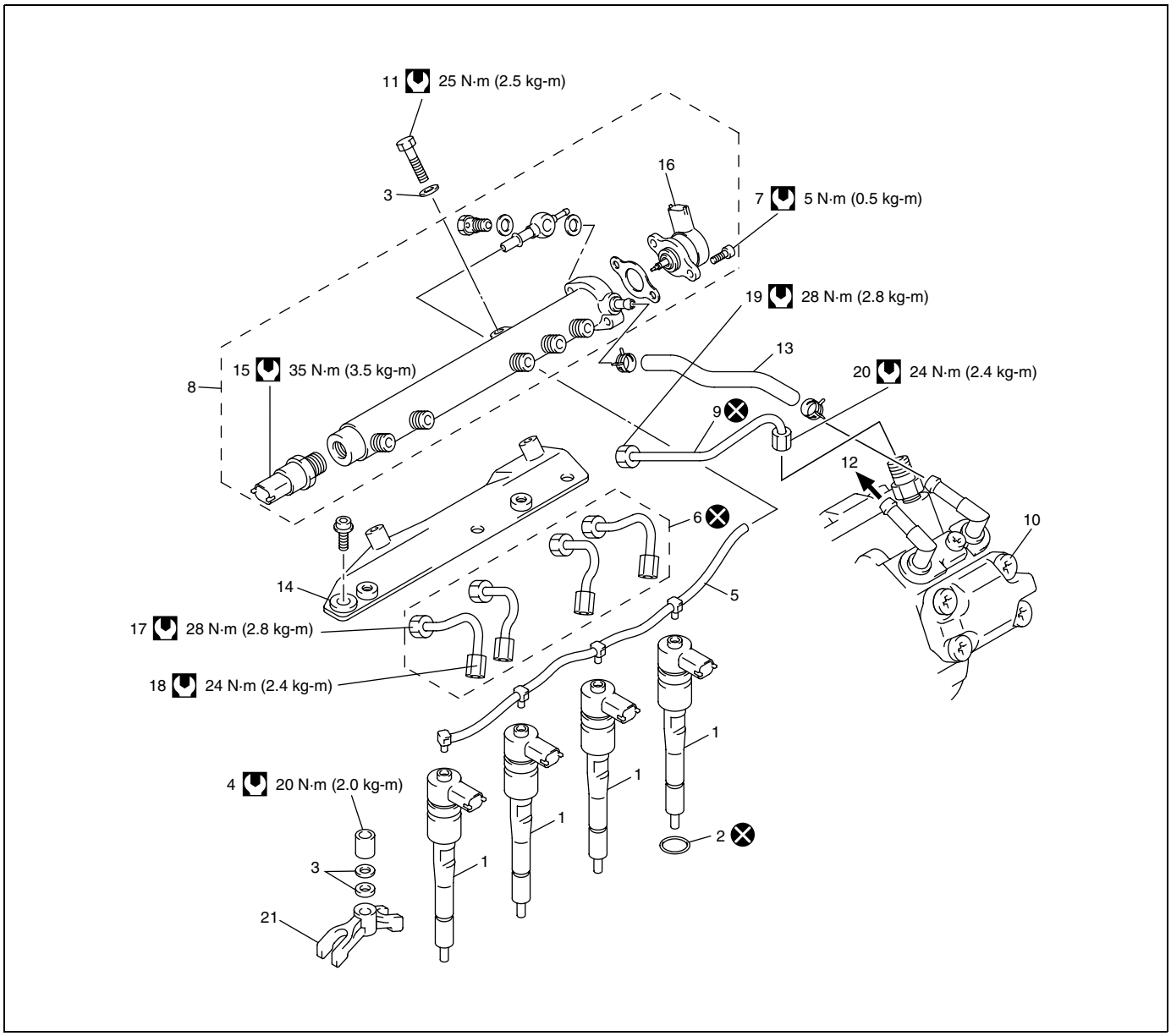

1. Fuel injector	7. Fuel pressure regulator bolt	13. Fuel return hose	19. High pressure supply pipe union nut (common rail side)
2. Sealing ring	8. Common rail	14. Common rail bracket	20. High pressure supply pipe union nut (injection pump side)
3. Washer	9. High pressure supply pipe	15. Fuel pressure sensor	21. Fuel injector bracket
4. Nut	10. Injection pump	16. Fuel pressure regulator	: Tightening torque
5. Return hose	11. Common rail bolt	17. High pressure pipe union nut (common rail side)	: Do not reuse.
6. High pressure pipe	12. To fuel feed pipe	18. High pressure pipe union nut (fuel injector side)	

Fuel leakage check

1) Turn ignition switch to ON position.
2) Check for the fuel leakage in each part, which was serviced.
3) Start the engine, and then check for the fuel leakage in each part, which was serviced.
4) Run engine at 4000 r/min. for about 30 seconds and then stop engine.
5) Check for the fuel leakage in each part, which was serviced.

Fuel pump on-vehicle inspection

1) Check that fuel pump operating sound is heard from fuel pump for about 20 seconds and then stop when turning ignition switch to ON position.
   If above check result is not satisfactory, confirm that check result of each step is in good condition referring to “C-06, Fuel Pump Relay Circuit” in Section 6-3.

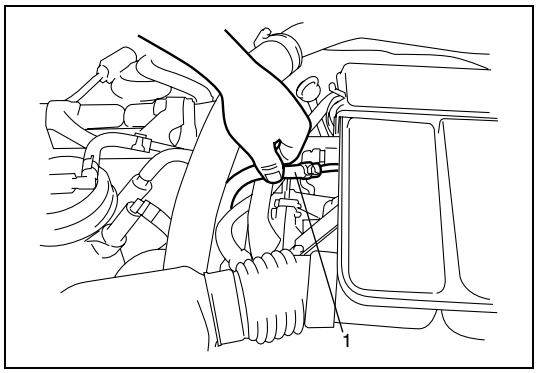

2) Check that fuel pressure is felt at fuel feed hose (1) for about 20 seconds after ignition switch ON.
   If fuel pressure is not felt, check fuel leakage from fuel line and clogged fuel line.

Fuel pump removal and installation

Refer to “Fuel Pump Assembly Removal and Installation” in Section 6C3.

Fuel pump inspection

Refer to “Fuel Pump Inspection” in Section 6C3.

Fuel injector on-vehicle inspection

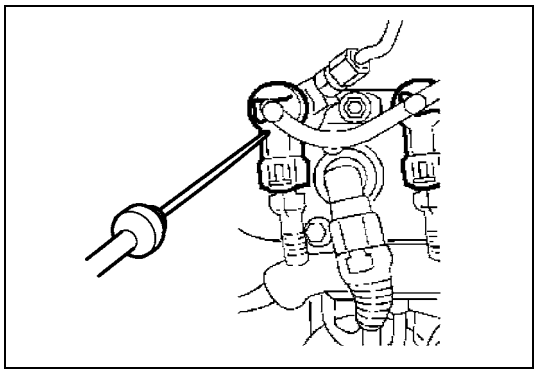

1) Using sound scope or such, check operating sound of injector when engine is running or cranking.
   Cycle of operating sound should vary according to engine speed.
   If no sound or an unusual sound is heard, confirm that check result of each step is in good condition referring to "C-24, Cylinder 1 Injector Circuit", "C-25, Cylinder 2 Injector Circuit", "C-26, Cylinder 3 Injector Circuit" or "C-27, Cylinder 4 Injector Circuit" in Section 6-3.

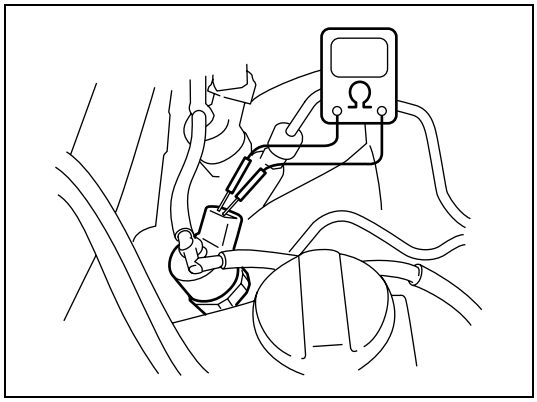

2) Disconnect coupler from injector, connect ohmmeter between terminals of injector and check resistance.
   If resistance is out of specification, replace.

   Resistance of injector
   about 0.5 Ω

3) Connect coupler to injector securely.

Fuel injector removal and installation

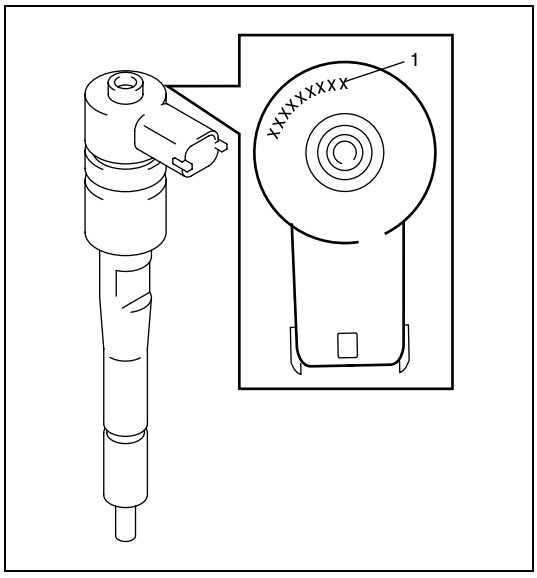

NOTE:

The calibration code (1) is the code that is given to each fuel injector, and it represents the performance characteristics of the fuel injector. It is registered in ECM, and ECM controls fuel injection according to the performance characteristics of the fuel injector. Therefore, after removing fuel injectors, be sure to install them as they were. In case that the fuel injectors were replaced with new ones, be sure to register each calibration code in ECM referring to "ECM registration" in this section. For your reference, it is possible to know what calibration codes are currently registered in ECM.

Removal

1) Disconnect negative (–) cable at battery.
2) Remove air cleaner assembly referring to “Air Cleaner Assembly Removal and Installation” in Section 6A3.

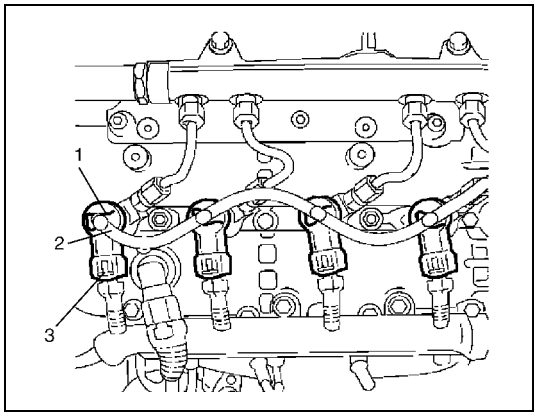

3) Remove clips (1), and then disconnect return hose (2) from fuel injectors.
4) Disconnect fuel injector connectors (3).

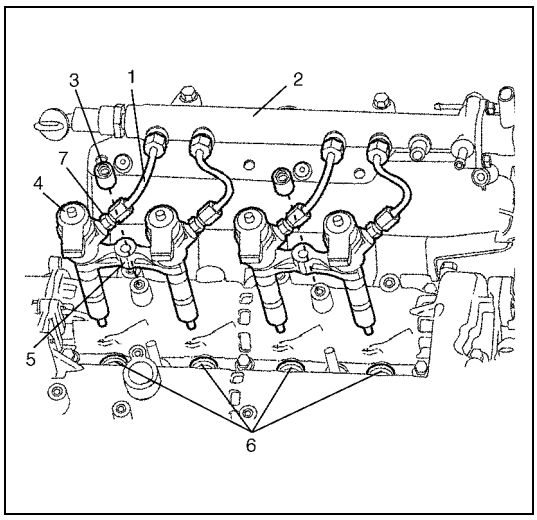

5) Remove high pressure pipes (1).
   When loosening union nut of high pressure pipe, holding union nut (7) of fuel injector (4) with wrench.
6) Remove fuel injector bracket nut (3).
7) Remove fuel injectors with its bracket (5) from camshaft housing.
8) Remove sealing rings (6) from camshaft housing.

2. Common rail

Installation

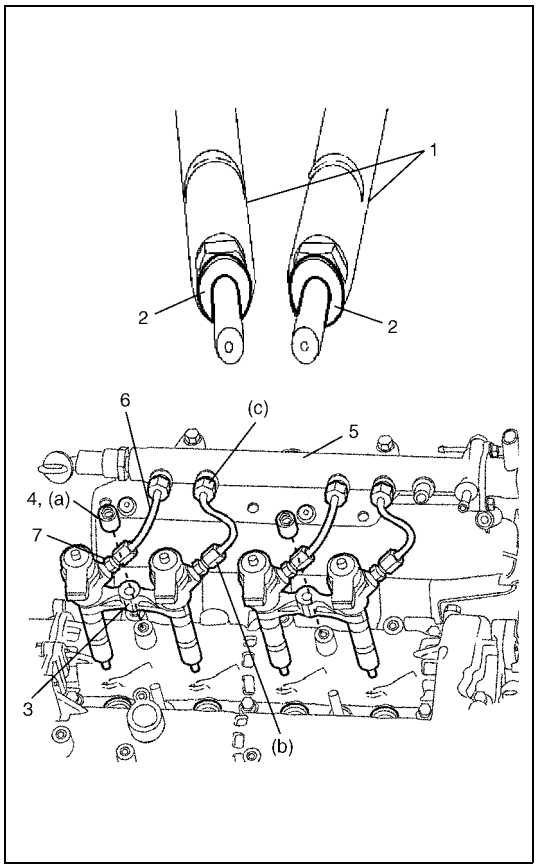

1) Install new sealing rings (2) to fuel injectors (1).
2) Set fuel injector bracket (3) to fuel injectors.
3) Install fuel injectors to camshaft housing and tighten fuel injector bracket nut (4) temporarily by hand.
4) Install new high pressure pipes (6) and tighten each union nut temporarily by hand.
5) Tighten fuel injector bracket nut to specified torque.

Tightening torque
Fuel injector bracket nut
(a): 20 N·m (2.0 kg-m, 14.5 lb-ft)

6) Tighten high pressure pipe union nuts to specified torque.
When tightening union nut of high pressure pipe, holding union nut (7) of fuel injector with wrench.

Tightening torque
High pressure pipe union nut (fuel injector side)
(b): 24 N·m (2.4 kg-m, 17.5 lb-ft)
High pressure pipe union nut (common rail side)
(c): 28 N·m (2.8 kg-m, 20.5 lb-ft)

5. Common rail

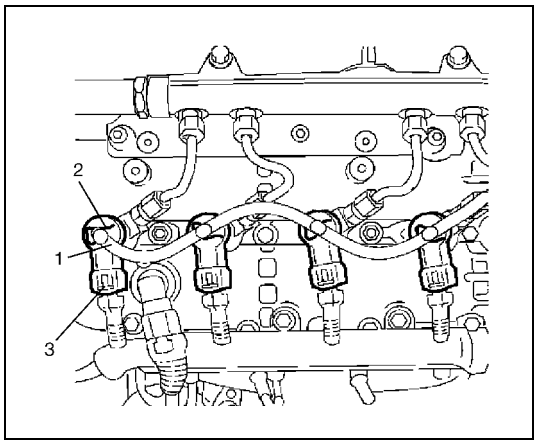

7) Connect return hose (1) to fuel injectors and then install clips (2) to fuel injectors.
8) Connect fuel injector connectors (3).
9) Install air cleaner assembly referring to “Air Cleaner Assembly Removal and Installation” in Section 6A3.
10) Connect negative (–) cable at battery.
In case that the fuel injector(s) was replaced, perform “ECM registration” in this section to register the fuel injector calibration code into ECM.
11) Check fuel leakage referring to “Fuel leakage check” in this section.

Common rail (High pressure fuel injection rail) removal and installation

Removal

1) Disconnect negative cable from battery.
2) Remove air cleaner assembly referring to “Air Cleaner Assembly Removal and Installation” in Section 6A3.

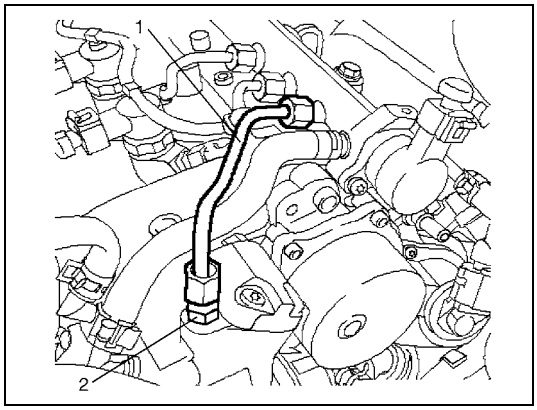

3) Remove high pressure supply pipe (1) from injection pump and common rail.
   When loosening union nut of high pressure supply pipe, holding union nut (2) of injection pump with wrench.
4) Remove high pressure pipes from fuel injectors and common rail referring to Step 5) of “Removal” under “Fuel injector removal and installation” in this section.

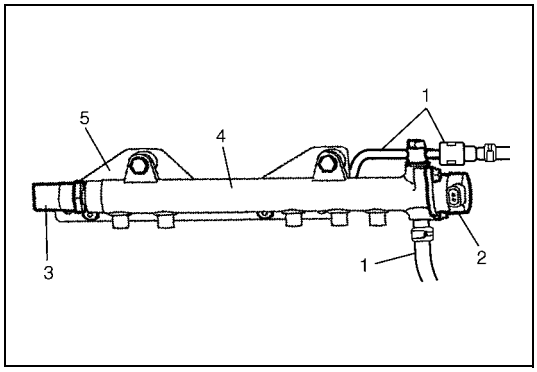

5) Disconnect fuel return hoses (1) from common rail.
6) Disconnect connectors from fuel pressure regulator (2) and fuel pressure sensor (3).
7) Remove common rail (4) from its bracket (5).

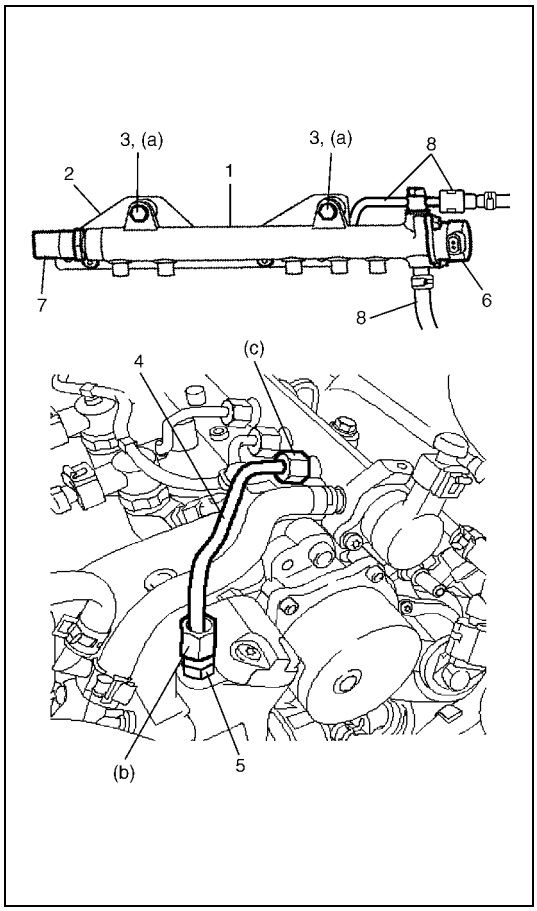

Installation

1) Install common rail (1) to its bracket (2) and tighten common rail bolts (3) temporarily by hand.
2) Install new high pressure pipes for injectors and new high pressure supply pipe (4). Tighten each union nut temporarily by hand.
3) Tighten common rail bolts to specified torque.

Tightening torque
Common rail bolt (a): 25 N·m (2.5 kg-m, 18.0 lb-ft)

4) Tighten high pressure supply pipe union nuts to specified torque.
   When tightening union nut of high pressure supply pipe, holding union nut (5) of injection pump with wrench.

Tightening torque
High pressure supply pipe union nut (injection pump side) (b): 24 N·m (2.4 kg-m, 17.5 lb-ft)
High pressure supply pipe union nut (common rail side) (c): 28 N·m (2.8 kg-m, 20.5 lb-ft)

5) Tighten high pressure pipe union nuts to specified torque referring to Step 6) of “Installation” under “Fuel injector removal and installation” in this section.
6) Connect connectors to fuel pressure regulator (6) and fuel pressure sensor (7).
7) Connect fuel return hoses (8) to common rail.
8) Install air cleaner assembly referring to “Air Cleaner Assembly Removal and Installation” in Section 6A3.
9) Connect negative cable to battery.
10) Check fuel leakage referring to “Fuel leakage check” in this section.

Injection pump removal and installation

Removal

1) Disconnect negative cable at battery.
2) Remove air cleaner assembly referring to “Air Cleaner Assembly Removal and Installation” in Section 6A3.
3) Remove vacuum pump referring to “Vacuum pump removal and installation” in this section.
4) Remove high pressure supply pipe referring to Step 3) of “Removal” under “Common rail (High pressure fuel injection rail) removal and installation” in this section.

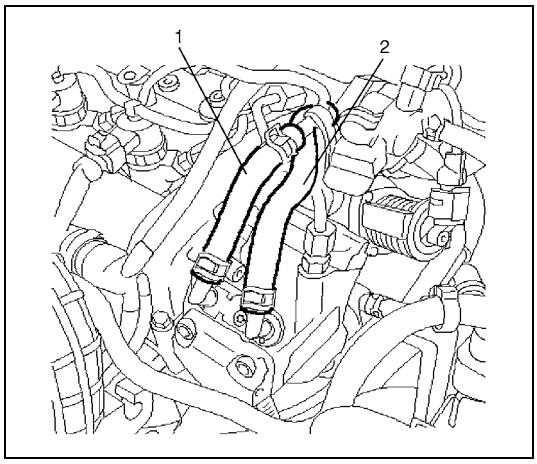

5) Disconnect fuel feed hose (1) and fuel return hose (2) from injection pump.

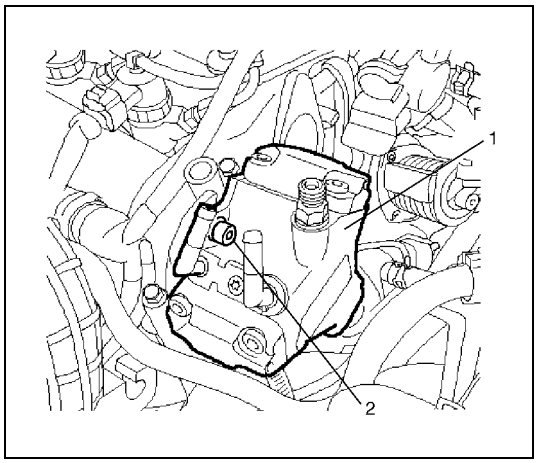

6) Remove injection pump (1) from camshaft housing by removing 3 bolts (2).

Installation

1) Clean mating surfaces of injection pump and camshaft housing.

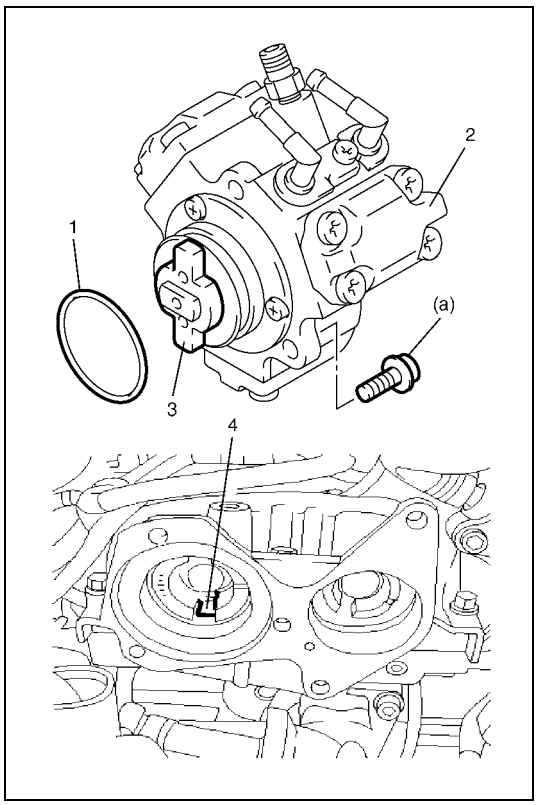

2) Install new gasket (1) to injection pump.
3) Install injection pump (2) to camshaft housing.
   Fit dogs (3) of injection pump coupling into the groove (4) of camshaft.
4) Tighten injection pump bolts to specified torque.

Tightening torque
Injection pump bolt (a): 15 N·m (1.5 kg-m, 11.0 lb-ft)

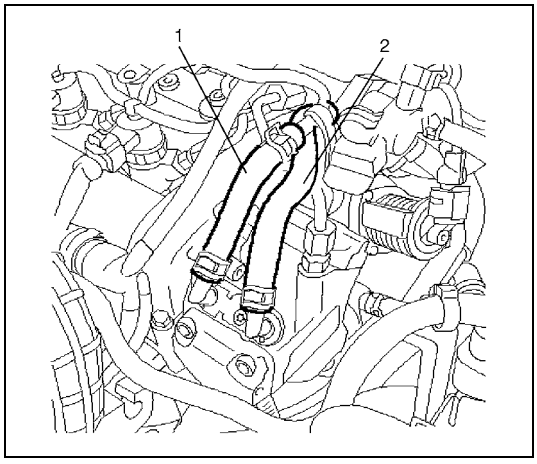

5) Connect fuel feed hose (1) and fuel return hose (2) to injection pump.

6) Install new high pressure supply pipe referring to Step 2) and 4) of “Installation” under “Common rail (High pressure fuel injection rail) removal and installation” in this section.
7) Install vacuum pump referring to “Vacuum pump removal and installation” in this section.
8) Remove air cleaner assembly referring to “Air Cleaner Assembly Removal and Installation” in Section 6A3.
9) Connect negative cable to battery.
10) Check fuel leakage referring to “Fuel leakage check” in this section.

Electronic Control System

Engine control module (ECM) removal and installation

CAUTION:
As ECM consists of precision parts, be careful not to expose it to excessive shock.

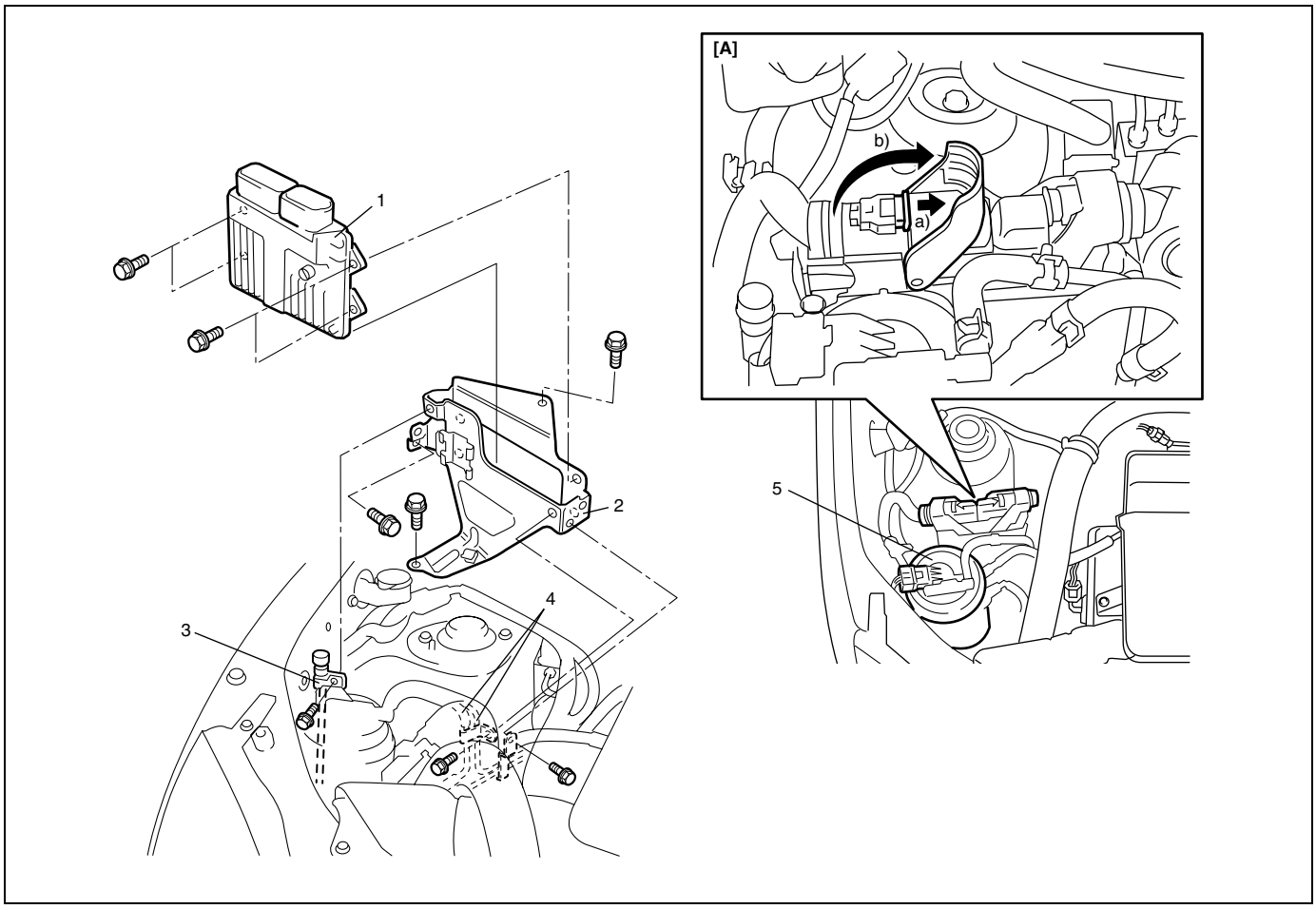

[A]: Disconnecting procedure for ECM connector	2. ECM bracket	4. Fuel pipe
1. ECM	3. A/C refrigerant pipe	5. Fuel filter assembly

Removal

1) Disconnect negative cable at battery.
2) Disconnect connector from fuel filter assembly and then detach fuel filter assembly from ECM bracket.
3) Remove fuel pipe mounting bolts and A/C refrigerant pipe mounting bolt.

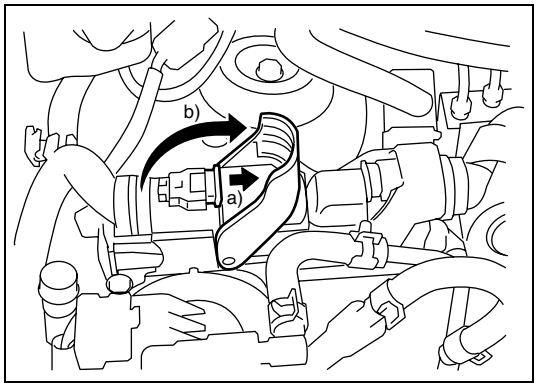

4) Disconnect connectors from ECM as follows.
   a) Pull out lock slider to release locking of lock lever
   b) Pull up the lock lever
5) Remove ECM with its bracket from vehicle body.
6) Remove ECM from ECM bracket.

Installation

NOTE:

If ECM is replaced, register vehicle specification (fuel injector calibration code, vehicle variant, password for immobilizer system and secret key code for immobilizer system) into ECM referring to "ECM registration" in this section and "Procedure after ECM replacement" in Section 8G3.

Reverse removal procedure for installation.

ECM registration

Procedure after ECM replacement

1) Connect SUZUKI scan tool to DLC.
2) Register the following information for ECM referring to “SUZUKI Scan Tool Operator’s Manual”.
   - Fuel injector calibration code
   - Vehicle variant (vehicle configuration (equipment such as ABS and A/C))
3) Using SUZUKI scan tool, register secret key code (SKC) and password for immobilizer system referring to “SUZUKI Scan Tool Operator’s Manual”.
4) Check for registration data referring to “Registration data check” in this section.

Procedure after fuel injector replacement

1) Connect SUZUKI scan tool to DLC.
2) Register the calibration code of the fuel injector, which is newly installed, for ECM referring to “SUZUKI Scan Tool Operator’s Manual”.
3) Check for registration data referring to “Registration data check” in this section.

Registration data check

1) Connect SUZUKI scan tool to data link connector (DLC) located on underside of instrument panel at driver's seat side.

Special tool
SUZUKI scan tool

2) Turn ignition switch to ON position.
3) Select "Data List" of "ECM registration" under "MISC Test" command in SELECT MODE menu of SUZUKI scan tool.
4) Confirm whether fuel injector calibration code and vehicle variant (vehicle configuration (equipment such as ABS and A/C)) installed on correspond to specification displayed on SUZUKI scan tool.
   Register fuel injector calibration code and vehicle variant (vehicle configuration (equipment such as ABS and A/C)) into ECM referring to "ECM registration" in this section when it does not correspond.
5) Push "EXIT" button of SUZUKI scan tool.

Mass air flow (MAF) and intake air temperature (IAT) sensor removal and installation

CAUTION:

- **Do not cleansing MAF and IAT sensor.**
- **If MAF and IAT sensor has been dropped it should be replaced.**
- **Don't disassemble MAF and IAT sensor.**
- **Do not expose MAF and IAT sensor to any shock.**
- **Do not blow compressed air by using air gun or the like.**
- **Do not put finger or any other object into MAF and IAT sensor. Malfunction may occur.**

Removal

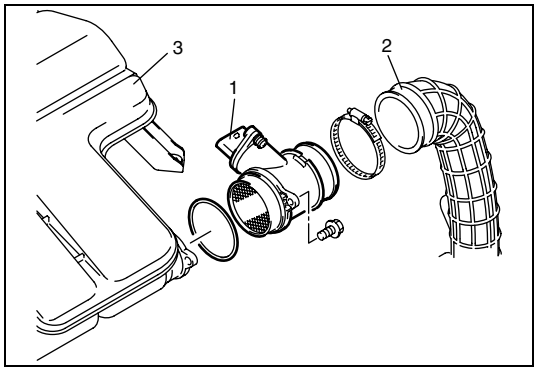

1) Disconnect negative cable at battery and coupler from MAF and IAT sensor (1).
2) Disconnect air cleaner outlet hose (2) from MAF and IAT sensor.
3) Remove MAF and IAT sensor from air cleaner case (3).

Installation

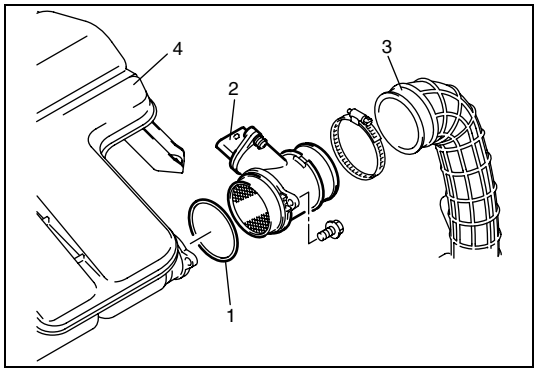

1) Check MAF and IAT sensor O-ring (1) for deterioration and damage.
   If malfunction is found, replace O-ring.
2) Install MAF and IAT sensor (2) to air cleaner case (4).
3) Connect air cleaner outlet hose (3).
   Tighten hose clamp to specified torque referring to "Air Cleaner Assembly Removal and Installation" in Section 6A3.
4) Connect MAF sensor coupler securely.
5) Connect battery negative cable to battery.

Glow plug removal and installation

Removal

CAUTION:
- **Do not damage heating section of the glow plug.**
- **Do not use glow plug that has been dropped.**
- **When removing glow plug, first loosen it by using a tool so that one or more screw threads remain engaged, then loosen and remove by hand.**

1) Disconnect negative (–) cable at battery.

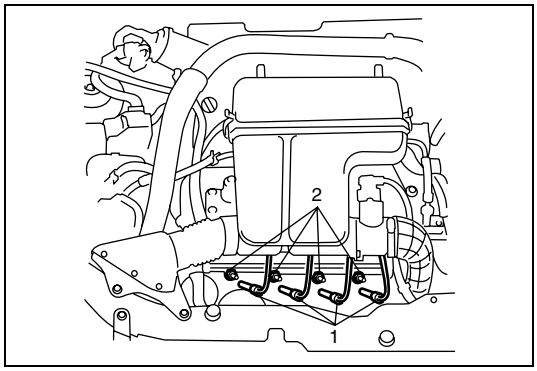

2) Pull off glow plug wires (1).
3) Remove glow plugs (2) from cylinder head.

Installation

For installation, reverse removal procedure noting the following.

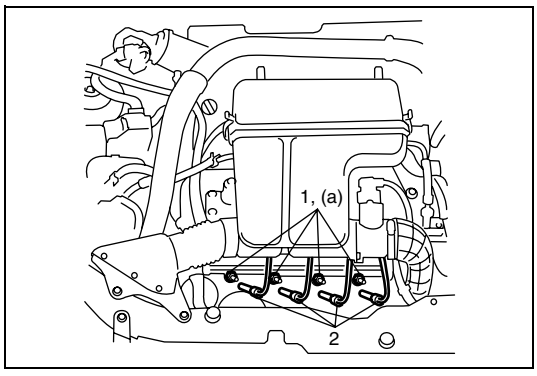

- Tightening glow plug (1) to specified torque.

Tightening torque
Glow plug (a): 9 N·m (0.9 kg-m, 6.5 lb-ft)

- Connect glow plug wires (2) securely.

Pedal position sensor removal and installation

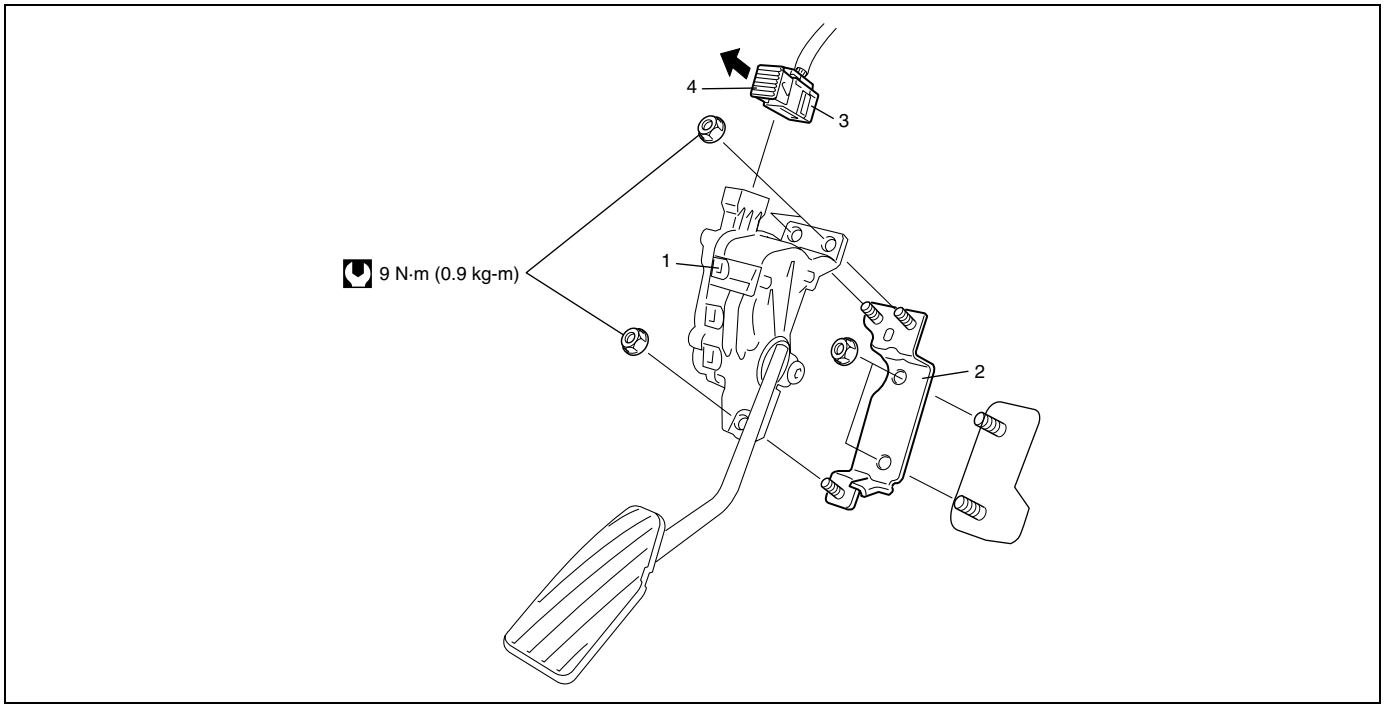

1. Accelerator pedal assembly	3. Pedal position sensor connector	: Tightening torque
2. Accelerator pedal bracket	4. Pedal position sensor connector lock lever	

Removal

1) Disconnect negative cable at battery.
2) Disconnect connector from pedal position sensor by pull off the lock lever.
3) Remove accelerator pedal assembly from vehicle body.

Installation

Reverse removal procedure for installation noting the followings.

- Connect pedal position sensor connector securely.
- Tighten accelerator pedal assembly mounting nuts to specified torque.

Tightening torque
Accelerator pedal mounting nut
(a): 9 N·m (0.9 kg-m, 6.5 lb-ft)

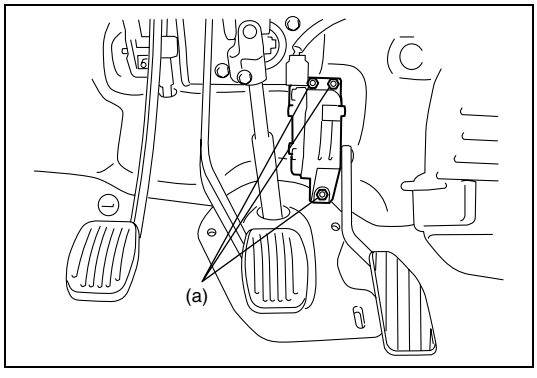

Fuel heater and temperature sensor removal and installation

Removal

1) Disconnect negative cable at battery.
2) Remove fuel heater and temperature sensor (fuel filter cap) referring to “Fuel Filter Element Removal and Installation” in Section 6C3.

Installation

Reverse removal procedure for installation.

Fuel temperature sensor inspection

1) Remove fuel temperature sensor referring to “Fuel heater and temperature sensor removal and installation” in this section.

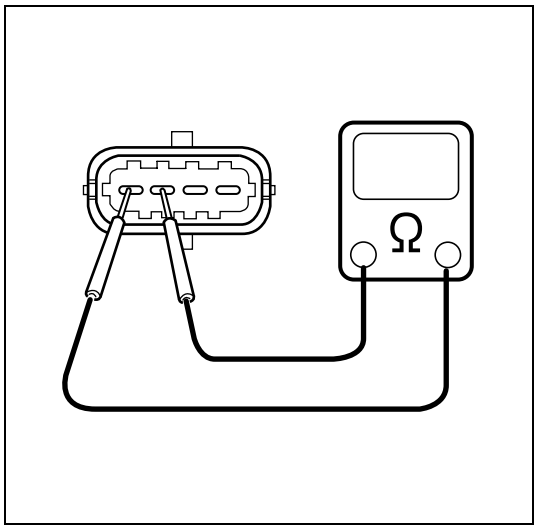

2) Check for resistance between fuel temperature sensor terminals.
   If not as specified, replace fuel heater and temperature sensor.

Fuel temperature sensor resistance

Water temperature °C (°F)	Resistance (kΩ)
0 (32)	5.97
20 (68)	2.50
40 (104)	1.15
60 (140)	0.58
80 (176)	0.31
100 (212)	0.18

Fuel pressure sensor removal and installation

Removal

1) Disconnect negative cable at battery.
2) Remove air cleaner assembly referring to “Air Cleaner Assembly Removal and Installation” in Section 6A3.
3) Disconnect fuel pressure sensor connector.

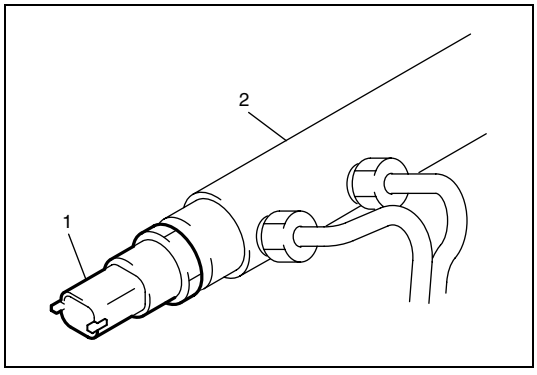

4) Remove fuel pressure sensor (1) from common rail (2).

Installation

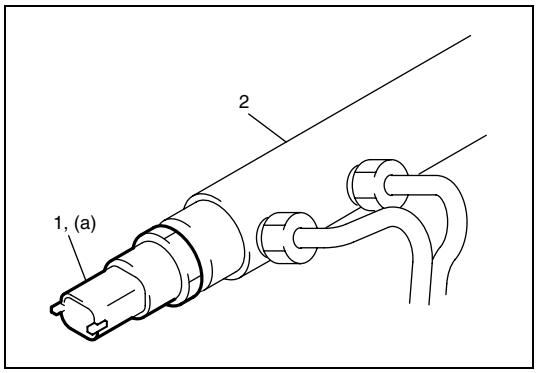

1) Install fuel pressure sensor (1) to common rail (2). Tighten fuel pressure sensor to specified torque.

Tightening torque
Fuel pressure sensor
(a): 35 N·m (3.5 kg-m, 25.5 lb-ft)

2) Connect fuel pressure sensor connector.
3) Install air cleaner assembly referring to “Air Cleaner Assembly Removal and Installation” in Section 6A3.
4) Connect negative cable to battery.
5) Check fuel leakage referring to “Fuel leakage check” in this section.

Fuel pressure regulator removal and installation

Removal

1) Disconnect negative cable at battery.
2) Remove vacuum pump referring to “Vacuum pump removal and installation” in this section.
3) Disconnect fuel pressure regulator connector.

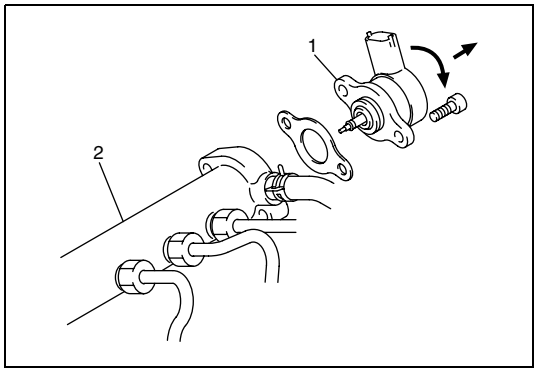

4) Pull out fuel pressure regulator (1) from common rail (2) with turning it counterclockwise by hand.

Installation

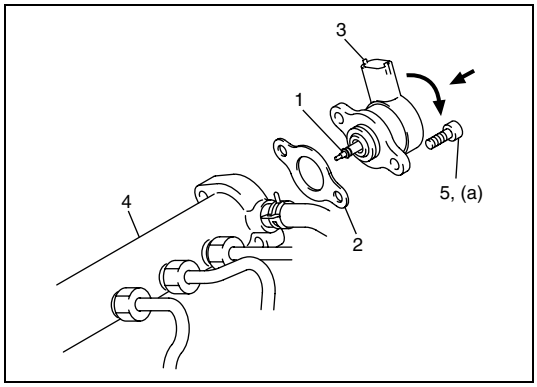

1) Apply fuel to seal rings (1) of fuel pressure regulator.
2) Using new gasket (2), push fuel pressure regulator (3) to common rail (4) with turning it counterclockwise by hand.
3) Tighten fuel pressure regulator bolts (5) to specified torque.

Tightening torque
Fuel pressure regulator bolt
(a): 5 N·m (0.5 kg-m, 4.0 lb-ft)

4) Install vacuum pump referring to “Vacuum pump removal and installation” in this section.
5) Connect negative cable to battery.
6) Check fuel leakage referring to “Fuel leakage check” in this section.

Fuel pressure regulator inspection

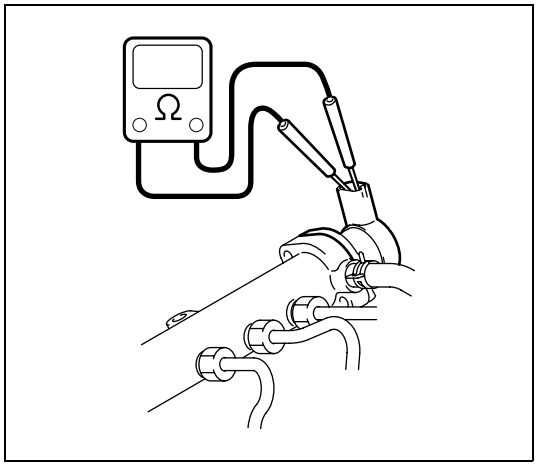

Check resistance between terminals of fuel pressure regulator.
If resistance is out of specification, replace fuel pressure regulator referring to “Fuel pressure regulator removal and installation” in this section.

Fuel pressure regulator resistance
2.07 – 2.53 Ω at 20°C, 68°F

Engine coolant temperature sensor (ECT sensor) removal and installation

Removal

1) Disconnect negative cable at battery.
2) Drain cooling system.

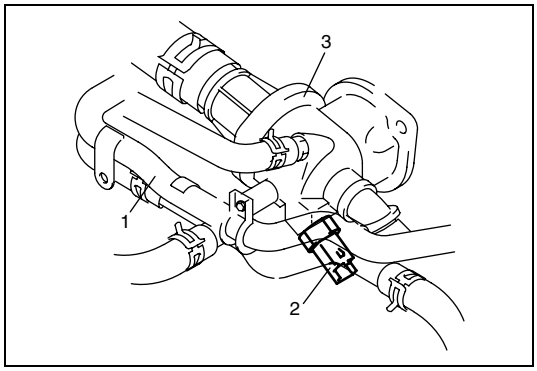

3) Detach heater outlet pipe (1).
4) Disconnect ECT sensor connector.
5) Remove ECT sensor (2) from thermostat housing (3).

Installation

1) Apply thread lock compound to thread part of ECT sensor.

"A": Thread locking compound (red)

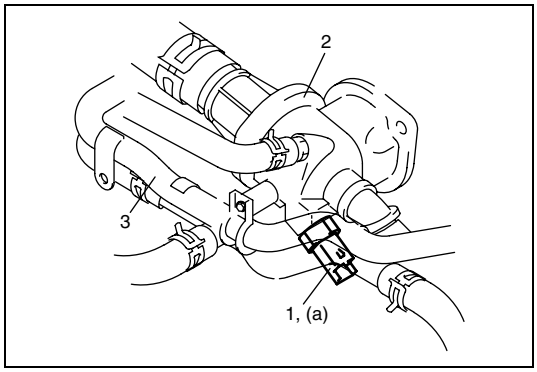

2) Install ECT sensor (1) to thermostat housing (2).
   Tighten ECT sensor to specified torque.

Tightening torque
ECT sensor
(a): 34 N·m (3.4 kg-m, 24.5 lb-ft)

3) Connect ECT sensor connector.
4) Install heater outlet pipe (3).

5) Refill cooling system referring to "Cooling System Flush and Refill" in Section 6B3.
6) Connect negative cable to battery.
7) Check cooling system leakage referring to "Cooling System Inspection and Service" in Section 6B3.

Engine coolant temperature sensor (ECT sensor) inspection

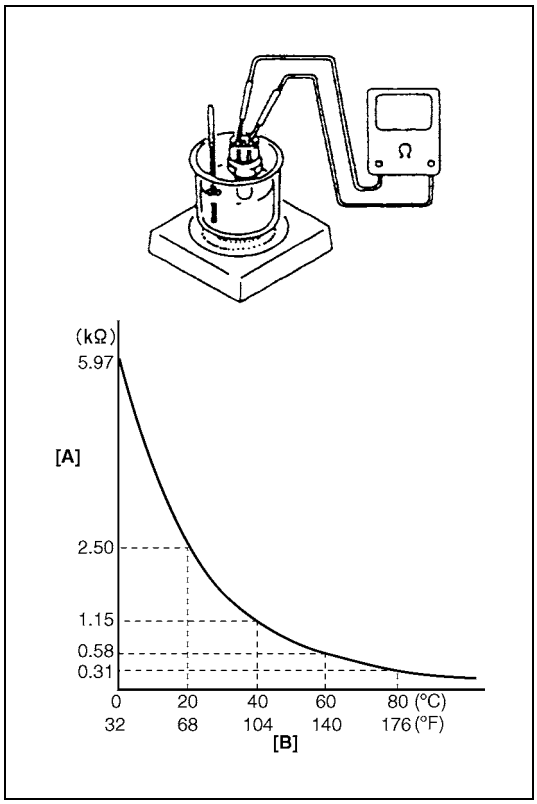

1) Remove ECT sensor referring to "Engine coolant temperature sensor (ECT sensor) removal and installation" in this section.
2) Immerse temperature sensing part of ECT sensor in water and measure resistance between sensor terminals while heating water gradually.
   If measured resistance doesn't shown such characteristic as shown, replace ECT sensor.

ECT sensor resistance

Water temperature °C (°F)	Resistance (kΩ)
0 (32)	5.97
20 (68)	2.50
40 (104)	1.15
60 (140)	0.58
80 (176)	0.31
100 (212)	0.18

1. Resistance
2. Temperature

Camshaft position sensor (CMP sensor) removal and installation

Removal

1) Disconnect negative cable at battery.
2) Remove air cleaner assembly referring to “Air Cleaner Assembly Removal and Installation” in Section 6A3.
3) Disconnect CMP sensor connector.

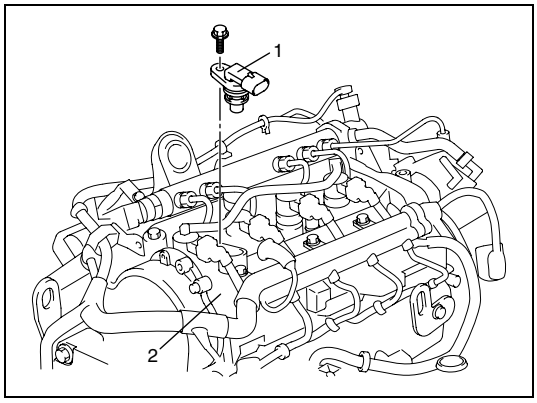

4) Remove CMP sensor (1) from camshaft housing (2).

Installation

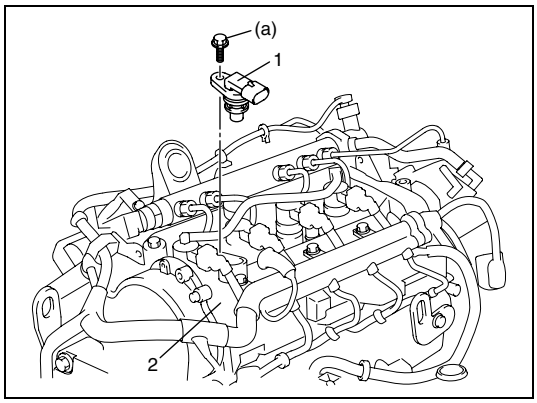

1) Install CMP sensor (1) to camshaft housing (2). Tighten CMP sensor bolt to specified torque.

Tightening torque
CMP sensor bolt (a): 7 N·m (0.7 kg-m, 5.0 lb-ft)

2) Connect CMP sensor connector.
3) Install air cleaner assembly referring to “Air Cleaner Assembly Removal and Installation” in Section 6A3.
4) Connect negative cable to battery.

Crankshaft position (CKP) sensor (engine speed sensor) removal and installation

Removal

1) Disconnect negative cable at battery.
2) Hoist vehicle.
3) Disconnect CKP sensor connector.

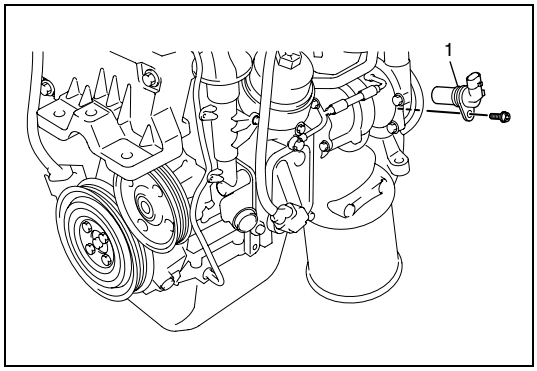

4) Remove CKP sensor (1) from cylinder block.

Installation

Reverse removal procedure for installation noting the following.

- Clean CKP sensor and sensor rotor teeth before installation.

Crankshaft position (CKP) sensor (engine speed sensor) inspection

1) Remove CKP sensor referring to “Crankshaft position (CKP) sensor (engine speed sensor) removal and installation” in this section.

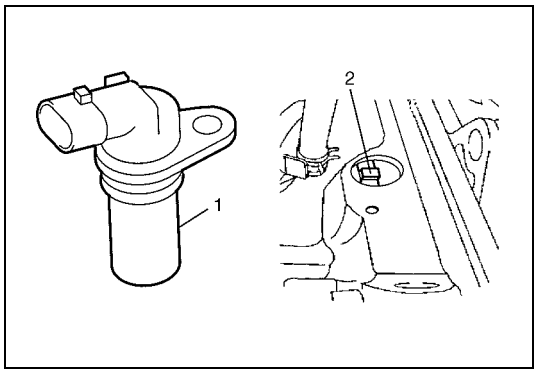

2) Check that CKP sensor (1) and sensor rotor tooth (2) is free from any metal particles and damage.

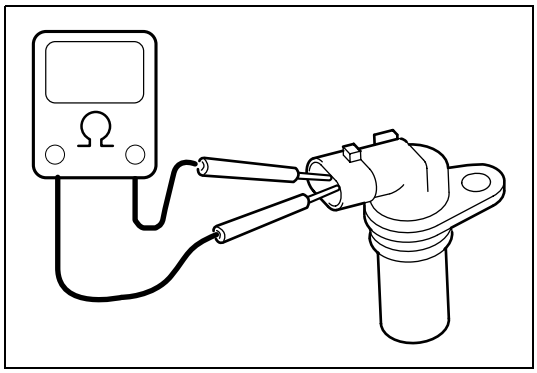

3) Check that resistance between terminals of CKP sensor is within specification.
   If above check as not specified, replace CKP sensor.

CKP sensor resistance: 632 – 948 Ω

Engine oil level switch removal and installation

Removal

1) Disconnect negative cable at battery.
2) Remove oil pan referring to “Oil Pan Removal and Installation” in Section 6A3.

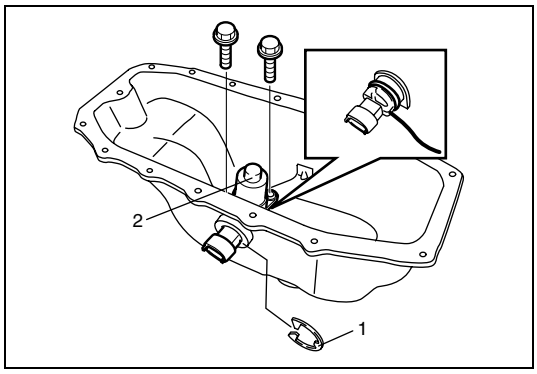

3) Remove clip (1).
4) Remove engine oil level switch (2) from oil pan.

Installation

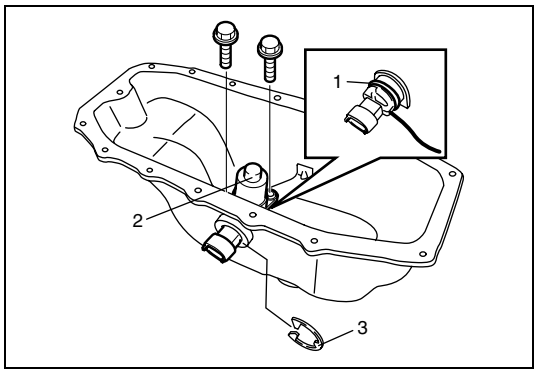

1) Check O-ring (1) of engine oil level switch deformed or damage.
   If malfunction is found, replace engine oil level switch.
2) Install engine oil level switch (2) to oil pan.
3) Install clip (3) to engine oil level switch connector securely.
4) Install oil pan referring to “Oil Pan Removal and Installation” in Section 6A3.
5) Connect negative cable to battery.
6) Check to make sure that there is no engine oil leakage.

Engine oil level switch inspection

1) Disconnect negative cable at battery.
2) Hoist vehicle.

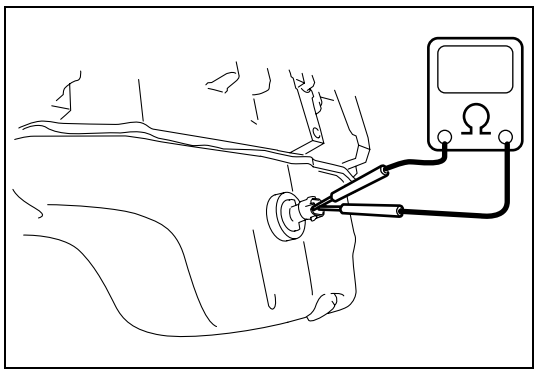

3) Check for continuity between terminals of engine oil level switch.
   If found defective, replace engine oil level switch.

Engine oil level switch specification
When engine oil is filled up to specified level: Continuity
When engine oil is drained: No continuity

Boost pressure sensor removal and installation

Removal

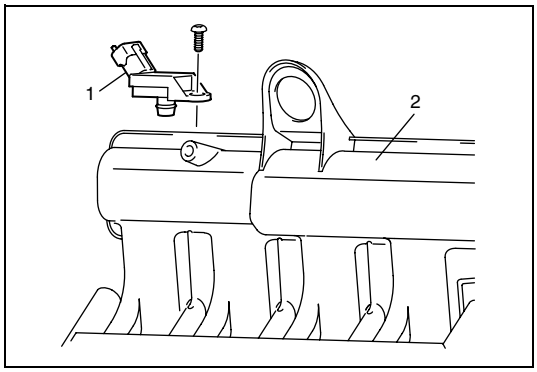

1) Disconnect negative cable at battery.
2) Disconnect connector from boost pressure sensor (1).
3) Remove boost pressure sensor from intake manifold.

Installation

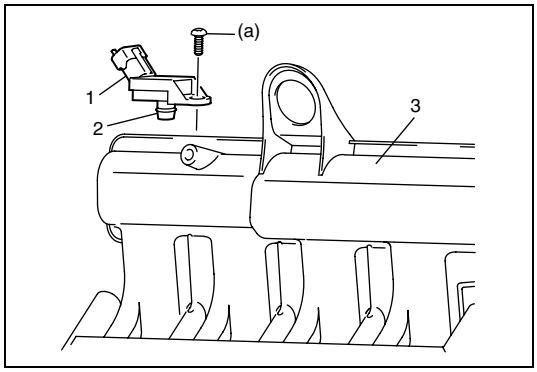

1) Check O-ring (2) of boost pressure sensor (1) deformed or damage.
   If malfunction is found, replace boost pressure sensor.
2) Install boost pressure sensor (1) to intake manifold (3).
   Tighten boost pressure sensor bolt to specified torque.

Tightening torque
Boost pressure sensor bolt
(a): 9 N·m (0.9 kg-m, 6.5 lb-ft)

3) Connect connector to boost pressure sensor securely.
4) Connect negative cable at battery.

Radiator fan control system inspection

WARNING:

Keep hands, tools, and clothing away from engine cooling fan to help prevent personal injury. This fan is electric and can come on whether or not the engine is running. The fan can start automatically in response to the ECT sensor with the ignition switch in the "ON" position.

Check system for operation referring to "C-32, Fan Circuit" in Section 6-3.
If radiator fan fails to operate properly, check relay, radiator fan and electrical circuit.

Fuel pump relay and radiator fan relay 1, 2, 3 inspection

NOTE:

Check for installation position of each relay referring to "Wiring Diagram Manual" described in "Foreword" of this manual.

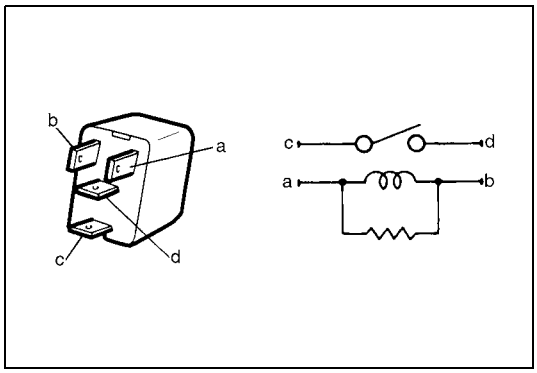

1) Check that there is no continuity between terminal "c" and "d".
   If there is continuity, replace relay.
2) Connect battery positive (+) terminal to terminal "b" of relay.
   Connect battery negative (–) terminal "a" of relay.
   Check continuity between terminal "c" and "d".
   If there is no continuity when relay is connected to the battery, replace relay.

Main relay and fuel heating relay inspection

NOTE:

Check for installation position of each relay referring to "Wiring Diagram Manual" described in "Foreword" of this manual.

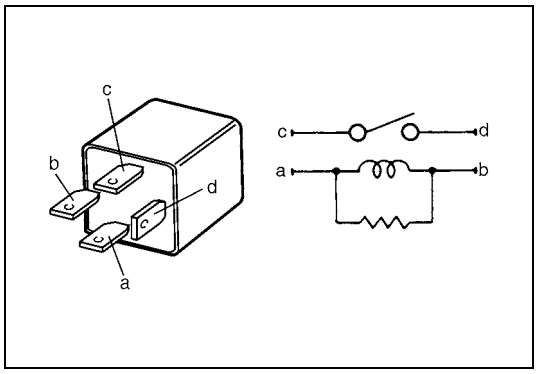

1) Check that there is no continuity between terminal "c" and "d".
   if there is continuity, replace relay.
2) Connect battery positive (+) terminal to terminal "b" of relay.
   Connect battery negative (–) terminal "a" of relay.
   Check continuity between terminal "c" and "d".
   If there is no continuity when relay is connected to the battery, replace relay.

Glow controller removal and installation

Removal

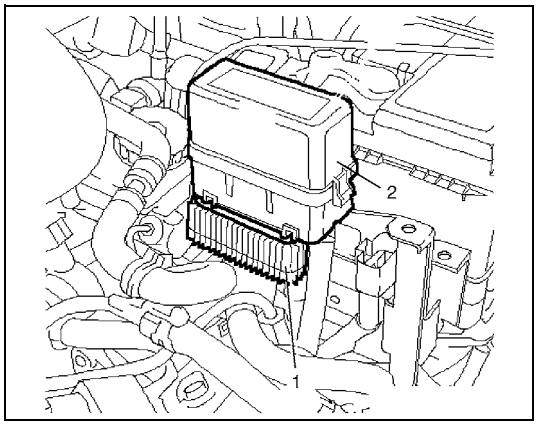

1) Disconnect negative cable at battery.
2) Detach relay box (2) from bracket.
3) Remove glow controller (1) from bracket.
4) Disconnect connector from glow controller.

Installation

Reverse removal procedure for installation.

EGR System

EGR valve assembly component

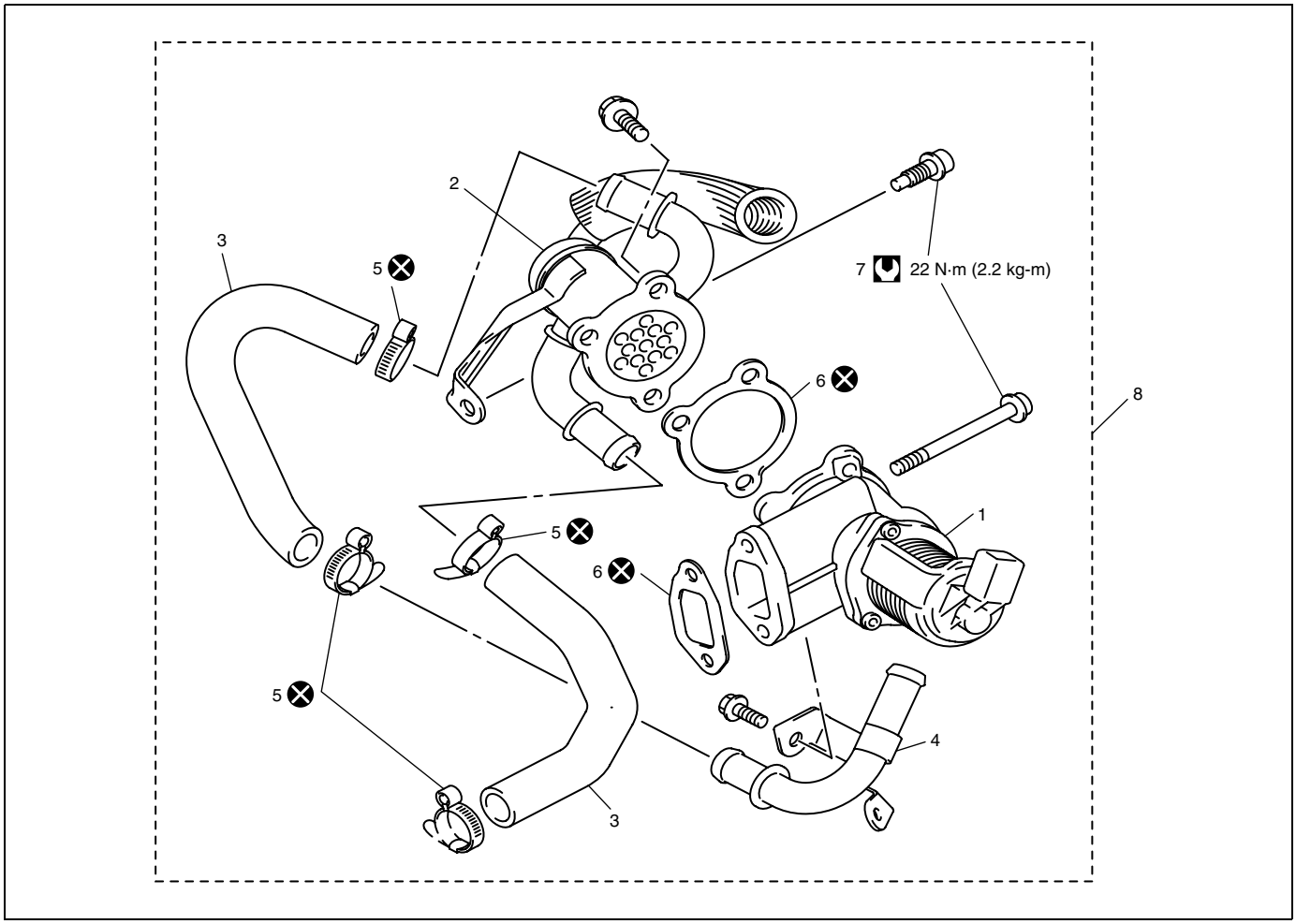

1. EGR valve	3. EGR cooler hose	5. Clamp	7. EGR valve assembly mounting bolt	: Tightening torque
2. EGR cooler	4. EGR cooler pipe	6. Gasket	8. EGR valve assembly	: Do not reuse

EGR valve assembly removal and installation

Removal

1) Disconnect negative cable at battery.
2) Drain cooling system.
3) Remove air cleaner assembly referring to “Air Cleaner Assembly Removal and Installation” in Section 6A3.
4) Remove intercooler outlet No.2 hose referring to “Inter Cooler Components” in Section 6A3.
5) Remove air intake joint referring to “Intake Manifold Removal and Installation” in Section 6A3.
6) Disconnect fuel return hose from common rail.

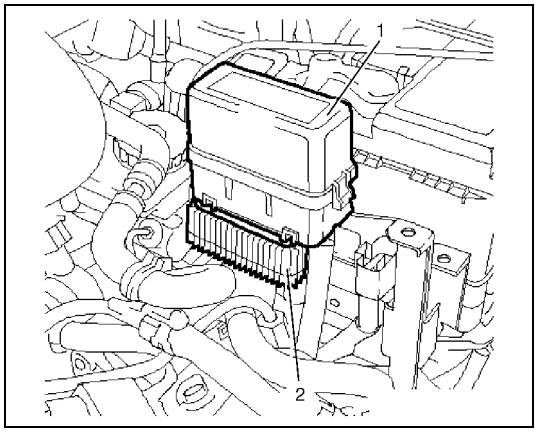

7) Detach relay box (1) and glow controller (2) from bracket.

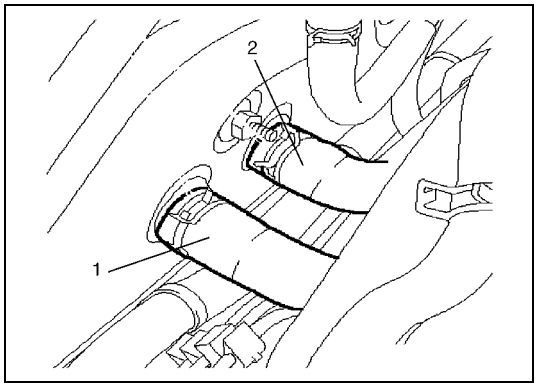

8) Remove heater inlet (1) and outlet No.2 hoses (2) from heater core.

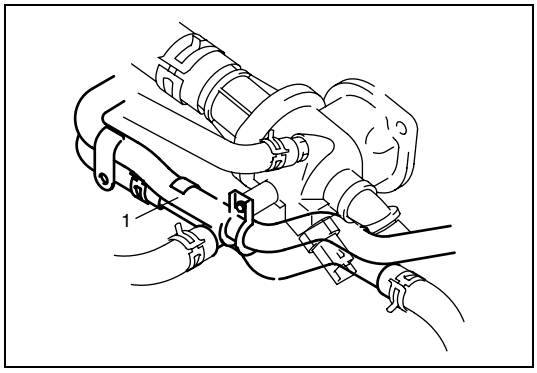

9) Remove heater outlet pipe (1).

10) Disconnect connector from EGR valve.

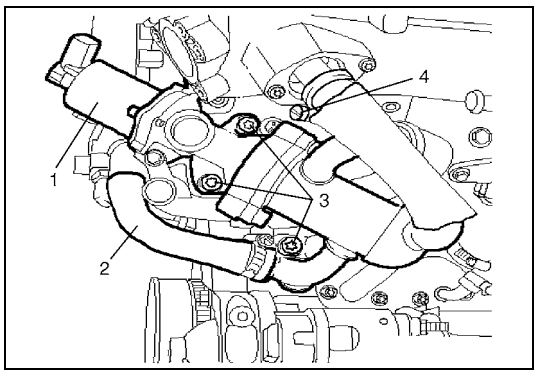

11) Disconnect EGR cooler hose (2) from thermostat housing.
12) Remove EGR valve assembly (1) from cylinder head by removing 3 bolts (3) and clamp (4).

Installation

Reverse removal procedure for installation noting the followings.

- Clean mating surface of EGR valve assembly and cylinder head.
- Use new gaskets.

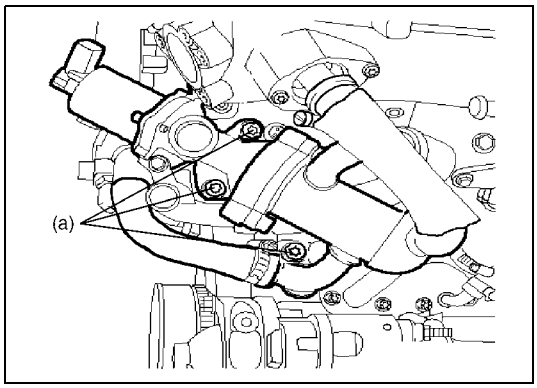

- Tighten EGR valve assembly mounting bolts to specified torque.

Tightening torque
EGR valve assembly mounting bolt
(a): 22 N·m (2.2 kg-m, 16.0 lb-ft)

- Use new cooler hose clamps.
- Install air intake joint referring to “Intake Manifold Removal and Installation” in Section 6A3.
- Install intercooler outlet No.2 hose referring to “Inter Cooler Components” in Section 6A3.
- Install air cleaner assembly referring to “Air Cleaner Assembly Removal and Installation” in Section 6A3.
- Refill cooling system referring to “Cooling System Flush and Refill” in Section 6B3.
- Check cooling system leakage referring to “Cooling System Inspection and Service” in Section 6B3.

Required Service Material

Recommended SUZUKI Material or Specification	Use
Loctite omnifit 100M spezial	• To apply to thread part of ECT sensor.

Tightening Torque Specification

Fastening part	Tightening torque		
	N•m	kg-m	lb-ft
Vacuum pump bolt	5 N·m (0.5 kg-m, 4.0 lb-ft) and then 20 N·m (2.0 kg-m, 14.5 lb-ft)		
Glow plug	9	0.9	6.5
Fuel injector bracket bolt	20	2.0	14.5
High pressure pipe union nut (fuel injector side)	24	2.4	17.5
High pressure pipe union nut (common rail side)	28	2.8	20.5
Common rail bolt	25	2.5	18.0
High pressure supply pipe union nut (fuel injector side)	24	2.4	17.5
High pressure supply pipe union nut (common rail side)	28	2.8	20.5
Injection pump bolt	15	1.5	11.0
Accelerator pedal mounting nut	9	0.9	6.5
Fuel pressure sensor	35	3.5	25.5
Fuel pressure regulator bolt	5	0.5	4.0
ECT sensor	34	3.4	24.5
CMP sensor bolt	7	0.7	5.0
Boost pressure sensor bolt	9	0.9	6.5
EGR valve assembly mounting bolt	22	2.2	16.0

Special Tool

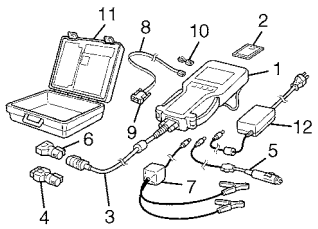

Tech 2 kit (SUZUKI scan tool)
(See NOTE)

NOTE:

This kit includes the following items.
1. Tech 2, 2. PCMCIA card, 3. DLC cable, 4. SAE 16/19 adapter, 5. Cigarette cable, 6. DLC loopback adapter, 7. Battery power cable, 8. RS232 cable, 9. RS232 adapter, 10. RS232 loopback connector, 11. Storage case, 12. Power supply

SECTION 6G3

CRANKING SYSTEM (Z13DT ENGINE)

WARNING:

For vehicles equipped with a Supplemental Restraint (Air Bag) System:

- **Service on and around the air bag system components or wiring must be performed only by an authorized SUZUKI dealer. Refer to "System Components and Wiring Location View and Connections" under "General Description" in Section 10B in order to confirm whether you are performing service on or near the air bag system components or wiring. Please observe all WARNINGS and "Service Precautions" under "On-Vehicle Service" in Section 10B before performing service on or around the air bag system components or wiring. Failure to follow WARNINGS could result in unintentional activation of the system or could render the system inoperative. Either of these two conditions may result in severe injury.**
- **Technical service work must be started at least 90 seconds after the ignition switch is turned to the "LOCK" position and the negative cable is disconnected from the battery. Otherwise, the system may be activated by reserve energy in the Sensing and Diagnostic Module (SDM).**

CONTENTS

General Description 6G3-2
Cranking System Circuit Diagram 6G3-2
Diagnosis 6G3-2
Cranking System Symptom Diagnosis 6G3-2
Cranking System Test 6G3-4
Pull-in test 6G3-4
Hold-in test 6G3-4
Plunger and pinion return test 6G3-4
No-load performance test 6G3-5
ON-Vehicle Service 6G3-6
Starting Motor Dismounting and Remounting 6G3-6
Dismounting 6G3-6
Remounting 6G3-6
Tightening Torque Specification 6G3-6

General Description

Cranking System Circuit Diagram

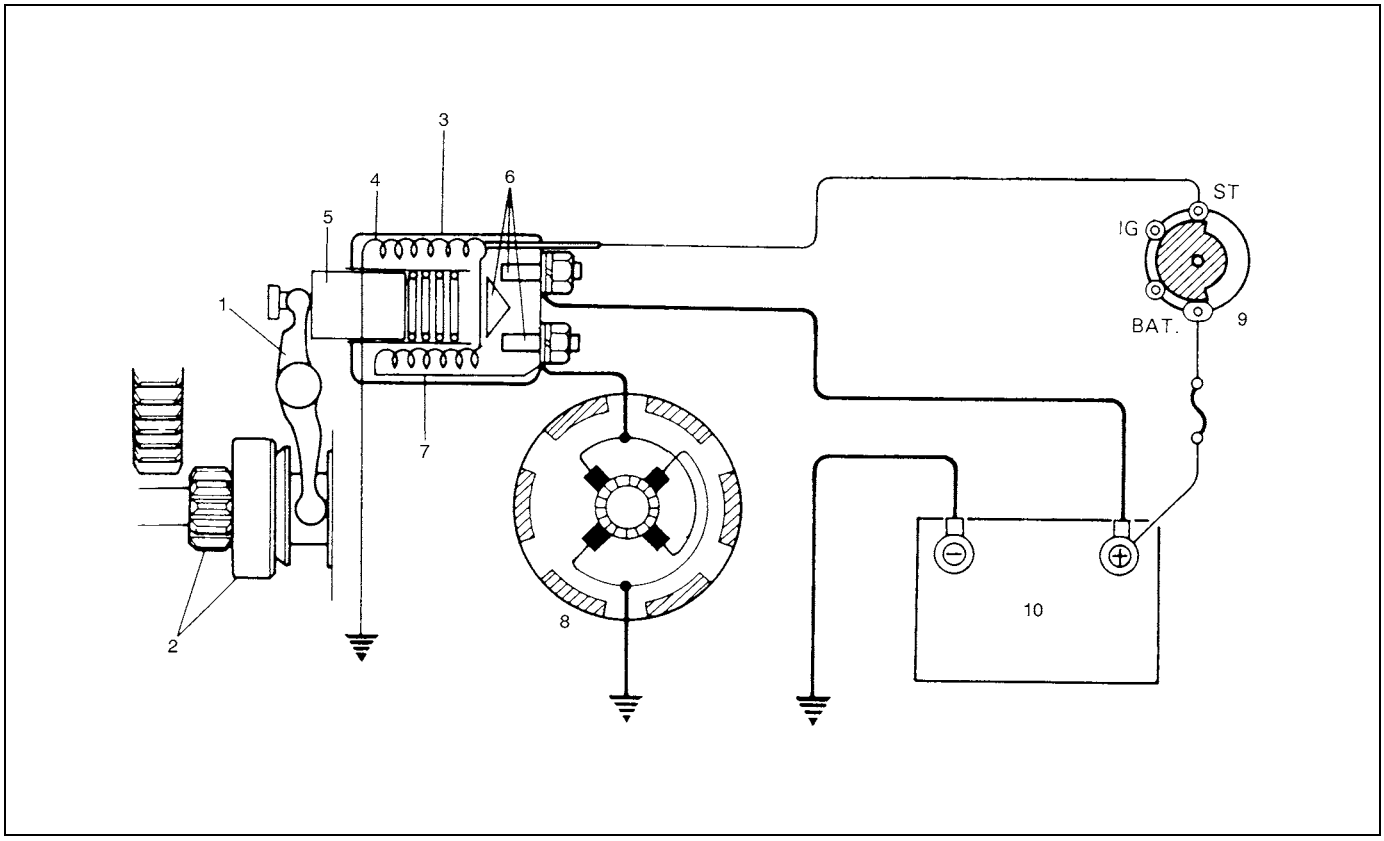

1. Pinion drive lever	5. Plunger	9. Ignition & Starter switch
2. Pinion & Over-running clutch	6. Magnetic switch contacts	10. Battery
3. Magnetic switch	7. Pull-in coil	
4. Hold-in coil	8. Starting motor	

Diagnosis

Cranking System Symptom Diagnosis

Possible symptoms due to starting system trouble would be as follows:

- Starting motor does not run (or runs slowly)
- Starting motor runs but fails to crank engine
- Abnormal noise is heard

Proper diagnosis must be made to determine exactly where the cause of each trouble lies.....in battery, wiring harness, (including starting motor switch), starting motor or engine.

Do not remove motor just because starting motor does not run. Check following items and narrow down scope of possible causes.

1) Condition of trouble
2) Tightness of battery terminals (including ground cable connection on engine side) and starting motor terminals
3) Discharge of battery
4) Mounting of starting motor

Condition	Possible Cause	Correction
Motor not running (No operating sound of magnetic switch)	Battery run down	Recharge battery.
	Battery voltage too low due to battery deterioration	Replace battery.
	Poor contact in battery terminal connection	Retighten or replace.
	Loose grounding cable connection	Retighten.
	Fuse set loose or blown off	Tighten or replace.
	Poor contacting action of ignition switch and magnetic switch	Replace.
	Lead wire coupler loose in place	Retighten.
	Open-circuit between ignition switch and magnetic switch	Repair.
	Open-circuit in pull-in coil	Replace starting motor.
	Brushes are seating poorly or worn down	Replace starting motor.
	Poor sliding of plunger and/or pinion	Replace starting motor.
Motor not running (Operating sound of magnetic switch heard)	Battery run down	Recharge battery.
	Battery voltage too low due to battery deterioration	Replace battery.
	Loose battery cable connections	Retighten.
	Burnt main contact point, or poor contacting action of magnetic switch	Replace starting motor.
	Brushes are seating poorly or worn down	Replace starting motor.
	Weakened brush spring	Replace starting motor.
	Burnt commutator	Replace starting motor.
	Layer short-circuit of armature	Replace starting motor.
	Crankshaft rotation obstructed	Repair.
Starting motor running but too slow (small torque) (If battery and wiring are satisfactory, inspect starting motor)	Insufficient contact of magnetic switch main contacts	Replace starting motor.
	Layer short-circuit of armature	Replace starting motor.
	Disconnected, burnt or worn commutator	Replace starting motor.
	Worn brushes	Replace starting motor.
	Weakened brush springs	Replace starting motor.
	Burnt or abnormally worn end bush	Replace starting motor.
Starting motor running, but not cranking engine	Worn pinion tip	Replace starting motor.
	Poor sliding of over-running clutch	Replace starting motor.
	Over-running clutch slipping	Replace starting motor.
	Worn teeth of ring gear	Replace flywheel.
Noise	Abnormally worn bush	Replace starting motor.
	Worn pinion or worn teeth of ring gear	Replace starting motor or flyweel.
	Poor sliding of pinion (failure in return movement)	Replace starting motor.
	Worn internal or planetary gear teeth	Replace starting motor.
	Lack of oil in each part	Replace starting motor.
Starting motor does not stop running	Fused contact points of magnetic switch	Replace starting motor.
	Short-circuit between turns of magnetic switch coil (layer short-circuit)	Replace starting motor.
	Failure of returning action in ignition switch	Replace.

Cranking System Test

CAUTION:
Each test must be performed within 3 – 5 seconds to avoid coil from burning.

Pull-in test

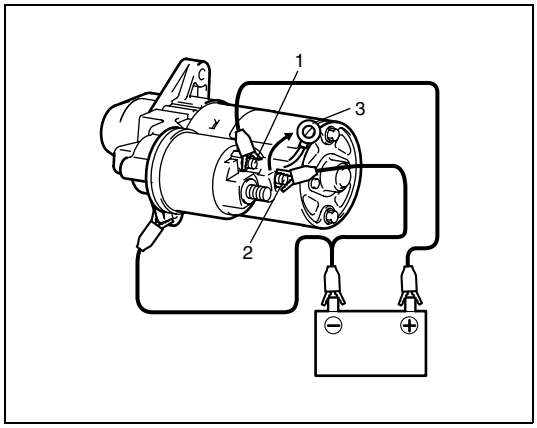

Connect battery to magnetic switch as shown.
Check that plunger and pinion move outward.
If plunger and pinion don't move, replace starting motor.

NOTE:
Before testing, disconnect lead wire (3) from terminal M (2).

1. Terminal "S"

Hold-in test

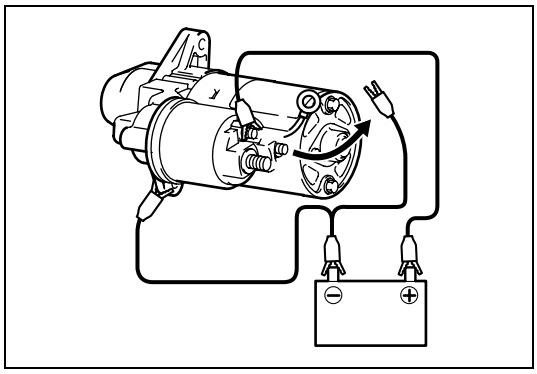

While connected as above with plunger out, disconnect negative lead from terminal "M".
Check that plunger and pinion remain out.
If plunger and pinion return inward, replace starting motor.

Plunger and pinion return test

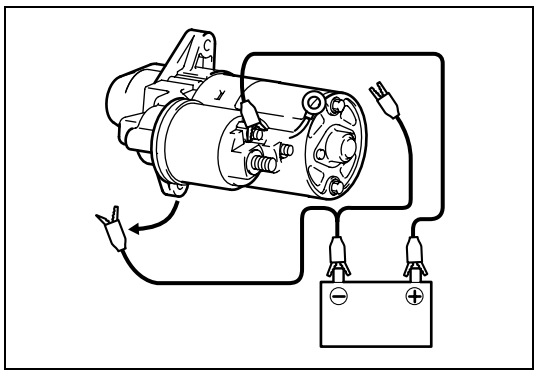

Disconnect negative lead from starting motor body.
Check that plunger and pinion return inward.
If plunger and pinion don't return, replace starting motor.

No-load performance test

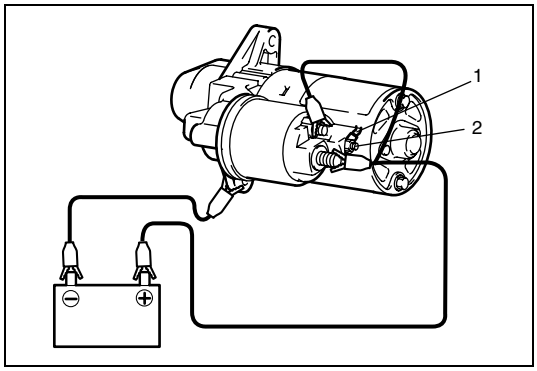

Connect lead wire (1) to terminal M (2).
Connect battery to starting motor as shown.
Check that starting motor rotates smoothly and steadily with pinion moving out.
If check result is not satisfactory, replace starting motor.

ON-Vehicle Service

Starting Motor Dismounting and Remounting

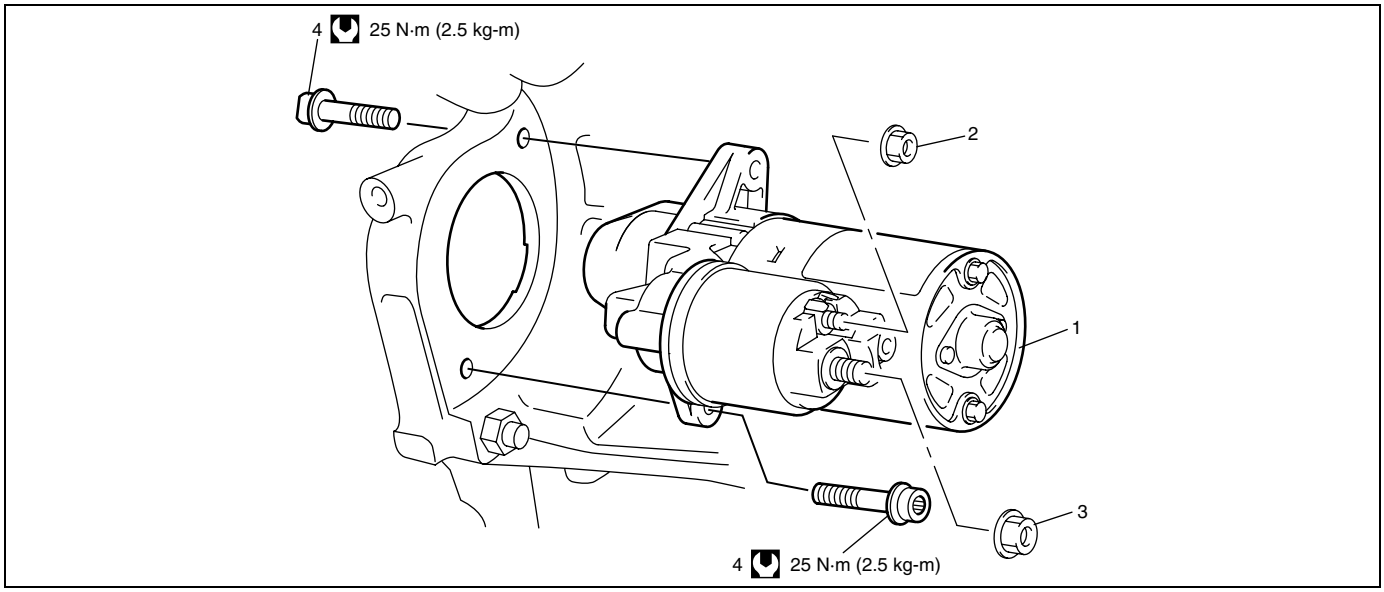

1. Starting motor	3. Battery cable nut	Tightening torque
2. Magnetic switch lead wire nut	4. Starting motor mount bolt	

Dismounting

1) Disconnect negative cable at battery.
2) Remove battery and battery tray, if necessary.
3) Pull out the rubber lid from transmission case for removing starting motor mount bolt.
4) Remove starting motor mount bolt (upper side).

NOTE:

Make sure that starting motor mount bolt (upper side) does not fall into transmission case.

5) Disconnect magnetic switch lead wire and battery cable from starting motor terminals.
6) Remove starting motor mount bolt (lower side).
7) Remove starting motor.

Remounting

Reverse the dismounting procedure noting the following.

- Make sure that starting motor mount bolt (upper side) does not fall into transmission case.
- Tighten starting motor mount bolts to specified torque.

Tightening torque
Starting motor mount bolt: 25 N·m (2.5 kg-m, 18.0 lb-ft)

Tightening Torque Specification

Fastening part	Tightening torque		
	N•m	kg-m	lb-ft
Starting motor mount bolt	25	2.5	18.0

SECTION 6H3

CHARGING SYSTEM (Z13DT ENGINE)

WARNING:

For vehicles equipped with a Supplemental Restraint (Air Bag) System:

- **Service on and around the air bag system components or wiring must be performed only by an authorized SUZUKI dealer. Refer to "System Components and Wiring Location View and Connectors" under "General Description" in Section 10B in order to confirm whether you are performing service on or near the air bag system components or wiring. Please observe all WARNINGS and "Service Precautions" under "On-Vehicle Service" in Section 10B before performing service on or around the air bag system components or wiring. Failure to follow WARNINGS could result in unintentional activation of the system or could render the system inoperative. Either of these two conditions may result in severe injury.**
- **Technical service work must be started at least 90 seconds after the ignition switch is turned to the "LOCK" position and the negative cable is disconnected from the battery. Otherwise, the system may be activated by reserve energy in the Sensing and Diagnostic Module (SDM).**

CONTENTS

General Description 6H3-2
- Battery Description 6H3-2
  - Carrier and hold-down 6H3-2
  - Electrolyte freezing 6H3-2
  - Sulfation 6H3-2
  - Built-in indicator (if equipped) 6H3-2
  - Care of battery 6H3-3
- Generator Description 6H3-4

Diagnosis 6H3-5
- Battery Inspection 6H3-5
  - Visual inspection 6H3-5
- Generator Symptom Diagnosis 6H3-5
  - Charging indicator lamp operation 6H3-5
  - Undercharged battery 6H3-6

On-Vehicle Service 6H3-7
- Jump Starting in Case of Emergency 6H3-7
  - With auxiliary (booster) battery 6H3-7
  - With charging equipment 6H3-7
- Battery Dismounting and Remounting 6H3-8
  - Dismounting 6H3-8
  - Handling 6H3-8
  - Remounting 6H3-8
- Generator belt Inspection 6H3-8
- Generator Dismounting and Remounting ... 6H3-9

Specification 6H3-10
- Battery 6H3-10
- Generator 6H3-10

Tightening Torque Specification 6H3-10

General Description

Battery Description

The battery has three major functions in the electrical system.

- It is a source of electrical energy for cranking the engine.
- It acts as a voltage stabilizer for the electrical system.
- It can, for a limited time, provide energy when the electrical load exceeds the output of the generator.

Carrier and hold-down

The battery carrier should be in good condition so that it will support the battery securely and keep it level.
Before installing the battery, the battery carrier and hold-down clamp should be clean and free from corrosion and make certain there are no parts in carrier.
To prevent the battery from shaking in its carrier, the hold-down bolts should be tight enough but not over-tightened.

Electrolyte freezing

The freezing point of electrolyte depends on its specific gravity. Since freezing may ruin a battery, it should be protected against freezing by keeping it in a fully charged condition. If a battery is frozen accidentally, it should not be charged until it is warmed.

Sulfation

If the battery is allowed to stand for a long period in discharged condition, the lead sulfate becomes converted into a hard, crystalline substance, which will not easily turn back to the active material again during the subsequent recharging. “Sulfation” means the result as well as the process of that reaction. Such a battery can be revived by very slow charging and may be restored to usable condition but its capacity is lower than before.

Built-in indicator (if equipped)

The battery has a built-in temperature compensated indicator at the top of the battery. This indicator is to be used with the following diagnostic procedure. When checking the indicator, make sure that the battery has a clean top. A light may be needed in some poorly-lit areas.

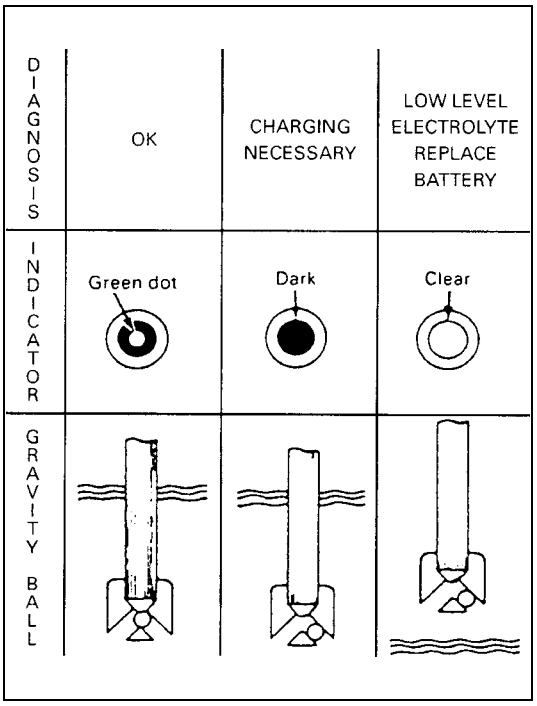

Three types of indication available under normal operation are as follows.

- Green Dot
  Battery is sufficiently charged for testing.
- Dark
  Battery must be charged before testing.
  If there is a cranking complaint, battery should be tested as described in “Diagnosis” section. Charging and electrical systems should also be checked at this time.
- Clear or Light Yellow
  This means that fluid level is below the bottom of hydrometer. Its possible cause is excessive or prolonged charging, a broken case, excessive tipping or normal battery deterioration. When the battery is found in such condition, it is possible that high charging voltage is caused by the faulty charging system and therefore, charging and electrical systems need to be checked. If there is a trouble in cranking and its cause lies in the battery, it should be replaced.

Care of battery

WARNING:

- **Never expose battery to open flame or electric spark because of battery generate gas which is flammable and explosive.**
- **Do not allow battery fluid to contact eyes, skin, fabrics, or painted surfaces as fluid is a corrosive acid. Flush any contacted area with water immediately and thoroughly.**
- **Batteries should always be kept out of reach of children.**

1) The battery is a very reliable component, but needs periodical attentions.
   - Keep the battery carrier clean
   - Prevent rust formation on the terminal posts
   - Keep the electrolyte up to the upper level uniformly in all cells.
   - When keeping battery on vehicle over a long period of time, follow instructions given below.
     – Weekly, start the engine and run it until it reaches normal operating temperature with engine speed of 2000 to 3000 rpm. Make sure all electric switches are off before storing the vehicle.
     – Recharge the battery twice a month to prevent it from discharging excessively. This is especially important when ambient temperature is low.
     The battery discharges even when it is not used, while vehicles are being stored. Battery electrolyte can freeze and battery case can crack at cold ambient condition if battery is not properly charged.
2) Keep the battery cable connections clean.
   The cable connections, particularly at the positive (+) terminal post, tend to become corroded. The product of corrosion, or rust, on the mating faces of conductors resists the flow of current.
   Clean the terminals and fittings periodically to ensure good metal-to-metal contact, and grease the connections after each cleaning to protect them against rusting.
3) Be always in the know as to the state of charge of the battery. The simplest way to tell the state of charge is to carry out a hydrometer test. The hydrometer is an instrument for measuring the specific gravity (S.G.) of the battery electrolyte. The S.G. of the electrolyte is indicative of the state of charge.

Generator Description

The generator is a small and high performance type with an IC regulator incorporated.
The internal components are connected electrically as shown below figure.

The generator features are as follows:

- Solid state regulator is mounted inside the generator.
- All regulator components are enclosed into a solid mold.
- This unit along with the brush holder assembly is attached to the rear housing.
- The IC regulator uses integrated circuits and controls the voltage produced by the generator, and the voltage setting cannot be adjusted.
- The generator rotor bearings contain enough grease to eliminate the need for periodic lubrication. Two brushes carry current through the two slip rings to the field coil mounted on the rotor, and under normal conditions will provide long period of attention-free service.
- The stator windings are assembled on the inside of a laminated core that forms part of the generator frame.

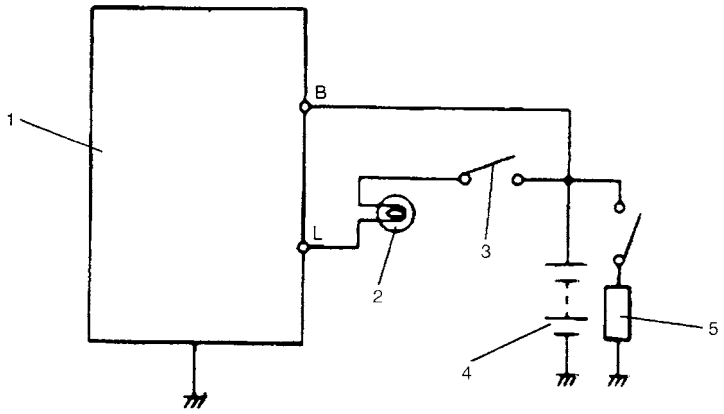

1. Generator with regulator assembly	3. Ignition switch	5. Load
2. Charge indicator light	4. Battery	

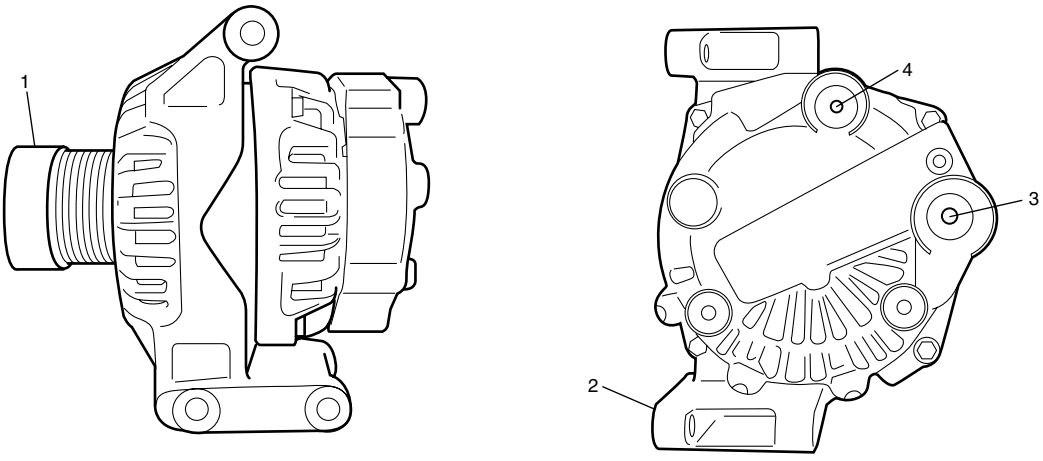

1. Pulley	3. “B” terminal
2. Ground	4. “L” terminal

Diagnosis

Battery Inspection

Visual inspection

Check for obvious damage, such as cracked or broken case or cover, that could permit loss of electrolyte. If obvious damage is noted, replace battery. Determine cause of damage and correct as needed.

Generator Symptom Diagnosis

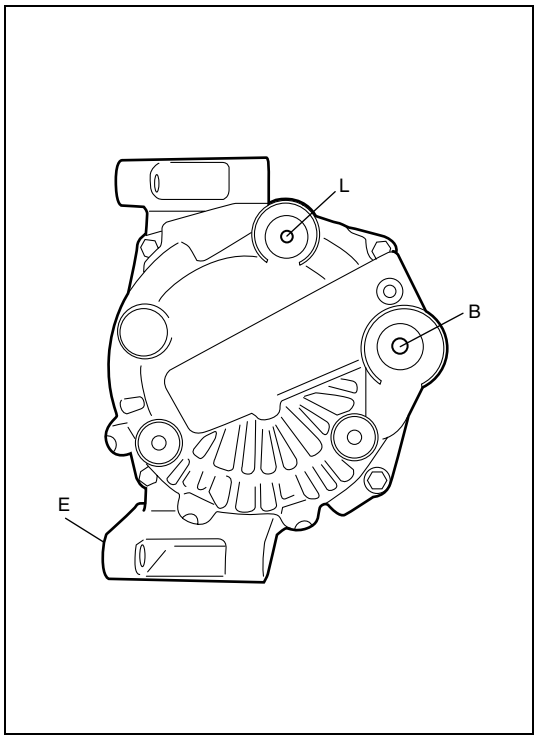

CAUTION:

- **Do not connect any load between L and E.**
- **When connecting charger or booster battery to vehicle battery, refer to "Jump Starting in Case of Emergency" in this section.**

Trouble in charging system will show up as one or more of the following conditions:

1) Faulty indicator lamp operation.
2) An undercharged battery as evidenced by slow cranking or indicator dark.
3) An overcharged battery as evidenced by excessive spewing of electrolyte from vents.

Noise from generator may be caused by loose drive pulley, loose mounting bolts, worn or dirty bearings, defective diode, or defective stator.

B: Generator output (Battery terminal)
E: Ground
L: Lamp terminal

Charging indicator lamp operation

Condition	Possible Cause	Correction
Charge light does not light with ignition ON and engine off	Fuse blown	Check fuse.
	Indicator lamp (LED) faulty for RM413D	Replace combination meter.
	Light burned out for RB413D	Replace light.
	Wiring connection loose	Tighten loose connection.
	IC regulator or field coil faulty	Replace generator.
Charge light does not go out with engine running (battery requires frequent recharging)	Drive belt loose or worn	Adjust or replace drive belt.
	IC regulator or generator faulty	Check charging system.
	Wiring faulty	Repair wiring.
Noise from radio	Condenser faulty	Replace generator.

Undercharged battery

This condition, as evidenced by slow cranking or low specific gravity can be caused by one or more of the following conditions even though indicator lamp may be operating normal.

Following procedure also applies to cars with voltmeter and ammeter.

- Make sure that undercharged condition has not been caused by accessories left on for extended period of time.
- Check drive belt for proper tension.
- If battery defect is suspected, refer to “Battery Description” in this section.
- Inspect wiring for defects. Check all connections for tightness and cleanliness, battery cable connections at battery, starting motor and ignition ground cable.

On-Vehicle Service

Jump Starting in Case of Emergency

With auxiliary (booster) battery

CAUTION:

If vehicle is manual transmission model and has a catalytic converter, do not push or tow it to start. Damage to its emission system and/or to other parts may result.

Both booster and discharged battery should be treated carefully when using jumper cables. Follow procedure outlined below, being careful not to cause sparks.

WARNING:

- **Departure from these conditions or procedure described below could result in:**
  - **Serious personal injury (particularly to eyes) or property damage from such causes as battery explosion, battery acid, or electrical burns.**
  - **Damage to electronic components of either vehicle.**
- **Remove rings, watches, and other jewelry. Wear approved eye protection.**
- **Be careful so that metal tools or jumper cables do not contact positive battery terminal (or metal in contact with it) and any other metal on vehicle, because a short circuit could occur.**

WARNING:

Do not connect negative cable directly to negative terminal of dead battery.

1) Set parking brake and place NEUTRAL on manual transmission. Turn off ignition, turn off lights and all other electrical loads.
2) Check electrolyte level. If it is below low level line, add distilled water.
3) Attach end of one jumper cable to positive terminal of booster battery and the other end of the same cable to positive terminal of discharged battery. (Use 12-volt battery only to jump start engine).
4) Attach one end of the remaining negative cable to negative terminal of booster battery, and the other end to a solid engine ground (such as exhaust manifold) at least 45 cm (18 in.) away from battery of vehicle being started.
5) Start engine of vehicle with booster battery and turn off electrical accessories. Then Start engine of the vehicle with discharged battery.
6) Disconnect jumper cables in the exact reverse order.

With charging equipment

CAUTION:

When jump starting engine with charging equipment, be sure equipment used is 12-volt and negative ground. Do not use 24-volt charging equipment. Using such equipment can cause serious damage to electrical system or electronic parts.

Battery Dismounting and Remounting

Dismounting

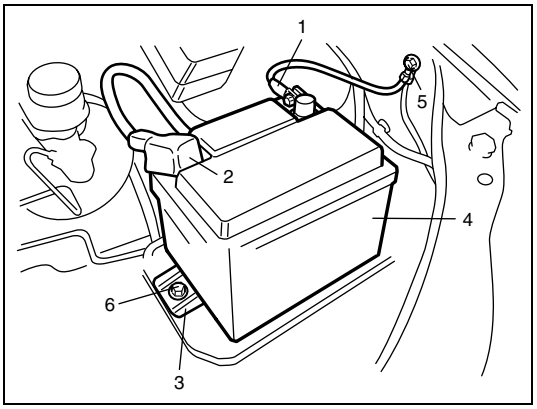

1) Disconnect negative cable (1).
2) Disconnect positive cable (2).
3) Remove retainer (3).
4) Remove battery (4).

5.	Body ground bolt
6.	Retainer bolt

Handling

When handling battery, following safety precautions should be followed:

- Hydrogen gas is produced by battery. A flame or spark near battery may cause the gas to ignite.
- Battery fluid is highly acidic. Avoid spilling on clothing or other fabric. Any spilled electrolyte should be flushed with large quantity of water and cleaned immediately.

Remounting

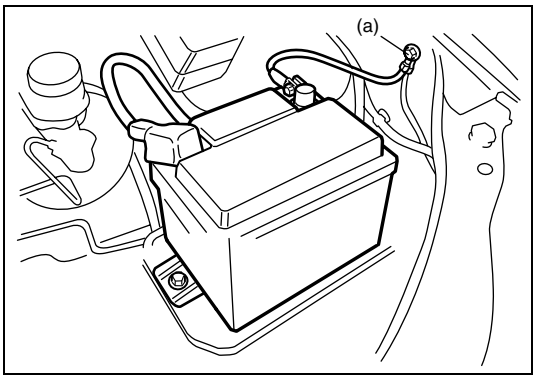

1) Reverse removal procedure.
2) Torque battery cables to specification.

NOTE:

Check to be sure that ground cable has enough clearance to hood panel by terminal.

Tightening torque
Body ground bolt (a): 8.0 N·m (0.8 kg-m, 6.0 lb-ft)

Generator belt Inspection

For removal, installation and inspection referring to “Water Pump / Generator Drive Belt Removal and Installation” and “Water Pump / Generator Drive Belt Tension Inspection” in Section 6B3.

Generator Dismounting and Remounting

1) Disconnect negative cable at battery.
2) Dismount in order as shown in the figure.
3) Reverse dismounting procedure for remounting.

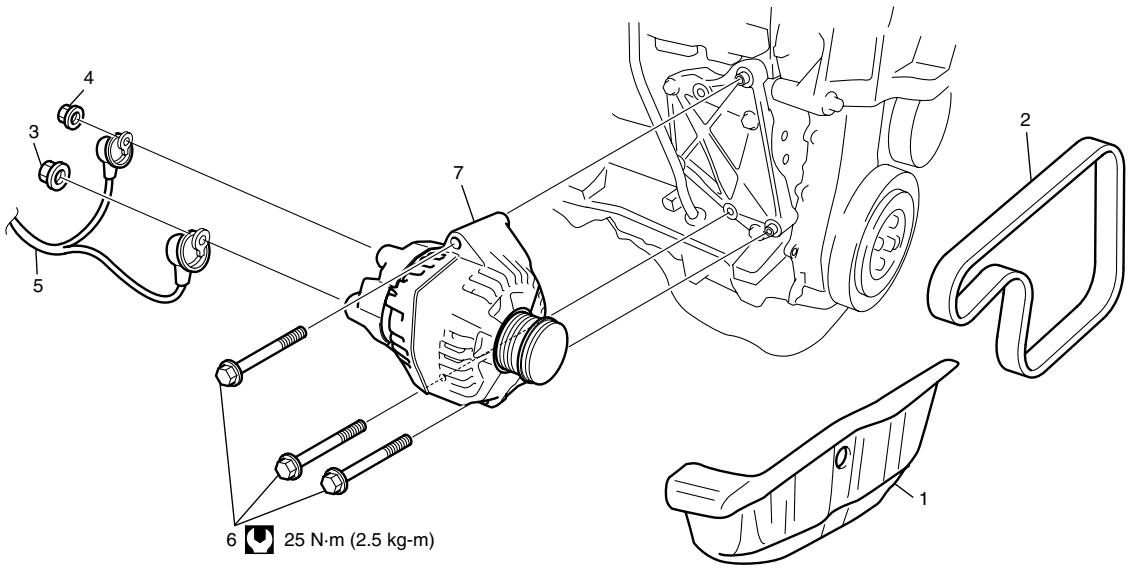

1. Splash cover	3. "B" terminal nut	5. "B" and "L" terminals wire	7. Generator
2. Generator belt	4. "L" terminal nut	6. Generator bolt	Tightening torque

Specification

Battery

Battery type	CCA 370A
Nominal output	12 V
Rated capacity	60 Ah/20 h
	46 Ah/5 h

Generator

Generator Type	90 A type
Rated voltage	12 V
Nominal output	90 A
Polarity	Negative ground
Rotation	Clockwise viewed from pulley side

Tightening Torque Specification

Fastening part	Tightening torque		
	N•m	kg-m	lb-ft
Body ground bolt	8	0.8	6.0
Generator bolt	25	2.5	18.0

SECTION 6K3

EXHAUST SYSTEM (Z13DT ENGINE)

CONTENTS

General Description 6K3-2
Maintenance 6K3-2
On-Vehicle Service 6K3-3
Exhaust System Components 6K3-3
Exhaust Manifold Removal and Installation 6K3-5
Exhaust Manifold Inspection 6K3-5
Catalytic Converter Removal and Installation 6K3-5
Exhaust Pipe Removal and Installation 6K3-5
Tightening Torque Specification 6K3-5

General Description

The exhaust system consists of an exhaust manifold, three-way catalytic converter (TWC), a turbo charger, exhaust pipe, a muffler and seal, gasket and etc.
The three-way catalytic converter is an emission control device added to the exhaust system to lower the levels of Hydrocarbon (HC), Carbon Monoxide (CO), and Oxides of Nitrogen (NOx) pollutants in the exhaust gas.

Maintenance

WARNING:
To avoid the danger of being burned, do not touch the exhaust system when the system is hot. Any service on the exhaust system should be performed when the system is cool.

At every interval of periodic maintenance service, and when vehicle is raised for other service, check exhaust system as follows:

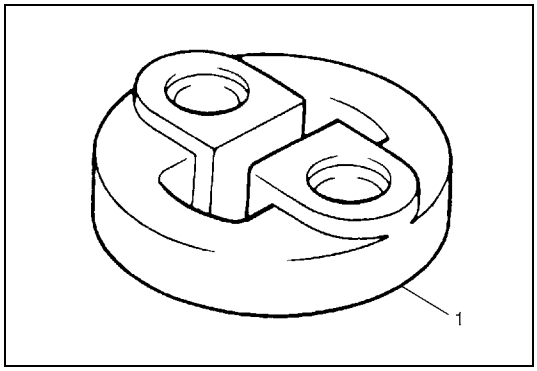

- Check rubber mountings (1) for damage, deterioration, and out of position.
- Check exhaust system for leakage, loose connection, dent and damage.
- If bolts or nuts are loosened, tighten them to specified torque referring to “Exhaust System Components” in this section.
- Check nearby body areas damaged, missing, or mispositioned part, open seam, hole connection or any other defect which could permit exhaust fumes to seep into vehicle.

- Make sure that exhaust system components have enough clearance from underbody to avoid overheating and possible damage to passenger compartment carpet.
- Any defect should be fixed at once.

On-Vehicle Service

Exhaust System Components

WARNING:

To avoid the danger of being burned, do not touch the exhaust system when the system is hot. Any service on the exhaust system should be performed when the system is cool.

For RM413D

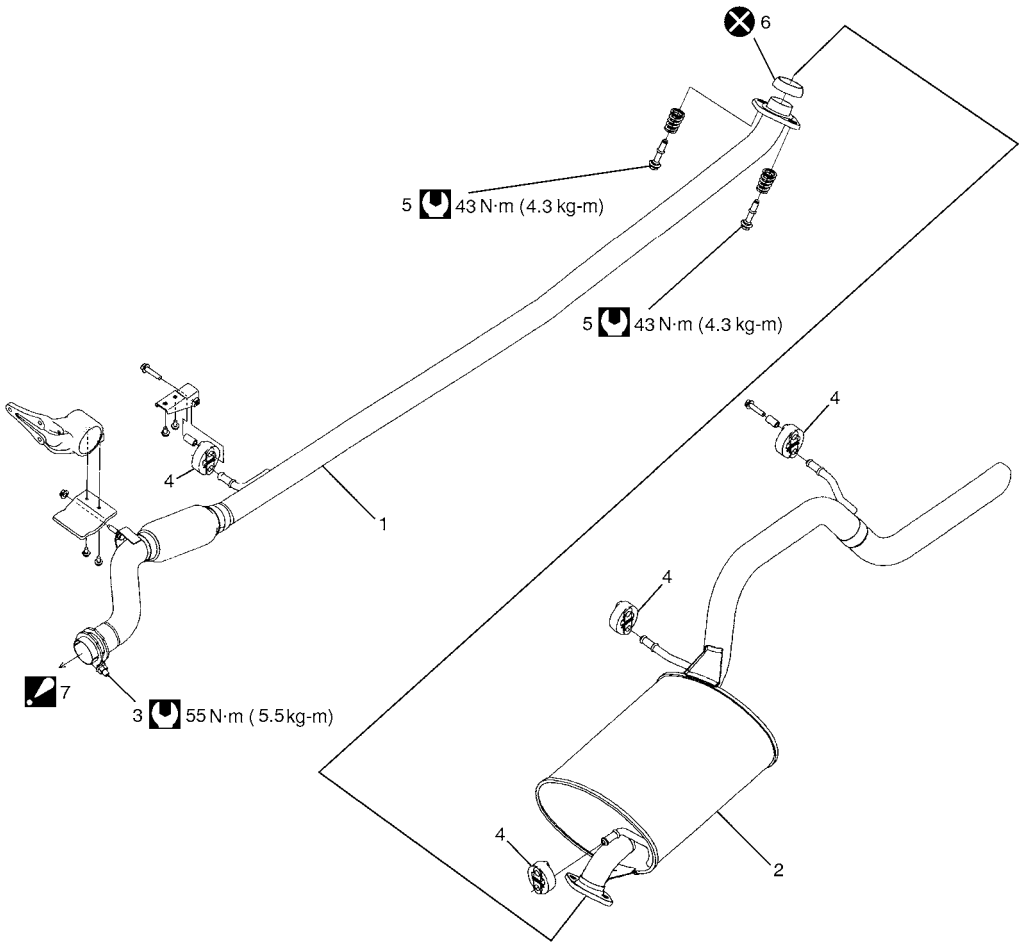

1. Exhaust pipe	4. Mounting	7. To catalytic converter : For detail of service, refer to "Turbocharger Removal and Installation" in Section 6A3.
2. Muffler	5. Exhaust pipe bolt	Tightening torque
3. Clamp bolt	6. Seal ring	Do not reuse.

For RB413D

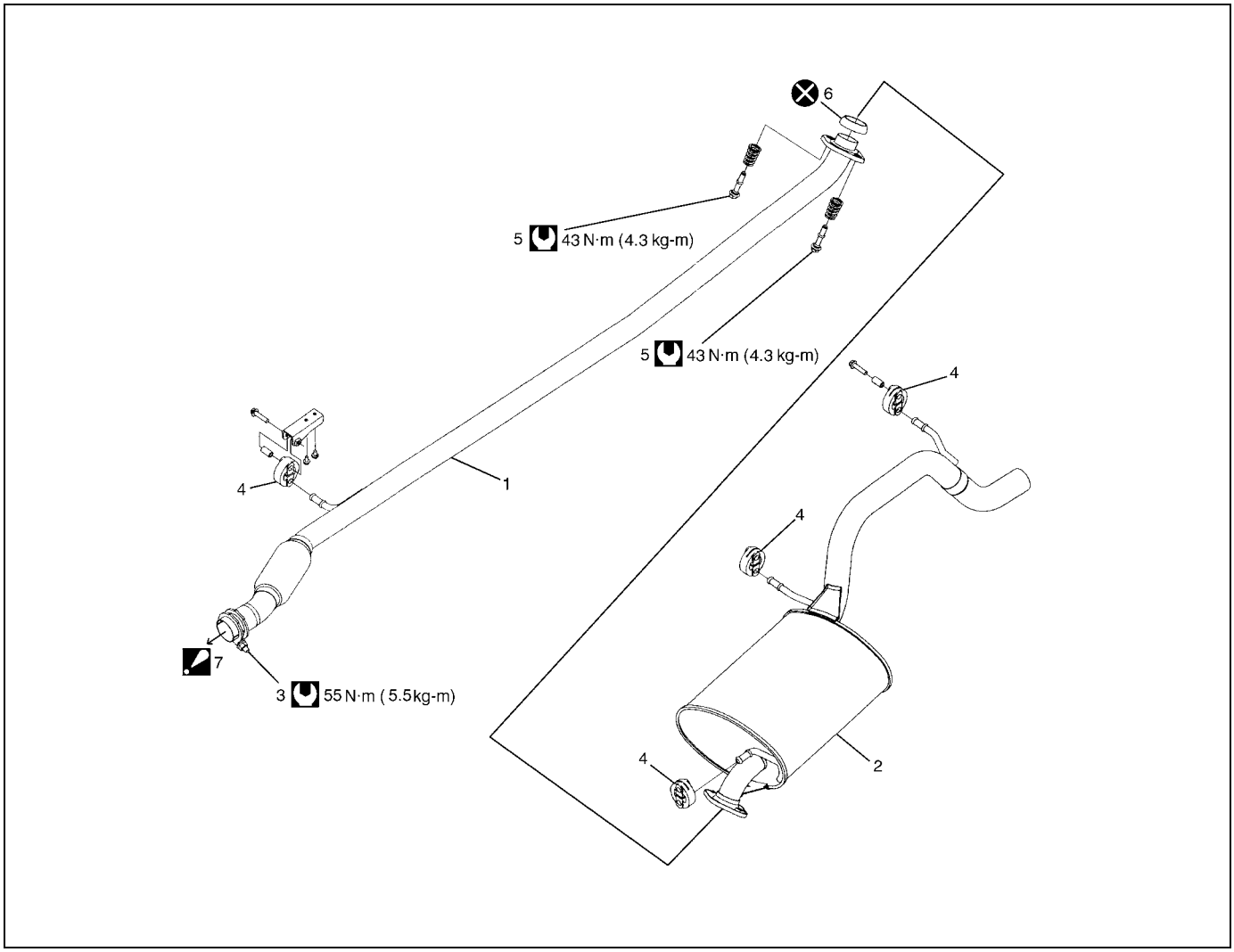

1. Exhaust pipe	4. Mounting	7. To catalytic converter : For detail of service, refer to "Turbocharger Removal and Installation" in Section 6A3.
2. Muffler	5. Exhaust pipe bolt	Tightening torque
3. Clamp bolt	6. Seal ring	Do not reuse.

Exhaust Manifold Removal and Installation

Removal and installation

Refer to “Exhaust Manifold Removal and Installation” in Section 6A3.

Exhaust Manifold Inspection

Check gasket and seal for deterioration or damage.
Replace them as necessary.

Catalytic Converter Removal and Installation

Removal and installation

Refer to “Turbocharger Removal and Installation” in Section 6A3.

Exhaust Pipe Removal and Installation

Removal and installation

For replacement of exhaust pipe, be sure to hoist vehicle and observe “Warning” under “Maintenance” in this section and the following.

CAUTION:

Exhaust manifold have three way catalytic converter in it, it should not be exposed to any impulse. Be careful not to drop it or hit it against something.

- Tighten bolts and nuts to specified torque when reassembling referring to “Exhaust System Components” in this section.
- After installation, start engine and check each joint of exhaust system for leakage.

Tightening Torque Specification

Fastening part	Tightening torque		
	N•m	kg-m	lb-ft
Exhaust No.1 pipe bolts	43	4.3	31.0
Clamp bolt	55	5.5	40.0
Catalytic converter bolt	25	2.5	18.0

SECTION 7A3

MANUAL TRANSAXLE (Z13DT ENGINE MODEL)

WARNING:

For vehicles equipped with a Supplemental Restraint (Air Bag) System:

- **Service on and around the air bag system components or wiring must be performed only by an authorized SUZUKI dealer. Refer to "Air Bag System Components and Wiring Location View" under "General Description" in air bag system section in order to confirm whether you are performing service on or near the air bag system components or wiring. Please observe all WARNINGS and "Service Precautions" under "On-Vehicle Service" in air bag system section before performing service on or around the air bag system components or wiring. Failure to follow WARNINGS could result in unintentional activation of the system or could render the system inoperative. Either of these two conditions may result in severe injury.**
- **Technical service work must be started at least 90 seconds after the ignition switch is turned to the "LOCK" position and the negative cable is disconnected from the battery. Otherwise, the system may be activated by reserve energy in the Sensing and Diagnostic Module (SDM).**

CONTENTS

General Description 7A3-2
- Manual Transaxle Construction and Servicing 7A3-2
- Transaxle 7A3-3

Diagnosis 7A3-4
- Manual Transaxle Symptom Diagnosis 7A3-4

On-Vehicle Service 7A3-5
- Manual Transaxle Oil Change 7A3-5
- Differential Side Oil Seal Replacement 7A3-6
- Gear Shift Control Lever and Cable Components 7A3-7
- Gear Shift Control Lever and Cable Removal and Installation 7A3-8
- Reverse Lamp Switch Removal and Installation 7A3-9
- Reverse Lamp Switch Inspection 7A3-9
- Transaxle Unit Dismounting and Remounting 7A3-10
- Transaxle Unit Components 7A3-13
- Selector Lever Assembly Removal and Installation 7A3-14
- 5th Gears Removal and Installation 7A3-14
- Gear Selector, Cluster Gear and Main Shaft Removal and Installation 7A3-17
- Cluster Gear & Main Shaft Components 7A3-24
- Main Shaft Disassembly and Assembly 7A3-25
- Cluster Gear & Main Shaft Inspection 7A3-28
- Transaxle Case Disassembly and Assembly 7A3-29
- Differential Components 7A3-32
- Differential Disassembly and Assembly 7A3-33
- Differential Adjustment 7A3-35

Tightening Torque Specification 7A3-36

Required Service Material 7A3-36

Special Tool 7A3-37

General Description

Manual Transaxle Construction and Servicing

The transaxle provides five forward speeds and one reverse speed by means of three synchronizers and three shafts-cluster gear (input shaft), main shaft and reverse gear shaft. All forward gears are in constant mesh, and reverse uses a sliding idler gear arrangement.

The 1st and 2nd speed synchronizer is mounted on main shaft and engaged with main shaft 1st gear or 2nd gear, also the 3rd and 4th speed synchronizer is done on main shaft and engaged with main shaft third gear or 4th gear.

The 5th speed synchronizer on main shaft is engaged with cluster 5th gear mounted on the cluster gear (input shaft).

The double cone synchronizing mechanism are provided to 1st and 2nd gear synchromesh device for high performance of shifting to 1st and 2nd gear.

The main shaft turns the final gear and differential assembly, thereby turning the front drive shafts which are attached to the front wheels.

For servicing, it is necessary to use genuine sealant or its equivalent on mating surfaces of transaxle case which is made of aluminum. The case fastening bolts must be tightened to specified torque by means of torque wrench. It is also important that all parts are thoroughly cleaned with cleaning fluid and air dried before reassembling.

New synchronizer rings are prohibited from being lapped with respective gear cones by using lapping compound before they are assembled.

Transaxle

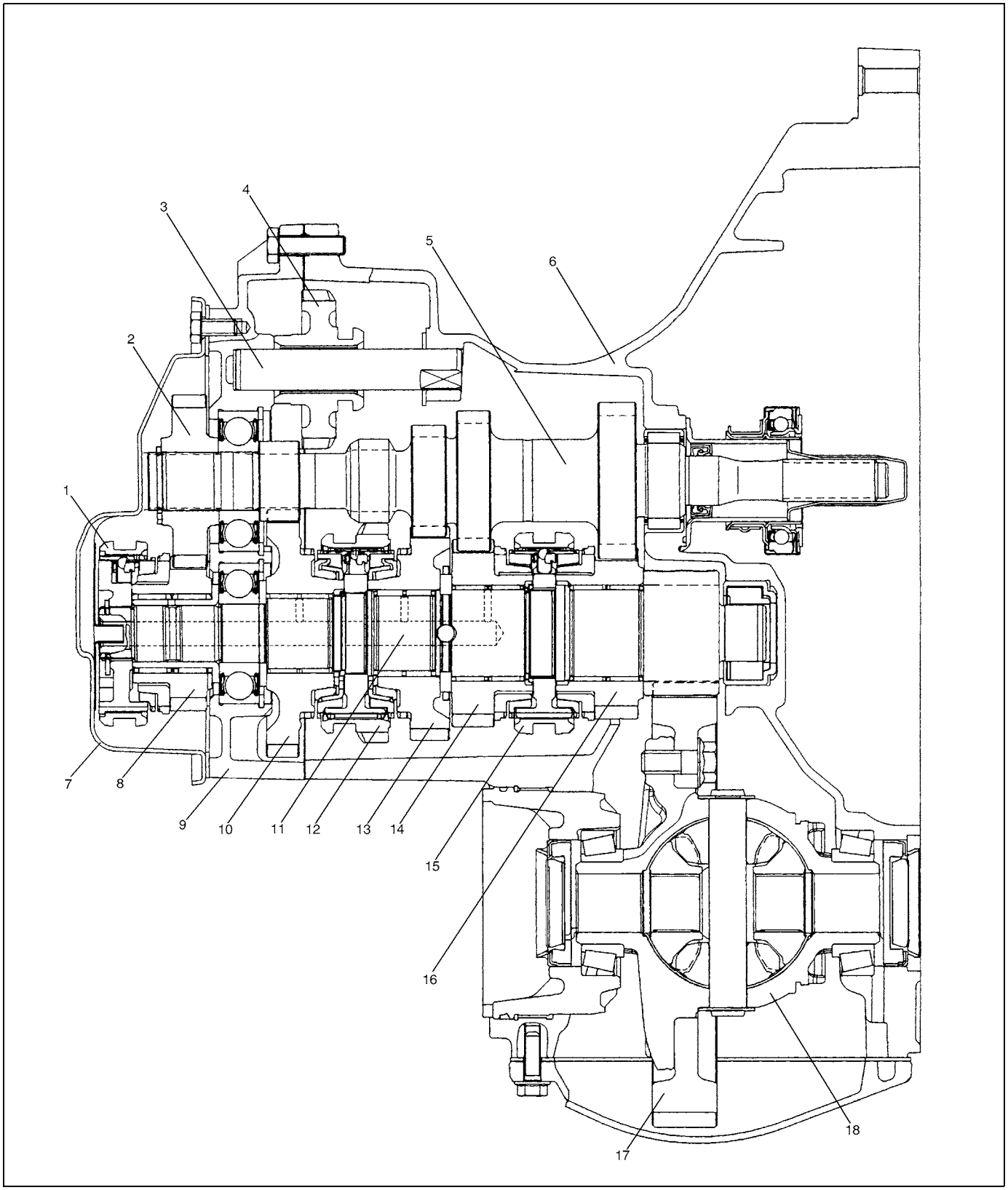

1. 5th gear hub assembly	7. Extension case cover	13. 2nd gear
2. Cluster 5th speed gear	8. 5th gear	14. 3rd gear
3. Reverse gear shaft	9. Extension bearing plate case	15. 3rd & 4th gear hub assembly
4. Reverse gear	10. 1st gear	16. 4th gear
5. Transaxle cluster gear	11. Transaxle main shaft	17. Final gear
6. Transaxle case	12. 1st & 2nd gear hub assembly	18. Differential case

Diagnosis

Manual Transaxle Symptom Diagnosis

Condition	Possible Cause	Correction
Gears slipping out of mesh	Gear shift/select control cables faulty	Replace.
	Worn gear selector rod	Replace.
	Worn gear selector fork or synchronizer sleeve	Replace.
	Worn bearings on transaxle cluster gear or transaxle main shaft	Replace.
	Worn chamfered tooth on sleeve and gear	Replace sleeve and gear.
Hard shifting	Gear shift/select control cables faulty	Replace.
	Inadequate or insufficient lubricant	Replenish.
	Maladjusted clutch cable	Adjust clutch cable.
	Distorted or broken clutch disc	Replace.
	Damaged clutch pressure plate	Replace clutch cover.
	Worn synchronizer ring	Replace.
	Worn chamfered tooth on sleeve or gear	Replace sleeve or gear.
	Worn gear shift/select control cables joint	Replace.
	Distorted shift shaft	Replace.
Noise	Inadequate or insufficient lubricant	Replenish.
	Damaged or worn bearing(s)	Replace.
	Damaged or worn gear(s)	Replace.
	Damaged or worn synchronizer parts	Replace.
	Backlash between bevel pinion and gear faulty	Replace.
	Improper tooth contact in the mesh between bevel pinion and gear	Replace.

On-Vehicle Service

CAUTION:
Do not reuse circlip, spring pin, E-ring, oil seal, gasket, self locking nut and specified parts. Reuse of it can result in trouble.

Manual Transaxle Oil Change

1) Before changing or inspecting oil, be sure to stop engine and lift vehicle horizontally.
2) With vehicle lifted up, check oil level and leakage. If leakage exists, correct it.
3) Remove oil level plug (2) and then drain old oil by removing differential cover (1).
4) Install differential cover (1) with new gasket.

Tightening torque
Differential cover bolt (a): 18 N·m (1.8 kg-m, 13.0 lb-ft)

5) Remove breather plug (3).
6) Fill new specified oil from breather plug hole (4) by specified amount (up to level hole).
7) Tighten oil level plug (2) and breather plug as specified in the following.

Tightening torque
Transaxle oil level plug
(b): 4 N·m (0.4 kg-m, 3.0 lb-ft) and 45° to 180° by the specified procedure

Breather plug
(c): 4 N·m (0.4 kg-m, 3.0 lb-ft) and 180° by the specified procedure

NOTE:

- **It is recommended to use API GL-4 75W-85 gear oil.**
- **Whenever vehicle is hoisted for any service work other than oil change check for oil leakage.**

Transaxle oil API GL-4 (For SAE classification refer to viscosity chart [A])

Transaxle oil capacity
1.6 liters (3.4/2.8 US/Imp·pt)

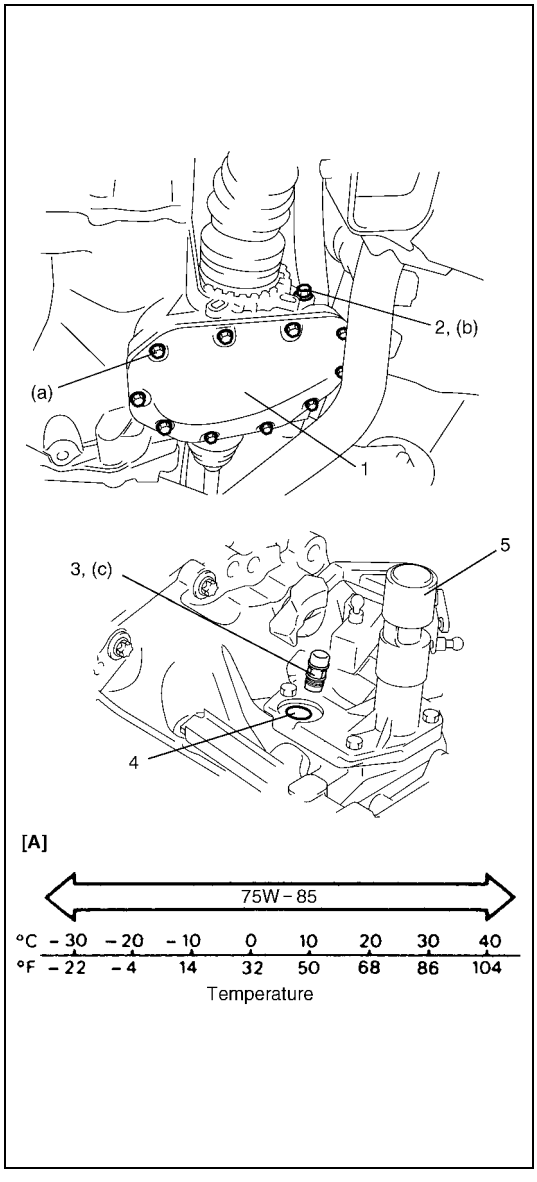

5. Selector lever cover

Differential Side Oil Seal Replacement

1) Drain transaxle oil referring to “Manual Transaxle Oil Change” in this section.
2) Remove front drive shafts referring to “Front Drive Shaft Assembly Removal and Installation” in Section 4A.

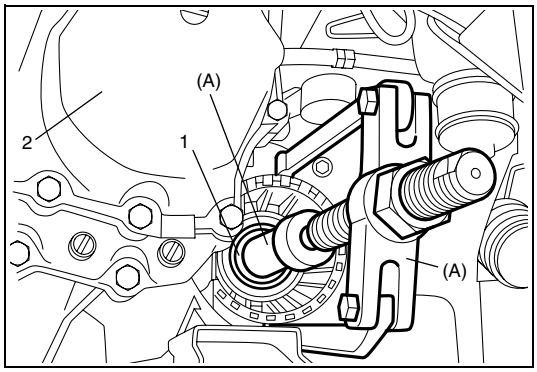

3) Remove oil seals (1) using special tool.

Special tool
(A): 09913-58610

2. Extension case cover

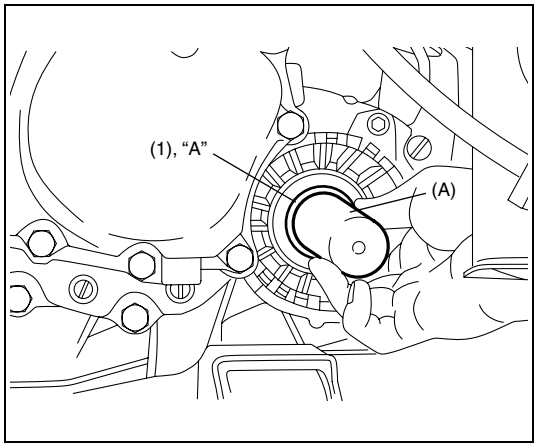

4) Install new oil seals (1) using special tool and hammer.

NOTE:
When installing oil seal, face its spring side inward.

Special tool
(A): 09926-28610

5) Apply grease to oil seal lip and at the same time check drive shaft where oil seal contacts and make sure of its smoothness.

“A”: Grease 99000-25010

6) Install front drive shafts referring to “Front Drive Shaft Assembly Removal and Installation” in Section 4A.
7) Fill transaxle oil as specified referring to “Manual Transaxle Oil Change” in this section, and make sure that oil has been sealed with oil seal.

Gear Shift Control Lever and Cable Components

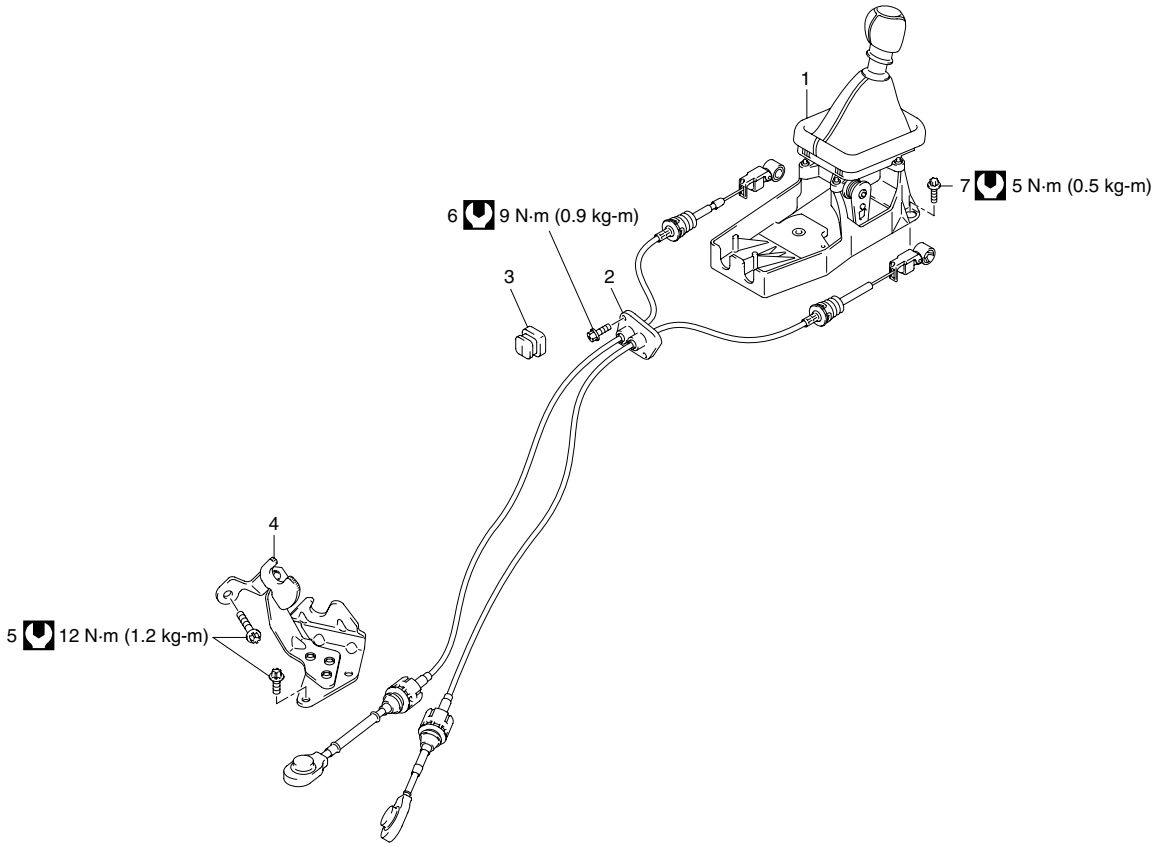

1. Gear shift control lever assembly	4. Cable bracket	7. Gear shift control lever bolt
2. Shift & select cable assembly	5. Cable bracket bolt	Tightening torque
3. Shift control cable seal	6. Cable grommet bolt	

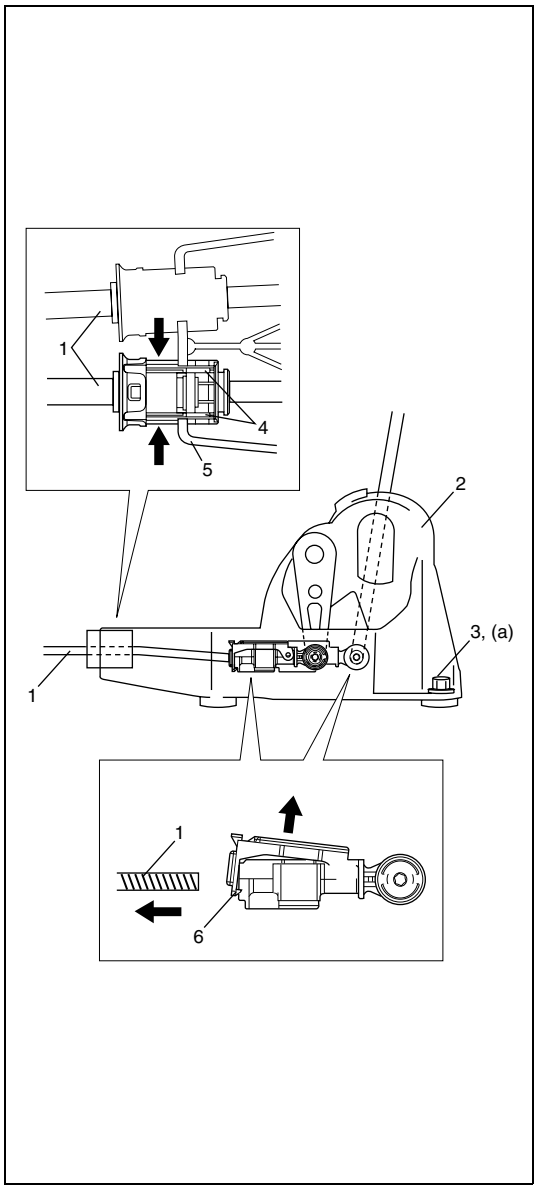

Gear Shift Control Lever and Cable Removal and Installation

Removal

1) Remove console box.
2) Disconnect shift and select cables (1) from gear shift control lever assembly (2).
   a) While pushing claw (4), disconnect cable assembly from bracket (5).
   b) Push up claw (6) of adjuster and pull off cables (1).
3) Remove gear shift control lever bolts (3) and remove gear shift lever assembly (2) from vehicle body.
4) Disconnect shift and select cables (1) from transaxle.
5) After removing cable grommet bolt, take off shift and select cable together with grommet from vehicle body.

Installation

1) Install shift and select cable assembly to vehicle body and then tighten cable grommet bolt to specified torque.

   Tightening torque
   Cable grommet bolt: 9 N·m (0.9 kg-m, 6.5 lb-ft)

2) Install shift and select cable to transaxle.
3) Install gear shift control lever assembly to vehicle body and then tighten gear shift control lever bolt to specified torque.

   Tightening torque
   Gear shift control lever bolt: 5 N·m (0.5 kg-m, 3.5 lb-ft)

4) Attach shift and select cable assembly to bracket.
5) Install shift cable and select cable to each adjuster.

   NOTE:
   Install the shift cable first.

6) Install console box.
7) Confirm that it moves smoothly when shifting into each position.

Reverse Lamp Switch Removal and Installation

Removal

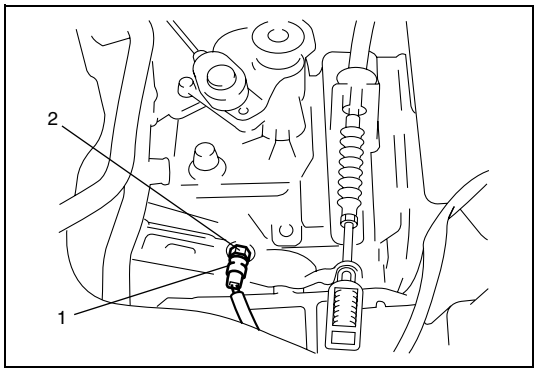

1) Disconnect negative cable at battery.
2) Disconnect reverse lamp switch coupler (1).
3) Remove reverse lamp switch (2).

Installation

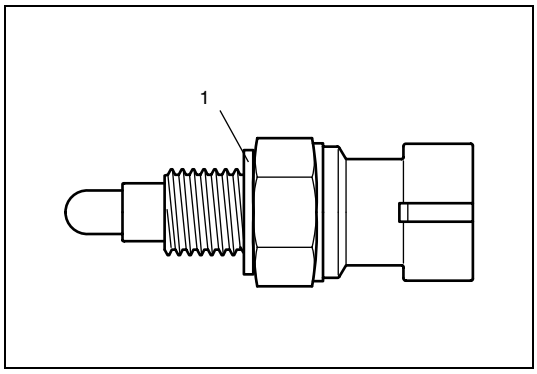

1) Install reverse lamp switch with new seal (1).

   Tightening torque
   Reverse lamp switch: 20 N·m (2.0 kg-m, 15.0 lb-ft)

2) Connect reverse lamp switch coupler.
3) Connect negative cable at battery.
4) Confirm function of back up lamp switch in reverse position by using ohmmeter.

Reverse Lamp Switch Inspection

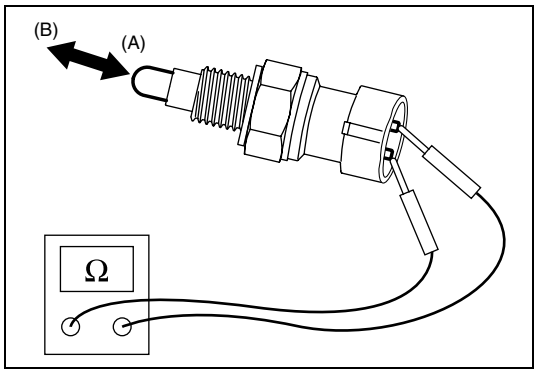

Check reverse lamp switch for function using ohmmeter.

Switch ON (A): Continuity
Switch OFF (B): No continuity

Transaxle Unit Dismounting and Remounting

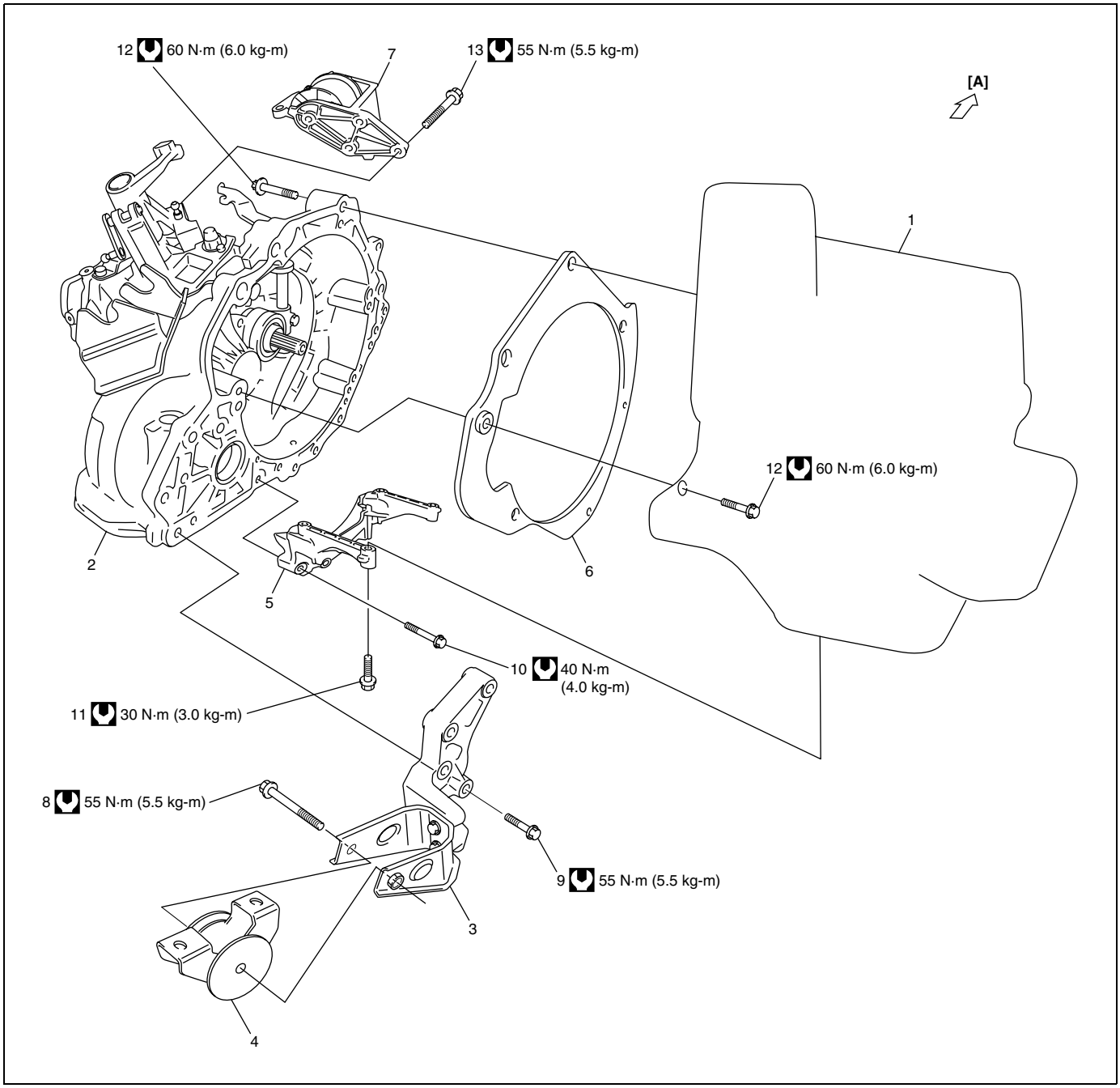

[A]: Forward	5. Transaxle to engine bracket	10. Transaxle to engine bracket No.1 bolt
1. Engine	6. Spacer	11. Transaxle to engine bracket No.2 bolt
2. Transaxle	7. Engine left mounting	12. Transaxle to engine bolt
3. Engine rear mounting bracket	8. Engine rear mounting bolt	13. Engine left mounting bolt
4. Engine rear mounting	9. Engine rear mounting bracket bolt	Tightening torque

Dismounting

1) Disconnect negative cable at battery.
2) Remove battery tray with coolant reservoir.
3) Remove air cleaner and resonator.
4) Remove water pipe bracket and water hoses.
5) Disconnect clutch cable from clutch release shaft and bracket.
6) Disconnect shift and select cables from transaxle and then remove its bracket on transaxle.
7) Undo reverse lamp connector.
8) Support engine using engine hanger.

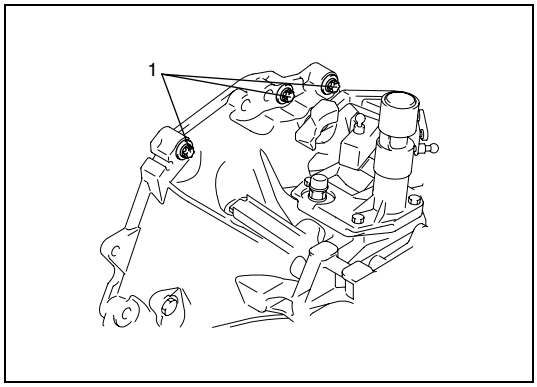

9) Remove transaxle to engine bolts (1). (upper side)
10) Drain transaxle oil referring to “Manual Transaxle Oil Change” in this section.
11) Remove front drive shafts referring to “Front Drive Shaft Assembly Removal and Installation” in Section 4A.
12) Remove exhaust pipe.
13) Remove lower member. (For RM413D)
14) Remove ground cable from transaxle.
15) Remove transaxle to engine bracket.
16) Support transaxle with transmission jack.

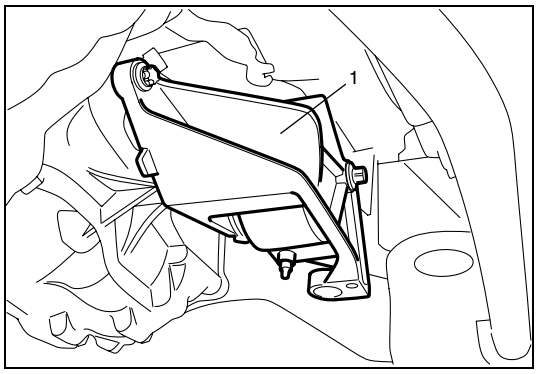

17) Remove engine left mounting with bracket (1).

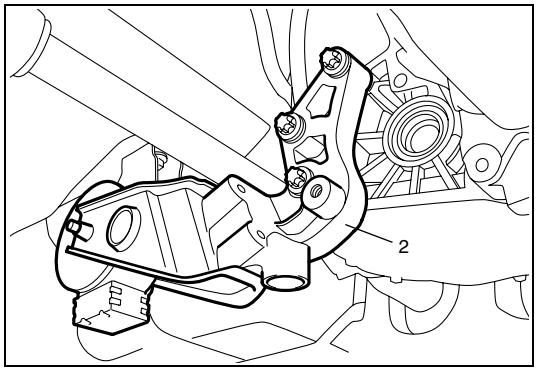

18) Remove engine rear mounting with bracket (2).

19) Remove transaxle to engine bolts. (lower side)
20) Pull transaxle out so as to disconnect cluster gear from clutch disc and then lower it.

Remounting

Reverse dismounting procedure for remounting noting the following.

- Refer to figure at the title of “Transaxle Unit Dismounting and Remounting” for fastener specified torque.
- Set each clamp for wiring securely.
- After connecting clutch cable, be sure to adjust clutch cable nut position referring to “Clutch Cable Adjustment” in Section 7C3.
- Install front drive shafts referring to “Front Drive Shaft Assembly Removal and Installation” in Section 4A.
- Fill transaxle with oil as specified referring to “Manual Transaxle Oil Change” in this section.
- Connect battery and check function of engine, clutch and transaxle.

Transaxle Unit Components

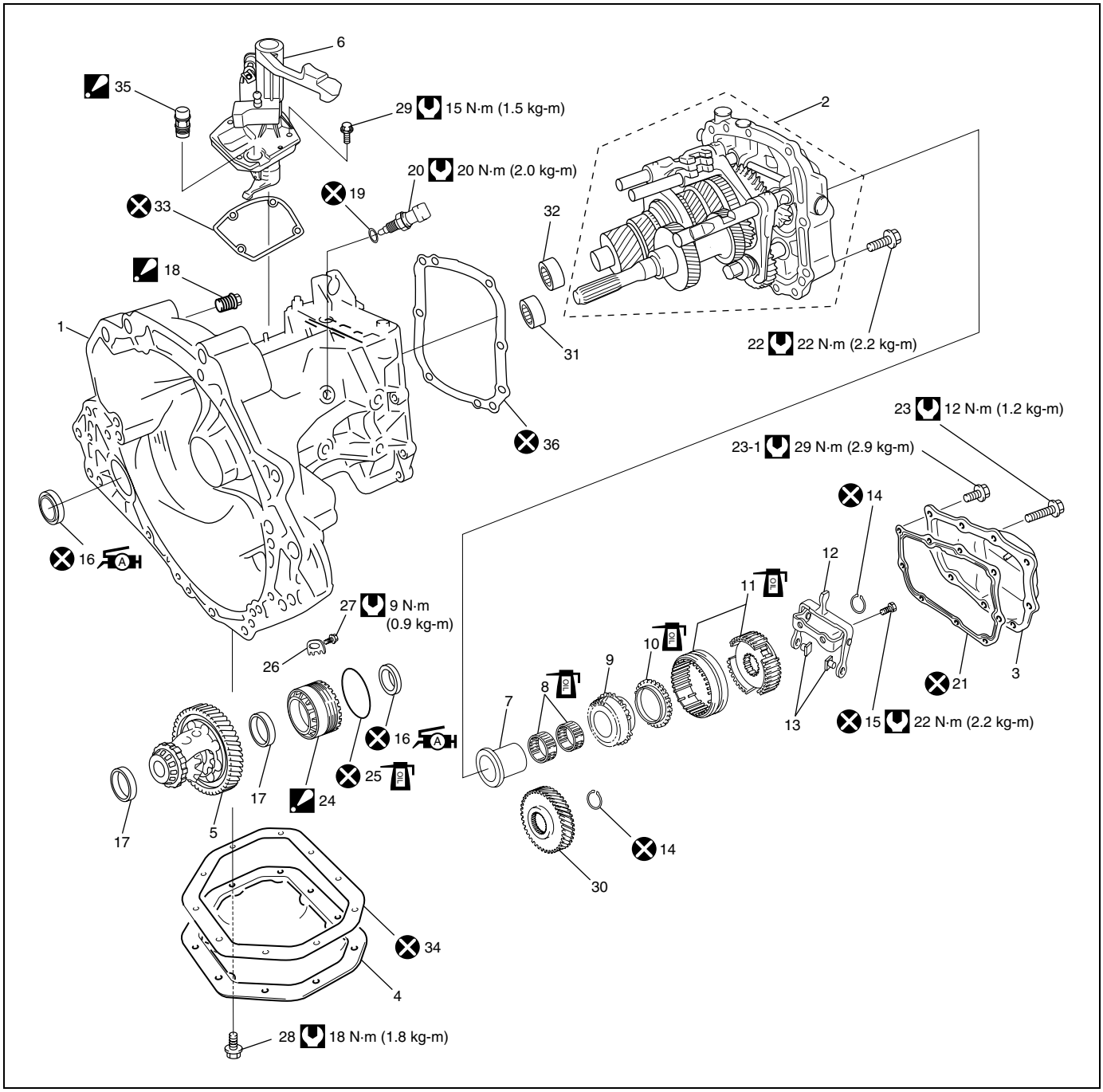

1.	Transaxle case	15.	5th gear selector fork bolt	28.	Differential cover bolt
2.	Transmission end plate	16.	Oil seal : Apply grease 99000-25010 to oil seal lip.	29.	Selector lever cover bolt
3.	Extension case cover	17.	Outer race	30.	Cluster 5th speed gear
4.	Differential cover	18.	Oil level plug : Tighten to 4 N·m (0.4 kg-m) and 45° to 180° by the specified procedure.	31.	Pinion needle bearing
5.	Differential assembly	19.	Reverse lamp switch seal	32.	Main shaft roller bearing
6.	Selector lever cover	20.	Reverse lamp switch	33.	Cover gasket
7.	5th gear inner bearing ring	21.	Transaxle case gasket	34.	Differential cover gasket
8.	5th gear needle bearing	22.	Bearing plate case bolt	35.	Breather plug : Tighten to 4 N·m (0.4 kg-m) and 180° by the specified procedure.
9.	5th speed gear	23.	Extension case cover bolt	36.	Cover gasket
10.	5th gear synchronizer cone	23-1.	Extension case cover bolt (torx)		Tightening torque
11.	5th gear hub assembly	24.	Differential bearing retaining ring : Tighten to 70 N·m (7.0 kg-m), 30° and 15° by the specified procedure.		Do not reuse.
12.	5th gear selector fork	25.	Differential bearing retaining ring seal		Apply transaxle oil.
13.	5th gear selector slider	26.	Retaining ring lock plate		
14.	Snap ring	27.	Lock plate bolt		

Selector Lever Assembly Removal and Installation

Removal

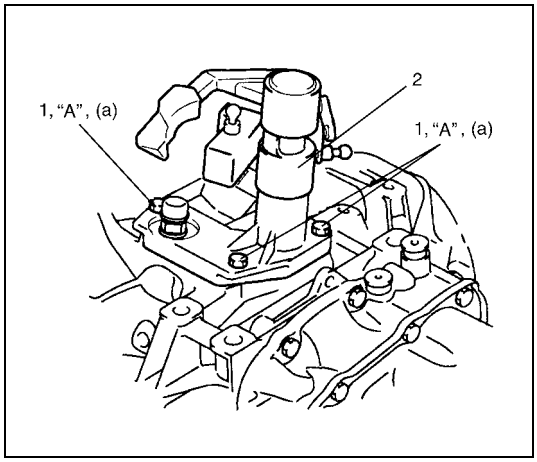

Remove selector lever bolt (1) and then selector lever assembly (2).

Installation

Reverse removal procedure for installation noting the following.

- Do not reuse select lever cover gasket.
- Apply sealant to selector lever cover bolt.
  Tighten cover bolt to specified torque.

"A": Thread lock cement 99000-32110

Tightening torque
Selector lever cover bolt (a): 15 N·m (1.5 kg-m, 11.0 lb-ft)

5th Gears Removal and Installation

Removal

1) Remove extension case cover bolts and take off extension case cover.

CAUTION:
Care should be taken not to distort extension case cover when it is removed from left case.

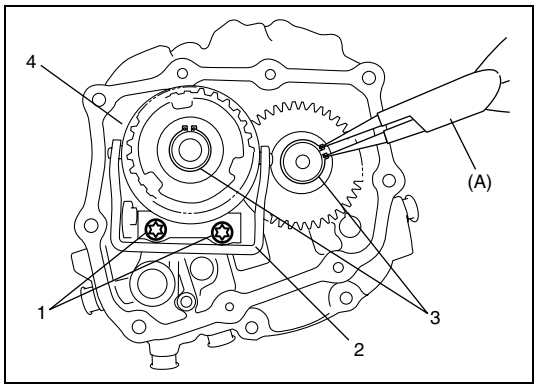

2) Remove 5th gear selector fork bolts (1) and then 5th gear selector fork (2).

NOTE:

If fastening bolts are stiff, heat extension bearing plate case (4) with hot air dryer to approx. 80 °C (176 °F).

3) Remove snap rings (3) using special tool.

Special tool
(A): 09900-06107

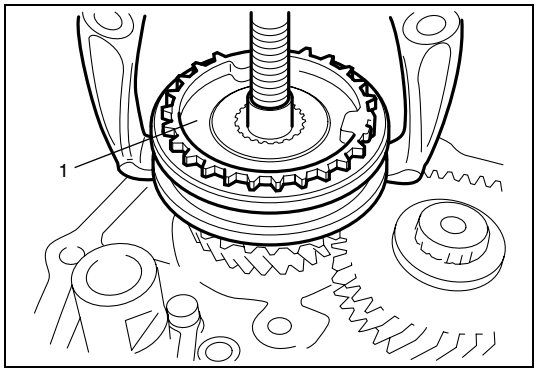

4) Remove 5th gear hub assembly (1) from main shaft using gear puller.
5) Remove 5th gear needle bearing from main shaft.

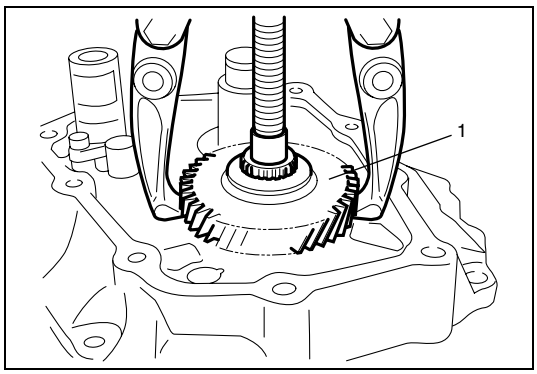

6) Remove cluster 5th gear (1) from cluster gear using gear puller.

Installation

NOTE:

Coat all parts with transaxle oil before assembly.

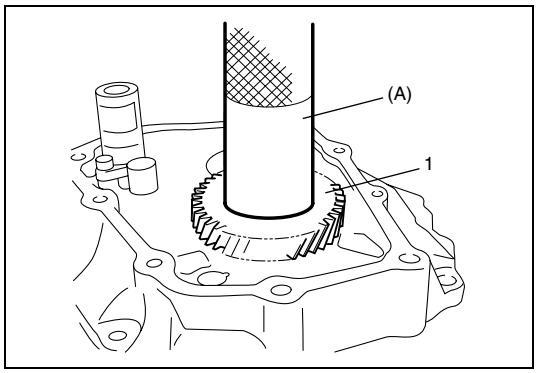

1) Install cluster 5th gear (1) to cluster gear using special tool.

Special tool
(A): 09913-84510

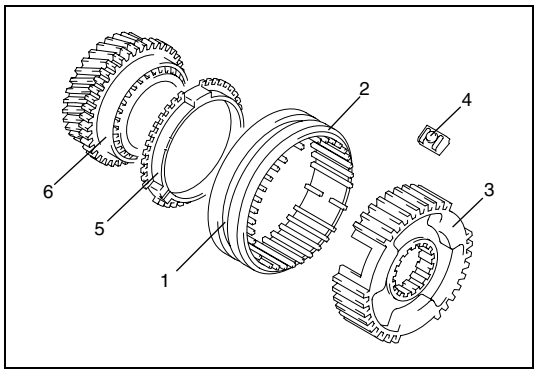

2) Assemble 5th gear hub assembly (hub (3), sleeve (1) and keys (4)) as shown in figure.

2. chamfer
5. Synchronizer ring
6. 5th gear

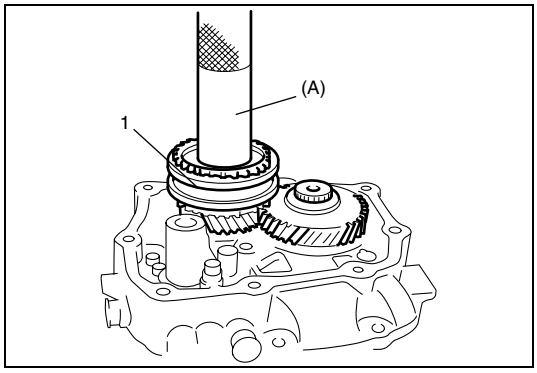

3) Install needle bearing, 5th gear and synchronizer ring onto main shaft.
Drive 5th gear assembly onto main shaft facing chamfer of sleeve to extension case cover side, using special tool and hammer.

Special tool
(A): 09913-70123

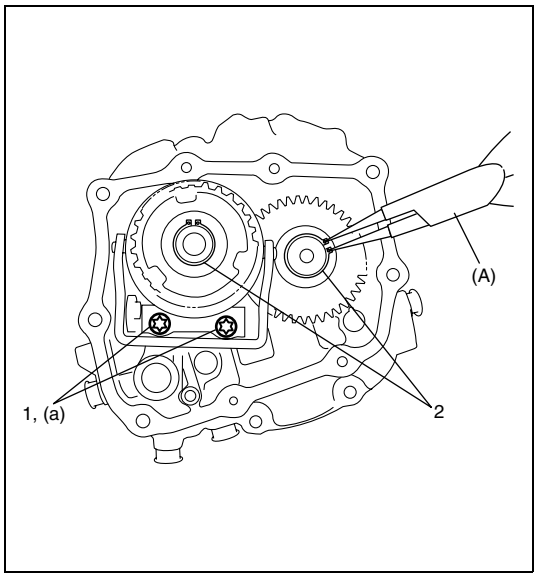

4) Install snap rings (2) and confirm that snap ring is installed in groove securely.

Special tool
(A): 09900-06107

5) Install 5th gear selector fork and then tighten new bolts (1) to specified torque.

Tightening torque
5th gear selector fork bolt (a): 22 N·m (2.2 kg-m, 16.0 lb-ft)

CAUTION:
Do not reuse 5th gear selector fork bolts (1). Be sure to use new adhesive pre-coated bolts. Otherwise, bolts may loosen.

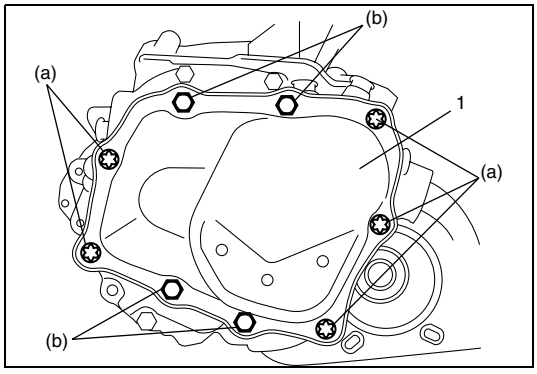

6) Install extension case cover (1) with new gasket and then tighten bolts to specified torque.

Tightening torque
Extension case cover bolt
(a): 29 N·m (2.9 kg-m, 21.0 lb-ft)
(b): 12 N·m (1.2 kg-m, 8.5 lb-ft)

Gear Selector, Cluster Gear and Main Shaft Removal and Installation

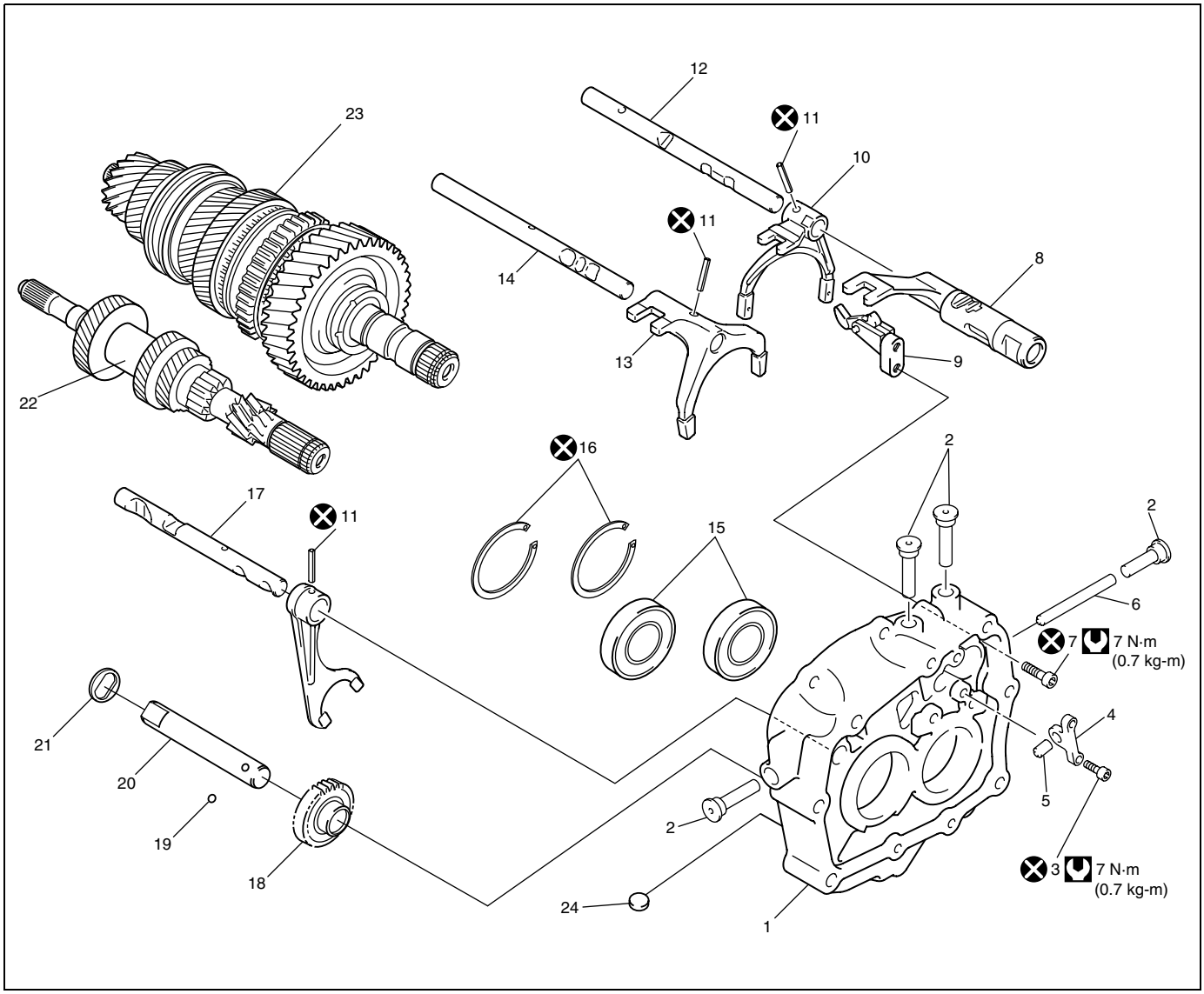

1. Extension bearing plate case	10. 3rd & 4th gear selector fork	19. Reverse gear shaft ball
2. Gear shift rod locking bush	11. Selector fork pin	20. Reverse gear shaft
3. Gear shift rod connector screw	12. 3rd & 4th gear selector rod	21. Reverse gear thrust washer
4. Gear shift rod connector	13. 1st & 2nd gear selector fork	22. Cluster gear
5. Gear shift rod detent pin No.1	14. 1st & 2nd gear selector rod	23. Main shaft assembly
6. Gear shift rod detent pin No.2	15. Ball bearing	24. Magnet
7. 5th gear pawl bolt	16. Extension case snap ring	Tightening torque
8. 5th gear shift rod fork	17. Reverse gear selector rod	Do not reuse.
9. 5th gear pawl	18. Reverse gear	

Removal

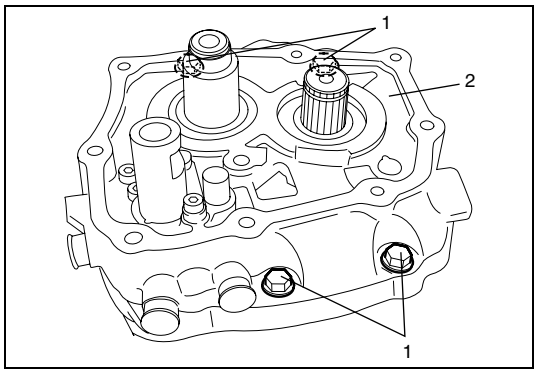

1) Remove bearing plate case bolt (1) and then detach transmission end plate (2) from transaxle case.

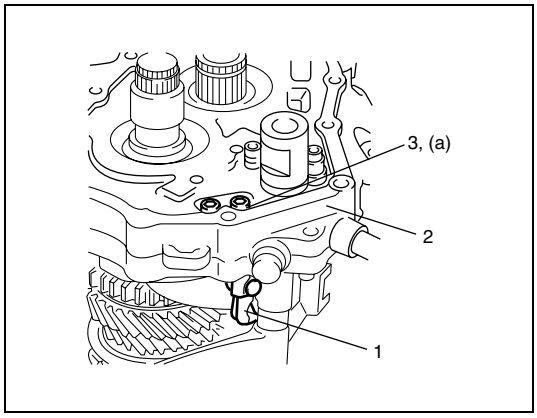

2) Remove 5th gear pawl (1) from extension bearing plate case (2).

NOTE:

If fastening bolts are stiff, heat extension bearing plate case with hot air dryer to approx. 80 °C (176 °F).

3. 5th gear pawl bolt

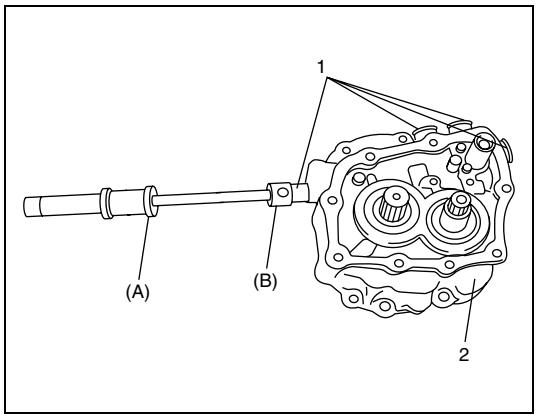

3) Remove gear shift rod locking bushes (1) from extension bearing plate case (2) using special tools.

Special tool
(A): 09922-48620
(B): 09922-48610

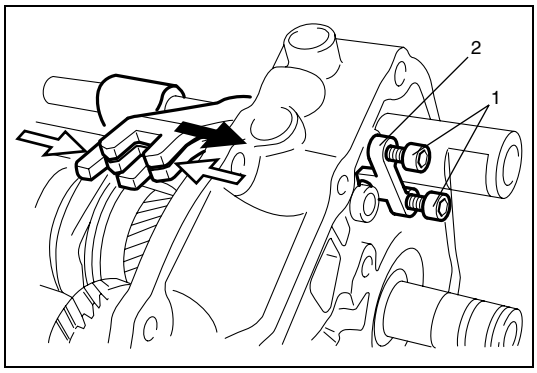

4) Remove gear shift rod connector bolt (1).
5) Engage 2nd, 3rd and 5th gear and then remove gear shift rod connector (2).

NOTE:

If fastening bolts are stiff, heat extension bearing plate case with hot air dryer to approx. 80 °C (176 °F).

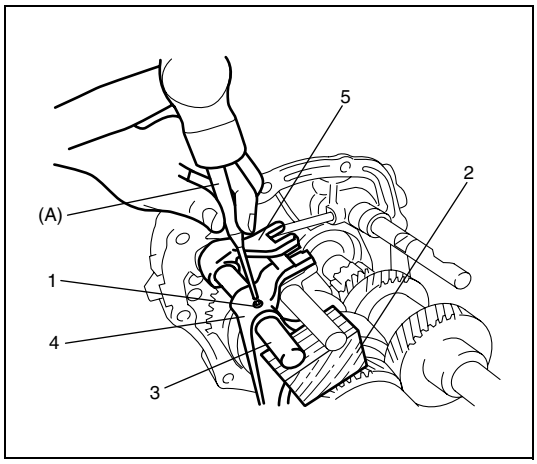

6) Remove 3rd & 4th selector fork pin (1) using special tool and then pull out 3rd & 4th gear selector rod (3), selector fork (4) and 5th gear shift rod fork (5).

Special tool
(A): 09922-89810

CAUTION:
When removing selector fork pin, apply a piece of wood (2) or the like to gear selector rod so as to protect it against damage.

7) Remove 5th gear shift fork.

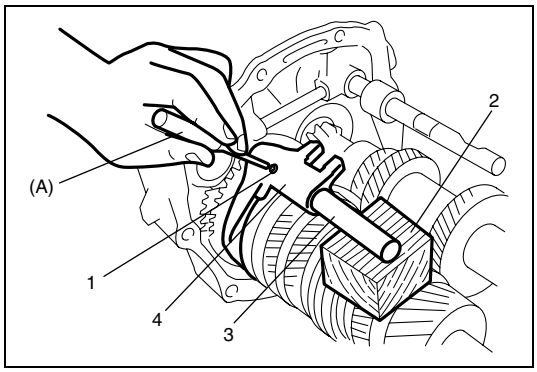

8) Remove 1st & 2nd selector fork pin (1), 1st & 2nd gear selector rod (3) and selector fork (4) in the same manner as step 6).

Special tool
(A): 09922-89810

2. A piece of wood

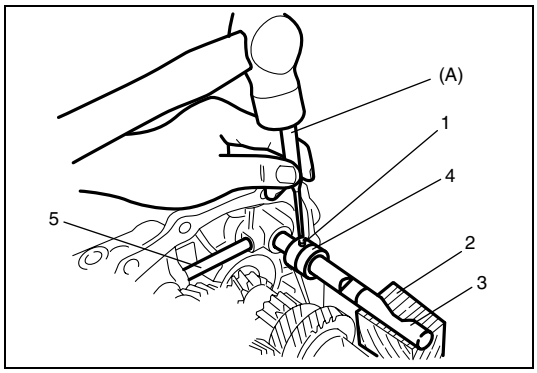

9) Remove reverse selector fork pin (1), reverse gear selector rod (3) and reverse gear selector fork (4) in the same manner as step 6).

Special tool
(A): 09922-89810

10) Remove gear shift rod detent pin No.2 (5).

2. A piece of wood

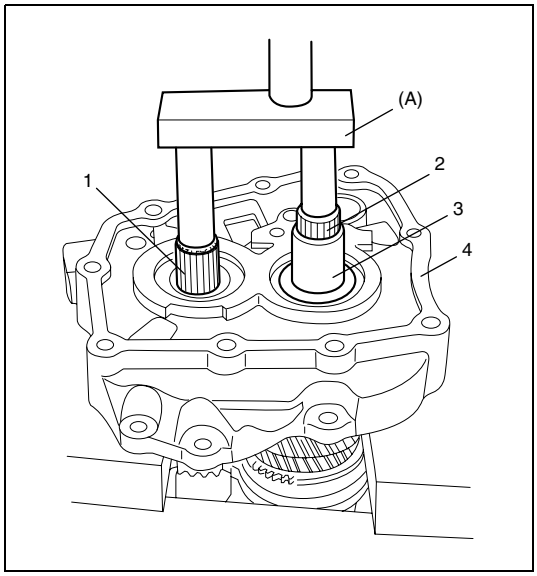

11) Drive out cluster gear (1) and main shaft (2) from extension bearing plate case (4) using special tool and then take off 5th gear inner bearing ring (3).

Special tool
(A): 09922-68610

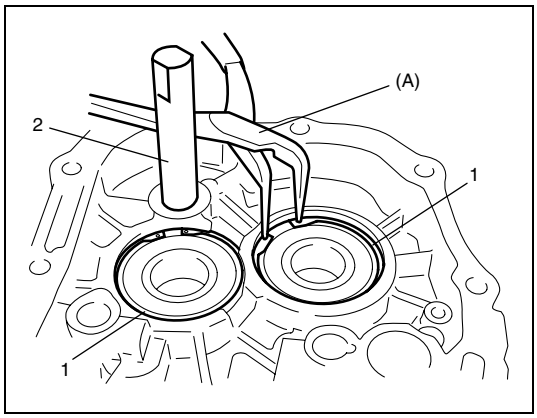

12) Remove circlips (1) using special tool.

Special tool
(A): 09900-06105

13) Clamp reverse gear shaft (2) with soft jawed vise and remove reverse gear shaft and ball by tapping plate case with plastic hammer.

NOTE:
Do not tap mating face of extension bearing plate case.

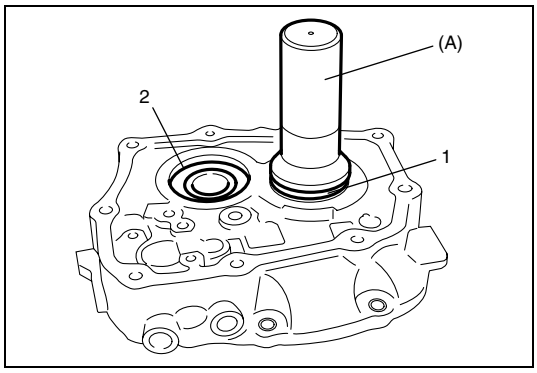

14) Remove cluster gear ball bearing (1) and main shaft ball bearing (2) from extension bearing plate case using special tool.

Special tool
(A): 09913-75810

Installation

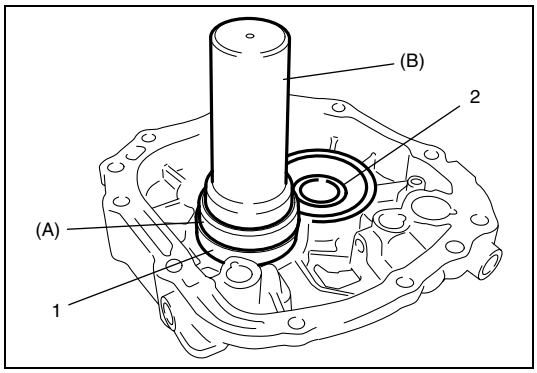

1) Install cluster gear ball bearing (1) and main shaft ball bearing (2) to extension bearing plate case using special tools.

Special tool
(A): 09924-07720
(B): 09913-75810

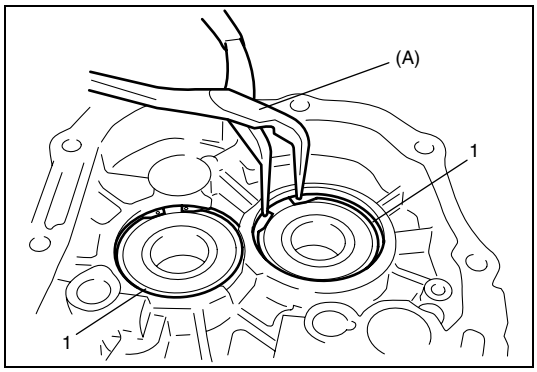

2) Install new circlips (1) using special tool.

Special tool
(A): 09900-06105

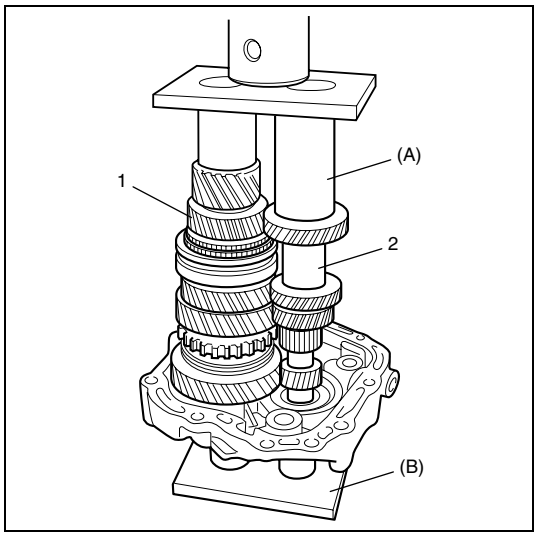

3) Install main shaft (1) and cluster gear (2) using special tools and hydraulic press.

Special tool
(A): 09922-58620
(B): 09922-58610

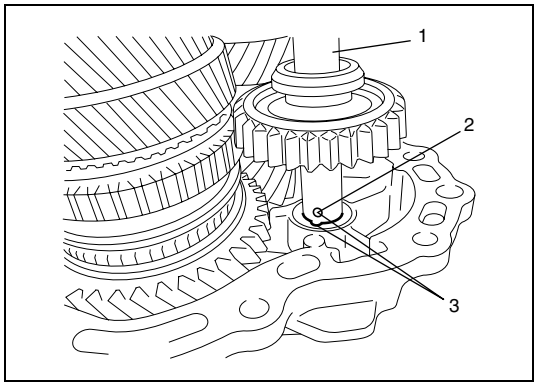

4) Install reverse gear shaft (1) and ball (2) on a matched position (3) according to figure by using hydraulic press.

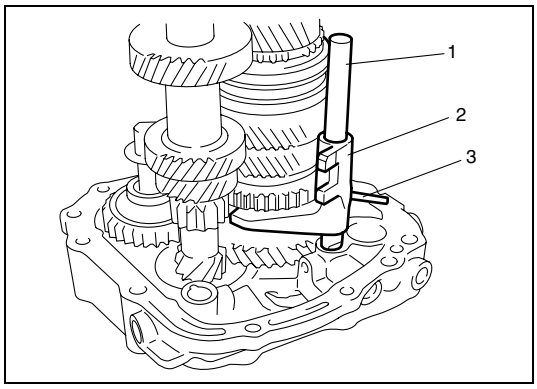

5) Install 1st & 2nd gear selector rod (1) and selector fork (2) to extension bearing plate case and then drive in new selector fork pin (3).

CAUTION:
When installing selector fork pin, apply a piece of wood or the like to gear selector rod so as to protect it against damage.

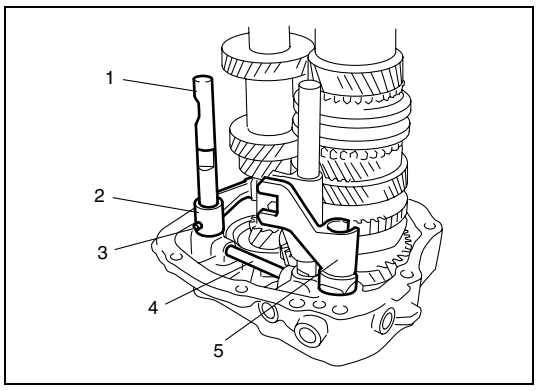

6) Install gear shift rod detent pin No.2 (4).
7) Install reverse gear selector rod (1) and selector fork (2) in the same manner as step 5).
8) Install 5th gear shift rod fork (5).

3. Selector fork pin

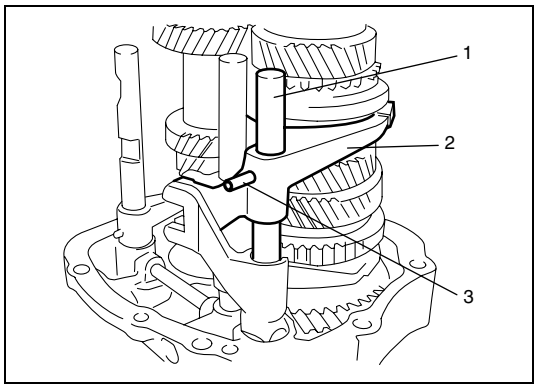

9) Install 3rd & 4th gear selector rod (1) and selector fork (2) in the same manner as step 5).

3. Selector fork pin

10) Install gear shift rod locking bushes using plastic hammer.

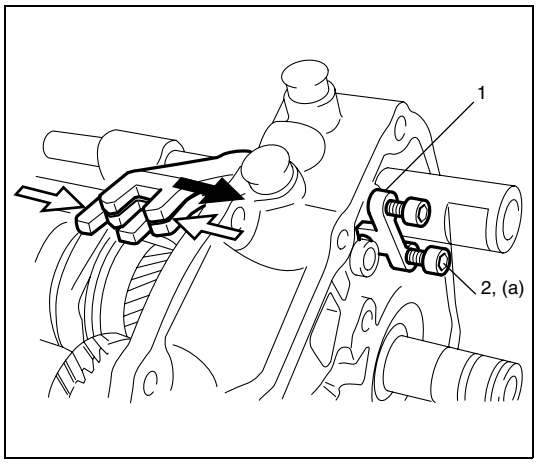

11) Engage 2nd, 3rd and 5th gear and install gear shift rod connector (1) with specified torque.

2. Gear shift rod connector bolt

Tightening torque
Gear shift rod connector bolt (a): 7 N·m (0.7 kg-m, 5.0 lb-ft)

CAUTION:
Do not reuse gear shift rod connector bolt (2). Be sure to use new adhesive pre-coated bolts. Otherwise, bolts may loosen.

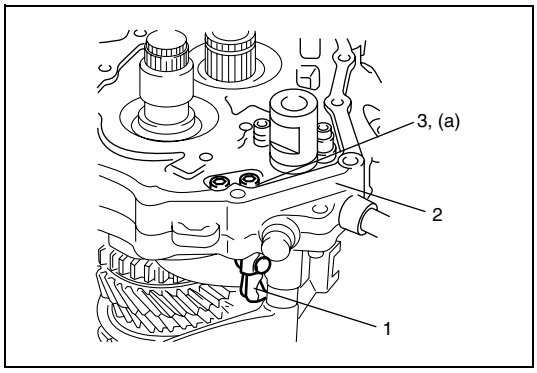

12) Install 5th gear pawl (1) to extension bearing plate case (2) and tighten bolts to specified torque.

Tightening torque
5th gear pawl bolt (a): 7 N·m (0.7 kg-m, 5.0 lb-ft)

CAUTION:
Do not reuse 5th gear pawl bolt (3). Be sure to use new adhesive pre-coat bolts. Otherwise, bolts may loosen.

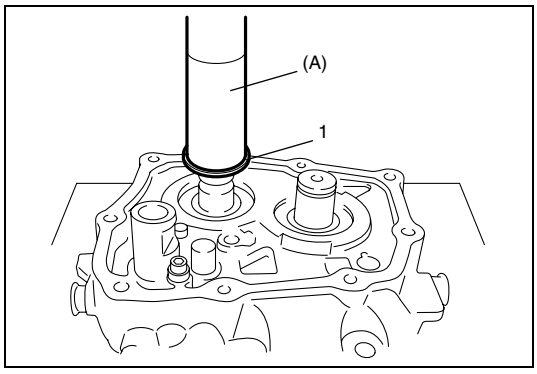

13) Install 5th gear inner bearing ring to main shaft (1) using special tool.

Special tool
(A): 09913-84510

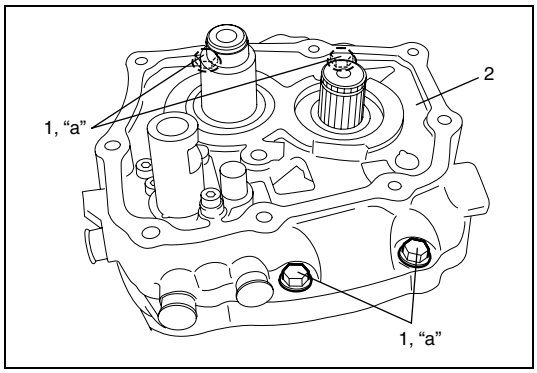

14) Install transmission end plate (2), and tighten bearing plate case bolt (1) with specified torque.

Tightening torque
Bearing plate case bolt (a): 22 N·m (2.2 kg-m, 16.0 lb-ft)

Cluster Gear & Main Shaft Components

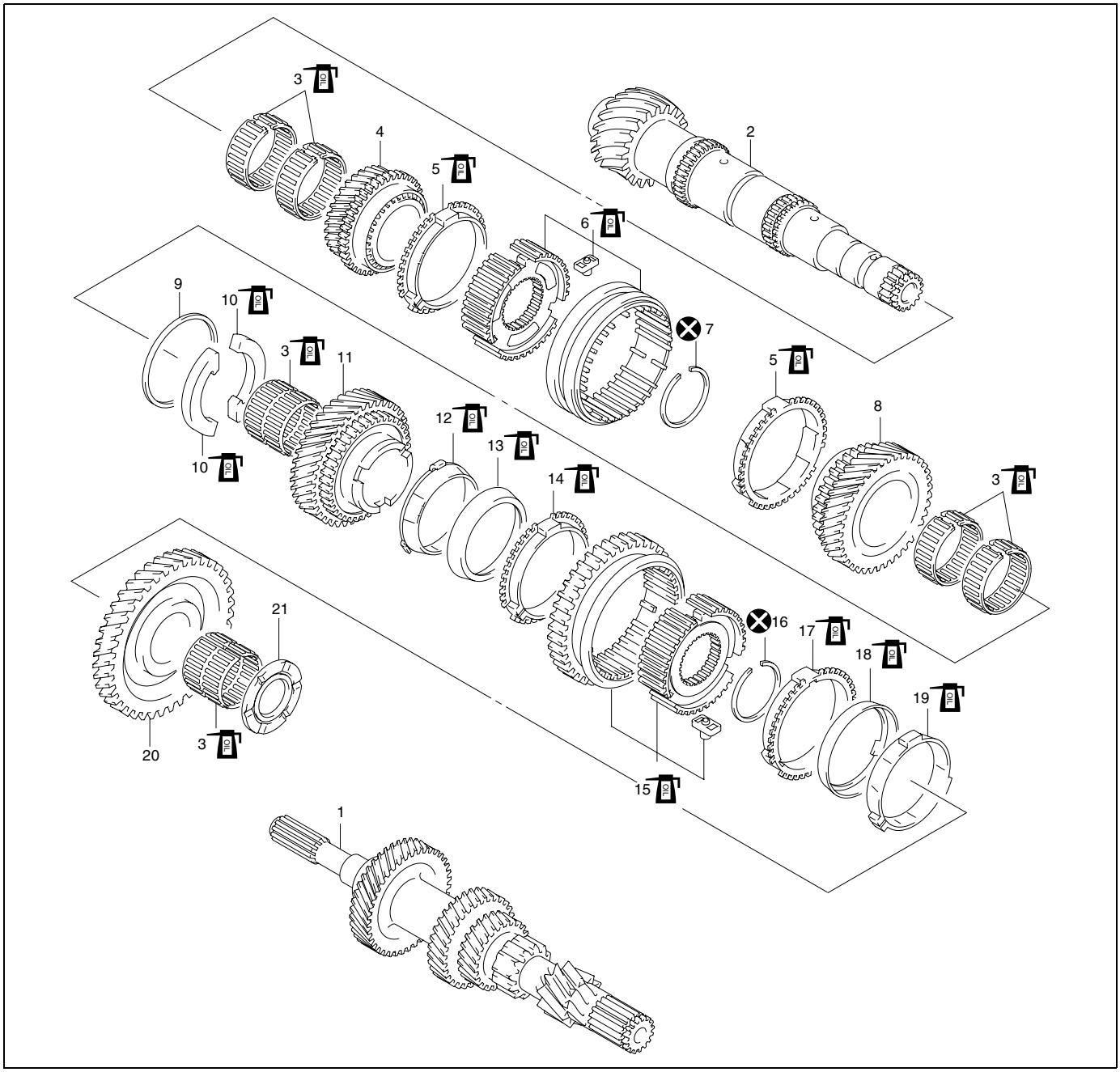

1. Transaxle cluster gear	9. 4th gear wear plate	17. 1st gear synchronizer outer ring
2. Transaxle main shaft	10. 2nd gear thrust washer	18. 1st gear synchronizer intermediate ring
3. Needle bearing	11. 2nd gear	19. 1st gear synchronizer inner ring
4. 4th gear	12. 2nd gear synchronizer inner ring	20. 1st gear
5. 3rd & 4th synchronizer ring	13. 2nd gear synchronizer intermediate ring	21. 1st gear wear plate
6. 3rd & 4th gear hub assembly	14. 2nd gear synchronizer outer ring	Apply transaxle oil
7. Snap ring	15. 1st & 2nd gear hub assembly	Do not reuse.
8. 3rd gear	16. 2nd gear snap ring	

Main Shaft Disassembly and Assembly

Disassembly

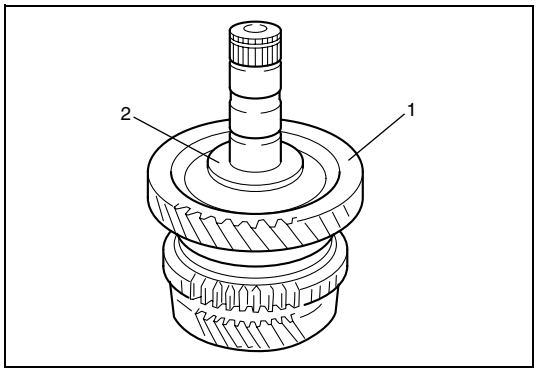

1) Remove 1st gear wear plate (2) and then take out 1st speed gear (1), 1st gear needle bearing and 1st gear synchronizer ring assembly.

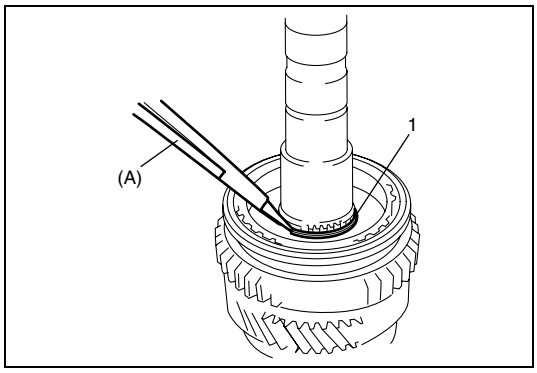

2) Using special tool, remove 2nd gear snap ring (1).

Special tool
(A): 09900-06107

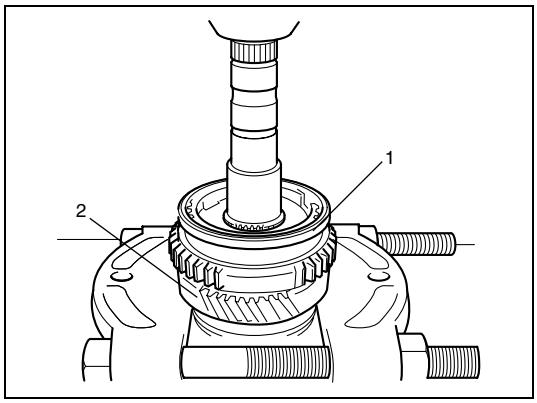

3) Apply puller to 2nd gear and drive out 1st & 2nd gear hub assembly (1) with 2nd gear (2) using hydraulic press.

CAUTION:
Make sure to use flat side of puller to avoid causing damage to 2nd gear tooth.

4) Remove 2nd gear needle bearing.

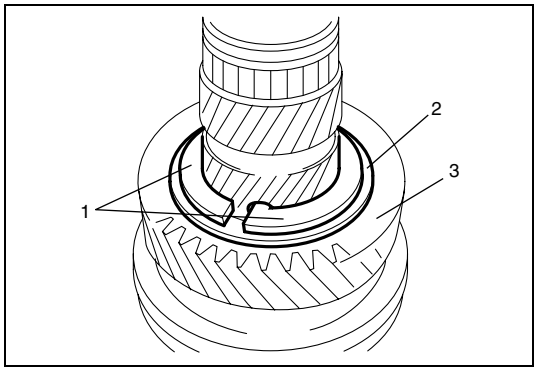

5) Remove 2nd gear thrust washer (1) and 4th gear wear plate (2).
6) Take out 3rd gear (3), 3rd gear needle bearing and 3rd & 4th synchronizer ring.

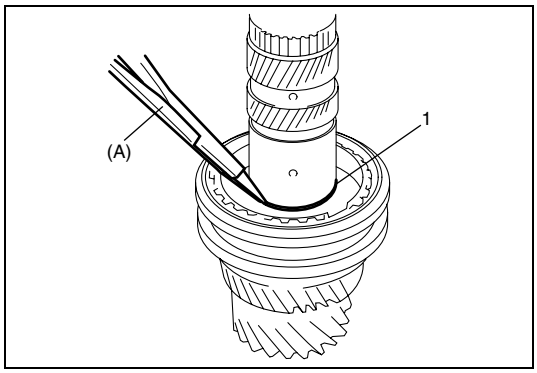

7) Remove snap ring (1) using special tool.

Special tool
(A): 09900-06107

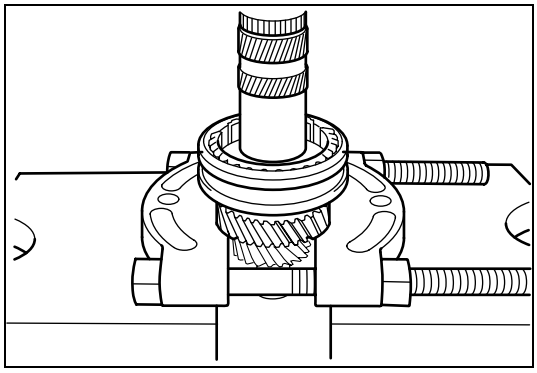

8) Apply puller to 4th gear (2) and drive out 3rd & 4th gear hub assembly (1) with 4th gear using hydraulic press.

CAUTION:
Make sure to use flat side of puller to avoid causing damage to 4th gear tooth.

9) Remove 4th gear needle bearing.

Assembly

1) Clean all components thoroughly, inspect them for any abnormality and replace with new ones as necessary.

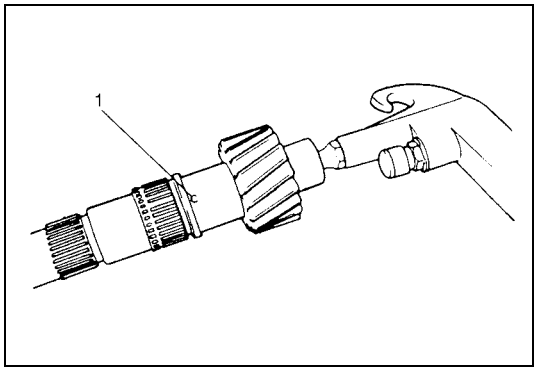

2) To ensure lubrication, air blow oil holes (1) and make sure that they are free from any obstruction.

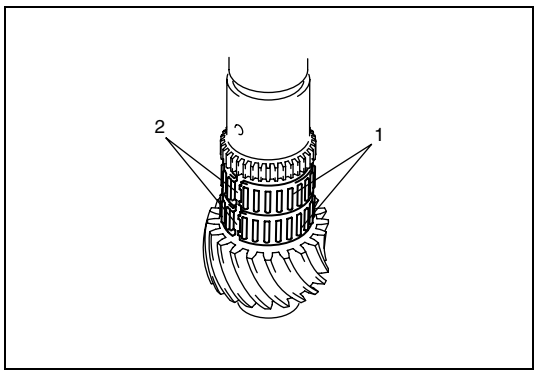

3) Install two pieces of needle bearings (1) for 4th gear onto main shaft.

NOTE:
Align each slot (2) of needle bearings.

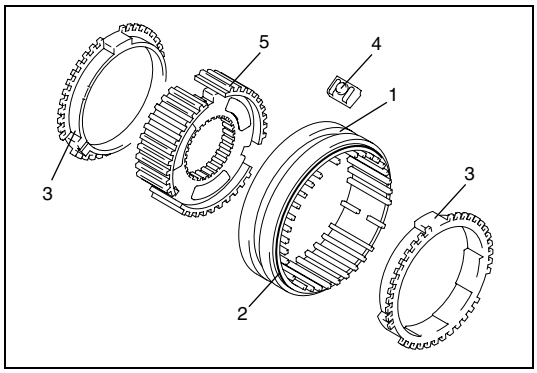

4) Assemble 3rd & 4th gear hub assembly (hub (5), sleeve (1) and keys (4)) as shown in figure.

2.	Groove of chamfer
3.	Synchronizer ring

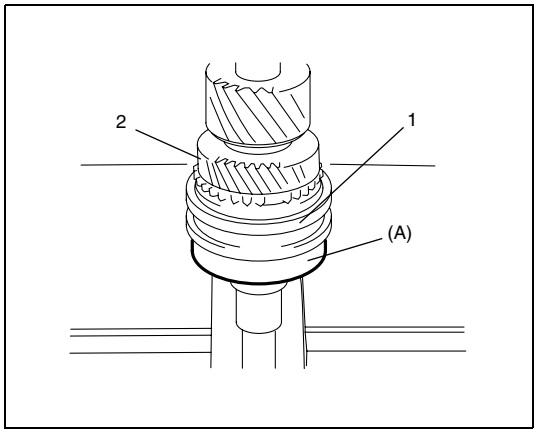

5) Install 4th gear (2) and synchronizer ring onto main shaft. Press-fit 3rd & 4th gear hub assembly (1) onto main shaft facing groove of chamfer of sleeve to 3rd gear side, using special tool and hydraulic press.

Special tool
(A): 09924-07710

NOTE:

Check free rotation of 4th gear (2) after press-fitting 3rd & 4th gear hub assembly (1).

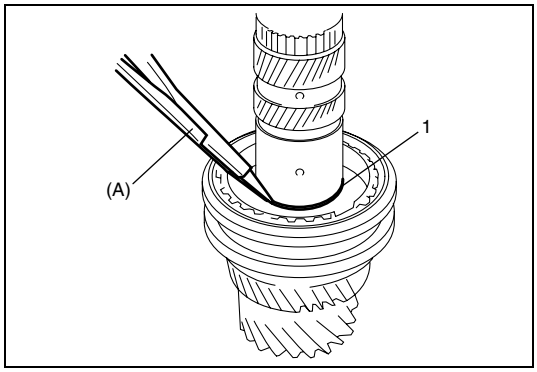

6) Install new snap ring (1) using special tool.

Special tool
(A): 09900-06107

7) Install 3rd gear needle bearing in the same manner as step 5).
8) Drive in 3rd gear.

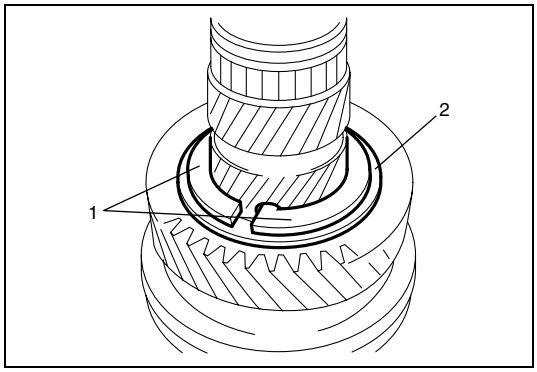

9) Install 2nd gear thrust washer (1) and 4th gear wear plate (2).

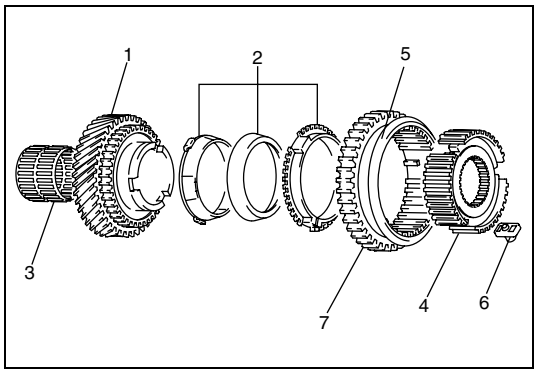

10) Assemble 2nd gear (1), 2nd gear synchronizer ring assembly (2), 2nd gear needle bearing (3) and 1st & 2nd gear hub assembly (hub (4), sleeve (5) and keys (6)).

NOTE:

Facing gear side of sleeve (7) to 2nd gear side.

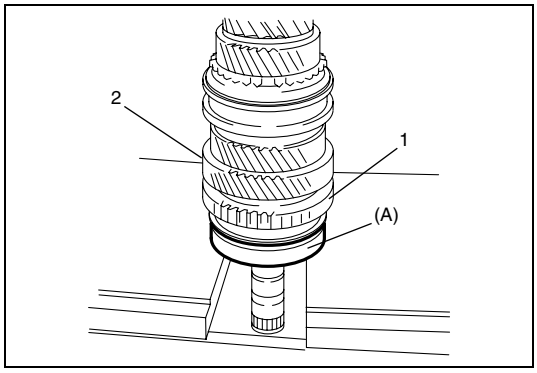

11) Press-fit the assembled parts in step 12) onto main shaft using special tool and hydraulic press.

Special tool
(A): 09924-07710

NOTE:

Check free rotation of 2nd gear (2) after press-fitting 1st & 2nd gear hub assembly (1).

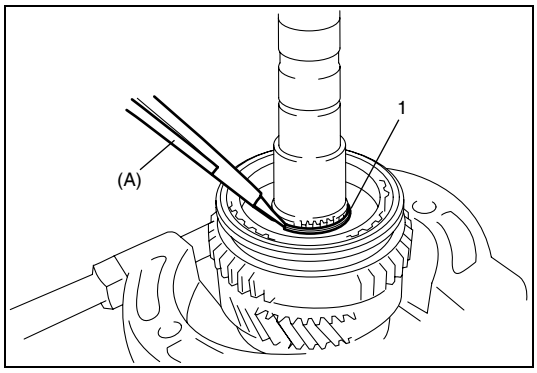

12) Install new 2nd gear snap ring (1) using special tool.

Special tool
(A): 09900-06107

13) Install 1st gear synchronizer ring assembly onto main shaft.
14) Install 1st gear needle bearing onto main shaft.

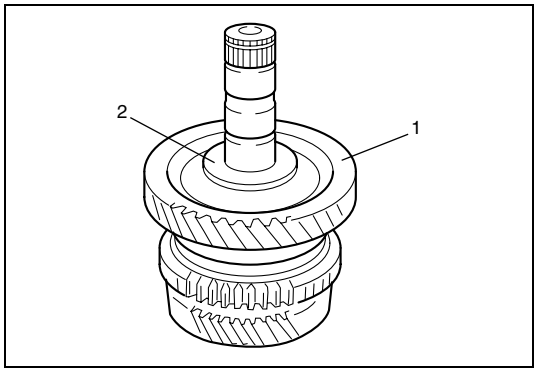

15) Drive in 1st gear (1) and then install 1st gear wear plate (2).

Cluster Gear & Main Shaft Inspection

- Check free rotation of all speed gears.
- Inspect cluster gear & main shaft assembly for wear, distortion or damage.
  If any defect is found, replace defective part with new one.

Transaxle Case Disassembly and Assembly

Disassembly

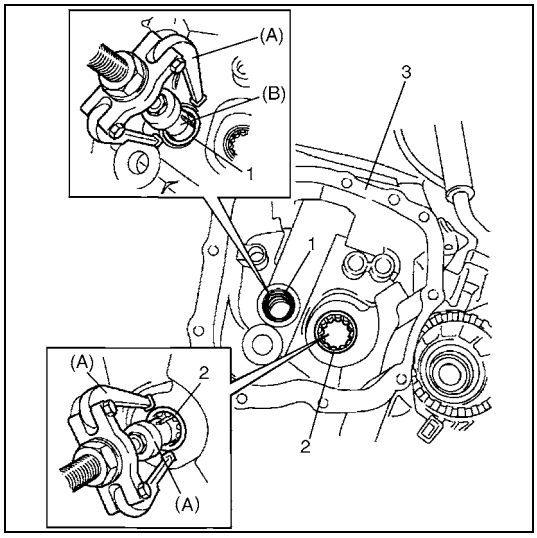

1) Remove pinion needle bearing (1) from transaxle case (3) using special tools.

Special tool
(A): 09925-08610
(B): 09926-58610

2) Remove main shaft roller bearing (2) from transaxle case (3) using special tools.

Special tool
(A): 09925-08610

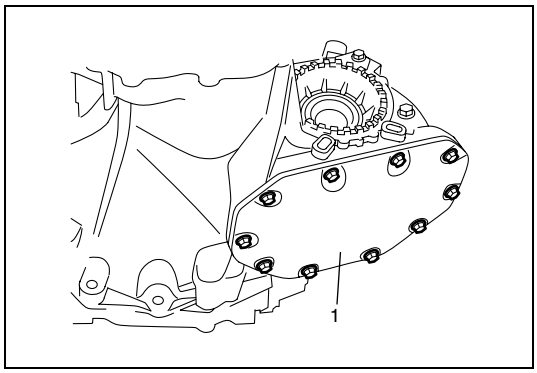

3) Remove differential cover (1) with gasket.
4) Remove left and right side differential side oil seals referring to “Differential Side Oil Seal Replacement” in this section.

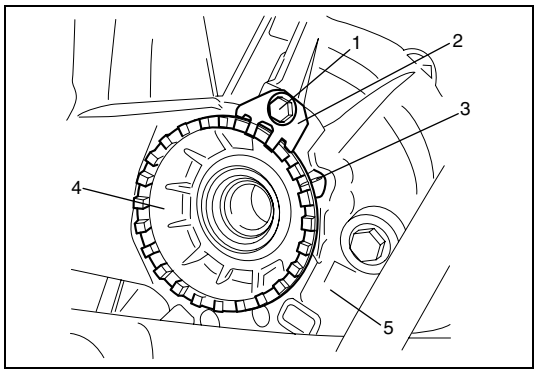

5) Remove lock plate bolt (1) and then retaining ring lock plate (2).

NOTE:

Mark position (3) of differential bearing retaining ring (4) to transaxle case (5).

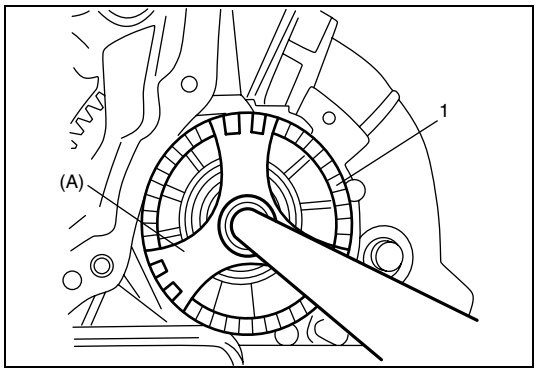

6) Loosen differential bearing retaining ring (1) using special tool.

Special tool
(A): 09925-18610

7) Remove differential assembly from lower side of transaxle case.
8) Remove differential bearing retaining ring, from transaxle case and remove O-ring from bearing retaining ring.

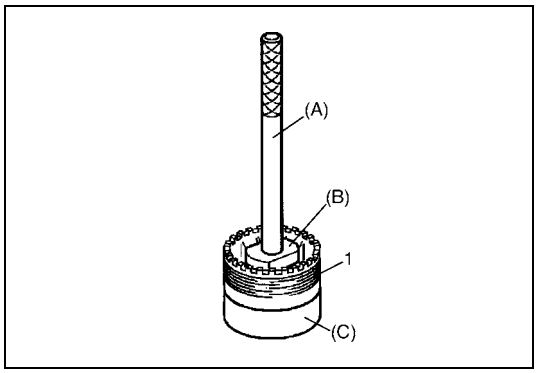

9) Remove differential side bearing outer race from differential bearing retaining ring (1) using special tools.

Special tool
(A): 09925-68620
(B): 09925-68610
(C): 09919-08610

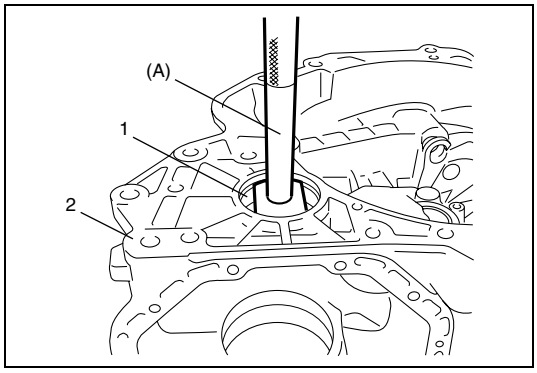

10) Remove right side outer race (1) from transaxle case (2) using special tool.

Special tool
(A): 09925-68620

Assembly

NOTE:
Before installation, wash each part and apply specified transaxle oil to sliding faces of bearing.

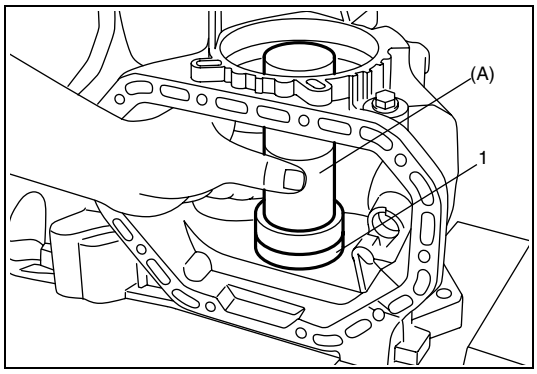

1) Install right side outer race (1) to transaxle case using special tool and hammer.

Special tool
(A): 09913-85210

2) Apply transaxle oil to new O-ring and then install O-ring to groove of differential bearing retaining ring.

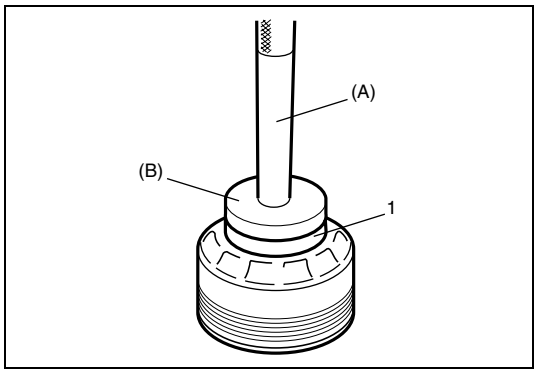

3) Install left side differential side bearing outer race (1) to bearing ring using special tools.

Special tool
(A): 09925-68620
(B): 09925-68610

4) Install differential assembly and then install differential bearing retaining ring with specified procedure according to “Differential Adjustment” in this section.

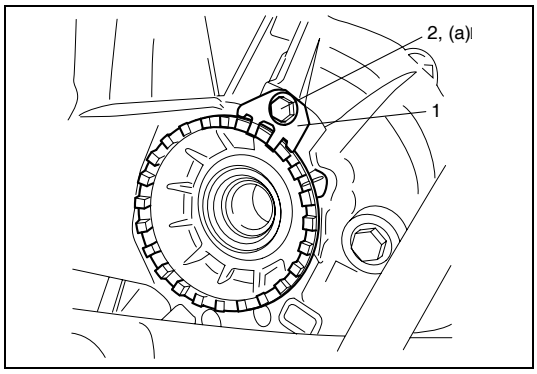

5) Install retaining ring lock plate (1) and then tighten lock plate bolt (2) with specified torque.

Tightening torque
Lock plate bolt (a): 9 N·m (0.9 kg-m, 6.5 lb-ft)

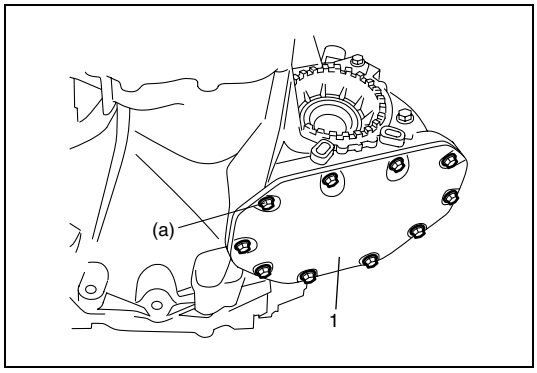

6) Install differential cover (1) and new gasket to transaxle case.

Tightening torque
Differential cover bolt (a): 18 N·m (1.8 kg-m, 13.0 lb-ft)

7) Install left side oil seal referring to “Differential Side Oil Seal Replacement” in this section.
8) Install differential side oil seal referring to “Differential Side Oil Seal Replacement” in this section.

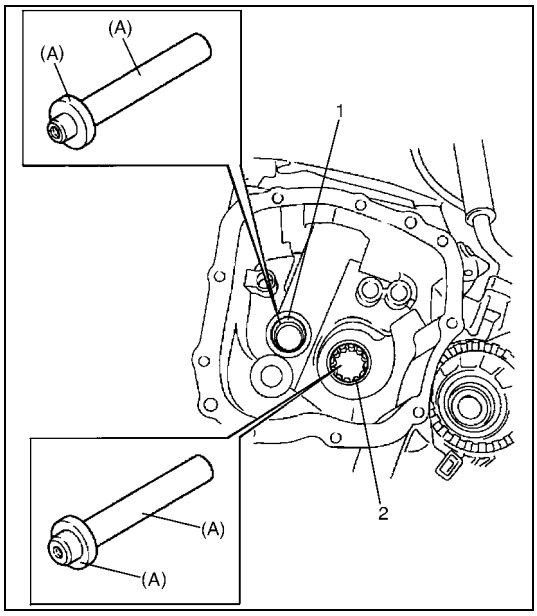

9) Install pinion needle bearing (1) to transaxle case using special tools.

Special tool
(A): 09925-18620

10) Install main shaft roller bearing (2) to transaxle case using special tools.

Special tool
(A): 09925-18620

Differential Components

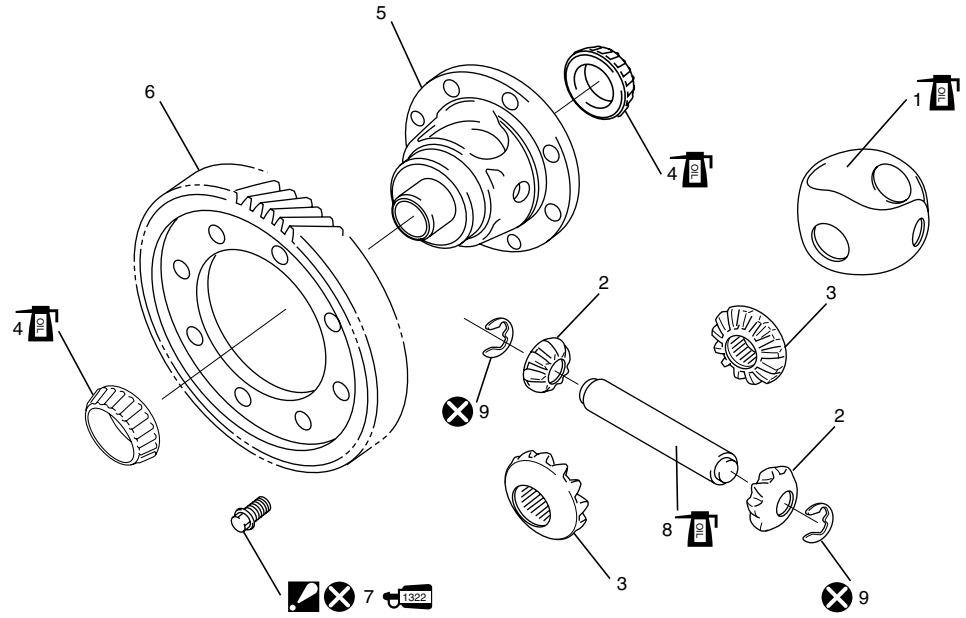

1. Plastic cage	7.	Final gear bolt : Tighten to 70 N·m (7.0 kg-m), 30° and 15° by the specified procedure. : Apply thread lock 99000-32110 to all around thread part of bolt.
2. Differential side pinion gear	8.	Differential pinion shaft
3. Differential side gear	9.	Differential pinion shaft washer
4. Differential side bearing		Do not reuse.
5. Differential case		Apply transaxle oil.
6. Final gear		

Differential Disassembly and Assembly

Disassembly

1) Remove oil seal referring to “Differential Side Oil Seal Replacement” in this section, if necessary.
2) Remove differential assembly referring to “Transaxle Case Disassembly and Assembly” in this section.

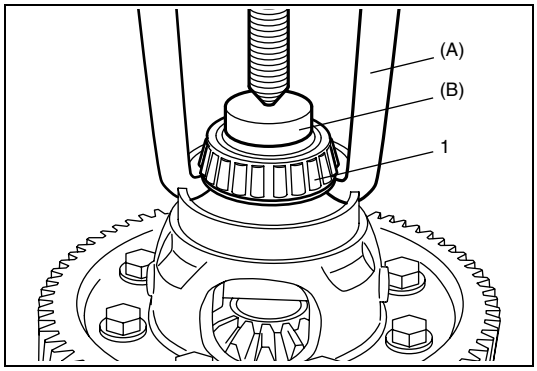

3) Remove right side differential side bearing (1) using special tools.

Special tool
(A): 09913-65135
(B): 09925-88210

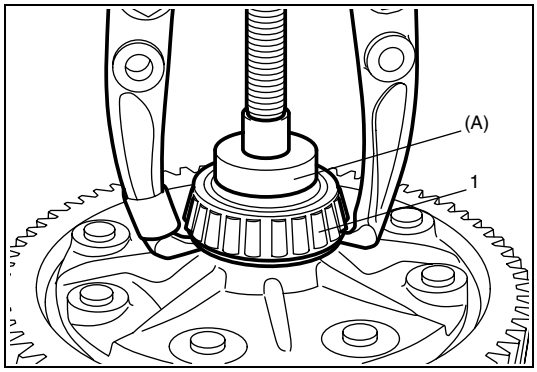

4) Remove left side differential side bearing (1) using special tool and puller.

Special tool
(A): 09925-88210

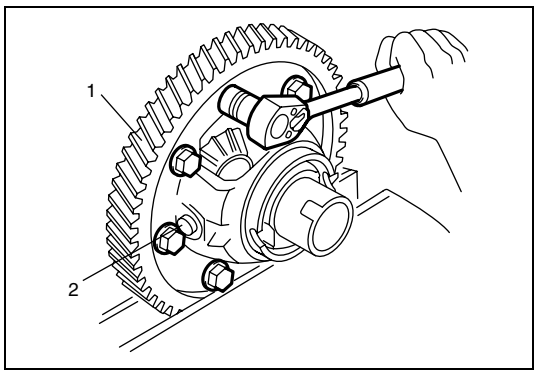

5) Hold differential gear assembly (1) with soft jawed vise. Remove final gear bolts and then take out final gear.
6) Remove pinion shaft washer from pinion shaft (2). Drive out pinion shaft and then disassemble components parts.

Assembly

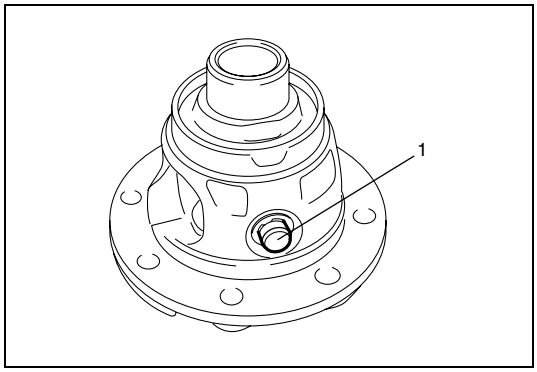

1) Assemble component parts.
2) Drive in pinion shaft (1) and then install new pinion shaft washer to pinion shaft.

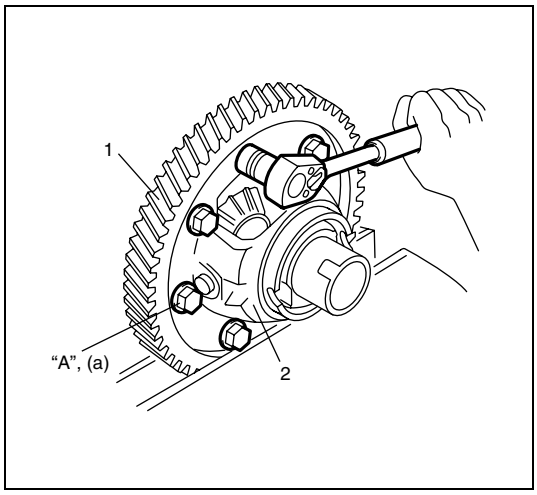

3) Hold final gear (1) with soft jawed vise, install differential case (2) and then tighten new bolts with thread lock cement applied to specified torque.

"A": Thread lock cement 99000-32110

Tightening torque
Final gear bolt (a): 70 N·m (7.0 kg-m, 51.0 lb-ft), 30° and 15° by the specified procedure.

CAUTION:
Main shaft and final gear must be replaced as a set when either replacement becomes necessary.

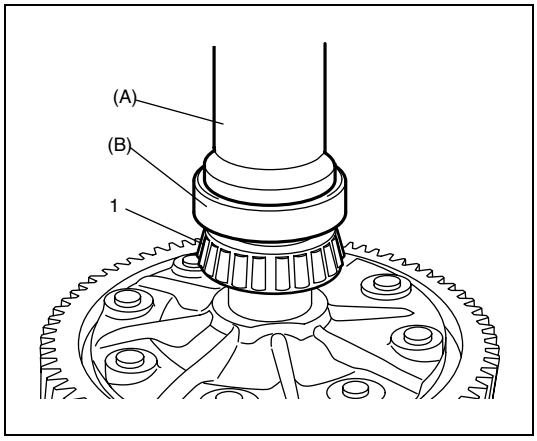

4) Press-fit differential side bearings (right and left) (1) using special tools and hydraulic press.

Special tool
(A): 09913-70123
(B): 09924-07730

CAUTION:
Do not mix differential side bearing outer races of left and right sides.

5) Install differential assembly and differential bearing retaining ring referring to "Transaxle Case Disassembly and Assembly" in this section.
6) Install oil seal referring to "Differential Side Oil Seal Replacement" in this section.

Differential Adjustment

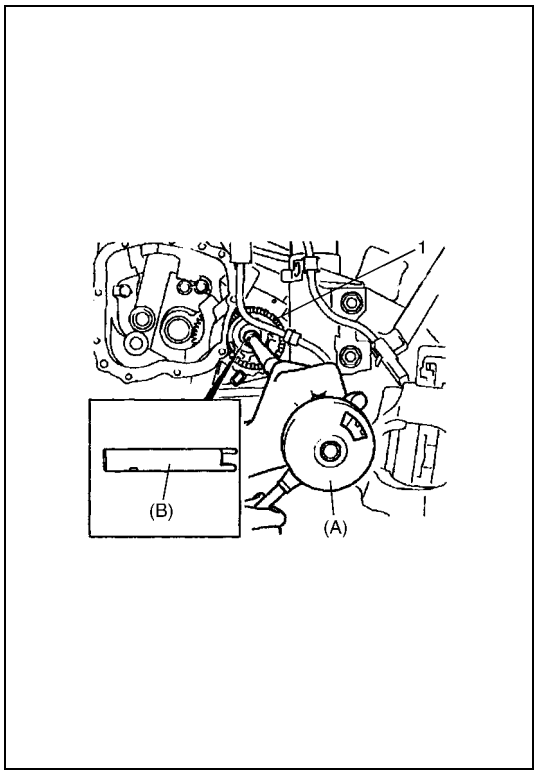

Adjust differential rotating torque to specified value below by tightening or loosening differential bearing retaining ring (1), using special tools.

Special tool
(A): 09922-78610
(B): 09922-78620

Maintain specified rotating torque at test speed of 1 revolution per second.

Repair case	Rotating torque (N·cm)
Reuse all removed parts.	(Set bearing ring to mark)
Reusing bearing, replacement of differential retaining ring, differential assembly or transaxle case.	60 – 100 (6 – 10 kg-cm, 5.25 – 8.65 lb-in)
Bearing as new part.	150 – 210 (15 – 21 kg-cm, 13.05 – 18.25 lb-in)

Tightening Torque Specification

Fastening part	Tightening torque		
	N•m	kg-m	lb-ft
Differential cover bolt	18	1.8	13.0
Transaxle oil level plug	4 N·m (0.4 kg-m, 3.0 lb-ft) and 45° to 135° by the specified procedure.		
Breather plug	4 N·m (0.4 kg-m, 3.0 lb-ft) and 180° by the specified procedure.		
Gear shift control lever bolt	5	0.5	3.5
Reverse lamp switch	20	2.0	15.0
Selector lever cover bolt	15	1.5	11.0
5th gear selector fork bolt	22	2.2	16.0
Extension case cover bolt (torx)	29	2.9	21.0
Extension case cover bolt	12	1.2	8.5
Engine rear mounting bolt	55	5.5	40.0
Engine rear mounting bracket bolt	55	5.5	40.0
Transaxle to engine bracket No.1 bolt	40	4.0	30.0
Transaxle to engine bracket No.2 bolt	30	3.0	22.0
Transaxle case bolt	60	6.0	45.0
Engine left mounting bolt	55	5.5	40.0
Gear shift rod connector bolt	7	0.7	5.0
5th gear pawl bolt	7	0.7	5.0
Bearing plate case bolt	22	2.2	16.0
Lock plate bolt	9	0.9	6.5
Differential cover bolt	18	1.8	13.0
Final gear bolt	70 N·m (7.0 kg-m, 51.0 lb-ft), 30° and 15° by the specified procedure.		
Cable grommet bolt	9	0.9	6.5
Control bracket bolt	12	1.2	8.5

Required Service Material

Material	Recommended SUZUKI product or specification	Use
Lithium grease	SUZUKI SUPER GREASE A (99000-25010)	• Oil seal lips
Thread lock cement	THREAD LOCK 1322 (99000-32110)	• Select lever cover bolts • Final gear bolts

Special Tool

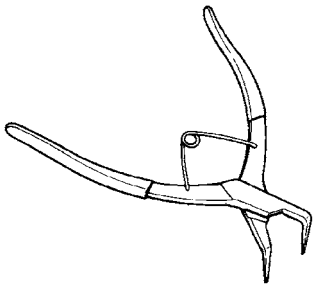 09900-06105 Snap ring pliers (closing type)	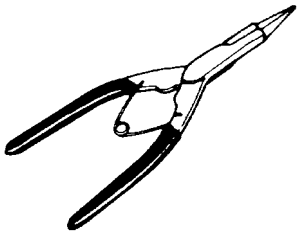 09900-06107 Snap ring pliers (Opening type)	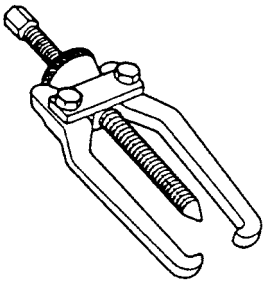 09913-65135 Bearing puller	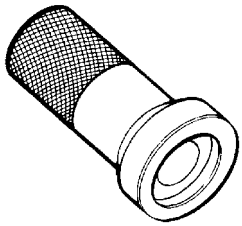 09913-70123 Bearing installer
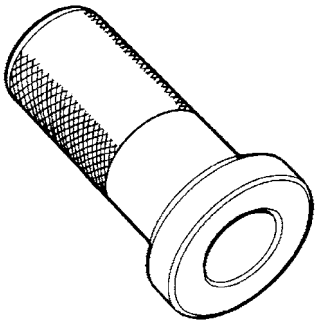 09913-75810 Bearing installer	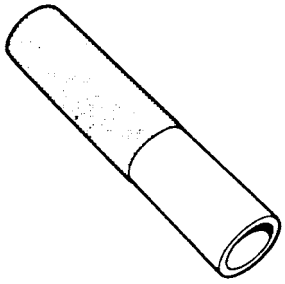 09913-84510 Bearing installer	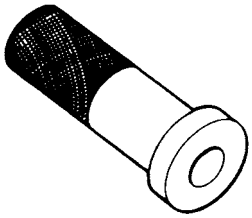 09913-85210-000 Bearing pulling holder	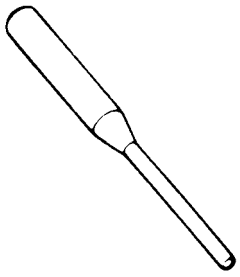 09922-89810 Spring pin remover
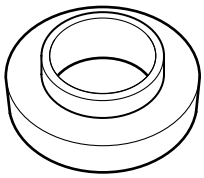 09924-07710 Synchronizer hub installer	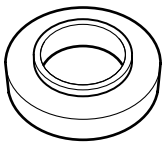 09924-07720 Synchronizer hub installer	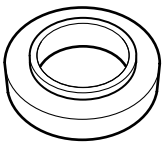 09924-07730-000 Bearing installer	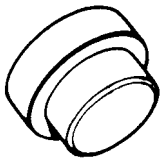 09925-88210 Bearing puller attachment
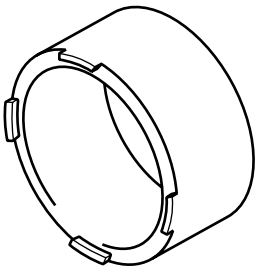 09919-08610 (KM-303) Support base	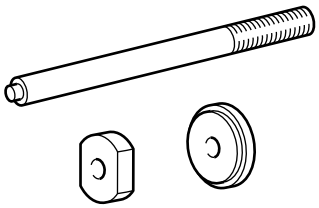 09925-68620 (KM-305) Bearing remover / installer	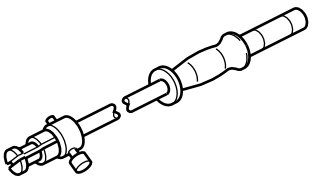 09922-48620 (KM-328-B) Locking bush remover	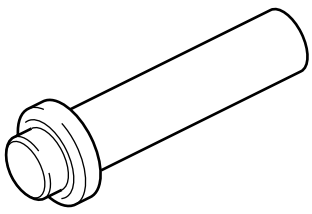 09926-28610 (KM-446) Oil seal installer

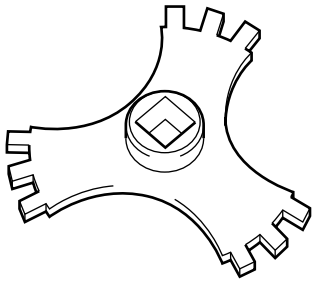 09925-18610 (KM-447) Differential bearing retaining ring remover / installer	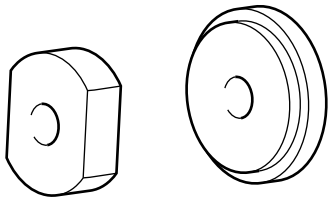 09925-68610 (KM-451) Outer race remover / installer	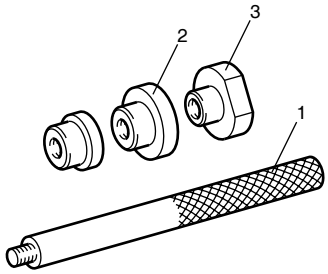 09925-18620 (KM-454) Oil seal remover / installer (See NOTE "A")	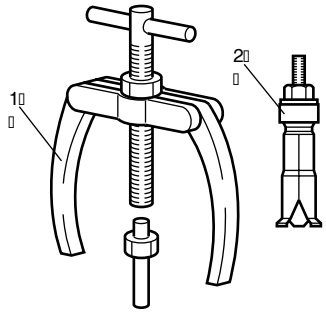 09925-08610 (KM-556-A) Bearing puller set (See NOTE "B")
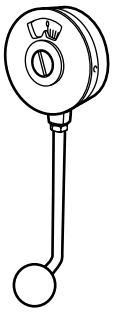 09922-78610 (MKM-536-A) Friction coefficient meter	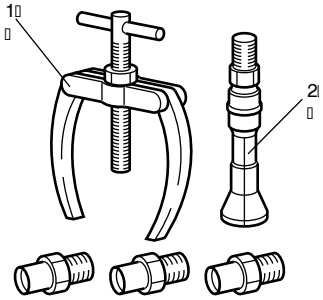 09913-58610 (MKM-557-A) Oil seal puller set (See NOTE "C")	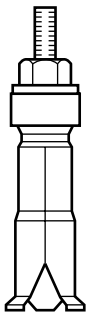 09926-58610 (MKM-599) Bearing remover	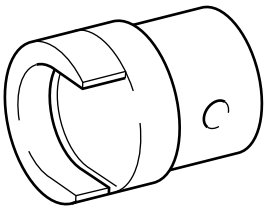 09922-48610 (KM-727) Locking bush remover
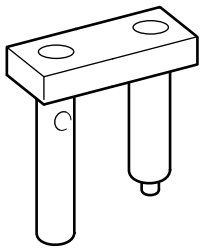 09922-68610 (KM-6335) Transaxle shaft thrust piece	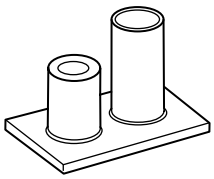 09922-58620 (KM-6337) Transaxle shaft installer	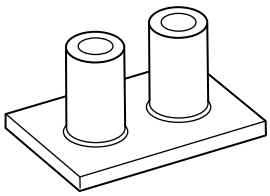 09922-58610 (KM-6338) Transaxle shaft installer	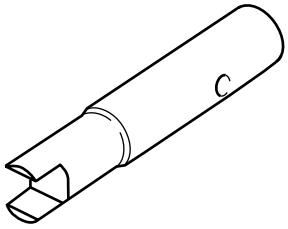 09922-78620 (KM-6037) Adapter

NOTE:

- **"A": Oil seal remover / installer 09925-18620 (KM-454) includes 1. KM-454-4, 2. KM-454-2 and 3. KM-454-3.**
- **"B": Bearing puller set 09925-08610 (KM-556-A) includes 1. KM-556-A and 2. KM-556-2.**
- **"C": Oil seal puller set 09913-58610 (MKM-557-A) includes 1. MKM-557-1 and 2. MKM-557-2A.**

SECTION 7C3

CLUTCH (Z13DT ENGINE MODEL)

WARNING:

For vehicles equipped with a Supplemental Restraint (Air Bag) System:

- **Service on and around the air bag system components or wiring must be performed only by an authorized SUZUKI dealer. Refer to "Air Bag System Components and Wiring Location View" under "General Description" in air bag system section in order to confirm whether you are performing service on or near the air bag system components or wiring. Please observe all WARNINGS and "Service Precautions" under "On-Vehicle Service" in air bag system section before performing service on or around the air bag system components or wiring. Failure to follow WARNINGS could result in unintentional activation of the system or could render the system inoperative. Either of these two conditions may result in severe injury.**
- **Technical service work must be started at least 90 seconds after the ignition switch is turned to the "LOCK" position and the negative cable is disconnected from the battery. Otherwise, the system may be activated by reserve energy in the Sensing and Diagnostic Module (SDM).**

CONTENTS

General Description 7C3-2
Diagnosis 7C3-2
Diagnosis Table 7C3-2
On-Vehicle Service 7C3-3
Clutch Cable Components 7C3-3
Clutch Cable Removal and Installation 7C3-4
Clutch Cable Inspection 7C3-6
Clutch Cable Adjustment 7C3-6
Clutch Pedal and Clutch Pedal Bracket Components 7C3-7
Unit Repair Overhaul 7C3-9
Clutch Cover and Clutch Disc Components 7C3-9
Clutch Cover and Clutch Disc Removal and Installation 7C3-10
Clutch Cover and Clutch Disc Inspection 7C3-11
Clutch cover 7C3-11
Clutch Release Mechanism Removal and Installation 7C3-11
Clutch Release Mechanism Inspection 7C3-12
Clutch release shaft 7C3-12
Tightening Torque Specification 7C3-13
Required Service Material 7C3-13
Special Tool 7C3-13

General Description

The clutch is a diaphragm-spring clutch of a dry single disc type. The diaphragm spring is of a tapering-finger type, which is a solid ring in the outer diameter part, with a series of tapered fingers pointing inward.

The disc, carrying torsional spring, is positioned on the transaxle cluster gear with an involute spline fit.

The clutch cover is secured to the flywheel, and carries the diaphragm spring in such a way that the peripheral edge part of the spring pushes on the pressure plate against the flywheel (with the disc in between), when the clutch release bearing is held back. This is the engaged condition of the clutch.
Depressing the clutch pedal causes the release bearing to advance and pushes on the tips of the tapered fingers of the diaphragm spring. When this happens, the diaphragm spring pulls the pressure plate away from the flywheel, thereby interrupting the flow of drive from flywheel through clutch disc to transaxle cluster gear.

Diagnosis

Diagnosis Table

Condition	Possible Cause	Correction
Slipping	Maladjusted clutch cable	Adjust clutch cable.
	Worn or oily clutch disc facing	Replace disc.
	Warped disc, pressure plate or flywheel surface	Replace disc, clutch cover or flywheel.
	Weakened diaphragm spring	Replace clutch cover.
	Rusted clutch cable	Replace cable.
Dragging clutch	Maladjusted clutch cable	Adjust clutch cable.
	Weakened diaphragm spring, or worn spring tip	Replace clutch cover.
	Rusted cluster gear splines	Lubricate.
	Damaged or worn splines of cluster gear	Replace cluster gear.
	Excessively wobbly clutch disc	Replace disc.
	Clutch facings broken or dirty with oil	Replace disc.
Clutch vibration	Glazed (glass-like) clutch facings	Repair or replace disc.
	Clutch facings dirty with oil	Replace disc.
	Release bearing slides unsmoothly on cluster gear	Lubricate or replace cluster gear.
	Wobbly clutch disc, or poor facing contact	Replace disc.
	Weakened damper in flywheel	Replace flywheel.
	Clutch disc rivets loose	Replace disc.
	Distorted pressure plate or flywheel surface	Replace clutch cover or flywheel.
	Weakened engine mounting or loosened engine mounting bolt or nut	Retighten or replace mounting.
Noisy clutch	Worn or broken release bearing	Replace release bearing.
	Excessive rattle of clutch disc hub	Replace disc.
	Cracked clutch disc	Replace disc.
	Pressure plate and diaphragm spring rattling	Replace clutch cover.
Grabbing clutch	Clutch disc facings soaked with oil	Replace disc.
	Clutch disc facings excessively worn	Replace disc.
	Rivet heads showing out of facing	Replace disc.
	Weakened damper in flywheel	Replace flywheel.

On-Vehicle Service

Clutch Cable Components

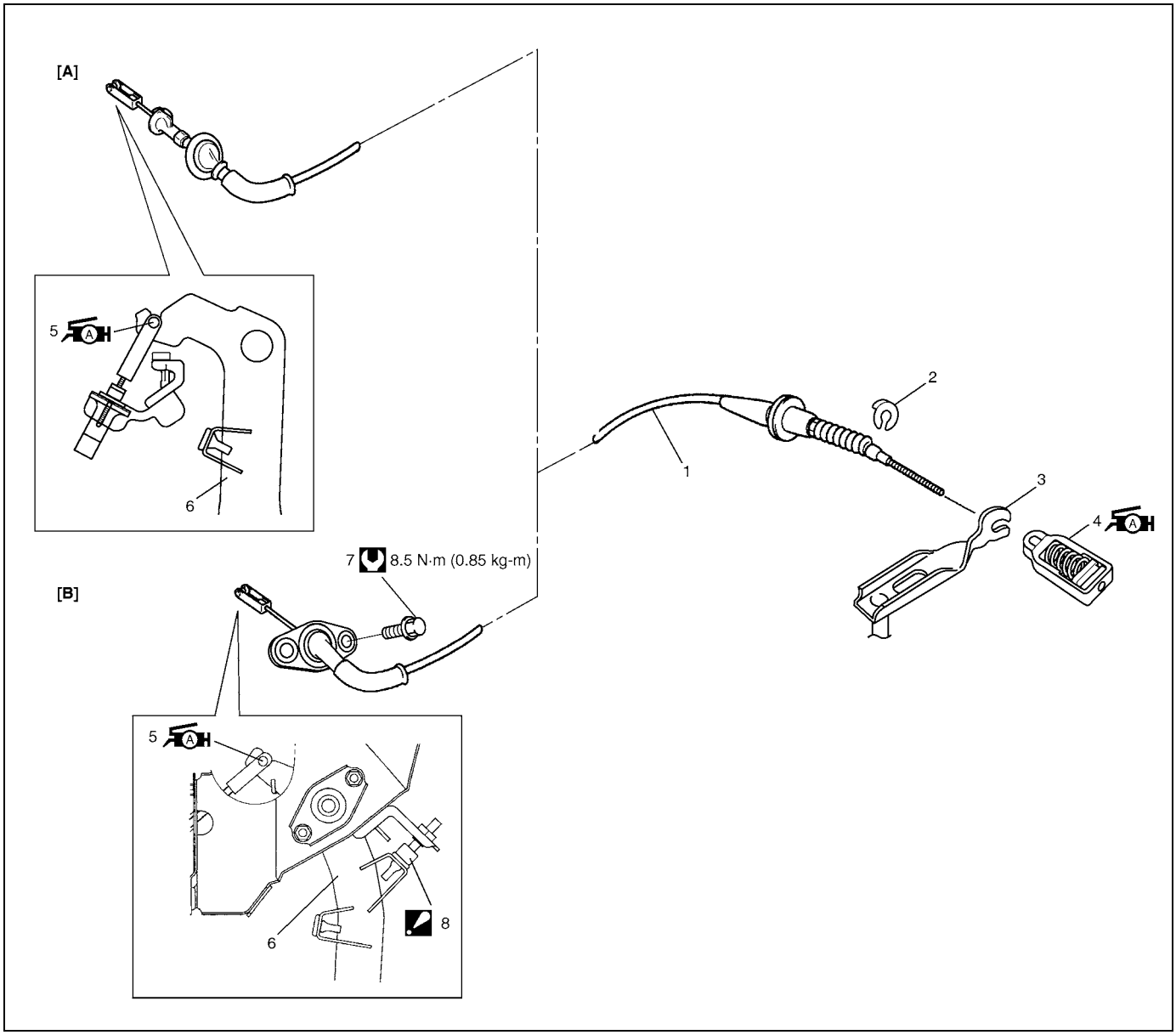

[A]: For RM413D	4. Clutch cable nut : Apply grease 99000-25010 to clutch cable nut.
[B]: For RB413D	5. Clutch cable hook : Apply grease 99000-25010 to cable hook.
1. Clutch cable	6. Clutch pedal
2. Joint washer	7. Clutch cable outer bolt
3. Clutch release shaft	8. Clutch pedal stop bolt : Never loosen clutch pedal stop bolt.

Clutch Cable Removal and Installation

Removal

1) Disconnect negative cable at battery.

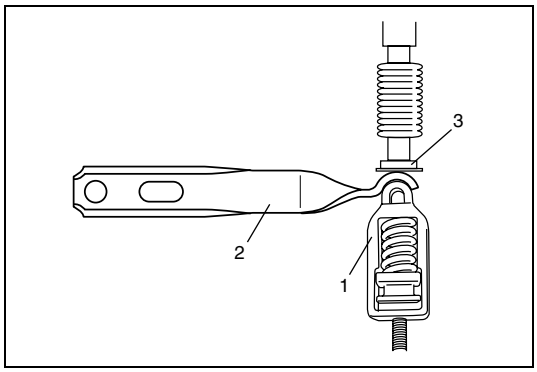

2) Remove joint washer (3) from clutch cable.
3) Loosen clutch cable nut (1) and remove clutch cable from clutch release shaft (2).
4) Detach clutch cable from clutch cable bracket.

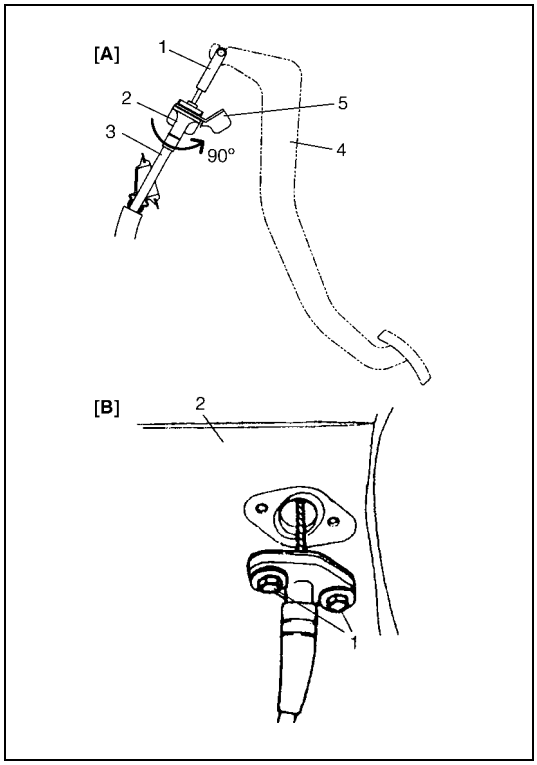

5) Remove clutch cable as follows.

For RM413D [A]

a) Disconnect cable hook (1) from clutch pedal (4).
b) Remove clutch cable (3) from clutch pedal bracket (5) by turning cable cap (2) about 90° as shown.

For RB413D [B]

a) Remove clutch cable outer bolt (1) at dash panel (2) in engine room.
b) Disconnect cable hook from clutch pedal, then take off cable.

Installation

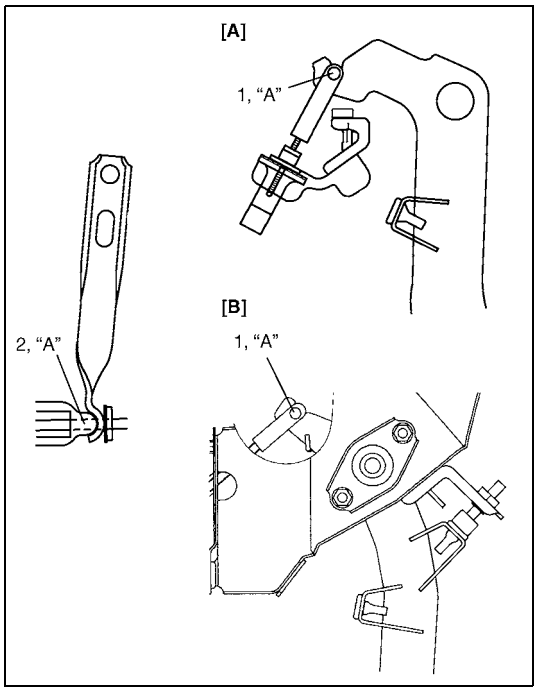

1) Apply grease to contact surfaces of clutch cable nut (2) and cable hook (1) before installing cable.

"A": Grease 99000-25010

2) Hook cable end with pedal using screwdriver or long nose pliers from cabin inside.

[A]: For RM413D
[B]: For RB413D

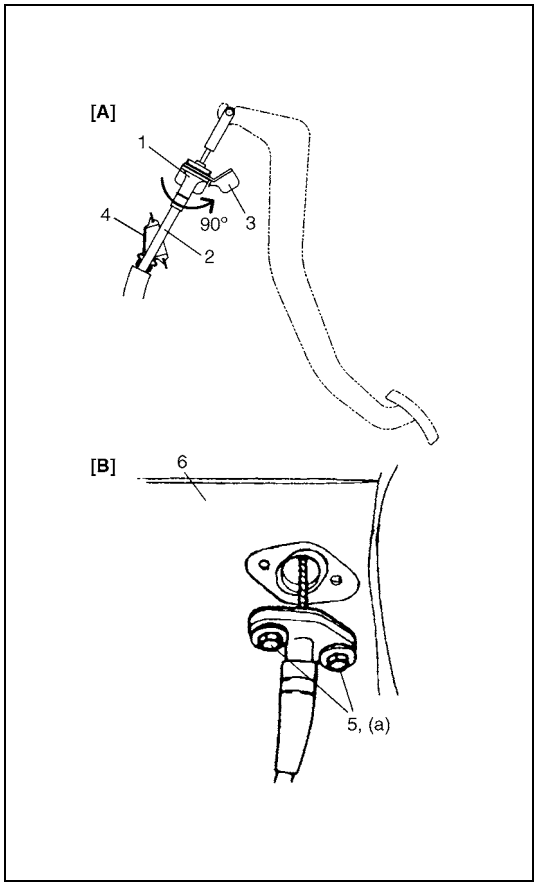

3) Install clutch cable as follows.

For RM413D [A]

a) Install clutch cable (2) to clutch pedal bracket (3) by turning cable cap (1) about 90° as shown.

For RB413D [B]

a) Fasten cable with 2 bolts (5) to dash panel (6).

Tightening torque
Clutch cable outer bolt
(a): 8.5 N·m (0.85 kg-m, 6.0 lb-ft)

4) Install clutch cable to clutch cable bracket.
5) Join clutch cable to clutch cable nut, then install clutch cable nut to release shaft.
6) Screw in clutch cable nut and adjust clutch cable referring to "Clutch Cable Adjustment" in this section.

NOTE:

Take care that cable grommet (4) has specific installing direction as shown in the figure.

7) Connect negative cable at battery.
8) Check clutch for proper function with engine running.

Clutch Cable Inspection

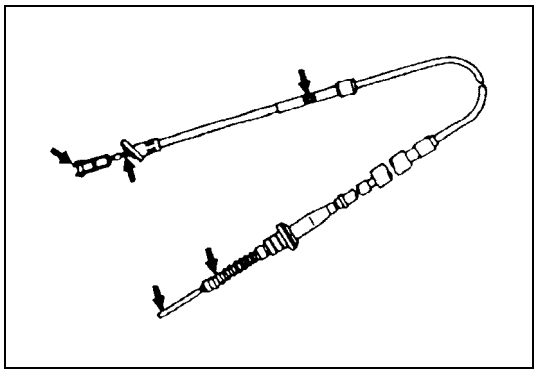

Inspect clutch cable and replace it for any of the following conditions.

- Excessive cable friction
- Frayed cable
- Bent or kinked cable
- Broken boots
- Worn end

Clutch Cable Adjustment

1) Remove joint washer from clutch cable.

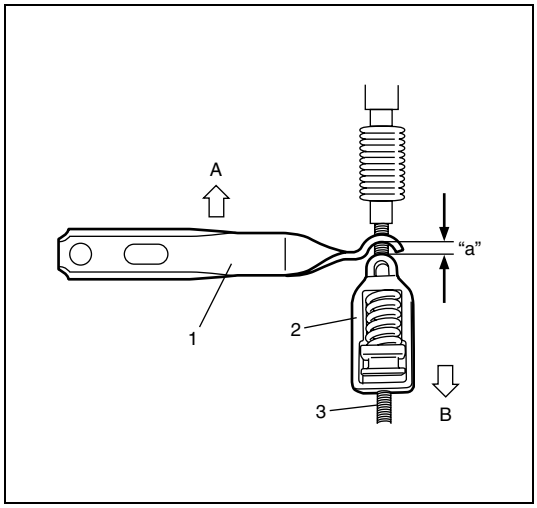

2) Check clearance "a" under the condition a) and b), and adjust it to specified clearance turning cable nut (2) if it is out of the specification.
   a) push release shaft (1) in the direction "A" until release shaft play disappears.
   b) Pull at clutch cable (3) in the direction "B".

Clearance (for used cable)
"a": 4 – 6 mm (0.16 – 0.24 in.)

NOTE:

When replacing clutch cable with a new one, adjust clearance to 2 – 4 mm (0.08 – 0.16 in.).

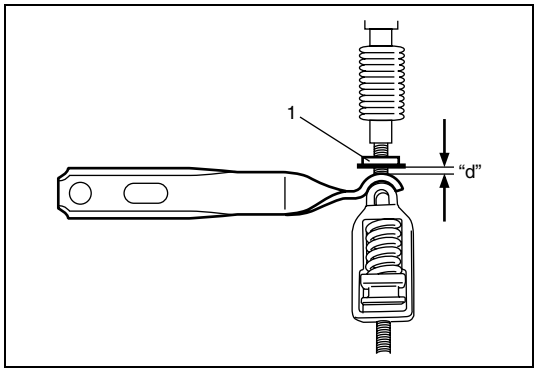

3) Install joint washer (1) to the specified position.

Joint washer installation position
"d": 0 – 2 mm (0 – 0.08 in.)

Clutch Pedal and Clutch Pedal Bracket Components

For RM413D

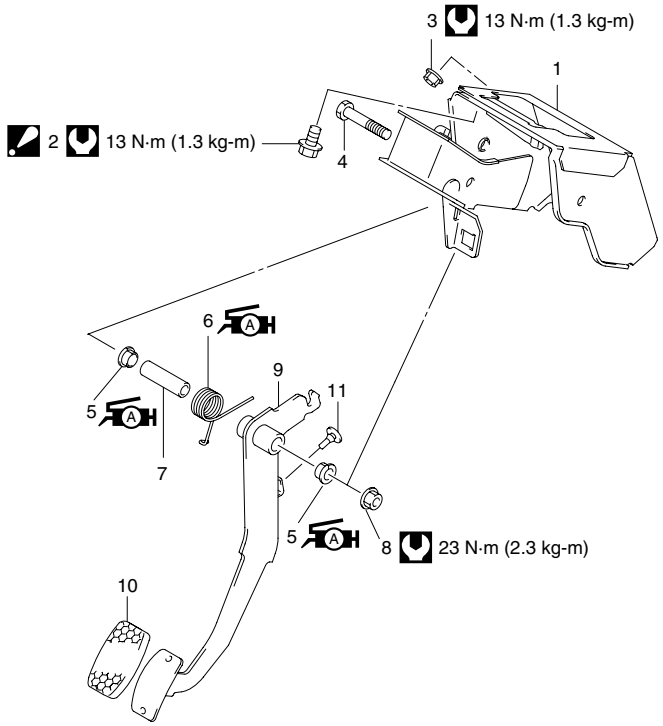

	1. Clutch pedal bracket	7. Pedal spacer
	2. Pedal bracket bolt : Pedal bracket bolt must be tighten after pedal bracket nut.	8. Pedal shaft nut
	3. Pedal bracket nut	9. Clutch pedal
	4. Pedal shaft bolt	10. Pedal pad
	5. Pedal bush : Apply grease 99000-25010 to inside and outside surface of spacer.	11. Pedal cushion
	6. Pedal spring : Apply grease 99000-25010 to inside surface of spring.	Tightening torque

For RB413D

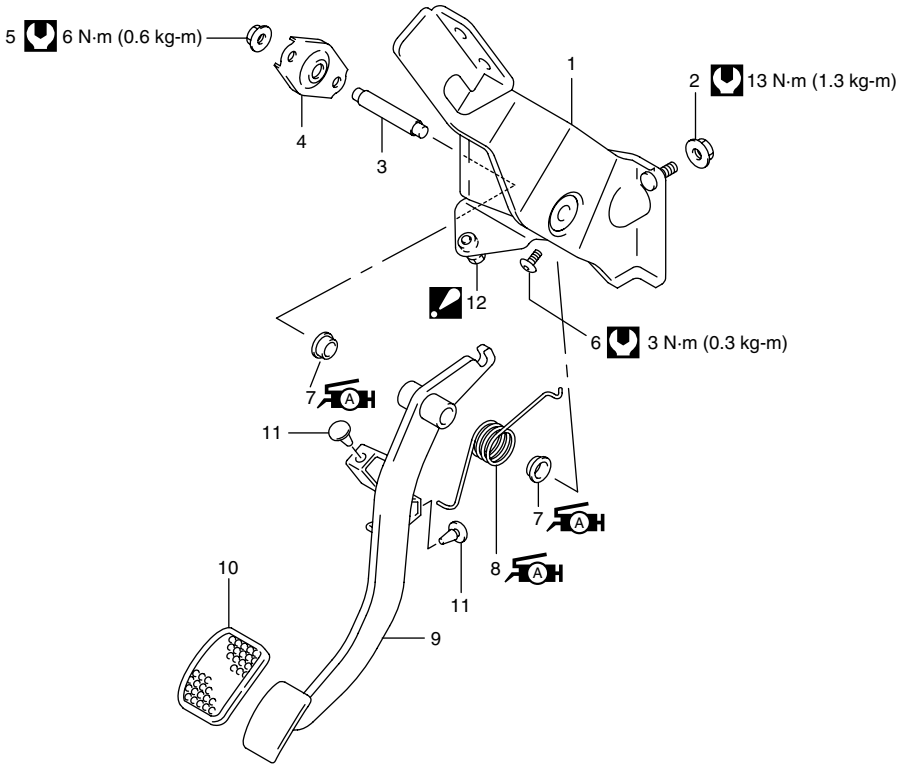

	1. Clutch pedal bracket		8. Pedal spring : Apply grease 99000-25010 to inside surface of spring.
	2. Pedal bracket nut		9. Clutch pedal
	3. Pedal shaft		10. Pedal pad
	4. Pedal shaft bracket		11. Pedal cushion
	5. Pedal shaft bracket nut		12. Clutch pedal stop bolt : Never loosen clutch pedal stop bolt.
	6. Bracket screw		Tightening torque
	7. Pedal bush : Apply grease 99000-25010 to inside and outside surface of spacer.		

Unit Repair Overhaul

Clutch Cover and Clutch Disc Components

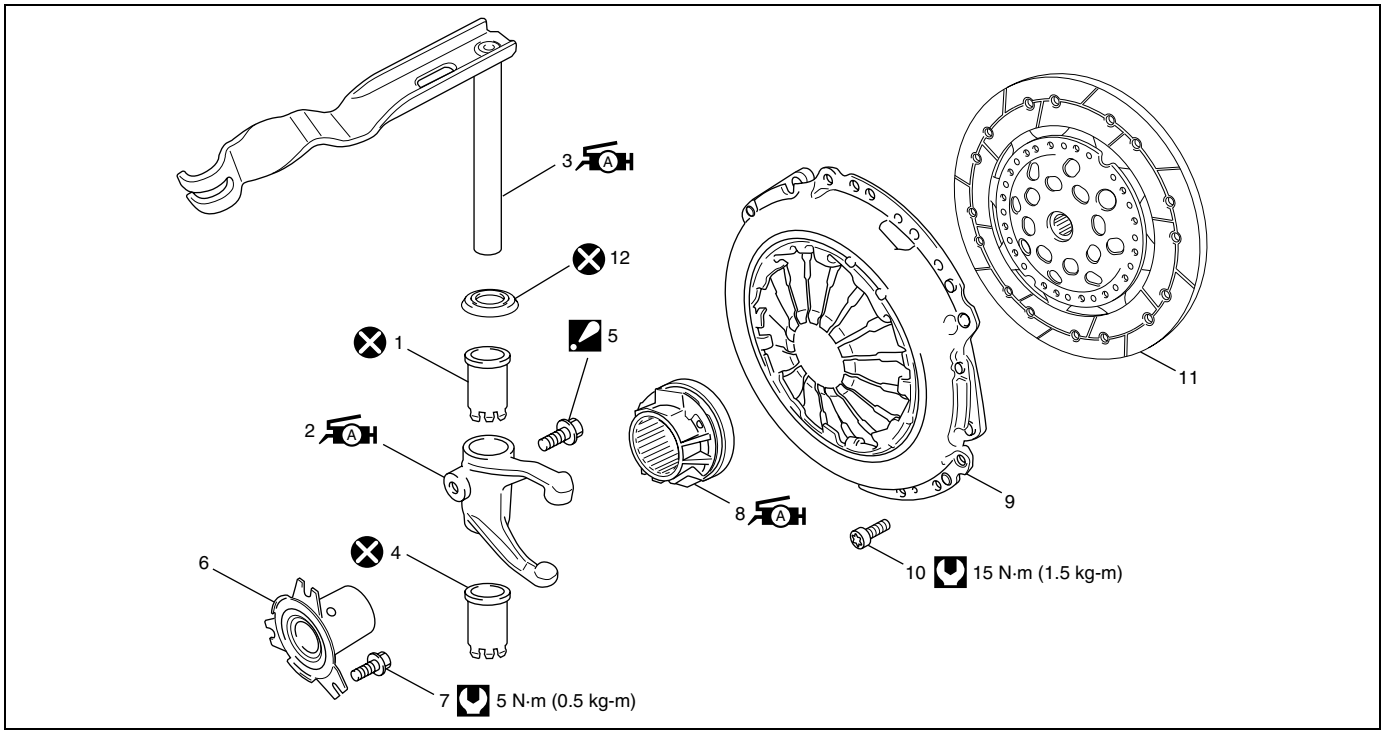

	1. Clutch release shaft No.1 bush		8. Release shaft bearing : Apply grease 99000-25010 to joint of bearing and release shaft and also bearing inside.
	2. Clutch release fork : Apply grease 99000-25010 to release fork end. (3 g (0.1 oz))		9. Clutch cover
	3. Clutch release shaft : Apply grease 99000-25010 to the end of release shaft. (0.12 – 0.36 g (0.004 – 0.010 oz))		10. Clutch cover bolt
	4. Clutch release shaft No.2 bush		11. Clutch disc
	5. Clutch release fork bolt : Tighten 25 N·m (2.5 kg-m, 18.0 lb-ft), 90° and 15° by the specified procedure.		12. Clutch release shaft collar
	6. Cluster gear cover		Tightening torque
	7. Cluster gear cover bolt		Do not reuse.

Clutch Cover and Clutch Disc Removal and Installation

Removal

1) Dismount transaxle assembly referring to “Transaxle Unit Dismounting and Remounting” in Section 7A3.

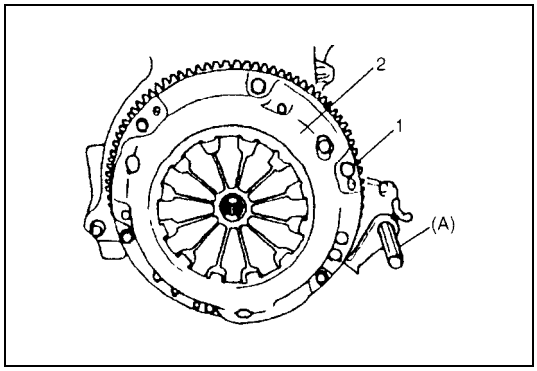

2) Hold flywheel with special tool and remove clutch cover bolts (1), clutch cover (2) and clutch disc.

Special tool
(A): 09924-17810

Installation

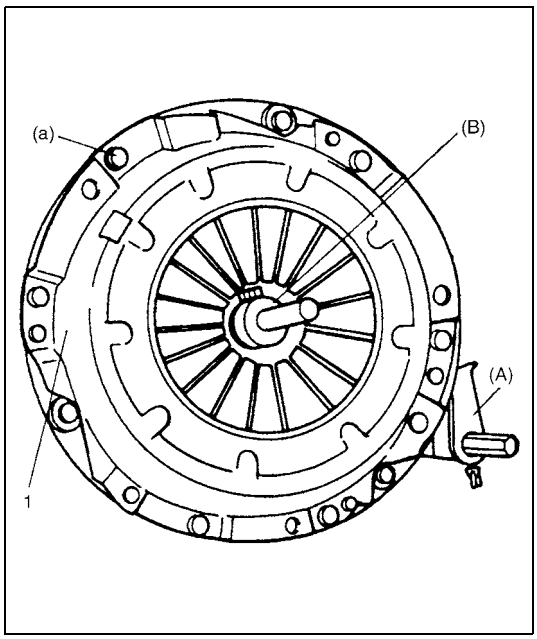

1) Aligning clutch disc to flywheel center using special tool, install clutch cover (1) and bolts. Then tighten bolts to specification.

NOTE:

- **While tightening clutch cover bolts, compress clutch disc with special tool (B) by hand so that disc centered.**
- **Tighten cover bolts little by little evenly in diagonal order.**

Special tool
(A): 09924-17810
(B): 09923-36320

Tightening torque
Clutch cover bolt (a): 15 N·m (1.5 kg-m, 11.0 lb-ft)

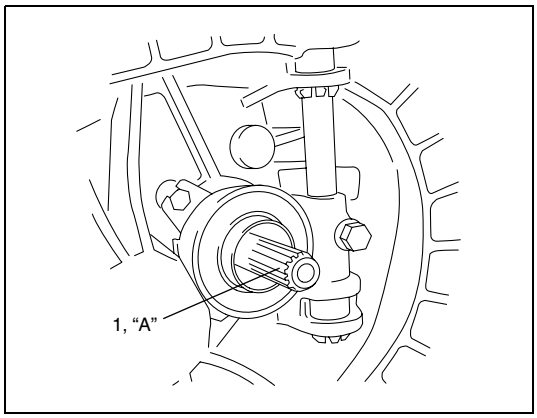

2) Slightly apply grease to cluster gear (1), then join transaxle assembly with engine referring to “Transaxle Unit Dismounting and Remounting” in Section 7A3.

“A”: Grease 99000-25210

NOTE:

When inserting transaxle cluster gear to clutch disc, turn crankshaft little by little to match splines.

Clutch Cover Inspection

Clutch cover

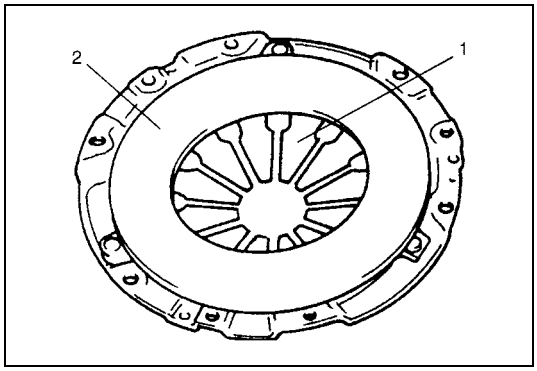

1) Check diaphragm spring (1) for abnormal wear or damage.
2) Inspect pressure plate (2) for wear or heat spots.
3) If abnormality is found, replace clutch cover. Do not disassemble it into diaphragm spring (1) and pressure plate (2).

Clutch Release Mechanism Removal and Installation

Removal

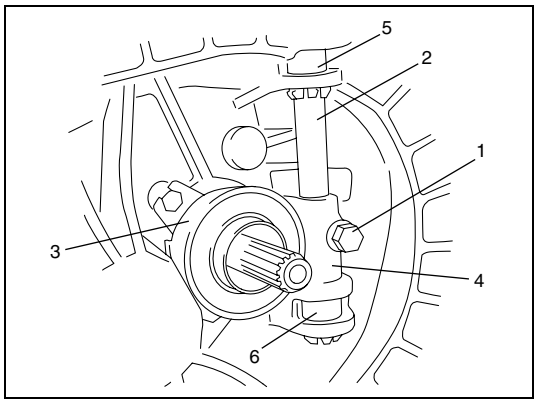

1) Remove clutch release fork bolt (1) and then drive out clutch release shaft (2).
2) Remove release shaft bearing (3) and clutch release fork (4).
3) Drive out clutch release shaft No.1 bush (5) and clutch release shaft No.2 bush (6) from transaxle case.

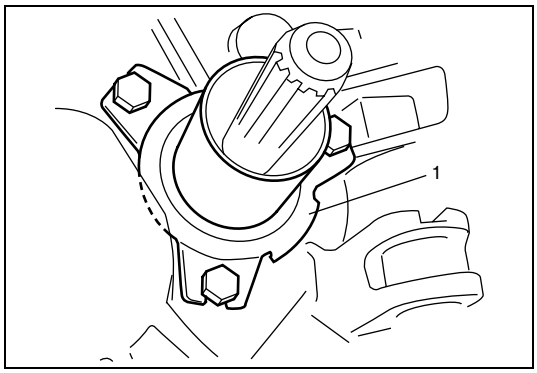

4) Remove cluster gear cover (1).

Installation

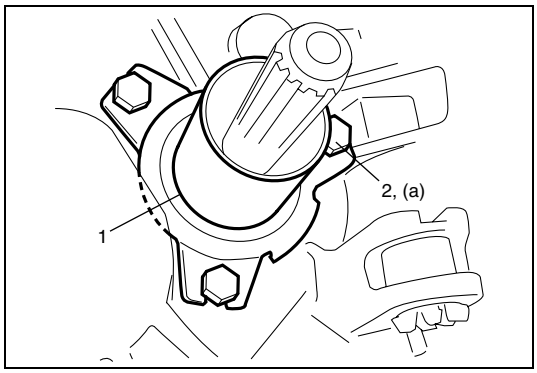

1) Install cluster gear cover (1) and tighten bolt (2) to specified torque.

Tightening torque
Cluster gear cover bolt (a): 5 N·m (0.5 kg-m, 3.5 lb-ft)

2) Drive in clutch release shaft No.1 and No.2 bushes into transaxle case.
3) Install release shaft bearing and release fork.

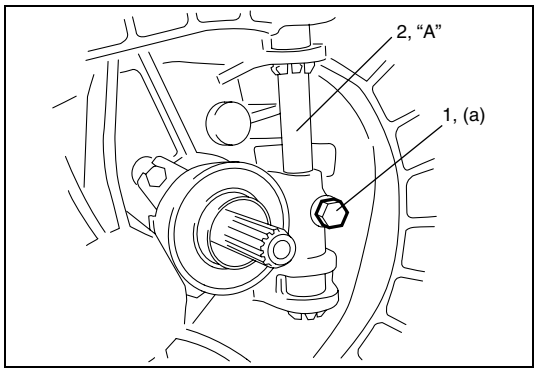

4) Apply grease to clutch release shaft (2) and then install clutch release shaft and tighten fork bolt (1) to specified torque.

"A": Grease 99000-25010

Tightening torque
Clutch release fork bolt
(a): Tighten 25 N·m (2.5 kg-m, 18.0 lb-ft), 90° and 15° by the specified procedure.

Clutch Release Mechanism Inspection

Clutch release shaft

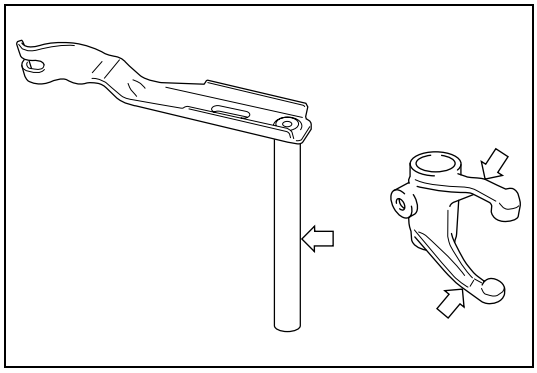

Check clutch release shaft and clutch release fork for deflection or damage.
If abnormality is found, replace it.

Tightening Torque Specification

Fastening part	Tightening torque		
	N•m	kg-m	lb-ft
Clutch cover bolt	15	1.5	11.0
Cluster gear cover bolt	5	0.5	3.5
Clutch release fork bolt	Tighten 25 N·m (2.5 kg-m, 18.0 lb-ft), 90° and 15° by the specified procedure.		
Pedal bracket bolt (for RM413D)	13	1.3	9.5
Pedal bracket nut	13	1.3	9.5
Pedal shaft nut (for RM413D)	23	2.3	16.5
Clutch cable outer bolt (for RB413D)	8.5	0.85	6.0
Pedal shaft bracket nut (for RB413D)	6	0.6	4.0
Bracket screw (for RB413D)	3	0.3	2.0

Required Service Material

Material	Recommended SUZUKI product (Part Number)	Use
Lithium grease	SUZUKI SUPER GREASE A (99000-25010)	• Cable hook and cable nut. • Release fork. • Release shaft. • Release bearing inside. • Pedal spring. • Pedal bush.
	SUZUKI SUPER GREASE I (99000-25210)	Cluster gear spline.

Special Tool

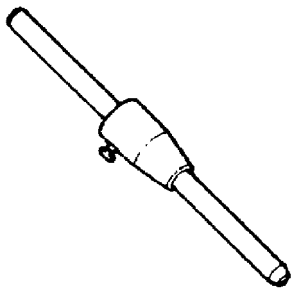	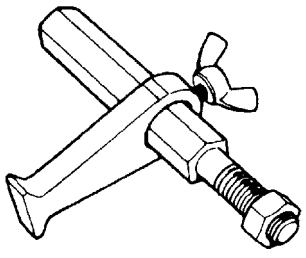
09923-36320 Clutch center guide	09924-17810 Flywheel holder

Prepared by
MAGYAR SUZUKI CORPORATION

1st Ed. Octorber, 2003

Printed in Hungary

Printing: 536

IMPORTANT

WARNING/CAUTION/NOTE

Please read this manual and follow its instructions carefully. To emphasize special information, the words **WARNING, CAUTION** and **NOTE** have special meanings. Pay special attention to the messages highlighted by these signal words.

WARNING:

Indicates a potential hazard that could result in death or injury.

CAUTION:

Indicates a potential hazard that could result in vehicle damage.

NOTE:

Indicates special information to make maintenance easier or instructions clearer.

WARNING:

This service manual is intended for authorized Suzuki dealers and qualified service technicians only. Inexperienced mechanics or mechanics without the proper tools and equipment may not be able to properly perform the services described in this manual.
Improper repair may result in injury to the mechanic and may render the vehicle unsafe for the driver and passengers.

WARNING:

For vehicles equipped with a Supplemental Restraint (Air Bag) System:

- **Service on and around the air bag system components or wiring must be performed only by an authorized SUZUKI dealer. Refer to "Air Bag System Components and Wiring Location View" under "General Description" in air bag system section in order to confirm whether you are performing service on or near the air bag system components or wiring. Please observe all WARNINGS and "Service Precautions" under "On-Vehicle Service" in air bag system section before performing service on or around the air bag system components or wiring. Failure to follow WARNINGS could result in unintentional activation of the system or could render the system inoperative. Either of these two conditions may result in severe injury.**
- **If the air bag system and another vehicle system both need repair, Suzuki recommends that the air bag system be repaired first, to help avoid unintended air bag system activation.**
- **Do not modify the steering wheel, instrument panel or any other air bag system component (on or around air bag system components or wiring). Modifications can adversely affect air bag system performance and lead to injury.**
- **If the vehicle will be exposed to temperatures over 93°C (200°F) (for example, during a paint baking process), remove the air bag system components beforehand to avoid component damage or unintended activation.**

The circle with a slash in this manual means "Do not do this" or "Do not let this happen".

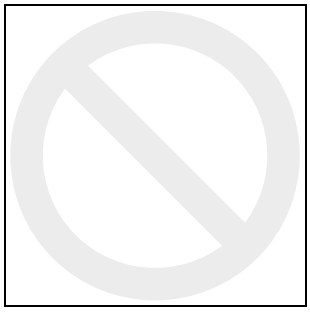

Foreword

This SUPPLEMENTARY SERVICE MANUAL is a supplement to IGNIS (RM413) SERVICE MANUAL and Wagon R+ (RB310/413) SERVICE MANUAL. It has been prepared exclusively for the following applicable model.

Applicable model: IGNIS with Z13DT diesel engine (RM413D) and Wagon R+ with Z13DT diesel engine (RB413D)

It describes only service information for the Z13DT diesel engine, M/T and clutch of the above applicable model. For any section other than the engine, the transmission and clutch, refer to the related service manual below.

When replacing parts or servicing by disassembling, it is recommended to use SUZUKI genuine parts, tools and service materials (lubricant, sealants, etc.) as specified in each description.

All information, illustrations and specifications contained in this literature are based on the latest product information available at the time of publication approval. And used as the main subject of description is the vehicle of standard specifications among others.
Therefore, note that illustrations may differ from the vehicle being actually serviced.
The right is reserved to make changes at any time without notice.

NOTE:

"SUZUKI Dealers" means Authorized SUZUKI Service Workshop (in Europe)

RELATED MANUAL:
For IGNIS (RM413D)

Manual Name	Manual No.
IGNIS (RM413) SERVICE MANUAL	99500U86G00-01E
IGNIS (RM415/RM413D) SUPPLEMENTARY SERVICE MANUAL	99501U86G10-01E
IGNIS (RM413/RM415/RM413D) WIRING DIAGRAM MANUAL	99512U86G20-669

For Wagon R+ (RB413D)

Manual Name	Manual No.
RB413 SERVICE MANUAL	99500-83E00-01E
Wagon R+ (RB413) SUPPLEMENTARY SERVICE MANUAL	99501U83E00-01E
RB310 SERVICE MANUAL	99500U83E10-01E
Wagon R+ (RB310/RB413) SUPPLEMENTARY SERVICE MANUAL	99501U83E10-01E
Wagon R+ (RB310/RB413) SUPPLEMENTARY SERVICE MANUAL	99501U83E20-01E
Wagon R+ (RB310/RB413/RB413D) SUPPLEMENTARY SERVICE MANUAL	99501U83E30-01E
Wagon R+ (RB310/RB413/RB413D) WIRING DIAGRAM MANUAL	99512U83E40-669

MAGYAR SUZUKI CORPORATION

© COPYRIGHT MAGYAR SUZUKI CORPORATION 2004

TABLE OF CONTENTS

ENGINE	
ENGINE GENERAL INFORMATION AND DIAGNOSIS (Z13DT ENGINE)	**6-3**
ENGINE MECHANICAL (Z13DT ENGINE)	**6A3**
ENGINE COOLING (Z13DT ENGINE)	**6B3**
ENGINE FUEL (Z13DT ENGINE)	**6C3**
ENGINE AND EMISSION CONTROL SYSTEM (Z13DT ENGINE)	**6E3**
CRANKING SYSTEM (Z13DT ENGINE)	**6G3**
CHARGING SYSTEM (Z13DT ENGINE)	**6H3**
EXHAUST SYSTEM (Z13DT ENGINE)	**6K3**

TRANSAXLE AND CLUTCH	
MANUAL TRANSAXLE (Z13DT ENGINE MODEL)	**7A3**
CLUTCH (Z13DT ENGINE MODEL)	**7C3**

SECTION 6-3

ENGINE GENERAL INFORMATION AND DIAGNOSIS (Z13DT ENGINE)

WARNING:

For vehicles equipped with a Supplemental Restraint (Air Bag) System:

- **Service on and around the air bag system components or wiring must be performed only by an authorized SUZUKI dealer. Refer to "Air Bag System Components and Wiring Location View" under "General Description" in air bag system section in order to confirm whether you are performing service on or near the air bag system components or wiring. Please observe all WARNINGS and "Precautions" under "On-Vehicle Service" in air bag system section before performing service on or around the air bag system components or wiring. Failure to follow WARNINGS could result in unintentional activation of the system or could render the system inoperative. Either of these two conditions may result in severe injury.**
- **Technical service work must be started at least 90 seconds after the ignition switch is turned to the "LOCK" position and the negative cable is disconnected from the battery. Otherwise, the system may be activated by reserve energy in the Sensing and Diagnostic Module (SDM).**

CONTENTS

General Information 6-3-3
Statement of Cleanliness and Care 6-3-3
General Information on Engine Service 6-3-3
Precaution on fuel system service 6-3-4
Fuel pressure relief procedure 6-3-4
Fuel leakage check procedure 6-3-4
Engine Diagnosis 6-3-5
General Description 6-3-5
Precaution in Diagnosing Trouble 6-3-6
Diagnostic Trouble Code (DTC) Check 6-3-7
Diagnostic Trouble Code (DTC) Clearance 6-3-7
A, Diagnostic System Check 6-3-8
B-01, Diagnostic Trouble Code 6-3-11
B-03, Connect Scan Tool and Establish Communication 6-3-23
B-04, Actuator Test 6-3-24
B-05, Additional Functions 6-3-28
B-06, Programming 6-3-29
B-07, ECU Control 6-3-30
B-08, No Matching Customer Complaint 6-3-31
B-09, Symptom Chart/Customer Complaints 6-3-32
B-10, Complaint: Engine Start 6-3-33
B-11, Complaint: Engine Idling 6-3-34
B-12, Complaint: Engine Behaviour Under Normal Driving Conditions 6-3-36
B-13, Complaint: Engine Performance 6-3-38
B-14, Complaint: Exhaust Gas 6-3-40
B-15, Complaint: Oil/Coolant/Fuel-System 6-3-42
B-16, Complaint: Engine Mechanic 6-3-43
B-17, Check: Functionality of Adjacent Systems 6-3-44
B-18, Check: Intermittent Faults 6-3-45
B-19, Programming ECM 6-3-47
B-20, Immobilizer Check 6-3-48
B-21, Fuel System 6-3-49
B-22, Intake-Air System 6-3-50
B-23, Check: Intake-Air System 6-3-51
B-24, Check: Intake-Air System/Charge-Air System 6-3-52
B-25, Check: Charge-Air System 6-3-53
B-26, Check: Distance Signal 6-3-54
B-27, Check: Pressure Sensor Signal 6-3-55
B-28, Complaint: Engine Temperature 6-3-56
B-29, Check: High Pressure Area 6-3-57
B-30, Check: Low and High Pressure Section 6-3-58
B-31, Check: Low Pressure Section 6-3-59

B-32, Trouble Codes: Check 1 6-3-60
B-33, Trouble Codes: Check 2 6-3-61
B-34, Trouble Codes: Check 3 6-3-62
B-35, Trouble Codes: Check 4 6-3-63
B-36, Trouble Codes: Check 5 6-3-64
C-01, No Communication between Scan Tool and Control Unit 6-3-65
C-02, Control Unit Hard- and Software 6-3-81
C-03, System Voltage Circuit 6-3-82
C-04, Control Unit Main Relay Circuit 6-3-86
C-05, Crankshaft Sensor Circuit 6-3-98
C-06, Fuel Pump Relay Circuit 6-3-102
C-07, 5V Circuit 1 6-3-108
C-08, 5V Circuit 2 6-3-114
C-09, 5V Circuit 3 6-3-120
C-10, Pedal Position Sensor Circuit 6-3-128
C11, Barometer Sensor Circuit 6-3-140
C-12, Boost Pressure Sensor Circuit 6-3-141
C-13, Intake Air Temperature Sensor Circuit 6-3-147
C-14, Mass or Volume Air Flow Circuit 6-3-151
C-15, Engine Coolant Temperature Sensor Circuit 6-3-159
C-16, Fuel Temperature Sensor Circuit 6-3-163
C-17, Fuel Rail Pressure Sensor Circuit 6-3-167
C-18, Rail Oil Pressure Sensor Circuit 6-3-175
C-19, Fuel Rail Pressure Control Valve Circuit 6-3-176
C-20, Camshaft Position Sensor Circuit 6-3-182
C-21, Brake Switch Circuit 6-3-188
C-22, Clutch Switch Circuit 6-3-202
C-23, Injector Circuit 6-3-206
C-24, Cylinder 1 Injector Circuit 6-3-207
C-25, Cylinder 2 Injector Circuit 6-3-213
C-26, Cylinder 3 Injector Circuit 6-3-219
C-27, Cylinder 4 Injector Circuit 6-3-225
C-28, Exhaust Gas Recirculation Valve Circuit 6-3-231
C-29, Air Conditioning System Refrigerant Pressure Sensor 6-3-239
C-30, Air Conditioning System Switch Circuit 6-3-247
C-31, Air Conditioning System Relay Circuit 6-3-254
C-32, Fan Circuit 6-3-264
C-33, Glow Time Relay Circuit 6-3-281
C-34, Glow Time Telltale Circuit 6-3-291
C-35, Filterheating Circuit 6-3-295
C-36, Malfunction Indication Lamp (MIL) Circuit 6-3-305
C-37, Service Telltale Circuit 6-3-309
C-38, Oil Level Telltale Circuit 6-3-313
C-39, Engine Oil Level Circuit 6-3-317
C-40, Vehicle Speed Sensor Circuit 6-3-321
C-41, Function-Group Intake Air System .. 6-3-322
C-42, Function-Group Fuel System 6-3-323
C-43, Function-Group Low Pressure Section 6-3-324
C-44, Function-Group Low and High Pressure Section 6-3-325
C-45, Function-Group High Pressure Area 6-3-326
C-46, Starter Circuit 6-3-327
C-47, System Status Information 6-3-335
C-48, Engine Coolant Temperature Circuit 6-3-336
C-49, Engine Speed Input Signal Circuit 6-3-340
Special Tool 6-3-344

General Information

Statement of Cleanliness and Care

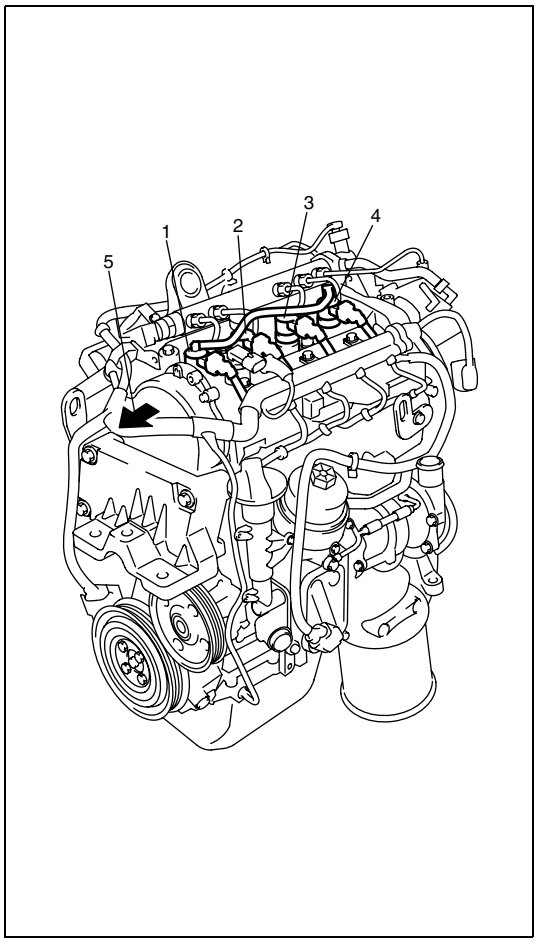

An automobile engine is a combination of many machined, honed, polished and lapped surfaces with tolerances that are measured in the thousands of an millimeter (ten thousands of inch). Accordingly, when any internal engine parts are serviced, care and cleanliness are important. Throughout this section, it should be understood that proper cleaning and protection of machined surfaces and friction areas is part of the repair procedure. This is considered standard shop practice even if not specifically stated.

- A liberal coating of engine oil should be applied to friction areas during assembly to protect and lubricate the surface on initial operation.
- Whenever valve train components, pistons, piston rings, connecting rods, rod bearings and crankshaft journal bearings are removed for service, they should be retained in order. At the time of installation, they should be installed in the same locations and with the same mating surfaces as when removed.
- Battery cables should be disconnected before any major work is performed on the engine. Failure to disconnect cables may result in damage to wire harness or other electrical parts.
- Throughout this manual, the four cylinders of the engine are identified by numbers: No.1 (1), No.2 (2), No.3 (3) and No.4 (4) as counted from crankshaft pulley side (5) to flywheel side.

General Information on Engine Service

The following information on engine service should be noted carefully, as it is important in preventing damage, and in contributing to reliable engine performance.

- When raising or supporting engine for any reason, do not use a jack under oil pan. Due to small clearance between oil pan and oil pump strainer, jacking against oil pan may cause it to be bent against strainer resulting in damaged oil pick-up unit.
- It should be kept in mind, while working on engine, that 12-volt electrical system is capable of violent and damaging short circuits. When performing any work where electrical terminals could possibly be grounded, ground cable of the battery should be disconnected at battery.
- Any time the air cleaner, air cleaner outlet hose, turbocharger, intercooler, intercooler outlet hose or intake manifold is removed, the intake opening should be covered. This will protect against accidental entrance of foreign material which could follow intake passage into cylinder and cause extensive damage when engine is started.

Precaution on fuel system service

- Work must be done with no smoking, in a well-ventilated area and away from any open flames.
- A small amount of fuel may be released after fuel line is disconnected.
  In order to reduce the chance of personal injury, cover fitting to be disconnected with a shop cloth. Put that cloth in an approved container when disconnection is completed.
- Never run engine with main relay disconnected when engine and exhaust system are hot.

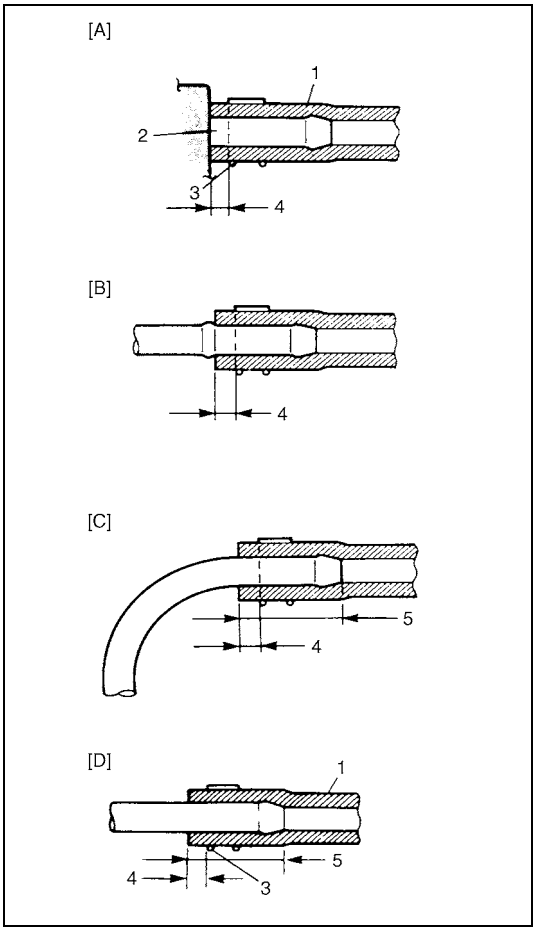

- Fuel or fuel vapor hose connection varies with each type of pipe. When reconnecting fuel or fuel vapor hose, be sure to connect and clamp each hose correctly referring to the figure.
  After connecting, make sure that it has no twist or kink.

[A]:	With short pipe, fit hose as far as it reaches pipe joint as shown.
[B]:	With following type pipe, fit hose as far as its peripheral projection as shown.
[C]:	With bent pipe, fit hose as its bent part as shown or till pipe is about 20 to 30 mm (0.79 – 1.18 in.) into the hose.
[D]:	With straight pipe, fit hose till pipe is, about 20 to 30 mm (0.79 – 1.18 in.) into the hose.
1.	Hose
2.	Pipe
3.	Clamp
4.	Clamp securely at a position 3 to 7 mm (0.12 – 0.27 in.) from hose end.
5.	20 to 30 mm (0.79 – 1.18 in.)

- When installing fuel filter union bolt or plug bolt, always use new gasket and tighten it to specified torque.
- When installing injector, fuel feed pipe or fuel pressure regulator, lubricate its O-ring with spindle oil or fuel.
- When connecting fuel pipe flare nut, first tighten flare nut by hand and then tighten it to specified torque, using back-up wrench.

Fuel pressure relief procedure

Refer to “Precautions” under “Fuel Delivery System” in Section 6E3.

Fuel leakage check procedure

Refer to “Fuel leakage check” under “Fuel Delivery System” in Section 6E3.

Engine Diagnosis

General Description

The main purpose of a vehicle diagnostic concept is locating and eliminating faults in the shortest time possible. Therefore, the following diagnostic strategy has been developed as a guideline that leads technicians straight to the source fault:

Starting point is the vehicle that contains a certain number of electronic systems, e.g. engine management system.
Each of these electronic systems consists of so - called “functional groups” that are functionally related to each other. A Coolant Temperature Sensor Circuit for example represents such a functional group.
Each of the functional groups consists of several components, such as switches, sensors, wires etc. A Coolant Temperature Sensor Circuit for example is made up of a sensor, a wiring harness, a control unit, and the software of the control unit.
Based on this structure, the first diagnostic step should be the identification and localisation of the defective electronic system, next comes the diagnosis of the corresponding defective functional group, and finally, locate and repair of the defective component within that group.

The Diagnostic System Check (described in table A, Diagnostic System Check) of this checking procedure follows that diagnostic path. Diagnosis of an electronic system according to the above described concept always starts with this Main Check.
The instructions described in the table “A, Diagnostic System Check” section must be followed closely. Every time a test or test step is passed without fault, the Diagnostic System Check continues with the next step. Some of the tests include references to related functional groups (tables B-x). When there is a fault, the corresponding functional group tests are performed in order to detect the defective functional group. When that group has been identified, the troubleshooting tables (C-x) are used to locate the faulty component. After repair of the fault, the affected functional group (tables B-x) must be rechecked to continue after this test at the appropriate position of the Diagnostic System Check (table A).
When all test steps of the Diagnostic System Check have been completed successfully, the system is fully operational.

NOTE:

For the connector number and the terminal number discribed in diagnostic flow, refer to “Wiring Diagram Manual” discribed in “Foreword” of this manual.

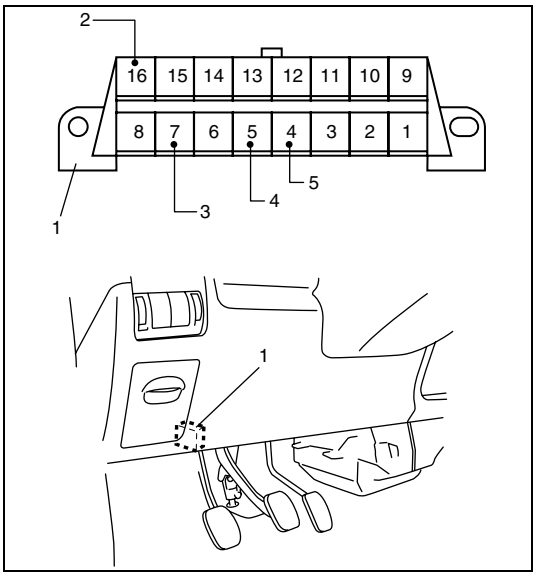

Data Link Connector (DLC)

DLC (1) in compliance with SAE J1962 in its installation position, the shape of connector and pin assignment.

K (4) line of ISO 9141 is used for SUZUKI scan tool or generic scan tool to communication with ECM, ABS control module, EPS controller, SDM and immobilizer control module.

2.	B+
4.	ECM ground
5.	Body ground

Precaution in Diagnosing Trouble

- Don't disconnect couplers from ECM, battery cable from battery, ECM ground wire harness from engine or main fuse before confirming diagnostic information stored in ECM memory.
- Diagnostic information stored in ECM memory can be cleared as well as checked by using SUZUKI scan tool or generic scan tool. Before using scan tool, read its Operator's (Instruction) Manual carefully to have good understanding as to what functions are available and how to use it.
- Be sure to read "Precautions for Electrical Circuit Service" in Section 0A before inspection and observe what is written there.
- ECM registration
  If ECM is replaced, register vehicle specification (fuel injector calibration code, vehicle variant, password for immobilizer system and secret key code for immobilizer system) into ECM referring to "ECM registration" in Section 6E3.
- Fuel injector calibration code registration
  If fuel injector is replaced, register fuel injector calibration code into ECM by performing procedure described in "ECM registration" of Section 6E3.
  Otherwise, it has an adverse effect on engine.

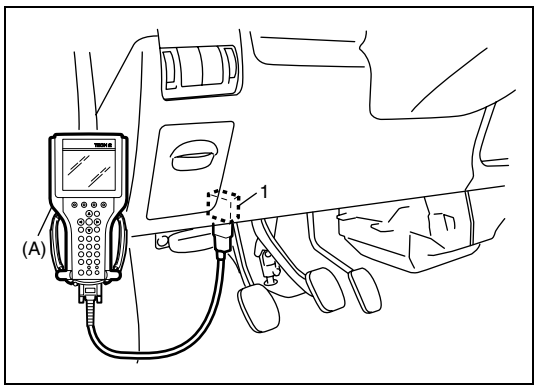

Diagnostic Trouble Code (DTC) Check

1) Prepare generic scan tool or SUZUKI scan tool.
2) Connect it to data link connector (DLC) (1) located on underside of instrument panel at driver's seat side.

Special tool
(A): SUZUKI scan tool

3) Turn ignition switch ON and confirm that MIL and SVS lamp lights.
4) Read DTC, according to instructions displayed on scan tool and print them or write them down. Refer to Scan Tool Operator's Manual for further details.
   If communication between scan tool and ECM is not possible, refer to "C-01, No Communication between Scan Tool and Control Unit".
5) After completing the check, turn ignition switch off and disconnect scan tool from data link connector.

Diagnostic Trouble Code (DTC) Clearance

1) Connect generic scan tool or SUZUKI scan tool to data link connector in the same manner as when making this connection for DTC check.
2) Turn ignition switch OFF and then ON (but engine at stop).
3) Erase DTC and pending DTC according to instructions displayed on scan tool. Refer to Scan Tool Operator's Manual for further details.

NOTE:

When DTC clear command is executed using Suzuki mode of SUZUKI scan tool with engine run, DTC can not be cleared from ECM memory.

4) After completing the clearance, turn ignition switch OFF and disconnect scan tool from data link connector.

A, Diagnostic System Check

A, Diagnostic System Check

Test	Work Order Description	Nominal Value
T01	Customer Complaint Validation	
	• Record customer complaint for later use • Verify and validate the recorded customer complaint	Is the malfunction reproducible?
	Yes: T02	No: T11
T02	System Operation as Designed	
	• Check if the customer complaint is a normal system behaviour and if the customer operates the system properly.	System okay?
	Yes: T03	No: T04
T03	Inform the Customer	
	• Inform the customer, that the system behaviour is normal respectively how to operate the system correctly.	
	Yes: –	No: –
T04	Preliminary Diagnostic Check (Visual Inspection)	
	Perform a visual check of all accessible components of the concerned system using the recorded customer complaint (this should take a maximum of 2 minutes) • All consumers turned off • Verify battery condition • Check the fuses for proper operation • Check if all ground connections are clean, tight and installed properly • Check if all connections and plugs of the concerned system are clean, tight/correctly installed and have no damages. • Check vacuum hoses for splits, kinks, leaks and proper connections. • Check hose connectors and fittings on intake system/vacuum system • After successful test/fault repair proceed to the next test step **NOTE:** **The battery must not be disconnected at this point of the Diagnostic System Check, as the control units of the vehicle could otherwise lose stored diagnostic information.** **If the system operates correctly after replacing a defective fuse, the switched circuits, which are supplied by this fuse, should be checked for short circuit to ground.**	
	Yes: T05	No: –

Test	Work Order Description	Nominal Value
T05	Connect Scan Tool and Establish Communication	
	Before connecting the scan tool, observe the instructions of the scan tool operators manual • Connect scan tool, select concerned Electronic System, establish communication and verify, that the correct control unit is installed: Refer to Table B-03, Connect Scan Tool and Establish Communication • Verify programming of the control unit: Refer to Table B-06, Programming • After successful test/fault repair proceed to the next test step	
	Yes: T07	No: –
T06	Diagnostic Trouble Codes	
	NOTE: **Trouble codes are only a reference on faults in a subgroup of the system. Trouble codes are not a direct reference on a defective component.** • Read and record diagnostic trouble codes • Delete trouble codes • Operate the vehicle over an appropriate distance at various engine speed/load conditions • If a trouble code is stored: Refer to Table B-01, Diagnostic Trouble Code • After successful test/fault repair proceed to the next test step	
	Yes: T07	No: –
T07	Check: Symptom/Customer Complaint Match	
	If a defect has been found in previous test steps, the following test can be skipped (follow result “YES”). • Evaluate customer complaint: Refer to Table B-09, Symptom Chart/Customer Complaints • After successful test/fault repair proceed to the next test step	
	Yes: T08	No: –
T08	No Matching Customer Complaint	
	If a defect has been found in previous test steps, the following test can be skipped (follow result “YES”). • Perform the following evaluation: Refer to Table B-08, No Matching Customer Complaint • After successful test/fault repair proceed to the next test step	
	Yes: T09	No: –

Test	Work Order Description	Nominal Value
T09	System/Function End Test	
	• Check if the customer complaint is repaired and the concerned system is fully operational. **NOTE:** **Drive the vehicle in different driving conditions (engine speed and engine load conditions) over a considerable distance. Pay attention to unusual noise and other system irregularities.** • Turn ignition OFF and ON • Delete trouble codes **NOTE:** **Read the trouble codes again after the test drive and check for symptoms/customer complaints. If a complaint still exists, restart the diagnostic session for a second time. If the problem can not be solved in the second diagnostic session, contact the local support centre.**	
	Yes: –	No: –
T10	Intermittent System Operation	
	Most intermittent problems are caused by faulty electrical connectors, faulty ground connections, broken wiring, temperature problems or radio interference. Intermittent faults can be traced either by using history trouble codes or the snapshot function of the scan tool in combination with the following tests: • Perform the following evaluation: Refer to Table B-18, Check: Intermittent Faults • After successful test/fault repair proceed to the next test step	
	Yes: T09	No: –

B-01, Diagnostic Trouble Code

DTC NO.	Detecting Item	Detecting Condition (DTC will set when detecting:)	MIL	SVS	Referring Table
P0090	Rail Pressure Regulator Valve Circuit Malfunction	• Rail pressure regulator signal circuit open or short • Poor performance of rail pressure regulator	–	1 driving cycle	C-19
P0093	High Pressure Fuel Circuit Leakage	Fuel high pressure circuit problem	–	1 driving cycle	B-32
P0100	Mass Air Flow Circuit Malfunction	• MAF signal circuit open or short • Poor performance of MAF sensor	3 driving cycles	–	B-23
P0106	Manifold Absolute Pressure Range/Performance Problem	Poor performance of MAP sensor	3 driving cycles	–	B-27
P0107	Manifold Absolute Pressure Circuit Low Input	Manifold absolute pressure sensor signal lower than specification	–	1 driving cycle	B-24
P0108	Manifold Absolute Pressure Circuit High Input	Manifold absolute pressure sensor signal higher than specification	3 driving cycles	–	B-25
P0110	Intake Air Temperature Circuit Malfunction	Intake air temperature sensor signal open or short	3 driving cycles	–	C-13
P0115	Engine Coolant temperature Circuit Malfunction	• Engine coolant temperature sensor signal circuit open or short • Poor performance of engine coolant temperature sensor	–	1 driving cycle	C-15
P0168	Fuel Temperature Too High	High fuel temperature (No fault present on the system)	–	–	B-28
P0180	Fuel Temperature Sensor Circuit Malfunction	Fuel temperature sensor signal higher than specification or lower than specification	–	1 driving cycle	C-16
P0190	Fuel Rail Pressure Sensor Circuit Malfunction	• Fuel rail pressure sensor signal low or high input • Poor performance of fuel rail pressure sensor	2 or 3 driving cycles	–	C-17
P0201	Injector Circuit Malfunction Cylinder – 1	• Fuel injector signal circuit open or short • Poor performance of fuel injector	–	1 driving cycle	C-24
P0202	Injector Circuit Malfunction Cylinder – 2	• Fuel injector signal circuit open or short • Poor performance of fuel injector	–	1 driving cycle	C-25
P0203	Injector Circuit Malfunction Cylinder – 3	• Fuel injector signal circuit open or short • Poor performance of fuel injector	–	1 driving cycle	C-26
P0204	Injector Circuit Malfunction Cylinder – 4	• Fuel injector signal circuit open or short • Poor performance of fuel injector	–	1 driving cycle	C-27
P0217	Coolant Temperature Too High	High engine coolant temperature (No fault present on the system)	–	–	B-28
P0230	Fuel Pump Relay Circuit Malfunction	Fuel pump relay signal circuit open or short	–	1 driving cycle	C-06
P0235	Turbo Pressure Sensor Circuit Malfunction	Turbo pressure sensor circuit open or short	–	1 driving cycle	C-12

DTC NO.	Detecting Item	Detecting Condition (DTC will set when detecting:)	MIL	SVS	Referring Table
P0335	Crankshaft Position Sensor Circuit Malfunction	Crankshaft Position Sensor signal no inputted	–	1 driving cycle	C-05
P0340	Camshaft Position Sensor Circuit Malfunction	Camshaft position sensor signal no iputted	–	–	C-20
P0380	Glow Plug Control Circuit Malfunction	Glow plug signal circuit open or short	–	1 driving cycle	C-33
P0381	Glow Indicator Lamp Circuit Malfunction	Glow indicator lamp signal circuit open or short	–	–	C-34
P0400	Exhaust Gas Recirculation Flow Malfunction	Poor performance of EGR valve	3 driving cycles	–	B-36
		Mechanical problem on EGR valve	–	1 driving cycle	
P0403	Exhaust Gas Recirculation Control Circuit	EGR valve control signal circuit open or short	3 driving cycles	–	C-28
P0500	Vehicle Speed Sensor Circuit Malfunction	Incorrect signal from vehicle speed sensor	–	1 driving cycle	B-26
P0504	Brake Switch Circuit Malfunction	Incorrect signal from brake light switch	–	–	C-21
P0530	A/C Pressure Sensor Circuit Malfunction	A/C pressure sensor signal circuit open or short	–	–	C-29
P0560	Power Supply Circuit Malfunction	Power supply circuit low or high input	–	–	C-03
P0571	Brake Switch Circuit Open	Brake lamp switch signal is no inputted	–	–	C-21
P0602	Control Module Program Error	Not registered of vehicle information (fuel injector calibration code, vehicle variant (specification) or security access)	–	1 driving cycle	B-19
P0603	Control Module Internal Fail	Engine control module internal faulty (system error)	–	1 driving cycle	C-02
P0604	Control Module Internal Fail	Engine control module internal faulty (system error)	–	1 driving cycle	C-02
P0605	Control Module Internal Fail	Engine control module internal faulty (system error)	–	1 driving cycle	C-02
P0606	Control Module Internal Fail	Engine control module internal faulty (system error)	–	1 driving cycle	C-02
P0650	Malfunction Indicator Lamp (MIL) Circuit Malfunction	Malfunction Indicator Lamp (MIL) control signal circuit open or short	1 driving cycle	–	C-36
P0683	Glow Plug Feed Back Circuit	Glow plug circuit open or short	–	1 driving cycle	C-33
P0685	Main Relay Circuit Malfunction	Main relay signal circuit open or short	–	1 driving cycle	C-04
P1093	Low Pressure Fuel Circuit Leakage	Fuel low pressure circuit problem	–	1 driving cycle	B-33
P1105	Barometric Pressure Sensor Circuit Malfunction	Poor performance of ECM	3 driving cycles	–	C-11
P1120	Pedal Position Sensor 1 Circuit Malfunction	• Pedal position sensor 1 circuit open or short • Poor performance of pedal position sensor 1	–	1 driving cycle	C-10

DTC NO.	Detecting Item	Detecting Condition (DTC will set when detecting:)	MIL	SVS	Referring Table
P1122	Pedal Position Sensor 2 Circuit Malfunction	Pedal position sensor 2 circuit open or short	–	1 driving cycle	C-10
P1180	Fuel Filter Heater Circuit Malfunction	Fuel heater circuit open or short	–	–	C-35
P1190	Fuel Pressure Regulator Flow	Poor performance of fuel pressure regulator	–	1 driving cycle	C-18
P1191	Fuel Pressure Regulator Circuit Malfunction	Mechanical problem in fuel high pressure section or fuel low pressure section	–	1 driving cycle	B-34
P1192	Rail Pressure Higher Than Maximum	Measured fuel rail pressure is higher than specification	–	1 driving cycle	C-18
P1481	Radiator Fan Output 1 Circuit Malfunction	Radiator fan output 1 circuit open or short	–	1 driving cycle	C-32
P1482	Radiator Fan Output 2 Circuit Malfunction	Radiator fan output 2 circuit open or short	–	1 driving cycle	C-32
P1530	A/C Compressor Signal Circuit Malfunction	A/C relay signal circuit open or short	–	–	C-31
P1600	A/D Converter Malfunction	Engine control module internal faulty (system error)	–	1 driving cycle	C-02
P1610	Secret key/Password Not Program	Refer to “Diagnostic Trouble Code (DTC) Table” in Section 8G3.			
P1611	P assword is Not Matched				
P1612	No Signal From Immobilizer Control Module				
P1613	Immobilizer System Malfunction				
P1614	Incorrect Signal From Immobilizer Control Module				
P1620	Sensor Supply Circuit 1 Fail	Sensor power supply 1 low or high input	–	1 driving cycle	C-07
P1625	Main Relay Circuit Malfunction	Main relay signal circuit open or short	–	1 driving cycle	C-04
P1635	Sensor Supply Circuit 2 Fail	Sensor power supply 2 low or high input	–	1 driving cycle	C-08
P1639	Sensor Supply Circuit 3 Fail	Sensor power supply 3 low or high input	–	1 driving cycle	C-09
P1657	Oil Level Lamp Circuit Malfunction	Oil level lamp control signal circuit open or short	–	–	–
P1660	Shut Off Valve	Mechanical problem in fuel shut off valve	–	1 driving cycle	B-35
P1680	Coolant Temperature Signal	Engine coolant temperature meter signal open or short	–	–	C-48
P1690	Warning Lamp Defect	Service vehicle soon (SVS) lamp control signal circuit open or short	–	–	C-37
P1725	Engine Speed Signal Circuit Malfunction	Tachometer signal circuit open or short	–	–	C-49
P2146	Injector Power Supply Circuit Malfunction	Fuel injector control signal low or high input	–	1 driving cycle	C-23

NOTE:

- **"–" mark in MIL or SVS column indicates that indicator light does not light.**
- **Ignore DTC P1657 because any repair of circuit is not necessary even when it is detected by ECM.**

B-02, Data List

As the data values given below are standard values estimated on the basis of values obtained from the normally operating vehicles by using a scan tool, use them as reference values. Even when the vehicle is in good condition, there may be cases where the checked value does not tall within each specified data range. Therefore, judgment as abnormal should not be made by checking with these data alone.
Also, conditions in the table below that can be checked by the scan tool are those detected by ECM and output from ECM as commands and there may be cases where the engine or actuator is not operating (in the condition) as indicated by the scan tool.

Test	Work Order Description	Nominal Value
T01	Tester Display – Battery Voltage	
	• Ignition ON	11.0 ... 13.5 V
	• Engine OFF	
	• All consumers turned off	
	• Engine starting	greater than 8.0 V
	• Engine running at idle speed, operating temperature	12.0 ... 15.0 V
	Concerned Terminals:	
	E27-1, E27-2, E27-3, E27-50 (For RM413D)	
	G88-1, G88-2, G88-3, G88-50 (For RB413D)	
	Yes: T02	No: C-03
T02	Tester Display – Main Relay	
	• Ignition OFF	OFF
	• Ignition ON	ON
	• Engine OFF	
	• All consumers turned off	
	Concerned Terminals:	
	E27-4, E27-5, E27-6, E27-80 (For RM413D)	
	G88-4, G88-5, G88-6, G88-80 (For RB413D)	
	Yes: T03	No: C-04
T03	Tester Display – Fuel Pump	
	• Ignition ON	OFF
	• Engine OFF	
	• All consumers turned off	
	• Wait at least 20 s	
	• Engine running at idle speed, operating temperature	ON
	Concerned Terminals:	
	E27-75 (For RM413D)	
	G88-75 (For RB413D)	
	Yes: T04	No: C-06
T04	Tester Display – PPS 1 Voltage	
	• Ignition ON	greater than 3.80 V
	• Engine OFF	
	• All consumers turned off	
	• Accelerator pedal actuated to full load stop	
	• Accelerator pedal not actuated	less than 1.00 V
	• Accelerator pedal slightly actuated	greater than 1.00 V
	Concerned Terminals:	
	E27-15, E27-32, E27-35, E27-41, E27-65, E27-83 (For RM413D)	
	G88-15, G88-32, G88-35, G88-41, G88-65, G88-83 (For RB413D)	
	Yes: T05	No: C-10

Test	Work Order Description	Nominal Value
T05	Tester Display – PPS 2 Voltage	
	• Ignition ON • Engine OFF • All consumers turned off • Accelerator pedal actuated to full load stop	greater than 1.8 V
	• Accelerator pedal not actuated	less than 0.50 V
	• Accelerator pedal slightly actuated	greater than 0.50 V
	Concerned Terminals: E27-15, E27-32, E27-35, E27-41, E27-65, E27-83 (For RM413D) G88-15, G88-32, G88-35, G88-41, G88-65, G88-83 (For RB413D)	
	Yes: T06	No: C-10
T06	Tester Display – Calculated Pedal Position	
	• Ignition ON • Engine OFF • All consumers turned off • Accelerator pedal actuated to full load stop	greater than 99 %
	• Accelerator pedal not actuated	less than 1 %
	Concerned Terminals: E27-15, E27-32, E27-35, E27-41, E27-65, E27-83 (For RM413D) G88-15, G88-32, G88-35, G88-41, G88-65, G88-83 (For RB413D)	
	Yes: T07	No: C-10
T07	Tester Display – Closed Throttle Position	
	• Ignition ON • Engine OFF • All consumers turned off • Accelerator pedal actuated to full load stop	Inactive
	• Accelerator pedal not actuated	Active
	Concerned Terminals: E27-15, E27-32, E27-35, E27-41, E27-65, E27-83 (For RM413D) G88-15, G88-32, G88-35, G88-41, G88-65, G88-83 (For RB413D)	
	Yes: T08	No: C-10
T08	Tester Display – Desired Idle	
	• Engine running at idle speed, operating temperature • All consumers turned off • Accelerator pedal not actuated	780 ... 900 RPM.
	Concerned Terminals: C66-43, C66-59 (For RM413D) D26-43, D26-59 (For RB413D)	
	Yes: T09	No: C-05

Test	Work Order Description	Nominal Value
T09	Tester Display – Engine Speed	
	• Ignition ON	greater than 60 RPM.
	• Engine starting	
	• Engine running at idle speed, operating temperature	780 ... 900 RPM.
	• All consumers turned off	
	• Accelerator pedal not actuated	
	• Accelerator pedal briefly actuated to full load stop	850 ... 5000 RPM.
		Scan tool display depending on engine speed
	Concerned Terminals: C66-43, C66-59 (For RM413D) D26-43, D26-59 (For RB413D)	
	Yes: T10	No: C-05
T10	Tester Display – Coolant Temperature	
	• Engine running at idle speed, operating temperature	80 ... 110 °C 176 ... 230 °F 2.50 ... 0.40 V
	• All consumers turned off	
	Concerned Terminals: C66-29, C66-54 (For RM413D) D26-29, D26-54 (For RB413D)	Scan tool display depending on engine condition
	Yes: T11	No: C-15
T11	Tester Display – Fuel Temperature	
	• Ignition ON	–10 ... 80 °C 14 ... 176 °F
	• Engine OFF	
	• All consumers turned off	
	Concerned Terminals: E27-13, E27-61 (For RM413D) G88-13, G88-61 (For RB413D)	
	Yes: T12	No: C-16
T12	Tester Display – Intake Air Temperature	
	• Engine running at idle speed, operating temperature	Scan tool display converges to outside temperature
	• All consumers turned off	
	Concerned Terminals: C66-10, C66-27 (For RM413D) D26-10, D26-27 (For RB413D)	
	Yes: T13	No: C-13
T13	Tester Display – MAF/MAF sensor voltage	
	• Engine running	greater than 20 kg/h greater than 1.70 V
	• All consumers turned off	
	• Accelerator pedal slightly actuated	
	• Engine running at idle speed, operating temperature	2.8 ... 5.5 g/sec 1.00 ... 2.20 V
	• Accelerator pedal not actuated	
	• Wait at least 70 s	5.5 ... 8.3 g/sec 1.70 ... 2.5 V
	Concerned Terminals: C66-14, C66-27, C66-40 (For RM413D) D26-14, D26-27, D26-40 (For RB413D)	
	Yes: T14	No: C-14

Test	Work Order Description	Nominal Value
T14	Tester Display – Barometric Pressure/Barometric Sensor Voltage	
	• Ignition ON • Engine OFF • All consumers turned off • Compare displayed pressure with outside-air pressure **NOTE:** **This parameter is an internal value of the control unit.** **Concerned Terminals:** –	90 ... 110 kPa 3.5 ... 4.5 V Scan tool display is nearly identical to outside-air pressure
	Yes: T15	No: C-11
T15	Tester Display – Turbo Pressure /Turbo Pressure Voltage	
	• Ignition ON • Engine OFF • All consumers turned off • Compare displayed pressure with outside-air pressure • Engine running at idle speed, operating temperature • Increase engine speed to 3500 rpm **Concerned Terminals:** C66-23, C66-24, C66-41 (For RM413D) D26-23, D26-24, D26-41 (For RB413D)	90 ... 110 kPa 1.5 ... 2.0 V Scan tool display is nearly identical to outside-air pressure 90 ... 110 kPa 1.5 ... 2.0 V greater than 110 kPa greater than 2.0 V
	Yes: T16	No: C-12
T16	Tester Display – EGR Valve (Exhaust-Gas Recirculation)	
	• Ignition ON • Engine OFF • All consumers turned off • Engine running at idle speed, operating temperature • Accelerator pedal briefly actuated to full load stop • Accelerator pedal not actuated • Wait at least 70 s **Concerned Terminals:** C66-5, C66-15 (For RM413D) D26-5, D26-15 (For RB413D)	OFF ON OFF
	Yes: T17	No: C-28

Test	Work Order Description	Nominal Value
T17	Tester Display – EGR Solenoid Duty Cycle	
	• Engine running at idle speed, operating temperature	less than 10 %
	• All consumers turned off	
	• Accelerator pedal briefly actuated to full load stop	greater than 40 % Value changing briefly
	• Accelerator pedal not actuated	less than 10 %
	• Wait at least 70 s	
	Concerned Terminals: C66-5, C66-15 (For RM413D) D26-5, D26-15 (For RB413D)	
	Yes: T18	No: C-28
T18	Tester Display – Desired Rail Pressure	
	• Engine running at idle speed, operating temperature	23.00 ... 29.00 MPa
	• All consumers turned off	
	• Accelerator pedal not actuated	
	• Accelerator pedal briefly actuated to full load stop	greater than 26.00 MPa Value changing briefly
	Concerned Terminals: C66-6, C66-8, C66-38 (For RM413D) D26-6, D26-8, D26-38 (For RB413D)	
	Yes: T19	No: C-17
T19	Tester Display – Fuel Rail Pressure	
	• Engine running at idle speed, operating temperature	23.00 ... 29.00 MPa 1.00 ... 1.80 V
	• All consumers turned off	
	• Accelerator pedal not actuated	
	• Accelerator pedal briefly actuated to full load stop	greater than 25.00 MPa greater than 1.80 V
	Concerned Terminals: C66-6, C66-8, C66-38 (For RM413D) D26-6, D26-8, D26-38 (For RB413D)	
	Yes: T20	No: C-17
T20	Tester Display – Rail Pressure Regulator	
	• Engine running at idle speed, operating temperature	greater than 25 %
	• All consumers turned off	
	• Accelerator pedal not actuated	
	• Accelerator pedal briefly actuated to full load stop	Value changing briefly
	Concerned Terminals: C66-4, C66-34, E27-5 (For RM413D) D26-4, D26-34, G88-5 (For RB413D)	
	Yes: T21	No: C-19
T21	Tester Display – Fuel Quantity	
	• Engine running at idle speed, operating temperature	3.0 ... 6.0 mm^3/str
	• All consumers turned off	
	• Accelerator pedal not actuated	
	• Accelerator pedal slightly actuated	greater than 6.0 mm^3/str
	Concerned Terminals: –	
	Yes: T22	No: C-23

Test	Work Order Description	Nominal Value
T22	Tester Display – SOI	
	• Engine running at idle speed, operating temperature • All consumers turned off • Accelerator pedal not actuated **Concerned Terminals:** –	-1.0 ... 3.0 °CA
	Yes: T23	No: C-23
T23	Tester Display – A/C Switch	
	• Ignition ON • Engine OFF • All consumers turned off **NOTE:** **This data list parameter is only valid if the concerned component is installed.**	OFF
	• Engine running at idle speed, operating temperature • Air conditioning system is switched on. **NOTE:** **This data list parameter is only valid if the concerned component is installed.** **Concerned Terminals:** E27-28 (For RM413D) G88-28 (For RB413D)	ON
	Yes: T24	No: C-30
T24	Tester Display – A/C Pressure	
	• Engine running at idle speed, operating temperature • All consumers turned off **NOTE:** **This data list parameter is only valid if the concerned component is installed.**	300...1200 kPa 0.5...1.8 V
	• Air conditioning system is switched on. **NOTE:** **This data list parameter is only valid if the concerned component is installed.** **Concerned Terminals:** E27-10, E27-37, E27-87 (For RM413D) G88-10, G88-37, G88-87 (For RB413D)	greater than 700 kPa greater than 0.8 V
	Yes: T25	No: C-29

Test	Work Order Description	Nominal Value
T25	Tester Display – A/C Magnet Clutch	
	• Engine running at idle speed, operating temperature • All consumers turned off **NOTE:** **This data list parameter is only valid if the concerned component is installed.**	OFF
	• Air conditioning system is switched on. **NOTE:** **This data list parameter is only valid if the concerned component is installed.** **Concerned Terminals:** E27-79 (For RM413D) G88-79 (For RB413D)	ON
	Yes: T26	No: C-31
T26	Tester Display – Radiator Fan	
	• Engine running • All consumers turned off • Coolant temperature is less than 98 °C (208 °F)	OFF
	• Coolant temperature is greater than 97 °C (207 °F) **Concerned Terminals:** E27-7, E27-8 (For RM413D) G88-7, G88-8 (For RB413D)	LOW
	Yes: T27	No: C-32
T27	Tester Display – Glow Relay	
	• Ignition ON • Engine OFF • All consumers turned off	ON
	• Wait at least 10 s **Concerned Terminals:** E27-70, E27-74 (For RM413D) G88-70, G88-74 (For RB413D)	OFF
	Yes: T28	No: C-33
T28	Tester Display – Brake Switch	
	• Ignition ON • Engine OFF • All consumers turned off	OFF
	• Brake pedal actuated **Concerned Terminals:** E27-68, E27-81 (For RM413D) G88-68, G88-81 (For RB413D)	ON
	Yes: T29	No: C-21

Test	Work Order Description	Nominal Value
T29	Tester Display – Vehicle Speed	
	• Ignition ON • Engine OFF • All consumers turned off • Vehicle travelling (constant speed, approximately 30 km/h (19 mph)) **Concerned Terminals:** E27-89 (For RM413D) G88-89 (For RB413D)	0 km/h 0 mph 30 km/h 19 mph Diagnostic tester display converges to speedometer display
	Yes: T30	No: C-40
T30	Tester Display – Service Vehicle Soon (SVS) Indicator Lamp	
	• Ignition ON • Engine OFF • All consumers turned off • Wait at least 5 s **Concerned Terminals:** E27-77 (For RM413D) G88-77 (For RB413D)	ON OFF
	Yes: T31	No: C-37
T31	Tester Display – Glow Indicator Lamp	
	• Ignition ON • Engine OFF • All consumers turned off • Wait at least 10 s **Concerned Terminals:** E27-52 (For RM413D) G88-52 (For RB413D)	The telltale is briefly ON. Off 12V
	Yes: T32	No: C-34
T32	Tester Display – Oil Level Warning	
	• Ignition ON • Engine OFF • All consumers turned off **Concerned Terminals:** E27-26 (For RM413D) G88-26 (For RB413D)	OFF
	Yes: –	No: C-39

B-03, Connect Scan Tool and Establish Communication

Updata the diagnostic software for SUZUKI scan tool referring to “Tech2 Programing Manual” in case that the diagnosis can not be performed due to the old diagnostic software. In case that the diagnosis can not be performed even though the diagnostic software whose version is appropriate, is used, go to “C-01, No Communication between Scan Tool and Control Unit”.

B-04, Actuator Test

Test	Work Order Description	Nominal Value
T01	Tester Display – Fuel Pump Relay Test	
	• Ignition ON • Engine OFF • Press corresponding key in the system main menu to select Output Tests under Misc Test, select the desired test and confirm with ENTER. Follow the instructions in the scan tool display. • After the test is started, the corresponding component can be actuated using the YES/NO keys. • Press NO key OFF • Press YES key ON **Concerned Terminals:** E27-75 (For RM413D) G88-75 (For RB413D)	The fuel pump is not running Noise check: Clicking noise from the relay and Is the fuel pump running?
	Yes: T02	No: C-06
T02	Tester Display – EGR Solenoid Test	
	• Ignition ON • Engine OFF • Press corresponding key in the system main menu to select Output Tests under Misc Test, select the desired test and confirm with ENTER. Follow the instructions in the scan tool display. • After the test is started, the corresponding component can be actuated using the YES/NO keys. • Press NO key OFF • Press YES key ON **Concerned Terminals:** C66-5, C66-15 (For RM413D) D26-5, D26-15 (For RB413D)	Noise check: Clicking noise from the actuator
	Yes: T03	No: C-28

Test	Work Order Description	Nominal Value
T03	Tester Display – Glow plug control	
	• Ignition ON • Engine OFF • Press corresponding key in the system main menu to select Output Tests under Misc Test, select the desired test and confirm with ENTER. Follow the instructions in the scan tool display. • After the test is started, the corresponding component can be actuated using the YES/NO keys. • Press YES key ON • Press NO key OFF **Concerned Terminals:** E27-70, E27-74 (For RM413D) G88-70, G88-74 (For RB413D)	Diagnosis Glow Controller Active Diagnosis Glow Controller Inactive
	Yes: T04	No: C-33
T04	Tester Display – Radiator Fan Test	
	• Ignition ON • Engine OFF • Press corresponding key in the system main menu to select Output Tests under Misc Test, select the desired test and confirm with ENTER. Follow the instructions in the scan tool display. • After the test is started, the corresponding component can be actuated using the YES/NO keys. • Press NO key OFF • Press YES key ON **Concerned Terminals:** E27-7, E27-8 (For RM413D) G88-7, G88-8 (For RB413D)	All cooling fans are switched off The blower speed is increased stepwise. The following component is switched on: Radiator Fan Motor
	Yes: T05	No: C-32

Test	Work Order Description	Nominal Value
T05	Tester Display – Malfunction Indicator Lamp (MIL) Test	
	• Ignition ON • Engine OFF • Press corresponding key in the system main menu to select Output Tests under Misc Test, select the desired test and confirm with ENTER. Follow the instructions in the scan tool display. • After the test is started, the corresponding component can be actuated using the YES/NO keys.	
	• Press NO key OFF	The following component is switched off: Malfunction indicator lamp (MIL)
	• Press YES key ON	The following component is switched on: Malfunction indicator lamp (MIL)
	Concerned Terminals: E27-78 (For RM413D) G88-78 (For RB413D)	
	Yes: T06	No: C-36
T06	Tester Display – Service Vehicle Soon (SVS) Lamp Test	
	• Ignition ON • Engine OFF • Press corresponding key in the system main menu to select Output Tests under Misc Test, select the desired test and confirm with ENTER. Follow the instructions in the scan tool display. • After the test is started, the corresponding component can be actuated using the YES/NO keys.	
	• Press NO key OFF	The following component is switched off: Service vehicle soon (SVS) lamp
	• Press YES key ON	The following component is switched on: Service vehicle soon (SVS) lamp
	Concerned Terminals: E27-77 (For RM413D) G88-77 (For RB413D)	
	Yes: T07	No: C-37

Test	Work Order Description	Nominal Value
T07	Tester Display – Glow Indicator Lamp Test	
	• Ignition ON • Engine OFF • Press corresponding key in the system main menu to select Output Tests under Misc Test, select the desired test and confirm with ENTER. Follow the instructions in the scan tool display. • After the test is started, the corresponding component can be actuated using the YES/NO keys.	
	• Press NO key OFF	The following component is switched off: Glow indicator lamp
	• Press YES key ON	The following component is switched on: Glow indicator lamp
	Concerned Terminals: E27-52 (For RM413D) G88-52 (For RB413D)	
	Yes: –	No: C-34

B-05, Additional Functions

Test	Work Order Description	Nominal Value
T01	Tester Display – Read ECM Identification	
	• Ignition ON • Engine OFF • Press corresponding key in the system main menu to select Data List of ECM Registration under Misc Test, select the desired test and confirm with ENTER. Follow the instructions in the scan tool display. **NOTE:** **This test can be used to monitor various different system specific data.** **Concerned Terminals:** –	Displayed value okay?
	Yes: T02	No: C-02
T02	Tester Display – Display Immobilizer Status	
	Check immobilizer control system status referring to “Scan Tool Data” in Section 8G3.	
	Yes: –	No: C-02

B-06, Programming

Test	Work Order Description	Nominal Value
T01	Tester Display Registration (Immobilizer System)	
	Refer to “Registration Procedure of Immobilizer System Components” in Section 8G3.	Programming okay?
	Yes: T02	No: C-02
T02	Tester Display ECM Setting	
	Refer to “ECM registration” in Section 6E3.	Programming okay?
	Yes: T03	No: C-02
T03	Tester Display Replace Injector	
	Refer to “ECM registration” in Section 6E3.	Programming okay?
	Yes: –	No: C-02

B-07, ECU Control

Test	Work Order Description	Nominal Value
T01	Tester Display – RPM Control	
	• Engine idling • Press corresponding key in the system main menu to select Output Tests under Misc Test, select the desired test and confirm with ENTER. Follow the instructions in the scan tool display. Engine Speed (RPM) Control • After the test is started, the corresponding component can be actuated using the YES/NO keys. • The YES/NO keys can be used to change engine speed in the range from approximately 800 rpm to 3000 rpm. **Concerned Terminals:** –	Engine Speed between 800 rpm and 3000 rpm
	Yes: –	No: C-02

B-08, No Matching Customer Complaint

Test	Work Order Description	Nominal Value
T01	No Matching Customer Complaint	
	The following test steps may or may not be helpful, they are only a proposal. Diagnostic Trouble Codes • Read and record diagnostic trouble codes • Check for history trouble code. If a history trouble code is stored this may indicate the circuit which has the intermittent condition. • Use the following table to obtain the concerned functional group and perform the following additional test steps, while performing the troubleshooting in the C-x tables. Refer to Table B-01, Diagnostic Trouble Code • Move the related connectors, wiring harness and components in order to find the failure. Switch on all electric consumers by turns, because this can cause an electromagnetic interference in a circuit. Use the oscilloscope to observe the wiring harness for disturbances. Operate the system under different conditions over a considerable time. Quick Check • Perform the following evaluation: Refer to Table B-02, Data List Refer to Table B-04, Actuator Test • Check Additional Information Refer to Table B-05, Additional Functions • After successful test/fault repair proceed to the next test step	
	Yes: –	No: –

B-09, Symptom Chart/Customer Complaints

Test	Work Order Description	Nominal Value
T01	Check: Symptom/Customer Complaint Match	
	Select the suitable symptom group, which fits the complaint. • Refer to Table B-10, Complaint: Engine Start • Refer to Table B-11, Complaint: Engine Idling • Refer to Table B-12, Complaint: Engine Behaviour Under Normal Driving Conditions • Refer to Table B-13, Complaint: Engine Performance • Refer to Table B-14, Complaint: Exhaust Gas • Refer to Table B-15, Complaint: Oil/Coolant/Fuel-System • Refer to Table B-16, Complaint: Engine Mechanic • Refer to Table B-17, Check: Functionality of Adjacent Systems	
	Yes: –	No: –

B-10, Complaint: Engine Start

Customer complaint	Remedy
Engine does not start, starter slow/does not turn	Perform the following test step: • Refer to Table C-46, Starter Circuit
Engine does not start, starter runs normal	The following tests must be performed in the given order: • Refer to Table B-02 Data List “T01” Battery Voltage • Refer to Table B-21, Fuel System • Refer to Table B-02, Data List “T18” Desired Rail Pressure • Refer to Table B-02, Data List “T19” Fuel Rail Pressure • Refer to Table B-02, Data List “T20” Rail Pressure Regulator • Refer to Table B-02, Data List “T21” Fuel Quantity • Refer to Table B-02, Data List “T22” SOI • Refer to Table B-02, Data List “T09” Engine Speed The check of the following system is only necessary, if the outside temperature is less than 0 °C (32 °F). • Refer to Table B-04 Actuator Test “T03” Glow Plug Control Test • Refer to Table C-35, Filterheating Circuit
Engine starts poorly, starter runs normal	The following tests must be performed in the given order: • Refer to Table B-02 Data List “T01” Battery Voltage • Refer to Table B-21, Fuel System • Refer to Table B-22, Intake-Air System • Refer to Table B-02 Data List “T14” Barometric Pressure/Barometric Sensor Voltage • Refer to Table B-02 Data List “T10” Coolant Temperature • Refer to Table B-02 Data List “T11” Fuel Temperature • Refer to Table B-02 Data List “T12” Intake Air Temperature • Refer to Table B-02 Data List “T18” Desired Rail Pressure • Refer to Table B-02 Data List “T19” Fuel Rail Pressure • Refer to Table B-02 Data List “T20” Rail Pressure Regulator • Refer to Table B-02 Data List “T21” Fuel Quantity • Refer to Table B-02 Data List “T22” SOI • Refer to Table B-02 Data List “T09” Engine Speed The check of the following system is only necessary, if the outside temperature is less than 0 °C (32 °F). • Refer to Table B-04 Actuator Test “T03” Glow Plug Control Test • Refer to Table C-35, Filterheating Circuit

B-11, Complaint: Engine Idling

Customer complaint	Remedy
Engine stalls at idle speed, no restart possible	The following tests must be performed in the given order: • Refer to Table B-02 Data List “T01” Battery Voltage • Refer to Table B-21, Fuel System • Refer to Table B-02 Data List “T18” Desired Rail Pressure • Refer to Table B-02 Data List “T19” Fuel Rail Pressure • Refer to Table B-02 Data List “T20” Rail Pressure Regulator • Refer to Table B-02 Data List “T21” Fuel Quantity • Refer to Table B-02 Data List “T22” SOI • Refer to Table B-02 Data List “T09” Engine Speed • Check compression
Engine stalls during operation, restart possible	The following tests must be performed in the given order: • Refer to Table B-02 Data List “T01” Battery Voltage • Refer to Table B-21, Fuel System • Refer to Table B-02 Data List “T18” Desired Rail Pressure • Refer to Table B-02 Data List “T19” Fuel Rail Pressure • Refer to Table B-02 Data List “T20” Rail Pressure Regulator • Refer to Table B-02 Data List “T21” Fuel Quantity • Refer to Table B-02 Data List “T22” SOI • Refer to Table B-22, Intake-Air System • Refer to Table B-02 Data List “T09” Engine Speed
Engine does not react on accelerator pedal actuation	The following tests must be performed in the given order: • Refer to Table B-02 Data List “T04” PPS 1 • Refer to Table B-02 Data List “T05” PPS 2 • Refer to Table B-21, Fuel System • Refer to Table B-02 Data List “T18” Desired Rail Pressure • Refer to Table B-02 Data List “T19” Fuel Rail Pressure • Refer to Table B-02 Data List “T20” Rail Pressure Regulator • Refer to Table B-02 Data List “T21” Fuel Quantity • Refer to Table B-02 Data List “T22” SOI
Engine idle speed is increased	The following tests must be performed in the given order: • Refer to Table B-02 Data List “T01” Battery Voltage • Refer to Table B-02 Data List “T04” PPS 1 • Refer to Table B-02 Data List “T05” PPS 2 • Refer to Table B-02 Data List “T08” Desired Idle • Refer to Table B-02 Data List “T09” Engine Speed • Refer to Table B-02 Data List “T12” Intake Air Temperature • Refer to Table B-02 Data List “T11” Fuel Temperature • Refer to Table B-02 Data List “T10” Coolant Temperature • Refer to Table B-02 Data List “T21” Fuel Quantity • Refer to Table B-02 Data List “T22” SOI

Customer complaint	Remedy
Idle speed too low	The following tests must be performed in the given order: • Refer to Table B-02 Data List “T01” Battery Voltage • Refer to Table B-02 Data List “T04” PPS 1 • Refer to Table B-02 Data List “T05” PPS 2 • Refer to Table B-06 Programming “T03” Replace Injector • Refer to Table B-02 Data List “T08” Desired Idle • Refer to Table B-02 Data List “T09” Engine Speed • Refer to Table B-21, Fuel System • Refer to Table B-02 Data List “T21” Fuel Quantity • Refer to Table B-02 Data List “T22” SOI
Surging /shaking while idling	The following tests must be performed in the given order: • Refer to Table B-02 Data List “T01” Battery Voltage • Refer to Table B-02 Data List “T04” PPS 1 • Refer to Table B-02 Data List “T05” PPS 2 • Refer to Table B-06 Programming “T03” Replace Injector • Refer to Table B-21, Fuel System • Refer to Table B-22, Intake-Air System • Refer to Table B-02 Data List “T21” Fuel Quantity • Refer to Table B-02 Data List “T22” SOI • Refer to Table B-02 Data List “T18” Desired Rail Pressure • Refer to Table B-02 Data List “T19” Fuel Rail Pressure • Refer to Table B-02 Data List “T20” Rail Pressure Regulator • Refer to Table B-02 Data List “T08” Desired Idle • Refer to Table B-02 Data List “T09” Engine Speed Check compression pressure The check of the following system is only necessary, if the outside temperature is less than 0 °C (32 °F). • Refer to Table B-04 Actuator Test “T03” Glow Plug control Test
Abnormal combustion sound, engine knocking	The following tests must be performed in the given order: • Refer to Table B-02 Data List “T01” Battery Voltage • Refer to Table B-02 Data List “T10” Coolant Temperature • Refer to Table B-02 Data List “T11” Fuel Temperature • Refer to Table B-02 Data List “T12” Intake Air Temperature • Refer to Table B-02 Data List “T14” Barometric Pressure/Barometric Sensor Voltage • Refer to Table B-22, Intake-Air System • Refer to Table B-04 Actuator Test “T03” Glow Plug Control Test • Refer to Table B-21, Fuel System • Refer to Table B-02 Data List “T18” Desired Rail Pressure • Refer to Table B-02 Data List “T19” Fuel Rail Pressure • Refer to Table B-02 Data List “T20” Rail Pressure Regulator • Refer to Table B-02 Data List “T21” Fuel Quantity • Refer to Table B-02 Data List “T22” SOI

B-12, Complaint: Engine Behaviour Under Normal Driving Conditions

Customer complaint	Remedy
Engine stalls during operation, no restart possible	The following tests must be performed in the given order: • Refer to Table B-02 Data List “T01” Battery Voltage • Refer to Table B-21, Fuel System • Refer to Table B-22, Intake-Air System • Refer to Table B-02 Data List “T18” Desired Rail Pressure • Refer to Table B-02 Data List “T19” Fuel Rail Pressure • Refer to Table B-02 Data List “T20” Rail Pressure Regulator • Refer to Table B-02 Data List “T21” Fuel Quantity • Refer to Table B-02 Data List “T22” SOI • Refer to Table B-02 Data List “T09” Engine Speed The check of the following system is only necessary, if the outside temperature is less than 0 °C (32 °F). • Refer to Table C-35, Filterheating Circuit
Engine stalls during operation, restart possible	The following tests must be performed in the given order: • Refer to Table B-02 Data List “T01” Battery Voltage • Refer to B-21, Fuel System • Refer to Table B-22, Intake-Air System • Refer to Table B-02 Data List “T18” Desired Rail Pressure • Refer to Table B-02 Data List “T19” Fuel Rail Pressure • Refer to Table B-02 Data List “T20” Rail Pressure Regulator • Refer to Table B-02 Data List “T21” Fuel Quantity • Refer to Table B-02 Data List “T22” SOI • Refer to Table B-02 Data List “T09” Engine Speed The check of the following system is only necessary, if the outside temperature is less than 0 °C (32 °F). • Refer to Table C-35, Filterheating Circuit
Erratic engine operation, reproducible misfire	The following tests must be performed in the given order: • Refer to Table B-02 Data List “T01” Battery Voltage • Refer to Table B-02 Data List “T04” PPS 1 • Refer to Table B-02 Data List “T05” PPS 2 • Refer to Table B-06 PROGRAMMING “T03” Replace Injector • Refer to Table B-21, Fuel System • Refer to Table B-02 Data List “T18” Desired Rail Pressure • Refer to Table B-02 Data List “T19” Fuel Rail Pressure • Refer to Table B-02 Data List “T20” Rail Pressure Regulator • Refer to Table B-02 Data List “T21” Fuel Quantity • Refer to Table B-02 Data List “T22” SOI • Refer to Table B-02 Data List “T12” Intake Air Temperature • Refer to Table B-02 Data List “T11” Fuel Temperature • Refer to Table B-02 Data List “T10” Coolant Temperature • Refer to Table B-02 Data List “T14” Barometric Pressure/Barometric Sensor Voltage • Refer to Table B-22, Intake-Air System Check compression pressure The check of the following system is only necessary, if the outside temperature is less than 0 °C (32 °F). • Refer to Table B-04 Actuator Test “T03” Glow Plug Control Test • Refer to Table C-35, Filterheating Circuit

Customer complaint	Remedy
Jerky engine operation	The following tests must be performed in the given order: • Refer to Table B-02 Data List “T01” Battery Voltage • Refer to Table B-02 Data List “T28” Brake Switch • Refer to Table B-02 Data List “T04” PPS 1 • Refer to Table B-02 Data List “T05” PPS 2 • Refer to Table B-06 Programming “T03” Replace Injector • Refer to Table B-21, Fuel System • Refer to Table B-02 Data List “T18” Desired Rail Pressure • Refer to Table B-02 Data List “T19” Fuel Rail Pressure • Refer to Table B-02 Data List “T20” Rail Pressure Regulator • Refer to Table B-02 Data List “T21” Fuel Quantity • Refer to Table B-02 Data List “T22” SOI • Refer to Table B-02 Data List “T10” Coolant Temperature • Refer to Table B-22, Intake-Air System • Refer to Table B-02 Data List “T09” Engine Speed The check of the following system is only necessary, if the outside temperature is less than 0 °C (32 °F). • Refer to Table C-35, Filterheating Circuit

B-13, Complaint: Engine Performance

Customer complaint	Remedy
Reduced cut-off speed	The following tests must be performed in the given order: • Refer to Table B-02 Data List “T01” Battery Voltage • Refer to Table B-02 Data List “T04” PPS 1 • Refer to Table B-02 Data List “T05” PPS 2 • Refer to Table B-02 Data List “T10” Coolant Temperature • Refer to Table B-02 Data List “T11” Fuel Temperature • Refer to Table B-02 Data List “T12” Intake Air Temperature • Refer to Table B-22, Intake-Air System • Refer to Table B-21, Fuel System • Refer to Table B-02 Data List “T18” Desired Rail Pressure • Refer to Table B-02 Data List “T19” Fuel Rail Pressure • Refer to Table B-02 Data List “T20” Rail Pressure Regulator • Refer to Table B-02 Data List “T21” Fuel Quantity • Refer to Table B-02 Data List “T22” SOI • Refer to Table B-02 Data List “T09” Engine Speed The check of the following system is only necessary, if the outside temperature is less than 0 °C (32 °F). • Refer to Table C-35, Filterheating Circuit
Erratic engine operation, reproducible misfire	The following tests must be performed in the given order: • Refer to Table B-02 Data List “T01” Battery Voltage • Refer to Table B-02 Data List “T04” PPS 1 • Refer to Table B-02 Data List “T05” PPS 2 • Refer to Table B-06 Programming “T03” Replace Injector • Refer to Table B-21, Fuel System • Refer to Table B-02 Data List “T18” Desired Rail Pressure • Refer to Table B-02 Data List “T19” Fuel Rail Pressure • Refer to Table B-02 Data List “T20” Rail Pressure Regulator • Refer to Table B-02 Data List “T21” Fuel Quantity • Refer to Table B-02 Data List “T22” SOI • Refer to Table B-02 Data List “T11” Fuel Temperature • Refer to Table B-02 Data List “T12” Intake Air Temperature • Refer to Table B-02 Data List “T14” Barometric Pressure/Barometric Sensor Voltage • Refer to Table B-22, Intake-Air System The check of the following system is only necessary, if the outside temperature is less than 0 °C (32 °F). • Refer to Table B-04 Actuator Test “T03” Glow Time Relay Test • Refer to Table C-35, Filterheating Circuit

Customer complaint	Remedy
Poor engine response	The following tests must be performed in the given order: • Refer to Table B-02 Data List “T01” Battery Voltage • Refer to Table B-06 Programming “T03” Replace Injector • Refer to Table B-21, Fuel System • Refer to Table B-02 Data List “T10” Coolant Temperature • Refer to Table B-02 Data List “T11” Fuel Temperature • Refer to Table B-02 Data List “T12” Intake Air Temperature • Refer to Table B-02 Data List “T14” Barometric Pressure/Barometric Sensor Voltage • Refer to Table B-22, Intake-Air System • Refer to Table B-02 Data List “T04” PPS 1 • Refer to Table B-02 Data List “T05” PPS 2 • Refer to Table B-02 Data List “T18” Desired Rail Pressure • Refer to Table B-02 Data List “T19” Fuel Rail Pressure • Refer to Table B-02 Data List “T20” Rail Pressure Regulator • Refer to Table B-02 Data List “T21” Fuel Quantity • Refer to Table B-02 Data List “T22” SOI The check of the following system is only necessary, if the outside temperature is less than 0 °C (32 °F). • Refer to Table C-35, Filterheating Circuit
Reduced engine performance in all operating conditions	The following tests must be performed in the given order: • Refer to Table B-02 Data List “T01” Battery Voltage • Refer to Table B-06 Programming “T03” Replace Injector • Refer to Table B-22, Intake-Air System • Refer to Table B-21, Fuel System • Refer to Table B-02 Data List “T04” PPS 1 • Refer to Table B-02 Data List “T05” PPS 2 • Refer to Table B-02 Data List “T10” Coolant Temperature • Refer to Table B-02 Data List “T11” Fuel Temperature • Refer to Table B-02 Data List “T12” Intake Air Temperature • Refer to Table B-02 Data List “T14” Barometric Pressure/Barometric Sensor Voltage • Refer to Table B-02 Data List “T18” Desired Rail Pressure • Refer to Table B-02 Data List “T19” Fuel Rail Pressure • Refer to Table B-02 Data List “T20” Rail Pressure Regulator • Refer to Table B-02 Data List “T21” Fuel Quantity • Refer to Table B-02 Data List “T22” SOI • Refer to Table B-02 Data List “T09” Engine Speed The check of the following system is only necessary, if the outside temperature is less than 0 °C (32 °F). • Refer to Table C-35, Filterheating Circuit

B-14, Complaint: Exhaust Gas

Customer complaint	Remedy
Excessive white smoke	The following tests must be performed in the given order: • Refer to Table B-02 Data List “T01” Battery Voltage • Refer to Table B-02 Data List “T21” Fuel Quantity • Refer to Table B-02 Data List “T22” SOI • Refer to Table B-21, Fuel System • Refer to Table B-02 Data List “T10” Coolant Temperature • Refer to Table B-02 Data List “T11” Fuel Temperature • Refer to Table B-02 Data List “T14” Barometric Pressure/Barometric Sensor Voltage • Refer to Table B-22, Intake-Air System The check of the following system is only necessary, if the outside temperature is less than 0 °C (32 °F). • Refer to Table B-04 Actuator Test “T03” Glow Plug Control Test • Refer to Table C-35, Filterheating Circuit
Excessive black/grey smoke	The following tests must be performed in the given order: • Check Engine Oil Level • Refer to Table B-02 Data List “T01” Battery Voltage • Refer to Table B-02 Data List “T10” Coolant Temperature • Refer to Table B-02 Data List “T11” Fuel Temperature • Refer to Table B-02 Data List “T12” Intake Air Temperature • Refer to Table B-02 Data List “T14” Barometric Pressure/Barometric Sensor Voltage • Refer to Table B-22, Intake-Air System • Refer to Table B-21, Fuel System • Refer to Table B-02 Data List “T21” Fuel Quantity • Refer to Table B-02 Data List “T22” SOI • Refer to Table B-02 Data List “T18” Desired Rail Pressure • Refer to Table B-02 Data List “T19” Fuel Rail Pressure • Refer to Table B-02 Data List “T20” Rail Pressure Regulator • Refer to Table B-02 Data List “T09” Engine Speed

Customer complaint	Remedy
Excessive blue smoke	Perform the following tests in the given order until a defect is found. The following tests must be performed in the given order: • Check Engine Oil Level • Refer to Table B-21, Fuel System • Refer to Table B-22, Intake-Air System • Refer to Table B-02 Data List “T10” Coolant Temperature • Refer to Table B-02 Data List “T11” Fuel Temperature • Refer to Table B-02 Data List “T12” Intake Air Temperature • Refer to Table B-02 Data List “T14” Barometric Pressure/Barometric Sensor Voltage • Refer to Table B-02 Data List “T18” Desired Rail Pressure • Refer to Table B-02 Data List “T19” Fuel Rail Pressure • Refer to Table B-02 Data List “T20” Rail Pressure Regulator • Refer to Table B-02 Data List “T21” Fuel Quantity • Refer to Table B-02 Data List “T22” SOI • Refer to Table B-02 Data List “T09” Engine Speed The check of the following system is only necessary, if the outside temperature is less than 0 °C (32 °F). • Refer to Table B-04 Actuator Test “T03” Glow Plug Control Test

B-15, Complaint: Oil/Coolant/Fuel-System

Customer complaint	Remedy
Engine overheated	The following tests must be performed in the given order: • Check the following system/signal for proper operation: Engine Cooling • Refer to Table B-04 Actuator Test “T04” Radiator Fan Test • Refer to Table B-21, Fuel System • Refer to Table B-02 Data List “T01” Battery Voltage • Refer to Table B-02 Data List “T10” Coolant Temperature • Refer to Table B-02 Data List “T11” Fuel Temperature • Refer to Table B-02 Data List “T14” Barometric Pressure/Barometric Sensor Voltage • Refer to Table B-22, Intake-Air System • Check Engine Oil Level • Refer to Table B-02 Data List “T21” Fuel Quantity • Refer to Table B-02 Data List “T22” SOI
Rising engine oil level	The following tests must be performed in the given order: • Check Engine Oil Level • Engine oil pressure • Refer to B-21, Fuel System • Refer to Table B-02 Data List “T21” Fuel Quantity
Leaks in fuel system	Perform the following test step: • Refer to B-21, Fuel System

B-16, Complaint: Engine Mechanic

Customer complaint	Remedy
Mechanical engine problem	The following tests must be performed in the given order: • Check Engine Oil Level • Engine oil pressure • Refer to B-21, Fuel System • Check compression • Engine valve gear

B-17, Check: Functionality of Adjacent Systems

Customer complaint	Remedy
Engine can not be switched off with the ignition lock	The following tests must be performed in the given order: • Refer to Table B-02 Data List “T01” Battery Voltage • Refer to Table B-21, Fuel System • Check Engine Oil Level
Speedometer display defective	The following tests must be performed in the given order: • Refer to Table B-02 Data List “T01” Battery Voltage • Refer to Table B-02 Data List “T29” Vehicle Speed
No speed signal recognized	The following tests must be performed in the given order: • Refer to Table B-02 Data List “T01” Battery Voltage • Refer to Table B-02 Data List “T09” Engine Speed
Glow time telltale defective	The following tests must be performed in the given order: • Refer to Table B-02 Data List “T01” Battery Voltage • Refer to Table B-04 Actuator Test “T07” Glow Indicator Lamp Test

B-18, Check: Intermittent Faults

Test	Work Order Description	Nominal Value
T01	Intermittent System Operation	
	NOTE: **Refer to "Intermittent and Poor Connections Inspection" in Section 0A for farther details.** Preliminary diagnostic check (visual inspection) • Check all sensors, actuators and the wiring harness of the system for corrosion and damages. • Check all connectors of the system for corrosion and for damaged terminals. • Check all ground connections of the system for corrosion and damages • Check if the fault was recognized in an area of strong electromagnetic sources e.g. near radio stations Diagnostic Trouble Codes • Read and record trouble codes • Check for history trouble code. If a history trouble code is stored this may indicate the circuit which has the intermittent condition. History trouble code is leading to an intermittent problem. This trouble codes refer to a related functional group. To find the defective component the following test steps may be helpful. • Use the following table to obtain the concerned functional group and perform the following additional test steps, while performing the troubleshooting in the C-x tables. Refer to Table B-01, Diagnostic Trouble Code Move the related connectors, wiring harness and components in order to find the failure. Switch on all electric consumers by turns, because this can cause an electromagnetic interference in a circuit. Use the oscilloscope to observe the wiring harness for disturbances. Operate the system under different conditions over a considerable time. Snapshot function of the Scan tool • Select the snapshot function of the Scan Tool. Set the Scan Tool to trigger by Any DTC and try to recreate the conditions that may cause the trouble code to be set. Use the Scan tool application to analyse the related data list parameters. The disturbances in the signal can be observed at the trigger point where the trouble code is set.	

Test	Work Order Description	Nominal Value
T01	• Use the following table to obtain the concerned functional group and perform the following additional test steps, while performing the troubleshooting in the C-x tables. Refer to Table B-01, Diagnostic Trouble Code Refer to Table B-02, Data List Move the related connectors, wiring harness and components in order to find the failure. Switch on all electric consumers by turns, because this can cause an electromagnetic interference in a circuit. Use an oscilloscope to observe the wiring harness for disturbances. Operate the system under different conditions over a considerable time. Symptoms/Customer Complaints • Check if one of the symptoms in the following table match the previously recorded customer complaint and perform the following additional test steps, while performing the troubleshooting in the C-x tables. Refer to Table B-09, Symptom Chart/Customer Complaints Move the related connectors, wiring harness and components in order to find the failure. Switch on all electric consumers by turns, because this can cause an electromagnetic interference in a circuit. Use the oscilloscope to observe the wiring harness for disturbances. Operate the system under different conditions over a considerable time. After successful test/fault repair proceed to the next test step	
	Yes: –	No: –

B-19, Programming ECM

Test	Work Order Description	Nominal Value
T01	Programming	
	The following tests must be performed in the given order: • The following programing function has to be performed to program the fuel injector calibration code. – Refer to Table B-06 Programming “T03” Replace Injector • After programming successfully, check if the system malfunction is still present. • If the malfunction is still present, continue with the following tests: • With trouble code P0602 recognized: Refer to Table C-02, Control Unit Hard- and Software • After successful test/fault repair proceed to the next test step	
	Yes: –	No: –

B-20, Immobilizer Check

Test	Work Order Description	Nominal Value
T01	Programming	
	• Verify programming of the control unit: Refer to Table B-06 Programming “T01” Registration (Immobilizer System) • After successful test/fault repair proceed to the next test step	
	Yes: –	No: –

B-21, Fuel System

Test	Work Order Description	Nominal Value
T01	Check: Fuel Pipes and Fuel Filter	System okay?
	CAUTION: **The fuel system is very sensitive. Work should be done with high cleanliness and care. Air in the fuel system can cause damage to the high-pressure fuel pump. That's why the vehicle must never be driven till the fuel tank is empty.** • Check fuel tank for correct fuel sort content • The fuel reserve must be greater than 5 L • Check connected hoses and tubes for kinks, damage etc. • Check the correct fitting of the connections and sealing. (use only sealing, that is approved by the vehicle manufacturer) • Check fuel filter • Check for pressure decrease in the fuel supply section. (leakage, blockage) • Check for pressure decrease in the high pressure section. (leakage, blockage)	
	Yes: T02	No: C-42
T02	Check: Fault Location	
	• Perform quick check actuator test: Refer to Table B-04 Actuator Test “T01” Fuel Pump Relay Test • After successful test/fault repair proceed to the next test step	
	Yes: –	No: –

B-22, Intake-Air System

Test	Work Order Description	Nominal Value
T01	Preliminary Diagnostic Check (Visual Inspection)	
	• Verify mechanical system functions/components Intake system • Check intake system/charge air hoses for leaks (secondary air, porosity and blockages) • Check the hose clamps at the intake-air system/charge-air system for correct fitting. • Check connected hoses and tubes for kinks, damage etc. • Check air filter for fouling and correct mounting. • Check mass air flow sensor for fouling. • Verify mechanical system functions/components Exhaust-gas turbo charger Exhaust system	Test okay?
	Yes: T02	No: C-41
T02	Check: Fault Location	
	The following test steps must be performed in the given order. If a fault is found in one test step, the subsequent test steps can be skipped. • Perform quick check data list: Refer to Table B-02 Data List “T13” MAF/MAF Sensor Voltage • Perform quick check actuator test: Refer to Table B-04 Actuator Test “T02” EGR Solenoid Test • Perform quick check data list: Refer to Table B-02 Data List “T15” Turbo Pressure/Turbo Pressure Voltage • After successful test/fault repair proceed to the next test step	
	Yes: –	No: –

B-23, Check: Intake-Air System

Test	Work Order Description	Nominal Value
T01	Check: Function-Group Intake-Air System/Charge-Air System	
	Perform the following tests in the given order until a defect is found. • Perform the following quick checks: Refer to Table B-22, Intake-Air System • If no defect has been found in previous test steps: Refer to Table C-14, Mass or Volume Air Flow Circuit • After successful test/fault repair proceed to the next test step	
	Yes: –	No: –

B-24, Check: Intake-Air System/Charge-Air System

Test	Work Order Description	Nominal Value
T01	Check: Function-Group Intake-Air System/Charge-Air System	
	Perform the following tests in the given order until a defect is found. • Verify mechanical system functions/components Exhaust-gas turbo charger Exhaust system • Check air filter for fouling and correct mounting. • Check mass air flow sensor for fouling. • Check intake system/charge air hoses for leaks (secondary air, porosity and blockages) • Check connected hoses and tubes for kinks, damage etc. • Perform quick check data list: Refer to Table B-02 Data List “T14” Barometric Pressure/Barometric Sensor Voltage Refer to Table B-02 Data List “T15” Turbo Pressure/Turbo Pressure Voltage • If no defect has been found in previous test steps: Refer to Table C-12, Boost Pressure Sensor Circuit • After successful test/fault repair proceed to the next test step	
	Yes: –	No: –

B-25, Check: Charge-Air System

Test	Work Order Description	Nominal Value
T01	Check: Function-Group Charge-Air System	
	Perform the following tests in the given order until a defect is found. • Verify mechanical system functions/components Exhaust-gas turbo charger Exhaust system • Perform quick check data list: Refer to Table B-02 Data List “T14” Barometric Pressure/Barometric Sensor Voltage Refer to Table B-02 Data List “T15” Turbo Pressure/Turbo Pressure Voltage • If no defect has been found in previous test steps: Refer to Table C-12, Boost Pressure Sensor Circuit • After successful test/fault repair proceed to the next test step	
	Yes: –	No: –

B-26, Check: Distance Signal

Test	Work Order Description	Nominal Value
T01	Vehicle Speed Information Check	
	Perform the following tests in the given order until a defect is found. • Connect scan tool, select concerned Electronic System, establish communication and verify, that the correct control unit is installed: Refer to Table B-03, Connect Scan Tool and Establish Communication • Read and record diagnostic trouble codes • If a trouble code is stored: Refer to Table B-01, Diagnostic Trouble Code • Perform quick check data list: Refer to Table B-02 Data List “T29” Vehicle Speed • If no defect has been found in previous test steps: Refer to Table C-40, Vehicle Speed Sensor Circuit • After successful test/fault repair proceed to the next test step	
	Yes: –	No: –

B-27, Check: Pressure Sensor Signal

Test	Work Order Description	Nominal Value
T01	Check: Datalist Parameter	
	Perform the following tests in the given order until a defect is found. • Perform quick check data list: Refer to Table B-02 Data List “T14” Barometric Pressure/Barometric Sensor Voltage Refer to Table B-02 Data List “T15” Turbo Pressure/Turbo Pressure Voltage • If no defect has been found in previous test steps: Refer to Table C-12, Boost Pressure Sensor Circuit • After successful test/fault repair proceed to the next test step	
	Yes: –	No: –

B-28, Complaint: Engine Temperature

Test	Work Order Description	Nominal Value
T01	Check: Adjacent System	
	• Check the following system for proper operation: Engine cooling system Fuel cooling system	System okay?
	Yes: T02	No: C-42
T02	Check: Datalist Parameter	
	The following test steps must be performed in the given order. If a fault is found in one test step, the subsequent test steps can be skipped. • Perform quick check data list: Refer to Table B-02 Data List “T10” Coolant Temperature Refer to Table B-02 Data List “T11” Fuel Temperature • If no defect has been found in previous test steps: Refer to Table C-47, System Status Information • After successful test/fault repair proceed to the next test step	
	Yes: –	No: –

B-29, Check: High Pressure Area

Test	Work Order Description	Nominal Value
T01	Preliminary Diagnostic Check (Visual Inspection)	System okay?
	CAUTION: **The fuel system is very sensitive. Work should be done with high cleanliness and care. Air in the fuel system can cause damage to the high-pressure fuel pump. That's why the vehicle must never be driven till the fuel tank is empty.** • Check fuel tank for correct fuel sort content The fuel reserve must be greater than 5 L • Check connected hoses and tubes for kinks, damage etc. • Check the correct fitting of the connections and sealing. (use only sealing, that is approved by the vehicle manufacturer) • Check for pressure decrease in the high pressure section. (leakage, blockage) • Perform a visual check of the following components: High-pressure fuel pump Common Rail Fuel Pressure Sensor Fuel Pressure Regulator Injector - Cylinder 1 Injector - Cylinder 2 Injector - Cylinder 3 Injector - Cylinder 4	
	Yes: T02	No: C-45
T02	Check: Mechanics and/or Hydraulics	Test okay?
	• Check injector **NOTE:** **Refer to “Precautions” under “Fuel Delivery System” in Section 6E3 before servicing fuel system.**	
	Yes: –	No: C-45

B-30, Check: Low and High Pressure Section

Test	Work Order Description	Nominal Value
T01	Preliminary Diagnostic Check (Visual Inspection)	System okay?
	CAUTION: **The fuel system is very sensitive. Work should be done with high cleanliness and care. Air in the fuel system can cause damage to the high-pressure fuel pump. That's why the vehicle must never be driven till the fuel tank is empty.** • Check fuel tank for correct fuel sort content The fuel reserve must be greater than 5 L • Check connected hoses and tubes for kinks, damage etc. • Check the correct fitting of the connections and sealing. (use only sealing, that is approved by the vehicle manufacturer) • Check fuel filter • Check for pressure decrease in the fuel supply section. (leakage, blockage) • Check for pressure decrease in the high pressure section. (leakage, blockage)	
	Yes: T02	No: C-44
T02	Actuator Test	
	• Perform quick check actuator test: Refer to Table B-04 Actuator Test “T01” Fuel Pump Relay Test • After successful test/fault repair proceed to the next test step	
	Yes: T03	No: –
T03	Check: Mechanics and/or Hydraulics	Test okay?
	• Check injector **NOTE:** **Refer to “Precautions” under “Fuel Delivery System” in Section 6E3 before servicing fuel system.**	
	Yes: –	No: C-44

B-31, Check: Low Pressure Section

Test	Work Order Description	Nominal Value
T01	Preliminary Diagnostic Check (Visual Inspection)	System okay?
	CAUTION: **The fuel system is very sensitive. Work should be done with high cleanliness and care. Air in the fuel system can cause damage to the high-pressure fuel pump. That's why the vehicle must never be driven till the fuel tank is empty.** • Check fuel tank for correct fuel sort content The fuel reserve must be greater than 5 L • Check connected hoses and tubes for kinks, damage etc. • Check fuel filter • Check for pressure decrease in the fuel supply section. (leakage, blockage)	
	Yes: T02	No: C-43
T02	Actuator Test	
	• Perform quick check actuator test: Refer to Table B-04 Actuator Test “T01” Fuel Pump Relay Test • After successful test/fault repair proceed to the next test step	
	Yes: –	No: –

B-32, Trouble Codes: Check 1

Test	Work Order Description	Nominal Value
T01	Check: Function-Group High Pressure Area	
	Perform the following tests in the given order until a defect is found. • Perform the following quick checks: Refer to Table B-29, Check: High Pressure Area Refer to Table B-31, Check: Low Pressure Section • If no defect has been found in previous test steps: Refer to Table C-45, Function-Group High Pressure Area • After successful test/fault repair proceed to the next test step	
	Yes: –	No: –

B-33, Trouble Codes: Check 2

Test	Work Order Description	Nominal Value
T01	Check: Fuel Pipes and Fuel Filter	
	Perform the following tests in the given order until a defect is found. • Perform the following quick checks: Refer to Table B-31, Check: Low Pressure Section • If no defect has been found in previous test steps: Refer to Table C-43, Function-Group Low Pressure Section • After successful test/fault repair proceed to the next test step	
	Yes: –	No: –

B-34, Trouble Codes: Check 3

Test	Work Order Description	Nominal Value
T01	Check: Diagnostic Trouble Code stored	
	• Is the trouble code P0201 stored?	
	Yes: C-24	No: T02
T02	Check: Diagnostic Trouble Code stored	
	• Is the trouble code P0202 stored?	
	Yes: C-25	No: T03
T03	Check: Diagnostic Trouble Code stored	
	• Is the trouble code P0203 stored?	
	Yes: C-26	No: T04
T04	Check: Diagnostic Trouble Code stored	
	• Is the trouble code P0204 stored?	
	Yes: C-27	No: T05
T05	Check: Function-Group High Pressure Area	
	Perform the following tests in the given order until a defect is found. • Perform the following quick checks: Refer to Table B-30, Check: Low and High Pressure Section • If no defect has been found in previous test steps: Refer to Table C-44, Function-Group Low and High Pressure Section • After successful test/fault repair proceed to the next test step	
	Yes: –	No: –

B-35, Trouble Codes: Check 4

Test	Work Order Description	Nominal Value
T01	Check: Fault Location	
	Perform the following tests in the given order until a defect is found. • Perform quick check actuator test: Refer to Table B-04 Actuator Test “T01” Fuel Pump Relay Test • If no defect has been found in previous test steps: Refer to Table C-42, Function-Group Fuel System • After successful test/fault repair proceed to the next test step	
	Yes: –	No: –

B-36, Trouble Codes: Check 5

Test	Work Order Description	Nominal Value
T01	Preliminary Diagnostic Check (Visual Inspection)	
	Perform the following tests in the given order until a defect is found. • Perform the following quick checks: Refer to Table B-22, Intake-Air System • If no defect has been found in previous test steps: Refer to Table C-28, Exhaust Gas Recirculation Valve Circuit • After successful test/fault repair proceed to the next test step	
	Yes: –	No: –

C-01, No Communication between Scan Tool and Control Unit

Test Table (For RM413D)

Test	Work Order Description	Nominal Value
T01	Check: Interruption of Voltage Supply Circuit	
	• Ignition OFF • All consumers turned off • Measure voltage between the following terminals: Data Link Connector – Wiring harness connector (wiring harness side) terminal G56-16 & Ground	greater than 11 V
	Yes: T02	No: T18
T02	Check: Short to Ground/Interruption of Voltage Supply Circuit	
	• Disconnect wiring harness connector from: ECM (Wiring Harness Connector E27) • Measure voltage between the following terminals: ECM – Wiring harness connector (wiring harness side) terminal E27-50 & Ground	greater than 11 V
	Yes: T03	No: E16
T03	Check: Short to Ground/Interruption of Voltage Supply Circuit	
	• Ignition ON • Measure voltage between the following terminals: ECM – Wiring harness connector (wiring harness side) terminal E27-23 & Ground	greater than 11 V
	Yes: T04	No: T06
T04	Check: Interruption of Signal Circuit	
	• Ignition OFF • Disconnect wiring harness connector from: Immobilizer Control Module • Measure resistance between the following terminals: Immobilizer Control Module – Wiring harness connector (wiring harness side) terminal G50-7 & ECM – Wiring harness connector (wiring harness side) terminal E27-88	less than 5 Ohm
	Yes: T05	No: E03
T05	Check: Circuit Interruption of Ground Circuit	
	• Measure resistance between the following terminals: Data Link Connector – Wiring harness connector (wiring harness side) terminal G56-4 & Ground	less than 5 Ohm
	Yes: E01	No: E02

Test	Work Order Description	Nominal Value
T06	Check: Short to Ground/Interruption of Voltage Supply Circuit	
	• Remove electrical component from socket: Circuit Fuse • Check the following component for proper operation: Circuit Fuse	Test okay?
	Yes: T07	No: T16
T07	Check: Interruption of Voltage Supply Circuit	
	• Measure voltage between the following terminals: Circuit Fuse – Input contact & Ground	greater than 11 V
	Yes: E04	No: T08
T08	Check: Short to Ground/Interruption of Voltage Supply Circuit	
	• Ignition OFF • Disconnect wiring harness connector from: Ignition Switch • Measure voltage between the following terminals: Ignition Switch – Wiring harness connector (wiring harness side) terminal G05-5 & Ground	greater than 11 V
	Yes: E05	No: T09
T09	Check: Short to Ground/Interruption of Voltage Supply Circuit	
	• Remove electrical component from socket: Circuit Main Fuse • Check the following component for proper operation: Circuit Main Fuse	Test okay?
	Yes: T10	No: T11
T10	Check: Interruption of Voltage Supply Circuit	
	• Measure voltage between the following terminals: Circuit Main Fuse – Input contact & Ground	greater than 11 V
	Yes: E06	No: E07
T11	Check: Short to Ground of Voltage Supply Circuit	
	• Connect fused jumper wire to: Circuit Main Fuse – Output contact & Battery voltage • Check the following component for proper operation: Fuse of the fused jumper wire	Test okay?
	Yes: T12	No: E13

Test	Work Order Description	Nominal Value
T12	Check: Short to Ground of Voltage Supply Circuit	
	• Remove fused jumper wire • Connect fused jumper wire to: Ignition Switch – Wiring harness connector (wiring harness side) terminal G05-4 & Battery voltage • Check the following component for proper operation: Fuse of the fused jumper wire	Test okay?
	Yes: T13	No: E12
T13	Check: Short to Ground of Voltage Supply Circuit	
	• Remove fused jumper wire • Connect fused jumper wire to: Ignition Switch – Wiring harness connector (wiring harness side) terminal G05-2 & Battery voltage • Check the following component for proper operation: Fuse of the fused jumper wire	Test okay?
	Yes: T14	No: E11
T14	Check: Short to Ground of Voltage Supply Circuit	
	• Remove fused jumper wire • Connect fused jumper wire to: Ignition Switch – Wiring harness connector (wiring harness side) terminal G05-1 & Battery voltage • Check the following component for proper operation: Fuse of the fused jumper wire	Test okay?
	Yes: T15	No: E10
T15	Check: Component	
	• Remove fused jumper wire • Disconnect wiring harness connector from: Starting Motor – Wiring harness connector (wiring harness side) wiring colour C46-1 • Connect fused jumper wire to: Ignition Switch – Wiring harness connector (wiring harness side) terminal G05-3 & Battery voltage • Check the following component for proper operation: Fuse of the fused jumper wire	Test okay?
	Yes: E08	No: E09

Test	Work Order Description	Nominal Value
T16	Check: Component	
	• Connect fused jumper wire to: Circuit Fuse – Output contact & Battery voltage • Check the following component for proper operation: Fuse of the fused jumper wire	Test okay?
	Yes: E01	No: T17
T17	Check: Short to Ground of Voltage Supply Circuit	
	• Disconnect wiring harness connector from: Glow Controller • Insert new fuse into the socket of the fused jumper wire and then check this fuse for proper operation. • Disconnect each of the following components/control units from the wiring harness consecutively and check the fuse of the fused jumper wire for proper operation each time: – ECM – Immobilizer Control Module – Clutch Switch – MAF and IAT Sensor – Fuel Heating Relay – Compressor Relay – Fuel Pump Relay – Radiator Fan Relay No.1, No.2, No.3	Test okay?
	Yes: E14	No: E15
T18	Check: Short to Ground/Interruption of Voltage Supply Circuit	
	• Remove electrical component from socket: Circuit Fuse • Check the following component for proper operation: Circuit Fuse	Test okay?
	Yes: T19	No: T25
T19	Check: Interruption of Voltage Supply Circuit	
	• Measure voltage between the following terminals: Circuit Fuse – Input contact & Ground	greater than 11 V
	Yes: E17	No: T20
T20	Check: Interruption of Voltage Supply Circuit	
	• Remove electrical component from socket: Circuit Main Fuse • Check the following component for proper operation: Circuit Main Fuse	Test okay?
	Yes: T21	No: T24
T21	Check: Interruption of Voltage Supply Circuit	
	• Measure voltage between the following terminals: Circuit Main Fuse – Input contact & Ground	greater than 11 V
	Yes: E18	No: T22

Test	Work Order Description	Nominal Value
T22	Check: Component	
	• Remove electrical component from socket: System Main Fuse • Check the following component for proper operation: System Main Fuse	Test okay?
	Yes: T23	No: E21
T23	Check: Interruption of Voltage Supply Circuit	
	• Measure voltage between the following terminals: System Main Fuse – Input contact & Ground	greater than 11 V
	Yes: E19	No: E20
T24	Check: Short to Ground of Voltage Supply Circuit	
	• Connect fused jumper wire to: Circuit Main Fuse – Output contact & Battery voltage • Check the following component for proper operation: Fuse of the fused jumper wire	Test okay?
	Yes: E18	No: E22
T25	Check: Component	
	• Connect fused jumper wire to: Circuit Fuse – Output contact & Battery voltage • Check the following component for proper operation: Fuse of the fused jumper wire	Test okay?
	Yes: E23	No: T26
T26	Check: Component	
	• Remove electrical component from socket: Radio • Insert new fuse into the socket of the fused jumper wire and then check this fuse for proper operation. • Disconnect each of the following components/control units from the wiring harness consecutively and check the fuse of the fused jumper wire for proper operation each time: ECM (Wiring Harness Connector E27) Combination Meter Interior light Information Display Clock	Test okay?
	Yes: E14	No: E24

Result Table (For RM413D)

Result	Cause Of Fault
E01	• Defective component: ECM **NOTE:** **If ECM is replaced, register vehicle specification into ECM by performing procedure described in "ECM registration" in Section 6E3.**
E02	• Circuit interruption between: Data Link Connector – Wiring harness connector (wiring harness side) terminal G56-4 & Ground
E03	• Circuit interruption between: ECM – Wiring harness connector (wiring harness side) terminal E27-88 & Immobilizer Control Module – Wiring harness connector (wiring harness side) terminal G50-7
E04	• Circuit interruption between: Circuit Fuse – Output contact & ECM – Wiring harness connector (wiring harness side) terminal E27-23
E05	• Circuit interruption between: Ignition Switch – Wiring harness connector (wiring harness side) terminal G05-2 & Circuit Fuse – Input contact or • Defective component: Ignition Switch
E06	• Circuit interruption between: Circuit Main Fuse – Output contact & Ignition Switch – Wiring harness connector (wiring harness side) terminal G05-5
E07	• Circuit interruption between: System Main Fuse – Output contact & Circuit Main Fuse – Input contact
E08	• Defective component: Ignition Switch or Starting Motor
E09	• Short circuit to ground between: Ignition Switch – Wiring harness connector (wiring harness side) terminal G05-3 & Starting Motor – Wiring harness connector (wiring harness side) terminal C46-1
E10	• Short circuit to ground between: Ignition Switch – Wiring harness connector (wiring harness side) terminal G05-1 & Circuit Fuses – Input contact

Result	Cause Of Fault
E11	• Short circuit to ground between: Ignition Switch – Wiring harness connector (wiring harness side) terminal G05-2 & Circuit Fuses – Input contact
E12	• Short circuit to ground between: Ignition Switch – Wiring harness connector (wiring harness side) terminal G05-4 & Circuit Fuses – Input contact
E13	• Short circuit to ground between: Circuit Main Fuse – Output contact & Ignition Switch – Wiring harness connector (wiring harness side) terminal G05-5
E14	• If the nominal value is reached during one of the measurements, the component/control unit that has been disconnected immediately before that measurement is defective. **NOTE:** **If ECM is replaced, register vehicle specification into ECM by performing procedure described in "ECM registration" in Section 6E3.**
E15	• Short circuit to ground between: Circuit Fuse – Output contact & ECM – Wiring harness connector (wiring harness side) terminal E27-23 & Wiring harness connector terminals of all components (wiring harness side), which were disconnected from the wiring harness during this trouble shooting session
E16	• Circuit interruption between: Circuit Fuse – Output contact & ECM – Wiring harness connector (wiring harness side) terminal E27-50
E17	• Circuit interruption between: Circuit Fuse – Output contact & Data Link Connector – Wiring harness connector (wiring harness side) terminal G56-16
E18	• Circuit interruption between: Circuit Main Fuse – Output contact & Circuit Fuse – Input contact
E19	• Circuit interruption between: System Main Fuse – Output contact & Circuit Main Fuse – Input contact
E20	• Circuit interruption between: Battery – Positive (+) terminal & System Main Fuse – Input contact or • Defective component: Battery

Result	Cause Of Fault
E21	• Short circuit to ground between: System Main Fuse – Output contact & Generator – Wiring harness connector (wiring harness side) terminal C47-1 & Circuit Main Fuses – Input contact or • Defective component: Generator
E22	• Short circuit to ground between: Circuit Main Fuse – Output contact & Circuit Fuses – Input contact
E23	• Defective component: Scan Tool
E24	• Short circuit to ground between: Circuit Fuse – Output contact & ECM – Wiring harness connector (wiring harness side) terminal E27-50 & Radio – Wiring harness connector (wiring harness side) terminal G28-8 & Clock – Wiring harness connector (wiring harness side) terminal G30-1 & Information Display – Wiring harness connector (wiring harness side) terminal G25-8 & Combination Meter – Wiring harness connector (wiring harness side) terminal G22-12 & Data Link Connector – Wiring harness connector (wiring harness side) terminal G56-16 & Interior Light – Wiring harness connector (Wiring harness side) terminal K02-2 & Interior Light – Wiring harness connector (Wiring harness side) terminal O01-2 or • Defective component: ECM **NOTE:** **If ECM is replaced, register vehicle specification into ECM by performing procedure described in “ECM registration” in Section 6E3.**

Test Table (For RB413D)

Test	Work Order Description	Nominal Value
T01	Check: Interruption of Voltage Supply Circuit	
	• Ignition OFF • All consumers turned off • Measure voltage between the following terminals: Data Link Connector – Wiring harness connector (wiring harness side) terminal G09-16 & Ground	greater than 11 V
	Yes: T02	No: T18
T02	Check: Short to Ground/Interruption of Voltage Supply Circuit	
	• Disconnect wiring harness connector from: ECM (Wiring Harness Connector G88) • Measure voltage between the following terminals: ECM – Wiring harness connector (wiring harness side) terminal G88-50 & Ground	greater than 11 V
	Yes: T03	No: E16
T03	Check: Short to Ground/Interruption of Voltage Supply Circuit	
	• Ignition ON • Measure voltage between the following terminals: ECM – Wiring harness connector (wiring harness side) terminal G88-23 & Ground	greater than 11 V
	Yes: T04	No: T06
T04	Check: Interruption of Signal Circuit	
	• Ignition OFF • Disconnect wiring harness connector from: Immobilizer Control Module • Measure resistance between the following terminals: Immobilizer Control Module – Wiring harness connector (wiring harness side) terminal G17-7 & ECM – Wiring harness connector (wiring harness side) terminal G88-88	less than 5 Ohm
	Yes: T05	No: E03
T05	Check: Circuit Interruption of Ground Circuit	
	• Measure resistance between the following terminals: Data Link Connector – Wiring harness connector (wiring harness side) terminal G09-4 & Ground	less than 5 Ohm
	Yes: E01	No: E02
T06	Check: Short to Ground/Interruption of Voltage Supply Circuit	
	• Remove electrical component from socket: Circuit Fuse • Check the following component for proper operation: Circuit Fuse	Test okay?
	Yes: T07	No: T16

Test	Work Order Description	Nominal Value
T07	Check: Interruption of Voltage Supply Circuit	
	• Measure voltage between the following terminals: Circuit Fuse – Input contact & Ground	greater than 11 V
	Yes: E04	No: T08
T08	Check: Short to Ground/Interruption of Voltage Supply Circuit	
	• Ignition OFF • Disconnect wiring harness connector from: Ignition Switch • Measure voltage between the following terminals: Ignition Switch – Wiring harness connector (wiring harness side) terminal G24-5 & Ground	greater than 11 V
	Yes: E05	No: T09
T09	Check: Short to Ground/Interruption of Voltage Supply Circuit	
	• Remove electrical component from socket: Circuit Main Fuse • Check the following component for proper operation: Circuit Main Fuse	Test okay?
	Yes: T10	No: T11
T10	Check: Interruption of Voltage Supply Circuit	
	• Measure voltage between the following terminals: Circuit Main Fuse – Input contact & Ground	greater than 11 V
	Yes: E06	No: E07
T11	Check: Short to Ground of Voltage Supply Circuit	
	• Connect fused jumper wire to: Circuit Main Fuse – Output contact & Battery voltage • Check the following component for proper operation: Fuse of the fused jumper wire	Test okay?
	Yes: T12	No: E13
T12	Check: Short to Ground of Voltage Supply Circuit	
	• Remove fused jumper wire • Connect fused jumper wire to: Ignition Switch – Wiring harness connector (wiring harness side) terminal G24-4 & Battery voltage • Check the following component for proper operation: Fuse of the fused jumper wire	Test okay?
	Yes: T13	No: E12

Test	Work Order Description	Nominal Value
T13	Check: Short to Ground of Voltage Supply Circuit	
	• Remove fused jumper wire • Connect fused jumper wire to: Ignition Switch – Wiring harness connector (wiring harness side) terminal G24-2 & Battery voltage • Check the following component for proper operation: Fuse of the fused jumper wire	Test okay?
	Yes: T14	No: E11
T14	Check: Short to Ground of Voltage Supply Circuit	
	• Remove fused jumper wire • Connect fused jumper wire to: Ignition Switch – Wiring harness connector (wiring harness side) terminal G24-1 & Battery voltage • Check the following component for proper operation: Fuse of the fused jumper wire	Test okay?
	Yes: T15	No: E10
T15	Check: Component	
	• Remove fused jumper wire • Disconnect wiring harness connector from: Starting Motor – Wiring harness connector (wiring harness side) wiring colour C06-1 • Connect fused jumper wire to: Ignition Switch – Wiring harness connector (wiring harness side) terminal G24-3 & Battery voltage • Check the following component for proper operation: Fuse of the fused jumper wire	Test okay?
	Yes: E08	No: E09
T16	Check: Component	
	• Connect fused jumper wire to: Circuit Fuse – Output contact & Battery voltage • Check the following component for proper operation: Fuse of the fused jumper wire	Test okay?
	Yes: E01	No: T17

Test	Work Order Description	Nominal Value
T17	Check: Short to Ground of Voltage Supply Circuit	
	• Disconnect wiring harness connector from: Glow Controller • Insert new fuse into the socket of the fused jumper wire and then check this fuse for proper operation. • Disconnect each of the following components/control units from the wiring harness consecutively and check the fuse of the fused jumper wire for proper operation each time: – ECM – Immobilizer Control Module – Clutch Switch – MAF and IAT Sensor – Fuel Heating Relay – Compressor Relay – Fuel Pump Relay	Test okay?
	Yes: E14	No: E15
T18	Check: Short to Ground/Interruption of Voltage Supply Circuit	
	• Remove electrical component from socket: Circuit Fuse • Check the following component for proper operation: Circuit Fuse	Test okay?
	Yes: T19	No: T25
T19	Check: Interruption of Voltage Supply Circuit	
	• Measure voltage between the following terminals: Circuit Fuse – Input contact & Ground	greater than 11 V
	Yes: E17	No: T20
T20	Check: Interruption of Voltage Supply Circuit	
	• Remove electrical component from socket: Circuit Main Fuse • Check the following component for proper operation: Circuit Main Fuse	Test okay?
	Yes: T21	No: T24
T21	Check: Interruption of Voltage Supply Circuit	
	• Measure voltage between the following terminals: Circuit Main Fuse – Input contact & Ground	greater than 11 V
	Yes: E18	No: T22
T22	Check: Component	
	• Remove electrical component from socket: System Main Fuse • Check the following component for proper operation: System Main Fuse	Test okay?
	Yes: T23	No: E21

Test	Work Order Description	Nominal Value
T23	Check: Interruption of Voltage Supply Circuit	
	• Measure voltage between the following terminals: System Main Fuse – Input contact & Ground	greater than 11 V
	Yes: E19	No: E20
T24	Check: Short to Ground of Voltage Supply Circuit	
	• Connect fused jumper wire to: Circuit Main Fuse – Output contact & Battery voltage • Check the following component for proper operation: Fuse of the fused jumper wire	Test okay?
	Yes: E18	No: E22
T25	Check: Component	
	• Connect fused jumper wire to: Circuit Fuse – Output contact & Battery voltage • Check the following component for proper operation: Fuse of the fused jumper wire	Test okay?
	Yes: E23	No: T26
T26	Check: Component	
	• Remove electrical component from socket: Radio • Insert new fuse into the socket of the fused jumper wire and then check this fuse for proper operation. • Disconnect each of the following components/control units from the wiring harness consecutively and check the fuse of the fused jumper wire for proper operation each time: – ECM (Wiring Harness Connector G88) – Combination Meter – Interior light – Clock	Test okay?
	Yes: E14	No: E24

Result Table (For RB413D)

Result	Cause Of Fault
E01	• Defective component: ECM **NOTE:** **If ECM is replaced, register vehicle specification into ECM by performing procedure described in "ECM registration" in Section 6E3.**
E02	• Circuit interruption between: Data Link Connector – Wiring harness connector (wiring harness side) terminal G09-4 & Ground
E03	• Circuit interruption between: ECM – Wiring harness connector (wiring harness side) terminal G88-88 & Immobilizer Control Module – Wiring harness connector (wiring harness side) terminal G17-7
E04	• Circuit interruption between: Circuit Fuse – Output contact & ECM – Wiring harness connector (wiring harness side) terminal G88-23
E05	• Circuit interruption between: Ignition Switch – Wiring harness connector (wiring harness side) terminal G24-2 & Circuit Fuse – Input contact or • Defective component: Ignition Switch
E06	• Circuit interruption between: Circuit Main Fuse – Output contact & Ignition Switch – Wiring harness connector (wiring harness side) terminal G05-5
E07	• Circuit interruption between: System Main Fuse – Output contact & Circuit Main Fuse – Input contact
E08	• Defective component: Ignition Switch or Starting Motor
E09	• Short circuit to ground between: Ignition Switch – Wiring harness connector (wiring harness side) terminal G24-3 & Starting Motor – Wiring harness connector (wiring harness side) terminal C06-1
E10	• Short circuit to ground between: Ignition Switch – Wiring harness connector (wiring harness side) terminal G24-1 & Circuit Fuses – Input contact

Result	Cause Of Fault
E11	• Short circuit to ground between: Ignition Switch – Wiring harness connector (wiring harness side) terminal G24-2 & Circuit Fuses – Input contact
E12	• Short circuit to ground between: Ignition Switch – Wiring harness connector (wiring harness side) terminal G24-4 & Circuit Fuses – Input contact
E13	• Short circuit to ground between: Circuit Main Fuse – Output contact & Ignition Switch – Wiring harness connector (wiring harness side) terminal G24-5
E14	• If the nominal value is reached during one of the measurements, the component/control unit that has been disconnected immediately before that measurement is defective. **NOTE:** **If ECM is replaced, register vehicle specification into ECM by performing procedure described in "ECM registration" in Section 6E3.**
E15	• Short circuit to ground between: Circuit Fuse – Output contact & ECM – Wiring harness connector (wiring harness side) terminal G88-23 & Wiring harness connector terminals of all components (wiring harness side), which were disconnected from the wiring harness during this trouble shooting session
E16	• Circuit interruption between: Circuit Fuse – Output contact & ECM – Wiring harness connector (wiring harness side) terminal G88-50
E17	• Circuit interruption between: Circuit Fuse – Output contact & Data Link Connector – Wiring harness connector (wiring harness side) terminal G09-16
E18	• Circuit interruption between: Circuit Main Fuse – Output contact & Circuit Fuse – Input contact
E19	• Circuit interruption between: System Main Fuse – Output contact & Circuit Main Fuse – Input contact
E20	• Circuit interruption between: Battery – Positive (+) terminal & System Main Fuse – Input contact or • Defective component: Battery

Result	Cause Of Fault
E21	• Short circuit to ground between: System Main Fuse – Output contact & Generator – Wiring harness connector (wiring harness side) terminal C08-1 & Circuit Main Fuses – Input contact or • Defective component: Generator
E22	• Short circuit to ground between: Circuit Main Fuse – Output contact & Circuit Fuses – Input contact
E23	• Defective component: Scan Tool
E24	• Short circuit to ground between: Circuit Fuse – Output contact & ECM – Wiring harness connector (wiring harness side) terminal G88-50 & Radio – Wiring harness connector (wiring harness side) terminal G64-4 & Clock – Wiring harness connector (wiring harness side) terminal G29-1 & Combination Meter – Wiring harness connector (wiring harness side) terminal G25-32 & Data Link Connector – Wiring harness connector (wiring harness side) terminal G09-16 & Interior Light – Wiring harness connector (Wiring harness side) terminal K02-2 & Interior Light – Wiring harness connector (Wiring harness side) terminal K06-1 or • Defective component: ECM **NOTE:** **If ECM is replaced, register vehicle specification into ECM by performing procedure described in “ECM registration” in Section 6E3.**

C-02, Control Unit Hard- and Software

Test Table

Test	Work Order Description	Nominal Value
T01	Result: High Transition Resistance	
	• Check the following circuit for proper operation: Ground connection of the control unit case	Test okay?
	Yes: T02	No: E03
T02	Check: Programming	
	• Ignition ON • Repeat programming	Programming okay?
	Yes: E01	No: E02

Result table

Result	Cause Of Fault
E01	• Previous programming was faulty
E02	• Defective component: ECM **NOTE:** **If ECM is replaced, register vehicle specification into ECM by performing procedure described in "ECM registration" in Section 6E3.**
E03	• Following system/component is faulty: Ground connection of the control unit case

C-03, System Voltage Circuit

Test Table (For RM413D)

Test	Work Order Description	Nominal Value
T01	Check: Short to Ground/Interruption of Voltage Supply Circuit	13 ... 15 V
	• Engine running • Increase engine speed to 3000 rpm • Measure voltage between the following terminals: Battery – Positive (+) terminal & Ground	
	Yes: T02	No: E05
T02	Check: Short to Ground/Interruption of Voltage Supply Circuit	greater than 11 V
	• Ignition OFF • Measure voltage between the following terminals: Battery – Positive (+) terminal & Ground	
	Yes: T03	No: E04
T03	Check Short to Ground/Interruption of Voltage Supply Circuit	greater than 11 V
	• Disconnect wiring harness connector from: ECM • Measure voltage between the following terminals: ECM – Wiring harness connector (wiring harness side) terminal E27-50 & Ground	
	Yes: T04	No: E06
T04	Check: Transition Resistance of Voltage Supply Circuit	greater than 11 V
	• All consumers turned off • Disconnect wiring harness connector from: ECM • Ignition ON • Connect test lamp (10 W) and multimeter in parallel and measure voltage between the following terminals: ECM – Wiring harness connector (wiring harness side) terminal E27-50 & Ground	
	Yes: T04	No: E03
T05	Check: Transition Resistance of Voltage Supply Circuit	greater than 11 V
	• Connect test lamp (10 W) and multimeter in parallel and measure voltage between the following terminals: Battery Positive (+) terminal & ECM – Wiring harness connector (wiring harness side) terminal E27-1, E27-2, E27-3	
	Yes: E01	No: E02

Result Table (For RM413D)

Result	Cause Of Fault
E01	• Defective component: ECM **NOTE:** **If ECM is replaced, register vehicle specification into ECM by performing procedure described in "ECM registration" in Section 6E3.**
E02	• High transition resistance between: Ground & ECM – Wiring harness connector (wiring harness side) terminal E27-1, E27-2, E27-3
E03	• High transition resistance between: Battery – Positive (+) terminal & ECM – Wiring harness connector (wiring harness side) terminal E27-50
E04	• Check the following component for proper operation: Battery and/or Generator and/or Starting Motor and/or • Check the following circuit for proper operation: Terminal C47-1, C59-1 and system main fuse
E05	• Defective component: Generator
E06	• Short circuit to ground between: Circuit Fuse – Output contact & ECM – Wiring harness connector (wiring harness side) terminal E27-50 & Brake Light Switch – Wiring harness connector (wiring harness side) terminal E36-1, E36-4 • Circuit interruption between: Circuit Fuse – Output contact & ECM – Wiring harness connector (wiring harness side) terminal E27-50 or Defective component: Brake Light Switch

Test Table (For RB413D)

Test	Work Order Description	Nominal Value
T01	Check: Short to Ground/Interruption of Voltage Supply Circuit	13 ... 15 V
	• Engine running • Increase engine speed to 3000 rpm • Measure voltage between the following terminals: Battery – Positive (+) terminal & Ground	
	Yes: T02	No: E05
T02	Check: Short to Ground/Interruption of Voltage Supply Circuit	greater than 11 V
	• Ignition OFF • Measure voltage between the following terminals: Battery – Positive (+) terminal & Ground	
	Yes: T03	No: E04
T03	Check: Transition Resistance of Voltage Supply Circuit	greater than 11 V
	• All consumers turned off • Disconnect wiring harness connector from: ECM • Ignition ON • Connect test lamp (10 W) and multimeter in parallel and measure voltage between the following terminals: ECM – Wiring harness connector (wiring harness side) terminal G88-50 & Ground	
	Yes: T04	No: E03
T04	Check: Transition Resistance of Voltage Supply Circuit	greater than 11 V
	• Connect test lamp (10 W) and multimeter in parallel and measure voltage between the following terminals: Battery Positive (+) terminal & ECM – Wiring harness connector (wiring harness side) terminal G88-1, G88-2, G88-3	
	Yes: E01	No: E02

Result Table (For RB413D)

Result	Cause Of Fault
E01	• Defective component: ECM **NOTE:** **If ECM is replaced, register vehicle specification into ECM by performing procedure described in "ECM registration" in Section 6E3.**
E02	• High transition resistance between: Ground & ECM – Wiring harness connector (wiring harness side) terminal G88-1, G88-2, G88-3
E03	• High transition resistance between: Battery – Positive (+) terminal & ECM – Wiring harness connector (wiring harness side) terminal E27-50
E04	• Check the following component for proper operation: Battery and/or Generator and/or Starting Motor and/or • Check the following circuit for proper operation: Terminal C02-1, C08-1 and system main fuse
E05	• Defective component: Generator

C-04, Control Unit Main Relay Circuit

Test Table (For RM413D)

Test	Work Order Description	Nominal Value
T01	Check: Short to Ground/Interruption of Voltage Supply Circuit	
	• Ignition OFF • Remove electrical component from socket: Main Relay • Measure voltage between the following terminals: Main Relay – Socket Terminal E58-2 & Ground	greater than 11 V
	Yes: T02	No: T12
T02	Check: Interruption of Voltage Supply Circuit	
	• Measure voltage between the following terminals: Main Relay – Socket Terminal E58-1 & Ground	greater than 11 V
	Yes: T03	No: E10
T03	Check: Short to Voltage of Voltage Supply Circuit	
	• Disconnect wiring harness connector from: ECM • Ignition ON • Measure voltage between the following terminals: Main Relay – Socket Terminal E58-4 & Ground	less than 0.3 V
	Yes: T04	No: T11
T04	Check: Short to Voltage of Signal Circuit	
	• Measure voltage between the following terminals: Main Relay – Socket Terminal E58-3 & Ground	less than 0.3 V
	Yes: T05	No: E07
T05	Check: Interruption of Voltage Supply Circuit	
	• Ignition OFF • Connect fused jumper wire to: Main Relay – Socket Terminal E58-4 & Battery positive (+) terminal • Measure voltage between the following terminals: ECM – Wiring harness connector (wiring harness side) terminal E27-6 & Ground	greater than 11 V
	Yes: T06	No: E06

Test	Work Order Description	Nominal Value
T06	Check: Interruption of Voltage Supply Circuit	
	• Measure voltage between the following terminals: ECM – Wiring harness connector (wiring harness side) terminal E27-4 & Ground	greater than 11 V
	Yes: T07	No: E05
T07	Check: Interruption of Voltage Supply Circuit	
	• Measure voltage between the following terminals: ECM – Wiring harness connector (wiring harness side) terminal E27-5 & Ground	greater than 11 V
	Yes: T08	No: T19
T08	Check: Interruption of Voltage Supply Circuit	
	• Measure voltage between the following terminals: ECM – Wiring harness connector (wiring harness side) terminal C66-5 & Ground	greater than 11 V
	Yes: T09	No: E04
T09	Check: Component	
	• Remove fused jumper wire • Insert electrical component in socket: Main Relay • Measure voltage between the following terminals: ECM – Wiring harness connector (wiring harness side) terminal E27-80 & Ground	greater than 11 V
	Yes: T10	No: E03
T10	Check: Component	
	• Connect fused jumper wire to: ECM – Wiring harness connector (wiring harness side) terminal E27-80 & Ground • Measure voltage between the following terminals: ECM – Wiring harness connector (wiring harness side) terminal E27-5 & Ground	greater than 11 V
	Yes: E01	No: E02
T11	Check: Short to Voltage of Voltage Supply Circuit	
	• Remove electrical component from socket: Circuit Fuse • Measure voltage between the following terminals: Main Relay – Socket Terminal E58-4 & Ground	less than 0.3 V
	Yes: E08	No: E09

Test	Work Order Description	Nominal Value
T12	Check: Short to Ground/Interruption of Voltage Supply Circuit	
	• Remove electrical component from socket: Circuit Main Fuse • Check the following component for proper operation: Circuit Main Fuse	Test okay?
	Yes: T12	No: T14
T13	Check: Interruption of Voltage Supply Circuit	
	• Measure voltage between the following terminals: Circuit Main Fuse – Input contact & Ground	greater than 11 V
	Yes: E11	No: T13
T14	Check: Short to Ground/Interruption of Voltage Supply Circuit	
	• Remove electrical component from socket: System Main Fuse • Check the following component for proper operation: System Main Fuse	Test okay?
	Yes: E12	No: E13
T15	Check: Short to Ground of Voltage Supply Circuit	
	• Connect fused jumper wire to: Circuit Main Fuse – Output contact & Battery voltage • Check the following component for proper operation: Fuse of the fused jumper wire	Test okay?
	Yes: T15	No: T17
T16	Check: Short to Ground of Voltage Supply Circuit	
	• Remove fused jumper wire • Connect fused jumper wire to: Main Relay – Socket Terminal E58-3 & Battery voltage • Check the following component for proper operation: Fuse of the fused jumper wire	Test okay?
	Yes: E02	No: T16
T17	Check: Short to Ground of Voltage Supply Circuit	
	• Disconnect wiring harness connector from: ECM • Insert new fuse into the socket of the fused jumper wire and then check this fuse for proper operation.	Test okay?
	Yes: E01	No: E14
T18	Check: Short to Ground of Voltage Supply Circuit	
	• Remove electrical component from socket: Fuel pump relay • Insert new fuse into the socket of the fused jumper wire and then check this fuse for proper operation.	Test okay?
	Yes: E15	No: E16

Test	Work Order Description	Nominal Value
T19	Check: Short to Ground/Interruption of Voltage Supply Circuit	
	• Remove electrical component from socket: Circuit Fuse • Check the following component for proper operation: Circuit Fuse	Test okay?
	Yes: T20	No: T21
T20	Check: Interruption of Voltage Supply Circuit	
	• Measure voltage between the following terminals: Circuit Fuse – Input contact & Ground	greater than 11 V
	Yes: E17	No: E18
T21	Check: Short to Ground of Voltage Supply Circuit	
	• Remove fused jumper wire • Disconnect wiring harness connector from: EGR Valve • Measure resistance between the following terminals: ECM – Wiring harness connector (wiring harness side) terminal E27-5 & Ground	greater than 500 kOhm
	Yes: T22	No: E19
T22	Check: Component	
	• Connect wiring harness connector to: EGR Valve • Connect fused jumper wire to: Circuit Fuse – Output contact & Battery positive (+) terminal • Check the following component for proper operation Fuse of the fused jumper wire	Test okay?
	Yes: E01	No: E20

Result Table (For RM413D)

Result	Cause Of Fault
E01	• Defective component: ECM **NOTE:** **If ECM is replaced, register vehicle specification into ECM by performing procedure described in "ECM registration" in Section 6E3.**
E02	• Defective component: Main Relay
E03	• Short circuit to ground/interruption of circuit between: Main Relay – Socket Terminal E58-3 & ECM – Wiring harness connector (wiring harness side) terminal E27-80 or • Defective component: Main Relay
E04	• Circuit interruption between: Main Relay – Socket Terminal E58-4 & ECM – harness connector (wiring harness side) terminal C66-5
E05	• Circuit interruption between: Main Relay – Socket Terminal E58-4 & ECM – Wiring harness connector (wiring harness side) terminal E27-4
E06	• Circuit interruption between: Main Relay – Socket Terminal E58-4 & ECM – Wiring harness connector (wiring harness side) terminal E27-6
E07	• Short circuit to voltage between: Main Relay – Socket Terminal E58-3 & ECM – Wiring harness connector (wiring harness side) terminal E27-80
E08	• Short circuit to voltage between: Circuit Fuse – Output contact & EGR Valve – Wiring harness connector (wiring harness side) terminal C70-1 & ECM – Wiring harness connector (wiring harness side) terminal E27-5, C66-5 or • Defective component: EGR Valve
E09	• Short circuit to voltage between: Circuit Fuse – Input contact & ECM – Wiring harness connector (wiring harness side) terminal E27-4, E27-6
E10	• Circuit interruption between: Circuit Main Fuse – Output contact & Main Relay – Socket Terminal E58-1

Result	Cause Of Fault
E11	• Circuit interruption between: Circuit Main Fuse – Output contact & Main Relay – Socket Terminal E58-2
E12	• Defective component: Battery or • Circuit interruption between: Battery – Positive (+) terminal & System Main Fuse – Input contact
E13	• Defective component: Alternator or • Short circuit to ground between: System Main Fuse – Output contact & Alternator – Wiring harness connector (wiring harness side) terminal C47-1 & Circuit Main Fuses – Input contact
E14	• Short circuit to ground between: Main Relay – Socket Terminal E58-3 & ECM – Wiring harness connector (wiring harness side) terminal E27-80
E15	• Short circuit to ground between: Fuel Pump Relay – Socket terminal C53-4 & Fuel Pump and Gauge Unit – Wiring harness connector (Wiring harness side) terminal L71-3 or Defective component: Fuel Pump
E16	• Short circuit to ground between: Circuit Main Fuse – Output contact & Fuel Pump Relay – Socket terminal C53-3
E17	• Circuit interruption between: Main Relay – Socket terminal E58-4 & Circuit Fuse – Input contact
E18	• Circuit interruption between Circuit Fuse – Output contact & ECM – Wiring harness connector (wiring harness side) terminal E27-5
E19	• Short circuit to ground between: Circuit Fuse – Output contact & ECM – Wiring harness connector (wiring harness side) terminal E27-5, C66-5
E20	• Defective component: EGR Valve

Test Table (For RB413D)

Test	Work Order Description	Nominal Value
T01	Check: Short to Ground/Interruption of Voltage Supply Circuit	
	• Ignition OFF • Remove electrical component from socket: Main Relay • Measure voltage between the following terminals: Main Relay – Socket Terminal E75-2 & Ground	greater than 11 V
	Yes: T02	No: T12
T02	Check: Interruption of Voltage Supply Circuit	
	• Measure voltage between the following terminals: Main Relay – Socket Terminal E75-1 & Ground	greater than 11 V
	Yes: T03	No: E10
T03	Check: Short to Voltage of Voltage Supply Circuit	
	• Disconnect wiring harness connector from: ECM • Ignition ON • Measure voltage between the following terminals: Main Relay – Socket Terminal E75-4 & Ground	less than 0.3 V
	Yes: T04	No: T11
T04	Check: Short to Voltage of Signal Circuit	
	• Measure voltage between the following terminals: Main Relay – Socket Terminal E75-3 & Ground	less than 0.3 V
	Yes: T05	No: E07
T05	Check: Interruption of Voltage Supply Circuit	
	• Ignition OFF • Connect fused jumper wire to: Main Relay – Socket Terminal E75-4 & Battery positive (+) terminal • Measure voltage between the following terminals: ECM – Wiring harness connector (wiring harness side) terminal G88-6 & Ground	greater than 11 V
	Yes: T06	No: E06
T06	Check: Interruption of Voltage Supply Circuit	
	• Measure voltage between the following terminals: ECM – Wiring harness connector (wiring harness side) terminal G88-4 & Ground	greater than 11 V
	Yes: T07	No: E05

Test	Work Order Description	Nominal Value
T07	Check: Interruption of Voltage Supply Circuit	
	• Measure voltage between the following terminals: ECM – Wiring harness connector (wiring harness side) terminal G88-5 & Ground	greater than 11 V
	Yes: T08	No: T19
T08	Check: Interruption of Voltage Supply Circuit	
	• Measure voltage between the following terminals: ECM – Wiring harness connector (wiring harness side) terminal D26-5 & Ground	greater than 11 V
	Yes: T09	No: E04
T09	Check: Component	
	• Remove fused jumper wire • Insert electrical component in socket: Main Relay • Measure voltage between the following terminals: ECM – Wiring harness connector (wiring harness side) terminal G88-80 & Ground	greater than 11 V
	Yes: T10	No: E03
T10	Check: Component	
	• Connect fused jumper wire to: ECM – Wiring harness connector (wiring harness side) terminal G88-80 & Ground • Measure voltage between the following terminals: ECM – Wiring harness connector (wiring harness side) terminal G88-5 & Ground	greater than 11 V
	Yes: E01	No: E02
T11	Check: Short to Voltage of Voltage Supply Circuit	
	• Remove electrical component from socket: Circuit Fuse • Measure voltage between the following terminals: Main Relay – Socket Terminal E75-4 & Ground	less than 0.3 V
	Yes: E08	No: E09
T12	Check: Short to Ground/Interruption of Voltage Supply Circuit	
	• Remove electrical component from socket: Circuit Main Fuse • Check the following component for proper operation: Circuit Main Fuse	Test okay?
	Yes: T13	No: T15

Test	Work Order Description	Nominal Value
T13	Check: Interruption of Voltage Supply Circuit	
	• Measure voltage between the following terminals: Circuit Main Fuse – Input contact & Ground	greater than 11 V
	Yes: E11	No: T14
T14	Check: Short to Ground/Interruption of Voltage Supply Circuit	
	• Remove electrical component from socket: System Main Fuse • Check the following component for proper operation: System Main Fuse	Test okay?
	Yes: E12	No: E13
T15	Check: Short to Ground of Voltage Supply Circuit	
	• Connect fused jumper wire to: Circuit Main Fuse – Output contact & Battery voltage • Check the following component for proper operation: Fuse of the fused jumper wire	Test okay?
	Yes: T16	No: T18
T16	Check: Short to Ground of Voltage Supply Circuit	
	• Remove fused jumper wire • Connect fused jumper wire to: Main Relay – Socket Terminal E75-3 & Battery voltage • Check the following component for proper operation: Fuse of the fused jumper wire	Test okay?
	Yes: E02	No: T17
T17	Check: Short to Ground of Voltage Supply Circuit	
	• Disconnect wiring harness connector from: ECM • Insert new fuse into the socket of the fused jumper wire and then check this fuse for proper operation.	Test okay?
	Yes: E01	No: E14
T18	Check: Short to Ground of Voltage Supply Circuit	
	• Remove electrical component from socket: Fuel pump relay • Insert new fuse into the socket of the fused jumper wire and then check this fuse for proper operation.	Test okay?
	Yes: E15	No: E16
T19	Check: Short to Ground/Interruption of Voltage Supply Circuit	
	• Remove electrical component from socket: Circuit Fuse • Check the following component for proper operation: Circuit Fuse	Test okay?
	Yes: T20	No: T21

Test	Work Order Description	Nominal Value
T20	Check: Interruption of Voltage Supply Circuit	
	• Measure voltage between the following terminals: Circuit Fuse – Input contact & Ground	greater than 11 V
	Yes: E17	No: E18
T21	Check: Short to Ground of Voltage Supply Circuit	
	• Remove fused jumper wire • Disconnect wiring harness connector from: EGR Valve • Measure resistance between the following terminals: ECM – Wiring harness connector (wiring harness side) terminal G88-5 & Ground	greater than 500 kOhm
	Yes: T22	No: E19
T22	Check: Component	
	• Connect wiring harness connector to: EGR Valve • Connect fused jumper wire to: Circuit Fuse – Output contact & Battery positive (+) terminal • Check the following component for proper operation Fuse of the fused jumper wire	Test okay?
	Yes: E01	No: E20

Result Table (For RB413D)

Result	Cause Of Fault
E01	• Defective component: ECM **NOTE:** **If ECM is replaced, register vehicle specification into ECM by performing procedure described in "ECM registration" in Section 6E3.**
E02	• Defective component: Main Relay
E03	• Short circuit to ground/interruption of circuit between: Main Relay – Socket Terminal E75-3 & ECM – Wiring harness connector (wiring harness side) terminal G88-80 or • Defective component: Main Relay
E04	• Circuit interruption between: Main Relay – Socket Terminal E75-4 & ECM – harness connector (wiring harness side) terminal D26-5
E05	• Circuit interruption between: Main Relay – Socket Terminal E75-4 & ECM – Wiring harness connector (wiring harness side) terminal G88-4
E06	• Circuit interruption between: Main Relay – Socket Terminal E75-4 & ECM – Wiring harness connector (wiring harness side) terminal G88-6
E07	• Short circuit to voltage between: Main Relay – Socket Terminal E75-3 & ECM – Wiring harness connector (wiring harness side) terminal G88-80
E08	• Short circuit to voltage between: Circuit Fuse – Output contact & EGR Valve – Wiring harness connector (wiring harness side) terminal D31-6 & ECM – Wiring harness connector (wiring harness side) terminal G88-5, D26-5 or • Defective component: EGR Valve
E09	• Short circuit to voltage between: Circuit Fuse – Input contact & ECM – Wiring harness connector (wiring harness side) terminal G88-4, G88-6
E10	• Circuit interruption between: Circuit Main Fuse – Output contact & Main Relay – Socket Terminal E75-1

Result	Cause Of Fault
E11	• Circuit interruption between: Circuit Main Fuse – Output contact & Main Relay – Socket Terminal E75-2
E12	• Defective component: Battery or • Circuit interruption between: Battery – Positive (+) terminal & System Main Fuse – Input contact
E13	• Defective component: Alternator or • Short circuit to ground between: System Main Fuse – Output contact & Alternator – Wiring harness connector (wiring harness side) terminal C47-1 & Circuit Main Fuses – Input contact
E14	• Short circuit to ground between: Main Relay – Socket Terminal E75-3 & ECM – Wiring harness connector (wiring harness side) terminal G88-80
E15	• Short circuit to ground between: Fuel Pump Relay – Socket terminal E52-3 & Fuel Pump and Gauge Unit – Wiring harness connector (Wiring harness side) terminal R02-3 or Defective component: Fuel Pump
E16	• Short circuit to ground between: Circuit Main Fuse – Output contact & Fuel Pump Relay – Socket terminal E52-4
E17	• Circuit interruption between: Main Relay – Socket terminal E75-4 & Circuit Fuse – Input contact
E18	• Circuit interruption between Circuit Fuse – Output contact & ECM – Wiring harness connector (wiring harness side) terminal G88-5
E19	• Short circuit to ground between: Circuit Fuse – Output contact & ECM – Wiring harness connector (wiring harness side) terminal G88-5, D26-5
E20	• Defective component: EGR Valve.

C-05, Crankshaft Sensor Circuit

Test Table (For RM413D)

Test	Work Order Description	Nominal Value
T01	Check: Short to Voltage/Ground/Interruption of Signal Circuit	1.2 ... 1.8 V
	• Ignition OFF • Disconnect wiring harness connector from: Crankshaft Position Sensor • Ignition ON • Measure voltage between the following terminals: Crankshaft Position Sensor – Wiring harness connector (wiring harness side) terminal C78-1 & Ground	
	Yes: T02	No: E05
T02	Check: Interruption of Voltage Supply Circuit	2.2 ... 2.8 V
	• Measure voltage between the following terminals: Crankshaft Position Sensor – Wiring harness connector (wiring harness side) terminal C78-2 & Ground	
	Yes: T03	No: E04
T03	Check: Adjustment	Test okay?
	• Check the following system for proper operation: Crankshaft Position Sensor (intermittent problems, missing teeth, wrong reference point, incorrect gap position, etc.)	
	Yes: T04	No: E03
T04	Check: Component	greater than 0.2 V Alternating-current voltage
	• Connect wiring harness connector to: Crankshaft Position Sensor • Disconnect wiring harness connector from: ECM • Switch multimeter to alternating-current voltage measurement. • Measure voltage between the following terminals: ECM – Wiring harness connector (wiring harness side) terminal C66-43 & ECM – Wiring harness connector (wiring harness side) terminal C66-59 • Engine cranking	
	Yes: E01	No: E02

Result Table (For RM413D)

Result	Cause Of Fault
E01	• Defective component: ECM **NOTE:** **If ECM is replaced, register vehicle specification into ECM by performing procedure described in "ECM registration" in Section 6E3.**
E02	• Defective component: Crankshaft Position Sensor
E03	• Refer to "Crankshaft position (CKP) sensor (engine speed sensor) inspection" in Section 6E3.
E04	• Short to voltage/ground/interruption of circuit between: Crankshaft Position Sensor – Wiring harness connector (wiring harness side) terminal C78-2 & ECM – Wiring harness connector (wiring harness side) terminal C66-59 or • Defective component: ECM **NOTE:** **If ECM is replaced, register vehicle specification into ECM by performing procedure described in "ECM registration" in Section 6E3.**
E05	• Short to voltage/ground/interruption of circuit between: Crankshaft Position Sensor – Wiring harness connector (wiring harness side) terminal C78-1 & ECM – Wiring harness connector (wiring harness side) terminal C66-43 or • Defective component: ECM **NOTE:** **If ECM is replaced, register vehicle specification into ECM by performing procedure described in "ECM registration" in Section 6E3.**

Test Table (For RB413D)

Test	Work Order Description	Nominal Value
T01	Check: Short to Voltage/Ground/Interruption of Signal Circuit	1.2 ... 1.8 V
	• Ignition OFF • Disconnect wiring harness connector from: Crankshaft Position Sensor • Ignition ON • Measure voltage between the following terminals: Crankshaft Position Sensor – Wiring harness connector (wiring harness side) terminal D45-1 & Ground	
	Yes: T02	No: E05
T02	Check: Interruption of Voltage Supply Circuit	2.2 ... 2.8 V
	• Measure voltage between the following terminals: Crankshaft Position Sensor – Wiring harness connector (wiring harness side) terminal D45-2 & Ground	
	Yes: T03	No: E04
T03	Check: Adjustment	Test okay?
	• Check the following system for proper operation: Crankshaft Position Sensor (intermittent problems, missing teeth, wrong reference point, incorrect gap position, etc.)	
	Yes: T04	No: E03
T04	Check: Component	greater than 0.2 V Alternating-current voltage
	• Connect wiring harness connector to: Crankshaft Position Sensor • Disconnect wiring harness connector from: ECM • Switch multimeter to alternating-current voltage measurement. • Measure voltage between the following terminals: ECM – Wiring harness connector (wiring harness side) terminal D26-43 & ECM – Wiring harness connector (wiring harness side) terminal D26-59 • Engine cranking	
	Yes: E01	No: E02

Result Table (For RB413D)

Result	Cause Of Fault
E01	• Defective component: ECM **NOTE:** **If ECM is replaced, register vehicle specification into ECM by performing procedure described in "ECM registration" in Section 6E3.**
E02	• Defective component: Crankshaft Position Sensor
E03	• Refer to "Crankshaft position (CKP) sensor (engine speed sensor) inspection".
E04	• Short to voltage/ground/interruption of circuit between: Crankshaft Position Sensor – Wiring harness connector (wiring harness side) terminal D45-2 & ECM – Wiring harness connector (wiring harness side) terminal D26-59 or • Defective component: ECM **NOTE:** **If ECM is replaced, register vehicle specification into ECM by performing procedure described in "ECM registration" in Section 6E3.**
E05	• Short to voltage/ground/interruption of circuit between: Crankshaft Position Sensor – Wiring harness connector (wiring harness side) terminal D45-1 & ECM – Wiring harness connector (wiring harness side) terminal D26-43 or • Defective component: ECM **NOTE:** **If ECM is replaced, register vehicle specification into ECM by performing procedure described in "ECM registration" in Section 6E3.**

C-06, Fuel Pump Relay Circuit

Test Table (For RM413D)

Test	Work Order Description	Nominal Value
T01	Check: Interruption of Signal Circuit	
	• Remove electrical component from socket: Fuel Pump Relay • Ignition ON • Measure voltage between the following terminals: Fuel Pump Relay – Socket terminal C53-2 & Ground	greater than 11 V
	Yes: T02	No: E11
T02	Check: Interruption of Voltage Supply Circuit	
	• Measure voltage between the following terminals: Fuel Pump Relay – Socket terminal C53-3 & Ground	greater than 11 V
	Yes: T03	No: E10
T03	Check: Short to Voltage/Ground/Interruption of Signal Circuit	
	• Ignition OFF Disconnect wiring harness connector from: ECM (Wiring Harness Connector E27) • Ignition ON • Measure voltage between the following terminals: ECM – Wiring harness connector (wiring harness side) terminal E27-75 & Ground	less than 0.3 V
	Yes: T04	No: E09
T04	Check: Short to Ground/Interruption of Signal Circuit	
	• Ignition OFF • Measure resistance between the following terminals: ECM – Wiring harness connector (wiring harness side) terminal E27-75 & Ground	greater than 500 kOhm
	Yes: T05	No: E08
T05	Check: Interruption of Signal Circuit	
	• Measure resistance between the following terminals: ECM – Wiring harness connector (wiring harness side) terminal E27-75 & Fuel Pump Relay – Socket C53-1	less than 5 Ohm
	Yes: T06	No: E07
T06	Check: Short to Voltage of Ground Circuit	
	• Ignition ON • Measure voltage between the following terminals: Fuel Pump Relay – Socket terminal C53-4 & Ground	less than 0.3 V
	Yes: T07	No: E06

Test	Work Order Description	Nominal Value
T07	Check: Component	
	• Ignition OFF • Connect fused jumper wire to: Fuel Pump Relay – Socket terminal C53-3 & Fuel Pump Relay – Socket terminal C53-4	Is the fuel pump running?
	Yes: T08	No: T09
T08	Check: Component	
	• Insert electrical component in socket: Fuel Pump Relay • Ignition ON • Connect fused jumper wire to: ECM – Wiring harness connector (wiring harness side) terminal E27-75 & Ground	Is the fuel pump running?
	Yes: E01	No: E02
T09	Check: Interruption of Signal Circuit	
	• Disconnect wiring harness connector from: Fuel Pump • Measure voltage between the following terminals: Fuel Pump – Wiring harness connector (wiring harness side) terminal L71-3 & Ground	greater than 11 V
	Yes: T10	No: E05
T10	Check: Circuit Interruption of Ground Circuit	
	• Measure resistance between the following terminals: Fuel Pump – Wiring harness connector (wiring harness side) terminal L71-4 & Ground	less than 5 Ohm
	Yes: E03	No: E04

Result Table (For RM413D)

Result	Cause Of Fault
E01	• Defective component: ECM **NOTE:** **If ECM is replaced, register vehicle specification into ECM by performing procedure described in "ECM registration" in Section 6E3.**
E02	• Defective component: Fuel Pump Relay
E03	• Defective component: Fuel Pump
E04	• Circuit interruption between: Fuel Pump – Wiring harness connector (wiring harness side) terminal L71-4 & Ground
E05	• Circuit interruption between: Fuel pump Relay – Socket terminal C53-4 & Fuel Pump – Wiring harness connector (wiring harness side) terminal L71-3
E06	• Short circuit to voltage between: Fuel Pump Relay – Socket terminal C53-4 & Fuel Pump – Wiring harness connector (wiring harness side) terminal L71-3 or • Defective component: Fuel Pump
E07	• Circuit interruption between: ECM – Wiring harness connector (wiring harness side) terminal E27-75 & Fuel Pump Relay – Socket terminal C53-1
E08	• Short circuit to ground between: ECM – Wiring harness connector (wiring harness side) terminal E27-75 & Fuel Pump Relay – Socket terminal C53-1
E09	• Short circuit to voltage between: ECM – Wiring harness connector (wiring harness side) terminal E27-75 & Fuel Pump Relay – Socket terminal C53-1
E10	• Circuit interruption between: Circuit Main Fuse – Output contact & Fuel Pump Relay – Socket terminal C53-3
E11	• Circuit interruption between: Circuit Fuse – Output contact & Fuel Pump Relay – Socket terminal C53-2

Test Table (For RB413D)

Test	Work Order Description	Nominal Value
T01	Check: Interruption of Signal Circuit	
	• Remove electrical component from socket: Fuel Pump Relay • Ignition ON • Measure voltage between the following terminals: Fuel Pump Relay – Socket terminal E52-2 & Ground	greater than 11 V
	Yes: T02	No: E11
T02	Check: Interruption of Voltage Supply Circuit	
	• Measure voltage between the following terminals: Fuel Pump Relay – Socket terminal E52-4 & Ground	greater than 11 V
	Yes: T03	No: E10
T03	Check: Short to Voltage/Ground/Interruption of Signal Circuit	
	• Ignition OFF Disconnect wiring harness connector from: ECM (Wiring Harness Connector G88) • Ignition ON • Measure voltage between the following terminals: ECM – Wiring harness connector (wiring harness side) terminal G88-75 & Ground	less than 0.3 V
	Yes: T04	No: E09
T04	Check: Short to Ground/Interruption of Signal Circuit	
	• Ignition OFF • Measure resistance between the following terminals: ECM – Wiring harness connector (wiring harness side) terminal G88-75 & Ground	greater than 500 kOhm
	Yes: T05	No: E08
T05	Check: Interruption of Signal Circuit	
	• Measure resistance between the following terminals: ECM – Wiring harness connector (wiring harness side) terminal G88-75 & Fuel Pump Relay – Socket E52-1	less than 5 Ohm
	Yes: T06	No: E07
T06	Check: Short to Voltage of Ground Circuit	
	• Ignition ON • Measure voltage between the following terminals: Fuel Pump Relay – Socket terminal E52-3 & Ground	less than 0.3 V
	Yes: T07	No: E06

Test	Work Order Description	Nominal Value
T07	Check: Component	Is the fuel pump running?
	• Ignition OFF • Connect fused jumper wire to: Fuel Pump Relay – Socket terminal E52-4 & Fuel Pump Relay – Socket terminal E52-3	
	Yes: T08	No: T09
T08	Check: Component	Is the fuel pump running?
	• Insert electrical component in socket: Fuel Pump Relay • Ignition ON • Connect fused jumper wire to: ECM – Wiring harness connector (wiring harness side) terminal G88-75 & Ground	
	Yes: E01	No: E02
T09	Check: Interruption of Signal Circuit	greater than 11 V
	• Disconnect wiring harness connector from: Fuel Pump • Measure voltage between the following terminals: Fuel Pump – Wiring harness connector (wiring harness side) terminal R02-3 & Ground	
	Yes: T10	No: E05
T10	Check: Circuit Interruption of Ground Circuit	less than 5 Ohm
	• Measure resistance between the following terminals: Fuel Pump – Wiring harness connector (wiring harness side) terminal R02-4 & Ground	
	Yes: E03	No: E04

Result Table (For RB413D)

Result	Cause Of Fault
E01	• Defective component: ECM **NOTE:** **If ECM is replaced, register vehicle specification into ECM by performing procedure described in "ECM registration in Section 6E3.**
E02	• Defective component: Fuel Pump Relay
E03	• Defective component: Fuel Pump
E04	• Circuit interruption between: Fuel Pump – Wiring harness connector (wiring harness side) terminal R02-4 & Ground
E05	• Circuit interruption between: Fuel pump Relay – Socket terminal E52-3 & Fuel Pump – Wiring harness connector (wiring harness side) terminal R02-3
E06	• Short circuit to voltage between: Fuel Pump Relay – Socket terminal E52-3 & Fuel Pump – Wiring harness connector (wiring harness side) terminal R02-3 or • Defective component: Fuel Pump
E07	• Circuit interruption between: ECM – Wiring harness connector (wiring harness side) terminal G88-75 & Fuel Pump Relay – Socket terminal E52-1
E08	• Short circuit to ground between: ECM – Wiring harness connector (wiring harness side) terminal G88-75 & Fuel Pump Relay – Socket terminal E52-1
E09	• Short circuit to voltage between: ECM – Wiring harness connector (wiring harness side) terminal G88-75 & Fuel Pump Relay – Socket terminal E52-1
E10	• Circuit interruption between: Circuit Main Fuse – Output contact & Fuel Pump Relay – Socket terminal E52-4
E11	• Circuit interruption between: Circuit Fuse – Output contact & Fuel Pump Relay – Socket terminal E52-2

C-07, 5V Circuit 1

Test Table (For RM413D)

Test	Work Order Description	Nominal Value
T01	Check: Short to Voltage/Ground/Interruption of Voltage Supply	
	• Ignition OFF • Disconnect wiring harness connector from: Boost Pressure Sensor • Ignition ON • Measure voltage between the following terminals: Boost Pressure Sensor – Wiring harness connector (wiring harness side) terminal C48-1 & Ground	4.8 ... 5.2 V
	Yes: T02	No: T03
T02	Check: Short to Voltage/Ground/Interruption of Voltage Supply	
	• Measure voltage between the following terminals: Boost Pressure Sensor – Wiring harness connector (wiring harness side) terminal C48-1 & Boost Pressure Sensor – Wiring harness connector (wiring harness side) terminal C48-2	4.8 ... 5.2 V
	Yes: E01	No: E02
T03	Check: Short to Voltage/Ground/Interruption of Voltage Supply	
	• Ignition OFF • Disconnect wiring harness connector from: Boost Pressure Sensor • Ignition ON • Measure voltage between the following terminals: Boost Pressure Sensor – Wiring harness connector (wiring harness side) terminal C48-1 & Ground	less than 4.8 V
	Yes: T04	No: T05
T04	Check: Short to Ground of Voltage Supply Circuit	
	• Ignition OFF • Disconnect wiring harness connector from: Fuel Pressure Sensor • Ignition ON • Measure voltage between: Boost Pressure Sensor – Wiring harness connector (wiring harness side) terminal C48-1 & Ground	greater than 4.8 V
	Yes: E03	No: E04

Test	Work Order Description	Nominal Value
T05	Check: Short to Voltage of Voltage Supply Circuit	
	• Ignition OFF • Disconnect wiring harness connector from: Fuel Pressure Sensor • Ignition ON • Measure voltage between: Boost Pressure Sensor – Wiring harness connector (wiring harness side) terminal C48-1 & Ground	less than 5.2 V
	Yes: E03	No: E05

Result Table (For RM413D)

Result	Cause Of Fault
E01	• Defective component: Boost Pressure Sensor
E02	• Short circuit to voltage/interruption of circuit between: Boost Pressure Sensor – Wiring harness connector (wiring harness side) terminal C48-2 & ECM – Wiring harness connector (wiring harness side) terminal C66-24 or • Defective component: ECM **NOTE:** **If ECM is replaced, register vehicle specification into ECM by performing procedure described in "ECM registration" in Section 6E3.**
E03	• Defective component: Fuel Pressure Sensor
E04	• Short circuit to ground/interruption of circuit between: Boost Pressure Sensor – Wiring harness connector (wiring harness side) terminal C48-1 & ECM – Wiring harness connector (wiring harness side) terminal C66-23 or Fuel Pressure Sensor – Wiring harness connector (wiring harness side) terminal C40-3 & ECM – Wiring harness connector (wiring harness side) terminal C66-8 or • Defective component: ECM **NOTE:** **If ECM is replaced, register vehicle specification into ECM by performing procedure described in "ECM registration" in Section 6E3.**
E05	• Short circuit to voltage between: Boost Pressure Sensor – Wiring harness connector (wiring harness side) terminal C48-1 & ECM – Wiring harness connector (wiring harness side) terminal C66-23 or Fuel Pressure Sensor – Wiring harness connector (wiring harness side) terminal C40-3 & ECM – Wiring harness connector (wiring harness side) terminal C66-8 or • Defective component: ECM **NOTE:** **If ECM is replaced, register vehicle specification into ECM by performing procedure described in "ECM registration" in Section 6E3.**

Test Table (For RB413D)

Test	Work Order Description	Nominal Value
T01	Check: Short to Voltage/Ground/Interruption of Voltage Supply	
	• Ignition OFF • Disconnect wiring harness connector from: Boost Pressure Sensor • Ignition ON • Measure voltage between the following terminals: Boost Pressure Sensor – Wiring harness connector (wiring harness side) terminal D29-3 & Ground	4.8 ... 5.2 V
	Yes: T02	No: T03
T02	Check: Short to Voltage/Ground/Interruption of Voltage Supply	
	• Measure voltage between the following terminals: Boost Pressure Sensor – Wiring harness connector (wiring harness side) terminal D29-3 & Boost Pressure Sensor – Wiring harness connector (wiring harness side) terminal D29-2	4.8 ... 5.2 V
	Yes: E01	No: E02
T03	Check: Short to Voltage/Ground/Interruption of Voltage Supply	
	• Ignition OFF • Disconnect wiring harness connector from: Boost Pressure Sensor • Ignition ON • Measure voltage between the following terminals: Boost Pressure Sensor – Wiring harness connector (wiring harness side) terminal D29-3 & Ground	less than 4.8 V
	Yes: T04	No: T05
T04	Check: Short to Ground of Voltage Supply Circuit	
	• Ignition OFF • Disconnect wiring harness connector from: Fuel Pressure Sensor • Ignition ON • Measure voltage between: Boost Pressure Sensor – Wiring harness connector (wiring harness side) terminal D29-3 & Ground	greater than 4.8 V
	Yes: E03	No: E04

Test	Work Order Description	Nominal Value
T05	Check: Short to Voltage of Voltage Supply Circuit	
	• Ignition OFF • Disconnect wiring harness connector from: Fuel Pressure Sensor • Ignition ON • Measure voltage between: Boost Pressure Sensor – Wiring harness connector (wiring harness side) terminal D29-3 & Ground	less than 5.2 V
	Yes: E03	No: E05

Result Table (For RB413D)

Result	Cause Of Fault
E01	• Defective component: Boost Pressure Sensor
E02	• Short circuit to voltage/interruption of circuit between: Boost Pressure Sensor – Wiring harness connector (wiring harness side) terminal D29-2 & ECM – Wiring harness connector (wiring harness side) terminal D26-24 or • Defective component: ECM **NOTE:** **If ECM is replaced, register vehicle specification into ECM by performing procedure described in "ECM registration" in Section 6E3.**
E03	• Defective component: Fuel Pressure Sensor
E04	• Short circuit to ground/interruption of circuit between: Boost Pressure Sensor – Wiring harness connector (wiring harness side) terminal D29-3 & ECM – Wiring harness connector (wiring harness side) terminal D26-23 or Fuel Pressure Sensor – Wiring harness connector (wiring harness side) terminal D28-1 & ECM – Wiring harness connector (wiring harness side) terminal D26-8 or • Defective component: ECM **NOTE:** **If ECM is replaced, register vehicle specification into ECM by performing procedure described in "ECM registration" in Section 6E3.**
E05	• Short circuit to voltage between: Boost Pressure Sensor – Wiring harness connector (wiring harness side) terminal D29-3 & ECM – Wiring harness connector (wiring harness side) terminal D26-23 or Fuel Pressure Sensor – Wiring harness connector (wiring harness side) terminal D28-1 & ECM – Wiring harness connector (wiring harness side) terminal D26-8 or • Defective component: ECM **NOTE:** **If ECM is replaced, register vehicle specification into ECM by performing procedure described in "ECM registration" in Section 6E3.**

C-08, 5V Circuit 2

Test Table (For RM413D)

Test	Work Order Description	Nominal Value
T01	Check: Short to Voltage/Interruption of Voltage Supply Circuit	4.8 ... 5.2 V
	• Ignition OFF • Disconnect wiring harness connector from: MAF and IAT Sensor • Ignition ON • Measure voltage between the following terminals: MAF and IAT Sensor – Wiring harness connector (wiring harness side) terminal C79-4 & Ground	
	Yes: E01	No: T02
T02	Check: Short to Voltage/Interruption of Voltage Supply Circuit	less than 4.8 V
	• Ignition OFF • Disconnect wiring harness connector from: MAF and IAT Sensor • Ignition ON • Measure voltage between the following terminals: MAF and IAT Sensor – Wiring harness connector (wiring harness side) terminal C79-4 & Ground	
	Yes: T03	No: T04
T03	Check: Short to Ground/Interruption of Voltage Supply Circuit	4.8 ... 5.2 V
	• Ignition OFF • Disconnect wiring harness connector from: Camshaft Position Sensor • Ignition ON • Measure voltage between the following terminals: MAF and IAT Sensor – Wiring harness connector (wiring harness side) terminal C79-4 & Ground • Disconnect each of the following components/control units consecutively from the wiring harness and repeat the measurement each time: Pedal Position Sensor	
	Yes: E02	No: E03

Test	Work Order Description	Nominal Value
T04	Check: Short to Voltage of Voltage Supply Circuit	
	• Ignition OFF • Disconnect wiring harness connector from: Camshaft Position Sensor • Ignition ON • Measure voltage between the following terminals: MAF and IAT Sensor – Wiring harness connector (wiring harness side) terminal C79-4 & Ground • Disconnect each of the following components/control units consecutively from the wiring harness and repeat the measurement each time: Pedal Position Sensor	4.8 ... 5.2 V
	Yes: E02	No: E04

Result Table (For RM413D)

Result	Cause Of Fault
E01	• Defective component: MAF and IAT Sensor
E02	• If the nominal value is reached during one of the measurements, the component/control unit that has been disconnected immediately before that measurement is defective.
E03	• Short circuit to ground/interruption of circuit between: MAF and IAT Sensor – Wiring harness connector (wiring harness side) terminal C79-4 & ECM – Wiring harness connector (wiring harness side) terminal C66-40 or Camshaft Position Sensor – Wiring harness connector (wiring harness side) terminal C69-3 & ECM – Wiring harness connector (wiring harness side) terminal C66-25 or Pedal Position Sensor – Wiring harness connector (wiring harness side) terminal E25-5 & ECM – Wiring harness connector (wiring harness side) terminal E27-83 or • Defective component: ECM **NOTE:** **If ECM is replaced, register vehicle specification into ECM by performing procedure described in "ECM registration" in Section 6E3.**
E04	• Short circuit to voltage between: MAF and IAT Sensor – Wiring harness connector (wiring harness side) terminal C79-4 & ECM – Wiring harness connector (wiring harness side) terminal C66-40 or Pedal Position Sensor – Wiring harness connector (wiring harness side) terminal E25-5 & ECM – Wiring harness connector (wiring harness side) terminal E27-83 or Camshaft Position Sensor – Wiring harness connector (wiring harness side) terminal C69-3 & ECM – Wiring harness connector (wiring harness side) terminal C66-25 or • Defective component: ECM **NOTE:** **If ECM is replaced, register vehicle specification into ECM by performing procedure described in "ECM registration" in Section 6E3.**

Test Table (For RB413D)

Test	Work Order Description	Nominal Value
T01	Check: Short to Voltage/Interruption of Voltage Supply Circuit	
	• Ignition OFF • Disconnect wiring harness connector from: MAF and IAT Sensor • Ignition ON • Measure voltage between the following terminals: MAF and IAT Sensor – Wiring harness connector (wiring harness side) terminal D42-4 & Ground	4.8 ... 5.2 V
	Yes: E01	No: T02
T02	Check: Short to Voltage/Interruption of Voltage Supply Circuit	
	• Ignition OFF • Disconnect wiring harness connector from: MAF and IAT Sensor • Ignition ON • Measure voltage between the following terminals: MAF and IAT Sensor – Wiring harness connector (wiring harness side) terminal D42-4 & Ground	less than 4.8 V
	Yes: T03	No: T04
T03	Check: Short to Ground/Interruption of Voltage Supply Circuit	
	• Ignition OFF • Disconnect wiring harness connector from: Camshaft Position Sensor • Ignition ON • Measure voltage between the following terminals: MAF and IAT Sensor – Wiring harness connector (wiring harness side) terminal D42-4 & Ground • Disconnect each of the following components/control units consecutively from the wiring harness and repeat the measurement each time: Pedal Position Sensor	4.8 ... 5.2 V
	Yes: E02	No: E03

Test	Work Order Description	Nominal Value
T04	Check: Short to Voltage of Voltage Supply Circuit	
	• Ignition OFF • Disconnect wiring harness connector from: Camshaft Position Sensor • Ignition ON • Measure voltage between the following terminals: MAF and IAT Sensor – Wiring harness connector (wiring harness side) terminal D42-4 & Ground • Disconnect each of the following components/control units consecutively from the wiring harness and repeat the measurement each time: Pedal Position Sensor	4.8 ... 5.2 V
	Yes: E02	No: E04

Result Table (For RB413D)

Result	Cause Of Fault
E01	• Defective component: MAF and IAT Sensor
E02	• If the nominal value is reached during one of the measurements, the component/control unit that has been disconnected immediately before that measurement is defective.
E03	• Short circuit to ground/interruption of circuit between: MAF and IAT Sensor – Wiring harness connector (wiring harness side) terminal D42-4 & ECM – Wiring harness connector (wiring harness side) terminal D26-40 or Camshaft Position Sensor – Wiring harness connector (wiring harness side) terminal D33-1 & ECM – Wiring harness connector (wiring harness side) terminal D26-25 or Pedal Position Sensor – Wiring harness connector (wiring harness side) terminal G82-5 & ECM – Wiring harness connector (wiring harness side) terminal G88-83 or • Defective component: ECM **NOTE:** **If ECM is replaced, register vehicle specification into ECM by performing procedure described in "ECM registration" in Section 6E3.**
E04	• Short circuit to voltage between: MAF and IAT Sensor – Wiring harness connector (wiring harness side) terminal D42-4 & ECM – Wiring harness connector (wiring harness side) terminal D26-40 or Pedal Position Sensor – Wiring harness connector (wiring harness side) terminal G82-5 & ECM – Wiring harness connector (wiring harness side) terminal G88-83 or Camshaft Position Sensor – Wiring harness connector (wiring harness side) terminal D33-1 & ECM – Wiring harness connector (wiring harness side) terminal D26-25 or • Defective component: ECM **NOTE:** **If ECM is replaced, register vehicle specification into ECM by performing procedure described in "ECM registration" in Section 6E3.**

C-09, 5V Circuit 3

Test Table (For RM413D)

Test	Work Order Description	Nominal Value
T01	Check: Short to Voltage/Ground/Interruption of Voltage Supply	
	• Ignition OFF • Disconnect wiring harness connector from: Pedal Position Sensor • Ignition ON • Measure voltage between the following terminals: Pedal Position Sensor – Wiring harness connector (wiring harness side) terminal E25-6 & Ground	4.8 ... 5.2 V
	Yes: T02	No: T03
T02	Check: Short to Voltage/Ground/Interruption of Voltage Supply	
	• Measure voltage between the following terminals: Pedal Position Sensor – Wiring harness connector (wiring harness side) terminal E25-6 & Pedal Position Sensor – Wiring harness connector (wiring harness side) terminal E25-2	4.8 ... 5.2 V
	Yes: E01	No: E02
T03	Check: Short to Voltage/Ground/Interruption of Voltage Supply	
	• Ignition OFF • Disconnect wiring harness connector from: Pedal Position Sensor • Ignition ON • Measure voltage between the following terminals: Pedal Position Sensor – Wiring harness connector (wiring harness side) terminal E25-6 & Ground	less than 4.8 V
	Yes: T04	No: T06
T04	Check: Vehicle Configuration	
	Is the following information correct for the actual vehicle? Air Conditioning	
	Yes: T05	No: E05
T05	Check: Short to Ground of Voltage Supply Circuit	
	• Ignition OFF • Disconnect wiring harness connector from: A/C Pressure Sensor • Ignition ON • Measure voltage between the following terminals: Pedal Position Sensor – Wiring harness connector (wiring harness side) terminal E25-6 & Ground	greater than 4.8 V
	Yes: E03	No: E04

Test	Work Order Description	Nominal Value
T06	Check: Vehicle Configuration	
	Is the following information correct for the actual vehicle? Air Conditioning	
	Yes: T07	No: E08
T07	Check: Short to Voltage of Voltage Supply Circuit	
	• Ignition OFF • Disconnect wiring harness connector from: A/C Pressure Sensor • Ignition ON • Measure voltage between the following terminals: Pedal Position Sensor – Wiring harness connector (wiring harness side) terminal E25-6 & Ground	less than 5.2 V
	Yes: E06	No: E07

Result Table (For RM413D)

Result	Cause Of Fault
E01	• Defective component: Pedal Position Sensor
E02	• Short to voltage/ground/interruption of circuit between: Pedal Position Sensor – Wiring harness connector (wiring harness side) terminal E25-2 & ECM – Wiring harness connector (wiring harness side) terminal E27-32 or • Defective component: ECM **NOTE:** **If ECM is replaced, register vehicle specification into ECM by performing procedure described in "ECM registration" in Section 6E3.**
E03	• Defective component: A/C Pressure Sensor
E04	• Short circuit to ground/interruption of circuit between: Pedal Position Sensor – Wiring harness connector (wiring harness side) terminal E25-6 & ECM – Wiring harness connector (wiring harness side) terminal E27-15 or A/C Pressure Sensor – Wiring harness connector (wiring harness side) terminal E26-1 & ECM – Wiring harness connector (wiring harness side) terminal E27-37 or • Defective component: ECM **NOTE:** **If ECM is replaced, register vehicle specification into ECM by performing procedure described in "ECM registration" in Section 6E3.**
E05	• Short circuit to ground/interruption of circuit between: Pedal Position Sensor – Wiring harness connector (wiring harness side) terminal E25-6 & ECM – Wiring harness connector (wiring harness side) terminal E27-15 or • Defective component: ECM **NOTE:** **If ECM is replaced, register vehicle specification into ECM by performing procedure described in "ECM registration" in Section 6E3.**
E06	• Defective component: A/C Pressure Sensor

Result	Cause Of Fault
E07	• Short circuit to voltage between: Pedal Position Sensor – Wiring harness connector (wiring harness side) terminal E25-6 & ECM – Wiring harness connector (wiring harness side) terminal E27-15 or A/C Pressure Sensor – Wiring harness connector (wiring harness side) terminal E26-1 & ECM – Wiring harness connector (wiring harness side) terminal E27-37 or • Defective component: ECM **NOTE:** **If ECM is replaced, register vehicle specification into ECM by performing procedure described in "ECM registration" in Section 6E3.**
E08	• Short circuit to voltage between: Pedal Position Sensor – Wiring harness connector (wiring harness side) terminal E25-6 & ECM – Wiring harness connector (wiring harness side) terminal E27-15 or • Defective component: ECM **NOTE:** **If ECM is replaced, register vehicle specification into ECM by performing procedure described in "ECM registration" in Section 6E3.**

Test Table (For RB413D)

Test	Work Order Description	Nominal Value
T01	Check: Short to Voltage/Ground/Interruption of Voltage Supply	
	• Ignition OFF • Disconnect wiring harness connector from: Pedal Position Sensor • Ignition ON • Measure voltage between the following terminals: Pedal Position Sensor – Wiring harness connector (wiring harness side) terminal G82-6 & Ground	4.8 ... 5.2 V
	Yes: T02	No: T03
T02	Check: Short to Voltage/Ground/Interruption of Voltage Supply	
	• Measure voltage between the following terminals: Pedal Position Sensor – Wiring harness connector (wiring harness side) terminal G82-6 & Pedal Position Sensor – Wiring harness connector (wiring harness side) terminal G82-2	4.8 ... 5.2 V
	Yes: E01	No: E02
T03	Check: Short to Voltage/Ground/Interruption of Voltage Supply	
	• Ignition OFF • Disconnect wiring harness connector from: Pedal Position Sensor • Ignition ON • Measure voltage between the following terminals: Pedal Position Sensor – Wiring harness connector (wiring harness side) terminal G82-6 & Ground	less than 4.8 V
	Yes: T04	No: T06
T04	Check: Vehicle Configuration	
	Is the following information correct for the actual vehicle? Air Conditioning	
	Yes: T05	No: E05
T05	Check: Short to Ground of Voltage Supply Circuit	
	• Ignition OFF • Disconnect wiring harness connector from: A/C Pressure Sensor • Ignition ON • Measure voltage between the following terminals: Pedal Position Sensor – Wiring harness connector (wiring harness side) terminal G82-6 & Ground	greater than 4.8 V
	Yes: E03	No: E04

Test	Work Order Description	Nominal Value
T06	Check: Vehicle Configuration	
	Is the following information correct for the actual vehicle? Air Conditioning	
	Yes: T07	No: E08
T07	Check: Short to Voltage of Voltage Supply Circuit	
	• Ignition OFF • Disconnect wiring harness connector from: A/C Pressure Sensor • Ignition ON • Measure voltage between the following terminals: Pedal Position Sensor – Wiring harness connector (wiring harness side) terminal G82-6 & Ground	less than 5.2 V
	Yes: E06	No: E07

Result Table (For RB413D)

Result	Cause Of Fault
E01	• Defective component: Pedal Position Sensor
E02	• Short to voltage/ground/interruption of circuit between: Pedal Position Sensor – Wiring harness connector (wiring harness side) terminal G82-2 & ECM – Wiring harness connector (wiring harness side) terminal G88-32 or • Defective component: ECM **NOTE:** **If ECM is replaced, register vehicle specification into ECM by performing procedure described in "ECM registration" in Section 6E3.**
E03	• Defective component: A/C Pressure Sensor
E04	• Short circuit to ground/interruption of circuit between: Pedal Position Sensor – Wiring harness connector (wiring harness side) terminal G82-6 & ECM – Wiring harness connector (wiring harness side) terminal G88-15 or A/C Pressure Sensor – Wiring harness connector (wiring harness side) terminal E66-1 & ECM – Wiring harness connector (wiring harness side) terminal G88-37 or • Defective component: ECM **NOTE:** **If ECM is replaced, register vehicle specification into ECM by performing procedure described in "ECM registration" in Section 6E3.**
E05	• Short circuit to ground/interruption of circuit between: Pedal Position Sensor – Wiring harness connector (wiring harness side) terminal G82-6 & ECM – Wiring harness connector (wiring harness side) terminal G88-15 or • Defective component: ECM **NOTE:** **If ECM is replaced, register vehicle specification into ECM by performing procedure described in "ECM registration" in Section 6E3.**
E06	• Defective component: A/C Pressure Sensor

Result	Cause Of Fault
E07	• Short circuit to voltage between: Pedal Position Sensor – Wiring harness connector (wiring harness side) terminal G82-6 & ECM – Wiring harness connector (wiring harness side) terminal G88-15 or A/C Pressure Sensor – Wiring harness connector (wiring harness side) terminal E66-1 & ECM – Wiring harness connector (wiring harness side) terminal G88-37 or • Defective component: ECM **NOTE:** **If ECM is replaced, register vehicle specification into ECM by performing procedure described in "ECM registration" in Section 6E3.**
E08	• Short circuit to voltage between: Pedal Position Sensor – Wiring harness connector (wiring harness side) terminal G82-6 & ECM – Wiring harness connector (wiring harness side) terminal G88-15 or • Defective component: ECM **NOTE:** **If ECM is replaced, register vehicle specification into ECM by performing procedure described in "ECM registration" in Section 6E3.**

C-10, Pedal Position Sensor Circuit

Test Table (For RM413D)

Test	Work Order Description	Nominal Value
T01	Check: Short to Voltage/Ground/Interruption of Voltage Supply	4.8 ... 5.2 V
	• Ignition OFF • Disconnect wiring harness connector from: Pedal Position Sensor • Ignition ON • Measure voltage between the following terminals: Pedal Position Sensor – Wiring harness connector (wiring harness side) terminal E25-5 & Ground	
	Yes: T02	No: T10
T02	Check: Circuit Interruption of Ground Circuit	greater than 4.8 V
	• Measure voltage between the following terminals: Pedal Position Sensor – Wiring harness connector (wiring harness side) terminal E25-5 & Pedal Position Sensor – Wiring harness connector (wiring harness side) terminal E25-3	
	Yes: T03	No: E09
T03	Check: Short to Voltage/Ground/Interruption of Signal Circuit	4.8 ... 5.2 V
	• Ignition OFF • Connect fused jumper wire to: Pedal Position Sensor – Wiring harness connector (wiring harness side) terminal E25-5 & Pedal Position Sensor – Wiring harness connector (wiring harness side) terminal E25-4 • Ignition ON • Scan Tool Data List Parameter PPS 1 (Pedal Position Sensor)	
	Yes: T04	No: T09
T04	Check: Short to Voltage of Signal Circuit	4.8 ... 5.2 V
	• Measure voltage between the following terminals: Pedal Position Sensor – Wiring harness connector (wiring harness side) terminal E25-6 & Ground	
	Yes: T05	No: T08
T05	Check: Short to Ground/Interruption of Signal Circuit	4.8 ... 5.2 V
	• Measure voltage between the following terminals: Pedal Position Sensor – Wiring harness connector (wiring harness side) terminal E25-6 & Pedal Position Sensor – Wiring harness connector (wiring harness side) terminal E25-2	
	Yes: T06	No: E04

Test	Work Order Description	Nominal Value
T06	Check: Short to Ground of Signal Circuit	
	• Ignition OFF • Connect fused jumper wire to: Pedal Position Sensor – Wiring harness connector (wiring harness side) terminal E25-6 & Pedal Position Sensor – Wiring harness connector (wiring harness side) terminal E25-1 • Ignition ON • Scan Tool Data List Parameter PPS 2 (Pedal Position Sensor)	2.4 ... 2.6 V
	Yes: E01	No: T07
T07	Check: Short to Ground of Signal Circuit	
	• Ignition OFF • Connect fused jumper wire to: Pedal Position Sensor – Wiring harness connector (wiring harness side) terminal E25-6 & Pedal Position Sensor – Wiring harness connector (wiring harness side) terminal E25-1 • Ignition ON • Scan Tool Data List Parameter PPS 2 (Pedal Position Sensor)	greater than 2.6 V
	Yes: E02	No: E03
T08	Check: Short to Voltage of Signal Circuit	
	• Measure voltage between the following terminals: Pedal Position Sensor – Wiring harness connector (wiring harness side) terminal E25-6 & Ground	greater than 5.2 V
	Yes: E05	No: E06
T09	Check: Short to Voltage/Ground/Interruption of Signal Circuit	
	• Ignition OFF • Connect fused jumper wire to: Pedal Position Sensor – Wiring harness connector (wiring harness side) terminal E25-5 & Pedal Position Sensor – Wiring harness connector (wiring harness side) terminal E25-4 • Ignition ON • Scan Tool Data List Parameter PPS 1 (Pedal Position Sensor)	greater than 5.2 V
	Yes: E07	No: E08

Test	Work Order Description	Nominal Value
T10	Check: Short to Voltage/Ground/Interruption of Voltage Supply	
	• Ignition OFF • Disconnect wiring harness connector from: Pedal Position Sensor • Ignition ON • Measure voltage between the following terminals: Pedal Position Sensor – Wiring harness connector (wiring harness side) terminal E25-5 & Ground	greater than 5.2 V
	Yes: E10	No: E11

Result Table (For RM413D)

Result	Cause Of Fault
E01	• Defective component: Pedal Position Sensor
E02	• Short circuit to voltage between: ECM – Wiring harness connector (wiring harness side) terminal E27-41 & Pedal Position Sensor – Wiring harness connector (wiring harness side) terminal E25-1
E03	• Short circuit to ground/interruption of circuit between: ECM – Wiring harness connector (wiring harness side) terminal E27-41 & Pedal Position Sensor – Wiring harness connector (wiring harness side) terminal E25-1 or • Defective component: ECM **NOTE:** **If ECM is replaced, register vehicle specification into ECM by performing procedure described in "ECM registration" in Section 6E3.**
E04	• Short circuit to ground/interruption of circuit between: ECM – Wiring harness connector (wiring harness side) terminal E27-32 & Pedal Position Sensor – Wiring harness connector (wiring harness side) terminal E25-2 or • Defective component: ECM **NOTE:** **If ECM is replaced, register vehicle specification into ECM by performing procedure described in "ECM registration" in Section 6E3.**
E05	• Short circuit to voltage between: ECM – Wiring harness connector (wiring harness side) terminal E27-15 & Pedal Position Sensor – Wiring harness connector (wiring harness side) terminal E25-6
E06	• Short circuit to ground/interruption of circuit between: ECM – Wiring harness connector (wiring harness side) terminal E27-15 & Pedal Position Sensor – Wiring harness connector (wiring harness side) terminal E25-6 or • Defective component: ECM **NOTE:** **If ECM is replaced, register vehicle specification into ECM by performing procedure described in "ECM registration" in Section 6E3.**

Result	Cause Of Fault
E07	• Short circuit to voltage between: ECM – Wiring harness connector (wiring harness side) terminal E27-65 & Pedal Position Sensor – Wiring harness connector (wiring harness side) terminal E25-4 or • Defective component: ECM **NOTE:** **If ECM is replaced, register vehicle specification into ECM by performing procedure described in "ECM registration" in Section 6E3.**
E08	• Circuit interruption between: ECM – Wiring harness connector (wiring harness side) terminal E27-65 & Pedal Position Sensor – Wiring harness connector (wiring harness side) terminal E25-4 or • Defective component: ECM **NOTE:** **If ECM is replaced, register vehicle specification into ECM by performing procedure described in "ECM registration" in Section 6E3.**
E09	• Circuit interruption between: Pedal Position Sensor – Wiring harness connector (wiring harness side) terminal E25-3 & ECM – Wiring harness connector (wiring harness side) terminal E27-35 or • Defective component: ECM **NOTE:** **If ECM is replaced, register vehicle specification into ECM by performing procedure described in "ECM registration" in Section 6E3.**
E10	• Short circuit to voltage between: ECM – Wiring harness connector (wiring harness side) terminal E27-83 & Pedal Position Sensor – Wiring harness connector (wiring harness side) terminal E25-5 or • Defective component: ECM **NOTE:** **If ECM is replaced, register vehicle specification into ECM by performing procedure described in "ECM registration" in Section 6E3.**

Result	Cause Of Fault
E11	• Short circuit to ground/interruption of circuit between: ECM – Wiring harness connector (wiring harness side) terminal E27-83 & Pedal Position Sensor – Wiring harness connector (wiring harness side) terminal E25-5 or • Defective component: ECM **NOTE:** **If ECM is replaced, register vehicle specification into ECM by performing procedure described in "ECM registration" in Section 6E3.**

Test Table (For RB413D)

Test	Work Order Description	Nominal Value
T01	Check: Short to Voltage/Ground/Interruption of Voltage Supply	4.8 ... 5.2 V
	• Ignition OFF • Disconnect wiring harness connector from: Pedal Position Sensor • Ignition ON • Measure voltage between the following terminals: Pedal Position Sensor – Wiring harness connector (wiring harness side) terminal G82-5 & Ground	
	Yes: T02	No: T10
T02	Check: Circuit Interruption of Ground Circuit	greater than 4.8 V
	• Measure voltage between the following terminals: Pedal Position Sensor – Wiring harness connector (wiring harness side) terminal G82-5 & Pedal Position Sensor – Wiring harness connector (wiring harness side) terminal G82-3	
	Yes: T03	No: E09
T03	Check: Short to Voltage/Ground/Interruption of Signal Circuit	4.8 ... 5.2 V
	• Ignition OFF • Connect fused jumper wire to: Pedal Position Sensor – Wiring harness connector (wiring harness side) terminal G82-5 & Pedal Position Sensor – Wiring harness connector (wiring harness side) terminal G82-4 • Ignition ON • Scan Tool Data List Parameter PPS 1 (Pedal Position Sensor)	
	Yes: T04	No: T09
T04	Check: Short to Voltage of Signal Circuit	4.8 ... 5.2 V
	• Measure voltage between the following terminals: Pedal Position Sensor – Wiring harness connector (wiring harness side) terminal G82-6 & Ground	
	Yes: T05	No: T08
T05	Check: Short to Ground/Interruption of Signal Circuit	4.8 ... 5.2 V
	• Measure voltage between the following terminals: Pedal Position Sensor – Wiring harness connector (wiring harness side) terminal G82-6 & Pedal Position Sensor – Wiring harness connector (wiring harness side) terminal G82-2	
	Yes: T06	No: E04

Test	Work Order Description	Nominal Value
T06	Check: Short to Ground of Signal Circuit	
	• Ignition OFF • Connect fused jumper wire to: Pedal Position Sensor – Wiring harness connector (wiring harness side) terminal G82-6 & Pedal Position Sensor – Wiring harness connector (wiring harness side) terminal G82-1 • Ignition ON • Scan Tool Data List Parameter PPS 2 (Pedal Position Sensor)	2.4 ... 2.6 V
	Yes: E01	No: T07
T07	Check: Short to Ground of Signal Circuit	
	• Ignition OFF • Connect fused jumper wire to: Pedal Position Sensor – Wiring harness connector (wiring harness side) terminal G82-6 & Pedal Position Sensor – Wiring harness connector (wiring harness side) terminal G82-1 • Ignition ON • Scan Tool Data List Parameter PPS 2 (Pedal Position Sensor)	greater than 2.6 V
	Yes: E02	No: E03
T08	Check: Short to Voltage of Signal Circuit	
	• Measure voltage between the following terminals: Pedal Position Sensor – Wiring harness connector (wiring harness side) terminal G82-6 & Ground	greater than 5.2 V
	Yes: E05	No: E06
T09	Check: Short to Voltage/Ground/Interruption of Signal Circuit	
	• Ignition OFF • Connect fused jumper wire to: Pedal Position Sensor – Wiring harness connector (wiring harness side) terminal G82-5 & Pedal Position Sensor – Wiring harness connector (wiring harness side) terminal G82-4 • Ignition ON • Scan Tool Data List Parameter PPS 1 (Pedal Position Sensor)	greater than 5.2 V
	Yes: E07	No: E08

Test	Work Order Description	Nominal Value
T10	Check: Short to Voltage/Ground/Interruption of Voltage Supply	
	• Ignition OFF • Disconnect wiring harness connector from: Pedal Position Sensor • Ignition ON • Measure voltage between the following terminals: Pedal Position Sensor – Wiring harness connector (wiring harness side) terminal G82-5 & Ground	greater than 5.2 V
	Yes: E10	No: E11

Result Table (For RB413D)

Result	Cause Of Fault
E01	• Defective component: Pedal Position Sensor
E02	• Short circuit to voltage between: ECM – Wiring harness connector (wiring harness side) terminal G88-41 & Pedal Position Sensor – Wiring harness connector (wiring harness side) terminal G82-1
E03	• Short circuit to ground/interruption of circuit between: ECM – Wiring harness connector (wiring harness side) terminal G88-41 & Pedal Position Sensor – Wiring harness connector (wiring harness side) terminal G82-1 or • Defective component: ECM **NOTE:** **If ECM is replaced, register vehicle specification into ECM by performing procedure described in "ECM registration" in Section 6E3.**
E04	• Short circuit to ground/interruption of circuit between: ECM – Wiring harness connector (wiring harness side) terminal G88-32 & Pedal Position Sensor – Wiring harness connector (wiring harness side) terminal G82-2 or • Defective component: ECM **NOTE:** **If ECM is replaced, register vehicle specification into ECM by performing procedure described in "ECM registration" in Section 6E3.**
E05	• Short circuit to voltage between: ECM – Wiring harness connector (wiring harness side) terminal G88-15 & Pedal Position Sensor – Wiring harness connector (wiring harness side) terminal G82-6
E06	• Short circuit to ground/interruption of circuit between: ECM – Wiring harness connector (wiring harness side) terminal G88-15 & Pedal Position Sensor – Wiring harness connector (wiring harness side) terminal G82-6 or • Defective component: ECM **NOTE:** **If ECM is replaced, register vehicle specification into ECM by performing procedure described in "ECM registration" in Section 6E3.**

Result	Cause Of Fault
E07	• Short circuit to voltage between: ECM – Wiring harness connector (wiring harness side) terminal G88-65 & Pedal Position Sensor – Wiring harness connector (wiring harness side) terminal G82-4 or • Defective component: ECM **NOTE:** **If ECM is replaced, register vehicle specification into ECM by performing procedure described in "ECM registration" in Section 6E3.**
E08	• Circuit interruption between: ECM – Wiring harness connector (wiring harness side) terminal G88-65 & Pedal Position Sensor – Wiring harness connector (wiring harness side) terminal G82-4 or • Defective component: ECM **NOTE:** **If ECM is replaced, register vehicle specification into ECM by performing procedure described in "ECM registration" in Section 6E3.**
E09	• Circuit interruption between: Pedal Position Sensor – Wiring harness connector (wiring harness side) terminal G82-3 & ECM – Wiring harness connector (wiring harness side) terminal G88-35 or • Defective component: ECM **NOTE:** **If ECM is replaced, register vehicle specification into ECM by performing procedure described in "ECM registration" in Section 6E3.**
E10	• Short circuit to voltage between: ECM – Wiring harness connector (wiring harness side) terminal G88-83 & Pedal Position Sensor – Wiring harness connector (wiring harness side) terminal G82-5 or • Defective component: ECM **NOTE:** **If ECM is replaced, register vehicle specification into ECM by performing procedure described in "ECM registration" in Section 6E3.**

Result	Cause Of Fault
E11	• Short circuit to ground/interruption of circuit between: ECM – Wiring harness connector (wiring harness side) terminal G88-83 & Pedal Position Sensor – Wiring harness connector (wiring harness side) terminal G82-5 or • Defective component: ECM **NOTE:** **If ECM is replaced, register vehicle specification into ECM by performing procedure described in "ECM registration" in Section 6E3.**

C11, Barometer Sensor Circuit

Result Table

Result	Cause Of Fault
E01	• Defective component: ECM **NOTE:** **If ECM is replaced, register vehicle specification into ECM by performing procedure described in "ECM registration" in Section 6E3.**

C-12, Boost Pressure Sensor Circuit

Test Table (For RM413D)

Test	Work Order Description	Nominal Value
T01	Check: Circuit Interruption of Ground Circuit	
	• Ignition OFF • Disconnect wiring harness connector from: Boost Pressure Sensor • Ignition ON • Measure voltage between the following terminals: Boost Pressure Sensor – Wiring harness connector (wiring harness side) terminal C48-1 & Boost Pressure Sensor – Wiring harness connector (wiring harness side) terminal C48-2	4.8 ... 5.2 V
	Yes: T02	No: T05
T02	Check: Short to Voltage of Signal Circuit	
	• Ignition OFF • Disconnect wiring harness connector from: ECM (Wiring Harness Connector C66) • Ignition ON • Measure voltage between the following terminals: Boost Pressure Sensor – Wiring harness connector (wiring harness side) terminal C48-3 & Ground	less than 0.3 V
	Yes: T03	No: E04
T03	Check: Interruption of Signal Circuit	
	• Measure resistance between the following terminals: Boost Pressure Sensor – Wiring harness connector (wiring harness side) terminal C48-3 & ECM – Wiring harness connector (wiring harness side) terminal C66-41	less than 5 Ohm
	Yes: T04	No: E03
T04	Check: Short to Ground of Signal Circuit	
	• Measure resistance between the following terminals: Boost Pressure Sensor – Wiring harness connector (wiring harness side) terminal C48-3 & Ground	greater than 500 kOhm
	Yes: E01	No: E02

Test	Work Order Description	Nominal Value
T05	Check: Circuit Interruption of Ground Circuit	
	• Ignition OFF • Disconnect wiring harness connector from: Boost Pressure Sensor • Ignition ON • Measure voltage between the following terminals: Boost Pressure Sensor – Wiring harness connector (wiring harness side) terminal C48-1 & Boost Pressure Sensor – Wiring harness connector (wiring harness side) terminal C48-2	less than 4.8 V
	Yes: E05	No: E06

Result Table (For RM413D)

Result	Cause Of Fault
E01	• Defective component: Boost Pressure Sensor or ECM **NOTE:** **• The replacement of the components must be done in the listed order.** **The system must be checked for proper operation after every replacement.** **• If ECM is replaced, register vehicle specification into ECM by performing procedure described in "ECM registration" in Section 6E3.**
E02	• Short circuit to ground between: Boost Pressure Sensor – Wiring harness connector (wiring harness side) terminal C48-3 & ECM – Wiring harness connector (wiring harness side) terminal C66-41
E03	• Circuit interruption between: Boost Pressure Sensor – Wiring harness connector (wiring harness side) terminal C48-3 & ECM – Wiring harness connector (wiring harness side) terminal C66-41
E04	• Short circuit to voltage between: Boost Pressure Sensor – Wiring harness connector (wiring harness side) terminal C48-3 & ECM – Wiring harness connector (wiring harness side) terminal C66-41 or • Defective component: ECM **NOTE:** **If ECM is replaced, register vehicle specification into ECM by performing procedure described in "ECM registration" in Section 6E3.**
E05	• Circuit interruption between: Boost Pressure Sensor – Wiring harness connector (wiring harness side) terminal C48-2 & ECM – Wiring harness connector (wiring harness side) terminal C66-24 or • Defective component: ECM **NOTE:** **If ECM is replaced, register vehicle specification into ECM by performing procedure described in "ECM registration" in Section 6E3.**
E06	• Short circuit to voltage between: ECM – Wiring harness connector (wiring harness side) terminal C66-24 & Boost Pressure Sensor – Wiring harness connector (wiring harness side) terminal C48-2

Test Table (For RB413D)

Test	Work Order Description	Nominal Value
T01	Check: Circuit Interruption of Ground Circuit	
	• Ignition OFF • Disconnect wiring harness connector from: Boost Pressure Sensor • Ignition ON • Measure voltage between the following terminals: Boost Pressure Sensor – Wiring harness connector (wiring harness side) terminal D29-3 & Boost Pressure Sensor – Wiring harness connector (wiring harness side) terminal D29-2	4.8 ... 5.2 V
	Yes: T02	No: T05
T02	Check: Short to Voltage of Signal Circuit	
	• Ignition OFF • Disconnect wiring harness connector from: ECM (Wiring Harness Connector D26) • Ignition ON • Measure voltage between the following terminals: Boost Pressure Sensor – Wiring harness connector (wiring harness side) terminal D29-1 & Ground	less than 0.3 V
	Yes: T03	No: E04
T03	Check: Interruption of Signal Circuit	
	• Measure resistance between the following terminals: Boost Pressure Sensor – Wiring harness connector (wiring harness side) terminal D29-1 & ECM – Wiring harness connector (wiring harness side) terminal D26-41	less than 5 Ohm
	Yes: T04	No: E03
T04	Check: Short to Ground of Signal Circuit	
	• Measure resistance between the following terminals: Boost Pressure Sensor – Wiring harness connector (wiring harness side) terminal D29-1 & Ground	greater than 500 kOhm
	Yes: E01	No: E02

Test	Work Order Description	Nominal Value
T05	Check: Circuit Interruption of Ground Circuit	
	• Ignition OFF • Disconnect wiring harness connector from: Boost Pressure Sensor • Ignition ON • Measure voltage between: Boost Pressure Sensor – Wiring harness connector (wiring harness side) terminal D29-3 & Boost Pressure Sensor – Wiring harness connector (wiring harness side) terminal D29-2	less than 4.8 V
	Yes: E05	No: E06

Result Table (For RB413D)

Result	Cause Of Fault
E01	• Defective component: Boost Pressure Sensor or ECM **NOTE:** • **The replacement of the components must be done in the listed order. The system must be checked for proper operation after every replacement.** • **If ECM is replaced, register vehicle specification into ECM by performing procedure described in "ECM registration" in Section 6E3.**
E02	• Short circuit to ground between: Boost Pressure Sensor – Wiring harness connector (wiring harness side) terminal D29-1 & ECM – Wiring harness connector (wiring harness side) terminal D26-41
E03	• Circuit interruption between: Boost Pressure Sensor – Wiring harness connector (wiring harness side) terminal D29-1 & ECM – Wiring harness connector (wiring harness side) terminal D26-41
E04	• Short circuit to voltage between: Boost Pressure Sensor – Wiring harness connector (wiring harness side) terminal D29-1 & ECM – Wiring harness connector (wiring harness side) terminal D26-41 or • Defective component: ECM **NOTE:** **If ECM is replaced, register vehicle specification into ECM by performing procedure described in "ECM registration" in Section 6E3.**
E05	• Circuit interruption between: Boost Pressure Sensor – Wiring harness connector (wiring harness side) terminal D29-2 & ECM – Wiring harness connector (wiring harness side) terminal D26-24 or • Defective component: ECM **NOTE:** **If ECM is replaced, register vehicle specification into ECM by performing procedure described in "ECM registration" in Section 6E3.**
E06	• Short circuit to voltage between: ECM – Wiring harness connector (wiring harness side) terminal D26-24 & Boost Pressure Sensor – Wiring harness connector (wiring harness side) terminal D29-2

C-13, Intake Air Temperature Sensor Circuit

Test Table (For RM413D)

Test	Work Order Description	Nominal Value
T01	Check: Short to Voltage/Ground/Interruption of Signal Circuit	
	• Ignition OFF • Disconnect wiring harness connector from: MAF and IAT Sensor • Ignition ON • Measure voltage between the following terminals: MAF and IAT Sensor – Wiring harness connector (wiring harness side) terminal C79-1 & Ground	4.8 ... 5.2 V
	Yes: T02	No: T04
T02	Check: Component	
	• Scan Tool Data List Parameter Intake Air Temperature	greater than 4.8 V
	Yes: T03	No: E03
T03	Check: Circuit Interruption of Ground Circuit	
	• Connect fused jumper wire to: MAF and IAT Sensor – Wiring harness connector (wiring harness side) terminal C79-1 & MAF and IAT Sensor – Wiring harness connector (wiring harness side) terminal C79-3 • Scan Tool Data List Parameter Intake Air Temperature	less than 0.3 V
	Yes: E01	No: E02
T04	Check: Short to Voltage/Ground/Interruption of Signal Circuit	
	• Ignition OFF • Disconnect wiring harness connector from: MAF and IAT Sensor • Ignition ON • Measure voltage between the following terminals: MAF and IAT Sensor – Wiring harness connector (wiring harness side) terminal C79-1 & Ground	greater than 5.2 V
	Yes: E04	No: E05

Result Table (For RM413D)

Result	Cause Of Fault
E01	• Defective component: MAF and IAT Sensor
E02	• Short circuit to voltage/interruption of circuit between: MAF and IAT Sensor – Wiring harness connector (wiring harness side) terminal C79-3 & ECM – Wiring harness connector (wiring harness side) terminal C66-27 or • Defective component: ECM **NOTE:** **If ECM is replaced, register vehicle specification into ECM by performing procedure described in "ECM registration" in Section 6E3.**
E03	• Defective component: ECM **NOTE:** **If ECM is replaced, register vehicle specification into ECM by performing procedure described in "ECM registration" in Section 6E3.**
E04	• Short circuit to voltage between: ECM – Wiring harness connector (wiring harness side) terminal C66-10 & MAF and IAT Sensor – Wiring harness connector (wiring harness side) terminal C79-1 or • Defective component: ECM **NOTE:** **If ECM is replaced, register vehicle specification into ECM by performing procedure described in "ECM registration" in Section 6E3.**
E05	• Short circuit to ground/interruption of circuit between: ECM – Wiring harness connector (wiring harness side) terminal C66-10 & MAF and IAT Sensor – Wiring harness connector (wiring harness side) terminal C79-1 or • Defective component: ECM **NOTE:** **If ECM is replaced, register vehicle specification into ECM by performing procedure described in "ECM registration" in Section 6E3.**

Test Table (For RB413D)

Test	Work Order Description	Nominal Value
T01	Check: Short to Voltage/Ground/Interruption of Signal Circuit	
	• Ignition OFF • Disconnect wiring harness connector from: MAF and IAT Sensor • Ignition ON • Measure voltage between the following terminals: MAF and IAT Sensor – Wiring harness connector (wiring harness side) terminal D42-1 & Ground	4.8 ... 5.2 V
	Yes: T02	No: T04
T02	Check: Component	
	• Scan Tool Data List Parameter Intake Air Temperature	greater than 4.8 V
	Yes: T03	No: E03
T03	Check: Circuit Interruption of Ground Circuit	
	• Connect fused jumper wire to: MAF and IAT Sensor – Wiring harness connector (wiring harness side) terminal D42-1 & MAF and IAT Sensor – Wiring harness connector (wiring harness side) terminal D42-3 • Scan Tool Data List Parameter Intake Air Temperature	less than 0.3 V
	Yes: E01	No: E02
T04	Check: Short to Voltage/Ground/Interruption of Signal Circuit	
	• Ignition OFF • Disconnect wiring harness connector from: MAF and IAT Sensor • Ignition ON • Measure voltage between the following terminals: MAF and IAT Sensor – Wiring harness connector (wiring harness side) terminal D42-1 & Ground	greater than 5.2 V
	Yes: E04	No: E05

Result Table (For RB413D)

Result	Cause Of Fault
E01	• Defective component: MAF and IAT Sensor
E02	• Short circuit to voltage/interruption of circuit between: MAF and IAT Sensor – Wiring harness connector (wiring harness side) terminal D42-3 & ECM – Wiring harness connector (wiring harness side) terminal D26-24 or • Defective component: ECM **NOTE:** **If ECM is replaced, register vehicle specification into ECM by performing procedure described in "ECM registration" in Section 6E3.**
E03	• Defective component: ECM **NOTE:** **If ECM is replaced, register vehicle specification into ECM by performing procedure described in "ECM registration" in Section 6E3.**
E04	• Short circuit to voltage between: ECM – Wiring harness connector (wiring harness side) terminal D26-10 & MAF and IAT Sensor – Wiring harness connector (wiring harness side) terminal D42-1 or • Defective component: ECM **NOTE:** **If ECM is replaced, register vehicle specification into ECM by performing procedure described in "ECM registration" in Section 6E3.**
E05	• Short circuit to ground/interruption of circuit between: ECM – Wiring harness connector (wiring harness side) terminal D26-10 & MAF and IAT Sensor – Wiring harness connector (wiring harness side) terminal D42-1 or • Defective component: ECM **NOTE:** **If ECM is replaced, register vehicle specification into ECM by performing procedure described in "ECM registration" in Section 6E3.**

C-14, Mass or Volume Air Flow Circuit

Test Table (For RM413D)

Test	Work Order Description	Nominal Value
T01	Check: Interruption of Voltage Supply Circuit	
	• Ignition OFF • Disconnect wiring harness connector from: MAF and IAT Sensor • Ignition ON • Measure voltage between the following terminals: MAF and IAT Sensor – Wiring harness connector (wiring harness side) terminal C79-2 & Ground	greater than 11 V
	Yes: T02	No: E08
T02	Check: Short to Voltage/Interruption of Ground Circuit	
	• Measure voltage between the following terminals: MAF and IAT Sensor – Wiring harness connector (wiring harness side) terminal C79-2 & MAF and IAT Sensor – Wiring harness connector (wiring harness side) terminal C79-3	greater than 11 V
	Yes: T03	No: T07
T03	Check: Short to Voltage/Ground/Interruption of Voltage Supply	
	• Measure voltage between the following terminals: MAF and IAT Sensor – Wiring harness connector (wiring harness side) terminal C79-4 & Ground	4.8 ... 5.2 V
	Yes: T04	No: E05
T04	Check: Short to Voltage/Ground/Interruption of Signal Circuit	
	• Ignition OFF • Disconnect wiring harness connector from: ECM (Wiring Harness Connector C66) • Ignition ON • Measure voltage between the following terminals: MAF and IAT Sensor – Wiring harness connector (wiring harness side) terminal C79-5 & Ground	less than 0.3 V
	Yes: T05	No: E04
T05	Check: Short to Ground of Signal Circuit	
	• Measure resistance between the following terminals: MAF and IAT Sensor – Wiring harness connector (wiring harness side) terminal C79-5 & Ground	greater than 500 kOhm
	Yes: T06	No: E03

Test	Work Order Description	Nominal Value
T06	Check: Interruption of Signal Circuit	
	• Measure resistance between the following terminals: MAF and IAT Sensor – Wiring harness connector (wiring harness side) terminal C79-5 & ECM – Wiring harness connector (wiring harness side) terminal C66-14	less than 5 Ohm
	Yes: E01	No: E02
T07	Check: Short to Voltage of Ground Circuit	
	• Measure voltage between the following terminals: MAF and IAT Sensor – Wiring harness connector (wiring harness side) terminal C79-3 & Ground	less than 0.3 V
	Yes: E06	No: E07

Result table (For RM413D)

Result	Cause Of Fault
E01	• Defective component: MAF and IAT Sensor or ECM **NOTE:** • **The replacement of the components must be done in the listed order. The system must be checked for proper operation after every replacement.** • **If ECM is replaced, register vehicle specification into ECM by performing procedure described in "ECM registration" in Section 6E3.**
E02	• Circuit interruption between: ECM – Wiring harness connector (wiring harness side) terminal C66-14 & MAF and IAT Sensor – Wiring harness connector (wiring harness side) terminal C79-5
E03	• Short circuit to ground between: ECM – Wiring harness connector (wiring harness side) terminal C66-14 & MAF and IAT Sensor – Wiring harness connector (wiring harness side) terminal C79-5
E04	• Short circuit to voltage between: ECM – Wiring harness connector (wiring harness side) terminal C66-14 & MAF and IAT Sensor – Wiring harness connector (wiring harness side) terminal C79-5
E05	• Circuit interruption between: ECM – Wiring harness connector (wiring harness side) terminal C66-40 & MAF and IAT Sensor – Wiring harness connector (wiring harness side) terminal C79-4
E06	• Circuit interruption between: MAF and IAT Sensor – Wiring harness connector (wiring harness side) terminal C79-3 & ECM – Wiring harness connector (wiring harness side) terminal C66-27 or • Defective component: ECM **NOTE:** **If ECM is replaced, register vehicle specification into ECM by performing procedure described in "ECM registration" in Section 6E3.**
E07	• Short circuit to voltage between: ECM – Wiring harness connector (wiring harness side) terminal C66-27 & MAF and IAT Sensor – Wiring harness connector (wiring harness side) terminal C79-3 or • Defective component: ECM **NOTE:** **If ECM is replaced, register vehicle specification into ECM by performing procedure described in "ECM registration" in Section 6E3.**

Result	Cause Of Fault
E08	• Circuit interruption between: Circuit Fuse – Output contact & MAF and IAT Sensor – Wiring harness connector (wiring harness side) terminal C79-2

Test Table (For RB413D)

Test	Work Order Description	Nominal Value
T01	Check: Interruption of Voltage Supply Circuit	
	• Ignition OFF • Disconnect wiring harness connector from: MAF and IAT Sensor • Ignition ON • Measure voltage between the following terminals: MAF and IAT Sensor – Wiring harness connector (wiring harness side) terminal D42-2 & Ground	greater than 11 V
	Yes: T02	No: E08
T02	Check: Short to Voltage/Interruption of Ground Circuit	
	• Measure voltage between the following terminals: MAF and IAT Sensor – Wiring harness connector (wiring harness side) terminal D42-2 & MAF and IAT Sensor – Wiring harness connector (wiring harness side) terminal D42-3	greater than 11 V
	Yes: T03	No: T07
T03	Check: Short to Voltage/Ground/Interruption of Voltage Supply	
	• Measure voltage between the following terminals: MAF and IAT Sensor – Wiring harness connector (wiring harness side) terminal D42-4 & Ground	4.8 ... 5.2 V
	Yes: T04	No: E05
T04	Check: Short to Voltage/Ground/Interruption of Signal Circuit	
	• Ignition OFF • Disconnect wiring harness connector from: ECM (Wiring Harness Connector D26) • Ignition ON • Measure voltage between the following terminals: MAF and IAT Sensor – Wiring harness connector (wiring harness side) terminal D42-5 & Ground	less than 0.3 V
	Yes: T05	No: E04
T05	Check: Short to Ground of Signal Circuit	
	• Measure resistance between the following terminals: MAF and IAT Sensor – Wiring harness connector (wiring harness side) terminal D42-5 & Ground	greater than 500 kOhm
	Yes: T06	No: E03

Test	Work Order Description	Nominal Value
T06	Check: Interruption of Signal Circuit	
	• Measure resistance between the following terminals: MAF and IAT Sensor – Wiring harness connector (wiring harness side) terminal D42-5 & ECM – Wiring harness connector (wiring harness side) terminal D26-14	less than 5 Ohm
	Yes: E01	No: E02
T07	Check: Short to Voltage of Ground Circuit	
	• Measure voltage between the following terminals: MAF and IAT Sensor – Wiring harness connector (wiring harness side) terminal D42-3 & Ground	less than 0.3 V
	Yes: E06	No: E07

Result Table (For RB413D)

Result	Cause Of Fault
E01	• Defective component: MAF and IAT Sensor or ECM **NOTE:** • **The replacement of the components must be done in the listed order. The system must be checked for proper operation after every replacement.** • **If ECM is replaced, register vehicle specification into ECM by performing procedure described in "ECM registration" in Section 6E3.**
E02	• Circuit interruption between: ECM – Wiring harness connector (wiring harness side) terminal D26-14 & MAF and IAT Sensor – Wiring harness connector (wiring harness side) terminal D42-5
E03	• Short circuit to ground between: ECM – Wiring harness connector (wiring harness side) terminal D26-14 & MAF and IAT Sensor – Wiring harness connector (wiring harness side) terminal D42-5
E04	• Short circuit to voltage between: ECM – Wiring harness connector (wiring harness side) terminal D26-14 & MAF and IAT Sensor – Wiring harness connector (wiring harness side) terminal D42-5
E05	• Circuit interruption between: ECM – Wiring harness connector (wiring harness side) terminal D26-40 & MAF and IAT Sensor – Wiring harness connector (wiring harness side) terminal D42-4
E06	• Circuit interruption between: MAF and IAT Sensor – Wiring harness connector (wiring harness side) terminal D42-3 & ECM – Wiring harness connector (wiring harness side) terminal D26-27 or • Defective component: ECM **NOTE:** **If ECM is replaced, register vehicle specification into ECM by performing procedure described in "ECM registration" in Section 6E3.**
E07	• Short circuit to voltage between: ECM – Wiring harness connector (wiring harness side) terminal D26-27 & MAF and IAT Sensor – Wiring harness connector (wiring harness side) terminal D42-3 or • Defective component: ECM **NOTE:** **If ECM is replaced, register vehicle specification into ECM by performing procedure described in "ECM registration" in Section 6E3.**

Result	Cause Of Fault
E08	• Circuit interruption between: Circuit Fuse – Output contact & MAF and IAT Sensor – Wiring harness connector (wiring harness side) terminal D42-2

C-15, Engine Coolant Temperature Sensor Circuit

Test Table (For RM413D)

Test	Work Order Description	Nominal Value
T01	Check: Short to Voltage/Ground/Interruption of Signal Circuit	
	• Ignition OFF • Disconnect wiring harness connector from: ECT Sensor • Ignition ON • Measure voltage between the following terminals: ECT Sensor – Wiring harness connector (wiring harness side) terminal C19-1 & Ground	4.8 ... 5.2 V
	Yes: T02	No: T05
T02	Check: Circuit Interruption of Ground Circuit	
	• Measure voltage between the following terminals: ECT Sensor – Wiring harness connector (wiring harness side) terminal C19-2 & ECT Sensor – Wiring harness connector (wiring harness side) terminal C19-1	4.8 ... 5.2 V
	Yes: T03	No: E03
T03	Check: Component	
	• Scan Tool Data List Parameter Coolant Temperature	greater than 4.8 V
	Yes: T04	No: E02
T04	Check: Component	
	• Ignition OFF • Connect fused jumper wire to: ECT Sensor – Wiring harness connector (wiring harness side) terminal C19-2 & ECT Sensor – Wiring harness connector (wiring harness side) terminal C19-1 • Ignition ON • Scan Tool Data List Parameter Coolant Temperature	less than 0.3 V
	Yes: E01	No: E02
T05	Check: Short to Voltage/Ground/Interruption of Signal Circuit	
	• Ignition OFF • Disconnect wiring harness connector from: ECT Sensor • Ignition ON • Measure voltage between the following terminals: ECT Sensor – Wiring harness connector (wiring harness side) terminal C19-1 & Ground	greater than 5.2 V
	Yes: E04	No: E05

Result Table (For RM413D)

Result	Cause Of Fault
E01	• Defective component: ECT Sensor
E02	• Defective component: ECM **NOTE:** **If ECM is replaced, register vehicle specification into ECM by performing procedure described in "ECM registration" in Section 6E3.**
E03	• Short circuit to voltage/interruption of circuit between: ECM – Wiring harness connector (wiring harness side) terminal C66-29 & ECT Sensor – Wiring harness connector (wiring harness side) terminal C19-2 or • Defective component: ECM **NOTE:** **If ECM is replaced, register vehicle specification into ECM by performing procedure described in "ECM registration" in Section 6E3.**
E04	• Short circuit to voltage between: ECM – Wiring harness connector (wiring harness side) terminal C66-54 & ECT Sensor – Wiring harness connector (wiring harness side) terminal C19-1 or • Defective component: ECM **NOTE:** **If ECM is replaced, register vehicle specification into ECM by performing procedure described in "ECM registration" in Section 6E3.**
E05	• Short circuit to ground between: ECM – Wiring harness connector (wiring harness side) terminal C66-54 & ECT Sensor – Wiring harness connector (wiring harness side) terminal C19-1 or • Defective component: ECM **NOTE:** **If ECM is replaced, register vehicle specification into ECM by performing procedure described in "ECM registration" in Section 6E3.**

Test Table (For RB413D)

Test	Work Order Description	Nominal Value
T01	Check: Short to Voltage/Ground/Interruption of Signal Circuit	
	• Ignition OFF • Disconnect wiring harness connector from: ECT Sensor • Ignition ON • Measure voltage between the following terminals: ECT Sensor – Wiring harness connector (wiring harness side) terminal D44-1 & Ground	4.8 ... 5.2 V
	Yes: T02	No: T05
T02	Check: Circuit Interruption of Ground Circuit	
	• Measure voltage between the following terminals: ECT Sensor – Wiring harness connector (wiring harness side) terminal D44-2 & ECT Sensor – Wiring harness connector (wiring harness side) terminal D44-1	4.8 ... 5.2 V
	Yes: T03	No: E03
T03	Check: Component	
	• Scan Tool Data List Parameter Coolant Temperature	greater than 4.8 V
	Yes: T04	No: E02
T04	Check: Component	
	• Ignition OFF • Connect fused jumper wire to: ECT Sensor – Wiring harness connector (wiring harness side) terminal D44-2 & ECT Sensor – Wiring harness connector (wiring harness side) terminal D44-1 • Ignition ON • Scan Tool Data List Parameter Coolant Temperature	less than 0.3 V
	Yes: E01	No: E02
T05	Check: Short to Voltage/Ground/Interruption of Signal Circuit	
	• Ignition OFF • Disconnect wiring harness connector from: ECT Sensor • Ignition ON • Measure voltage between the following terminals: ECT Sensor – Wiring harness connector (wiring harness side) terminal D44-1 & Ground	greater than 5.2 V
	Yes: E04	No: E05

Result Table (For RB413D)

Result	Cause Of Fault
E01	• Defective component: ECT Sensor
E02	• Defective component: ECM **NOTE:** **If ECM is replaced, register vehicle specification into ECM by performing procedure described in "ECM registration" in Section 6E3.**
E03	• Short circuit to voltage/interruption of circuit between: ECM – Wiring harness connector (wiring harness side) terminal D26-29 & ECT Sensor – Wiring harness connector (wiring harness side) terminal D44-2 or • Defective component: ECM **NOTE:** **If ECM is replaced, register vehicle specification into ECM by performing procedure described in "ECM registration" in Section 6E3.**
E04	• Short circuit to voltage between: ECM – Wiring harness connector (wiring harness side) terminal D26-54 & ECT Sensor – Wiring harness connector (wiring harness side) terminal D44-1 or • Defective component: ECM **NOTE:** **If ECM is replaced, register vehicle specification into ECM by performing procedure described in "ECM registration" in Section 6E3.**
E05	• Short circuit to ground between: ECM – Wiring harness connector (wiring harness side) terminal D26-54 & ECT Sensor – Wiring harness connector (wiring harness side) terminal D44-1 or • Defective component: ECM **NOTE:** **If ECM is replaced, register vehicle specification into ECM by performing procedure described in "ECM registration" in Section 6E3.**

C-16, Fuel Temperature Sensor Circuit

Test Table (For RM413D)

Test	Work Order Description	Nominal Value
T01	Check: Short to Voltage of Signal Circuit	
	• Ignition OFF • Disconnect wiring harness connector from: ECM • Ignition ON • Measure voltage between the following terminals: ECM – Wiring harness connector (wiring harness side) terminal E27-13 & Ground	less than 0.3 V
	Yes: T02	No: E05
T02	Check: Short to Ground of Signal Circuit	
	• Ignition OFF • Measure resistance between the following terminals: ECM – Wiring harness connector (wiring harness side) terminal E27-13 & Ground	greater than 500 kOhm
	Yes: T03	No: E04
T03	Check: Interruption of Signal Circuit	
	• Disconnect wiring harness connector from: Fuel Heater and Temperature Sensor • Measure resistance between the following terminals: ECM – Wiring harness connector (wiring harness side) terminal E27-13 & Fuel Heater and Temperature Sensor – Wiring harness connector (wiring harness side) terminal E50-4	less than 5 Ohm
	Yes: T04	No: E03
T04	Check: Interruption of Signal Circuit	
	• Measure resistance between the following terminals: ECM – Wiring harness connector (wiring harness side) terminal E27-61 & Fuel Heater and Temperature Sensor – Wiring harness connector (wiring harness side) terminal E50-3	less than 5 Ohm
	Yes: E01	No: E02

Result Table (For RM413D)

Result	Cause Of Fault
E01	• Defective component: Fuel Heater and Temperature Sensor or ECM **NOTE:** • **The replacement of the components must be done in the listed order.** **The system must be checked for proper operation after every replacement.** • **If ECM is replaced, register vehicle specification into ECM by performing procedure described in "ECM registration" in Section 6E3.**
E02	• Circuit interruption between: ECM – Wiring harness connector (wiring harness side) terminal E27-61 & Fuel Heater and Temperature Sensor – Wiring harness connector (wiring harness side) terminal E50-3
E03	• Circuit interruption between: ECM – Wiring harness connector (wiring harness side) terminal E27-13 & Fuel Heater and Temperature Sensor – Wiring harness connector (wiring harness side) terminal E50-4
E04	• Short circuit to ground between: ECM – Wiring harness connector (wiring harness side) terminal E27-13 & Fuel Heater and Temperature Sensor – Wiring harness connector (wiring harness side) terminal E50-1 or ECM – Wiring harness connector (wiring harness side) terminal E27-61 & Fuel Heater and Temperature Sensor – Wiring harness connector (wiring harness side) terminal E50-3 or • Defective component: Fuel Heater and Temperature Sensor
E05	• Short circuit to voltage between: ECM – Wiring harness connector (wiring harness side) terminal E27-13 & Fuel Heater and Temperature Sensor Wiring harness connector (wiring harness side) terminal E50-4 or ECM – Wiring harness connector (wiring harness side) terminal E27-61 & Fuel Heater and Temperature Sensor – Wiring harness connector (wiring harness side) terminal E50-3 or • Defective component: Fuel Heater and Temperature Sensor

Test Table (For RB413D)

Test	Work Order Description	Nominal Value
T01	Check: Short to Voltage of Signal Circuit	
	• Ignition OFF • Disconnect wiring harness connector from: ECM • Ignition ON • Measure voltage between the following terminals: ECM – Wiring harness connector (wiring harness side) terminal G88-13 & Ground	less than 0.3 V
	Yes: T02	No: E05
T02	Check: Short to Ground of Signal Circuit	
	• Ignition OFF • Measure resistance between the following terminals: ECM – Wiring harness connector (wiring harness side) terminal G88-13 & Ground	greater than 500 kOhm
	Yes: T03	No: E04
T03	Check: Interruption of Signal Circuit	
	• Disconnect wiring harness connector from: Fuel Heater and Temperature Sensor • Measure resistance between the following terminals: ECM – Wiring harness connector (wiring harness side) terminal G88-13 & Fuel Heater and Temperature Sensor – Wiring harness connector (wiring harness side) terminal E67-4	less than 5 Ohm
	Yes: T04	No: E03
T04	Check: Interruption of Signal Circuit	
	• Measure resistance between the following terminals: ECM – Wiring harness connector (wiring harness side) terminal G88-61 & Fuel Heater and Temperature Sensor – Wiring harness connector (wiring harness side) terminal E67-3	less than 5 Ohm
	Yes: E01	No: E02

Result Table (For RB413D)

Result	Cause Of Fault
E01	• Defective component: Fuel Heater and Temperature Sensor or ECM **NOTE:** • **The replacement of the components must be done in the listed order.** **The system must be checked for proper operation after every replacement.** • **If ECM is replaced, register vehicle specification into ECM by performing procedure described in "ECM registration" in Section 6E3.**
E02	• Circuit interruption between: ECM – Wiring harness connector (wiring harness side) terminal G88-61 & Fuel Heater and Temperature Sensor – Wiring harness connector (wiring harness side) terminal E67-3
E03	• Circuit interruption between: ECM – Wiring harness connector (wiring harness side) terminal G88-13 & Fuel Heater and Temperature Sensor – Wiring harness connector (wiring harness side) terminal E67-4
E04	• Short circuit to ground between: ECM – Wiring harness connector (wiring harness side) terminal G88-13 & Fuel Heater and Temperature Sensor – Wiring harness connector (wiring harness side) terminal E67-4 or ECM – Wiring harness connector (wiring harness side) terminal G88-61 & Fuel Heater and Temperature Sensor – Wiring harness connector (wiring harness side) terminal E67-3 or • Defective component: Fuel Heater and Temperature Sensor
E05	• Short circuit to voltage between: ECM – Wiring harness connector (wiring harness side) terminal G88-13 & Fuel Heater and Temperature Sensor – Wiring harness connector (wiring harness side) terminal E67-4 or ECM – Wiring harness connector (wiring harness side) terminal G88-61 & Fuel Heater and Temperature Sensor – Wiring harness connector (wiring harness side) terminal E67-3 or • Defective component: Fuel Heater and Temperature Sensor

C-17, Fuel Rail Pressure Sensor Circuit

NOTE:

Before starting diagnosis, check the value of the fuel rail pressure by using scan tool.
For checking the value, refer to "B-02, Data List" in this section.
If the value is less than 0.15 V or more than 4.85 V, go to "C-17, Fuel Rail Pressure Sensor Circuit". If not, go to "C-18, Rail Oil Pressure Sensor Circuit".

Test Table (For RM413D)

Test	Work Order Description	Nominal Value
T01	Check: Short to Voltage/Ground/Interruption of Signal Circuit	
	• Ignition OFF • Disconnect wiring harness connector from: Fuel Pressure Sensor • Ignition ON • Measure voltage between the following terminals: Fuel Pressure Sensor – Wiring harness connector (wiring harness side) terminal C40-3 & Ground	4.8 ... 5.2 V
	Yes: T02	No: T06
T02	Check: Short to Voltage/Interruption of Signal Circuit	
	• Measure voltage between the following terminals: Fuel Pressure Sensor – Wiring harness connector (wiring harness side) terminal C40-3 & Fuel Pressure Sensor – Wiring harness connector (wiring harness side) terminal C40-1	4.8 ... 5.2 V
	Yes: T03	No: E05
T03	Check: Short to Voltage of Signal Circuit	
	• Ignition OFF • Disconnect wiring harness connector from: ECM (Wiring Harness Connector C66) • Ignition ON • Measure voltage between the following terminal: Fuel Pressure Sensor – Wiring harness connector (wiring harness side) terminal C40-2 & Ground	less than 0.3 V
	Yes: T04	No: E04
T04	Check: Short to Ground/Interruption of Signal Circuit	
	• Ignition OFF • Measure resistance between the following terminal: Fuel Pressure Sensor – Wiring harness connector (wiring harness side) terminal C40-2 & Ground	greater than 500 kOhm
	Yes: T05	No: E03

Test	Work Order Description	Nominal Value
T05	Check: Interruption in Wiring Harness	
	• Measure resistance between the following terminals: Fuel Pressure Sensor – Wiring harness connector (wiring harness side) terminal C40-2 & ECM – Wiring harness connector (wiring harness side) terminal C66-38	less than 5 Ohm
	Yes: E01	No: E02
T06	Check: Short to Voltage/Ground/Interruption of Signal Circuit	
	• Ignition OFF • Disconnect wiring harness connector from: Fuel Pressure Sensor • Ignition ON • Measure voltage between the following terminals: Fuel Pressure Sensor – Wiring harness connector (wiring harness side) terminal C40-3 & Ground	greater than 5.2 V
	Yes: E06	No: E07

Result Table (For RM413D)

Result	Cause Of Fault
E01	• Defective component: Fuel Pressure Sensor or ECM **NOTE:** **• The replacement of the components must be done in the listed order.** **The system must be checked for proper operation after every replacement.** **• If ECM is replaced, register vehicle specification into ECM by performing procedure described in "ECM registration" in Section 6E3.**
E02	• Circuit interruption between: ECM – Wiring harness connector (wiring harness side) terminal C66-38 & Fuel Pressure Sensor – Wiring harness connector (wiring harness side) terminal C40-2
E03	• Short circuit to ground between: Fuel Pressure Sensor – Wiring harness connector (wiring harness side) terminal C40-2 & ECM – Wiring harness connector (wiring harness side) terminal C66-38
E04	• Short circuit to voltage between: Fuel Pressure Sensor – Wiring harness connector (wiring harness side) terminal C40-2 & ECM – Wiring harness connector (wiring harness side) terminal C66-38
E05	• Short circuit to voltage/interruption of circuit between: ECM – Wiring harness connector (wiring harness side) terminal C66-6 & Fuel Pressure Sensor – Wiring harness connector (wiring harness side) terminal E50-1 or • Defective component: ECM **NOTE:** **If ECM is replaced, register vehicle specification into ECM by performing procedure described in "ECM registration" in Section 6E3.**
E06	• Short circuit to voltage between: ECM – Wiring harness connector (wiring harness side) terminal C66-8 & Fuel Pressure Sensor – Wiring harness connector (wiring harness side) terminal C40-3 or • Defective component: ECM **NOTE:** **If ECM is replaced, register vehicle specification into ECM by performing procedure described in "ECM registration" in Section 6E3.**

Result	Cause Of Fault
E07	• Short circuit to ground/interruption of circuit between: ECM – Wiring harness connector (wiring harness side) terminal C66-8 & Fuel Pressure Sensor – Wiring harness connector (wiring harness side) terminal C40-3 or • Defective component: ECM **NOTE:** **If ECM is replaced, register vehicle specification into ECM by performing procedure described in "ECM registration" in Section 6E3.**

Test Table (For RB413D)

Test	Work Order Description	Nominal Value
T01	Check: Short to Voltage/Ground/Interruption of Signal Circuit	
	• Ignition OFF • Disconnect wiring harness connector from: Fuel Pressure Sensor • Ignition ON • Measure voltage between the following terminals: Fuel Pressure Sensor – Wiring harness connector (wiring harness side) terminal D28-1 & Ground	4.8 ... 5.2 V
	Yes: T02	No: T06
T02	Check: Short to Voltage/Interruption of Signal Circuit	
	• Measure voltage between the following terminals: Fuel Pressure Sensor – Wiring harness connector (wiring harness side) terminal D28-1 & Fuel Pressure Sensor – Wiring harness connector (wiring harness side) terminal D28-2	4.8 ... 5.2 V
	Yes: T03	No: E05
T03	Check: Short to Voltage of Signal Circuit	
	• Ignition OFF • Disconnect wiring harness connector from: ECM (Wiring Harness Connector D26) • Ignition ON • Measure voltage between the following terminals: Fuel Pressure Sensor – Wiring harness connector (wiring harness side) terminal D28-3 & Ground	less than 0.3 V
	Yes: T04	No: E04
T04	Check: Short to Ground/Interruption of Signal Circuit	
	• Ignition OFF • Measure resistance between the following terminals: Fuel Pressure Sensor – Wiring harness connector (wiring harness side) terminal D28-3 & Ground	greater than 500 kOhm
	Yes: T05	No: E03
T05	Check: Interruption in Wiring Harness	
	• Measure resistance between the following terminals: Fuel Pressure Sensor – Wiring harness connector (wiring harness side) terminal D28-3 & ECM – Wiring harness connector (wiring harness side) terminal D26-38	less than 5 Ohm
	Yes: E01	No: E02

Test	Work Order Description	Nominal Value
T06	Check: Short to Voltage/Ground/Interruption of Signal Circuit	
	• Ignition OFF • Disconnect wiring harness connector from: Fuel Pressure Sensor • Ignition ON • Measure voltage between the following terminals: Fuel Pressure Sensor – Wiring harness connector (wiring harness side) terminal D28-1 & Ground	greater than 5.2 V
	Yes: E06	No: E07

Result Table (For RB413D)

Result	Cause Of Fault
E01	• Defective component: Fuel Pressure Sensor or ECM **NOTE:** **• The replacement of the components must be done in the listed order.** **The system must be checked for proper operation after every replacement.** **• If ECM is replaced, register vehicle specification into ECM by performing procedure described in "ECM registration" in Section 6E3.**
E02	• Circuit interruption between: ECM – Wiring harness connector (wiring harness side) terminal D26-38 & Fuel Pressure Sensor – Wiring harness connector (wiring harness side) terminal D28-3
E03	• Short circuit to ground between: Fuel Pressure Sensor – Wiring harness connector (wiring harness side) terminal D28-3 & ECM – Wiring harness connector (wiring harness side) terminal D26-38
E04	• Short circuit to voltage between: Fuel Pressure Sensor – Wiring harness connector (wiring harness side) terminal D28-3 & ECM – Wiring harness connector (wiring harness side) terminal D26-38
E05	• Short circuit to voltage/interruption of circuit between: ECM – Wiring harness connector (wiring harness side) terminal D26-6 & Fuel Pressure Sensor – Wiring harness connector (wiring harness side) terminal D28-2 or • Defective component: ECM **NOTE:** **If ECM is replaced, register vehicle specification into ECM by performing procedure described in "ECM registration" in Section 6E3.**
E06	• Short circuit to voltage between: ECM – Wiring harness connector (wiring harness side) terminal D26-8 & Fuel Pressure Sensor – Wiring harness connector (wiring harness side) terminal D28-1 or • Defective component: ECM **NOTE:** **If ECM is replaced, register vehicle specification into ECM by performing procedure described in "ECM registration" in Section 6E3.**

Result	Cause Of Fault
E07	• Short circuit to ground/interruption of circuit between: ECM – Wiring harness connector (wiring harness side) terminal D26-8 & Fuel Pressure Sensor – Wiring harness connector (wiring harness side) terminal D28-1 or • Defective component: ECM **NOTE:** **If ECM is replaced, register vehicle specification into ECM by performing procedure described in "ECM registration" in Section 6E3.**

C-18, Rail Oil Pressure Sensor Circuit

Test Table

Test	Work Order Description	Nominal Value
T01	Check: Diagnostic Trouble Code stored	
	Is the following Diagnostic Trouble Code stored? P1192 Rail Pressure Higher Than Maximum	
	Yes: E01	No: T02
T02	Check: Diagnostic Trouble Code stored	
	Is the following Diagnostic Trouble Code stored? P1190 Fuel Pressure Regulator Flow	
	Yes: E01	No: E02

Result Table

Result	Cause Of Fault
E01	• Defective component: Fuel Pressure Sensor or Fuel Pressure Regulator **NOTE:** **The replacement of the components must be done in the listed order.** **The system must be checked for proper operation after every replacement.**
E02	• Defective component: Fuel Pressure Sensor

C-19, Fuel Rail Pressure Control Valve Circuit

Test Table (For RM413D)

Test	Work Order Description	Nominal Value
T01	Check: Interruption of Voltage Supply Circuit	
	• Ignition OFF • Disconnect wiring harness connector from: Fuel Pressure Regulator • Ignition ON • Measure voltage between the following terminals: Fuel Pressure Regulator – Wiring harness connector (wiring harness side) terminal C20-1 & Ground	greater than 11 V
	Yes: T02	No: T05
T02	Check: Short to Voltage of Signal Circuit	
	• Measure voltage between the following terminals: Fuel Pressure Regulator – Wiring harness connector (wiring harness side) terminal C20-1 & Fuel Pressure Regulator – Wiring harness connector (wiring harness side) terminal C20-2	greater than 11 V
	Yes: E01	No: T03
T03	Check: Short to Ground of Signal Circuit	
	• Ignition OFF • Disconnect wiring harness connector from: ECM (Wiring Harness Connector C66) • Measure resistance between the following terminals: Fuel Pressure Regulator – Wiring harness connector (wiring harness side) terminal C20-2 & Ground	greater than 500 kOhm
	Yes: T04	No: E04
T04	Check: Interruption of Signal Circuit	
	• Measure resistance between the following terminals: ECM – Wiring harness connector (wiring harness side) terminal C66-34 & Fuel Pressure Regulator – Wiring harness connector (wiring harness side) terminal C20-2	less than 5 Ohm
	Yes: E02	No: E03
T05	Check: Short to Ground of Signal Circuit	
	• Ignition OFF • Disconnect wiring harness connector from: ECM (Wiring Harness Connector C66) • Measure resistance between the following terminals: Fuel Pressure Regulator – Wiring harness connector (wiring harness side) terminal C20-1 & Ground	greater than 500 kOhm
	Yes: T06	No: E07

Test	Work Order Description	Nominal Value
T06	Check: Short to Ground of Signal Circuit	
	• Measure resistance between the following terminals: ECM – Wiring harness connector (wiring harness side) terminal C66-4 & Fuel Pressure Regulator – Wiring harness connector (wiring harness side) terminal C20-1	less than 5 kOhm
	Yes: T07	No: E06
T07	Check: Interruption of Signal Circuit	
	• Disconnect wiring harness connector from: ECM (Wiring Harness Connector E27) • Connect fused jumper wire to: ECM – Wiring harness connector (wiring harness side) terminal E27-80 & Ground • Measure voltage between the following terminals: ECM – Wiring harness connector (wiring harness side) terminal E27-5 & Ground	greater than 11 V
	Yes: E02	No: E05

Result Table (For RM413D)

Result	Cause Of Fault
E01	• Defective component: Fuel Pressure Regulator
E02	• Defective component: ECM **NOTE:** **If ECM is replaced, register vehicle specification into ECM by performing procedure described in "ECM registration" in Section 6E3.**
E03	• Circuit interruption between: ECM – Wiring harness connector (wiring harness side) terminal C66-34 & Fuel Pressure Regulator – Wiring harness connector (wiring harness side) terminal C20-2
E04	• Short circuit to ground between: ECM – Wiring harness connector (wiring harness side) terminal C66-34 & Fuel Pressure Regulator – Wiring harness connector (wiring harness side) terminal C20-2
E05	• Circuit interruption between: ECM – Wiring harness connector (wiring harness side) terminal E27-5 & Main Relay – Socket Terminal E58-4
E06	• Circuit interruption between: ECM – Wiring harness connector (wiring harness side) terminal C66-4 & Fuel Pressure Regulator – Wiring harness connector (wiring harness side) terminal C20-1
E07	• Short circuit to ground between: ECM – Wiring harness connector (wiring harness side) terminal C66-4 & Fuel Pressure Regulator – Wiring harness connector (wiring harness side) terminal C20-1

Test Table (For RB413D)

Test	Work Order Description	Nominal Value
T01	Check: Interruption of Voltage Supply Circuit	
	• Ignition OFF • Disconnect wiring harness connector from: Fuel Pressure Regulator • Ignition ON • Measure voltage between the following terminals: Fuel Pressure Regulator – Wiring harness connector (wiring harness side) terminal D30-1 & Ground	greater than 11 V
	Yes: T02	No: T05
T02	Check: Short to Voltage of Signal Circuit	
	• Measure voltage between the following terminals: Fuel Pressure Regulator – Wiring harness connector (wiring harness side) terminal D30-1 & Fuel Pressure Regulator – Wiring harness connector (wiring harness side) terminal D30-2	greater than 11 V
	Yes: E01	No: T03
T03	Check: Short to Ground of Signal Circuit	
	• Ignition OFF • Disconnect wiring harness connector from: ECM (Wiring Harness Connector D26) • Measure resistance between the following terminals: Fuel Pressure Regulator – Wiring harness connector (wiring harness side) terminal D30-2 & Ground	greater than 500 kOhm
	Yes: T04	No: E04
T04	Check: Interruption of Signal Circuit	
	• Measure resistance between the following terminals: ECM – Wiring harness connector (wiring harness side) terminal D26-34 & Fuel Pressure Regulator – Wiring harness connector (wiring harness side) terminal D30-2	less than 5 Ohm
	Yes: E02	No: E03
T05	Check: Short to Ground of Signal Circuit	
	• Ignition OFF • Disconnect wiring harness connector from: ECM (Wiring Harness Connector D26) • Measure resistance between the following terminals: Fuel Pressure Regulator – Wiring harness connector (wiring harness side) terminal D30-1 & Ground	greater than 500 kOhm
	Yes: T06	No: E07

Test	Work Order Description	Nominal Value
T06	Check: Short to Ground of Signal Circuit	
	• Measure resistance between the following terminals: ECM – Wiring harness connector (wiring harness side) terminal D26-4 & Fuel Pressure Regulator – Wiring harness connector (wiring harness side) terminal D30-1	less than 5 kOhm
	Yes: T07	No: E06
T07	Check: Interruption of Signal Circuit	
	• Disconnect wiring harness connector from: ECM (Wiring Harness Connector G88) • Connect fused jumper wire to: ECM – Wiring harness connector (wiring harness side) terminal G88-80 & Ground • Measure voltage between the following terminals: ECM – Wiring harness connector (wiring harness side) terminal G88-5 & Ground	greater than 11 V
	Yes: E02	No: E05

Result Table (For RB413D)

Result	Cause Of Fault
E01	• Defective component: Fuel Pressure Regulator
E02	• Defective component: ECM **NOTE:** **If ECM is replaced, register vehicle specification into ECM by performing procedure described in "ECM registration" in Section 6E3.**
E03	• Circuit interruption between: ECM – Wiring harness connector (wiring harness side) terminal D26-34 & Fuel Pressure Regulator – Wiring harness connector (wiring harness side) terminal D30-2
E04	• Short circuit to ground between: ECM – Wiring harness connector (wiring harness side) terminal D26-34 & Fuel Pressure Regulator – Wiring harness connector (wiring harness side) terminal D30-2
E05	• Circuit interruption between: ECM – Wiring harness connector (wiring harness side) terminal G88-5 & Main Relay – Socket Terminal E75-4
E06	• Circuit interruption between: ECM – Wiring harness connector (wiring harness side) terminal D26-4 & Fuel Pressure Regulator – Wiring harness connector (wiring harness side) terminal D30-1
E07	• Short circuit to ground between: ECM – Wiring harness connector (wiring harness side) terminal D26-4 & Fuel Pressure Regulator – Wiring harness connector (wiring harness side) terminal D30-1

C-20, Camshaft Position Sensor Circuit

Test Table (For RM413D)

Test	Work Order Description	Nominal Value
T01	Check: Interruption of Signal Circuit	4.8 ... 5.2 V
	• Ignition OFF • Disconnect wiring harness connector from: Camshaft Position Sensor • Ignition ON • Measure voltage between the following terminals: Camshaft Position Sensor – Wiring harness connector (wiring harness side) terminal C69-3 & Ground	
	Yes: T02	No: E06
T02	Check: Interruption of Signal Circuit	4.8 ... 5.2 V
	• Measure voltage between the following terminals: Camshaft Position Sensor – Wiring harness connector (wiring harness side) terminal C69-3 & Camshaft Position Sensor – Wiring harness connector (wiring harness side) terminal C69-1	
	Yes: T03	No: E05
T03	Check: Short to Voltage/Ground/Interruption of Signal Circuit	4.8 ... 5.2 V
	• Measure voltage between the following terminals: Camshaft Position Sensor – Wiring harness connector (wiring harness side) terminal C69-2 & Ground	
	Yes: T04	No: T05
T04	Check: Adjustment	Test okay?
	• Check the following component for proper operation: Camshaft Position Sensor (intermittent problems, missing teeth, wrong reference point, incorrect gap position, etc.)	
	Yes: E01	No: E02
T05	Check: Short to Voltage/Ground/Interruption of Signal Circuit	greater than 5.2 V
	• Measure voltage between the following terminals: Camshaft Position Sensor – Wiring harness connector (wiring harness side) terminal C69-2 & Ground	
	Yes: E03	No: E04

Result Table (For RM413D)

Result	Cause Of Fault
E01	• Defective component: Camshaft Position Sensor or ECM **NOTE:** • **The replacement of the components must be done in the listed order.** **The system must be checked for proper operation after every replacement.** • **If ECM is replaced, register vehicle specification into ECM by performing procedure described in "ECM registration" in Section 6E3.**
E02	• Repair the concerned circuit/component.
E03	• Short circuit to voltage between: ECM – Wiring harness connector (wiring harness side) terminal C66-56 & Camshaft Position Sensor – Wiring harness connector (wiring harness side) terminal C69-2 or • Defective component: ECM **NOTE:** **If ECM is replaced, register vehicle specification into ECM by performing procedure described in "ECM registration" in Section 6E3.**
E04	• Short circuit to ground/interruption of circuit between: ECM – Wiring harness connector (wiring harness side) terminal C66-56 & Camshaft Position Sensor – Wiring harness connector (wiring harness side) terminal C69-2 or • Defective component: ECM **NOTE:** **If ECM is replaced, register vehicle specification into ECM by performing procedure described in "ECM registration" in Section 6E3.**
E05	• Circuit interruption between: ECM – Wiring harness connector (wiring harness side) terminal C66-21 & Camshaft Position Sensor – Wiring harness connector (wiring harness side) terminal C69-1 or • Defective component: ECM **NOTE:** **If ECM is replaced, register vehicle specification into ECM by performing procedure described in "ECM registration" in Section 6E3.**

Result	Cause Of Fault
E06	• Circuit interruption between: ECM – Wiring harness connector (wiring harness side) terminal C66-25 & Camshaft Position Sensor – Wiring harness connector (wiring harness side) terminal C69-3 or • Defective component: ECM **NOTE:** **If ECM is replaced, register vehicle specification into ECM by performing procedure described in "ECM registration" in Section 6E3.**

Test Table (For RB413D)

Test	Work Order Description	Nominal Value
T01	Check: Interruption of Signal Circuit	
	• Ignition OFF • Disconnect wiring harness connector from: Camshaft Position Sensor • Ignition ON • Measure voltage between the following terminals: Camshaft Position Sensor – Wiring harness connector (wiring harness side) terminal D33-1 & Ground	4.8 ... 5.2 V
	Yes: T02	No: E06
T02	Check: Interruption of Signal Circuit	
	• Measure voltage between the following terminals: Camshaft Position Sensor – Wiring harness connector (wiring harness side) terminal D33-1 & Camshaft Position Sensor – Wiring harness connector (wiring harness side) terminal D33-3	4.8 ... 5.2 V
	Yes: T03	No: E05
T03	Check: Short to Voltage/Ground/Interruption of Signal Circuit	
	• Measure voltage between the following terminals: Camshaft Position Sensor – Wiring harness connector (wiring harness side) terminal D33-2 & Ground	4.8 ... 5.2 V
	Yes: T04	No: T05
T04	Check: Adjustment	
	• Check the following component for proper operation: Camshaft Position Sensor (intermittent problems, missing teeth, wrong reference point, incorrect gap position, etc.)	Test okay?
	Yes: E01	No: E02
T05	Check: Short to Voltage/Ground/Interruption of Signal Circuit	
	• Measure voltage between the following terminals: Camshaft Position Sensor – Wiring harness connector (wiring harness side) terminal D33-2 & Ground	greater than 5.2 V
	Yes: E03	No: E04

Result Table (For RB413D)

Result	Cause Of Fault
E01	• Defective component: Camshaft Position Sensor or ECM **NOTE:** **The replacement of the components must be done in the listed order.** **The system must be checked for proper operation after every replacement.** **NOTE:** **If ECM is replaced, register vehicle specification into ECM by performing procedure described in "ECM registration" in Section 6E3.**
E02	• Repair the concerned circuit/component.
E03	• Short circuit to voltage between: ECM – Wiring harness connector (wiring harness side) terminal D26-56 & Camshaft Position Sensor – Wiring harness connector (wiring harness side) terminal D33-2 or • Defective component: ECM **NOTE:** **If ECM is replaced, register vehicle specification into ECM by performing procedure described in "ECM registration" in Section 6E3.**
E04	• Short circuit to ground/interruption of circuit between: ECM – Wiring harness connector (wiring harness side) terminal D26-56 & Camshaft Position Sensor – Wiring harness connector (wiring harness side) terminal D33-2 or • Defective component: ECM **NOTE:** **If ECM is replaced, register vehicle specification into ECM by performing procedure described in "ECM registration" in Section 6E3.**
E05	• Circuit interruption between: ECM – Wiring harness connector (wiring harness side) terminal D26-21 & Camshaft Position Sensor – Wiring harness connector (wiring harness side) terminal D33-3 or • Defective component: ECM **NOTE:** **If ECM is replaced, register vehicle specification into ECM by performing procedure described in "ECM registration" in Section 6E3.**

Result	Cause Of Fault
E06	• Circuit interruption between: ECM – Wiring harness connector (wiring harness side) terminal D26-25 & Camshaft Position Sensor – Wiring harness connector (wiring harness side) terminal D33-1 or • Defective component: ECM **NOTE:** **If ECM is replaced, register vehicle specification into ECM by performing procedure described in "ECM registration" in Section 6E3.**

C-21, Brake Switch Circuit

Test Table (For RM413D)

Test	Work Order Description	Nominal Value
T01	Check: Short to Ground/Interruption of Voltage Supply Circuit	greater than 11 V
	• Ignition OFF • Disconnect wiring harness connector from: Brake Light Switch • Measure voltage between the following terminals: Brake Light Switch – Wiring harness connector (wiring harness side) terminal E36-1 & Ground	
	Yes: T02	No: T10
T02	Check: Short to Ground/Interruption of Voltage Supply Circuit	greater than 11 V
	• Measure voltage between the following terminals: Brake Light Switch – Wiring harness connector (wiring harness side) terminal E36-4 & Ground	
	Yes: T03	No: E08
T03	Check: Short to Voltage of Signal Circuit	less than 0.3 V
	• Ignition ON • Measure voltage between the following terminals: Brake Light Switch – Wiring harness connector (wiring harness side) terminal E36-3 & Ground	
	Yes: T04	No: E07
T04	Check: Short to Voltage of Voltage Supply Circuit	less than 0.3 V
	• Measure voltage between the following terminals: Brake Light Switch – Wiring harness connector (wiring harness side) terminal E36-2 & Ground	
	Yes: T05	No: T09
T05	Check: Component	OFF
	• Scan Tool Data List Parameter Brake Switch	
	Yes: T06	No: E03
T06	Check: Interruption of Signal Circuit	ON
	• Connect fused jumper wire to: Brake Light Switch – Wiring harness connector (wiring harness side) terminal E36-2 & Battery voltage • Scan Tool Data List Parameter Brake Switch	
	Yes: T07	No: E04

Test	Work Order Description	Nominal Value
T07	Check: Component	
	• Remove fused jumper wire • Ignition OFF • Disconnect harness connector from: ECM • Ignition ON • Measure voltage between the following terminals • ECM – Wiring harness connector (wiring harness connector side) terminal E27-68 & Ground	less than 0.3 V
	Yes: T08	No: E03
T08	Check: Interruption of Signal Circuit	
	• Connect fused jumper wire to: Brake Light Switch – Wiring harness connector (wiring harness side) terminal E36-3 & Battery voltage • Measure voltage between the following terminals ECM – Wiring harness connector (wiring harness side) terminal E27-68 & Ground	greater than 11 V
	Yes: E01	No: E02
T09	Check: Component	
	• Ignition OFF • Disconnect wiring harness connector from: ECM • Ignition ON • Measure voltage between the following terminals: Brake Light Switch – Wiring harness connector (wiring harness side) terminal E36-2 & Ground • Disconnect each of the following components/control units consecutively from the wiring harness and repeat the measurement each time: – ABS Control Module – Rear Combination Lamp (Left) – Rear Combination Lamp (Right) – High Mount Stop Light	less than 0.3 V
	Yes: E05	No: E06
T10	Check: Short to Ground/Interruption of Voltage Supply Circuit	
	• Remove electrical component from socket: Circuit Fuse • Check the following component for proper operation: Circuit Fuse	Test okay?
	Yes: T11	No: T12

Test	Work Order Description	Nominal Value
T11	Check: Interruption of Voltage Supply Circuit	
	• Measure voltage between the following terminals: Circuit Fuse – Input contact & Ground	greater than 11 V
	Yes: E09	No: E10
T12	Check: Short to Ground of Voltage Supply Circuit	
	• Disconnect wiring harness connector from: ECM • Connect fused jumper wire to: Brake Light Switch – Wiring harness connector (wiring harness side) terminal E36-1 & Battery voltage • Check the following component for proper operation: Fuse of the fused jumper wire	Test okay?
	Yes: T13	No: E14
T13	Check: Short to Ground of Voltage Supply Circuit	
	• Remove fused jumper wire • Connect wiring harness connector to: ECM • Connect fused jumper wire to: Brake Light Switch – Wiring harness connector (wiring harness side) terminal E36-3 & Battery voltage • Check the following component for proper operation: Fuse of the fused jumper wire	Test okay?
	Yes: T14	No: E13
T14	Check: Short to Ground of Voltage Supply Circuit	
	• Remove fused jumper wire • Connect fused jumper wire to: Brake Light Switch – Wiring harness connector (wiring harness side) terminal E36-2 & Battery voltage • Check the following component for proper operation: Fuse of the fused jumper wire	Test okay?
	Yes: E11	No: T15

Test	Work Order Description	Nominal Value
T15	Check: Component	
	• Disconnect wiring harness connector from: Rear Combination Lamp (Left) • Insert new fuse into the socket of the fused jumper wire and then check this fuse for proper operation • Disconnect each of the following components/control units consecutively from the wiring harness and repeat the measurement each time: – Rear Combination Lamp (Right) – ABS Control Module – ECM – High Mount Stop Lamp	Test okay?
	Yes: E05	No: E12

Result Table (For RM413D)

Result	Cause Of Fault
E01	• Defective component: Brake Light Switch or ECM **NOTE:** • **The replacement of the components must be done in the listed order. The system must be checked for proper operation after every replacement.** • **If ECM is replaced, register vehicle specification into ECM by performing procedure described in "ECM registration" in Section 6E3.**
E02	• Circuit interruption between: Brake Light Switch – Wiring harness connector (wiring harness side) terminal E36-3 & ECM – Wiring harness connector (wiring harness side) terminal E27-68
E03	• Short circuit to voltage between: Brake Light Switch – Wiring harness connector (wiring harness side) terminal E36-3 & ECM – Wiring harness connector (wiring harness side) terminal E27-68
E04	• Circuit interruption between: Brake Light Switch – Wiring harness connector (wiring harness side) terminal E36-2 & ECM – Wiring harness connector (wiring harness side) terminal E27-81 or • Defective component: ECM **NOTE:** **If ECM is replaced, register vehicle specification into ECM by performing procedure described in "ECM registration" in Section 6E3.**
E05	• If the nominal value is reached during one of the measurements, the component/control unit that has been disconnected immediately before that measurement is defective.
E06	• Short circuit to voltage between: Brake Light Switch – Wiring harness connector (wiring harness side) terminal E36-2 & ABS Control Module – Wiring harness connector (wiring harness side) terminal E43-3 & ECM – Wiring harness connector (wiring harness side) terminal E27-81 & Rear Combination Lamp (Left) – Wiring harness connector (wiring harness side) terminal L02-4 & Rear Combination Lamp (Right) – Wiring harness connector (wiring harness side) terminal L01-4 & High Mount Stop Light – Wiring harness connector (wiring harness side) terminal O02-1

Result	Cause Of Fault
E07	• Short circuit to voltage between: ECM – Wiring harness connector (wiring harness side) terminal E27-68 & Brake Light Switch – Wiring harness connector (wiring harness side) terminal E36-3 or • Defective component: ECM **NOTE:** **If ECM is replaced, register vehicle specification into ECM by performing procedure described in "ECM registration" in Section 6E3.**
E08	• Circuit interruption between: Circuit Fuse – Output contact & Brake Light Switch – Wiring harness connector (wiring harness side) terminal E36-4
E09	• Circuit interruption between: Circuit Fuse – Output contact & Brake Light Switch – Wiring harness connector (wiring harness side) terminal E36-1
E10	• Circuit interruption between: Circuit Main Fuse – Output contact & Circuit Fuse – Input contact
E11	• Defective component: Brake Light Switch
E12	• Short circuit to ground between: Brake Light Switch – Wiring harness connector (wiring harness side) terminal E36-2 & ABS Control Module – Wiring harness connector (wiring harness side) terminal E43-3 & ECM – Wiring harness connector (wiring harness side) terminal E27-81 & Rear Combination Lamp (Left) – Wiring harness connector (wiring harness side) terminal L02-4 & Rear Combination Lamp (Right) – Wiring harness connector (wiring harness side) terminal L01-4 & High Mount Stop Light – Wiring harness connector (wiring harness side) terminal O02-1
E13	• Short circuit to ground between: Brake Light Switch – Wiring harness connector (wiring harness side) terminal E36-3 & ECM – Wiring harness connector (wiring harness side) terminal E27-68 or • Defective component: ECM **NOTE:** **If ECM is replaced, register vehicle specification into ECM by performing procedure described in "ECM registration" in Section 6E3.**

Result	Cause Of Fault
E14	• Short circuit to ground between: Circuit Fuse – Output contact & Brake Light Switch – Wiring harness connector (wiring harness side) terminal E36-1, E36-4 & ECM – Wiring harness connector (wiring harness side) terminal E27-50

Test Table (For RB413D)

Test	Work Order Description	Nominal Value
T01	Check: Short to Ground/Interruption of Voltage Supply Circuit	greater than 11 V
	• Ignition OFF • Disconnect wiring harness connector from: Brake Light Switch • Measure voltage between the following terminals: Brake Light Switch – Wiring harness connector (wiring harness side) terminal G15-1 & Ground	
	Yes: T02	No: T10
T02	Check: Short to Ground/Interruption of Voltage Supply Circuit	greater than 11 V
	• Measure voltage between the following terminals: Brake Light Switch – Wiring harness connector (wiring harness side) terminal G15-2 & Ground	
	Yes: T03	No: E08
T03	Check: Short to Voltage of Signal Circuit	less than 0.3 V
	• Ignition ON • Measure voltage between the following terminals: Brake Light Switch – Wiring harness connector (wiring harness side) terminal G15-4 & Ground	
	Yes: T04	No: E07
T04	Check: Short to Voltage of Voltage Supply Circuit	less than 0.3 V
	• Measure voltage between the following terminals: Brake Light Switch – Wiring harness connector (wiring harness side) terminal G15-3 & Ground	
	Yes: T05	No: T09
T05	Check: Component	OFF
	• Scan Tool Data List Parameter Brake Switch	
	Yes: T06	No: E03
T06	Check: Interruption of Signal Circuit	ON
	• Connect fused jumper wire to: Brake Light Switch – Wiring harness connector (wiring harness side) terminal G15-3 & Battery voltage • Scan Tool Data List Parameter Brake Switch	
	Yes: T07	No: E04

Test	Work Order Description	Nominal Value
T07	Check: Component	
	• Remove fused jumper wire • Ignition OFF • Disconnect harness connector from: ECM • Ignition ON • Measure voltage between the following terminals • ECM – Wiring harness connector (wiring harness connector side) terminal G88-68 & Ground	less than 0.3 V
	Yes: T08	No: E03
T08	Check: Interruption of Signal Circuit	
	• Connect fused jumper wire to: Brake Light Switch – Wiring harness connector (wiring harness side) terminal G15-4 & Battery voltage • Measure voltage between the following terminals ECM – Wiring harness connector (wiring harness side) terminal G88-68 & Ground	greater than 11 V
	Yes: E01	No: E02
T09	Check: Component	
	• Ignition OFF • Disconnect wiring harness connector from: ECM • Ignition ON • Measure voltage between the following terminals: Brake Light Switch – Wiring harness connector (wiring harness side) terminal G15-3 & Ground • Disconnect each of the following components/control units consecutively from the wiring harness and repeat the measurement each time: – ABS Control Module – Rear Combination Lamp (Left) – Rear Combination Lamp (Right) – High Mount Stop Light	less than 0.3 V
	Yes: E05	No: E06
T10	Check: Short to Ground/Interruption of Voltage Supply Circuit	
	• Remove electrical component from socket: Circuit Fuse • Check the following component for proper operation: Circuit Fuse	Test okay?
	Yes: T11	No: T12

Test	Work Order Description	Nominal Value
T11	Check: Interruption of Voltage Supply Circuit	
	• Measure voltage between the following terminals: Circuit Fuse – Input contact & Ground	greater than 11 V
	Yes: E09	No: E10
T12	Check: Short to Ground of Voltage Supply Circuit	
	• Disconnect wiring harness connector from: ECM • Connect fused jumper wire to: Brake Light Switch – Wiring harness connector (wiring harness side) terminal G15-1 & Battery voltage • Check the following component for proper operation: Fuse of the fused jumper wire	Test okay?
	Yes: T13	No: E14
T13	Check: Short to Ground of Voltage Supply Circuit	
	• Remove fused jumper wire • Connect wiring harness connector to: ECM • Connect fused jumper wire to: Brake Light Switch – Wiring harness connector (wiring harness side) terminal G15-4 & Battery voltage • Check the following component for proper operation: Fuse of the fused jumper wire	Test okay?
	Yes: T14	No: E13
T14	Check: Short to Ground of Voltage Supply Circuit	
	• Remove fused jumper wire • Connect fused jumper wire to: Brake Light Switch – Wiring harness connector (wiring harness side) terminal G15-3 & Battery voltage • Check the following component for proper operation: Fuse of the fused jumper wire	Test okay?
	Yes: E11	No: T15

Test	Work Order Description	Nominal Value
T15	Check: Component	
	• Disconnect wiring harness connector from: Rear Combination Lamp (Left) • Insert new fuse into the socket of the fused jumper wire and then check this fuse for proper operation • Disconnect each of the following components/control units consecutively from the wiring harness and repeat the measurement each time: – Rear Combination Lamp (Right) – ABS Control Module – ECM – High Mount Stop Lamp	Test okay?
	Yes: E05	No: E12

Result Table (For RB413D)

Result	Cause Of Fault
E01	• Defective component: Brake Light Switch or ECM **NOTE:** • **The replacement of the components must be done in the listed order.** **The system must be checked for proper operation after every replacement.** • **If ECM is replaced, register vehicle specification into ECM by performing procedure described in "ECM registration" in Section 6E3.**
E02	• Circuit interruption between: Brake Light Switch – Wiring harness connector (wiring harness side) terminal G15-4 & ECM – Wiring harness connector (wiring harness side) terminal G88-68
E03	• Short circuit to voltage between: Brake Light Switch – Wiring harness connector (wiring harness side) terminal G15-4 & ECM – Wiring harness connector (wiring harness side) terminal G88-68
E04	• Circuit interruption between: Brake Light Switch – Wiring harness connector (wiring harness side) terminal G15-3 & ECM – Wiring harness connector (wiring harness side) terminal G88-81 or • Defective component: ECM **NOTE:** **If ECM is replaced, register vehicle specification into ECM by performing procedure described in "ECM registration" in Section 6E3.**
E05	• If the nominal value is reached during one of the measurements, the component/control unit that has been disconnected immediately before that measurement is defective.
E06	• Short circuit to voltage between: Brake Light Switch – Wiring harness connector (wiring harness side) terminal G15-3 & ABS Control Module – Wiring harness connector (wiring harness side) terminal E20-3 & ECM – Wiring harness connector (wiring harness side) terminal G88-81 & Rear Combination Lamp (Left) – Wiring harness connector (wiring harness side) terminal L12-6 & Rear Combination Lamp (Right) – Wiring harness connector (wiring harness side) terminal L01-6 & High Mount Stop Light – Wiring harness connector (wiring harness side) terminal O03-1 (door-mounted) or O08-1 (spoiler built-in)

Result	Cause Of Fault
E07	• Short circuit to voltage between: ECM – Wiring harness connector (wiring harness side) terminal G88-68 & Brake Light Switch – Wiring harness connector (wiring harness side) terminal G15-4 or • Defective component: ECM **NOTE:** **If ECM is replaced, register vehicle specification into ECM by performing procedure described in "ECM registration" in Section 6E3.**
E08	• Circuit interruption between: Circuit Fuse – Output contact & Brake Light Switch – Wiring harness connector (wiring harness side) terminal G15-2
E09	• Circuit interruption between: Circuit Fuse – Output contact & Brake Light Switch – Wiring harness connector (wiring harness side) terminal G15-1
E10	• Circuit interruption between: Circuit Main Fuse – Output contact & Circuit Fuse – Input contact
E11	• Defective component: Brake Light Switch
E12	• Short circuit to ground between: Brake Light Switch – Wiring harness connector (wiring harness side) terminal G15-3 & ABS Control Module – Wiring harness connector (wiring harness side) terminal E20-3 & ECM – Wiring harness connector (wiring harness side) terminal G88-81 & Rear Combination Lamp (Left) – Wiring harness connector (wiring harness side) terminal L12-6 & Rear Combination Lamp (Right) – Wiring harness connector (wiring harness side) terminal L01-6 & High Mount Stop Light – Wiring harness connector (wiring harness side) terminal O03-1 (door-mounted) or O08-1 (spoiler built-in)
E13	• Short circuit to ground between: Brake Light Switch – Wiring harness connector (wiring harness side) terminal G15-4 & ECM – Wiring harness connector (wiring harness side) terminal G88-68 or • Defective component: ECM **NOTE:** **If ECM is replaced, register vehicle specification into ECM by performing procedure described in "ECM registration" in Section 6E3.**

Result	Cause Of Fault
E14	• Short circuit to ground between: Circuit Fuse – Output contact & Brake Light Switch – Wiring harness connector (wiring harness side) terminal G15-1, G15-2

C-22, Clutch Switch Circuit

Test Table (For RM413D)

Test	Work Order Description	Nominal Value
T01	Check: Interruption of Signal Circuit	
	• Ignition OFF • Disconnect wiring harness connector from: Clutch Switch • Ignition ON • Measure voltage between the following terminals: Clutch Switch – Wiring harness connector (wiring harness side) terminal E48-2 & Ground	greater than 11 V
	Yes: T02	No: E04
T02	Check: Short to Ground of Signal Circuit	
	• Ignition OFF • Disconnect harness connector from: ECM • Ignition ON • Measure voltage between the following terminals ECM – Wiring harness connector (wiring harness side) terminal E27-22 & Ground	less than 0.3 V
	Yes: T03	No: E03
T03	Check: Short to Voltage/Interruption of Signal Circuit	
	• Ignition OFF • Connect fused jumper wire to: Clutch Switch – Wiring harness connector (wiring harness side) terminal E48-1 & Clutch Switch – Wiring harness connector (wiring harness side) terminal E48-2 • Ignition ON • Measure voltage between the following terminals ECM – Wiring harness connector (wiring harness side) terminal E27-22 & Ground	greater than 11 V
	Yes: E01	No: E02

Result Table (For RM413D)

Result	Cause Of Fault
E01	• Defective component: Clutch Switch or ECM **NOTE:** • **The replacement of the components must be done in the listed order. The system must be checked for proper operation after every replacement.** • **If ECM is replaced, register vehicle specification into ECM by performing procedure described in "ECM registration" in Section 6E3.**
E02	• Circuit interruption between: Clutch Switch – Wiring harness connector (wiring harness side) terminal E48-1 & ECM – Wiring harness connector (wiring harness side) terminal E27-22
E03	• Short circuit to voltage between: Clutch Switch – Wiring harness connector (wiring harness side) terminal E48-1 & ECM – Wiring harness connector (wiring harness side) terminal E27-22 or • Defective component: ECM **NOTE:** **If ECM is replaced, register vehicle specification into ECM by performing procedure described in "ECM registration" in Section 6E3.**
E04	• Circuit interruption between: Circuit Fuse – Output contact & Clutch Switch – Wiring harness connector (wiring harness side) terminal E48-2

Test Table (For RB413D)

Test	Work Order Description	Nominal Value
T01	Check: Interruption of Signal Circuit	
	• Ignition OFF • Disconnect wiring harness connector from: Clutch Switch • Ignition ON • Measure voltage between the following terminals: Clutch Switch – Wiring harness connector (wiring harness side) terminal G85-2 & Ground	greater than 11 V
	Yes: T02	No: E04
T02	Check: Short to Ground of Signal Circuit	
	• Ignition OFF • Disconnect harness connector from: ECM • Ignition ON • Measure voltage between the following terminals ECM – Wiring harness connector (wiring harness side) terminal G88-22 & Ground	less than 0.3 V
	Yes: T03	No: E03
T03	Check: Short to Voltage/Interruption of Signal Circuit	
	• Ignition OFF • Connect fused jumper wire to: Clutch Switch – Wiring harness connector (wiring harness side) terminal G85-1 & Clutch Switch – Wiring harness connector (wiring harness side) terminal G85-2 • Ignition ON • Measure voltage between the following terminals ECM – Wiring harness connector (wiring harness side) terminal G88-22 & Ground	greater than 11 V
	Yes: E01	No: E02

Result Table (For RB413D)

Result	Cause Of Fault
E01	• Defective component: Clutch Switch or ECM **NOTE:** • **The replacement of the components must be done in the listed order. The system must be checked for proper operation after every replacement.** • **If ECM is replaced, register vehicle specification into ECM by performing procedure described in "ECM registration" in Section 6E3.**
E02	• Circuit interruption between: Clutch Switch – Wiring harness connector (wiring harness side) terminal G85-1 & ECM – Wiring harness connector (wiring harness side) terminal G85-22
E03	• Short circuit to voltage between: Clutch Switch – Wiring harness connector (wiring harness side) terminal G85-1 & ECM – Wiring harness connector (wiring harness side) terminal G88-22 or • Defective component: ECM **NOTE:** **If ECM is replaced, register vehicle specification into ECM by performing procedure described in "ECM registration" in Section 6E3.**
E04	• Circuit interruption between: Circuit Fuse – Output contact & Clutch Switch – Wiring harness connector (wiring harness side) terminal G85-2

C-23, Injector Circuit

Result Table

Result	Cause Of Fault
E01	• Defective component: ECM **NOTE:** **If ECM is replaced, register vehicle specification into ECM by performing procedure described in "ECM registration" in Section 6E3.**

C-24, Cylinder 1 Injector Circuit

Test Table (For RM413D)

Test	Work Order Description	Nominal Value
T01	Check: Diagnostic Trouble Code stored	
	Is the following Diagnostic Trouble Code stored? P0201 – Injector Circuit Malfunction Cylinder-1	
	Yes: E01	No: T02
T02	Check: Short to Voltage of Signal Circuit	
	• Ignition OFF • Disconnect wiring harness connector from: ECM (Wiring Harness Connector C66) • Ignition ON • Measure voltage between: ECM – Wiring harness connector (wiring harness side) terminal C66-47 & Ground	less than 0.3 V
	Yes: T03	No: E07
T03	Check: Short to Ground of Signal Circuit	
	• Ignition OFF • Measure resistance between: ECM – Wiring harness connector (wiring harness side) terminal C66-47 & Ground	greater than 500 kOhm
	Yes: T04	No: T07
T04	Check: Interruption of Signal Circuit	
	• Disconnect wiring harness connector from: Cylinder 1 Injector • Measure resistance between: ECM – Wiring harness connector (wiring harness side) terminal C66-16 & Cylinder 1 Injector – Wiring harness connector (wiring harness side) terminal C93-2	less than 5 Ohm
	Yes: T05	No: E04
T05	Check: Interruption of Signal Circuit	
	• Measure resistance between: ECM – Wiring harness connector (wiring harness side) terminal C66-47 & Cylinder 1 Injector – Wiring harness connector (wiring harness side) terminal C93-1	less than 5 Ohm
	Yes: T06	No: E03
T06	Check: Component	
	• Measure resistance between: Cylinder 1 Injector – Wiring harness connector (component side) terminal C93-1 & Cylinder 1 Injector – Wiring harness connector (component side) terminal C93-2	less than 3 Ohm
	Yes: E02	No: E01

Test	Work Order Description	Nominal Value
T07	Check: Short to Ground of Signal Circuit	
	• Disconnect wiring harness connector from: Cylinder 1 Injector • Measure resistance between: ECM – Wiring harness connector (wiring harness side) terminal C66-47 & Ground	greater than 500 kOhm
	Yes: E05	No: E06

Result Table (For RM413D)

Result	Cause Of Fault
E01	• Defective component: Cylinder 1 Injector **NOTE:** **If an injector has been replaced, the fuel injector calibration code of the new injector must be programmed to the ECM referring to "ECM registration" in Section 6E3.**
E02	• Defective component: ECM **NOTE:** **If ECM is replaced, register vehicle specification into ECM by performing procedure described in "ECM registration" in Section 6E3.**
E03	• Circuit interruption between: ECM – Wiring harness connector (wiring harness side) terminal C66-47 & Cylinder 1 Injector – Wiring harness connector (wiring harness side) terminal C93-1
E04	• Circuit interruption between: ECM – Wiring harness connector (wiring harness side) terminal C66-16 & Cylinder 1 Injector – Wiring harness connector (wiring harness side) terminal C93-2
E05	• Short circuit to ground between: Cylinder 1 Injector – Wiring harness connector (wiring harness side) terminal C93-2 & ECM – Wiring harness connector (wiring harness side) terminal C66-16 or • Defective component: Cylinder 1 Injector **NOTE:** **If an injector has been replaced, the fuel injector calibration code of the new injector must be programmed to the ECM referring to "ECM registration" in Section 6E3.**
E06	• Short circuit to ground between: Cylinder 1 Injector – Wiring harness connector (wiring harness side) terminal C93-1 & ECM – Wiring harness connector (wiring harness side) terminal C66-47
E07	• Short circuit to voltage between: Cylinder 1 Injector – Wiring harness connector (wiring harness side) terminal C93-1 & ECM – Wiring harness connector (wiring harness side) terminal C66-47 or • Short circuit to voltage between: Cylinder 1 Injector – Wiring harness connector (wiring harness side) terminal C93-2 & ECM – Wiring harness connector (wiring harness side) terminal C66-16

Test Table (For RB413D)

Test	Work Order Description	Nominal Value
T01	Check: Diagnostic Trouble Code stored	
	Is the following Diagnostic Trouble Code stored? P0201 – Injector Circuit Malfunction Cylinder-1	
	Yes: E01	No: T02
T02	Check: Short to Voltage of Signal Circuit	
	• Ignition OFF • Disconnect wiring harness connector from: ECM (Wiring Harness Connector D26) • Ignition ON • Measure voltage between: ECM – Wiring harness connector (wiring harness side) terminal D26-47 & Ground	less than 0.3 V
	Yes: T03	No: E07
T03	Check: Short to Ground of Signal Circuit	
	• Ignition OFF • Measure resistance between: ECM – Wiring harness connector (wiring harness side) terminal D26-47 & Ground	greater than 500 kOhm
	Yes: T04	No: T07
T04	Check: Interruption of Signal Circuit	
	• Disconnect wiring harness connector from: Cylinder 1 Injector • Measure resistance between: ECM – Wiring harness connector (wiring harness side) terminal D26-16 & Cylinder 1 Injector – Wiring harness connector (wiring harness side) terminal D38-2	less than 5 Ohm
	Yes: T05	No: E04
T05	Check: Interruption of Signal Circuit	
	• Measure resistance between: ECM – Wiring harness connector (wiring harness side) terminal D26-47 & Cylinder 1 Injector – Wiring harness connector (wiring harness side) terminal D38-1	less than 5 Ohm
	Yes: T06	No: E03
T06	Check: Component	
	• Measure resistance between: Cylinder 1 Injector – Wiring harness connector (component side) terminal D38-1 & Cylinder 1 Injector – Wiring harness connector (component side) terminal D38-2	less than 3 Ohm
	Yes: E02	No: E01

Test	Work Order Description	Nominal Value
T07	Check: Short to Ground of Signal Circuit	
	• Disconnect wiring harness connector from: Cylinder 1 Injector • Measure resistance between: ECM – Wiring harness connector (wiring harness side) terminal D26-47 & Ground	greater than 500 kOhm
	Yes: E05	No: E06

Result Table (For RB413D)

Result	Cause Of Fault
E01	• Defective component: Cylinder 1 Injector **NOTE:** **If an injector has been replaced, the fuel injector calibration code of the new injector must be programmed to the ECM referring to "ECM registration" in Section 6E3.**
E02	• Defective component: ECM **NOTE:** **If ECM is replaced, register vehicle specification into ECM by performing procedure described in "ECM registration" in Section 6E3.**
E03	• Circuit interruption between: ECM – Wiring harness connector (wiring harness side) terminal D26-47 & Cylinder 1 Injector – Wiring harness connector (wiring harness side) terminal D38-1
E04	• Circuit interruption between: ECM – Wiring harness connector (wiring harness side) terminal D26-16 & Cylinder 1 Injector – Wiring harness connector (wiring harness side) terminal D38-2
E05	• Short circuit to ground between: Cylinder 1 Injector – Wiring harness connector (wiring harness side) terminal D38-2 & ECM – Wiring harness connector (wiring harness side) terminal D26-16 or • Defective component: Cylinder 1 Injector **NOTE:** **If an injector has been replaced, the fuel injector calibration code of the new injector must be programmed to the ECM referring to "ECM registration" in Section 6E3.**
E06	• Short circuit to ground between: Cylinder 1 Injector – Wiring harness connector (wiring harness side) terminal D38-1 & ECM – Wiring harness connector (wiring harness side) terminal D26-47
E07	• Short circuit to voltage between: Cylinder 1 Injector – Wiring harness connector (wiring harness side) terminal D38-1 & ECM – Wiring harness connector (wiring harness side) terminal D26-47 or • Short circuit to voltage between: Cylinder 1 Injector – Wiring harness connector (wiring harness side) terminal D38-2 & ECM – Wiring harness connector (wiring harness side) terminal D26-16

C-25, Cylinder 2 Injector Circuit

Test Table (For RM413D)

Test	Work Order Description	Nominal Value
T01	Check: Diagnostic Trouble Code stored	
	Is the following Diagnostic Trouble Code stored? P0202 – Injector Circuit Malfunction Cylinder-2	
	Yes: E01	No: T02
T02	Check: Short to Voltage of Signal Circuit	
	• Ignition OFF • Disconnect wiring harness connector from: ECM (Wiring Harness Connector C66) • Ignition ON • Measure voltage between: ECM – Wiring harness connector (wiring harness side) terminal C66-49 & Ground	less than 0.3 V
	Yes: T03	No: E07
T03	Check: Short to Ground of Signal Circuit	
	• Ignition OFF • Measure resistance between: ECM – Wiring harness connector (wiring harness side) terminal C66-49 & Ground	greater than 500 kOhm
	Yes: T04	No: T07
T04	Check: Interruption of Signal Circuit	
	• Disconnect wiring harness connector from: Cylinder 2 Injector • Measure resistance between: ECM – Wiring harness connector (wiring harness side) terminal C66-17 & Cylinder 2 Injector – Wiring harness connector (wiring harness side) terminal C94-2	less than 5 Ohm
	Yes: T05	No: E04
T05	Check: Interruption of Signal Circuit	
	• Measure resistance between: ECM – Wiring harness connector (wiring harness side) terminal C66-49 & Cylinder 2 Injector – Wiring harness connector (wiring harness side) terminal C94-1	less than 5 Ohm
	Yes: T06	No: E03
T06	Check: Component	
	• Measure resistance between: Cylinder 2 Injector – Wiring harness connector (component side) terminal C94-1 & Cylinder 2 Injector – Wiring harness connector (component side) terminal C94-2	less than 3 Ohm
	Yes: E02	No: E01

Test	Work Order Description	Nominal Value
T07	Check: Short to Ground of Signal Circuit	
	• Disconnect wiring harness connector from: Cylinder 2 Injector • Measure resistance between: ECM – Wiring harness connector (wiring harness side) terminal C66-49 & Ground	greater than 500 kOhm
	Yes: E05	No: E06

Result Table (For RM413D)

Result	Cause Of Fault
E01	• Defective component: Cylinder 2 Injector **NOTE:** **If an injector has been replaced, the fuel injector calibration code of the new injector must be programmed to the ECM referring to "ECM registration" in Section 6E3.**
E02	• Defective component: ECM **NOTE:** **If ECM is replaced, register vehicle specification into ECM by performing procedure described in "ECM registration" in Section 6E3.**
E03	• Circuit interruption between: ECM – Wiring harness connector (wiring harness side) terminal C66-49 & Cylinder 2 Injector – Wiring harness connector (wiring harness side) terminal C94-1
E04	• Circuit interruption between: ECM – Wiring harness connector (wiring harness side) terminal C66-17 & Cylinder 2 Injector – Wiring harness connector (wiring harness side) terminal C94-2
E05	• Short circuit to ground between: Cylinder 2 Injector – Wiring harness connector (wiring harness side) terminal C94-2 & ECM – Wiring harness connector (wiring harness side) terminal C66-17 or • Defective component: Cylinder 2 Injector **NOTE:** **If an injector has been replaced, the fuel injector calibration code of the new injector must be programmed to the ECM referring to "ECM registration" in Section 6E3.**
E06	• Short circuit to ground between: Cylinder 2 Injector – Wiring harness connector (wiring harness side) terminal C94-1 & ECM – Wiring harness connector (wiring harness side) terminal C66-49
E07	• Short circuit to voltage between: Cylinder 2 Injector – Wiring harness connector (wiring harness side) terminal C94-1 & ECM – Wiring harness connector (wiring harness side) terminal C66-49 or • Short circuit to voltage between: Cylinder 2 Injector – Wiring harness connector (wiring harness side) terminal C94-2 & ECM – Wiring harness connector (wiring harness side) terminal C66-17

Test Table (For RB413D)

Test	Work Order Description	Nominal Value
T01	Check: Diagnostic Trouble Code stored	
	Is the following Diagnostic Trouble Code stored? P0202 – Injector Circuit Malfunction Cylinder-2	
	Yes: E01	No: T02
T02	Check: Short to Voltage of Signal Circuit	
	• Ignition OFF • Disconnect wiring harness connector from: ECM (Wiring Harness Connector D26) • Ignition ON • Measure voltage between: ECM – Wiring harness connector (wiring harness side) terminal D26-49 & Ground	less than 0.3 V
	Yes: T03	No: E07
T03	Check: Short to Ground of Signal Circuit	
	• Ignition OFF • Measure resistance between: ECM – Wiring harness connector (wiring harness side) terminal D26-49 & Ground	greater than 500 kOhm
	Yes: T04	No: T07
T04	Check: Interruption of Signal Circuit	
	• Disconnect wiring harness connector from: Cylinder 2 Injector • Measure resistance between: ECM – Wiring harness connector (wiring harness side) terminal D26-17 & Cylinder 2 Injector – Wiring harness connector (wiring harness side) terminal D39-2	less than 5 Ohm
	Yes: T05	No: E04
T05	Check: Interruption of Signal Circuit	
	• Measure resistance between: ECM – Wiring harness connector (wiring harness side) terminal D26-49 & Cylinder 2 Injector – Wiring harness connector (wiring harness side) terminal D39-1	less than 5 Ohm
	Yes: T06	No: E03
T06	Check: Component	
	• Measure resistance between: Cylinder 2 Injector – Wiring harness connector (component side) terminal D39-1 & Cylinder 2 Injector – Wiring harness connector (component side) terminal D39-2	less than 3 Ohm
	Yes: E02	No: E01

Test	Work Order Description	Nominal Value
T07	Check: Short to Ground of Signal Circuit	
	• Disconnect wiring harness connector from: Cylinder 2 Injector • Measure resistance between: ECM – Wiring harness connector (wiring harness side) terminal D26-49 & Ground	greater than 500 kOhm
	Yes: E05	No: E06

Result Table (For RB413D)

Result	Cause Of Fault
E01	• Defective component: Cylinder 2 Injector **NOTE:** **If an injector has been replaced, the fuel injector calibration code of the new injector must be programmed to the ECM referring to "ECM registration" in Section 6E3.**
E02	• Defective component: ECM **NOTE:** **If ECM is replaced, register vehicle specification into ECM by performing procedure described in "ECM registration" in Section 6E3.**
E03	• Circuit interruption between: ECM – Wiring harness connector (wiring harness side) terminal D26-49 & Cylinder 2 Injector – Wiring harness connector (wiring harness side) terminal D39-1
E04	• Circuit interruption between: ECM – Wiring harness connector (wiring harness side) terminal D26-17 & Cylinder 2 Injector – Wiring harness connector (wiring harness side) terminal D39-2
E05	• Short circuit to ground between: Cylinder 2 Injector – Wiring harness connector (wiring harness side) terminal D39-2 & ECM – Wiring harness connector (wiring harness side) terminal D26-17 or • Defective component: Cylinder 2 Injector **NOTE:** **If an injector has been replaced, the fuel injector calibration code of the new injector must be programmed to the ECM referring to "ECM registration" in Section 6E3.**
E06	• Short circuit to ground between: Cylinder 2 Injector – Wiring harness connector (wiring harness side) terminal D39-1 & ECM – Wiring harness connector (wiring harness side) terminal D26-49
E07	• Short circuit to voltage between: Cylinder 2 Injector – Wiring harness connector (wiring harness side) terminal D39-1 & ECM – Wiring harness connector (wiring harness side) terminal D26-49 or • Short circuit to voltage between: Cylinder 2 Injector – Wiring harness connector (wiring harness side) terminal D39-2 & ECM – Wiring harness connector (wiring harness side) terminal D26-17

C-26, Cylinder 3 Injector Circuit

Test Table (For RM413D)

Test	Work Order Description	Nominal Value
T01	Check: Diagnostic Trouble Code stored	
	Is the following Diagnostic Trouble Code stored? P0203 – Injector Circuit Malfunction Cylinder-3	
	Yes: E01	No: T02
T02	Check: Short to Voltage of Signal Circuit	
	• Ignition OFF • Disconnect wiring harness connector from: ECM (Wiring Harness Connector C66) • Ignition ON • Measure voltage between: ECM – Wiring harness connector (wiring harness side) terminal C66-48 & Ground	less than 0.3 V
	Yes: T03	No: E07
T03	Check: Short to Ground of Signal Circuit	
	• Ignition OFF • Measure resistance between: ECM – Wiring harness connector (wiring harness side) terminal C66-48 & Ground	greater than 500 kOhm
	Yes: T04	No: T07
T04	Check: Interruption of Signal Circuit	
	• Disconnect wiring harness connector from: Cylinder 3 Injector • Measure resistance between: ECM – Wiring harness connector (wiring harness side) terminal C66-31 & Cylinder 3 Injector – Wiring harness connector (wiring harness side) terminal C95-2	less than 5 Ohm
	Yes: T05	No: E04
T05	Check: Interruption of Signal Circuit	
	• Measure resistance between: ECM – Wiring harness connector (wiring harness side) terminal C66-48 & Cylinder 3 Injector – Wiring harness connector (wiring harness side) terminal C95-1	less than 5 Ohm
	Yes: T06	No: E03
T06	Check: Component	
	• Measure resistance between: Cylinder 3 Injector – Wiring harness connector (component side) terminal C95-1 & Cylinder 3 Injector – Wiring harness connector (component side) terminal C95-2	less than 3 Ohm
	Yes: E02	No: E01

Test	Work Order Description	Nominal Value
T07	Check: Short to Ground of Signal Circuit	
	• Disconnect wiring harness connector from: Cylinder 3 Injector • Measure resistance between: ECM – Wiring harness connector (wiring harness side) terminal C66-48 & Ground	greater than 500 kOhm
	Yes: E05	No: E06

Result Table (RM413D)

Result	Cause Of Fault
E01	• Defective component: Cylinder 3 Injector **NOTE:** **If an injector has been replaced, the fuel injector calibration code of the new injector must be programmed to the ECM referring to "ECM registration" in Section 6E3.**
E02	• Defective component: ECM **NOTE:** **If ECM is replaced, register vehicle specification into ECM by performing procedure described in "ECM registration" in Section 6E3.**
E03	• Circuit interruption between: ECM – Wiring harness connector (wiring harness side) terminal C66-48 & Cylinder 3 Injector – Wiring harness connector (wiring harness side) terminal C95-1
E04	• Circuit interruption between: ECM – Wiring harness connector (wiring harness side) terminal C66-31 & Cylinder 3 Injector – Wiring harness connector (wiring harness side) terminal C95-2
E05	• Short circuit to ground between: Cylinder 3 Injector – Wiring harness connector (wiring harness side) terminal C95-2 & ECM – Wiring harness connector (wiring harness side) terminal C66-31 or • Defective component: Cylinder 3 Injector **NOTE:** **If an injector has been replaced, the fuel injector calibration code of the new injector must be programmed to the ECM referring to "ECM registration" in Section 6E3.**
E06	• Short circuit to ground between: Cylinder 3 Injector – Wiring harness connector (wiring harness side) terminal C95-1 & ECM – Wiring harness connector (wiring harness side) terminal C66-48
E07	• Short circuit to voltage between: Cylinder 3 Injector – Wiring harness connector (wiring harness side) terminal C95-1 & ECM – Wiring harness connector (wiring harness side) terminal C66-48 or • Short circuit to voltage between: Cylinder 3 Injector – Wiring harness connector (wiring harness side) terminal C95-2 & ECM – Wiring harness connector (wiring harness side) terminal C66-31

Test Table (For RB413D)

Test	Work Order Description	Nominal Value
T01	Check: Diagnostic Trouble Code stored	
	Is the following Diagnostic Trouble Code stored? P0203 – Injector Circuit Malfunction Cylinder-3	
	Yes: E01	No: T02
T02	Check: Short to Voltage of Signal Circuit	
	• Ignition OFF • Disconnect wiring harness connector from: ECM (Wiring Harness Connector D26) • Ignition ON • Measure voltage between: ECM – Wiring harness connector (wiring harness side) terminal D26-48 & Ground	less than 0.3 V
	Yes: T03	No: E07
T03	Check: Short to Ground of Signal Circuit	
	• Ignition OFF • Measure resistance between: ECM – Wiring harness connector (wiring harness side) terminal D26-48 & Ground	greater than 500 kOhm
	Yes: T04	No: T07
T04	Check: Interruption of Signal Circuit	
	• Disconnect wiring harness connector from: Cylinder 3 Injector • Measure resistance between: ECM – Wiring harness connector (wiring harness side) terminal D26-31 & Cylinder 3 Injector – Wiring harness connector (wiring harness side) terminal D40-2	less than 5 Ohm
	Yes: T05	No: E04
T05	Check: Interruption of Signal Circuit	
	• Measure resistance between: ECM – Wiring harness connector (wiring harness side) terminal D26-48 & Cylinder 3 Injector – Wiring harness connector (wiring harness side) terminal D40-1	less than 5 Ohm
	Yes: T06	No: E03
T06	Check: Component	
	• Measure resistance between: Cylinder 3 Injector – Wiring harness connector (component side) terminal D40-1 & Cylinder 3 Injector – Wiring harness connector (component side) terminal D40-2	less than 3 Ohm
	Yes: E02	No: E01

Test	Work Order Description	Nominal Value
T07	Check: Short to Ground of Signal Circuit	
	• Disconnect wiring harness connector from: Cylinder 3 Injector • Measure resistance between: ECM – Wiring harness connector (wiring harness side) terminal D26-48 & Ground	greater than 500 kOhm
	Yes: E05	No: E06

Result Table (For RB413D)

Result	Cause Of Fault
E01	• Defective component: Cylinder 3 Injector **NOTE:** **If an injector has been replaced, the fuel injector calibration code of the new injector must be programmed to the ECM referring to "ECM registration" in Section 6E3.**
E02	• Defective component: ECM **NOTE:** **If ECM is replaced, register vehicle specification into ECM by performing procedure described in "ECM registration" in Section 6E3.**
E03	• Circuit interruption between: ECM – Wiring harness connector (wiring harness side) terminal D26-48 & Cylinder 3 Injector – Wiring harness connector (wiring harness side) terminal D40-1
E04	• Circuit interruption between: ECM – Wiring harness connector (wiring harness side) terminal D26-31 & Cylinder 3 Injector – Wiring harness connector (wiring harness side) terminal D40-2
E05	• Short circuit to ground between: Cylinder 3 Injector – Wiring harness connector (wiring harness side) terminal D40-2 & ECM – Wiring harness connector (wiring harness side) terminal D26-31 or • Defective component: Cylinder 3 Injector **NOTE:** **If an injector has been replaced, the fuel injector calibration code of the new injector must be programmed to the ECM referring to "ECM registration" in Section 6E3.**
E06	• Short circuit to ground between: Cylinder 3 Injector – Wiring harness connector (wiring harness side) terminal D40-1 & ECM – Wiring harness connector (wiring harness side) terminal D26-48
E07	• Short circuit to voltage between: Cylinder 3 Injector – Wiring harness connector (wiring harness side) terminal D40-1 & ECM – Wiring harness connector (wiring harness side) terminal D26-48 or • Short circuit to voltage between: Cylinder 3 Injector – Wiring harness connector (wiring harness side) terminal D40-2 & ECM – Wiring harness connector (wiring harness side) terminal D26-31

C-27, Cylinder 4 Injector Circuit

Test Table (For RM413D)

Test	Work Order Description	Nominal Value
T01	Check: Diagnostic Trouble Code stored	
	Is the following Diagnostic Trouble Code stored? P0204 – Injector Circuit Malfunction Cylinder-4	
	Yes: E01	No: T02
T02	Check: Short to Voltage of Signal Circuit	
	• Ignition OFF • Disconnect wiring harness connector from: ECM (Wiring Harness Connector C66) • Ignition ON • Measure voltage between: ECM – Wiring harness connector (wiring harness side) terminal C66-46 & Ground	less than 0.3 V
	Yes: T03	No: E07
T03	Check: Short to Ground of Signal Circuit	
	• Ignition OFF • Measure resistance between: ECM – Wiring harness connector (wiring harness side) terminal C66-46 & Ground	greater than 500 kOhm
	Yes: T04	No: T07
T04	Check: Interruption of Signal Circuit	
	• Disconnect wiring harness connector from: Cylinder 4 Injector • Measure resistance between: ECM – Wiring harness connector (wiring harness side) terminal C66-1 & Cylinder 4 Injector – Wiring harness connector (wiring harness side) terminal C96-2	less than 5 Ohm
	Yes: T05	No: E04
T05	Check: Interruption of Signal Circuit	
	• Measure resistance between: ECM – Wiring harness connector (wiring harness side) terminal C66-46 & Cylinder 4 Injector – Wiring harness connector (wiring harness side) terminal C96-1	less than 5 Ohm
	Yes: T06	No: E03
T06	Check: Component	
	• Measure resistance between: Cylinder 4 Injector – Wiring harness connector (component side) terminal C96-1 & Cylinder 4 Injector – Wiring harness connector (component side) terminal C96-2	less than 3 Ohm
	Yes: E02	No: E01

Test	Work Order Description	Nominal Value
T07	Check: Short to Ground of Signal Circuit	
	• Disconnect wiring harness connector from: Cylinder 4 Injector • Measure resistance between: ECM – Wiring harness connector (wiring harness side) terminal C66-46 & Ground	greater than 500 kOhm
	Yes: E05	No: E06

Result Table (For RM413D)

Result	Cause Of Fault
E01	• Defective component: Cylinder 4 Injector **NOTE:** **If an injector has been replaced, the fuel injector calibration code of the new injector must be programmed to the ECM referring to "ECM registration" in Section 6E3.**
E02	• Defective component: ECM **NOTE:** **If ECM is replaced, register vehicle specification into ECM by performing procedure described in "ECM registration" in Section 6E3.**
E03	• Circuit interruption between: ECM – Wiring harness connector (wiring harness side) terminal C66-46 & Cylinder 4 Injector – Wiring harness connector (wiring harness side) terminal C96-1
E04	• Circuit interruption between: ECM – Wiring harness connector (wiring harness side) terminal C66-1 & Cylinder 4 Injector – Wiring harness connector (wiring harness side) terminal C96-2
E05	• Short circuit to ground between: Cylinder 4 Injector – Wiring harness connector (wiring harness side) terminal C96-2 & ECM – Wiring harness connector (wiring harness side) terminal C66-1 or • Defective component: Cylinder 4 Injector **NOTE:** **If an injector has been replaced, the fuel injector calibration code of the new injector must be programmed to the ECM referring to "ECM registration" in Section 6E3.**
E06	• Short circuit to ground between: Cylinder 4 Injector – Wiring harness connector (wiring harness side) terminal C96-1 & ECM – Wiring harness connector (wiring harness side) terminal C66-46
E07	• Short circuit to voltage between: Cylinder 4 Injector – Wiring harness connector (wiring harness side) terminal C96-1 & ECM – Wiring harness connector (wiring harness side) terminal C66-46 or • Short circuit to voltage between: Cylinder 4 Injector – Wiring harness connector (wiring harness side) terminal C96-2 & ECM – Wiring harness connector (wiring harness side) terminal C66-1

Test Table (For RB413D)

Test	Work Order Description	Nominal Value
T01	Check: Diagnostic Trouble Code stored	
	Is the following Diagnostic Trouble Code stored? P0204 – Injector Circuit Malfunction Cylinder-4	
	Yes: E01	No: T02
T02	Check: Short to Voltage of Signal Circuit	
	• Ignition OFF • Disconnect wiring harness connector from: ECM (Wiring Harness Connector D26) • Ignition ON • Measure voltage between: ECM – Wiring harness connector (wiring harness side) terminal D26-46 & Ground	less than 0.3 V
	Yes: T03	No: E07
T03	Check: Short to Ground of Signal Circuit	
	• Ignition OFF • Measure resistance between: ECM – Wiring harness connector (wiring harness side) terminal D26-46 & Ground	greater than 500 kOhm
	Yes: T04	No: T07
T04	Check: Interruption of Signal Circuit	
	• Disconnect wiring harness connector from: Cylinder 4 Injector • Measure resistance between: ECM – Wiring harness connector (wiring harness side) terminal D26-1 & Cylinder 4 Injector – Wiring harness connector (wiring harness side) terminal D41-2	less than 5 Ohm
	Yes: T05	No: E04
T05	Check: Interruption of Signal Circuit	
	• Measure resistance between: ECM – Wiring harness connector (wiring harness side) terminal D26-46 & Cylinder 4 Injector – Wiring harness connector (wiring harness side) terminal D41-1	less than 5 Ohm
	Yes: T06	No: E03
T06	Check: Component	
	• Measure resistance between: Cylinder 4 Injector – Wiring harness connector (component side) terminal D41-1 & Cylinder 4 Injector – Wiring harness connector (component side) terminal D41-2	less than 3 Ohm
	Yes: E02	No: E01

Test	Work Order Description	Nominal Value
T07	Check: Short to Ground of Signal Circuit	
	• Disconnect wiring harness connector from: Cylinder 4 Injector • Measure resistance between: ECM – Wiring harness connector (wiring harness side) terminal D26-46 & Ground	greater than 500 kOhm
	Yes: E05	No: E06

Result Table (For RB413D)

Result	Cause Of Fault
E01	• Defective component: Cylinder 4 Injector **NOTE:** **If an injector has been replaced, the fuel injector calibration code of the new injector must be programmed to the ECM referring to "ECM registration" in Section 6E3.**
E02	• Defective component: ECM **NOTE:** **If ECM is replaced, register vehicle specification into ECM by performing procedure described in "ECM registration" in Section 6E3.**
E03	• Circuit interruption between: ECM – Wiring harness connector (wiring harness side) terminal D26-46 & Cylinder 4 Injector – Wiring harness connector (wiring harness side) terminal D41-1
E04	• Circuit interruption between: ECM – Wiring harness connector (wiring harness side) terminal D26-1 & Cylinder 4 Injector – Wiring harness connector (wiring harness side) terminal D41-2
E05	• Short circuit to ground between: Cylinder 4 Injector – Wiring harness connector (wiring harness side) terminal D41-2 & ECM – Wiring harness connector (wiring harness side) terminal D26-1 or • Defective component: Cylinder 4 Injector **NOTE:** **If an injector has been replaced, the fuel injector calibration code of the new injector must be programmed to the ECM referring to "ECM registration" in Section 6E3.**
E06	• Short circuit to ground between: Cylinder 4 Injector – Wiring harness connector (wiring harness side) terminal D41-1 & ECM – Wiring harness connector (wiring harness side) terminal D26-46
E07	• Short circuit to voltage between: Cylinder 4 Injector – Wiring harness connector (wiring harness side) terminal D41-1 & ECM – Wiring harness connector (wiring harness side) terminal D26-46 or • Short circuit to voltage between: Cylinder 4 Injector – Wiring harness connector (wiring harness side) terminal D41-2 & ECM – Wiring harness connector (wiring harness side) terminal D26-1

C-28, Exhaust Gas Recirculation Valve Circuit

Test Table (For RM413D)

Test	Work Order Description	Nominal Value
T01	Check: Interruption of Voltage Supply Circuit	
	• Ignition OFF • Disconnect wiring harness connector from: Exhaust Gas Recirculation Valve and ECM (Wiring Harness Connector C66) • Ignition ON • Measure voltage between the following terminals: Exhaust Gas Recirculation Valve – Wiring harness connector (wiring harness side) terminal C70-1 & Ground	greater than 11 V
	Yes: T02	No: T05
T02	Check: Short to Voltage/Ground/Interruption of Signal Circuit	
	• Measure voltage between: Exhaust Gas Recirculation Valve – Wiring harness connector (wiring harness side) terminal C70-5 & Ground	less than 0.3 V
	Yes: T03	No: E04
T03	Check: Short to Ground of Signal Circuit	
	• Ignition OFF • Measure resistance between: Exhaust Gas Recirculation Valve – Wiring harness connector (wiring harness side) terminal C70-5 & Ground	greater than 500 kOhm
	Yes: T04	No: E03
T04	Check: Interruption of Signal Circuit	
	• Measure resistance between: Exhaust Gas Recirculation Valve – Wiring harness connector (wiring harness side) terminal C70-5 & ECM – Wiring harness connector (wiring harness side) terminal C66-15	less than 5 Ohm
	Yes: E01	No: E02
T05	Check: Interruption of Voltage Supply Circuit	
	• Remove electrical component from socket: Circuit Fuse • Check the following component for proper operation: Circuit Fuse	Test okay?
	Yes: T06	No: T07

Test	Work Order Description	Nominal Value
T06	Check: Interruption of Voltage Supply Circuit	
	• Measure voltage between the following terminals: Circuit Fuse – Input contact & Ground	greater than 11 V
	Yes: E05	No: E06
T07	Check: Interruption of Voltage Supply Circuit	
	• Insert new fuse circuit and then check the fuse for proper operation.	Test okay?
	Yes: E07	No: E08

Result Table (For RM413D)

Result	Cause Of Fault
E01	• Defective component: Exhaust Gas Recirculation Valve or ECM **NOTE:** • **The replacement of the components must be done in the listed order. The system must be checked for proper operation after every replacement.** • **If ECM is replaced, register vehicle specification into ECM by performing procedure described in "ECM registration" in Section 6E3.**
E02	• Circuit interruption between: ECM – Wiring harness connector (wiring harness side) terminal C66-15 & Exhaust Gas Recirculation Valve – Wiring harness connector (wiring harness side) terminal C70-5
E03	• Short circuit to ground between: ECM – Wiring harness connector (wiring harness side) terminal C66-15 & Exhaust Gas Recirculation Valve – Wiring harness connector (wiring harness side) terminal C70-5
E04	• Short circuit to voltage between: ECM – Wiring harness connector (wiring harness side) terminal C66-15 & Exhaust Gas Recirculation Valve – Wiring harness connector (wiring harness side) terminal C70-5
E05	• Circuit interruption between: Circuit Fuse – Output contact & Exhaust Gas Recirculation Valve – Wiring harness connector (wiring harness side) terminal C70-1
E06	• Circuit interruption between: Main Relay – Socket Terminal E58-4 & Circuit Fuse – Input contact
E07	• Defective component: Exhaust Gas Recirculation Valve

Result	Cause Of Fault
E08	• Short circuit to ground between: Circuit Fuse – Output contact & Exhaust Gas Recirculation Valve – Wiring harness connector (wiring harness side) terminal C70-1 & ECM – Wiring harness connector (wiring harness side) terminal C66-5 or • Defective component: ECM **NOTE:** **If ECM is replaced, register vehicle specification into ECM by performing procedure described in "ECM registration" in Section 6E3.**

Test Table (For RB413D)

Test	Work Order Description	Nominal Value
T01	Check: Interruption of Voltage Supply Circuit	
	• Ignition OFF • Disconnect wiring harness connector from: Exhaust Gas Recirculation Valve and ECM (Wiring Harness Connector D26) • Ignition ON • Measure voltage between the following terminals: Exhaust Gas Recirculation Valve – Wiring harness connector (wiring harness side) terminal D31-6 & Ground	greater than 11 V
	Yes: T02	No: T05
T02	Check: Short to Voltage/Ground/Interruption of Signal Circuit	
	• Measure voltage between: Exhaust Gas Recirculation Valve – Wiring harness connector (wiring harness side) terminal D31-4 & Ground	less than 0.3 V
	Yes: T03	No: E04
T03	Check: Short to Ground of Signal Circuit	
	• Ignition OFF • Measure resistance between: Exhaust Gas Recirculation Valve – Wiring harness connector (wiring harness side) terminal D31-4 & Ground	greater than 500 kOhm
	Yes: T04	No: E03
T04	Check: Interruption of Signal Circuit	
	• Measure resistance between: Exhaust Gas Recirculation Valve – Wiring harness connector (wiring harness side) terminal D31-4 & ECM – Wiring harness connector (wiring harness side) terminal D26-15	less than 5 Ohm
	Yes: E01	No: E02
T05	Check: Interruption of Voltage Supply Circuit	
	• Remove electrical component from socket: Circuit Fuse • Check the following component for proper operation: Circuit Fuse	Test okay?
	Yes: T06	No: T07
T06	Check: Interruption of Voltage Supply Circuit	
	• Measure voltage between the following terminals: Circuit Fuse – Input contact & Ground	greater than 11 V
	Yes: E05	No: E06

Test	Work Order Description	Nominal Value
T07	Check: Interruption of Voltage Supply Circuit	
	• Insert new fuse circuit and then check the fuse for proper operation.	Test okay?
	Yes: E07	No: E08

Result Table (For RB413D)

Result	Cause Of Fault
E01	• Defective component: Exhaust Gas Recirculation Valve or ECM **NOTE:** • **The replacement of the components must be done in the listed order. The system must be checked for proper operation after every replacement.** • **If ECM is replaced, register vehicle specification into ECM by performing procedure described in "ECM registration" in Section 6E3.**
E02	• Circuit interruption between: ECM – Wiring harness connector (wiring harness side) terminal D26-15 & Exhaust Gas Recirculation Valve – Wiring harness connector (wiring harness side) terminal D31-4
E03	• Short circuit to ground between: ECM – Wiring harness connector (wiring harness side) terminal D26-15 & Exhaust Gas Recirculation Valve – Wiring harness connector (wiring harness side) terminal D31-4
E04	• Short circuit to voltage between: ECM – Wiring harness connector (wiring harness side) terminal D26-15 & Exhaust Gas Recirculation Valve – Wiring harness connector (wiring harness side) terminal D31-4
E05	• Circuit interruption between: Circuit Fuse – Output contact & Exhaust Gas Recirculation Valve – Wiring harness connector (wiring harness side) terminal D31-6
E06	• Circuit interruption between: Main Relay – Socket Terminal E75-4 & Circuit Fuse – Input contact
E07	• Defective component: Exhaust Gas Recirculation Valve

Result	Cause Of Fault
E08	• Short circuit to ground between: Circuit Fuse – Output contact & Exhaust Gas Recirculation Valve – Wiring harness connector (wiring harness side) terminal D31-6 & ECM – Wiring harness connector (wiring harness side) terminal D26-5 or • Defective component: ECM **NOTE:** **If ECM is replaced, register vehicle specification into ECM by performing procedure described in "ECM registration" in Section 6E3.**

C-29, Air Conditioning System Refrigerant Pressure Sensor

Test Table (For RM413D)

Test	Work Order Description	Nominal Value
T01	Check: Short to Voltage of Voltage Supply Circuit	
	• Ignition OFF • Disconnect wiring harness connector from: A/C Pressure Sensor • Ignition ON • Measure voltage between the following terminals: A/C Pressure Sensor – Wiring harness connector (wiring harness side) terminal E26-1 & Ground	4.8 ... 5.2 V
	Yes: T02	No: T06
T02	Check: Short to Voltage of Signal Circuit	
	• Measure voltage between: A/C Pressure Sensor – Wiring harness connector (wiring harness side) terminal E26-1 & A/C Pressure Sensor – Wiring harness connector (wiring harness side) terminal E26-2	4.8 ... 5.2 V
	Yes: T03	No: T05
T03	Check: Short to Voltage of Signal Circuit	
	• Measure voltage between: A/C Pressure Sensor – Wiring harness connector (wiring harness side) terminal E26-3 & Ground	less than 0.3 V
	Yes: T04	No: E03
T04	Check: Short to Ground/Interruption of Signal Circuit	
	• Ignition OFF • Disconnect wiring harness connector from: ECM (Wiring Harness Connector E27) • Measure resistance between: A/C Pressure Sensor – Wiring harness connector (wiring harness side) terminal E26-3 & Ground	greater than 500 kOhm
	Yes: E01	No: E02
T05	Check: Short to Voltage of Signal Circuit	
	• Measure voltage between: A/C Pressure Sensor – Wiring harness connector (wiring harness side) terminal E26-1 & A/C Pressure Sensor – Wiring harness connector (wiring harness side) terminal E26-2	less than 4.8 V
	Yes: E04	No: E05

Test	Work Order Description	Nominal Value
T06	Check: Short to Voltage of Voltage Supply Circuit	
	• Ignition OFF • Disconnect wiring harness connector from: A/C Pressure Sensor • Ignition ON • Measure voltage between the following terminals: A/C Pressure Sensor – Wiring harness connector (wiring harness side) terminal E26-1 & Ground	greater than 5.2 V
	Yes: E06	No: E07

Result Table (For RM413D)

Result	Cause Of Fault
E01	• Circuit interruption between: ECM – Wiring harness connector (wiring harness side) terminal E27-87 & A/C Pressure Sensor – Wiring harness connector (wiring harness side) terminal E26-3 or • Defective component: A/C Pressure Sensor
E02	• Short circuit to ground between: ECM – Wiring harness connector (wiring harness side) terminal E27-87 & A/C Pressure Sensor – Wiring harness connector (wiring harness side) terminal E26-3
E03	• Short circuit to voltage between: ECM – Wiring harness connector (wiring harness side) terminal E27-87 & A/C Pressure Sensor – Wiring harness connector (wiring harness side) terminal E26-3 or • Defective component: ECM **NOTE:** **If ECM is replaced, register vehicle specification into ECM by performing procedure described in "ECM registration" in Section 6E3.**
E04	• Circuit interruption between: ECM – Wiring harness connector (wiring harness side) terminal E27-10 & A/C Pressure Sensor – Wiring harness connector (wiring harness side) terminal E26-2 or • Defective component: ECM **NOTE:** **If ECM is replaced, register vehicle specification into ECM by performing procedure described in "ECM registration" in Section 6E3.**
E05	• Short circuit to voltage between: ECM – Wiring harness connector (wiring harness side) terminal E27-10 & A/C Pressure Sensor – Wiring harness connector (wiring harness side) terminal E26-2 or • Defective component: ECM **NOTE:** **If ECM is replaced, register vehicle specification into ECM by performing procedure described in "ECM registration" in Section 6E3.**

Result	Cause Of Fault
E06	• Short circuit to voltage between: ECM – Wiring harness connector (wiring harness side) terminal E27-37 & A/C Pressure Sensor – Wiring harness connector (wiring harness side) terminal E26-1 or • Defective component: ECM **NOTE:** **If ECM is replaced, register vehicle specification into ECM by performing procedure described in "ECM registration" in Section 6E3.**
E07	• Short circuit to ground/interruption of circuit between: ECM – Wiring harness connector (wiring harness side) terminal E27-37 & A/C Pressure Sensor – Wiring harness connector (wiring harness side) terminal E26-1 or • Defective component: ECM **NOTE:** **If ECM is replaced, register vehicle specification into ECM by performing procedure described in "ECM registration" in Section 6E3.**

Test Table (For RB413D)

Test	Work Order Description	Nominal Value
T01	Check: Short to Voltage of Voltage Supply Circuit	
	• Ignition OFF • Disconnect wiring harness connector from: A/C Pressure Sensor • Ignition ON • Measure voltage between the following terminals: A/C Pressure Sensor – Wiring harness connector (wiring harness side) terminal E66-1 & Ground	4.8 ... 5.2 V
	Yes: T02	No: T06
T02	Check: Short to Voltage of Signal Circuit	
	• Measure voltage between: A/C Pressure Sensor – Wiring harness connector (wiring harness side) terminal E66-1 & A/C Pressure Sensor – Wiring harness connector (wiring harness side) terminal E66-2	4.8 ... 5.2 V
	Yes: T03	No: T05
T03	Check: Short to Voltage of Signal Circuit	
	• Measure voltage between: A/C Pressure Sensor – Wiring harness connector (wiring harness side) terminal E66-3 & Ground	less than 0.3 V
	Yes: T04	No: E03
T04	Check: Short to Ground/Interruption of Signal Circuit	
	• Ignition OFF • Disconnect wiring harness connector from: ECM (Wiring Harness Connector G88) • Measure resistance between: A/C Pressure Sensor – Wiring harness connector (wiring harness side) terminal E66-3 & Ground	greater than 500 kOhm
	Yes: E01	No: E02
T05	Check: Short to Voltage of Signal Circuit	
	• Measure voltage between: A/C Pressure Sensor – Wiring harness connector (wiring harness side) terminal E66-1 & A/C Pressure Sensor – Wiring harness connector (wiring harness side) terminal E66-2	less than 4.8 V
	Yes: E04	No: E05

Test	Work Order Description	Nominal Value
T06	Check: Short to Voltage of Voltage Supply Circuit	
	• Ignition OFF • Disconnect wiring harness connector from: A/C Pressure Sensor • Ignition ON • Measure voltage between the following terminals: A/C Pressure Sensor – Wiring harness connector (wiring harness side) terminal E66-1 & Ground	greater than 5.2 V
	Yes: E06	No: E07

Result Table (For RM413D)

Result	Cause Of Fault
E01	• Circuit interruption between: ECM – Wiring harness connector (wiring harness side) terminal G88-87 & A/C Pressure Sensor – Wiring harness connector (wiring harness side) terminal E66-3 or • Defective component: A/C Pressure Sensor
E02	• Short circuit to ground between: ECM – Wiring harness connector (wiring harness side) terminal G88-87 & A/C Pressure Sensor – Wiring harness connector (wiring harness side) terminal E66-3
E03	• Short circuit to voltage between: ECM – Wiring harness connector (wiring harness side) terminal G88-87 & A/C Pressure Sensor – Wiring harness connector (wiring harness side) terminal E66-3 or • Defective component: ECM **NOTE:** **If ECM is replaced, register vehicle specification into ECM by performing procedure described in "ECM registration" in Section 6E3.**
E04	• Circuit interruption between: ECM – Wiring harness connector (wiring harness side) terminal G88-10 & A/C Pressure Sensor – Wiring harness connector (wiring harness side) terminal E66-2 or • Defective component: ECM **NOTE:** **If ECM is replaced, register vehicle specification into ECM by performing procedure described in "ECM registration" in Section 6E3.**
E05	• Short circuit to voltage between: ECM – Wiring harness connector (wiring harness side) terminal G88-10 & A/C Pressure Sensor – Wiring harness connector (wiring harness side) terminal E66-2 or • Defective component: ECM **NOTE:** **If ECM is replaced, register vehicle specification into ECM by performing procedure described in "ECM registration" in Section 6E3.**

Result	Cause Of Fault
E06	• Short circuit to voltage between: ECM – Wiring harness connector (wiring harness side) terminal G88-37 & A/C Pressure Sensor – Wiring harness connector (wiring harness side) terminal E66-1 or • Defective component: ECM **NOTE:** **If ECM is replaced, register vehicle specification into ECM by performing procedure described in "ECM registration" in Section 6E3.**
E07	• Short circuit to ground/interruption of circuit between: ECM – Wiring harness connector (wiring harness side) terminal G88-37 & A/C Pressure Sensor – Wiring harness connector (wiring harness side) terminal E66-1 or • Defective component: ECM **NOTE:** **If ECM is replaced, register vehicle specification into ECM by performing procedure described in "ECM registration" in Section 6E3.**

C-30, Air Conditioning System Switch Circuit

Test Table (For RM413D)

Test	Work Order Description	Nominal Value
T01	Check: Interruption of Voltage Supply Circuit	
	• Ignition OFF • Disconnect wiring harness from: A/C Switch • Ignition ON • Measure voltage between the following terminals: A/C Switch – Wiring harness connector (wiring harness side) terminal G31-7 & Ground	greater than 11 V
	Yes: T02	No: E01
T02	Check: Interruption of Voltage Supply Circuit	
	• Ignition OFF • Disconnect wiring harness from: A/C Relay • Ignition ON • Measure voltage between the following terminals: A/C Relay – Socket terminal G40-3 & Ground	greater than 11 V
	Yes: T03	No: E02
T03	Check: Interruption of Voltage Supply Circuit	
	• Measure voltage between the following terminals: A/C Relay – Socket terminal G40-4 & Ground	greater than 11 V
	Yes: T04	No: E03
T04	Check: Interruption of Voltage Supply Circuit	
	• Measure voltage between the following terminals: A/C Switch – Wiring harness connector (wiring harness side) terminal G31-6 & Ground	greater than 11 V
	Yes: T05	No: E04

Test	Work Order Description	Nominal Value
T05	Check: Interruption of Signal Circuit	
	• Ignition OFF • Disconnect wiring harness from: ECM • Connect fused jumper wire to: A/C Relay – Socket terminal G40-1 & Ground • Ignition ON • Measure voltage between the following terminals: ECM – Wiring harness connector (wiring harness side) terminal E27-28 & Ground	greater than 11 V
	Yes: T06	No: E05
T06	Check: Short to Voltage of Signal Circuit	
	• Ignition OFF • Remove fused jumper wire • Connect wiring harness connector to: ECM • Scan Tool Data List Parameter A/C Switch	OFF
	Yes: T07	No: E06
T07	Check: Interruption of Signal Circuit	
	• Connect fused jumper wire to: A/C Relay – Wiring harness connector (wiring harness side) terminal G40-4 & A/C Relay – Wiring harness connector (wiring harness side) terminal G40-5 • Scan Tool Data List Parameter A/C Switch	ON
	Yes: T08	No: E06
T08	Check: Short to Ground of Signal Circuit	
	• Ignition OFF • Remove fused jumper wire • Disconnect wiring harness connector from: Heater Blower Fan Switch • Measure resistance between the following terminals: Heater Blower Fan Switch – Wiring harness connector (wiring harness side) terminal G32-5 & Ground	greater than 500 kOhm
	Yes: T09	No: E07

Test	Work Order Description	Nominal Value
T09	Check: Interruption of Signal Circuit	
	• Install electrical component to socket: A/C Relay • Connect wiring harness connector to: A/C Switch • Ignition ON • A/C Switch ON • Measure resistance between the following terminals: Heater Blower Fan Switch – Wiring harness connector (wiring harness side) terminal G32-5 & Ground	greater than 11 V
	Yes: T10	No: E08
T10	Check: Circuit Interruption of Ground Circuit	
	• Measure resistance between the following terminals: Heater Blower Fan Switch – Wiring harness connector (wiring harness side) terminal G32-1 & Ground	less than 5 Ohm
	Yes: E09	No: E10

Result Table (For RM413D)

Result	Cause Of Fault
E01	• Circuit interruption between: Circuit Fuse – Output contact & A/C switch – Wiring harness connector (wiring harness side) terminal G31-7
E02	• Circuit interruption between: Circuit Fuse – Output contact & A/C Relay – Wiring harness connector (wiring harness side) terminal G40-3
E03	• Circuit interruption between Circuit Fuse – Output contact & A/C Relay – Wiring harness connector (wiring harness side) terminal G40-4
E04	• Circuit interruption between: A/C Relay – Wiring harness connector (wiring harness side) terminal G40-1 & A/C Switch – Wiring harness connector (wiring harness side) terminal G31-6 or • Defective component: A/C Relay
E05	• Circuit interruption between: A/C Relay – Wiring harness connector (wiring harness side) terminal G40-5 & ECM – Wiring harness connector (wiring harness side) terminal E27-28 or • Defective component: A/C Relay
E06	• Defective component: ECM **NOTE:** **If ECM is replaced, register vehicle specification into ECM by performing procedure described in "ECM registration" in Section 6E3.**
E07	• Circuit interruption between: A/C Switch – Wiring harness connector (wiring harness side) terminal G31-8 & Heater Blower Fan Switch – Wiring harness connector (wiring harness side) terminal G32-5
E08	• Short circuit to ground between: A/C Switch – Wiring harness connector (wiring harness side) terminal G31-8 & Heater Blower Fan Switch – Wiring harness connector (wiring harness side) terminal G32-5 • Defective component: A/C Switch
E09	• Defective component: Heater Blower Fan Switch
E10	• Circuit interruption between: Heater blower Fan Switch – Wiring harness connector (wiring harness side) terminal G32-1 & Ground

Test Table (For RB413D)

Test	Work Order Description	Nominal Value
T01	Check: Interruption of Voltage Supply Circuit	
	• Ignition OFF • Disconnect wiring harness connector from: A/C Switch • Ignition ON • Measure voltage between the following terminals: A/C Switch – Wiring harness connector (wiring harness side) terminal G31-1 & Ground	greater than 11 V
	Yes: T02	No: E01
T02	Check: Interruption of Signal Circuit	
	• Ignition OFF • Disconnect wiring harness connector from: ECM and Blower Motor Relay • Measure resistance between the following terminals: A/C Switch – Wiring harness connector (wiring harness side) terminal G31-4 & ECM – Wiring harness connector (wiring harness side) terminal G88-28	less than 5 Ohm
	Yes: T03	No: E02
T03	Check: Shorted to Voltage of Signal Circuit	
	• Ignition ON • Measure voltage between the following terminals: ECM – Wiring harness connector (wiring harness side) terminal G88-28 & Ground	less than 0.3 V
	Yes: T04	No: E03
T04	Check: Shorted to Ground	
	• Ignition OFF • Measure resistance between the following terminals: ECM – Wiring harness connector (wiring harness side) terminal G88-28 & Ground	greater than 500 kOhm
	Yes: T05	No: E04
T05	Check: Component	
	• Connect wiring harness connector to: A/C Switch • A/C Switch ON • Ignition ON • Measure voltage between the following terminals: ECM – Wiring harness connector (wiring harness side) terminal G88-28 & Ground	greater than 11 V
	Yes: T06	No: E05

Test	Work Order Description	Nominal Value
T06	Check: Interruption of Signal Circuit	
	• Measure voltage between the following terminals: Blower Motor Relay – Socket terminal G52-5 & Ground	greater than 11 V
	Yes: T07	No: E06
T07	Check: Interruption of Ground Circuit	
	• Ignition OFF • Measure resistance between the following terminals: Blower Motor Relay – Socket terminal G52-3 & Ground	less than 5 Ohm
	Yes: E07	No: E08

Result Table (For RB413D)

Result	Cause Of Fault
E01	• Circuit interruption between: Circuit Fuse – Output contact & A/C Switch – Wiring harness connector (wiring harness side) terminal G31-7
E02	• Circuit interruption between: A/C Switch – Wiring harness connector (wiring harness side) terminal G31-4 & ECM – Wiring harness connector (wiring harness side) terminal G88-28
E03	• Shorted circuit to voltage between: A/C Switch – Wiring harness connector (wiring harness side) terminal G31-4 & ECM – Wiring harness connector (wiring harness side) terminal G88-28 or Blower Motor Relay – Socket terminal G52-5 & ECM – Wiring harness connector (wiring harness side) terminal G88-28
E04	• Shorted circuit to ground between: A/C Switch – Wiring harness connector (wiring harness side) terminal G31-4 & ECM – Wiring harness connector (wiring harness side) terminal G88-28 or Blower Motor Relay – Socket terminal G52-5 & ECM – Wiring harness connector (wiring harness side) terminal G88-28
E05	• Defective component: A/C Switch
E06	• Circuit interruption between: A/C Switch – Wiring harness connector (wiring harness side) terminal G31-4 & Blower Motor Relay – Socket terminal G52-5
E07	• Defective component: Blower Motor Relay or ECM **NOTE:** • **The replacement of the components must be done in the listed order. The system must be checked for proper operation after every replacement.** • **If ECM is replaced, register vehicle specification into ECM by performing procedure described in "ECM registration" in Section 6E3.**
E08	• Circuit interruption between: Blower Motor Relay – Socket terminal G52-3 & Ground

C-31, Air Conditioning System Relay Circuit

Test Table (For RM413D)

Test	Work Order Description	Nominal Value
T01	Check: Short to Ground/Interruption of Voltage Supply Circuit	
	• Ignition OFF • Remove electrical component from socket: Compressor Relay • Measure voltage between the following terminals: Compressor Relay – Socket terminal C51-3 & Ground	greater than 11 V
	Yes: T02	No: T09
T02	Check: Short to Voltage of Voltage Supply Circuit	
	• Ignition ON • Measure voltage between the following terminals: Compressor Relay – Socket terminal C51-4 & Ground	less than 0.3 V
	Yes: T03	No: E08
T03	Check: Short to Ground/Interruption of Voltage Supply Circuit	
	• Measure voltage between the following terminals: Compressor Relay – Socket terminal C51-2 & Ground	greater than 11 V
	Yes: T04	No: E07
T04	Check: Short to Voltage of Signal Circuit	
	• Ignition OFF • Disconnect wiring harness connector from: ECM (Wiring Harness Connector E27) • Ignition ON • Measure voltage between the following terminals: Compressor Relay – Socket terminal C51-1 & Ground	less than 0.3 V
	Yes: T05	No: E06
T05	Check: Short to Ground/Interruption of Signal Circuit	
	• Ignition OFF • Install electrical component to socket: Compressor Relay • Ignition ON • Measure Voltage between the following terminals: ECM – Wiring harness connector (wiring harness side) terminal E27-79 & Ground	greater than 11 V
	Yes: T06	No: E05

Test	Work Order Description	Nominal Value
T06	Check: Short to Ground/Interruption of Voltage Supply Circuit	
	• Ignition OFF • Disconnect wiring harness connector from: A/C Compressor • Connect fused jumper wire to: ECM – Wiring harness connector (wiring harness side) terminal E27-79 & Ground • Ignition ON • Measure voltage between the following terminals A/C Compressor – Wiring harness connector (wiring harness side) terminal C80-2 & Ground	greater than 11 V
	Yes: T07	No: E04
T07	Check: Circuit Interruption of Ground Circuit	
	• Ignition OFF • Remove fused jumper wire • Measure resistance between the following terminals A/C compressor – Wiring harness connector (wiring harness side) terminal C80-1 & Ground	less than 5 Ohm
	Yes: T08	No: E03
T08	Check: Component	
	• Connect wiring harness connector to: A/C Compressor • Connect fused jumper wire to: Compressor Relay – Socket terminal C51-4 & Battery voltage • Clicking noise from following component: A/C Compressor	Test okay?
	Yes: E01	No: T02
T09	Check: Short to Ground/Interruption of Voltage Supply Circuit	
	• Remove electrical component from socket: Circuit Main Fuse • Check the following component for proper operation: Circuit Main Fuse	Test okay?
	Yes: T10	No: T11
T10	Check: Interruption of Voltage Supply Circuit	
	• Measure voltage between the following terminals: Circuit Main Fuse – Input contact & Ground	greater than 11 V
	Yes: E09	No: E10

Test	Work Order Description	Nominal Value
T11	Check: Short to Ground of Voltage Supply Circuit	
	• Connect fused jumper wire to: Compressor Relay – Socket terminal C51-4 & Battery voltage • Check the following component for proper operation: Fuse of the fused jumper wire	Test okay?
	Yes: E11	No: E12

Result Table (For RM413D)

Result	Cause Of Fault
E01	• Defective component: ECM **NOTE:** **If ECM is replaced, register vehicle specification into ECM by performing procedure described in "ECM registration" in Section 6E3.**
E02	• Defective component: A/C Compressor
E03	• Circuit interruption between: A/C Compressor – Wiring harness connector (wiring harness side) terminal C80-1 & Ground
E04	• Circuit interruption between: Compressor Relay – Socket terminal C51-4 & A/C Compressor – Wiring harness connector (wiring harness side) terminal C80-2 or • Defective component: Compressor Relay
E05	• Circuit interruption between: Compressor Relay – Socket terminal C51-1 & ECM – Wiring harness connector (wiring harness side) terminal E27-79 or • Defective component: Compressor Relay
E06	• Short circuit to voltage between: ECM – Wiring harness connector (wiring harness side) terminal E27-79 & Compressor Relay – Socket terminal C51-1
E07	• Circuit interruption between: Circuit Fuse – Output contact & Compressor Relay – Socket terminal C51-2
E08	• Short circuit to voltage between: Compressor Relay – Socket terminal C51-4 & A/C compressor – Wiring harness connector (wiring harness side) terminal C80-2 or • Defective component: A/C compressor
E09	• Circuit interruption between: Circuit Main Fuse – Output contact & Compressor Relay – Socket terminal C51-3

Result	Cause Of Fault
E10	• Circuit interruption between: System Main Fuse – Output contact & Circuit Main Fuse – Input contact
E11	• Short circuit to ground between: Circuit Main Fuse – Output contact & Compressor Relay – Socket terminal C51-3 or • Defective component: Compressor Relay
E12	• Short circuit to ground between: Compressor Relay – Socket terminal C51-4 & A/C compressor – Wiring harness connector (wiring harness side) terminal C80-2 or • Defective component: A/C compressor

Test Table (For RB413D)

Test	Work Order Description	Nominal Value
T01	Check: Short to Ground/Interruption of Voltage Supply Circuit	
	• Ignition OFF • Remove electrical component from socket: Compressor Relay • Measure voltage between the following terminals: Compressor Relay – Socket terminal E55-4 & Ground	greater than 11 V
	Yes: T02	No: T09
T02	Check: Short to Voltage of Voltage Supply Circuit	
	• Ignition ON • Measure voltage between the following terminals: Compressor Relay – Socket terminal E55-3 & Ground	less than 0.3 V
	Yes: T03	No: E08
T03	Check: Short to Ground/Interruption of Voltage Supply Circuit	
	• Measure voltage between the following terminals: Compressor Relay – Socket terminal E55-2 & Ground	greater than 11 V
	Yes: T04	No: E07
T04	Check: Short to Voltage of Signal Circuit	
	• Ignition OFF • Disconnect wiring harness connector from: ECM (Wiring Harness Connector G88) • Ignition ON • Measure voltage between the following terminals: Compressor Relay – Socket terminal E55-1 & Ground	less than 0.3 V
	Yes: T05	No: E06
T05	Check: Short to Ground/Interruption of Signal Circuit	
	• Ignition OFF • Install electrical component to socket: Compressor Relay • Ignition ON • Measure Voltage between the following terminals: ECM – Wiring harness connector (wiring harness side) terminal G88-79 & Ground	greater than 11 V
	Yes: T06	No: E05

Test	Work Order Description	Nominal Value
T06	Check: Short to Ground/Interruption of Voltage Supply Circuit	
	• Ignition OFF • Disconnect wiring harness connector from: A/C Compressor • Connect fused jumper wire to: ECM – Wiring harness connector (wiring harness side) terminal G88-79 & Ground • Ignition ON • Measure voltage between the following terminals A/C Compressor – Wiring harness connector (wiring harness side) terminal D32-1 & Ground	greater than 11 V
	Yes: T07	No: E04
T07	Check: Circuit Interruption of Ground Circuit	
	• Ignition OFF • Remove fused jumper wire • Measure resistance between the following terminals A/C compressor – Wiring harness connector (wiring harness side) terminal D32-2 & Ground	less than 5 Ohm
	Yes: T08	No: E03
T08	Check: Component	
	• Connect wiring harness connector to: A/C Compressor • Connect fused jumper wire to: Compressor Relay – Socket terminal E55-3 & Battery voltage • Clicking noise from following component: A/C Compressor	Test okay?
	Yes: E01	No: T02
T09	Check: Short to Ground/Interruption of Voltage Supply Circuit	
	• Remove electrical component from socket: Circuit Fuse • Check the following component for proper operation: Circuit Fuse	Test okay?
	Yes: T10	No: T11
T10	Check: Interruption of Voltage Supply Circuit	
	• Measure voltage between the following terminals: Circuit Fuse – Input contact & Ground	greater than 11 V
	Yes: E09	No: E10

Test	Work Order Description	Nominal Value
T11	Check: Short to Ground of Voltage Supply Circuit	Test okay?
	• Connect fused jumper wire to: Compressor Relay – Socket terminal E55-3 & Battery voltage • Check the following component for proper operation: Fuse of the fused jumper wire	
	Yes: E11	No: E12

Result Table (For RB413D)

Result	Cause Of Fault
E01	• Defective component: ECM **NOTE:** **If ECM is replaced, register vehicle specification into ECM by performing procedure described in "ECM registration" in Section 6E3.**
E02	• Defective component: A/C Compressor
E03	• Circuit interruption between: A/C Compressor – Wiring harness connector (wiring harness side) terminal D32-2 & Ground
E04	• Circuit interruption between: Compressor Relay – Socket terminal E55-3 & A/C Compressor – Wiring harness connector (wiring harness side) terminal D32-1 or • Defective component: Compressor Relay
E05	• Circuit interruption between: Compressor Relay – Socket terminal E55-1 & ECM – Wiring harness connector (wiring harness side) terminal G88-79 or • Defective component: Compressor Relay
E06	• Short circuit to voltage between: ECM – Wiring harness connector (wiring harness side) terminal G88-79 & Compressor Relay – Socket terminal E55-1
E07	• Circuit interruption between: Circuit Fuse – Output contact & Compressor Relay – Socket terminal E55-2
E08	• Short circuit to voltage between: Compressor Relay – Socket terminal E55-3 & COMPRESSOR – Wiring harness connector (wiring harness side) terminal D32-1 or • Defective component: COMPRESSOR
E09	• Circuit interruption between: Circuit Main Fuse – Output contact & Compressor Relay – Socket terminal E55-4

Result	Cause Of Fault
E10	• Circuit interruption between: System Main Fuse – Output contact & Circuit Main Fuse – Input contact
E11	• Short circuit to ground between: Circuit Main Fuse – Output contact & Compressor Relay – Socket terminal E55-4 or • Defective component: Compressor Relay
E12	• Short circuit to ground between: Compressor Relay – Socket terminal E55-3 & COMPRESSOR – Wiring harness connector (wiring harness side) terminal D32-1 or • Defective component: COMPRESSOR

C-32, Fan Circuit

Test Table (For RM413D)

Test	Work Order Description	Nominal Value
T01	Check: Component	Radiator fan is switched off
	• Ignition ON • Scan Tool MISC Test – Radiator Fan Test Press NO key	
	Yes: T02	No: T11
T02	Check: Component	Is radiator fan running at low speed?
	• Ignition ON • Scan Tool MISC Test – Radiator Fan Test Press YES key	
	Yes: T03	No: T18
T03	Check: Interruption of Signal Circuit	greater than 11 V
	• Ignition OFF • Remove electrical component from socket: Radiator Fan Relay No.1 • Ignition ON • Measure voltage between the following terminals: Radiator Fan Relay No.1 – Socket terminal C52-1 & Ground	
	Yes: T04	No: E01
T04	Check: Interruption of Voltage Supply Circuit	greater than 11 V
	• Measure voltage between the following terminals: Radiator Fan Relay No.1 – Socket terminal C52-3 & Ground	
	Yes: T05	No: E02
T05	Check: Interruption of Signal Circuit	greater than 11 V
	• Ignition OFF • Remove electrical component from socket: Radiator Fan Relay No.3 • Ignition ON • Measure voltage between the following terminals: Radiator Fan Relay No.3 – Socket terminal E60-4 & Ground	
	Yes: T06	No: E03

Test	Work Order Description	Nominal Value
T06	Check: Interruption of Signal Circuit	
	• Ignition OFF • Install electrical component to socket: Radiator Fan Relay No.1 • Disconnect wiring harness connector from: ECM • Ignition ON • Measure voltage between the following terminals: ECM – Wiring harness connector (wiring harness side) terminal E27-8 & Ground	greater than 11 V
	Yes: T07	No: E04
T07	Check: Interruption of Voltage Supply Circuit	
	• Ignition OFF • Disconnect wiring harness connector from: Radiator Fan Motor • Connect fused jumper wire to: ECM – Wiring harness connector (wiring harness side) terminal E27-8 & Ground • Measure voltage between the following terminals: Radiator Fan Motor – Wiring harness connector (wiring harness side) terminal E31-4 & Ground	greater than 11 V
	Yes: T08	No: E05
T08	Check: Interruption of Voltage Supply Circuit	
	• Ignition OFF • Connect wiring harness connector to: Radiator Fan Motor • Ignition ON • Measure voltage between the following terminals: Radiator Fan Relay No.3 – Socket terminal E60-2 & Ground	greater than 11 V
	Yes: T09	No: E06
T09	Check: Interruption of Voltage Supply Circuit	
	• Ignition OFF • Remove fused jumper wire • Remove electrical component from socket: Radiator Fan Relay No.1 • Install electrical component to socket: Radiator Fan Relay No.3 • Ignition ON • Measure voltage between the following terminals: ECM – Wiring harness connector (wiring harness side) terminal E27-8 & Ground	greater than 11V
	Yes: T10	No: E07

Test	Work Order Description	Nominal Value
T10	Check: Circuit Interruption of Ground Circuit	
	• Ignition OFF • Remove electrical component from socket: Radiator Fan Relay No.3 • Measure resistance between the following terminals: Radiator Fan Relay No.3 – Socket terminal E60-1 & Ground	less than 5 Ohm
	Yes: E09	No: E08
T11	Check: Short to Ground of Signal Circuit	
	• Ignition OFF • Remove electrical component from socket: Radiator Fan Relay No.2 • Ignition ON	Radiator cooling fan is switched off
	Yes: T12	No: T14
T12	Check: Short to Ground of Signal Circuit	
	• Ignition OFF • Disconnect wiring harness connector from: ECM • Measure resistance between the following terminals: ECM – Wiring harness connector (wiring harness side) terminal E27-7 & Ground	greater than 500 kOhm
	Yes: T13	No: E10
T13	Check: Component	
	• Disconnect wiring harness connector from: Radiator Fan Motor • Install electrical component to socket: Radiator Fan Relay No.2 • Measure voltage between the following terminals: • Radiator Fan Motor – Wiring harness connector (wiring harness side) terminal E31-2 & Ground	less than 0.3 V
	Yes: E09	No: E11
T14	Check: Short to Voltage of Voltage Supply Circuit	
	• Ignition OFF • Disconnect wiring harness connector from: Radiator Fan Motor • Ignition ON • Measure voltage between the following terminals: Radiator Fan Motor – Wiring harness connector (wiring harness side) terminal E31-2 & Ground	less than 0.3 V
	Yes: T15	No: E13

Test	Work Order Description	Nominal Value
T15	Check: Short to Ground of Signal Circuit	
	• Ignition OFF • Install electrical component to socket: Radiator Fan Relay No.2 • Remove electrical component from socket: Radiator Fan Relay No.1 Ignition ON	Radiator cooling fan is switched off
	Yes: T16	No: E09
T16	Check: Short to Ground of Signal Circuit	
	• Ignition OFF • Remove electrical component from socket: Radiator Fan Relay No.3 • Disconnect wiring harness connector from: ECM • Measure resistance between the following terminals: ECM – Wiring harness connector (wiring harness side) terminal E27-8 & Ground	greater than 500 kOhm
	Yes: T17	No: E14
T17	Check: Component	
	• Install electrical component to socket: Radiator Fan Relay No.1 and No.3 • Ignition ON	Radiator cooling fan is switched off
	Yes: E15	No: E12
T18	Check: Short to Ground/Interruption of Signal Circuit	
	• Ignition OFF • Remove electrical component from socket: Radiator Fan Relay No.2 • Ignition ON • Measure voltage between the following terminals: Radiator Fan Relay No.2 – Socket terminal C62-1 & Ground	greater than 11 V
	Yes: T19	No: E16
T19	Check: Short to Ground/Interruption of Signal Circuit	
	• Measure voltage between the following terminals: Radiator Fan Relay No.2 – Socket terminal C62-3 & Ground	greater than 11 V
	Yes: T20	No: E17
T20	Check: Interruption of Signal Circuit	
	• Ignition OFF • Disconnect wiring harness connector from: ECM • Measure resistance between the following terminals: ECM – Wiring harness connector (wiring harness side) terminal E27-7 & Radiator Fan Relay No.2 – Socket terminal C62-2	less than 5 Ohm
	Yes: T21	No: E18

Test	Work Order Description	Nominal Value
T21	Check: Interruption of Signal Circuit	
	• Disconnect wiring harness connector from: Radiator Fan Motor • Connect fused jumper wire to: Radiator Fan Relay No.2 – Socket terminal C62-3 & Radiator Fan Relay No.2 – Socket terminal C62-4 • Ignition ON • Measure voltage between the following terminals: Radiator Fan Motor – Wiring harness connector (wiring harness side) terminal E31-2 & Ground	greater than 11 V
	Yes: T22	No: E19
T22	Check: Circuit Interruption of Ground Circuit	
	• Ignition OFF • Remove fused jumper wire • Measure resistance between the following terminals: Radiator Fan Motor – Wiring harness connector (wiring harness side) terminal E31-1 & Ground	less than 5 Ohm
	Yes: T23	No: E20
T23	Check: Component	
	• Install electrical component to socket: Radiator Fan Relay No.2 • Ignition ON • Measure voltage between the following terminals: ECM – Wiring harness connector (wiring harness side) terminal E27-7 & Ground	greater than 11 V
	Yes: T24	No: E11
T24	Check: Component	
	• Ignition OFF • Connect fused jumper wire to: ECM – Wiring harness connector (wiring harness side) terminal E27-7 & Ground • Measure voltage between the following terminals: Radiator Fan Motor – Wiring harness connector (wiring harness side) terminal E31-2 & Ground	greater than 11 V
	Yes: T25	No: E11

Test	Work Order Description	Nominal Value
T25	Check: Component	
	• Ignition OFF • Connect wiring harness connector to: Radiator Fan Motor • Connect fused jumper wire to: ECM – Wiring harness connector (wiring harness side) terminal E27-7 & Ground • Ignition ON	Is radiator fan running at low speed?
	Yes: E15	No: E12

Result Table (For RM413D)

Result	Cause of Fault
E01	• Circuit interruption between: Radiator Fan Relay No.1 – Socket terminal C52-1 & Circuit fuse – Output contact
E02	• Circuit interruption between Radiator Fan Relay No.1 – Socket terminal C52-3 & Circuit main fuse – Output contact
E03	• Circuit interruption between Radiator Fan Relay No.3 – Socket terminal E60-4 & Circuit fuse – Output contact
E04	• Circuit interruption between Radiator Fan Relay No.1 – Socket terminal C52-2 & ECM – Wiring harness connector (wiring harness side) terminal E27-8 or • Defective component Radiator Fan Relay No.1
E05	• Circuit interruption between Radiator Fan Relay No.1 – Socket terminal C52-4 & Radiator Fan Motor – Wiring harness connector (wiring harness side) terminal E31-4 or • Defective component Radiator Fan Relay No.1
E06	• Circuit interruption between Radiator Fan Relay No.3 – Socket terminal E60-2 & Radiator fan motor – Wiring harness connector (wiring harness side) terminal E31-3 or • Defective component Radiator Fan Motor
E07	• Circuit interruption between Radiator Fan Relay No.3 – Socket terminal E60-3 & ECM – Wiring harness connector (wiring harness side) terminal E27-8 or • Defective component Radiator Fan Relay No.3
E08	• Circuit interruption between Radiator Fan Relay No.3 – Socket terminal E60-1 & Ground

Result	Cause of Fault
E09	• Defective component: Radiator Fan Motor or ECM **NOTE:** • **The replacement of the components must be done in the listed order. The system must be checked for proper operation after every replacement.** • **If ECM is replaced, register vehicle specification into ECM by performing procedure described in "ECM registration" in Section 6E3.**
E10	• Short circuit to ground between Radiator Fan Relay No.2 – Socket terminal C62-2 & ECM – Wiring harness connector (wiring harness side) terminal E27-7
E11	• Defective component: Radiator Fan Relay No.2
E12	• Defective component: Radiator Fan Motor
E13	• Short circuit to voltage between Radiator Fan Relay No.2 – Socket terminal C62-4 & Radiator Fan Motor – Wiring harness connector (wiring harness side) terminal E31-2
E14	• Short circuit to ground between: Radiator Fan Relay No.1 – Socket terminal C52-2 & ECM – Wiring harness connector (wiring harness side) terminal E27-8 & Radiator Fan Relay No.3 – Socket terminal E60-3
E15	• Defective component: ECM **NOTE:** **If ECM is replaced, register vehicle specification into ECM by performing procedure described in "ECM registration" in Section 6E3.**
E16	• Circuit interruption between Circuit Fuse – Output contact & Radiator Fan Relay No.2 – Socket terminal C62-1 or • Short circuit to ground between Circuit Fuse – Output contact & Radiator Fan Relay No.2 – Socket terminal C62-1 & Radiator Fan Relay No.1 – Socket terminal C52-1 & Radiator Fan Relay No.3 – Socket terminal E60-4 or • Defective component: Circuit Fuse

Result	Cause of Fault
E17	• Circuit interruption between Circuit Main Fuse – Output contact & Radiator Fan Relay No.2 – Socket terminal C62-3 or • Short circuit to ground between Circuit Main Fuse – Output contact & Radiator Fan Relay No.2 – Socket terminal C62-3 & Radiator Fan Relay No.1 – Socket terminal C52-3 • Defective component: Circuit Main Fuse
E18	• Circuit interruption between Radiator Fan Relay No.2 – Socket terminal C62-2 & ECM – Wiring harness connector (wiring harness side) terminal E27-7 • Defective component: Radiator Fan Relay No.2
E19	• Circuit interruption between Radiator Fan Relay No.2 – Socket terminal C62-4 & Radiator Fan Motor – Wiring harness connector (wiring harness side) terminal E31-2
E20	• Circuit interruption between Radiator Fan Motor – Wiring harness connector (wiring harness side) terminal E31-1 & Ground

Test Table (For RB413D)

Test	Work Order Description	Nominal Value
T01	Check: Component	
	• Ignition ON • Scan Tool MISC Test – Radiator Fan Test Press NO key	Radiator fan is switched off
	Yes: T02	No: T11
T02	Check: Component	
	• Ignition ON • Scan Tool MISC Test – Radiator Fan Test Press YES key	Is radiator fan running at low speed?
	Yes: T03	No: T18
T03	Check: Interruption of Signal Circuit	
	• Ignition OFF • Remove electrical component from socket: Radiator Fan Relay No.2 • Measure voltage between the following terminals: Radiator Fan Relay No.2 – Socket terminal E69-2 & Ground	greater than 11 V
	Yes: T04	No: E01
T04	Check: Interruption of Voltage Supply Circuit	
	• Measure voltage between the following terminals: Radiator Fan Relay No.2 – Socket terminal E69-4 & Ground	greater than 11 V
	Yes: T05	No: E02
T05	Check: Interruption of Signal Circuit	
	• Remove electrical component from socket: Radiator Fan Relay No.3 • Measure voltage between the following terminals: Radiator Fan Relay No.3 – Socket terminal E73-4 & Ground	greater than 11 V
	Yes: T06	No: E03
T06	Check: Interruption of Signal Circuit	
	• Install electrical component to socket: Radiator Fan Relay No.2 • Disconnect wiring harness connector from: ECM • Measure voltage between the following terminals: ECM – Wiring harness connector (wiring harness side) terminal G88-8 & Ground	greater than 11 V
	Yes: T07	No: E04

Test	Work Order Description	Nominal Value
T07	Check: Interruption of Voltage Supply Circuit	
	• Disconnect wiring harness connector from: Radiator Fan Motor • Connect fused jumper wire to: ECM – Wiring harness connector (wiring harness side) terminal G88-8 & Ground • Measure voltage between the following terminals: Radiator Fan Motor – Wiring harness connector (wiring harness side) terminal E44-4 & Ground	greater than 11 V
	Yes: T08	No: E05
T08	Check: Interruption of Voltage Supply Circuit	
	• Connect wiring harness connector to: Radiator Fan Motor • Measure voltage between the following terminals: Radiator Fan Relay No.3 – Socket terminal E73-2 & Ground	greater than 11 V
	Yes: T09	No: E06
T09	Check: Interruption of Voltage Supply Circuit	
	• Remove fused jumper wire • Remove electrical component from socket: Radiator Fan Relay No.2 • Install electrical component to socket: Radiator Fan Relay No.3 • Measure voltage between the following terminals: ECM – Wiring harness connector (wiring harness side) terminal G88-8 & Ground	greater than 11V
	Yes: T10	No: E07
T10	Check: Circuit Interruption of Ground Circuit	
	• Remove electrical component from socket: Radiator Fan Relay No.3 • Measure resistance between the following terminals: Radiator Fan Relay No.3 – Socket terminal E73-1 & Ground	less than 5 Ohm
	Yes: E09	No: E08
T11	Check: Short to Ground of Signal Circuit	
	• Ignition OFF • Remove electrical component from socket: Radiator Fan Relay No.1 • Ignition ON	Radiator cooling fan is switched off
	Yes: T12	No: T14

Test	Work Order Description	Nominal Value
T12	Check: Short to Ground of Signal Circuit	
	• Ignition OFF • Disconnect wiring harness connector from: ECM • Measure resistance between the following terminals: ECM – Wiring harness connector (wiring harness side) terminal G88-7 & Ground	greater than 500 kOhm
	Yes: T13	No: E10
T13	Check: Component	
	• Disconnect wiring harness connector from: Radiator Fan Motor • Install electrical component to socket: Radiator Fan Relay No.1 • Measure voltage between the following terminals: Radiator Fan Motor – Wiring harness connector (wiring harness side) terminal E44-2 & Ground	less than 0.3 V
	Yes: E09	No: E11
T14	Check: Short to Voltage of Voltage Supply Circuit	
	• Ignition OFF • Disconnect wiring harness connector from: Radiator Fan Motor • Ignition ON • Measure voltage between the following terminals: Radiator Fan Motor – Wiring harness connector (wiring harness side) terminal E44-2 & Ground	less than 0.3 V
	Yes: T15	No: E13
T15	Check: Short to Ground of Signal Circuit	
	• Ignition OFF • Install electrical component to socket: Radiator Fan Relay No.1 • Remove electrical component from socket: Radiator Fan Relay No.2 Ignition ON	Radiator cooling fan is switched off
	Yes: T16	No: E09
T16	Check: Short to Ground of Signal Circuit	
	• Ignition OFF • Remove electrical component from socket: Radiator Fan Relay No.3 • Disconnect wiring harness connector from: ECM • Measure resistance between the following terminals: ECM – Wiring harness connector (wiring harness side) terminal G88-8 & Ground	greater than 500 kOhm
	Yes: T17	No: E14

Test	Work Order Description	Nominal Value
T17	Check: Component	
	• Install electrical component to socket: Radiator Fan Relay No.2 and No.3 • Ignition ON	Radiator cooling fan is switched off
	Yes: E15	No: E12
T18	Check: Short to Ground/Interruption of Signal Circuit	
	• Ignition OFF • Remove electrical component from socket: Radiator Fan Relay No.1 • Measure voltage between the following terminals: Radiator Fan Relay No.1 – Socket terminal E53-2 & Ground	greater than 11 V
	Yes: T19	No: E16
T19	Check: Short to Ground/Interruption of Signal Circuit	
	• Measure voltage between the following terminals: Radiator Fan Relay No.1 – Socket terminal E53-4 & Ground	greater than 11 V
	Yes: T20	No: E17
T20	Check: Interruption of Signal Circuit	
	• Disconnect wiring harness connector from: ECM • Measure resistance between the following terminals: ECM – Wiring harness connector (wiring harness side) terminal G88-7 & Radiator Fan Relay No.1 – Socket terminal E53-1	less than 5 Ohm
	Yes: T21	No: E18
T21	Check: Interruption of Signal Circuit	
	• Disconnect wiring harness connector from: Radiator Fan Motor • Connect fused jumper wire to: Radiator Fan Relay No.1 – Socket terminal E53-4 & Radiator Fan Relay No.1 – Socket terminal E53-3 • Measure voltage between the following terminals: Radiator Fan Motor – Wiring harness connector (wiring harness side) terminal E44-2 & Ground	greater than 11 V
	Yes: T22	No: E19
T22	Check: Circuit Interruption of Ground Circuit	
	• Remove fused jumper wire • Measure resistance between the following terminals: Radiator Fan Motor – Wiring harness connector (wiring harness side) terminal E44-1 & Ground	less than 5 Ohm
	Yes: T23	No: E20

Test	Work Order Description	Nominal Value
T23	Check: Component	
	• Install electrical component to socket: Radiator Fan Relay No.1 • Measure voltage between the following terminals: ECM – Wiring harness connector (wiring harness side) terminal G88-7 & Ground	greater than 11 V
	Yes: T24	No: E11
T24	Check: Component	
	• Connect fused jumper wire to: ECM – Wiring harness connector (wiring harness side) terminal E27-7 & Ground • Measure voltage between the following terminals: Radiator Fan Motor – Wiring harness connector (wiring harness side) terminal E44-2 & Ground	greater than 11 V
	Yes: T25	No: E11
T25	Check: Component	
	• Connect wiring harness connector to: Radiator Fan Motor • Connect fused jumper wire to: ECM – Wiring harness connector (wiring harness side) terminal G88-7 & Ground • Ignition ON	Is radiator fan running at low speed?
	Yes: E15	No: E12

Result Table (For RB413D)

Result	Cause of Fault
E01	• Circuit interruption between: Radiator Fan Relay No.2 – Socket terminal E69-2 & Circuit Main Fuse – Output contact
E02	• Circuit interruption between Radiator Fan Relay No.2 – Socket terminal E69-4 & Circuit Main Fuse – Output contact
E03	• Circuit interruption between Radiator Fan Relay No.3 – Socket terminal E73-4 & Circuit Main Fuse – Output contact
E04	• Circuit interruption between Radiator Fan Relay No.2 – Socket terminal E69-1 & ECM – Wiring harness connector (wiring harness side) terminal G88-8 or • Defective component Radiator Fan Relay No.2
E05	• Circuit interruption between Radiator Fan Relay No.2 – Socket terminal E69-3 & Radiator Fan Motor – Wiring harness connector (wiring harness side) terminal E44-4 or • Defective component Radiator Fan Relay No.2
E06	• Circuit interruption between Radiator Fan Relay No.3 – Socket terminal E73-2 & • Radiator fan motor – Wiring harness connector (wiring harness side) terminal E44-3 or • Defective component Radiator Fan Motor
E07	• Circuit interruption between Radiator Fan Relay No.3 – Socket terminal E73-3 & ECM – Wiring harness connector (wiring harness side) terminal G88-8 or • Defective component Radiator Fan Relay No.3
E08	• Circuit interruption between Radiator Fan Relay No.3 – Socket terminal E73-1 & Ground

Result	Cause of Fault
E09	• Defective component: Radiator Fan Motor or ECM **NOTE:** • **The replacement of the components must be done in the listed order. The system must be checked for proper operation after every replacement.** • **If ECM is replaced, register vehicle specification into ECM by performing procedure described in "ECM registration" in Section 6E3.**
E10	• Short circuit to ground between Radiator Fan Relay No.1 – Socket terminal E53-1 & ECM – Wiring harness connector (wiring harness side) terminal G88-7
E11	• Defective component: Radiator Fan Relay No.1
E12	• Defective component: Radiator Fan Motor
E13	• Short circuit to voltage between Radiator Fan Relay No.1 – Socket terminal E53-3 & Radiator Fan Motor – Wiring harness connector (wiring harness side) terminal E44-2
E14	• Short circuit to ground between: Radiator Fan Relay No.2 – Socket terminal E69-1 & ECM – Wiring harness connector (wiring harness side) terminal G88-8 & Radiator Fan Relay No.3 – Socket terminal E73-3
E15	• Defective component: ECM **NOTE:** **If ECM is replaced, register vehicle specification into ECM by performing procedure described in "ECM registration" in Section 6E3.**
E16	• Circuit interruption between Circuit Main Fuse – Output contact & Radiator Fan Relay No.1 – Socket terminal E53-2 or • Short circuit to ground between Circuit Main Fuse – Output contact & Radiator Fan Relay No.1 – Socket terminal E53-2 & Radiator Fan Relay No.2 – Socket terminal E69-2 & Radiator Fan Relay No.3 – Socket terminal E73-4 or • Defective component: Circuit Main Fuse

Result	Cause of Fault
E17	• Circuit interruption between Circuit Main Fuse – Output contact & Radiator Fan Relay No.1 – Socket terminal E53-4 or • Short circuit to ground between Circuit Main Fuse – Output contact & Radiator Fan Relay No.1 – Socket terminal E53-4 & Radiator Fan Relay No.2 – Socket terminal E69-4 • Defective component: Circuit Main Fuse
E18	• Circuit interruption between Radiator Fan Relay No.1 – Socket terminal E53-1 & ECM – Wiring harness connector (wiring harness side) terminal G88-7 • Defective component: Radiator Fan Relay No.1
E19	• Circuit interruption between Radiator Fan Relay No.1 – Socket terminal E53-3 Radiator Fan Motor – Wiring harness connector (wiring harness side) terminal E44-2
E20	• Circuit interruption between Radiator Fan Motor – Wiring harness connector (wiring harness side) terminal E44-1 & Ground

C-33, Glow Time Relay Circuit

Test Table (For RM413D)

Test	Work Order Description	Nominal Value
T01	Check: Component	Inspection okay?
	• Check the following component for proper operation: Glow Plug	
	Yes: T02	No: E13
T02	Check: Short to Ground/Interruption of Voltage Supply Circuit	greater than 11 V
	• Ignition OFF • Disconnect wiring harness connector from: Glow Controller • Measure voltage between the following terminals: Glow Controller – Wiring harness connector (wiring harness side) terminal E29-7 & Ground	
	Yes: T03	No: T11
T03	Check: Circuit Interruption of Ground Circuit	greater than 11 V
	• Measure voltage between the following terminals: Glow Controller – Wiring harness connector (wiring harness side) terminal E29-7 & Glow Controller – Wiring harness connector (wiring harness side) terminal E29-6	
	Yes: T04	No: E09
T04	Check: Interruption of Voltage Supply Circuit	greater than 11 V
	• Ignition ON • Measure voltage between the following terminals: Glow Controller – Wiring harness connector (wiring harness side) terminal E29-1 & Ground	
	Yes: T05	No: E08
T05	Check: Short to Voltage of Signal Circuit	ON
	• Data List Parameter Glow Relay	
	Yes: T06	No: E07
T06	Check: Short to Ground/Interruption of Signal Circuit	OFF
	• Ignition OFF • Connect fused jumper wire to: Glow Controller – Wiring harness connector (wiring harness side) terminal E29-3 & Ground • Ignition ON • Data List Parameter Glow Relay	
	Yes: T07	No: E06

Test	Work Order Description	Nominal Value
T07	Check: Interruption of Signal Circuit	
	• Remove fused jumper wire • Scan Tool MISC test: Glow plug control • Press YES key Measure voltage between the following terminals: Glow Controller – Wiring harness connector (wiring harness side) terminal E29-8 & Battery voltage	greater than 11 V
	Yes: T08	No: E05
T08	Check: Short to Voltage of Signal Circuit	
	• Ignition OFF • Disconnect wiring harness connector from: ECM • Measure resistance between the following terminals: Glow Controller – Wiring harness connector (wiring harness side) terminal E29-8 & Ground	greater than 500 kOhm
	Yes: T09	No: E04
T09	Check: Short to Voltage of Signal Circuit	
	• Disconnect wiring harness connector from: Glow Plugs • Ignition ON • Measure voltage between: Glow Plugs – Wiring harness connector (wiring harness side) terminal C97-1, C98-1, C99-1, C100-1 & Ground	less than 0.3 V
	Yes: T10	No: E03
T10	Check: Short to Ground/Interruption of Signal Circuit	
	• Ignition OFF • Measure resistance between the following terminals: Glow Controller – Wiring harness connector (wiring harness side) terminal E29-4, E29-5 & Ground	greater than 500 kOhm
	Yes: E01	No: E02
T11	Check: Component	
	• Remove electrical component from socket: Circuit Main Fuse • Check the following component for proper operation: Circuit Main Fuse	Test okay?
	Yes: T12	No: E12

Test	Work Order Description	Nominal Value
T12	Check: Interruption of Voltage Supply Circuit	
	• Measure voltage between the following terminals: Circuit Main Fuse – Input contact & Ground	greater than 11 V
	Yes: E10	No: E11

Result Table (For RM413D)

Result	Cause Of Fault
E01	• Circuit interruption between: Glow Controller – Wiring harness connector (wiring harness side) terminal E29-4, E29-5 & Glow Plugs – Wiring harness connector (wiring harness side) terminal C97-1, C98-1, C99-1, C100-1 or • Defective component: Glow Controller
E02	• Short circuit to ground between: Glow Controller – Wiring harness connector (wiring harness side) terminal E29-4, E29-5 & Glow Plugs – Wiring harness connector (wiring harness side) terminal C97-1, C98-1, C99-1, C100-1
E03	• Short circuit to voltage between: Glow Controller – Wiring harness connector (wiring harness side) terminal E29-4, E29-5 & Glow Plugs – Wiring harness connector (wiring harness side) terminal C97-1, C98-1, C99-1, C100-1 or • Defective component: Glow Controller
E04	• Short circuit to ground between: ECM – Wiring harness connector (wiring harness side) terminal E27-74 & Glow Controller – Wiring harness connector (wiring harness side) terminal E29-8
E05	• Short circuit to voltage/interruption of circuit between: ECM – Wiring harness connector (wiring harness side) terminal E27-74 & Glow Controller – Wiring harness connector (wiring harness side) terminal E29-8 or • Defective component: ECM **NOTE:** **If ECM is replaced, register vehicle specification into ECM by performing procedure described in “ECM registration” in Section 6E3.**
E06	• Short circuit to voltage/interruption of circuit between: ECM – Wiring harness connector (wiring harness side) terminal E27-70 & Glow Controller – Wiring harness connector (wiring harness side) terminal E29-3 or • Defective component: ECM **NOTE:** **If ECM is replaced, register vehicle specification into ECM by performing procedure described in “ECM registration” in Section 6E3.**

Result	Cause Of Fault
E07	• Short circuit to ground between: ECM – Wiring harness connector (wiring harness side) terminal E27-70 & Glow Controller – Wiring harness connector (wiring harness side) terminal E29-3 or • Defective component: ECM **NOTE:** **If ECM is replaced, register vehicle specification into ECM by performing procedure described in "ECM registration" in Section 6E3.**
E08	• Circuit interruption between: Circuit Fuse – Output contact & Glow Controller – Wiring harness connector (wiring harness side) terminal E29-1
E09	• Circuit interruption between: Glow Controller – Wiring harness connector (wiring harness side) terminal E29-6 & Ground
E10	• Circuit interruption between: Circuit Main Fuse – Output contact & Glow Controller – Wiring harness connector (wiring harness side) terminal E29-7
E11	• Circuit interruption between: Battery positive (+) terminal & Circuit Main Fuse – Input contact
E12	• Short circuit to ground between: Circuit Main Fuse – Output contact & Glow Controller – Wiring harness connector (wiring harness side) terminal E29-7
E13	• Defective component: Glow Plugs

Test Table (For RB413D)

Test	Work Order Description	Nominal Value
T01	Check: Component	Inspection okay?
	• Check the following component for proper operation: Glow Plug	
	Yes: T02	No: E13
T02	Check: Short to Ground/Interruption of Voltage Supply Circuit	greater than 11 V
	• Ignition OFF • Disconnect wiring harness connector from: Glow Controller • Measure voltage between the following terminals: Glow Controller – Wiring harness connector (wiring harness side) terminal E72-7 & Ground	
	Yes: T03	No: T11
T03	Check: Circuit Interruption of Ground Circuit	greater than 11 V
	• Measure voltage between the following terminals: Glow Controller – Wiring harness connector (wiring harness side) terminal E72-7 & Glow Controller – Wiring harness connector (wiring harness side) terminal E72-6	
	Yes: T04	No: E09
T04	Check: Interruption of Voltage Supply Circuit	greater than 11 V
	• Ignition ON • Measure voltage between the following terminals: Glow Controller – Wiring harness connector (wiring harness side) terminal E72-1 & Ground	
	Yes: T05	No: E08
T05	Check: Short to Voltage of Signal Circuit	ON
	• Data List Parameter Glow Relay	
	Yes: T06	No: E07
T06	Check: Short to Ground/Interruption of Signal Circuit	OFF
	• Ignition OFF • Connect fused jumper wire to: Glow Controller – Wiring harness connector (wiring harness side) terminal E72-3 & Ground • Ignition ON • Data List Parameter Glow Relay	
	Yes: T07	No: E06

Test	Work Order Description	Nominal Value
T07	Check: Interruption of Signal Circuit	
	• Remove fused jumper wire • Scan Tool MISC test: Glow plug control • Press YES key ON Measure voltage between the following terminals: Glow Controller – Wiring harness connector (wiring harness side) terminal E72-8 & Battery voltage	greater than 11 V
	Yes: T08	No: E05
T08	Check: Short to Voltage of Signal Circuit	
	• Ignition OFF • Disconnect wiring harness connector from: ECM • Measure resistance between the following terminals: Glow Controller – Wiring harness connector (wiring harness side) terminal E72-8 & Ground	greater than 500 kOhm
	Yes: T09	No: E04
T09	Check: Short to Voltage of Signal Circuit	
	• Disconnect wiring harness connector from: Glow Plugs • Ignition ON • Measure voltage between: Glow Plugs – Wiring harness connector (wiring harness side) terminal D34-1, D35-1, D36-1, D37-1 & Ground	less than 0.3 V
	Yes: T10	No: E03
T10	Check: Short to Ground/Interruption of Signal Circuit	
	• Ignition OFF • Measure resistance between the following terminals: Glow Controller – Wiring harness connector (wiring harness side) terminal E72-4, E72-5 & Ground	greater than 500 kOhm
	Yes: E01	No: E02
T11	Check: Component	
	• Remove electrical component from socket: Circuit Main Fuse • Check the following component for proper operation: Circuit Main Fuse	Test okay?
	Yes: T12	No: E12

Test	Work Order Description	Nominal Value
T12	Check: Interruption of Voltage Supply Circuit	
	• Measure voltage between the following terminals: Circuit Main Fuse – Input contact & Ground	greater than 11 V
	Yes: E10	No: E11

Result Table (For RB413D)

Result	Cause Of Fault
E01	• Circuit interruption between: Glow Controller – Wiring harness connector (wiring harness side) terminal E72-4, E72-5 & Glow Plugs – Wiring harness connector (wiring harness side) terminal D34-1, D35-1, D36-1, D37-1 or • Defective component: Glow Controller
E02	• Short circuit to ground between: Glow Controller – Wiring harness connector (wiring harness side) terminal E72-4, E72-5 & Glow Plugs – Wiring harness connector (wiring harness side) terminal D34-1, D35-1, D36-1, D37-1
E03	• Short circuit to voltage between: Glow Controller – Wiring harness connector (wiring harness side) terminal E72-4, E72-5 & Glow Plugs – Wiring harness connector (wiring harness side) terminal D34-1, D35-1, D36-1, D37-1 or • Defective component: Glow Controller
E04	• Short circuit to ground between: ECM – Wiring harness connector (wiring harness side) terminal G88-74 & Glow Controller – Wiring harness connector (wiring harness side) terminal E72-8
E05	• Short circuit to voltage/interruption of circuit between: ECM – Wiring harness connector (wiring harness side) terminal G88-74 & Glow Controller – Wiring harness connector (wiring harness side) terminal E72-8 or • Defective component: ECM **NOTE:** **If ECM is replaced, register vehicle specification into ECM by performing procedure described in "ECM registration" in Section 6E3.**
E06	• Short circuit to voltage/interruption of circuit between: ECM – Wiring harness connector (wiring harness side) terminal G88-70 & Glow Controller – Wiring harness connector (wiring harness side) terminal E72-3 or • Defective component: ECM **NOTE:** **If ECM is replaced, register vehicle specification into ECM by performing procedure described in "ECM registration" in Section 6E3.**

Result	Cause Of Fault
E07	• Short circuit to ground between: ECM – Wiring harness connector (wiring harness side) terminal G88-70 & Glow Controller – Wiring harness connector (wiring harness side) terminal E72-3 or • Defective component: ECM **NOTE:** **If ECM is replaced, register vehicle specification into ECM by performing procedure described in "ECM registration" in Section 6E3.**
E08	• Circuit interruption between: Circuit Fuse – Output contact & Glow Controller – Wiring harness connector (wiring harness side) terminal E72-1
E09	• Circuit interruption between: Glow Controller – Wiring harness connector (wiring harness side) terminal E72-6 & Ground
E10	• Circuit interruption between: Circuit Main Fuse – Output contact & Glow Controller – Wiring harness connector (wiring harness side) terminal E72-7
E11	• Circuit interruption between: Battery positive (+) terminal & Circuit Main Fuse – Input contact
E12	• Short circuit to ground between: Circuit Main Fuse – Output contact & Glow Controller – Wiring harness connector (wiring harness side) terminal E72-7
E13	• Defective component: Glow Plugs

C-34, Glow Time Telltale Circuit

Test Table (For RM413D)

Test	Work Order Description	Nominal Value
T01	Check: Component	
	• Ignition OFF • Ignition ON • Is at least one of the following indicator ON? – Charge Indicator Lamp – ABS warning Lamp – AIR BAG warning Lamp	Test okay?
	Yes: T02	No: E05
T02	Check: Short to Voltage/Ground/Interruption of Signal Circuit	
	• Ignition OFF • Disconnect wiring harness connector from: ECM (Wiring Harness Connector E27) • Ignition ON • Is the following indicator OFF? Glow indicator Lamp	Test okay?
	Yes: T03	No: E04
T03	Check: Interruption of Signal Circuit	
	• Connect fused jumper wire to: ECM – Wiring harness connector (wiring harness side) terminal E27-52 & Ground • Is the following indicator ON? Glow indicator Lamp	Test okay?
	Yes: T04	No: E03
T04	Check: Short to Voltage of Signal Circuit	
	• Ignition OFF • Remove fused jumper wire • Disconnect wiring harness connector from: Combination Meter • Ignition ON • Measure voltage between the following terminals: Combination Meter – Wiring harness connector (wiring harness side) terminal G22-10 & Ground	less than 0.3 V
	Yes: E01	No: E02

Result Table (For RM413D)

Result	Cause Of Fault
E01	• Defective component: ECM **NOTE:** **If ECM is replaced, register vehicle specification into ECM by performing procedure described in "ECM registration" in Section 6E3.**
E02	• Short circuit to voltage between: ECM – Wiring harness connector (wiring harness side) terminal E27-52 & Combination Meter – Wiring harness connector (wiring harness side) terminal G22-10
E03	• Circuit interruption between: ECM – Wiring harness connector (wiring harness side) terminal E27-52 & Combination Meter – Wiring harness connector (wiring harness side) terminal G22-10 or • Defective component: Combination Meter
E04	• Short circuit to ground between: ECM – Wiring harness connector (wiring harness side) terminal E27-52 & Combination Meter – Wiring harness connector (wiring harness side) terminal E22-10
E05	• Circuit interruption between: Circuit Fuse – Output contact & Combination Meter – Wiring harness connector (wiring harness side) terminal G22-11 or • Defective component: Combination Meter

Test Table (For RB413D)

Test	Work Order Description	Nominal Value
T01	Check: Component	Test okay?
	• Ignition OFF • Ignition ON • Is at least one of the following indicator ON? – Charge Indicator Lamp – ABS warning Lamp – AIR BAG warning Lamp	
	Yes: T02	No: E05
T02	Check: Short to Voltage/Ground/Interruption of Signal Circuit	Test okay?
	• Ignition OFF • Disconnect wiring harness connector from: ECM (Wiring Harness Connector G88) • Ignition ON • Is the following telltale OFF? Glow indicator Lamp	
	Yes: T03	No: E04
T03	Check: Interruption of Signal Circuit	Test okay?
	• Connect fused jumper wire to: ECM – Wiring harness connector (wiring harness side) terminal G88-52 & Ground • Is the following telltale ON? Glow indicator Lamp	
	Yes: T04	No: E03
T04	Check: Short to Voltage of Signal Circuit	less than 0.3 V
	• Ignition OFF • Remove fused jumper wire • Disconnect wiring harness connector from: Combination Meter • Ignition ON • Measure voltage between the following terminals: Combination Meter – Wiring harness connector (wiring harness side) terminal G25-5 & Ground	
	Yes: E01	No: E02

Result Table (For RB413D)

Result	Cause Of Fault
E01	• Defective component: ECM **NOTE:** **If ECM is replaced, register vehicle specification into ECM by performing procedure described in "ECM registration" in Section 6E3.**
E02	• Short circuit to voltage between: ECM – Wiring harness connector (wiring harness side) terminal G88-52 & Combination Meter – Wiring harness connector (wiring harness side) terminal G25-5
E03	• Circuit interruption between: ECM – Wiring harness connector (wiring harness side) terminal G88-52 & Combination Meter – Wiring harness connector (wiring harness side) terminal G25-5 or • Defective component: Combination Meter
E04	• Short circuit to ground between: ECM – Wiring harness connector (wiring harness side) terminal G88-52 & Combination Meter – Wiring harness connector (wiring harness side) terminal E25-5
E05	• Circuit interruption between: Circuit Fuse – Output contact & Combination Meter – Wiring harness connector (wiring harness side) terminal G25-15 or • Defective component: Combination Meter

C-35, Filterheating Circuit

Test Table (For RM413D)

Test	Work Order Description	Nominal Value
T01	Check: Short to Ground/Interruption of Voltage Supply Circuit	
	• Ignition OFF • Remove electrical component from socket: Fuel Heating Relay • Measure voltage between: Fuel Heating Relay – Socket Terminal E59-2 & Ground	greater than 11 V
	Yes: T02	No: T12
T02	Check: Interruption of Voltage Supply Circuit	
	• Ignition ON • Measure voltage between: Fuel Heating Relay – Socket Terminal E59-4 & Ground	greater than 11 V
	Yes: T03	No: E09
T03	Check: Short to Voltage of Voltage Supply Circuit	
	• Measure voltage between: Fuel Heating Relay – Socket Terminal E59-5 & Ground	less than 0.3 V
	Yes: T04	No: T11
T04	Check: Short to Voltage of Signal Circuit	
	• Ignition OFF • Disconnect wiring harness connector from: ECM (Wiring Harness Connector E27) • Ignition ON • Measure voltage between: Fuel Heating Relay – Socket Terminal E59-1 & Ground	less than 0.3 V
	Yes: T05	No: E07
T05	Check: Short to Ground of Signal Circuit	
	• Ignition OFF • Measure resistance between: Fuel Heating Relay – Socket Terminal E59-1 & Ground	greater than 500 kOhm
	Yes: T06	No: E06
T06	Check: Interruption of Signal Circuit	
	• Measure resistance between: ECM – Wiring harness connector (wiring harness side) terminal E27-76 & Fuel Heating Relay – Socket Terminal E59-1	less than 5 Ohm
	Yes: T07	No: E05

Test	Work Order Description	Nominal Value
T07	Check: Interruption of Voltage Supply Circuit	
	• Disconnect wiring harness connector from: Fuel Heater and Temperature Sensor • Connect fused jumper wire to: Fuel Heating Relay – Socket Terminal E59-2 & Fuel Heating Relay – Socket Terminal E59-5 • Measure voltage between: Fuel Heater and Temperature Sensor – Wiring harness connector (wiring harness side) terminal E50-2 & Ground	greater than 11 V
	Yes: T08	No: E04
T08	Check: Circuit Interruption of Ground Circuit	
	• Measure voltage between: Fuel Heater and Temperature Sensor – Wiring harness connector (wiring harness side) terminal E50-2 & Fuel Heater and Temperature Sensor – Wiring harness connector (wiring harness side) terminal E50-1	greater than 11 V
	Yes: T09	No: E03
T09	Check: Component	
	• Ignition OFF • Insert electrical component in socket: Fuel Heating Relay • Ignition ON • Measure voltage between the following terminals ECM – Wiring harness connector (wiring harness side) terminal E27-76 & Ground	greater than 11 V
	Yes: T10	No: E02
T10	Check: Component	
	• Ignition OFF • Connect fused jumper wire to: ECM – Wiring harness connector (wiring harness side) terminal E27-76 & Ground • Ignition ON • Measure voltage between the following terminals Fuel Heater and Temperature Sensor – Wiring harness connector (wiring harness side) terminal E50-2 & Ground	greater than 11 V
	Yes: E01	No: E02

Test	Work Order Description	Nominal Value
T11	Check: Short to Voltage of Voltage Supply Circuit	
	• Ignition OFF • Disconnect wiring harness connector from: Fuel Heater and Temperature Sensor • Ignition ON • Measure voltage between: Fuel Heating Relay – Socket Terminal E59-5 & Ground	less than 0.3 V
	Yes: E01	No: E08
T12	Check: Short to Ground/Interruption of Voltage Supply Circuit	
	• Remove electrical component from socket: Circuit Main Fuse • Check the following component for proper operation: Circuit Main Fuse	Test okay?
	Yes: T13	No: T14
T13	Check: Interruption of Voltage Supply Circuit	
	• Measure voltage between: Circuit Main Fuse – Input contact & Ground	greater than 11 V
	Yes: E10	No: E11
T14	Check: Short to Ground of Voltage Supply Circuit	
	• Insert new fuse and then check the fuse for proper operation.	Test okay?
	Yes: T15	No: E13
T15	Check: Short to Ground of Voltage Supply Circuit	
	• Measure voltage between: Fuel Heating Relay – Socket Terminal E59-5 & Battery voltage	less than 0.3 V
	Yes: E02	No: E12

Result Table (For RM413D)

Result	Cause Of Fault
E01	• Defective component: Fuel Heater and Temperature Sensor or ECM **NOTE:** • **The replacement of the components must be done in the listed order: The system must be checked for proper operation after every replacement.** • **If ECM is replaced, register vehicle specification into ECM by performing procedure described in "ECM registration" in Section 6E3.**
E02	• Defective component: Fuel Heating Relay
E03	• Circuit interruption between: Fuel Heater and Temperature Sensor – Wiring harness connector (wiring harness side) terminal E50-1 & Ground
E04	• Circuit interruption between: Fuel Heating Relay – Socket Terminal E59-5 & Fuel Heater and Temperature Sensor – Wiring harness connector (wiring harness side) terminal E50-2
E05	• Circuit interruption between: ECM – Wiring harness connector (wiring harness side) terminal E27-76 & Fuel Heating Relay – Socket Terminal E59-1
E06	• Short circuit to ground between: ECM – Wiring harness connector (wiring harness side) terminal E27-76 & Fuel Heating Relay – Socket Terminal E59-1
E07	• Short circuit to voltage between: ECM – Wiring harness connector (wiring harness side) terminal E27-76 & Fuel Heating Relay – Socket Terminal E59-1
E08	• Short circuit to voltage between: Fuel Heating Relay – Socket Terminal E59-5 & Fuel Heater and Temperature Sensor – Wiring harness connector (wiring harness side) terminal E50-2
E09	• Circuit interruption between: Circuit Fuse – Output contact & Fuel Heating Relay – Socket Terminal E59-4
E10	• Circuit interruption between: Circuit Main Fuse – Output contact & fuel Heating Relay – Socket Terminal E59-2

E11	• Circuit interruption between: System Main Fuse – Output contact & Circuit Main Fuse – Input contact
E12	• Short circuit to ground between: Fuel Heating Relay – Socket Terminal E59-5 & Fuel Heater and Temperature Sensor – Wiring harness connector (wiring harness side) terminal E50-2 or • Defective component: Fuel Heater and Temperature Sensor
E13	• Short circuit to ground between: Circuit Main Fuse – Output contact & Fuel Heating Relay – Socket Terminal E59-2

Test Table (For RB413D)

Test	Work Order Description	Nominal Value
T01	Check: Short to Ground/Interruption of Voltage Supply Circuit	
	• Ignition OFF • Remove electrical component from socket: Fuel Heating Relay • Measure voltage between the following terminals: Fuel Heating Relay – Socket Terminal E74-2 & Ground	greater than 11 V
	Yes: T02	No: T12
T02	Check: Interruption of Voltage Supply Circuit	
	• Ignition ON • Measure voltage between the following terminals: Fuel Heating Relay – Socket Terminal E74-4 & Ground	greater than 11 V
	Yes: T03	No: E09
T03	Check: Short to Voltage of Voltage Supply Circuit	
	• Measure voltage between the following terminals: Fuel Heating Relay – Socket Terminal E74-5 & Ground	less than 0.3 V
	Yes: T04	No: T11
T04	Check: Short to Voltage of Signal Circuit	
	• Ignition OFF • Disconnect wiring harness connector from: ECM (Wiring Harness Connector G88) • Ignition ON • Measure voltage between the following terminals: Fuel Heating Relay – Socket Terminal E74-1 & Ground	less than 0.3 V
	Yes: T05	No: E07
T05	Check: Short to Ground of Signal Circuit	
	• Ignition OFF • Measure resistance between the following terminals: Fuel Heating Relay – Socket Terminal E74-1 & Ground	greater than 500 kOhm
	Yes: T06	No: E06
T06	Check: Interruption of Signal Circuit	
	• Measure resistance between the following terminals: ECM – Wiring harness connector (wiring harness side) terminal G88-76 & Fuel Heating Relay – Socket Terminal E74-1	less than 5 Ohm
	Yes: T07	No: E05

Test	Work Order Description	Nominal Value
T07	Check: Interruption of Voltage Supply Circuit	
	• Disconnect wiring harness connector from: Fuel Heater and Temperature Sensor • Connect fused jumper wire to: Fuel Heating Relay – Socket Terminal E74-2 & Fuel Heating Relay – Socket Terminal E74-5 • Measure voltage between the following terminals: Fuel Heater and Temperature Sensor – Wiring harness connector (wiring harness side) terminal E67-2 & Ground	greater than 11 V
	Yes: T08	No: E04
T08	Check: Circuit Interruption of Ground Circuit	
	• Measure voltage between the following terminals: Fuel Heater and Temperature Sensor – Wiring harness connector (wiring harness side) terminal E67-2 & Fuel Heater and Temperature Sensor – Wiring harness connector (wiring harness side) terminal E67-1	greater than 11 V
	Yes: T09	No: E03
T09	Check: Component	
	• Ignition OFF • Insert electrical component in socket: Fuel Heating Relay • Ignition ON • Measure voltage between the following terminals: ECM – Wiring harness connector (wiring harness side) terminal G88-76 & Ground	greater than 11 V
	Yes: T10	No: E02
T10	Check: Component	
	• Ignition OFF • Connect fused jumper wire to: ECM – Wiring harness connector (wiring harness side) terminal G88-76 & Ground • Ignition ON • Measure voltage between the following terminals Fuel Heater and Temperature Sensor – Wiring harness connector (wiring harness side) terminal E67-2 & Ground	greater than 11 V
	Yes: E01	No: E02

Test	Work Order Description	Nominal Value
T11	Check: Short to Voltage of Voltage Supply Circuit	
	• Ignition OFF • Disconnect wiring harness connector from: Fuel Heater and Temperature Sensor • Ignition ON • Measure voltage between the following terminals: Fuel Heating Relay – Socket Terminal E74-5 & Ground	less than 0.3 V
	Yes: E01	No: E08
T12	Check: Short to Ground/Interruption of Voltage Supply Circuit	
	• Remove electrical component from socket: Circuit Main Fuse • Check the following component for proper operation: Circuit Main Fuse	Test okay?
	Yes: T13	No: T14
T13	Check: Interruption of Voltage Supply Circuit	
	• Measure voltage between the following terminals: Circuit Main Fuse – Input contact & Ground	greater than 11 V
	Yes: E10	No: E11
T14	Check: Short to Ground of Voltage Supply Circuit	
	• Insert new fuse and then check the fuse for proper operation.	Test okay?
	Yes: T15	No: E13
T15	Check: Short to Ground of Voltage Supply Circuit	
	• Measure voltage between the following terminals: Fuel Heating Relay – Socket Terminal E74-5 & Battery voltage	less than 0.3 V
	Yes: E02	No: E12

Result Table (For RB413D)

Result	Cause Of Fault
E01	• Defective component: Fuel Heater and Temperature Sensor or ECM **NOTE:** • **The replacement of the components must be done in the listed order. The system must be checked for proper operation after every replacement.** • **If ECM is replaced, register vehicle specification into ECM by performing procedure described in "ECM registration" in Section 6E3.**
E02	• Defective component: Fuel Heating Relay
E03	• Circuit interruption between: Fuel Heater and Temperature Sensor – Wiring harness connector (wiring harness side) terminal E67-1 & Ground
E04	• Circuit interruption between: Fuel Heating Relay – Socket Terminal E74-5 & Fuel Heater and Temperature Sensor – Wiring harness connector (wiring harness side) terminal E67-2
E05	• Circuit interruption between: ECM – Wiring harness connector (wiring harness side) terminal G88-76 & Fuel Heating Relay – Socket Terminal E74-1
E06	• Short circuit to ground between: ECM – Wiring harness connector (wiring harness side) terminal G88-76 & Fuel Heating Relay – Socket Terminal E74-1
E07	• Short circuit to voltage between: ECM – Wiring harness connector (wiring harness side) terminal G88-76 & Fuel Heating Relay – Socket Terminal E74-1
E08	• Short circuit to voltage between: Fuel Heating Relay – Socket Terminal E74-5 & Fuel Heater and Temperature Sensor – Wiring harness connector (wiring harness side) terminal E67-2
E09	• Circuit interruption between: Circuit Fuse – Output contact & Fuel Heating Relay – Socket Terminal E74-4
E10	• Circuit interruption between: Circuit Main Fuse – Output contact & Fuel Heating Relay – Socket Terminal E74-2

E11	• Circuit interruption between: System Main Fuse – Output contact & Circuit Main Fuse – Input contact
E12	• Short circuit to ground between: Fuel Heating Relay – Socket Terminal E74-5 & Fuel Heater and Temperature Sensor – Wiring harness connector (wiring harness side) terminal E67-2 or • Defective component: Fuel Heater and Temperature Sensor
E13	• Short circuit to ground between: Circuit Main Fuse – Output contact & Fuel Heating Relay – Socket Terminal E74-2

C-36, Malfunction Indication Lamp (MIL) Circuit

Test Table (For RM413D)

Test	Work Order Description	Nominal Value
T01	Check: Component	
	• Ignition OFF • Ignition ON • Is at least one of the following indicator ON? Charge Indicator Lamp ABS Warning Lamp Air Bag Warning Lamp	Test okay?
	Yes: T02	No: E05
T02	Check: Short to Voltage/Ground/Interruption of Signal Circuit	
	• Ignition OFF • Disconnect wiring harness connector from: ECM (Wiring Harness Connector E27) • Ignition ON • Is the following indicator OFF? Malfunction Indicator Lamp	Test okay?
	Yes: T03	No: T05
T03	Check: Interruption of Signal Circuit	
	• Connect fused jumper wire to: ECM – Wiring harness connector (wiring harness side) terminal E27-78 & Ground • Is the following indicator ON? Malfunction Indicator Lamp	Test okay?
	Yes: T04	No: E03
T04	Check: Short to Voltage of Signal Circuit	
	• Ignition OFF • Remove fused jumper wire • Disconnect wiring harness connector from: Combination meter • Ignition ON • Measure voltage between the following terminals: Combination meter – Wiring harness connector (wiring harness side) terminal G22-19 & Ground	less than 0.3 V
	Yes: E01	No: E02
T05	Check: Component	
	• Ignition OFF • Disconnect wiring harness connector from: Combination meter • Measure resistance between: ECM – Wiring harness connector (wiring harness side) terminal E27-78 & Ground	greater than 500 kOhm
	Yes: E01	No: E04

Result Table (For RM413D)

Result	Cause Of Fault
E01	• Defective component: ECM **NOTE:** **If ECM is replaced, register vehicle specification into ECM by performing procedure described in "ECM registration" in Section 6E3.**
E02	• Short circuit to voltage between: ECM – Wiring harness connector (wiring harness side) terminal E27-78 & Combination Meter – Wiring harness connector (wiring harness side) terminal G22-19
E03	• Circuit interruption between: ECM – Wiring harness connector (wiring harness side) terminal E27-78 & Combination Meter – Wiring harness connector (wiring harness side) terminal G22-19 or • Defective component: Combination Meter
E04	• Short circuit to ground between: ECM – Wiring harness connector (wiring harness side) terminal E27-78 & Combination Meter – Wiring harness connector (wiring harness side) terminal G22-19 or • Defective component: Combination Meter
E05	• Circuit interruption between: Circuit Fuse – Output contact & Combination Meter – Wiring harness connector (wiring harness side) terminal G22-11 or • Defective component: Combination Meter

Test Table (For RB413D)

Test	Work Order Description	Nominal Value
T01	Check: Component	
	• Ignition OFF • Ignition ON • Is at least one of the following indicator ON? – Charge Indicator Lamp – ABS Warning Lamp – Air Bag Warning Lamp	Test okay?
	Yes: T02	No: E05
T02	Check: Short to Voltage/Ground/Interruption of Signal Circuit	
	• Ignition OFF • Disconnect wiring harness connector from: ECM (Wiring Harness Connector G88) • Ignition ON • Is the following indicator OFF? Malfunction Indicator Lamp	Test okay?
	Yes: T03	No: T05
T03	Check: Interruption of Signal Circuit	
	• Connect fused jumper wire to: ECM – Wiring harness connector (wiring harness side) terminal G88-78 & Ground • Is the following indicator ON? Malfunction Indicator Lamp	Test okay?
	Yes: T04	No: E03
T04	Check: Short to Voltage of Signal Circuit	
	• Ignition OFF • Remove fused jumper wire • Disconnect wiring harness connector from: Combination meter • Ignition ON • Measure voltage between the following terminals: Combination meter – Wiring harness connector (wiring harness side) terminal G25-23 & Ground	less than 0.3 V
	Yes: E01	No: E02
T05	Check: Component	
	• Ignition OFF • Disconnect wiring harness connector from: Combination meter • Measure resistance between the following terminals: ECM – Wiring harness connector (wiring harness side) terminal G88-78 & Ground	greater than 500 kOhm
	Yes: E01	No: E04

Result Table (For RB413D)

Result	Cause Of Fault
E01	• Defective component: ECM **NOTE:** **If ECM is replaced, register vehicle specification into ECM by performing procedure described in "ECM registration" in Section 6E3.**
E02	• Short circuit to voltage between: ECM – Wiring harness connector (wiring harness side) terminal G88-78 & Combination Meter – Wiring harness connector (wiring harness side) terminal G25-23
E03	• Circuit interruption between: ECM – Wiring harness connector (wiring harness side) terminal G88-78 & Combination Meter – Wiring harness connector (wiring harness side) terminal G25-23 or • Defective component: Combination Meter
E04	• Short circuit to ground between: ECM – Wiring harness connector (wiring harness side) terminal G88-78 & Combination Meter – Wiring harness connector (wiring harness side) terminal G25-23 or • Defective component: Combination Meter
E05	• Circuit interruption between: Circuit Fuse – Output contact & Combination Meter – Wiring harness connector (wiring harness side) terminal G25-15 or • Defective component: Combination Meter

C-37, Service Telltale Circuit

Test Table (For RM413D)

Test	Work Order Description	Nominal Value
T01	Check: Component	
	• Ignition OFF • Ignition ON • Is at least one of the following indicators ON? – Charge Indicator Lamp – ABS Warning Lamp – Air Bag Warning Lamp	Test okay?
	Yes: T02	No: E04
T02	Check: Short to Voltage/Ground/Interruption of Signal Circuit	
	• Ignition OFF • Disconnect wiring harness connector from: ECM (Wiring Harness Connector E27) • Ignition ON • Is the following indicator OFF? SVS Lamp	Test okay?
	Yes: T03	No: E03
T03	Check: Interruption of Signal Circuit	
	• Connect fused jumper wire to: ECM – Wiring harness connector (wiring harness side) terminal E27-77 & Ground • Is the following indicator ON? SVS Lamp	Test okay?
	Yes: E01	No: E02

Result Table (RM413D)

Result	Cause Of Fault
E01	• Short circuit to voltage between: ECM – Wiring harness connector (wiring harness side) terminal E27-77 & Combination Meter – Wiring harness connector (wiring harness side) terminal G22-21 or • Defective component: ECM **NOTE:** **If ECM is replaced, register vehicle specification into ECM by performing procedure described in "ECM registration" in Section 6E3.**
E02	• Circuit interruption between: ECM – Wiring harness connector (wiring harness side) terminal E27-77 & Combination Meter – Wiring harness connector (wiring harness side) terminal G22-21 or • Defective component: Combination Meter
E03	• Short circuit to ground between: ECM – Wiring harness connector (wiring harness side) terminal E27-77 & Combination Meter – Wiring harness connector (wiring harness side) terminal G22-21 or • Defective component: Combination Meter
E04	• Circuit interruption between: Circuit Fuse – Output contact & Combination Meter – Wiring harness connector (wiring harness side) terminal G22-11 or • Defective component: Combination Meter

Test Table (For RB413D)

Test	Work Order Description	Nominal Value
T01	Check: Component	Test okay?
	• Ignition OFF • Ignition ON • Is at least one of the following indicators ON? – Charge Indicator Lamp – ABS Warning Lamp – Air Bag Warning Lamp	
	Yes: T02	No: E04
T02	Check: Short to Voltage/Ground/Interruption of Signal Circuit	Test okay?
	• Ignition OFF • Disconnect wiring harness connector from: ECM (Wiring Harness Connector G88) • Ignition ON • Is the following indicator OFF? SVS Lamp	
	Yes: T03	No: E03
T03	Check: Interruption of Signal Circuit	Test okay?
	• Connect fused jumper wire to: ECM – Wiring harness connector (wiring harness side) terminal G88-77 & Ground • Is the following indicator ON? SVS Lamp	
	Yes: E01	No: E02

Result Table (RB413D)

Result	Cause Of Fault
E01	• Short circuit to voltage between: ECM – Wiring harness connector (wiring harness side) terminal G88-77 & Combination Meter – Wiring harness connector (wiring harness side) terminal G25-8 or • Defective component: ECM **NOTE:** **If ECM is replaced, register vehicle specification into ECM by performing procedure described in "ECM registration" in Section 6E3.**
E02	• Circuit interruption between: ECM – Wiring harness connector (wiring harness side) terminal G88-77 & Combination Meter – Wiring harness connector (wiring harness side) terminal G25-8 or • Defective component: Combination Meter
E03	• Short circuit to ground between: ECM – Wiring harness connector (wiring harness side) terminal G88-77 & Combination Meter – Wiring harness connector (wiring harness side) terminal G25-8 or • Defective component: Combination Meter
E04	• Circuit interruption between: Circuit Fuse – Output contact & Combination Meter – Wiring harness connector (wiring harness side) terminal G25-15 or • Defective component: Combination Meter

C-38, Oil Level Telltale Circuit

NOTE:

The following test table is applied only for vehicle with wire harness for low engine oil level warning light.

Test Table (For RM413D)

Test	Work Order Description	Nominal Value
T01	Check: Component	Test okay?
	• Ignition OFF • Ignition ON • Is at least one of the following indicators ON? – Charge Indicator Lamp – ABS Warning Lamp – Air Bag Warning Lamp	
	Yes: T02	No: E04
T02	Check: Short to Voltage/Ground/Interruption of Signal Circuit	Test okay?
	• Ignition OFF • Disconnect wiring harness connector from: ECM (Wiring Harness Connector E27) • Ignition ON • Is the following indicator OFF? Oil Level Warning Lamp	
	Yes: T03	No: E03
T03	Check: Interruption of Signal Circuit	Test okay?
	• Connect fused jumper wire to: ECM – Wiring harness connector (wiring harness side) terminal E27-51 & Ground • Is the following indicator ON? Oil Level Warning Lamp	
	Yes: E01	No: E02

Result Table (For RM413D)

Result	Cause Of Fault
E01	• Short circuit to voltage between: ECM – Wiring harness connector (wiring harness side) terminal E27-51 & Combination Meter – Wiring harness connector (wiring harness side) terminal G22-20 or • Defective component: ECM **NOTE:** **If ECM is replaced, register vehicle specification into ECM by performing procedure described in "ECM registration" in Section 6E3.**
E02	• Circuit interruption between: ECM – Wiring harness connector (wiring harness side) terminal E27-51 & Combination Meter – Wiring harness connector (wiring harness side) terminal G22-20 or • Defective component: Combination Meter
E03	• Short circuit to ground between: ECM – Wiring harness connector (wiring harness side) terminal E27-51 & Combination Meter – Wiring harness connector (wiring harness side) terminal G22-20 or • Defective component: Combination Meter
E04	• Circuit interruption between: Circuit Fuse – Output contact & Combination Meter – Wiring harness connector (wiring harness side) terminal G22-11 or • Defective component: Combination Meter

Test Table (For RB413D)

Test	Work Order Description	Nominal Value
T01	Check: Component	Test okay?
	• Ignition OFF • Ignition ON • Is at least one of the following indicators ON? – Charge Indicator Lamp – ABS Warning Lamp – Air Bag Warning Lamp	
	Yes: T02	No: E04
T02	Check: Short to Voltage/Ground/Interruption of Signal Circuit	Test okay?
	• Ignition OFF • Disconnect wiring harness connector from: ECM (Wiring Harness Connector G88) • Ignition ON • Is the following telltale OFF? Oil Level Warning Lamp	
	Yes: T03	No: E03
T03	Check: Interruption of Signal Circuit	Test okay?
	• Connect fused jumper wire to: ECM – Wiring harness connector (wiring harness side) terminal G88-51 & Ground • Is the following telltale ON? Oil Level Warning Lamp	
	Yes: E01	No: E02

Result Table (For RB413D)

Result	Cause Of Fault
E01	• Short circuit to voltage between: ECM – Wiring harness connector (wiring harness side) terminal G88-51 & Combination Meter – Wiring harness connector (wiring harness side) terminal G25-27 or • Defective component: ECM **NOTE:** **If ECM is replaced, register vehicle specification into ECM by performing procedure described in "ECM registration" in Section 6E3.**
E02	• Circuit interruption between: ECM – Wiring harness connector (wiring harness side) terminal G88-51 & Combination Meter – Wiring harness connector (wiring harness side) terminal G25-27 or • Defective component: Combination Meter
E03	• Short circuit to ground between: ECM – Wiring harness connector (wiring harness side) terminal G88-51 & Combination Meter – Wiring harness connector (wiring harness side) terminal G25-27 or • Defective component: Combination Meter
E04	• Circuit interruption between: Circuit Fuse – Output contact & Combination Meter – Wiring harness connector (wiring harness side) terminal G25-15 or • Defective component: Combination Meter

C-39, Engine Oil Level Circuit

Test Table (For RM413D)

Test	Work Order Description	Nominal Value
T01	Check: Mechanical Function	
	• Check Engine Oil Level	Is the oil level too low?
	Yes: E01	No: T02
T02	Check: Interruption of signal Circuit	
	• Ignition OFF • Disconnect wiring harness connector from: ECM and Oil Level Switch • Measure resistance between the following terminals: ECM – Wiring harness connector (wiring harness side) terminal E27-26 & Oil Level Switch – Wiring harness connector (wiring harness side) terminal C33-1	less than 5 Ohm
	Yes: T03	No: E02
T03	Check: Short to Ground of Signal Circuit	
	• Measure resistance between the following terminals: ECM – Wiring harness connector (wiring harness side) terminal E27-26 & Ground	greater than 500 kOhm
	Yes: T04	No: E03
T04	Check: Circuit Interruption of Ground Circuit	
	• Measure resistance between the following terminals: Oil Level Switch – Wiring harness connector (wiring harness side) terminal C33-2 & Ground	less than 5 Ohm
	Yes: T05	No: E04
T05	Check: Short to Voltage of Signal Circuit	
	• Measure voltage between the following terminals: Oil Level Switch – Wiring harness connector (wiring harness side) terminal C33-1 & Ground	less than 0.3 V
	Yes: T06	No: E05
T06	Check: Component	
	• Connect wiring harness connector to: Oil Level Switch • Measure resistance between the following terminals: ECM – Wiring harness connector (wiring harness side) terminal E27-26 & Ground	less than 5 Ohm
	Yes: E06	No: E07

Result Table (For RM413D)

Result	Cause Of Fault
E01	• Correct engine oil level.
E02	• Circuit interruption between: ECM – Wiring harness connector (wiring harness side) terminal E27-26 & Oil Level Switch – Wiring harness connector (wiring harness side) terminal C33-1
E03	• Short circuit to ground between: ECM – Wiring harness connector (wiring harness side) terminal E27-26 & Oil Level Switch – Wiring harness connector (wiring harness side) terminal C33-1
E04	• Circuit interruption between: Oil Level Switch – Wiring harness connector (wiring harness side) terminal C33-2 & Ground
E05	• Short circuit to voltage between: ECM – Wiring harness connector (wiring harness side) terminal E27-26 & Oil Level Switch – Wiring harness connector (wiring harness side) terminal C33-1
E06	• Defective component ECM **NOTE:** **If ECM is replaced, register vehicle specification into ECM by performing procedure described in "ECM registration" in Section 6E3.**
E07	• Defective component Oil Level Switch

Test Table (For RB413D)

Test	Work Order Description	Nominal Value
T01	Check: Mechanical Function	
	• Check Engine Oil Level	Is the oil level too low?
	Yes: E01	No: T02
T02	Check: Interruption of signal Circuit	
	• Ignition OFF • Disconnect wiring harness connector from: ECM • Disconnect wiring harness connector from: Oil Level Switch • Measure resistance between the following terminals: ECM – Wiring harness connector (wiring harness side) terminal G88-26 & Oil Level Switch – Wiring harness connector (wiring harness side) terminal C32-1	less than 5 Ohm
	Yes: T03	No: E02
T03	Check: Short to Ground of Signal Circuit	
	• Measure resistance between the following terminals: ECM – Wiring harness connector (wiring harness side) terminal G88-26 & Ground	greater than 500 kOhm
	Yes: T04	No: E03
T04	Check: Circuit Interruption of Ground Circuit	
	• Measure resistance between the following terminals: Oil Level Switch – Wiring harness connector (wiring harness side) terminal C32-2 & Ground	less than 5 Ohm
	Yes: T05	No: E04
T05	Check: Short to Voltage of Signal Circuit	
	• Measure voltage between the following terminals: Oil Level Switch – Wiring harness connector (wiring harness side) terminal C32-1 & Ground	less than 0.3 V
	Yes: T06	No: E05
T06	Check: Component	
	• Connect wiring harness connector to: Oil Level Switch • Measure resistance between the following terminals: ECM – Wiring harness connector (wiring harness side) terminal G88-26 & Ground	less than 5 Ohm
	Yes: E06	No: E07

Result Table (For RB413D)

Result	Cause Of Fault
E01	• Correct engine oil level.
E02	• Circuit interruption between: ECM – Wiring harness connector (wiring harness side) terminal G88-26 & Oil Level Switch – Wiring harness connector (wiring harness side) terminal C32-1
E03	• Short circuit to ground between: ECM – Wiring harness connector (wiring harness side) terminal G88-26 & Oil Level Switch – Wiring harness connector (wiring harness side) terminal C32-1
E04	• Circuit interruption between: Oil Level Switch – Wiring harness connector (wiring harness side) terminal C32-2 & Ground
E05	• Short circuit to voltage between: ECM – Wiring harness connector (wiring harness side) terminal G88-26 & Oil Level Switch – Wiring harness connector (wiring harness side) terminal C32-1
E06	• Defective component ECM **NOTE:** **If ECM is replaced, register vehicle specification into ECM by performing procedure described in "ECM registration" in Section 6E3.**
E07	• Defective component Oil Level Switch

C-40, Vehicle Speed Sensor Circuit

Result Table (For RM413D)

Result	Cause Of Fault
E01	• Circuit interruption between: Combination Meter – Wiring harness connector (wiring harness side) terminal G21-15 & ECM – Wiring harness connector (wiring harness side) terminal E27-89 or • Defective component: ECM **NOTE:** **If ECM is replaced, register vehicle specification into ECM by performing procedure described in "ECM registration" in Section 6E3.**

Result Table (For RB413D)

Result	Cause Of Fault
E01	• Circuit interruption between: Combination Meter – Wiring harness connector (wiring harness side) terminal G25-2 & ECM – Wiring harness connector (wiring harness side) terminal G88-89 or • Defective component: ECM **NOTE:** **If ECM is replaced, register vehicle specification into ECM by performing procedure described in "ECM registration" in Section 6E3.**

C-41, Function-Group Intake Air System

Result Table

Result	Cause Of Fault
E01	• Defective component: component, that is recognized as defective **NOTE:** **If ECM is replaced, register vehicle specification into ECM by performing procedure described in "ECM registration" in Section 6E3.**

C-42, Function-Group Fuel System

Test Table

Test	Work Order Description	Nominal Value
T01	Check: Diagnostic Trouble Code stored	
	Is the following Diagnostic Trouble Code stored? P1660 – Shut Off Valve	
	Yes: E01	No: E02

Result Table

Result	Cause Of Fault
E01	• Mechanical fault in the low-pressure section • Check the following mechanical fault sources: – The low pressure fuel pump delivery rate is too low – Shut-off valve in high pressure fuel pump or • Defective component: Fuel Pump or High-pressure fuel pump **NOTE:** **The replacement of the components must be done in the listed order.** **The system must be checked for proper operation after every replacement.**
E02	• Defective component: component, that is recognized as defective **NOTE:** **If ECM is replaced, register vehicle specification into ECM by performing procedure described in "ECM registration" in Section 6E3.**

C-43, Function-Group Low Pressure Section

Result Table

Result	Cause Of Fault
E01	• Mechanical fault in the low-pressure section • Check the following mechanical fault sources: – Screen in fuel tank – Pressure relief valve in fuel tank – The low pressure fuel pump delivery rate is too low – Overflow valve in fuel filter – Shut-off valve in high pressure fuel pump or • Defective component: component, that is recognized as defective

C-44, Function-Group Low and High Pressure Section

Result Table

Result	Cause Of Fault
E01	• Mechanical fault in the low-pressure section or • Mechanical fault in the high pressure section • Check the following mechanical fault sources: – Screen in fuel tank – Pressure relief valve in fuel tank – The low pressure fuel pump delivery rate is too low – Overflow valve in fuel filter – Shut-off valve in high pressure fuel pump – The high pressure fuel pump delivery rate is too low or • Defective component: component, that is recognized as defective **NOTE:** **If ECM is replaced, register vehicle specification into ECM by performing procedure described in "ECM registration" in Section 6E3.**

C-45, Function-Group High Pressure Area

Result Table

Result	Cause Of Fault
E01	• Mechanical fault in the high pressure section • Check all mechanical components of the concerned system. or • Defective component: component, that is recognized as defective **NOTE:** **If ECM is replaced, register vehicle specification into ECM by performing procedure described in "ECM registration" in Section 6E3.**

C-46, Starter Circuit

Test Table (For RM413D)

Test	Work Order Description	Nominal Value
T01	Check: Starter	
	• Check the following component for proper operation: Starting Motor • Turn ignition switch to ST position	Does the starter crank?
	Yes: T02	No: T14
T02	Check: Battery Voltage	
	• Verify battery condition • Measure voltage between the following terminals: Battery – Positive (+) terminal & Ground	greater than 11 V
	Yes: T03	No: T13
T03	Load Simulation	
	• Check battery condition under load simulation Measure voltage between the following terminals: Battery – Positive (+) terminal & Ground • Check current consumption with current probe Connect current probe to following lead: Starting Motor – Terminal C45-1 • Turn ignition switch to ST position • Check current consumption and battery voltage both at the same time	less than 400 A and Battery voltage is less than 8 V
	Yes: T04	No: T10
T04	Check: Engine Start	
	• Charge or replace battery or • Connect loaded battery parallel to the battery in the vehicle • Try to start engine once more	Does the engine start?
	Yes: T05	No: T10
T05	Check: Component	
	• Check charge by generator Measure voltage between: Generator – C47-1 & Ground • Engine running • Increase engine speed to 3000 rpm	13.4 ... 14.5 V Engine running at idle speed, operating temperature All consumers turned off
	Yes: T06	No: T09

Test	Work Order Description	Nominal Value
T06	Check: Component	
	• Check stall current • Measure current between the following terminals: Battery – Positive (+) terminal & Battery – Wiring harness **NOTE:** **All vehicle systems must be switched OFF during these tests. Doors must be closed, engine compartment lighting must be disconnected.**	Stall current greater than 50 mA?
	Yes: T07	No: E03
T07	Check: Component	
	• Check stall current Remove consecutively all fuses from the fuse-boxes.	Does the stall current change to a value less than 50 mA after removing a fuse?
	Yes: T08	No: E02
T08	Check: Component	
	• Check stall current • Install following component: Last removed fuse • Disconnect consecutively all components which are connected to the circuit behind this fuse.	Does the stall current change to a value less than 50 mA after removing a component?
	Yes: E01	No: E02
T09	Check: Component	
	• Check the following circuit for proper operation: Wiring harness to generator terminal C42-1 Wiring harness to generator terminal C47-1 Check all ground connections	Test okay?
	Yes: E04	No: E05
T10	Load Simulation	
	• Check battery condition under load simulation Measure voltage between the following terminals: Battery – Positive (+) terminal & Ground • Check current consumption with current probe Connect current probe to following lead: Starting Motor – Terminal C45-1 • Turn ignition switch to ST position • Check current consumption and battery voltage both at the same time	Less than 400 A and more than 8 V? Go to YES More than 400 A and less than 8 V? Go to NO
	Yes: T11	No: E09
T11	Check: Component	
	• Check wiring harness and connectors to battery and starter	Connectors okay? Is the ground connection okay?
	Yes: T12	No: E08

Test	Work Order Description	Nominal Value
T12	Check: Component	
	• Verify mechanical system functions/components – Check engine mechanic – Check freedom of motion on crankshaft	Mechanical function check okay?
	Yes: E06	No: E07
T13	Check: Component	
	• Charge or replace battery • Measure voltage between the following terminals: Battery – Positive (+) terminal & Ground	greater than 11 V
	Yes: T10	No: E10
T14	Check: Battery Voltage	
	• Verify battery condition • Ignition ON • Turn all electrical consumers ON • Measure voltage between: Battery – Positive (+) terminal & Ground	greater than 11 V
	Yes: T15	No: T17
T15	Check: Component	
	• Check terminal G05-3 to ignition switch Measure voltage between: Starting Motor – Wiring harness connector (wiring harness side) terminal C46-1 & Ground • Turn ignition switch to ST position	greater than 11 V
	Yes: T11	No: T16
T16	Check: Component	
	• Check the following component for proper operation: Ignition Switch – Terminal G05-3	Test okay?
	Yes: E11	No: E12
T17	Check: Engine Start	
	• Charge or replace battery or • Connect loaded battery parallel to the battery in the vehicle • Try to start engine once more	Does the starter crank?
	Yes: T05	No: T15

Result Table (For RM413D)

Result	Cause Of Fault
E01	• Defective component: Last disconnected component
E02	Fault in wiring harness **NOTE:** **During fault searching in the wiring harness, the sections of the wiring harness can be separated at the assigned connectors. When the stall current changes to the permissible value after separating a section, the fault is located in the concerning section of the wiring harness.**
E03	• Battery discharged Cell shorted Corroded Contacts Bad ground connection
E04	• Defective component: Generator
E05	• Fault in wiring harness Wiring harness to generator terminal C42-1 or Wiring harness to generator terminal C47-1 or Bad ground connection
E06	• Circuit interruption between: Battery – Positive (+) terminal & Starting Motor – Wiring harness connector (wiring harness side) terminal C45-1 or • Defective component: Starting Motor
E07	• Mechanical engine problem
E08	• Repair/clean wiring harness and connectors to battery/starting motor
E09	• Mechanical engine problem or Defective component: Starting Motor **NOTE:** **The replacement of the components must be done in the listed order.** **The system must be checked for proper operation after every replacement.**
E10	• Defective component: Battery
E11	• Circuit interruption between: Ignition Switch – Wiring harness connector (wiring harness side) terminal G05-3 & Starting Motor – Wiring harness connector (wiring harness side) terminal C46-1
E12	• Defective component: Ignition Switch

Test Table (For RB413D)

Test	Work Order Description	Nominal Value
T01	Check: Starter	
	• Check the following component for proper operation: Starting Motor • Turn ignition switch to ST position	Does the starter crank?
	Yes: T02	No: T14
T02	Check: Battery Voltage	
	• Verify battery condition • Measure voltage between the following terminals: Battery – Positive (+) terminal & Ground	greater than 11 V
	Yes: T03	No: T13
T03	Load Simulation	
	• Check battery condition under load simulation Measure voltage between the following terminals: Battery – Positive (+) terminal & Ground • Check current consumption with current probe Connect current probe to following lead: Starting Motor – Terminal C05-1 • Turn ignition switch to ST position • Check current consumption and battery voltage both at the same time	less than 400 A and Battery voltage is less than 8 V
	Yes: T04	No: T10
T04	Check: Engine Start	
	• Charge or replace battery or • Connect loaded battery parallel to the battery in the vehicle • Try to start engine once more	Does the engine start?
	Yes: T05	No: T10
T05	Check: Component	
	• Check charge by generator Measure voltage between the following terminals: Generator – C08-1 & Ground • Engine running • Increase engine speed to 3000 rpm	13.4 ... 14.5 V Engine running at idle speed, operating temperature All consumers turned off
	Yes: T06	No: T09

Test	Work Order Description	Nominal Value
T06	Check: Component	
	• Check stall current • Measure current between the following terminals: Battery – Positive (+) terminal & Battery – Positive (+) terminal Wiring harness **NOTE:** **All vehicle systems must be switched OFF during these tests. Doors must be closed, engine compartment lighting must be disconnected.**	Stall current greater than 50 mA?
	Yes: T07	No: E03
T07	Check: Component	
	• Check stall current Remove consecutively all fuses from the fuse-boxes.	Does the stall current change to a value less than 50 mA after removing a fuse?
	Yes: T08	No: E02
T08	Check: Component	
	• Check stall current • Install following component: Last removed fuse • Disconnect consecutively all components which are connected to the circuit behind this fuse.	Does the stall current change to a value less than 50 mA after removing a component?
	Yes: E01	No: E02
T09	Check: Component	
	• Check the following circuit for proper operation: Wiring harness to generator terminal C07-1 Wiring harness to generator terminal C08-1 Check all ground connections	Test okay?
	Yes: E04	No: E05
T10	Load Simulation	
	• Check battery condition under load simulation Measure voltage between the following terminals: Battery – Positive (+) terminal & Ground • Check current consumption with current probe Connect current probe to following lead: Starting Motor – Terminal C05-1 • Turn ignition switch to ST position • Check current consumption and battery voltage both at the same time	Less than 400 A and more than 8 V? Go to YES More than 400 A and less than 8 V? Go to NO
	Yes: T11	No: E09
T11	Check: Component	
	• Check wiring harness and connectors to battery and starter	Connectors okay? Is the ground connection okay?
	Yes: T12	No: E08

Test	Work Order Description	Nominal Value
T12	Check: Component	
	• Verify mechanical system functions/components – Check engine mechanic – Check freedom of motion on crankshaft	Mechanical function check okay?
	Yes: E06	No: E07
T13	Check: Component	
	• Charge or replace battery • Measure voltage between the following terminals: Battery – Positive (+) terminal & Ground	greater than 11 V
	Yes: T10	No: E10
T14	Check: Battery Voltage	
	• Verify battery condition • Ignition ON • Turn all electrical consumers ON • Measure voltage between the following terminals: Battery – Positive (+) terminal & Ground	greater than 11 V
	Yes: T15	No: T17
T15	Check: Component	
	• Check terminal G24-3 to ignition switch Measure voltage between the following terminals: Starting Motor – Wiring harness connector (wiring harness side) terminal C06-1 & Ground • Turn ignition switch to ST position	greater than 11 V
	Yes: T11	No: T16
T16	Check: Component	
	• Check the following component for proper operation: Ignition Switch – Terminal G24-3	Test okay?
	Yes: E11	No: E12
T17	Check: Engine Start	
	• Charge or replace battery or • Connect loaded battery parallel to the battery in the vehicle • Try to start engine once more	Does the starter crank?
	Yes: T05	No: T15

Result Table (For RB413D)

Result	Cause Of Fault
E01	• Defective component: Last disconnected component
E02	Fault in wiring harness **NOTE:** **During fault searching in the wiring harness, the sections of the wiring harness can be separated at the assigned connectors. When the stall current changes to the permissible value after separating a section, the fault is located in the concerning section of the wiring harness.**
E03	• Battery discharged Cell shorted Corroded Contacts Bad ground connection
E04	• Defective component: Generator
E05	• Fault in wiring harness Wiring harness to generator terminal C07-1 or Wiring harness to generator terminal C08-1 or Bad ground connection
E06	• Circuit interruption between: Battery – Positive (+) terminal & Starting Motor – Wiring harness connector (wiring harness side) terminal C05-1 or • Defective component: Starting Motor
E07	• Mechanical engine problem
E08	• Repair/clean wiring harness and connectors to battery/starting motor
E09	• Mechanical engine problem or Defective component: Starting Motor **NOTE:** **The replacement of the components must be done in the listed order.** **The system must be checked for proper operation after every replacement.**
E10	• Defective component: Battery
E11	• Circuit interruption between: Ignition Switch – Wiring harness connector (wiring harness side) terminal G24-3 & Starting Motor – Wiring harness connector (wiring harness side) terminal C06-1
E12	• Defective component: Ignition Switch

C-47, System Status Information

Result	Cause Of Fault
E01	• This trouble code indicates an invalid operating condition. Operation mode with high load and high coolant temperature or Operation mode with high load and low fuel reserve • Inform the customer, that the system behaviour is normal respectively how to operate the system correctly. **NOTE:** **This trouble code is set when an engine protection function is activated. (overheating protection)**

C-48, Engine Coolant Temperature Circuit

Test Table (For RM413D)

Test	Work Order Description	Nominal Value
T01	Check: Short to Voltage of Signal Circuit	less than 0.3V
	• Ignition OFF • Disconnect wiring harness connector from: Combination meter and ECM • Ignition ON • Measure voltage between the following terminals: Combination meter – Wiring harness connector (wiring harness side) terminal G21-1 & Ground	
	Yes: T02	No: E01
T02	Check: Short to Ground of Signal Circuit	greater than 500 kOhm
	• Ignition OFF • Measure resistance between the following terminals: Combination meter – Wiring harness connector (wiring harness side) terminal G21-1 & Ground	
	Yes: T03	No: E02
T03	Check: Short to Interruption of Signal Circuit	less than 5 Ohm
	• Ignition OFF • Measure resistance between the following terminals: Combination meter – Wiring harness connector (wiring harness side) terminal G21-1 & ECM – Wiring harness connector (wiring harness side) terminal C66-45	
	Yes: E04	No: E03

Result Table (For RM413D)

Result	Cause of Fault
E01	• Short circuit to voltage between: Combination meter – Wiring harness connector (wiring harness side) terminal G21-1 & ECM – Wiring harness connector (wiring harness side) terminal C66-45
E02	• Short circuit to ground between: Combination meter – Wiring harness connector (wiring harness side) terminal G21-1 & ECM – Wiring harness connector (wiring harness side) terminal C66-45
E03	• Circuit interruption between: Combination meter – Wiring harness connector (wiring harness side) terminal G21-1 & ECM – Wiring harness connector (wiring harness side) terminal C66-45
E04	• Defective component: Combination meter or • Defective component: ECM **NOTE:** • **The replacement of the components must be done in the listed order. The system must be checked for proper operation after every replacement.** • **If ECM is replaced, register vehicle specification into ECM by performing procedure described in "ECM registration" in Section 6E3.**

Test Table (For RB413D)

Test	Work Order Description	Nominal Value
T01	Check: Short to Voltage of Signal Circuit	less than 0.3V
	• Ignition OFF • Disconnect wiring harness connector from: Combination meter and ECM • Ignition ON • Measure voltage between the following terminals: Combination meter – Wiring harness connector (wiring harness side) terminal G25-21 & Ground	
	Yes: T02	No: E01
T02	Check: Short to Ground of Signal Circuit	greater than 500 kOhm
	• Ignition OFF • Measure resistance between the following terminals: Combination meter – Wiring harness connector (wiring harness side) terminal G25-21 & Ground	
	Yes: T03	No: E02
T03	Check: Short to Interruption of Signal Circuit	less than 5 Ohm
	• Ignition OFF • Measure resistance between the following terminals: Combination meter – Wiring harness connector (wiring harness side) terminal G25-21 & ECM – Wiring harness connector (wiring harness side) terminal D26-45	
	Yes: E04	No: E03

Result Table (For RB413D)

Result	Cause of Fault
E01	• Short circuit to voltage between: Combination meter – Wiring harness connector (wiring harness side) terminal G25-21 & ECM – Wiring harness connector (wiring harness side) terminal D26-45
E02	• Short circuit to ground between: Combination meter – Wiring harness connector (wiring harness side) terminal G25-21 & ECM – Wiring harness connector (wiring harness side) terminal D26-45
E03	• Circuit interruption between: Combination meter – Wiring harness connector (wiring harness side) terminal G25-21 & ECM – Wiring harness connector (wiring harness side) terminal D26-45
E04	• Defective component: Combination meter or • Defective component: ECM **NOTE:** • **The replacement of the components must be done in the listed order. The system must be checked for proper operation after every replacement.** • **If ECM is replaced, register vehicle specification into ECM by performing procedure described in "ECM registration" in Section 6E3.**

C-49, Engine Speed Input Signal Circuit

Test Table (For RM413D)

Test	Work Order Description	Nominal Value
T01	Check: Short to Voltage/Ground/Interruption of Signal Circuit	
	• Ignition OFF • Disconnect wiring harness connector from: EPS control module (Wiring Harness Connector G13) • Ignition ON • Engine running at idle speed Scan Tool display Data List Parameter Engine Speed	Is engine speed displayed on scan tool?
	Yes: E01	No: T02
T02	Check: Short to Voltage/Ground/Interruption of Signal Circuit	
	• Ignition OFF • Disconnect wiring harness connector from: Combination meter • Ignition ON • Engine running at idle speed • Connect revolution indicator to: Combination meter – Wiring Harness Connector (wiring harness side) terminal G21-6 & Ground **NOTE:** **Revolution meter setting:** **4 cylinder, 4 stroke**	Is engine speed displayed on revolution meter?
	Yes: E02	No: T03
T03	Check: Short to Voltage of Signal Circuit	
	• Ignition OFF • Disconnect wiring harness connector from: ECM • Ignition ON • Measure voltage between the following terminals: Combination meter – Wiring Harness Connector (wiring harness side) terminal G21-6 & Ground	less than 0.3V
	Yes: T04	No: E05
T04	Check: Short to Ground of Signal Circuit	
	• Ignition OFF • Measure resistance between the following terminals: Combination meter – Wiring harness connector (wiring harness side) terminal G21-6 & Ground	greater than 500 kOhm
	Yes: E03	No: E04

Result Table (For RM413D)

Result	Cause of Fault
E01	• Defective component: EPS control module
E02	• Defective component: Combination meter
E03	• Circuit interruption between: Combination meter – Wiring harness connector (wiring harness side) terminal G21-16 & ECM – Wiring harness connector (wiring harness side) terminal E27-89 or Defective component: ECM **NOTE:** **If ECM is replaced, register vehicle specification into ECM by performing procedure described in "ECM registration" in Section 6E3.**
E04	• Short circuit to ground between: Combination meter – Wiring harness connector (wiring harness side) terminal G21-16 & ECM – Wiring harness connector (wiring harness side) terminal E27-89 & Wiring harness connector terminal of all components (wiring harness side), which were disconnected from the wiring harness during this trouble shooting session
E05	• Short circuit to voltage between: Combination meter – Wiring harness connector (wiring harness side) terminal G21-16 & ECM – Wiring harness connector (wiring harness side) terminal E27-89 & Wiring harness connector terminal of all components (wiring harness side), which were disconnected from the wiring harness during this trouble shooting session

Test Table (For RB413D)

Test	Work Order Description	Nominal Value
T01	Check: Short to Voltage/Ground/Interruption of Signal Circuit	
	• Ignition OFF • Disconnect wiring harness connector from: PTC control module (Wiring Harness Connector G92) • Ignition ON • Engine running at idle speed Scan Tool display Data List Parameter Engine Speed	Is engine speed displayed on scan tool?
	Yes: E01	No: T02
T02	Check: Short to Voltage/Ground/Interruption of Signal Circuit	
	• Ignition OFF • Disconnect wiring harness connector from: Combination meter • Ignition ON • Engine running at idle speed • Connect revolution meter to: Combination meter – Wiring Harness Connector (wiring harness side) terminal G25-18 & Ground **NOTE:** **Revolution meter setting:** **4 cylinder, 4 stroke**	Is engine speed displayed on revolution meter?
	Yes: E02	No: T03
T03	Check: Short to Voltage of Signal Circuit	
	• Ignition OFF • Disconnect wiring harness connector from: ECM • Ignition ON • Measure voltage between the following terminals: Combination meter – Wiring Harness Connector (wiring harness side) terminal G25-18 & Ground	less than 0.3V
	Yes: T04	No: E05
T04	Check: Short to Ground of Signal Circuit	
	• Ignition OFF • Measure resistance between the following terminals: Combination meter – Wiring harness connector (wiring harness side) terminal G25-18 & Ground	greater than 500 kOhm
	Yes: E03	No: E04

Result Table (For RB413D)

Result	Cause of Fault
E01	• Defective component: PTC control module
E02	• Defective component: Combination meter
E03	• Circuit interruption between: Combination meter – Wiring harness connector (wiring harness side) terminal G25-18 & ECM – Wiring harness connector (wiring harness side) terminal G88-29 or • Defective component: ECM **NOTE:** **If ECM is replaced, register vehicle specification into ECM by performing procedure described in "ECM registration" in Section 6E3.**
E04	• Short circuit to ground between: Combination meter – Wiring harness connector (wiring harness side) terminal G25-18 & ECM - Wiring harness connector (wiring harness side) terminal G88-29 & Wiring harness connector terminal of all components (wiring harness side), which were disconnected from the wiring harness during this trouble shooting session
E05	• Short circuit to voltage between: Combination meter – Wiring harness connector (wiring harness side) terminal G25-18 & ECM - Wiring harness connector (wiring harness side) terminal G88-29 & Wiring harness connector terminal of all components (wiring harness side), which were disconnected from the wiring harness during this trouble shooting session

Special Tool

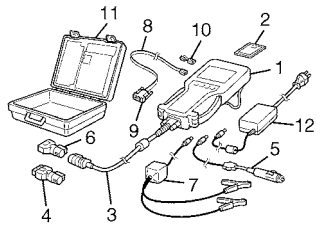

Tech 2 kit (SUZUKI scan tool)
(See NOTE)

NOTE:

This kit includes the following items.
1. Tech 2, 2. PCMCIA card, 3. DLC cable, 4. SAE 16/19 adapter, 5. Cigarette cable, 6. DLC loopback adapter, 7. Battery power cable, 8. RS232 cable, 9. RS232 adapter, 10. RS232 loopback connector, 11. Storage case, 12. Power supply

SECTION 6A3

ENGINE MECHANICAL (Z13DT ENGINE)

WARNING:

For vehicles equipped with a Supplemental Restraint (Air Bag) System:

- **Service on and around the air bag system components or wiring must be performed only by an authorized SUZUKI dealer. Refer to "Air Bag System Components and Wiring Location View" under "General Description" in air bag system section in order to confirm whether you are performing service on or near the air bag system components or wiring. Please observe all WARNINGs and "Service Precautions" under "On-Vehicle Service" in air bag system section before performing service on or around the air bag system components or wiring. Failure to follow WARNINGs could result in unintentional activation of the system or could render the system inoperative. Either of these two conditions may result in severe injury.**
- **Technical service work must be started at least 90 seconds after the ignition switch is turned to the "LOCK" position and the negative cable is disconnected from the battery. Otherwise, the system may be activated by reserve energy in the Sensing and Diagnostic Module (SDM).**

CAUTION:

Be sure to read "Precautions" in Section 6E3 before disconnecting fuel line or removing fuel system part(s). Failure to follow "Precautions" could result unneeded fuel system repairs.

CONTENTS

Diagnosis 6A3-3
- Compression Check 6A3-3
- Oil Pressure Check 6A3-4

On-Vehicle Service 6A3-6
- Air Cleaner Components 6A3-6
- Air Cleaner Filter Removal and Installation 6A3-7
- Air Cleaner Filter Inspection and Cleaning 6A3-7
- Air Cleaner Assembly Removal and Installation 6A3-7
- Inter Cooler Components 6A3-8
- Inter Cooler Removal and Installation 6A3-9
- Turbocharger Components 6A3-10
- Turbocharger Removal and Installation 6A3-11
- Turbocharger Inspection 6A3-15
- Intake Manifold Components 6A3-16
- Intake Manifold Removal and Installation 6A3-16
- Exhaust Manifold Components 6A3-18
- Exhaust Manifold Removal and Installation 6A3-18
- Vacuum Pump Removal and Installation 6A3-20
- Oil Pressure Switch Removal and Installation 6A3-20
- Oil Cooler Components 6A3-21
- Oil Cooler Removal and Installation 6A3-21
- Oil Pan Components 6A3-24
- Oil Pan Removal and Installation 6A3-24

Unit Repair Overhaul 6A3-27
- Engine Assembly Removal and Installation 6A3-27
- Timing Chain Cover and Timing Chain Components 6A3-31
- Timing Chain Cover and Timing Chain Removal and Installation 6A3-32
- Timing Chain Cover and Timing Chain Inspection 6A3-40
- Oil Pump / Oil Pump Strainer Components 6A3-42
- Oil Pump / Oil Pump Strainer Removal and Installation 6A3-42
- Oil Pump Strainer Cleaning 6A3-43
- Oil Pump Inspection 6A3-43
- Camshaft Housing Components 6A3-44
- Camshaft Housing Assembly Removal and Installation 6A3-45

Camshaft Housing Assembly Disassembly and Reassembly 6A3-47
Camshaft Inspection 6A3-50
Valves and Cylinder Head Components 6A3-53
Valves and Cylinder Head Assembly Removal and Installation 6A3-54
Valves and Cylinder Head Assembly Disassembly and Reassembly 6A3-58
Valves and Cylinder Head Components Inspection 6A3-60
Pistons, Piston Rings, Connecting Rods and Cylinder Components 6A3-62
Pistons, Piston Rings, Connecting Rods and Cylinder Removal and Installation 6A3-62
Pistons, Piston Rings, Connecting Rods and Cylinder Disassembly and Reassembly 6A3-65
Pistons, Piston Rings, Connecting Rods and Cylinder Inspection 6A3-66
Main Bearings, Crankshaft and Cylinder Block Components 6A3-71
Main Bearings, Crankshaft and Cylinder Block Removal and Installation 6A3-71
Main Bearings, Crankshaft and Cylinder Block Inspection 6A3-77
Special Tool 6A3-79
Tightening Torque Specifications 6A3-80
Required Service Material 6A3-82

Diagnosis

Compression Check

Check compression pressure on all 4 cylinders as follows:

1) Warm up engine.
2) Stop engine after warming up.

NOTE:

After warming up engine, place transmission gear shift lever in "Neutral" and set parking brake and block drive wheels.

3) Disconnect negative (–) cable at battery.
4) Disconnect glow controller connector referring to "Glow controller removal and installation" in Section 6E3.
5) Remove all glow plugs referring to "Glow plug removal and installation" in Section 6E3.

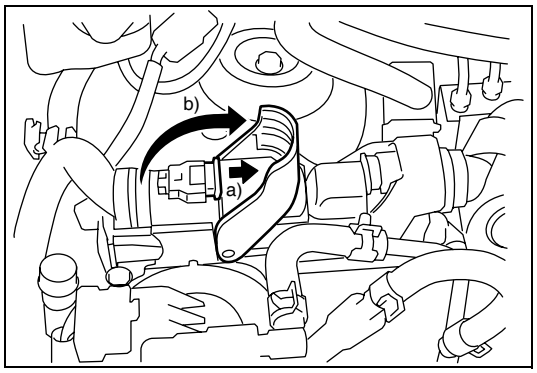

6) Disconnect connectors from ECM as follows.
   a) Pull out lock slider to release locking of lock lever.
   b) Pull up the lock lever.

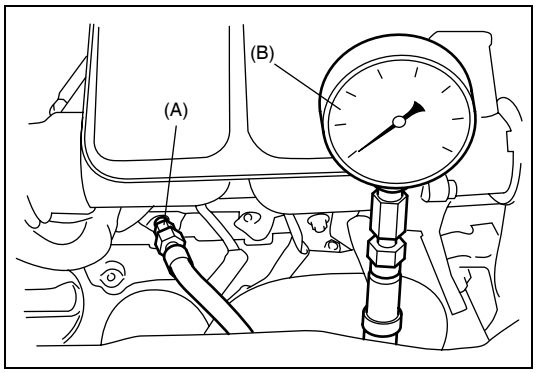

7) Install special tools into glow plug hole.

Special tool
(A): 09915-68610
(B): 09912-57821

8) Connect negative (–) cable at battery.

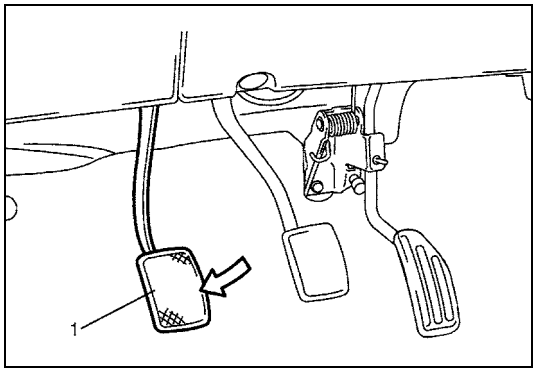

9) Disengage clutch (1) in order to lighten starting load on engine.

10) Crank engine with fully charged battery and read highest pressure on compression gauge.
11) Carry out steps 7) to 10) on each cylinder in order to obtain 4 readings.

NOTE:

- **For measuring compression pressure, crank engine at least 200 rpm by using fully charged battery.**
- **If measured compression pressure is excessively low at one of 4 cylinder, check installation condition of special tool. If it is properly installed, possibility is compression pressure leakage from where piston ring, valve contact and cylinder head gasket.**

Compression pressure specification
Max. difference between any two cylinders:
150 kPa (1.5 kg/cm^2, 21.3 psi)

12) Disconnect negative (–) cable at battery.
13) After checking, install glow plugs referring to "Glow plug removal and installation" in Section 6E3.
14) Connect ECM connector.
15) Connect glow controller connector referring to "Glow controller removal and installation" in Section 6E3.
16) Connect negative (–) cable at battery.

Oil Pressure Check

WARNING:
To avoid danger of being burned, do not touch exhaust manifold when exhaust system is hot.

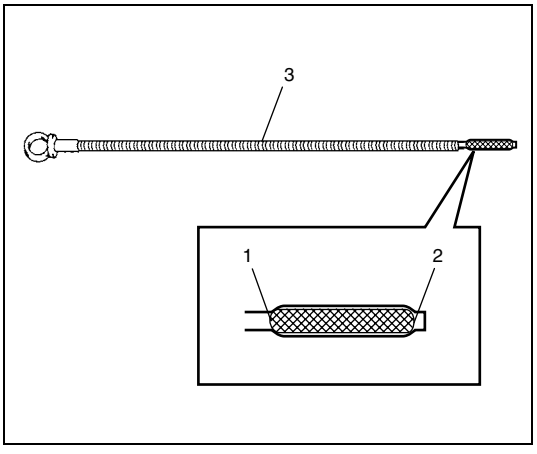

1) Prior to checking oil pressure, check the following items.
   - Oil level in oil pan.
     If oil level is low, add oil up to full level mark (1) on oil level gauge (3).
   - Oil quality.
     If oil is discolored or deteriorated, change it. For particular oil to be used, refer to "Engine Oil and Oil Filter Replacement (Z13DT)" in Section 0B.
   - Oil leaks.
     If leak is found, repair it.

2. Low level mark

2) Disconnect oil pressure switch referring to "Oil Pressure Switch Removal and Installation" in this section.

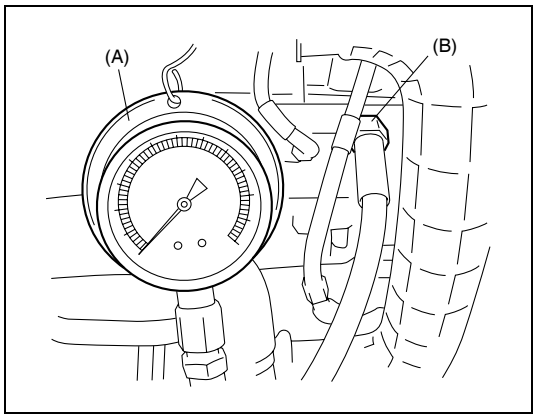

3) Install special tools to vacated threaded hole.

CAUTION:

Be careful not to make special tool touch exhaust manifold when installing because exhaust manifold becomes very hot.

Special tool
(A): 09915-77311
(B): 09919-46010

4) Start engine and warm it up to normal operating temperature.

NOTE:

Be sure to place transmission gear shift lever in "Neutral" and set parking brake and block drive wheels.

5) After warming up, measure oil pressure at specified idle speed.

NOTE:

For specified idle speed, refer to "Idle Speed Inspection" in Section 6E3.

Oil pressure specification:
Approx. 140 kPa (1.4 kg/cm 20.0 psi) at specified idle speed

6) Stop engine and remove oil pressure gauge and attachment.
7) Install oil pressure switch referring to "Oil Pressure Switch Removal and Installation" in this section.
8) Start engine and check oil pressure switch for oil leakage. If oil leakage is found, repair it.

On-Vehicle Service

Air Cleaner Components

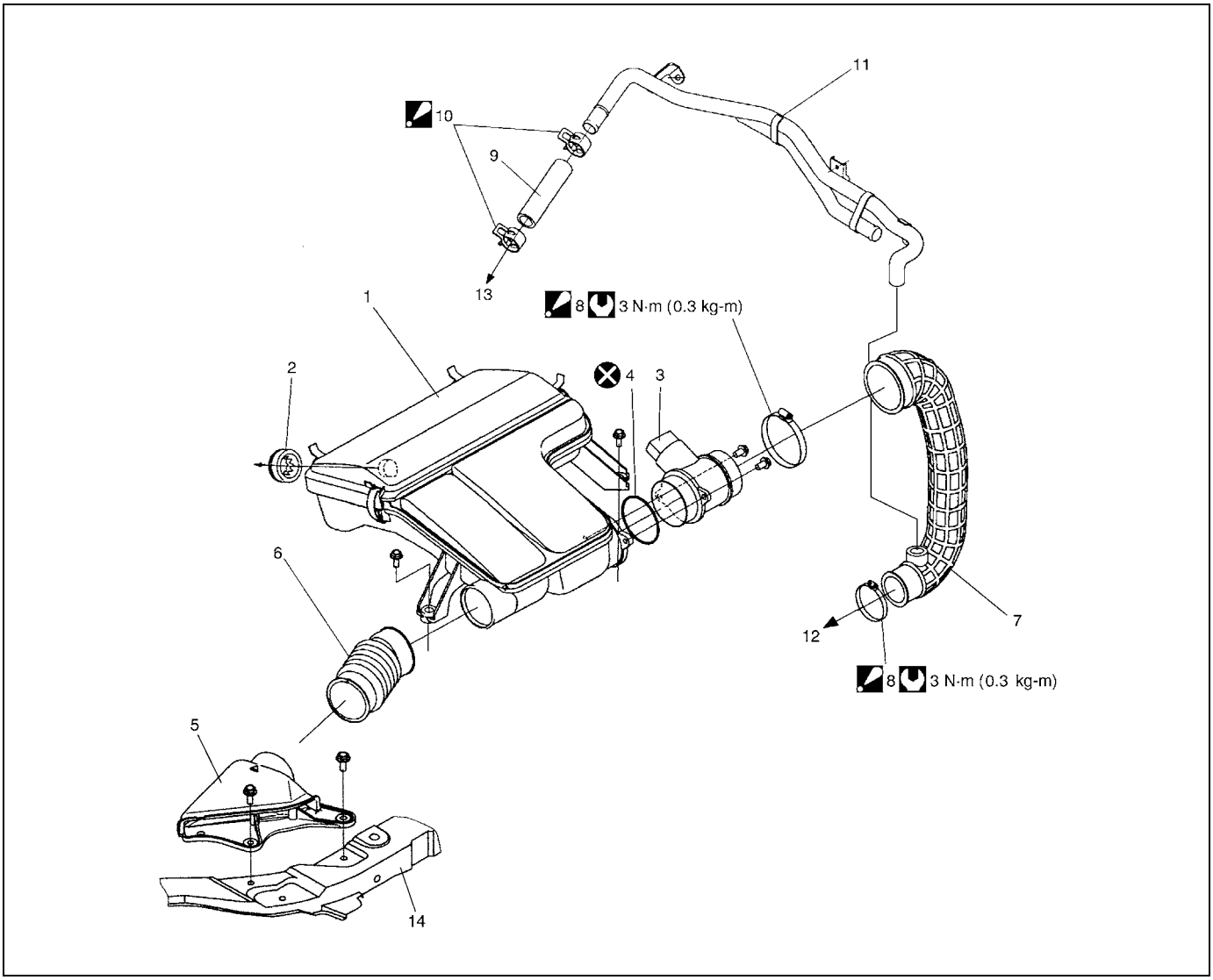

1. Air cleaner assembly	7. Air cleaner outlet hose	13. To engine
2. Air cleaner grommet	8. Hose clamp Be sure to position clamp screw in specified place as shown in figure.	14. Upper member
3. MAF sensor assembly	9. Breather hose	Tightening torque
4. MAF sensor O-ring	10. Breather hose clip Be sure to position clip in specified direction as shown in figure.	Do not reuse.
5. Air cleaner suction pipe	11. Breather pipe	
6. Air suction hose	12. To turbocharger	

Air Cleaner Filter Removal and Installation

Removal

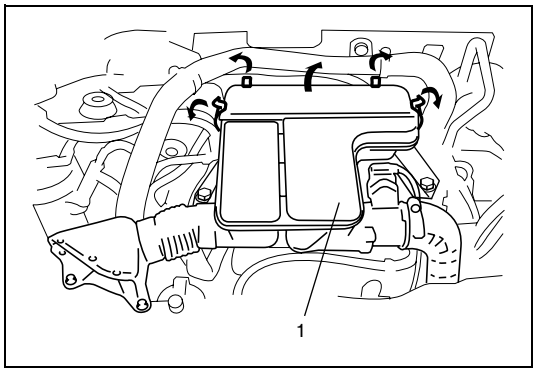

1) Unhook air cleaner assembly (1) clamps.
2) Open air cleaner assembly.
3) Remove air cleaner filter from air cleaner assembly.

Installation

Reverse removal procedure for installation.

Air Cleaner Filter Inspection and Cleaning

- Check air cleaner filter for dirt. Replace excessively dirty filter.
- Blow off dust by compressed air from air outlet side of filter.

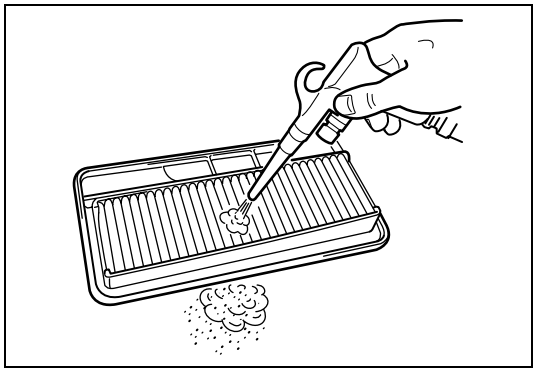

Air Cleaner Assembly Removal and Installation

Removal

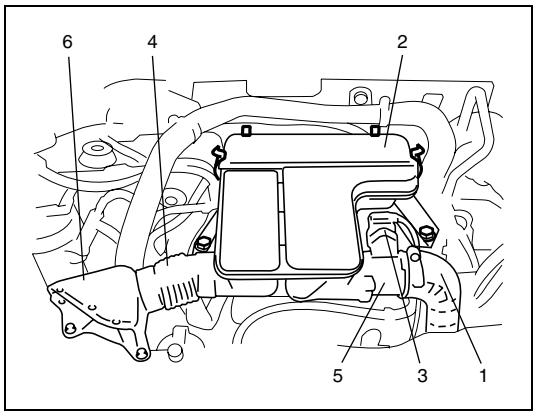

1) Disconnect air cleaner outlet hose (1) from air cleaner assembly (2).
2) Disconnect MAF sensor connector (3) from MAF sensor assembly (5).
3) Remove air suction hose (4) with air cleaner suction pipe (6) from air cleaner assembly (2).
4) Remove air cleaner assembly (2).

Installation

Reverse removal procedure for installation noting the following.

- Clamp each hose securely.
- Tighten air cleaner outlet hose clamp to specified torque referring to “Air Cleaner Components” in this section.

Inter Cooler Components

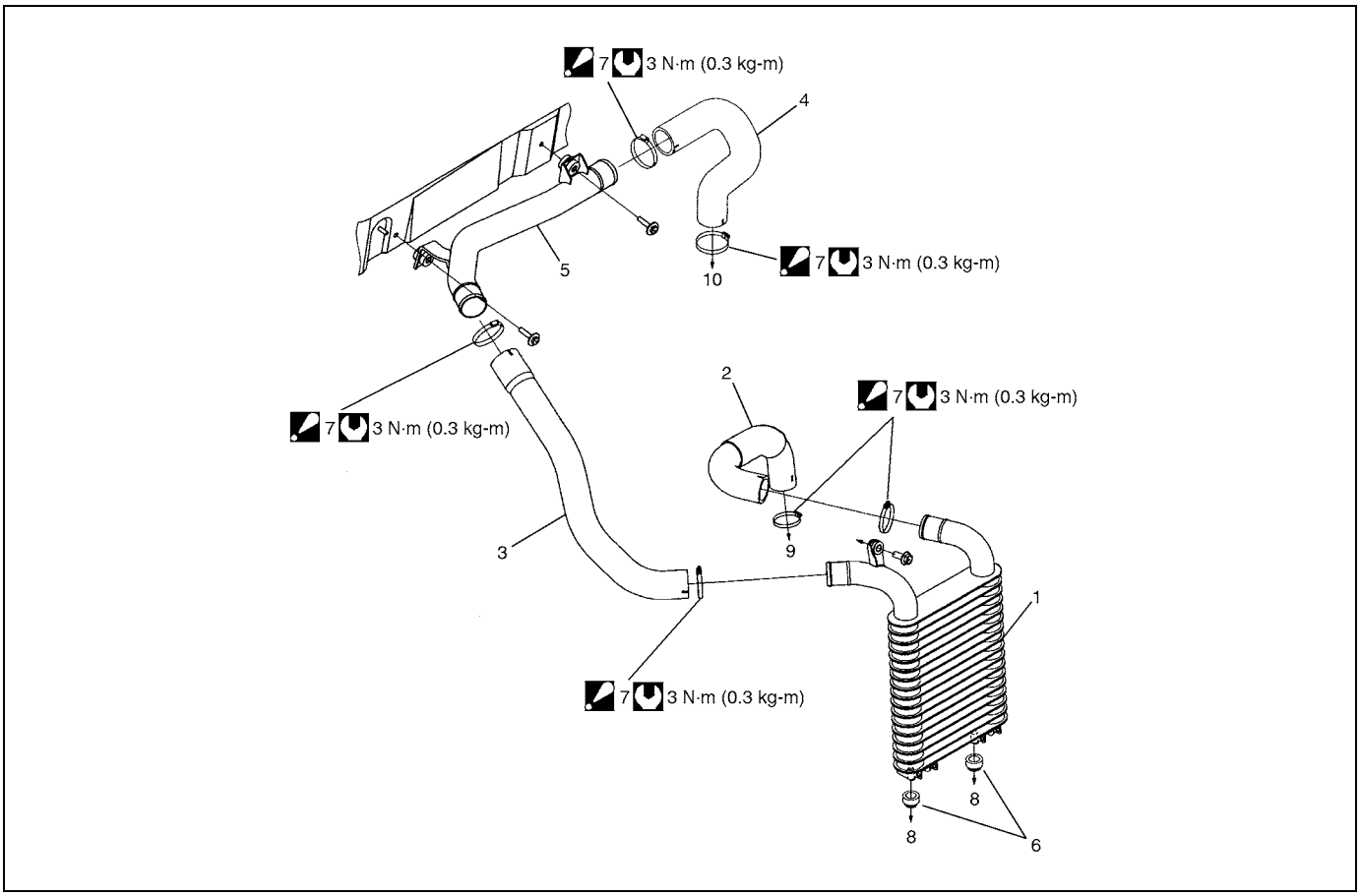

1. Inter cooler	5. Inter cooler outlet pipe	9. To turbocharger
2. Inter cooler inlet hose	6. Inter cooler mount	10. To air intake joint
3. Inter cooler outlet No.1 hose	7. Hose clamp Be sure to position clamp screw in specified place as shown in figure.	Tightening torque
4. Inter cooler outlet No.2 hose	8. To lower member	

Inter Cooler Removal and Installation

Removal

1) Remove front bumper referring to “Front Bumper and Rear Bumper Removal and Installation” for RM413D or “Front Bumper and Rear Bumper” for RB413D in Section 9.

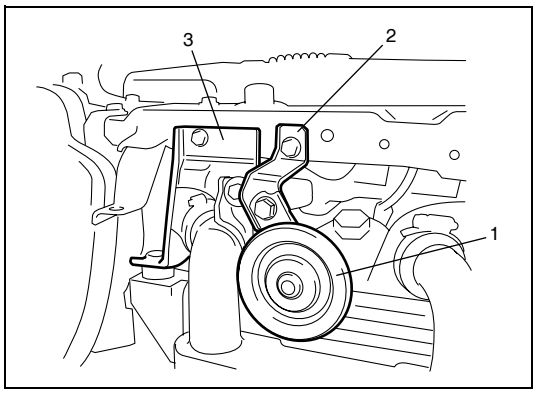

2) Remove horn (1) with its bracket (2) and radiator right side bracket (3).

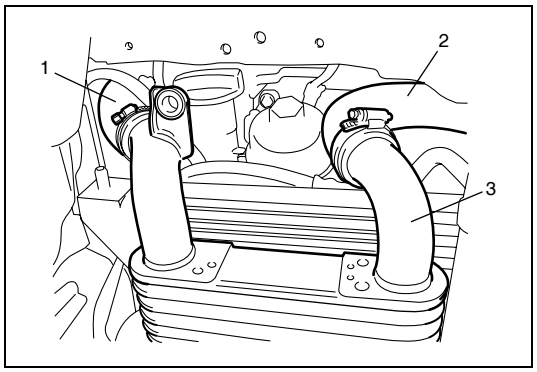

3) Disconnect inter cooler outlet No.1 hose (1) and inlet hose (2) from inter cooler (3).
4) Remove inter cooler from vehicle.

Installation

Reverse removal procedure for installation noting the following.

- Tighten hose clamps (1) to specified torque.

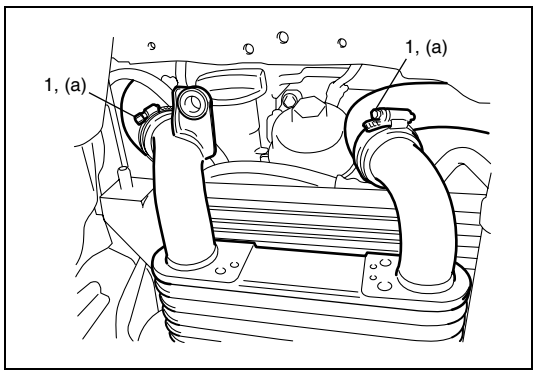

Tightening torque
Inter cooler hose clamp (a): 3 N·m (0.3 kg-m, 2.5 lb-ft)

- Install front bumper referring to “Front Bumper and Rear Bumper Removal and Installation” for RM413D or “Front Bumper and Rear Bumper” for RB413D in Section 9.

Turbocharger Components

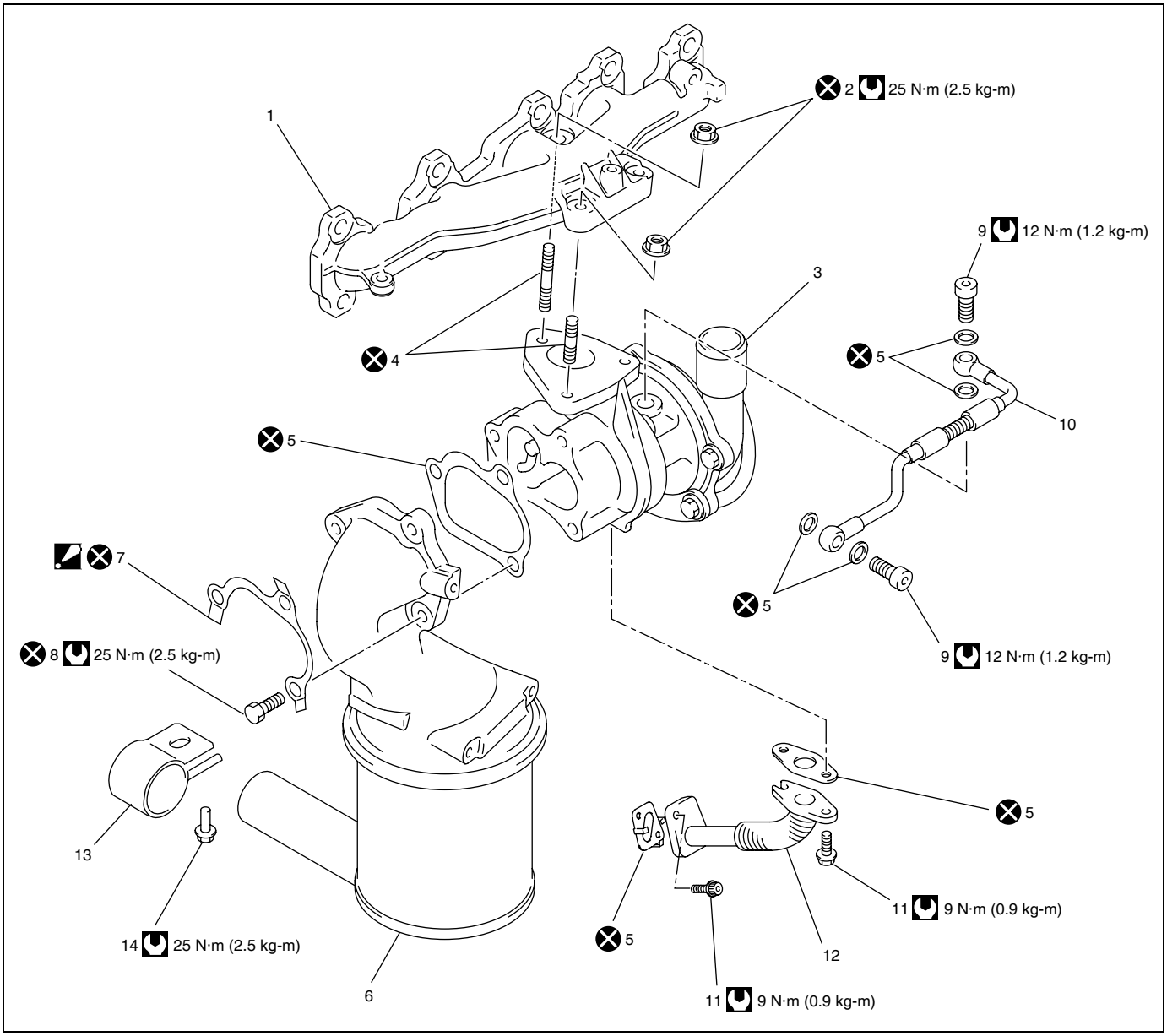

1. Exhaust manifold	7. Lock plate : Bend lock part of lock plate to prevent catalytic converter bolt from loosening.	13. Catalytic converter mount
2. Turbocharger nut	8. Catalytic converter bolt	14. Catalytic converter mounting bolt
3. Turbocharger	9. Union bolt	Tightening torque
4. Stud bolt	10. Turbocharger lubrication pipe	Do not reuse.
5. Gasket	11. Oil return pipe bolt	
6. Catalytic converter	12. Oil return pipe	

Turbocharger Removal and Installation

Removal

WARNING:
To avoid danger of being burned, do not service exhaust system while it is still hot. Service should be performed after system cools down.

1) Disconnect negative (–) cable at battery.
2) Remove air cleaner assembly with MAF sensor assembly referring to “Air Cleaner Assembly Removal and Installation” in this section.

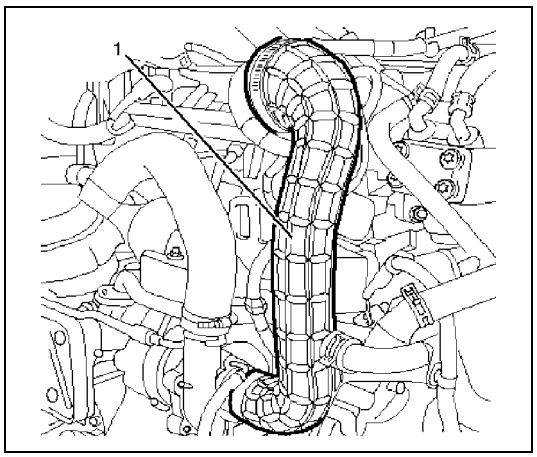

3) Remove air cleaner outlet hose (1) from turbocharger.
4) Remove inter cooler inlet hose referring to “Inter Cooler Removal and Installation” in this section.
5) Remove exhaust manifold side engine hanger referring to “Exhaust Manifold Components” in this section.

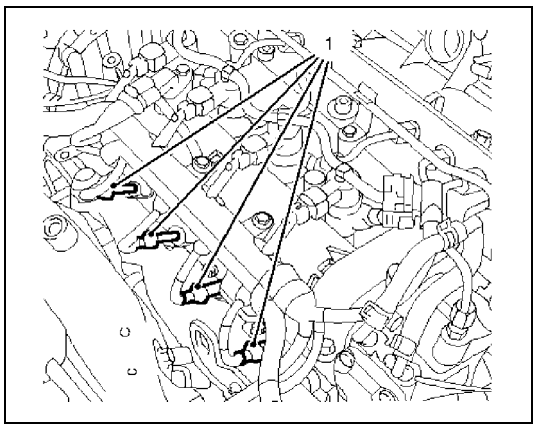

6) Disconnect glow plug connectors (1).

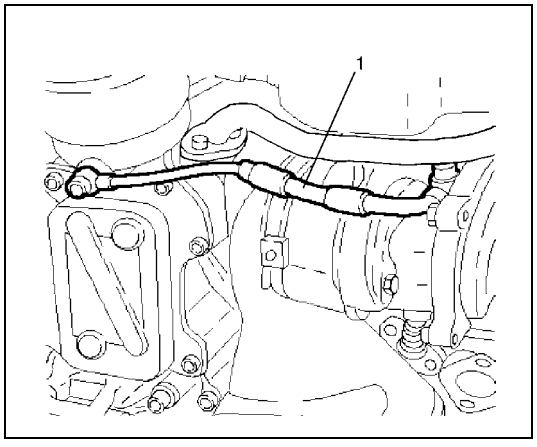

7) Remove lubrication pipe (1).

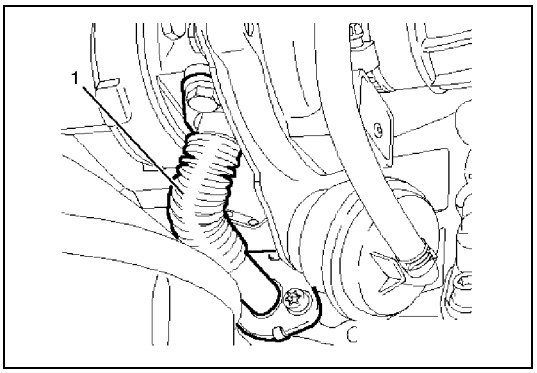

8) Disconnect oil return pipe (1) from cylinder block.

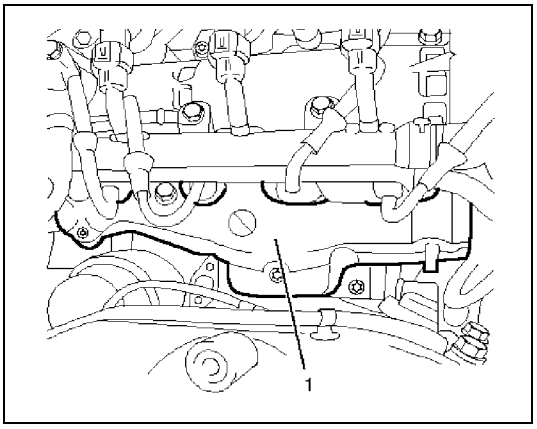

9) Remove exhaust manifold cover (1) from exhaust manifold.
10) Remove exhaust pipe No.1 referring to “Exhaust Pipe Removal and Installation” in Section 6K3.
11) Disconnect stabilizer from cross member referring to “Stabilizer Bar and Bushings Removal and Installation” for RM413D or “Stabilizer Bar and Bushings” for RB413D in Section 3D.

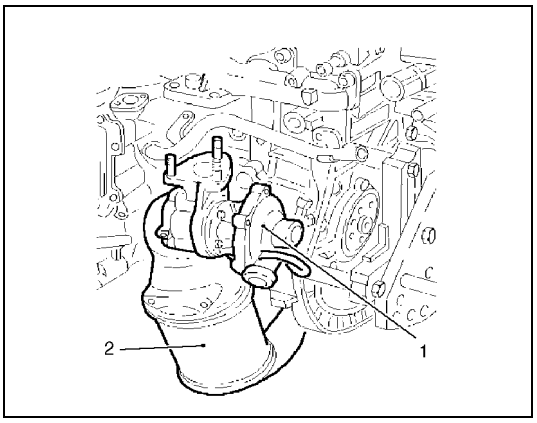

12) Remove turbocharger (1) with catalytic converter (2).

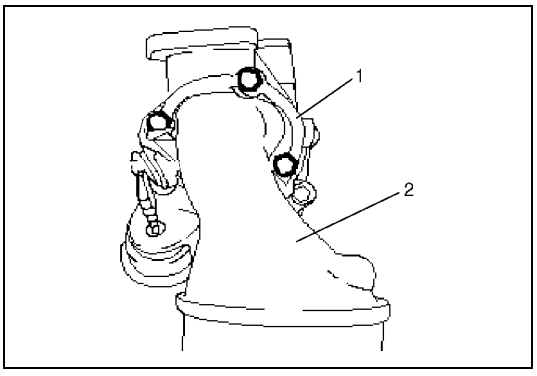

13) Remove catalytic converter (2) from turbocharger after unbending lock plate (1) and loosening bolts.

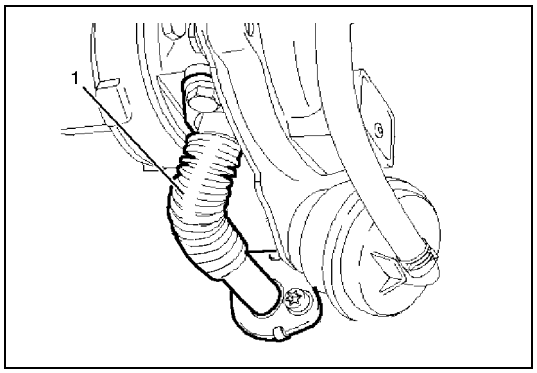

14) Remove oil return pipe (1) from turbocharger.

Installation

NOTE:

Clean mating surfaces of turbocharger, catalytic converter and exhaust manifold.

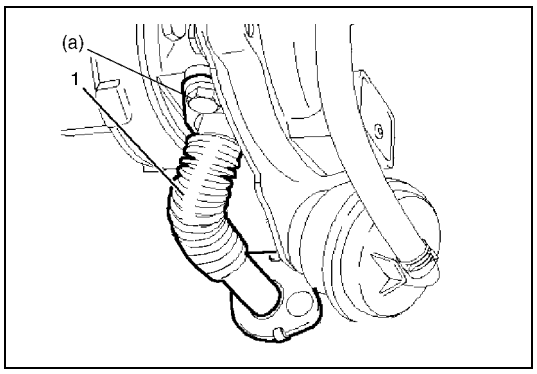

1) Install oil return pipe (1) with new gasket to turbocharger.

Tightening torque
Oil return pipe bolt (a): 9 N·m (0.9 kg-m, 6.5 lb-ft)

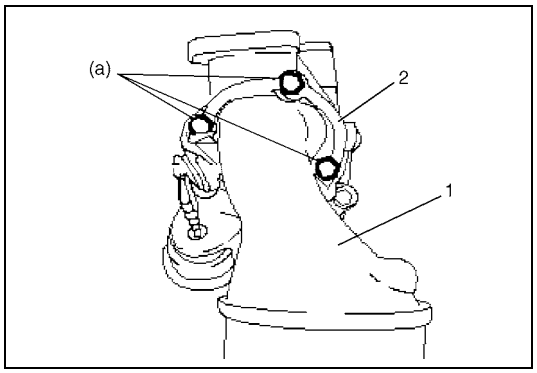

2) Install new gasket, catalytic converter (1) and new lock plate (2) to turbocharger.

Tightening torque
Catalytic converter bolt (a): 25 N·m (2.5 kg-m, 18.0 lb-ft)

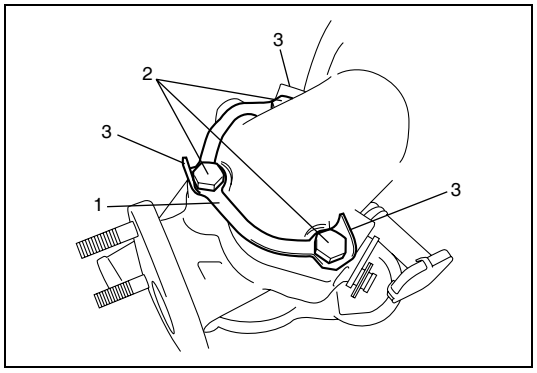

3) Bend claws (3) of lock plate (1) to prevent catalytic converter bolt (2) from loosening.

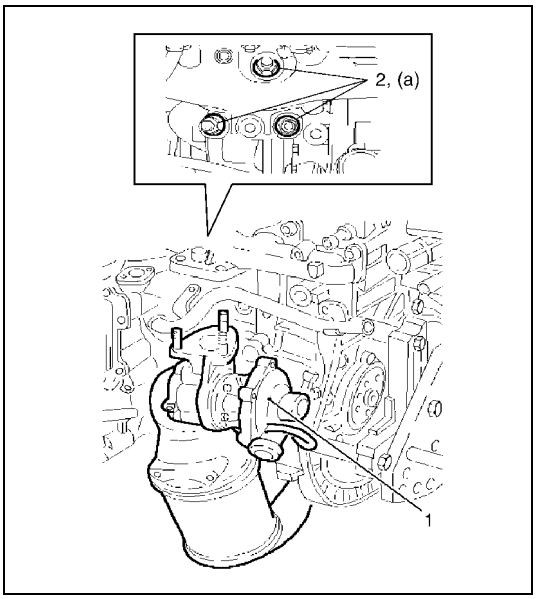

4) Install turbocharger with catalytic converter (1) using new turbocharger nuts (2).

Tightening torque
Turbocharger nut
(a): 25 N·m (2.5 kg-m, 18.0 lb-ft)
Catalytic converter mounting bolt
: 25 N·m (2.5 kg-m, 18.0 lb-ft)

5) Connect stabilizer to cross member referring to “Stabilizer Bar and Bushings Removal and Installation” for RM413D or “Stabilizer Bar and Bushings” for RB413D in Section 3D.

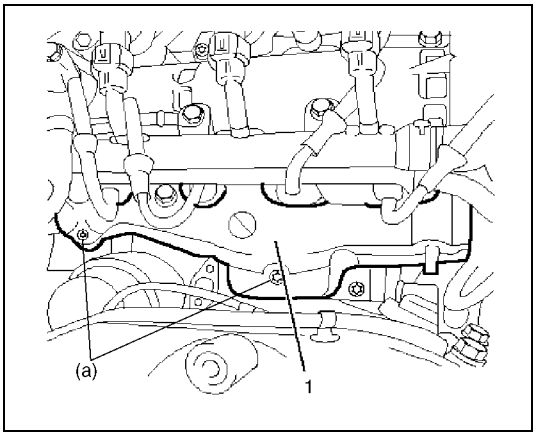

6) Install exhaust manifold cover (1).

Tightening torque
Exhaust manifold cover nut (a): 9 N·m (0.9 kg-m, 7.0 lb-ft)

7) Install exhaust pipe No.1 referring to “Exhaust Pipe Removal and Installation” in Section 6K3.

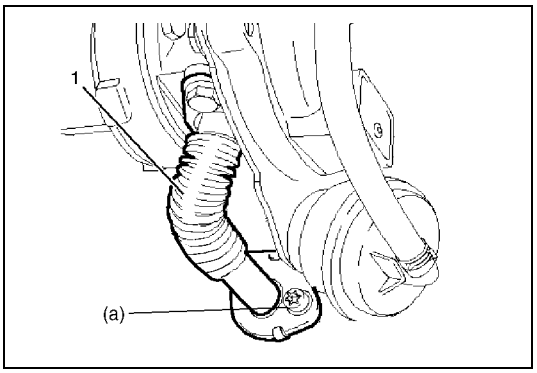

8) Connect return pipe (1) to cylinder block with new gasket.

Tightening torque
Oil return pipe bolt (a): 9 N·m (0.9 kg-m, 7.0 lb-ft)

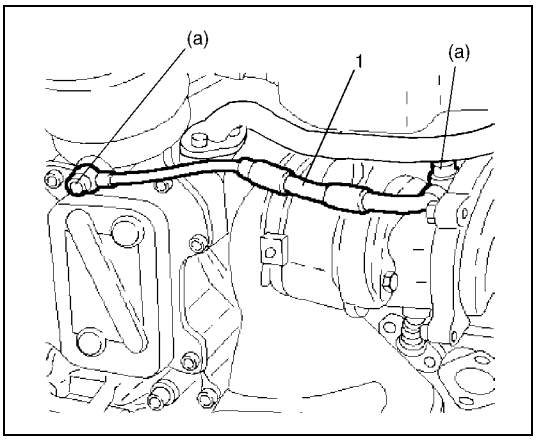

9) Install lubrication pipe (1) with new gasket.

Tightening torque
Lubrication pipe union bolt (a): 12 N·m (1.2 kg-m, 9.0 lb-ft)

10) Install exhaust manifold side engine hanger of referring to “Exhaust Manifold Components” in this section.

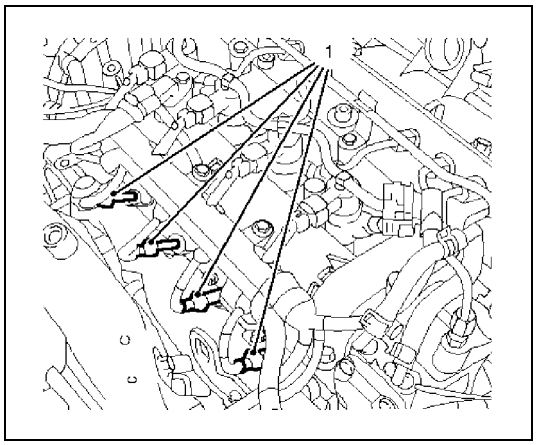

11) Connect glow plug connectors (1).
12) Install inter cooler inlet hose referring to “Inter Cooler Removal and Installation” in this section.

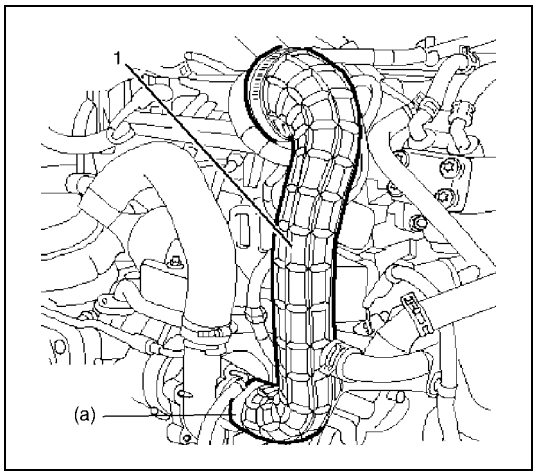

13) Install air cleaner outlet hose (1) to turbocharger and then tighten its clamp to specified torque.

Tightening torque
Air cleaner outlet hose clamp
(a): 3.1 N·m (0.31 kg-m, 2.5 lb-ft)

14) Install air cleaner assembly with MAF sensor assembly, referring to “Air Cleaner Assembly Removal and Installation” in this section.
15) Connect negative (–) cable at battery.
16) Check to make sure that there is no oil leakage and exhaust gas leakage at each connection.

Turbocharger Inspection

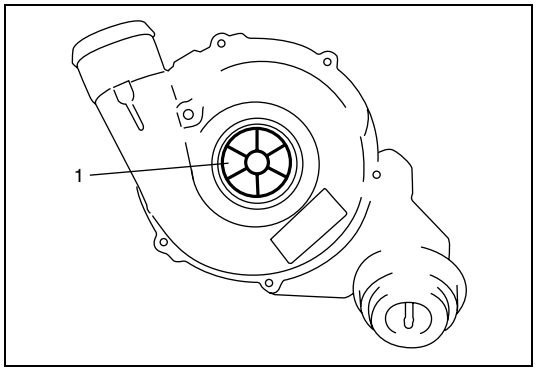

Rotate turbine shaft (1) by hand and verify that it turns smoothly without any abnormal noise and excessive runout.
If a malfunction is found, replace the turbocharger.

Intake Manifold Components

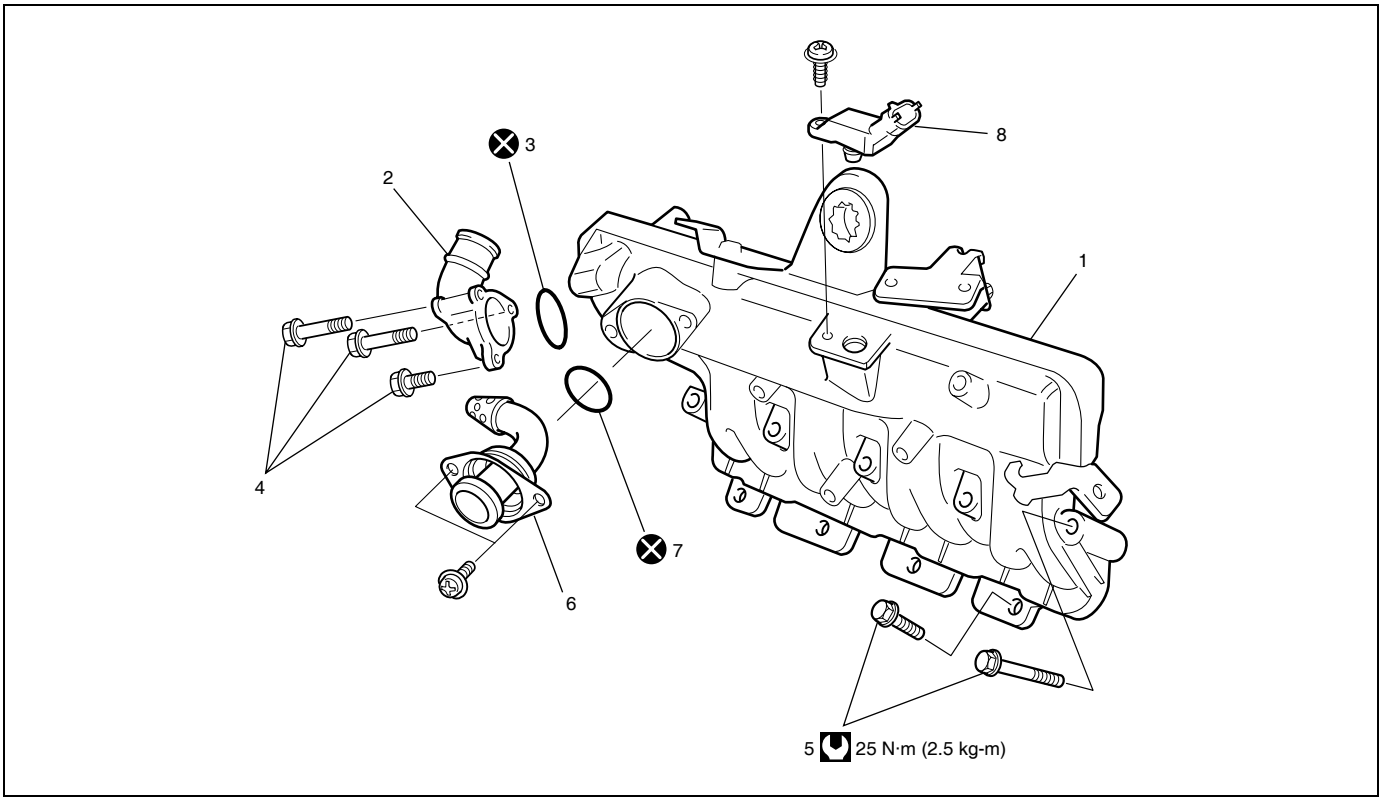

1. Intake manifold	4. Air intake bolt	7. EGR pipe gasket	Tightening torque
2. Air intake joint	5. Intake manifold bolt	8. MAP sensor	Do not reuse.
3. Air intake joint gasket	6. EGR pipe		

Intake Manifold Removal and Installation

Removal

1) Disconnect negative (–) cable at battery.
2) Remove air cleaner assembly with MAF sensor assembly referring to “Air Cleaner Assembly Removal and Installation” in this section.
3) Remove inter cooler outlet No.2 hose referring to “Inter Cooler Components” in this section.
4) Remove EGR valve assembly referring to “EGR valve assembly removal and installation” in Section 6E3.

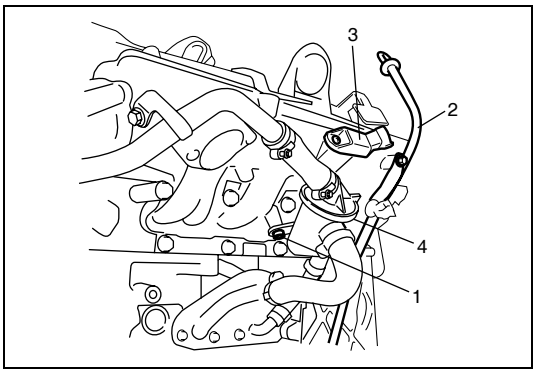

5) Remove oil separator bolt (1) from intake manifold.
6) Remove oil level gauge guide (2) with level gauge.
7) Disconnect connector from MAP sensor (3).

4. Oil separator

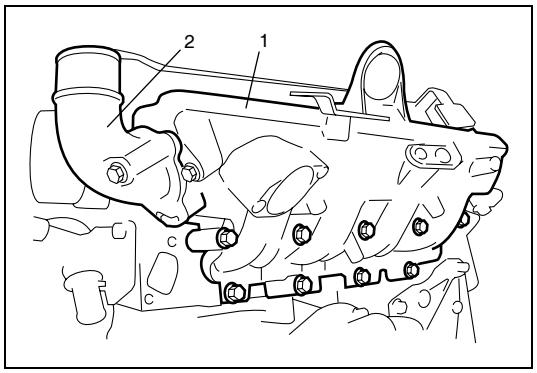

8) Remove intake manifold (1) and gasket from cylinder head.
9) Remove EGR pipe and air intake joint (2) from intake manifold.

Installation

Reverse removal procedure for installation noting the following.

- Clean mating surfaces of intake manifold and cylinder head.
- Use new gasket for intake manifold, air intake joint and EGR pipe.

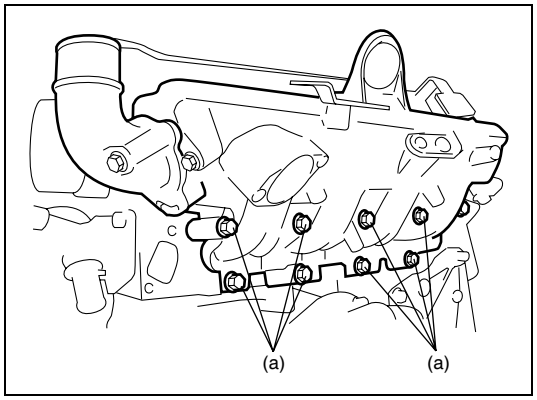

- Tighten intake manifold bolts to specified torque.

Tightening torque
Intake manifold bolt (a): 25 N·m (2.5 kg-m, 18.0 lb-ft)

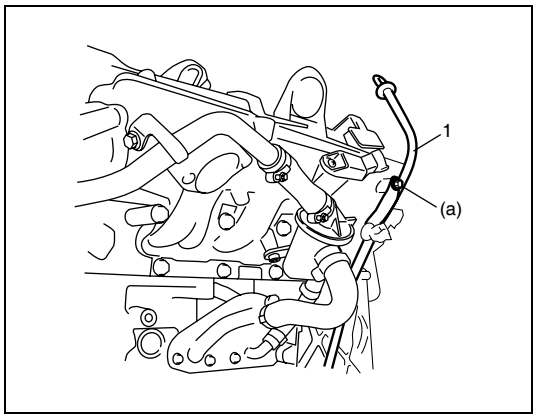

- Install oil level gauge guide (1) with level gauge.

Tightening torque
Oil level gauge guide mounting bolt
(a): 9 N·m (0.9 kg-m, 6.5 lb-ft)

- Install EGR valve assembly referring to “EGR valve assembly removal and installation” in Section 6E3.
- Connect negative (–) cable at battery.
- Check to ensure that all removed parts are back in place. Reinstall any necessary parts which have not been reinstalled.

Exhaust Manifold Components

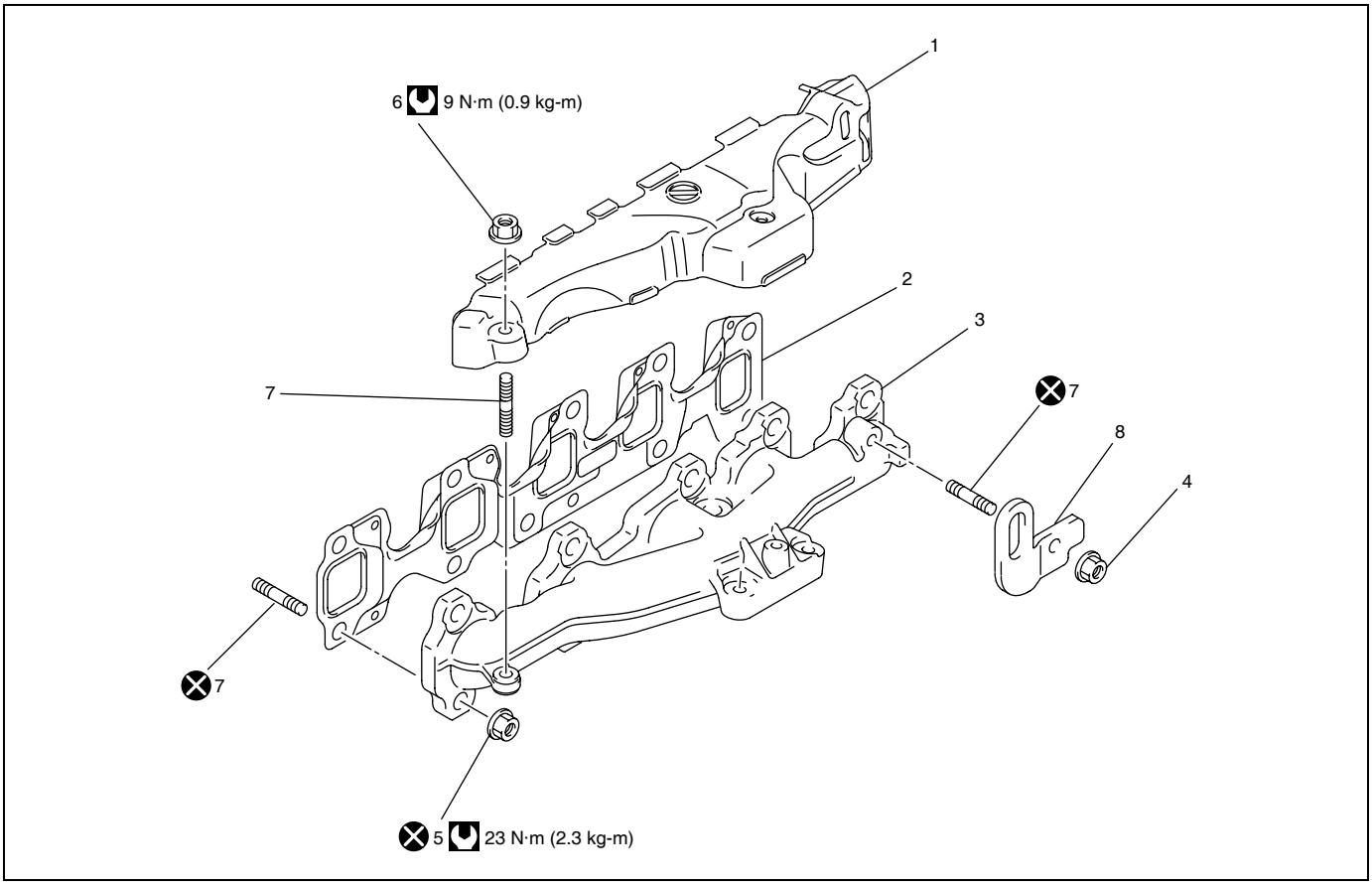

1. Exhaust manifold cover	4. Engine hanger nut	7. Stud bolt	Tightening torque
2. Exhaust manifold gasket	5. Exhaust manifold nut	8. Engine hanger	Do not reuse.
3. Exhaust manifold	6. Exhaust manifold cover nut		

Exhaust Manifold Removal and Installation

Removal

WARNING:
To avoid danger of being burned, do not service exhaust system while it is still hot. Service should be performed after system cools down.

1) Disconnect negative (–) cable at battery.
2) Drain engine coolant referring to “Cooling System Flush and Refill” in Section 6B3.
3) Remove air cleaner assembly with MAF sensor assembly referring to “Air Cleaner Assembly Removal and Installation” in this section.
4) Remove turbocharger referring to “Turbocharger Removal and Installation” in this section.

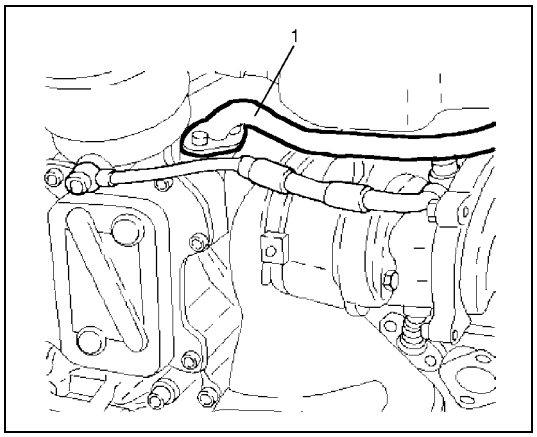

5) Remove coolant feed pipe (1).

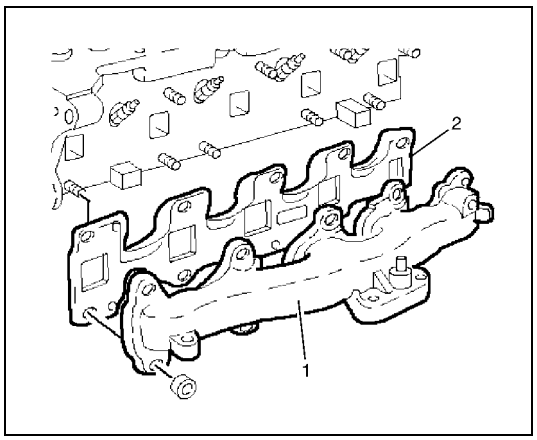

6) Remove exhaust manifold (1) and exhaust manifold gasket (2).

Installation

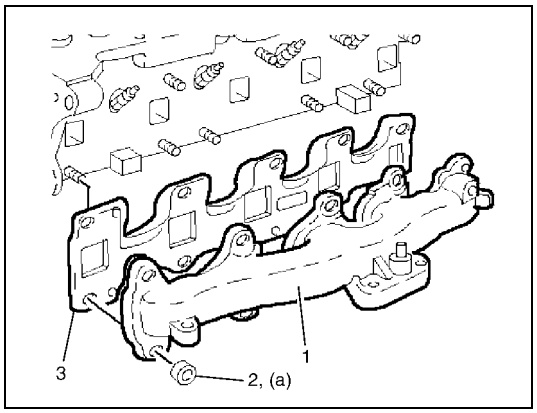

1) Install exhaust manifold (1) with new gasket (3) using new nut (2).

Tightening torque
Exhaust manifold nut (a): 23 N·m (2.3 kg-m, 17.0 lb-ft)

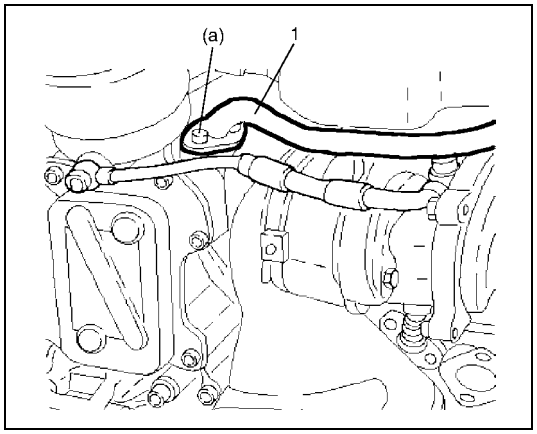

2) Install coolant feed pipe (1).

Tightening torque
Coolant feed pipe bolt (a): 9 N·m (0.9 kg-m, 7.0 lb-ft)

3) Install turbocharger referring to “Turbocharger Removal and Installation” in this section.
4) Install air cleaner assembly with MAF sensor assembly referring to “Air Cleaner Assembly Removal and Installation” in this section.
5) Refill cooling system referring to “Cooling System Flush and Refill” in Section 6B3.
6) Connect negative (–) cable at battery.
7) Check to make sure that there is no oil leakage, coolant leakage and exhaust gas leakage at each connection.

Vacuum Pump Removal and Installation

Refer to “Vacuum pump removal and installation” in Section 6E3 for removal and installation procedure.

Oil Pressure Switch Removal and Installation

Removal

1) Remove air cleaner outlet hose.
2) Disconnect oil pressure switch connector.
3) Remove oil pressure switch (1) and gasket (2) from cylinder head.

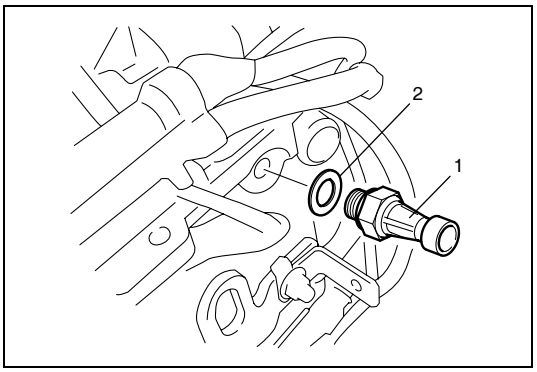

Installation

Reverse removal procedure for installation noting the following.

- Use a new gasket (2).
- Tighten oil pressure switch (1) to specified torque.

Tightening torque
Oil pressure switch (a): 32 N·m (3.2 kg-m, 23.5 lb-ft)

- Check to make sure that there is no engine oil leakage.

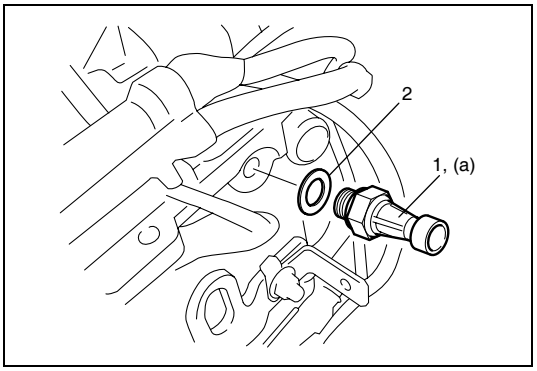

Oil Cooler Components

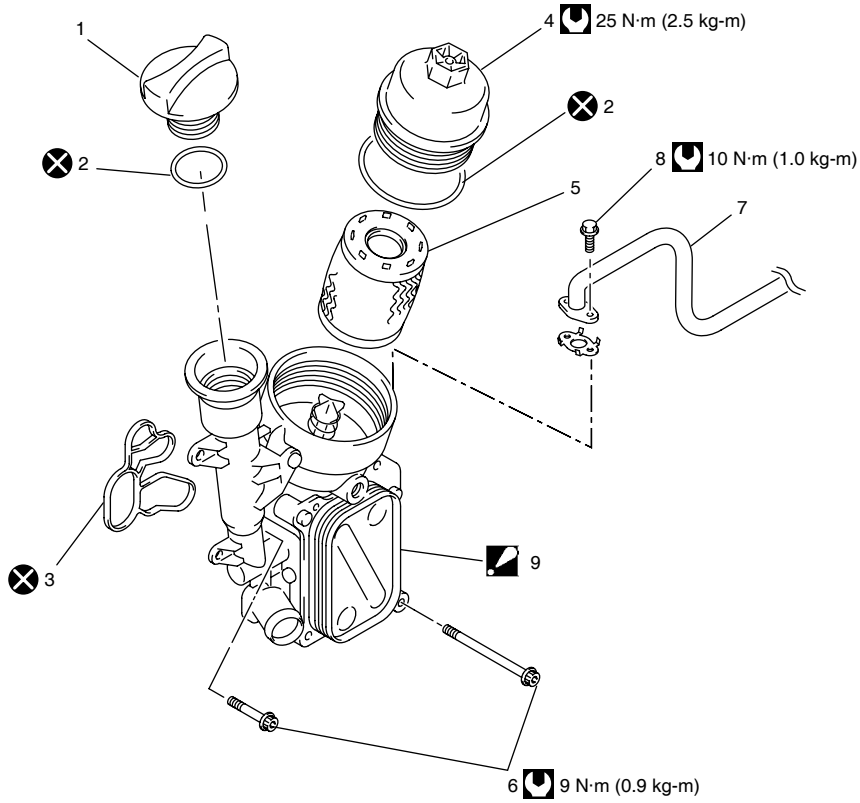

1. Filler cap	4. Oil filter housing cover	7. Coolant feed pipe	Tightening torque
2. O-ring	5. Oil filter	8. Coolant feed pipe bolt	Do not reuse.
3. Gasket	6. Oil cooler bolt	9. Oil cooler assembly : Never disassemble oil cooler assembly.	

Oil Cooler Removal and Installation

CAUTION:
Never disassemble oil cooler assembly.
Disassembly will spoil its original function.
If faulty condition is found, replace it with new one.

Removal

1) Disconnect negative (–) cable at battery.
2) Drain engine coolant referring to “Cooling System Flush and Refill” in Section 6B3.
3) Remove air cleaner assembly with MAF sensor assembly referring to “Air Cleaner Assembly Removal and Installation” in this section.

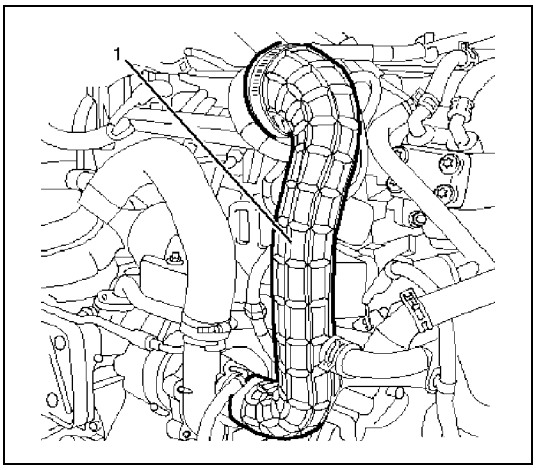

4) Remove air cleaner outlet hose (1).
5) Remove inter cooler inlet hose and outlet No.1 hose referring to “Inter Cooler Removal and Installation” in this section.
6) Remove lubrication pipe referring to “Turbocharger Removal and Installation” in this section.

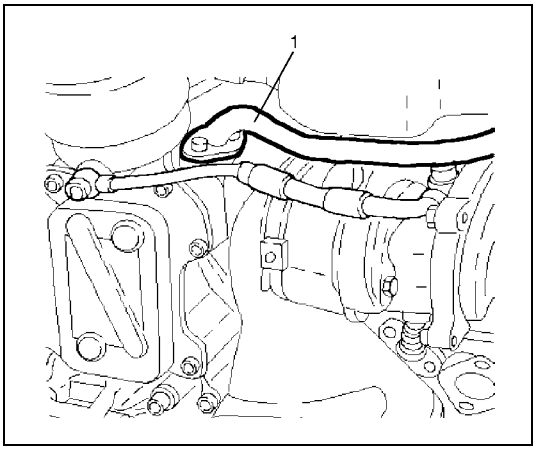

7) Remove coolant feed pipe (1) and radiator outlet hose.

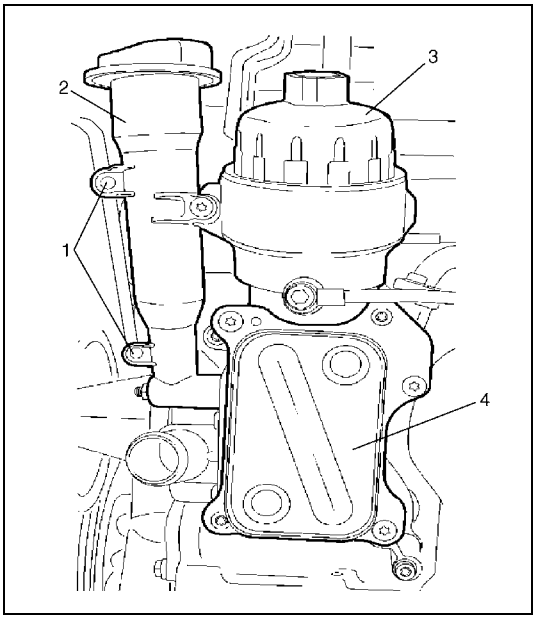

8) Disconnect wire harness clamps (1) from filler port (2).
9) Remove oil filter housing cover (3) and oil filter.
10) Remove oil cooler assembly (4).

Installation

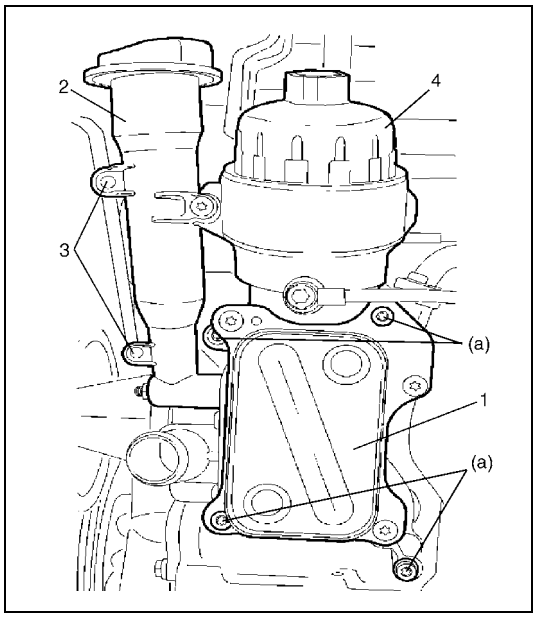

1) Install oil cooler assembly (1) using new gasket.

Tightening torque
Oil cooler bolt (a): 9 N·m (0.9 kg-m,7.0 lb-ft)

2) Connect wire harness clamp (3) to filler port (2).
3) Install oil filter, oil filter housing cover (4) with new O-ring referring to “Engine Oil and Filter Replacement” in Section 0B.

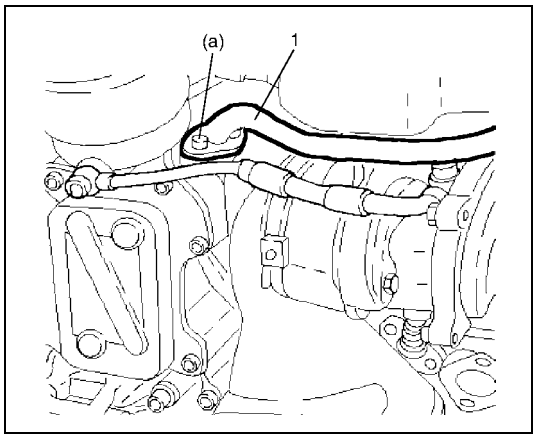

4) Install coolant feed pipe (1) and lower hose.

Tightening torque
Coolant feed pipe bolt (a): 10 N·m (1.0 kg-m, 6.5 lb-ft)

5) Install lubrication pipe referring to “Turbocharger Removal and Installation” in this section.
6) Install inter cooler inlet hose and outlet No.1 hose referring to “Inter Cooler Removal and Installation” in this section.

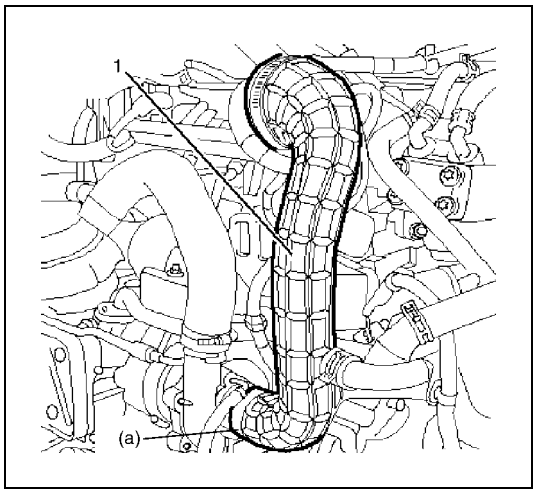

7) Install air cleaner outlet hose (1) to turbocharger.

Tightening torque
Air cleaner outlet hose clamp
(a): 3.1 N·m (0.31 kg-m, 2.5 lb-ft)

8) Install air cleaner assembly with MAF sensor assembly referring to “Air Cleaner Assembly Removal and Installation” in this section.
9) Refill cooling system referring to “Cooling System Flush and Refill” in Section 6B3.
10) Connect negative (–) cable at battery.
11) Check to make sure that there is no oil leakage and coolant leakage at each connection.

Oil Pan Components

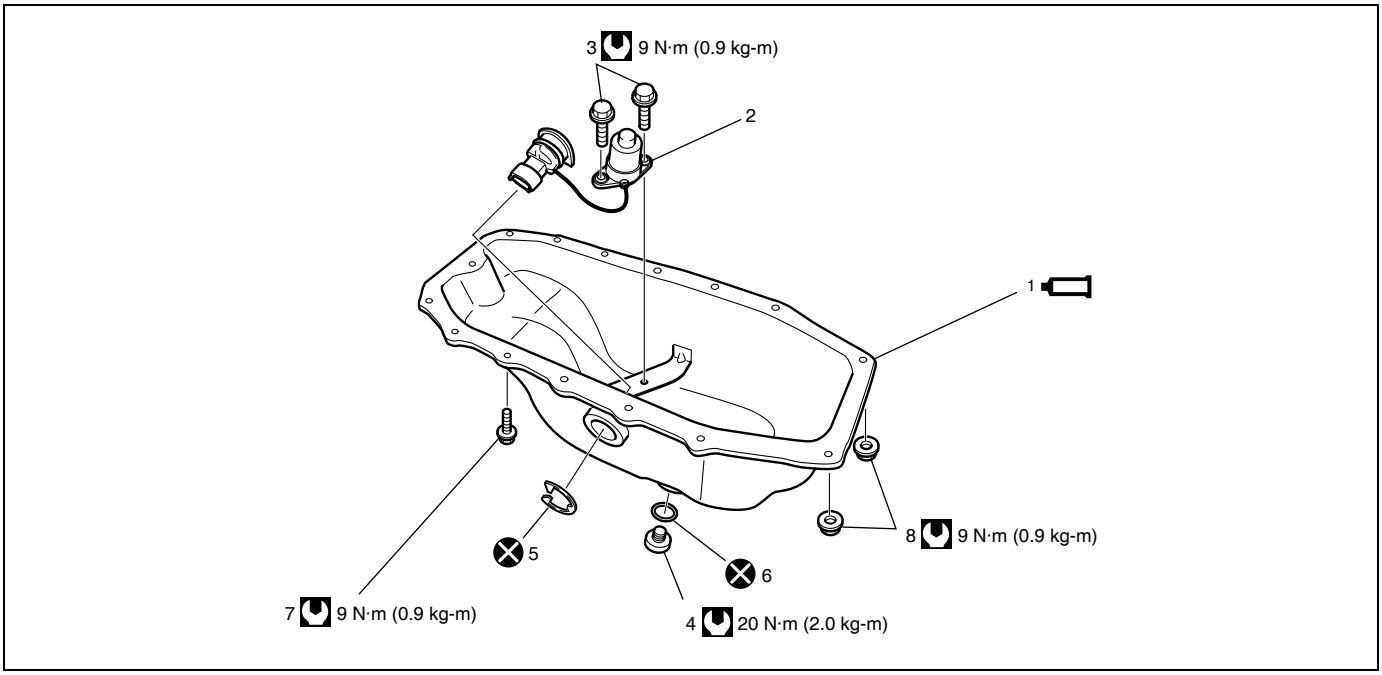

1. Oil pan :Apply Loctite 5900® to mating surface.	4. Drain plug	7. Oil pan bolt	Tightening torque
2. Oil level switch (if equipped)	5. Clip	8. Oil pan nut	Do not reuse.
3. Oil level switch bolt	6. O-ring		

Oil Pan Removal and Installation

Removal

1) Remove oil level gauge.
2) Hoist vehicle.

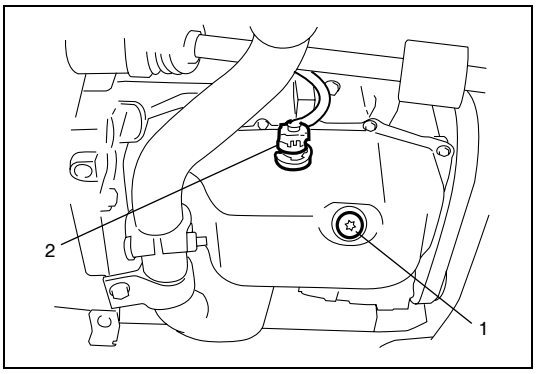

3) Drain engine oil by removing drain plug (1).
4) Disconnect oil level switch connector (2).
5) Remove exhaust No.1 pipe referring to “Exhaust Pipe Removal and Installation” in Section 6K3.
6) Remove transaxle stiffener referring to “Transaxle Unit Dismounting and Remounting” in Section 7A3.

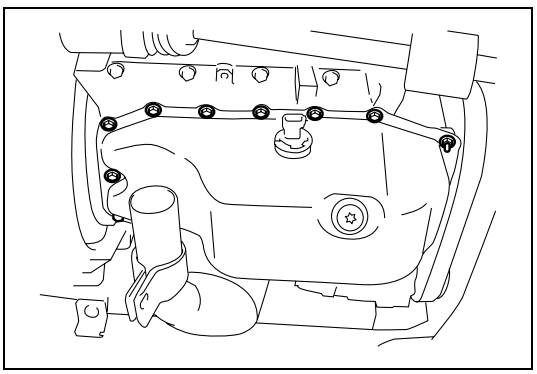

7) Remove oil pan bolts and nuts.

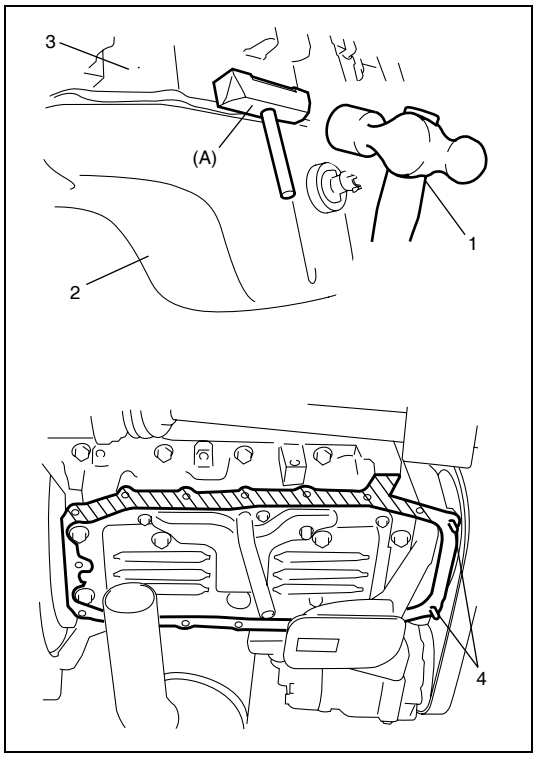

8) Cut sealant at hatched part shown in figure using special tool and hammer (1).

Special tool
(A): 09921-96510

NOTE:

Be careful not to damage stud bolt (4) between oil pan and crankcase when cutting sealant.

9) Remove oil pan (2) from lower crankcase (3).

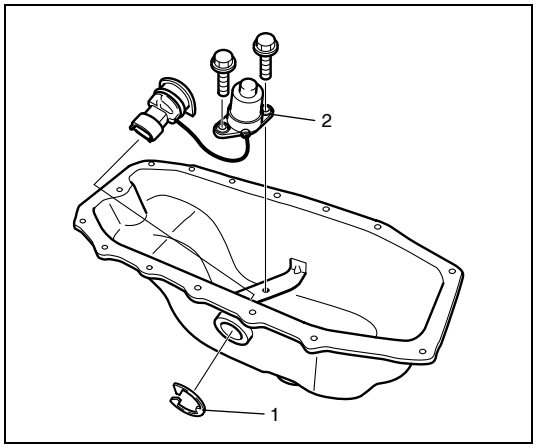

10) Remove clip (1) and oil level switch (2) from oil pan, if necessary.

Installation

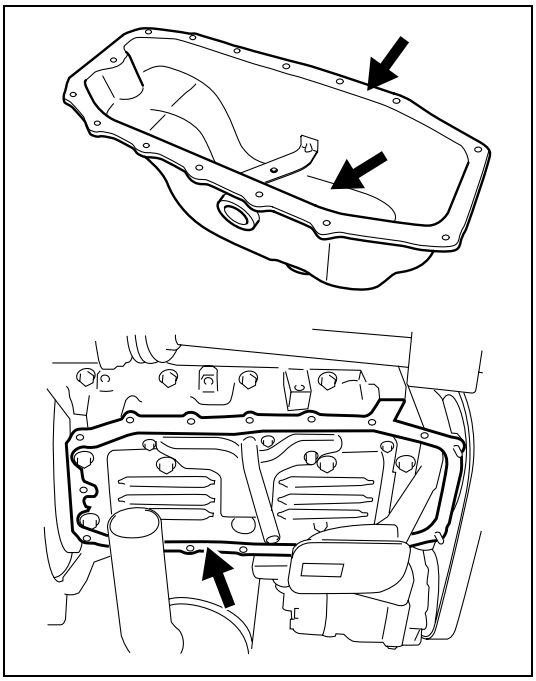

1) Clean mating surfaces of oil pan and lower crankcase.

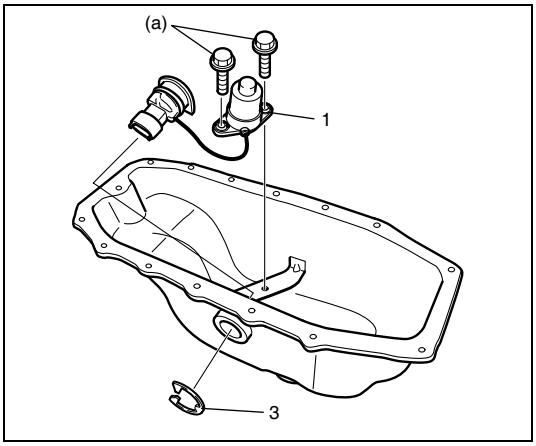

2) Install oil level switch (1) to oil pan, if removed.

Tightening torque
Oil level switch bolt (a): 9 N·m (0.9 kg-m, 6.5 lb-ft)

3) Install new clip (3) to oil level switch connector securely.

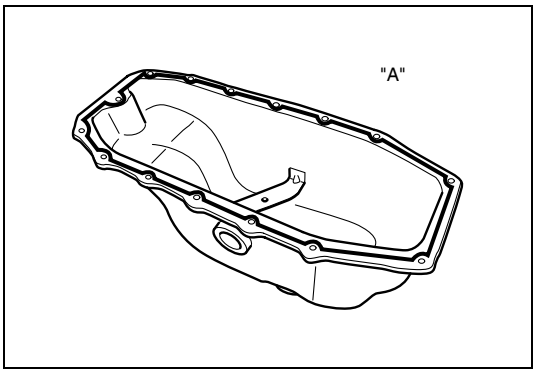

4) Apply sealant to oil pan mating surface continuously as shown in the figure.

"A": Locktite 5900

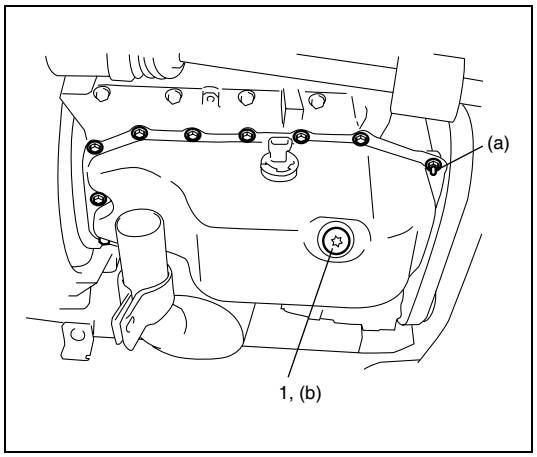

5) After fitting oil pan to lower crankcase, run in securing bolts and start tightening at the center: move wrench outward, tightening one bolt at a time.
   Tighten oil pan bolts and nuts to specified torque.

Tightening torque
Oil pan bolt and nut (a): 9 N·m (0.9 kg-m, 7.0 lb-ft)

6) Install new O-ring and drain plug (1) to oil pan.
   Tighten drain plug to specified torque.

Tightening torque
Drain plug (b): 20 N·m (2.0 kg-m, 14.5 lb-ft)

7) Install transaxle stiffener referring to “Transaxle Unit Dismounting and Remounting” in Section 7A3.
8) Install exhaust No.1 pipe referring to “Exhaust Pipe Removal and Installation” in Section 6K3.
9) Connect oil level switch connector.
10) Install oil level gauge.
11) Refill engine with engine oil referring to “Engine Oil and Oil Filter Replacement” in Section 0B.
12) Check to make sure that there is no engine oil leakage and exhaust gas leakage at each connection.

Unit Repair Overhaul

Engine Assembly Removal and Installation

Removal

1) Relieve fuel pressure referring to “Fuel Pressure Relief Procedure” in Section 6E3.
2) Disconnect negative cable at battery.
3) Remove engine hood after disconnecting windshield washer hose.
4) Drain coolant referring to “Cooling System Flush and Refill” in Section 6B3.
5) For RB413D, remove battery tray with degassing tank.
6) Remove air cleaner assembly with MAF sensor assembly referring to “Air Cleaner Assembly Removal and Installation” in this section.
7) Remove inter cooler inlet hose and inter cooler outlet No.1 and No.2 hoses referring to “Inter Cooler Components” in this section.
8) Disconnect the following cables from transaxle.
   - Clutch cable
   - Gear select control cable
   - Gear shift control cable

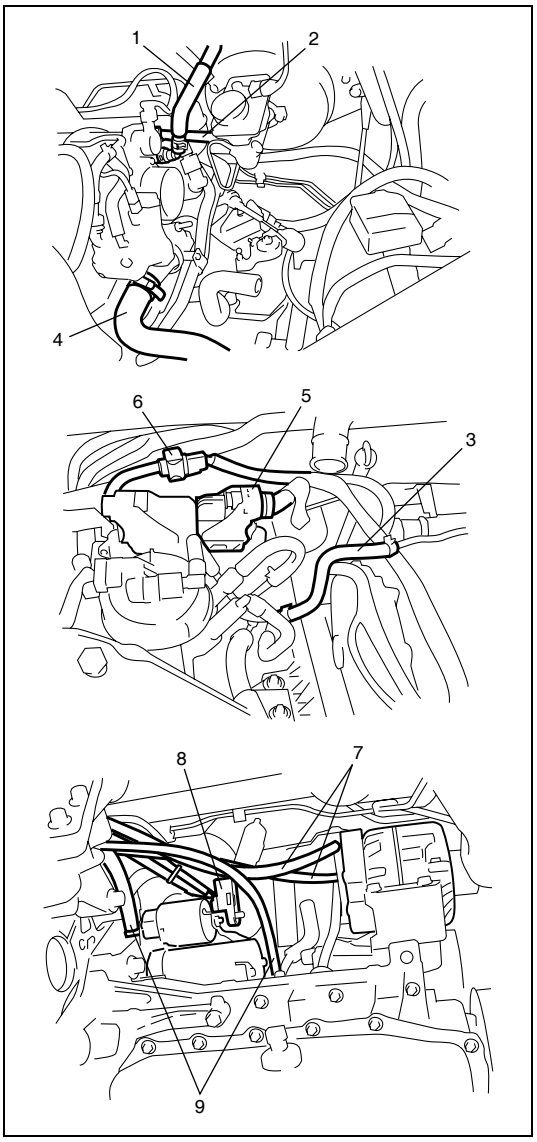

9) Disconnect the following hoses.
   - Brake booster hose (1)
   - Fuel return hose (2)
   - Fuel feed hose (3)
   - Radiator inlet (4) and outlet hoses
   - Heater inlet and outlet hoses
   - Reservoir hoses (for RM413D)
10) Disconnect the following electric lead wires.
   - ECM (5)
   - Injector harness to instrument panel harness (6)
   - Injector harness to main harness
   - Back up light switch
   - Magnet clutch switch of A/C compressor (if equipped)
   - Generator (7)
   - Starting motor (8)
   - Engine oil level sensor
   - Engine ground (9)
   - Each wire harness clamps
11) Remove right and left side engine under covers.
12) Remove water pump and generator drive belt referring to "Water Pump / Generator Drive Belt Removal and Installation" in Section 6B3.
13) With hose connected, detach A/C compressor from its bracket. (if equipped)

NOTE:

Suspend removed A/C compressor at a place where no damage will be caused during removal and installation of engine assembly.

14) Drain engine oil referring to "Engine Oil and Oil Filter Replacement" in Section 0B.
15) Drain transaxle oil referring to "Manual Transaxle Oil Change" in Section 7A3.

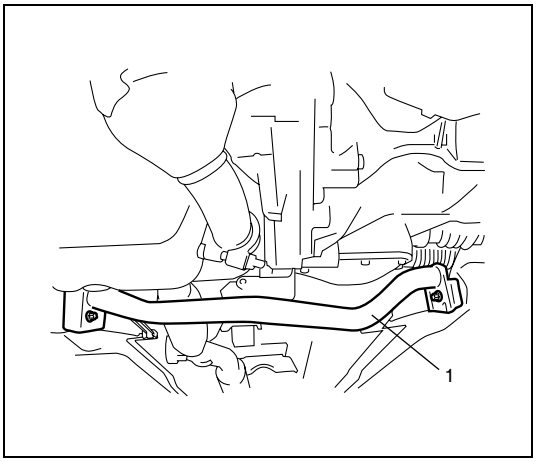

16) For RM413D, remove cross member (1).
17) Remove exhaust No.1 pipe referring to "Exhaust Pipe Removal and Installation" in Section 6K3.
18) Remove stabilizer bar referring to "Stabilizer Bar and Bushings Removal and Installation" for RM413D or "Stabilizer Bar and Bushings" for RB413D in Section 3D.
19) Disconnect right and left drive shaft joints from differential gear referring to "Front Drive Shaft Assembly Removal and Installation" in Section 4A for RM413D or "Front Drive Shaft Assembly Removal and Installation" in Section 4A2 for RB413D.

NOTE:

For engine and transaxle removal, it is not necessary to remove drive shafts from steering knuckle.

20) Support engine with lifting device.

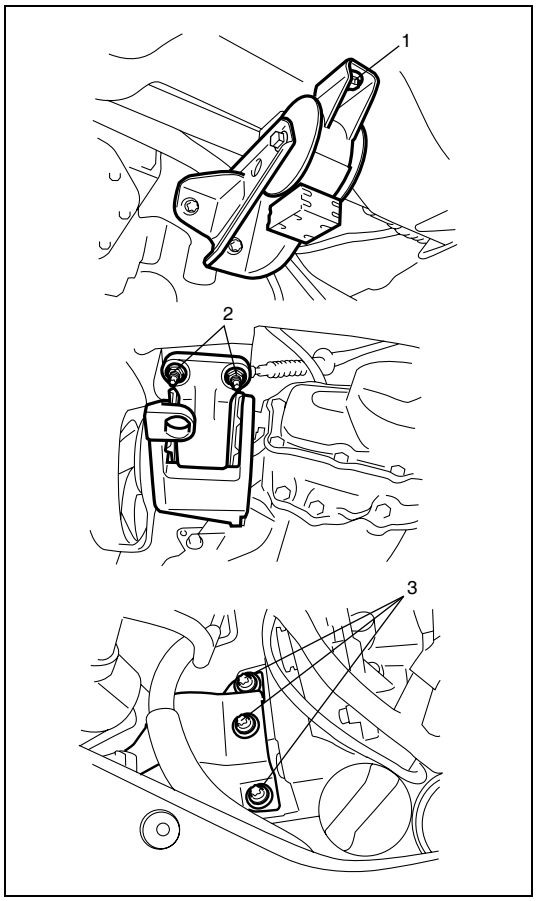

21) Remove engine rear mounting bolts (1), engine left mounting nuts (2) and engine right mounting bracket bolts (3).
22) Before removing engine with transaxle from vehicle, recheck to make sure all hoses, electric wires and cables are disconnected from engine and transaxle.

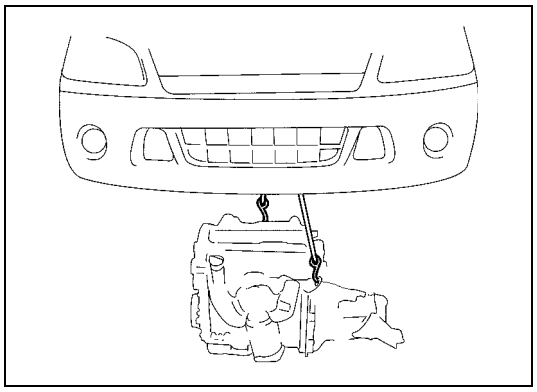

23) Lower engine with transaxle from vehicle.

NOTE:

Before lowering engine, to avoid damage to A/C compressor, raise it through clearance made on engine crankshaft pulley side. At this time, use care so that no excessive force is applied to hoses.

24) Disconnect transaxle from engine referring to “Transaxle Unit Dismounting and Remounting” in Section 7A3.
25) Remove clutch cover and clutch disc referring to “Clutch Cover, Clutch Disc and Flywheel Removal and Installation” in Section 7C3.

Installation

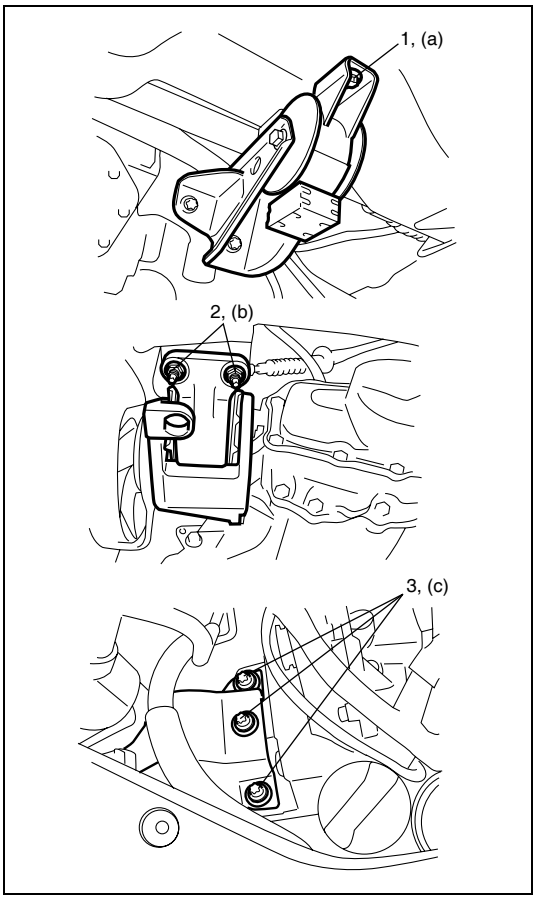

1) Install clutch cover and clutch disc referring to “Clutch Cover, Clutch Disc and Flywheel Removal and Installation” in Section 7C3.
2) Connect transaxle to engine referring to “Transaxle Unit Dismounting and Remounting” in Section 7A3.
3) Lift engine with transaxle into engine compartment, but do not remove lifting device.
4) Install engine rear mounting bolts (1), engine left mounting nuts (2) and engine right mounting bracket bolts (3).
   Tighten these bolts and nuts to specified torque.

Tightening torque
Engine rear mounting bolt
(a): 55 N·m (5.5 kg-m, 40.0 lb-ft)
Engine left mounting nut
(b): 55 N·m (5.5 kg-m, 40.0 lb-ft)
Engine right mounting bracket bolt
(c): 55 N·m (5.5 kg-m, 40.0 lb-ft)

5) Remove lifting device.
6) Connect right and left drive shaft joints to differential gear referring to “Front Drive Shaft Assembly Removal and Installation” in Section 4A for RM413D or “Front Drive Shaft Assembly Removal and Installation” in Section 4A2 for RB413D.
7) Install stabilizer bar referring to “Stabilizer Bar and Bushings Removal and Installation” in Section 3D.
8) Install exhaust No.1 pipe referring to “Exhaust Pipe Removal and Installation” in Section 6K3.

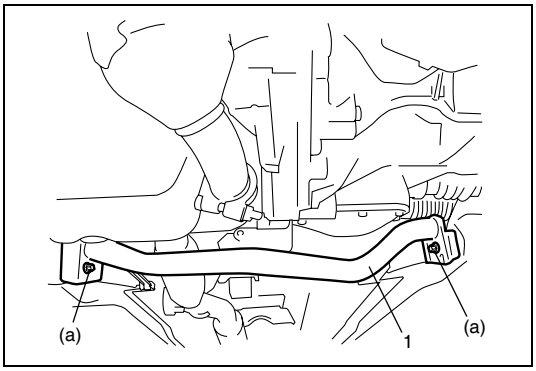

9) For RM413D, install cross member (1).
   Tighten cross member bolts to specified torque.

Tightening torque
Cross member bolt (a): 60 N·m (6.0 kg-m, 43.0 lb-ft)

10) Install A/C compressor to its bracket. (if equipped)
11) Adjust water pump and generator drive belt tension referring to “Water Pump / Generator Drive Belt Tension Inspection” in Section 6B3.
12) Connect hoses, cables and electric wires disconnected in removal procedure.
13) Install inter cooler inlet hose and inter cooler outlet No.1 and No.2 hoses referring to “Inter Cooler Components” in this section.
14) Install air cleaner assembly referring to “Air Cleaner Assembly Removal and Installation” in this section.
15) For RB413D, install battery tray with degassing tank.
16) Check to ensure that all removed parts are back in place. Reinstall any necessary parts which have not been reinstalled.
17) Refill engine oil referring to “Engine Oil and Oil Filter Replacement” in Section 0B.

18) Refill transaxle oil referring to “Manual Transaxle Oil Change” in Section 7A3.
19) Refill coolant referring to “Cooling System Flush and Refill” in Section 6B3.
20) Connect negative cable to battery.
21) Verify that there is no fuel leakage, coolant leakage, oil leakage and exhaust gas leakage at each connection.

Timing Chain Cover and Timing Chain Components

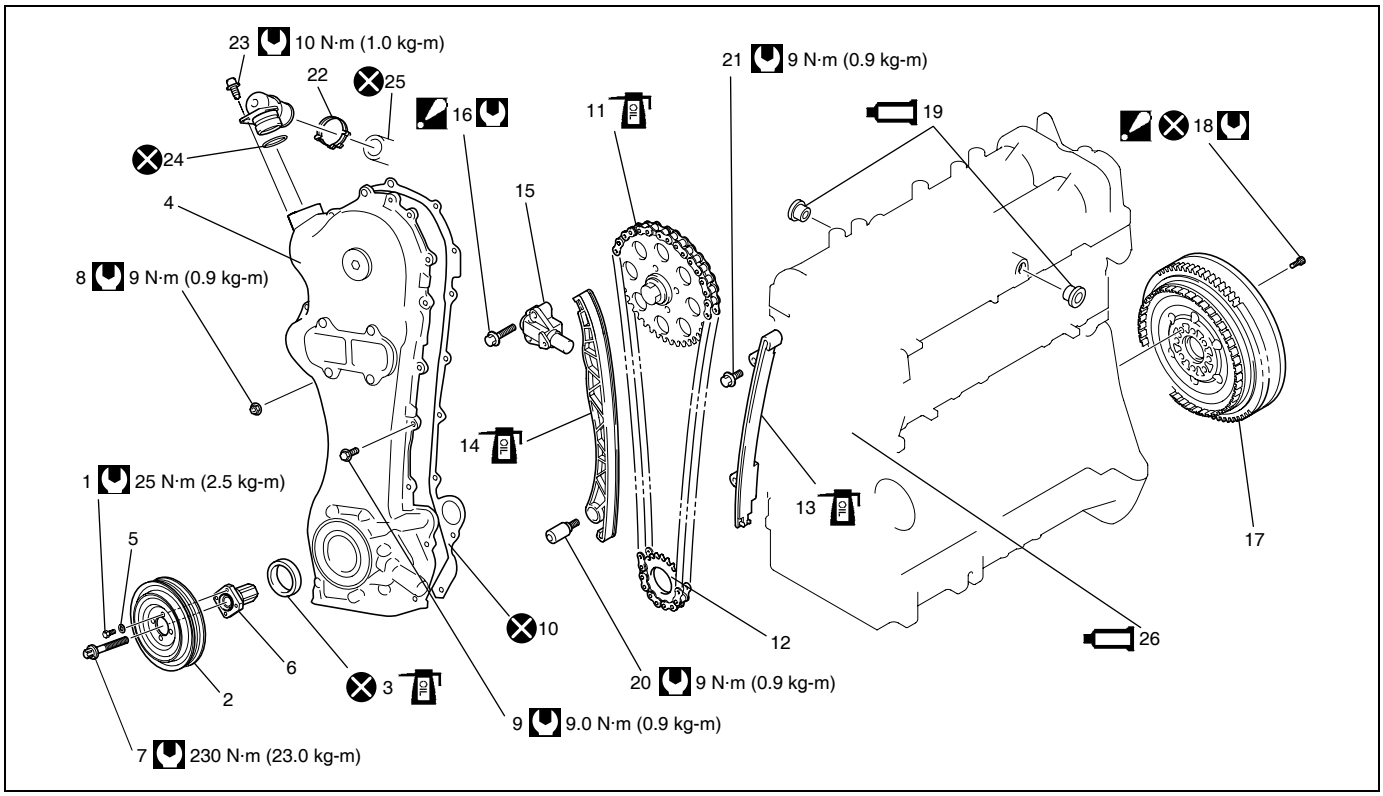

1. Crankshaft pulley bolt	11. Timing chain : Apply engine oil.	21. Chain guide mounting bolt
2. Crankshaft pulley	12. Crankshaft timing sprocket	22. Ventilation connector
3. Crankshaft pulley side crankshaft oil seal : Apply engine oil to oil seal lip.	13. Timing chain guide : Apply engine oil to sliding surface.	23. Ventilation connector bolt
4. Timing chain cover	14. Timing chain tensioner : Apply engine oil to sliding surface.	24. O-ring
5. Washer	15. Timing chain tensioner adjuster	25. Hose clamp
6. Crankshaft pulley flange	16. Chain tensioner adjuster bolt : Tighten 9 N·m (0.9 kg-m, 6.5 lb-ft) by the specified procedure	26. Camshaft housing / cylinder head / cylinder block : Apply Loctite 5900® to mating surfaces between camshaft housing / cylinder head / cylinder block and timing chain cover gasket.
7. Crankshaft pulley flange bolt	17. Flywheel	Tightening torque
8. Timing chain cover nut	18. Flywheel bolt : Tighten 44 N·m (4.4 kg-m, 32.0 lb-ft) by the specified procedure	Do not reuse.
9. Timing chain cover bolt	19. Camshaft housing plug : Apply Loctite omnifit 100M spezial® to thread parts of plug.	
10. Timing chain cover gasket	20. Chain tensioner mounting bolt	

Timing Chain Cover and Timing Chain Removal and Installation

Removal

1) Remove engine assembly from engine compartment referring to “Engine Assembly Removal and Installation” in this section.
2) Remove oil pan referring to “Oil Pan Removal and Installation” in this section.

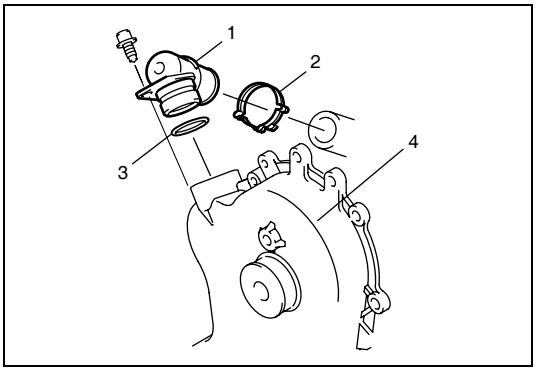

3) Remove ventilation connector (1), hose clamp (2) and O-ring (3) from timing chain cover (4).
4) Remove common rail referring to “Common rail (High pressure fuel injection rail) removal and installation” in Section 6E3.

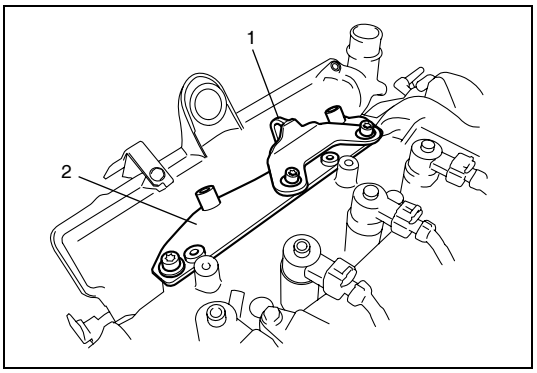

5) Remove engine hook (1) and common rail bracket (2) from camshaft housing.

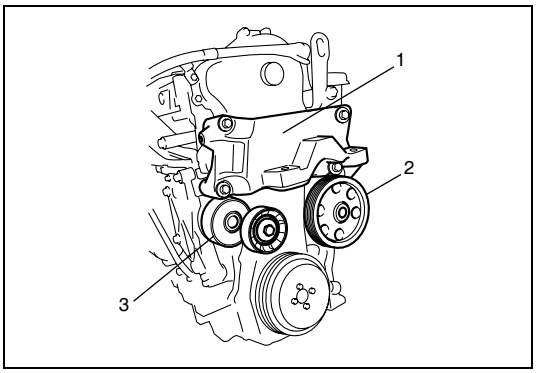

6) Remove engine right mounting bracket (1).
7) Remove water pump assembly (2) referring to “Water Pump Removal and Installation” in section 6B3.
8) Remove water pump / generator drive belt tensioner (3) referring to “Water Pump / Generator Drive Belt Tensioner Assembly Removal and Installation” in section 6B3.

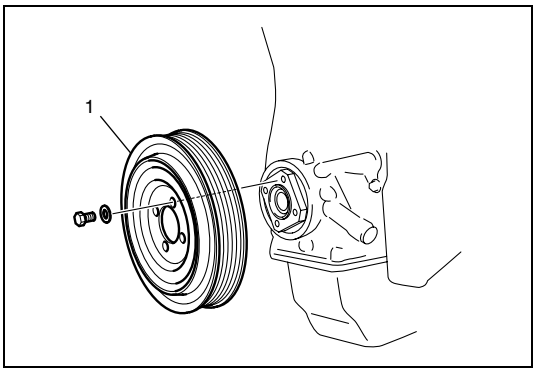

9) Remove crankshaft pulley (1).

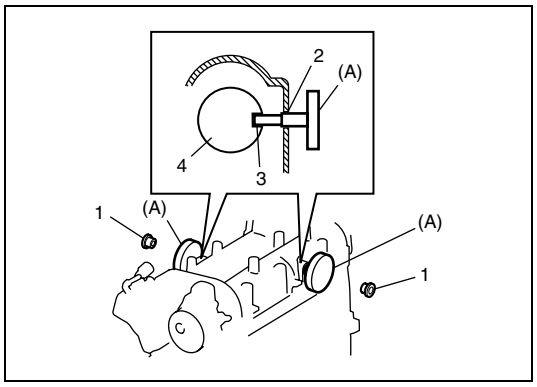

10) Remove camshaft housing plugs (1).
11) Align camshaft housing plug hole (2) with camshaft gap (3) turning crankshaft pulley clockwise as shown in figure.
12) Lock camshafts (4) inserting special tools (A) to plug holes.

Special tool
(A): 09917-68610

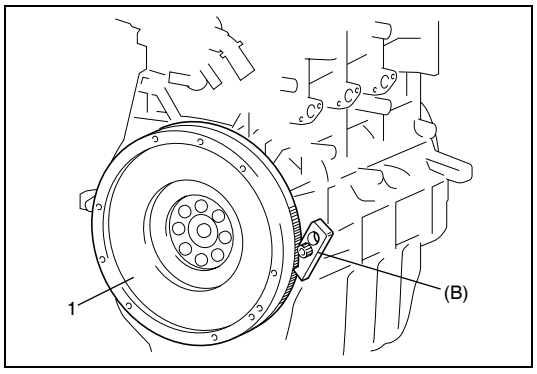

13) Lock flywheel (1) using special tool (B).

Special tool
(B): 09916-98610

14) Remove special tools (A) installed at step 12).

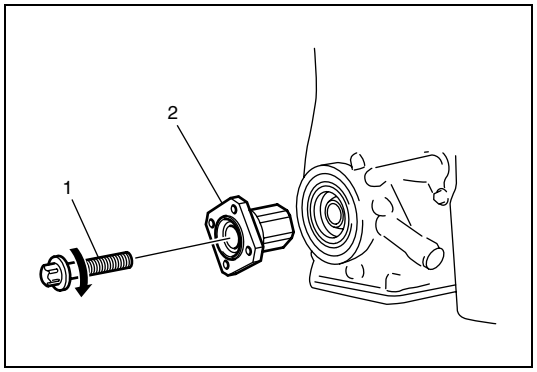

15) Loosen crankshaft pulley flange bolt (1) turning it clockwise, and remove crankshaft pulley flange (2).

NOTE:
Be sure to turn crankshaft pulley flange bolt clockwise in order to loosen it.

16) Reinstall special tools (A) removed at step 14).

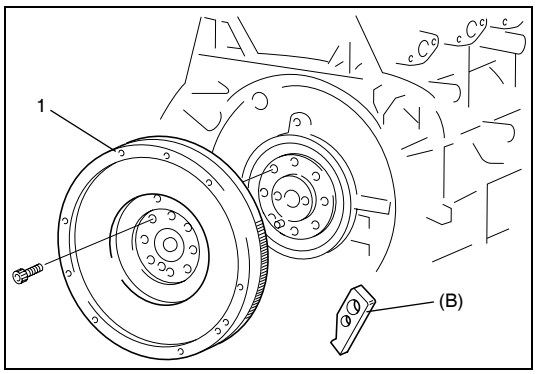

17) Remove flywheel (1), and then special tool (B) installed at step 13).

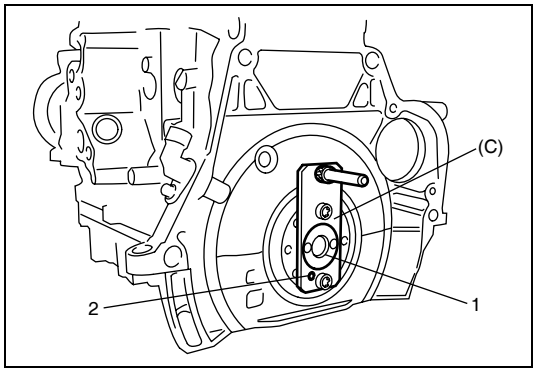

18) Lock crankshaft (1) installing special tool (C) as shown in figure.

NOTE:
Be sure to align hole (2) of special tool with knock pin securely.

Special tool
(C): 09912-38300

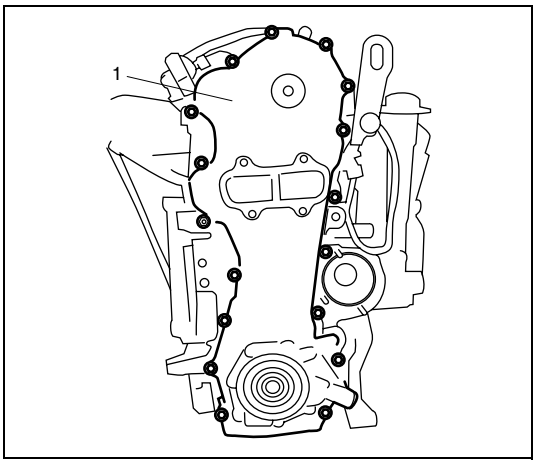

19) Remove timing chain cover (1) and its gasket.

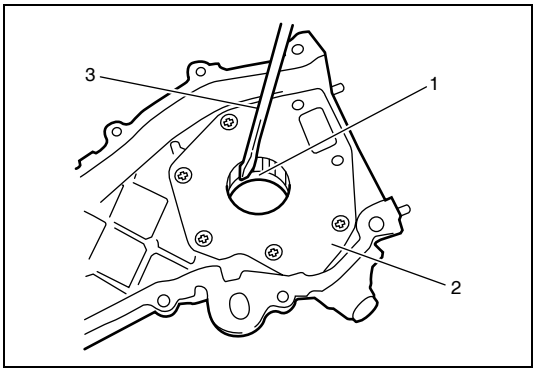

20) Remove crankshaft pulley side crankshaft oil seal (1) from timing chain cover (2) using flat head screw driver (3) or the like, if necessary.

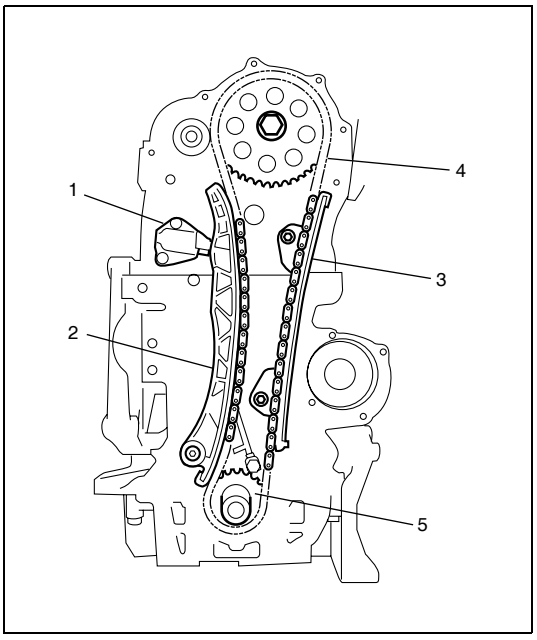

21) Remove timing chain tensioner adjuster assembly (1).
22) Remove timing chain tensioner (2).
23) Remove timing chain guide (3).
24) Remove timing chain (4) with crankshaft timing sprocket (5).

Installation

1) Clean mating surface on timing chain cover, cylinder block, cylinder head, camshaft housing and flywheel.

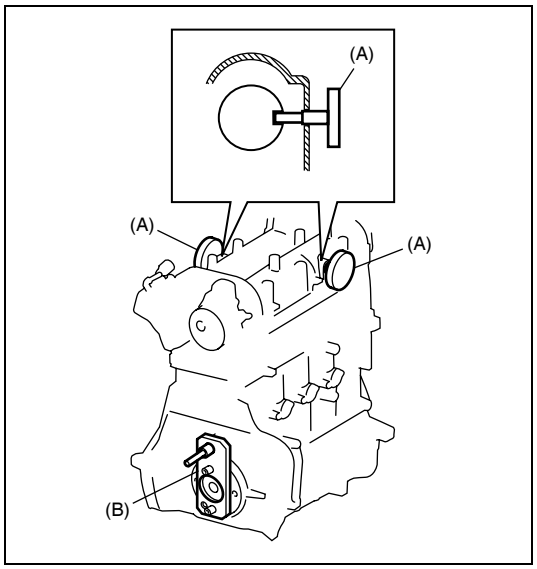

2) Confirm that special tools (A) and (B) are installed.
If special tool(s) is removed, install special tool(s) referring to "Pistons, Piston Rings, Connecting Rods and Cylinder Removal and Installation" in this section or "Camshaft Housing Assembly Disassembly and Reassembly" in this section.

Special tool
(A): 09917-68610
(B): 09912-38300

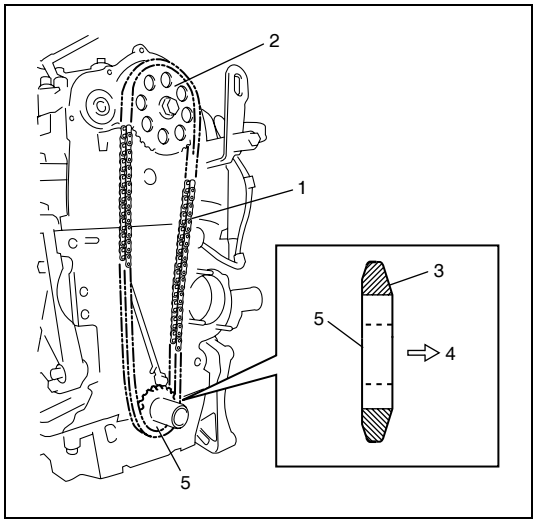

3) Install timing chain (1) to camshaft timing sprocket (2).
4) Install crankshaft timing sprocket (5) to timing chain with its long taper side (3) faced to outside (4) as shown in figure.
5) Insert crankshaft timing sprocket with timing chain to crankshaft.

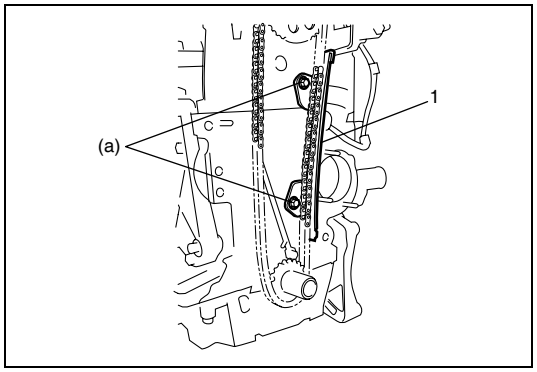

6) Apply engine oil to sliding surface of timing chain guide (1), and install it.

Tightening torque
Chain guide mounting bolt (a): 9 N·m (0.9 kg-m, 6.5 lb-ft)

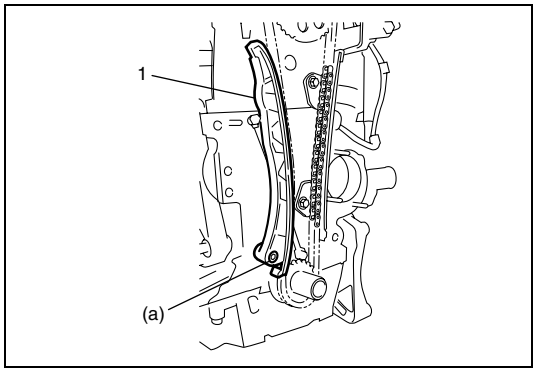

7) Apply engine oil to sliding surface of timing chain tensioner (1), and install it.

Tightening torque
Chain tensioner mounting bolt
(a): 9 N·m (0.9 kg-m, 6.5 lb-ft)

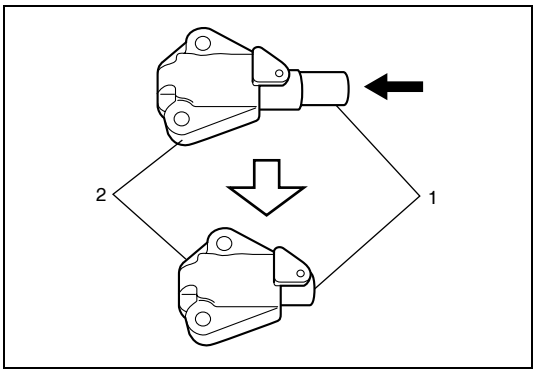

8) Push plunger (1) in timing chain tensioner adjuster body (2) till plunger is held in place as shown in figure.

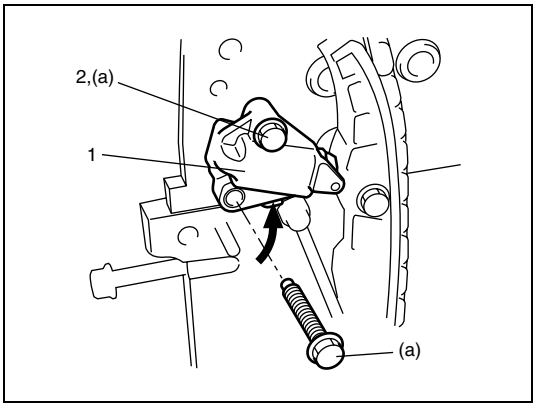

9) Install timing chain tensioner adjuster assembly (1) as follows.
   a) Tighten upper chain tensioner adjuster mounting bolt (2) by hand.
   b) Push tensioner adjuster assembly in arrow direction shown in figure, and then tighten tensioner adjuster bolts to specified torque.

Tightening torque
Chain tensioner adjuster bolt
(a): Tighten 9 N·m (0.9 kg-m, 6.5 lb-ft) by the specified procedure.

10) Apply engine oil to timing chain.

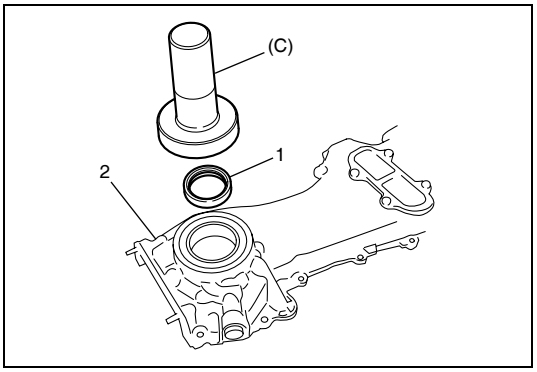

11) Install crankshaft pulley side crankshaft oil seal (1) to timing chain cover (2) using special tool (C) as shown in figure, if removed.

Special tool
(C): 09913-75510

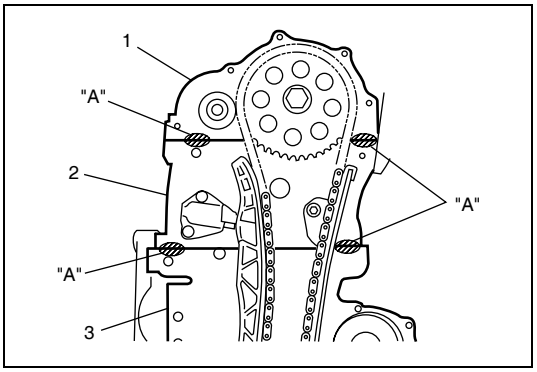

12) Apply sealant to camshaft housing / cylinder head / cylinder block as shown in figure.

"A": Loctite 5900®

1.	Camshaft housing
2.	Cylinder head
3.	Cylinder block

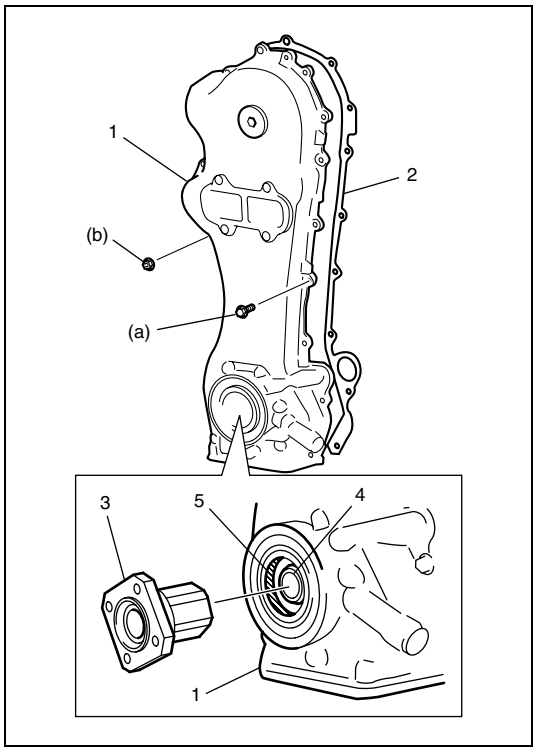

13) Install timing chain cover (1) as follows.
   a) Fit timing chain cover and new gasket (2).
   b) Install crankshaft pulley flange (3).

NOTE:

When inserting crankshaft pulley flange, be careful not to damage to oil seal (5) installed in timing chain cover.

   c) Tighten timing chain cover bolts and nuts to specified torque.

Tightening torque
Timing chain cover bolt (a): 9.0 N·m (9.0 kg-m, 6.5 lb-ft)
Timing chain cover nut (b): 9.0 N·m (9.0 kg-m, 6.5 lb-ft)

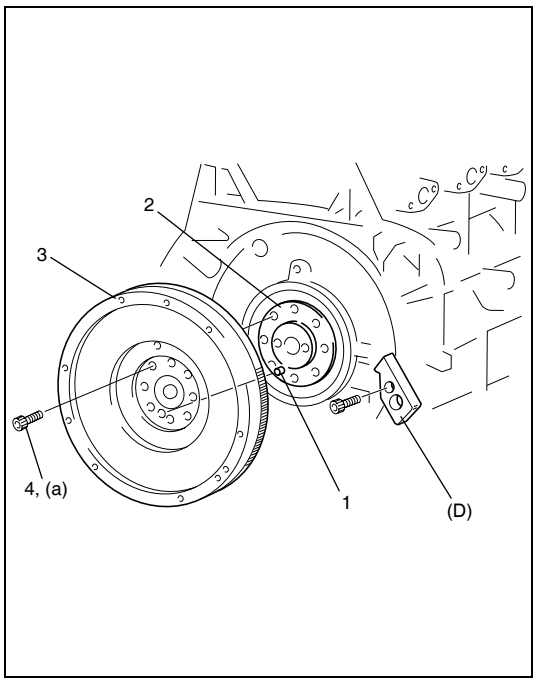

14) Install knock pin (1) to crankshaft (2), if removed.

NOTE:

Be sure to install knock pin to ϕ 6.75 mm (0.266 in.) hole of crankshaft.

15) Remove special tool (B) confirmed at step 2).
16) Install flywheel (3) as follows.
   a) Tighten new flywheel mounting bolts (4) by hand.
   b) Lock flywheel using special tool (D).

Special tool
(D): 09916-98610

   c) Tighten new flywheel bolts to specified torque.

Tightening torque
Flywheel bolts
(a): Tighten 44 N·m (4.4 kg-m, 32.0 lb-ft) by the specified procedure

17) Remove special tools (A) confirmed at step 2).

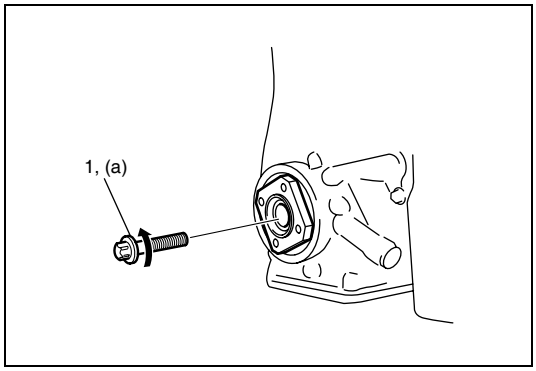

18) Tighten crankshaft pulley flange bolt (1) turning it counter-clockwise.

Tightening torque
Crankshaft pulley flange bolt
(a): 230 N·m (23.0 kg-m, 166.5 lb-ft)

19) Remove special tool (D) installed at step 16).

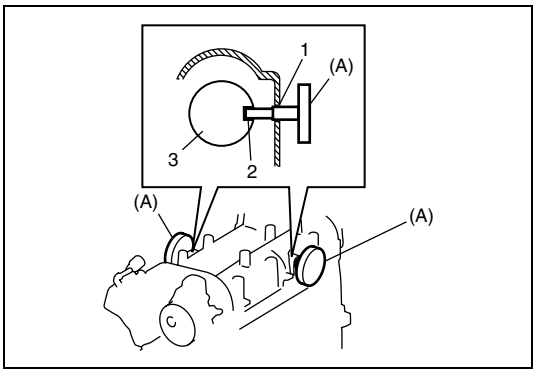

20) Turn crankshaft two revolutions clockwise.
21) Lock camshafts (3) inserting special tools (A) to camshaft housing plug holes after aligning camshaft housing plug hole (1) with camshaft gap (2) as shown in figure.

Special tool
(A): 09917-68610

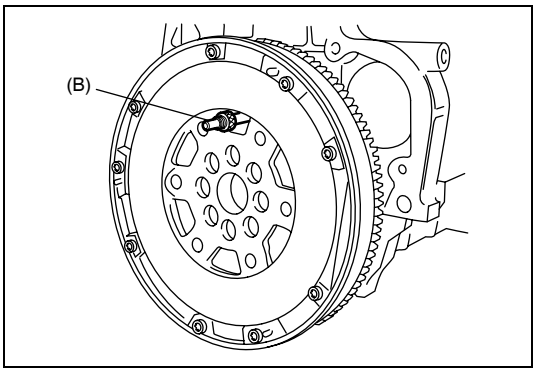

22) Check that special tool (B) can be inserted in holes of flywheel and cylinder block smoothly.
If not, remove timing chain and flywheel and repeat step 2) to 21).

Special tool
(B): 09912-38300

23) Remove special tools (A) installed at step 21) and (B) installed at step 22).

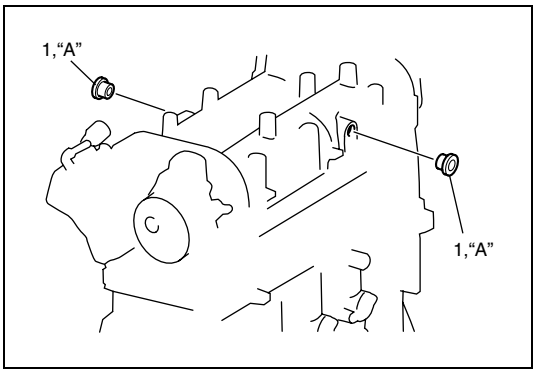

24) Apply thread lock compound to thread part of camshaft housing plugs (1), and install them.

"A": Loctite omnifit 100M spezial®

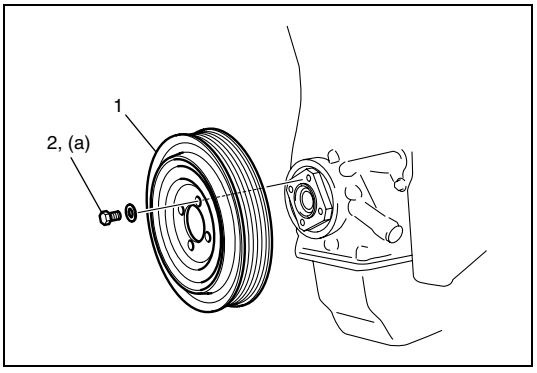

25) Install crankshaft pulley (1), and tighten crankshaft pulley bolts (2) to specified torque.

Special tool
Crankshaft pulley bolt (a): 25 N·m (2.5 kg-m, 18.0 lb-ft)

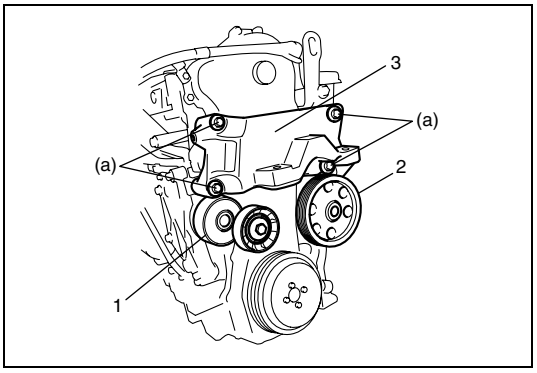

26) Install water pump / generator drive belt tensioner (1) referring to "Water Pump / Generator Drive Belt Tensioner Assembly Removal and Installation" in section 6B3.
27) Install water pump assembly (2) referring to "Water Pump Removal and Installation" in section 6B3.
28) Install engine right mounting bracket (3).

Tightening torque
Engine right mounting bracket No.2 bolt
(a): 60 N·m (6.0 kg-m, 43.5 lb-ft)

29) Install oil pan referring to “Oil Pan Removal and Installation” in this section.

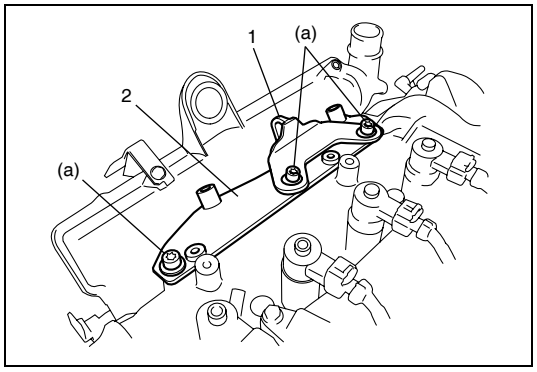

30) Install common rail bracket (2) and engine hook (1) to camshaft housing.
Tighten common rail bracket bolts to specified torque.

Tightening torque
Common rail bracket bolt (a): 25 N·m (2.5 kg-m, 18.0 lb-ft)

31) Install common rail referring to “Common rail (High pressure fuel injection rail) removal and installation” in Section 6E3.

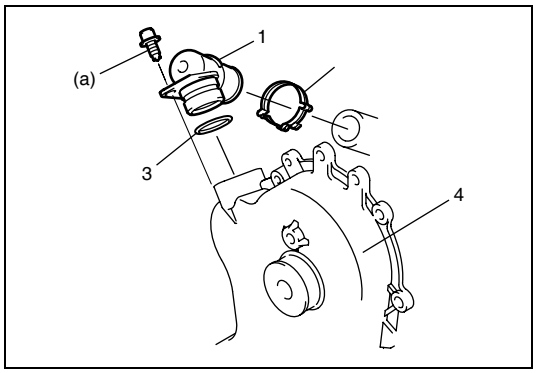

32) Install ventilation connector (1), new hose clamp (2) and new O-ring (3) to timing chain cover (4).

Tightening torque
Ventilation connector bolt (a): 10 N·m (1.0 kg-m, 7.5 lb-ft)

33) Install engine assembly to engine compartment referring to “Engine Assembly Removal and Installation” in this section.

Timing Chain Cover and Timing Chain Inspection

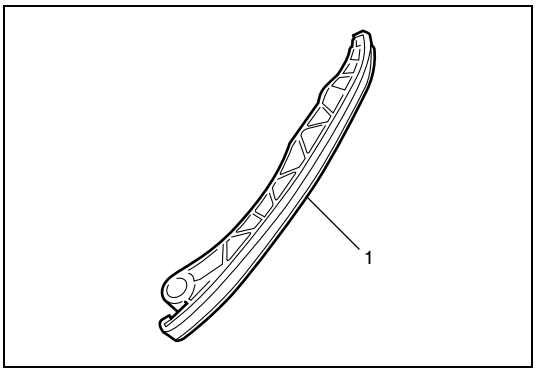

Timing Chain Tensioner

Check shoe (1) for wear or damage.
If any malcondition is found, replace timing chain tensioner.

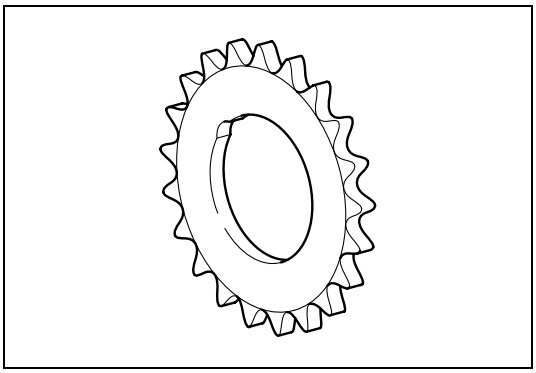

Crankshaft Timing Sprocket

Check teeth of sprocket for wear or damage.
If any malcondition is found, replace crankshaft timing sprocket.

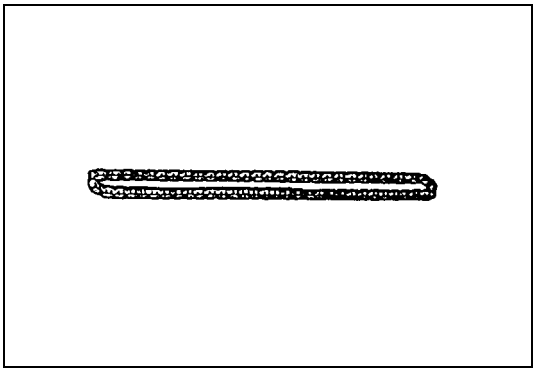

Timing Chain

Check timing chain for wear or damage.
If any malcondition is found, replace timing chain.

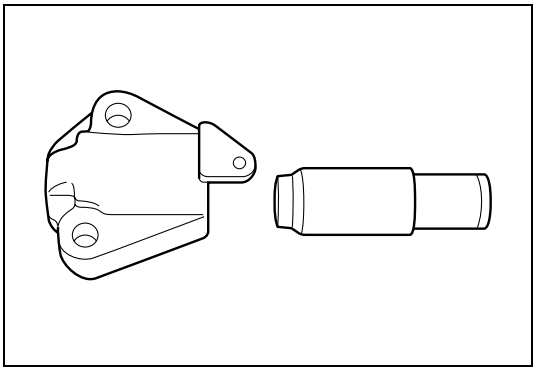

Timing Chain Tensioner Adjuster

Check that sliding surfaces are free from damage.
If any malcondition is found, replace timing chain tensioner adjuster.

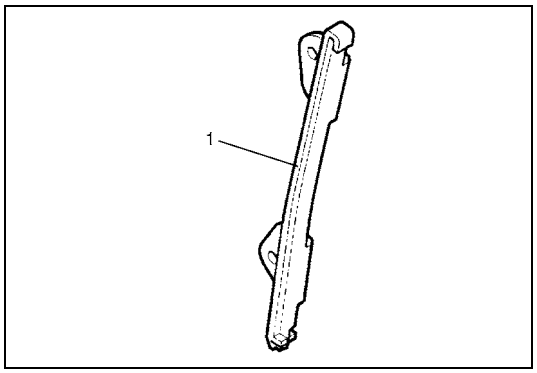

Timing Chain Guide

Check shoe (1) for wear or damage.
If any malcondition is found, replace timing chain guide.

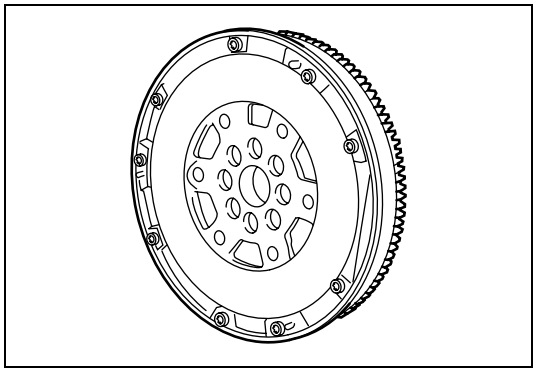

Flywheel

- Check gear for crack or wear.
  If malcondition is found, replace flywheel.
- Check surface for damage or excessively wear.
  If malcondition is found, replace flywheel.

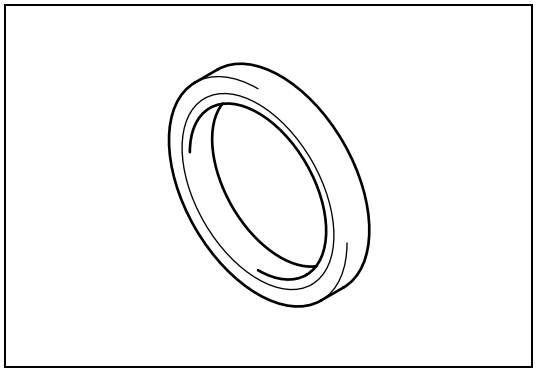

Crankshaft Pulley Side Crankshaft Oil Seal

Check oil seal lip for fault or damage.
Replace as necessary.

Oil Pump / Oil Pump Strainer Components

CAUTION:

Do not disassemble oil pump from timing chain cover. Disassembly will spoil its original function. If any malcondition is found in oil pump, replace timing chain cover.

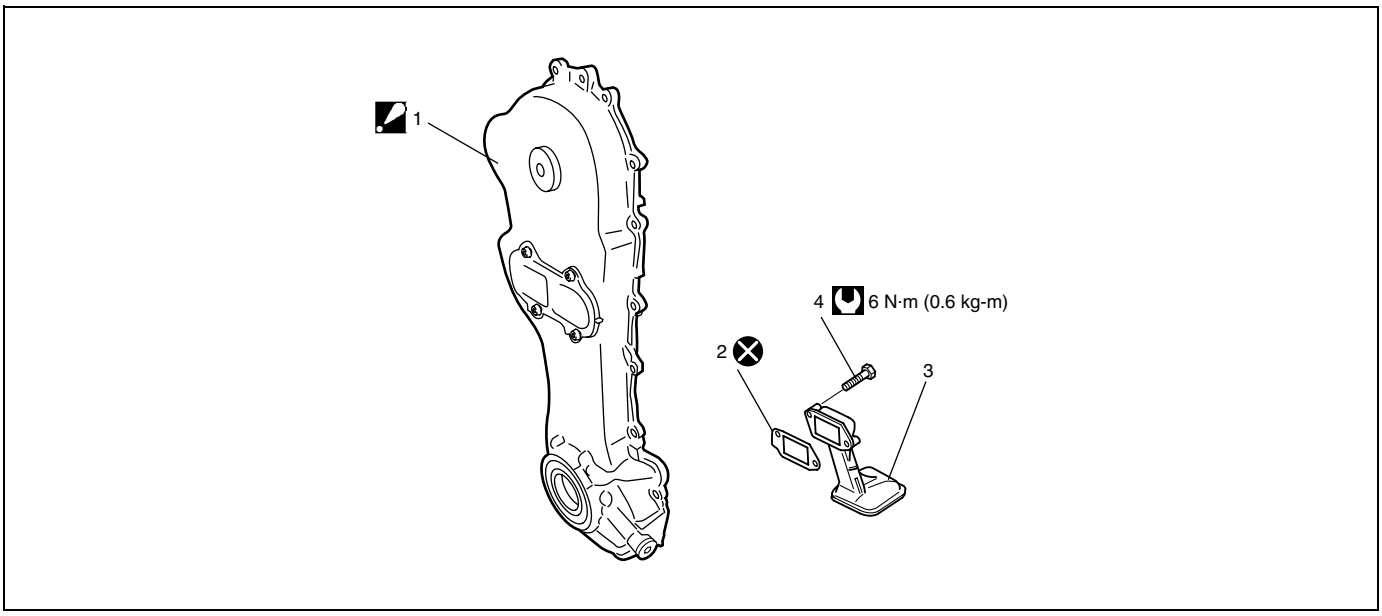

	1. Timing chain cover : Oil pump is incorporated with timing chain cover.	3. Oil pump strainer	Tightening torque
	2. Oil pump strainer gasket	4. Oil strainer bolt	Do not reuse.

Oil Pump / Oil Pump Strainer Removal and Installation

CAUTION:

Do not disassemble oil pump from timing chain cover. Disassembly will spoil its original function. If any malcondition is found in oil pump, replace timing chain cover.

NOTE:

Oil pump is incorporated with timing chain cover.

Removal

1) Remove timing chain cover referring to “Timing Chain Cover and Timing Chain Removal and Installation” in this section.

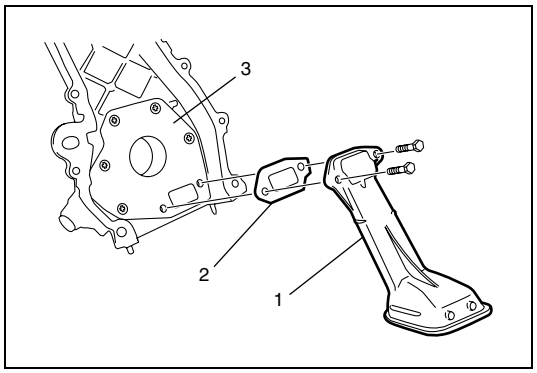

2) Remove oil pump strainer (1) and gasket (2) from timing chain cover (3).

Installation

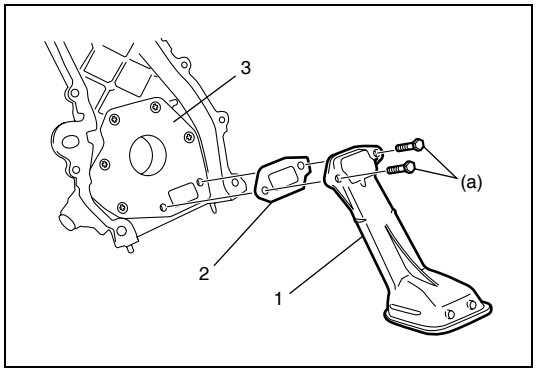

Reverse removal procedure for installation noting the following.

- Clean mating surfaces of timing chain cover (3) and oil pump strainer (1).
- Install oil pump strainer with new gasket (2) to timing chain cover.

Tightening torque
Oil strainer bolt (a): 6 N·m (0.6 kg-m, 4.5 lb-ft)

Oil Pump Strainer Cleaning

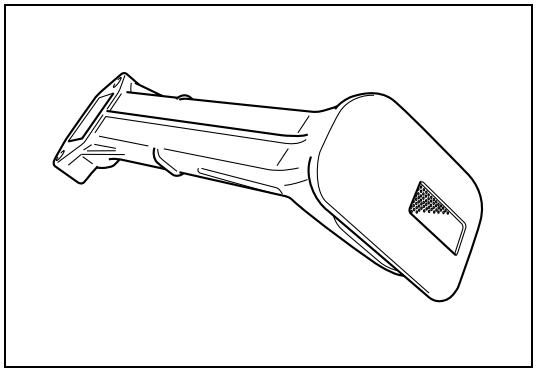

Clean oil pump strainer screen.

Oil Pump Inspection

Oil Seal

Refer to “Timing Chain Cover and Timing Chain Removal and Installation” in this section.

Oil Pump

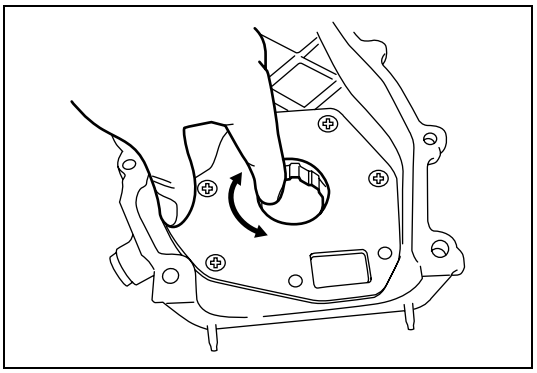

Check rotor turn smoothly by hand.
If rotors is not smoothly, replace timing chain cover.

Camshaft Housing Components

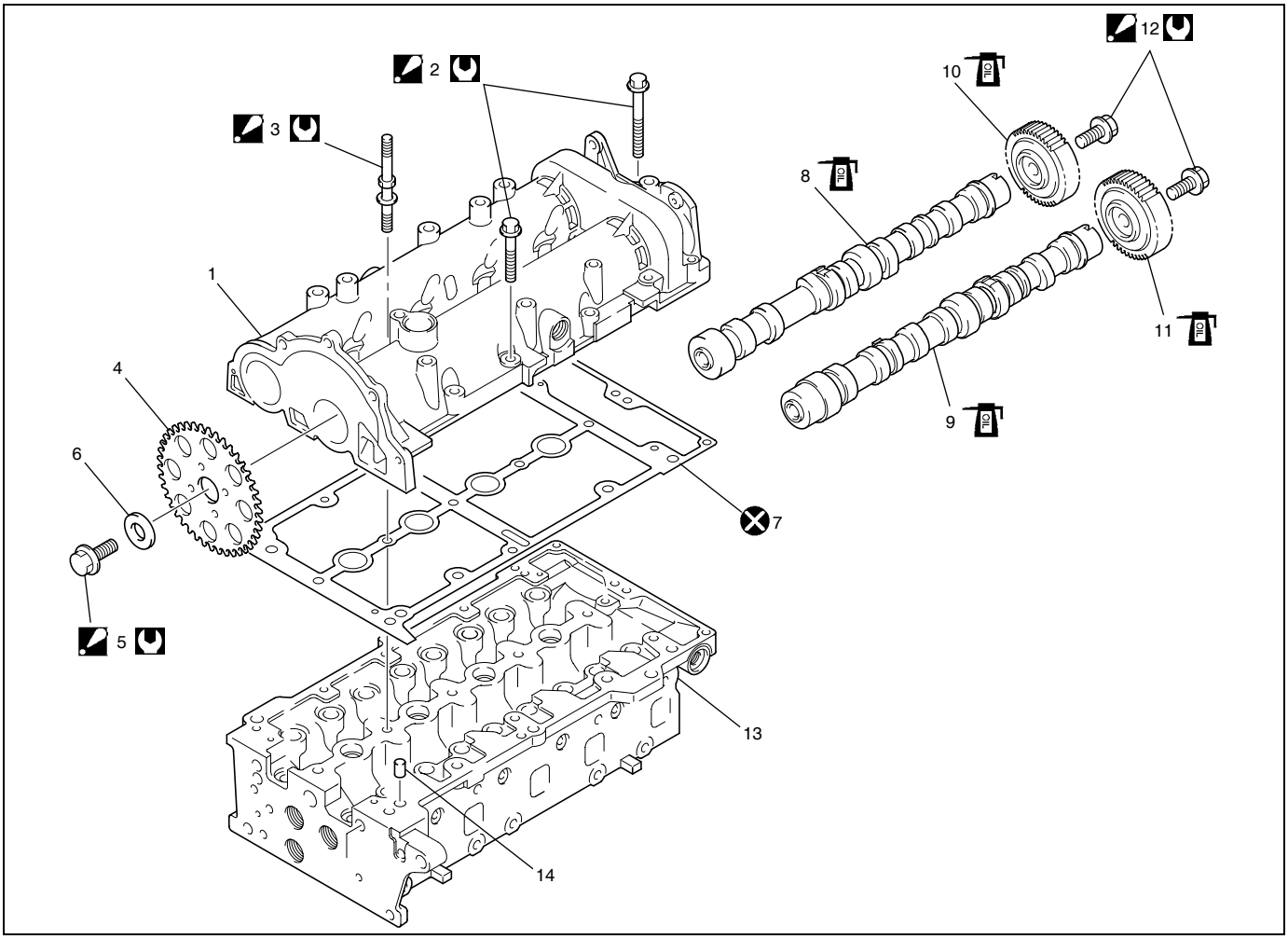

	1. Camshaft housing		7. Camshaft housing gasket		13. Cylinder head
◢	2. Camshaft housing bolt : Tighten 18 N·m (1.8 kg-m, 13.0 lb-ft) by the specified procedure	OIL	8. Intake manifold side camshaft : Apply engine oil to sliding surface		14. Knock pin
◢	3. Camshaft housing stud bolt : Tighten 25 N·m (2.5 kg-m, 18.0 lb-ft) by the specified procedure	OIL	9. Exhaust manifold side camshaft : Apply engine oil to sliding surface	◡	Tightening torque
	4. Camshaft timing sprocket	OIL	10. Intake manifold side camshaft gear : Apply engine oil to gear	⊗	Do not reuse.
◢	5. Camshaft timing sprocket bolt : Tighten 120 N·m (12.0 kg-m, 87.0 lb-ft) by the specified procedure	OIL	11. Exhaust manifold side camshaft gear : Apply engine oil to gear		
	6. Washer	◢	12. Camshaft gear bolt : Tighten 120 N·m (12.0 kg-m, 87.0 lb-ft) by the specified procedure		

Camshaft Housing Assembly Removal and Installation

Removal

1) Remove engine assembly from engine compartment referring to “Engine Assembly Removal and Installation” in this section.
2) Remove timing chain referring to “Timing Chain Cover and Timing Chain Removal and Installation” in this section.
3) Remove fuel injector referring to “Fuel injector removal and installation” in section 6E3.

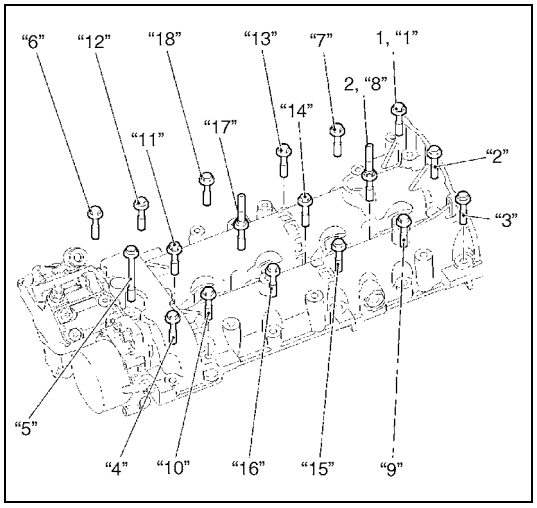

4) Loosen camshaft housing bolt (1) and camshaft housing stud bolt (2) in numerical order as shown in figure, a little at a time, and remove them.

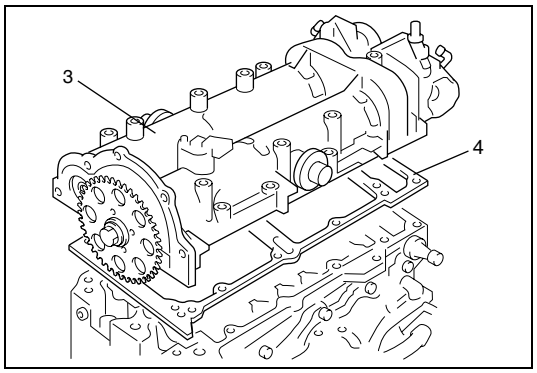

5) Remove camshaft housing assembly (3) and camshaft housing gasket (4).

Installation

1) Clean mating surface of camshaft housing and cylinder head.

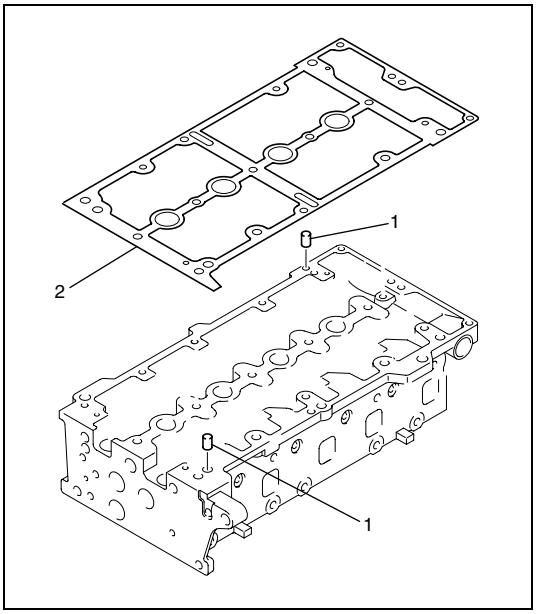

2) Install knock pins (1) to cylinder head, if removed.
3) Install new camshaft housing gasket (2) to cylinder head.

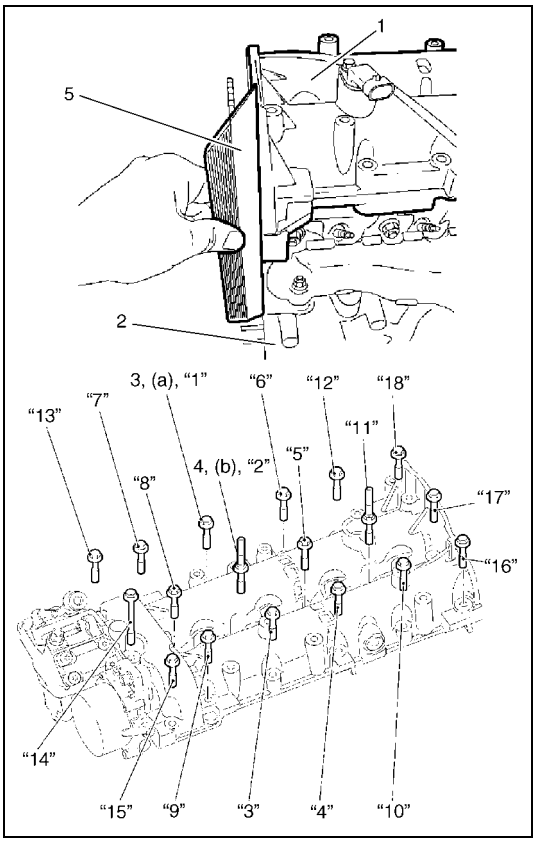

4) Install camshaft housing assembly (1) to cylinder head (2) as follows.
   a) Install camshaft housing assembly, and tighten camshaft housing bolt (3) and camshaft housing stud bolt (4) by hand.
   b) Be flush with end faces of camshaft housing assembly (1) and cylinder head (2) using straightedge (5).
   c) Tighten camshaft housing bolt (3) and camshaft housing stud bolt (4) to specified torque according to numerical order as shown in figure.

Tightening torque
Camshaft housing bolt
(a): 18 N·m (1.8 kg-m, 13.0 lb-ft) by the specified procedure
Camshaft housing stud bolt
(b): 25 N·m (2.5 kg-m, 18.0 lb-ft) by the specified procedure

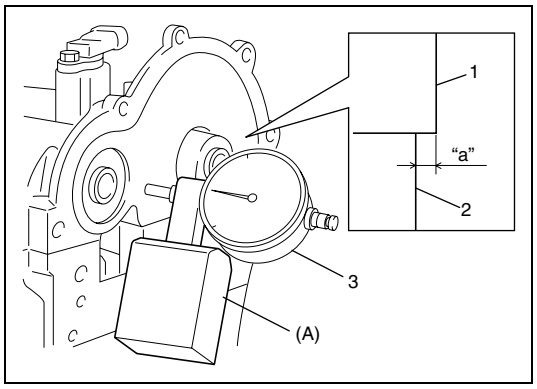

5) Measure bump "a" between camshaft housing (1) and cylinder head (2) (flatness) using dial gauge (3) and special tool (A) as shown in figure.
   If it is out of specification, remove camshaft housing and return to step 4).

Special tool
(A): 09910-26510 (OUT 0000005)

Bump between camshaft housing and cylinder head (flatness)
"a": –0.1 to 0.1 mm (–0.0039 to 0.0039 in.)

6) Install fuel injector referring to "Fuel injector removal and installation" in section 6E3.
7) Install timing chain and timing chain cover referring to "Timing Chain Cover and Timing Chain Removal and Installation" in this section.
8) Install engine assembly to engine compartment referring to "Engine Assembly Removal and Installation" in this section.

Camshaft Housing Assembly Disassembly and Reassembly

Disassembly

1) Remove camshaft housing assembly referring to "Camshaft Housing Assembly Removal and Installation" in this section.
2) Remove vacuum pump referring to "Vacuum Pump Removal and Installation" in this section.
3) Remove injection pump referring to "Injection pump removal and installation" in Section 6E3.
4) Remove CMP sensor referring to "Camshaft position sensor (CMP sensor) removal and installation" in Section 6E3.

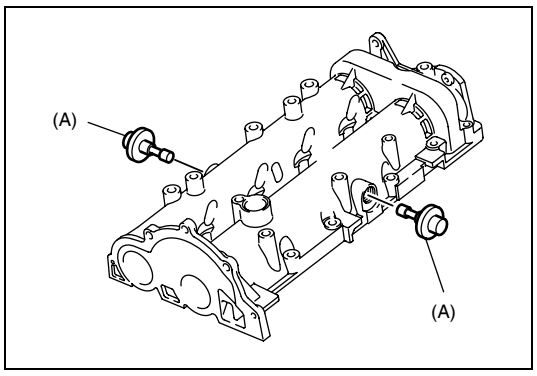

5) Remove special tools from camshaft housing.

Special tool
(A): 09917-68610

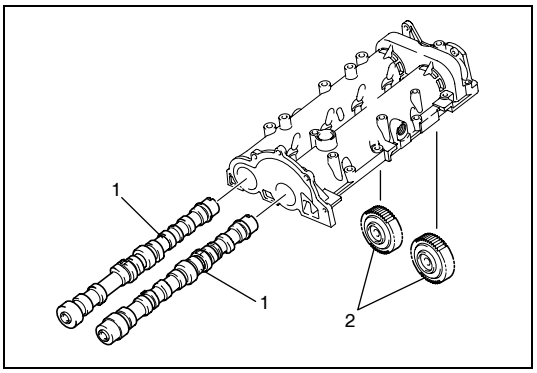

6) Remove camshafts (1) and camshaft gears (2) from camshaft housing as follows.

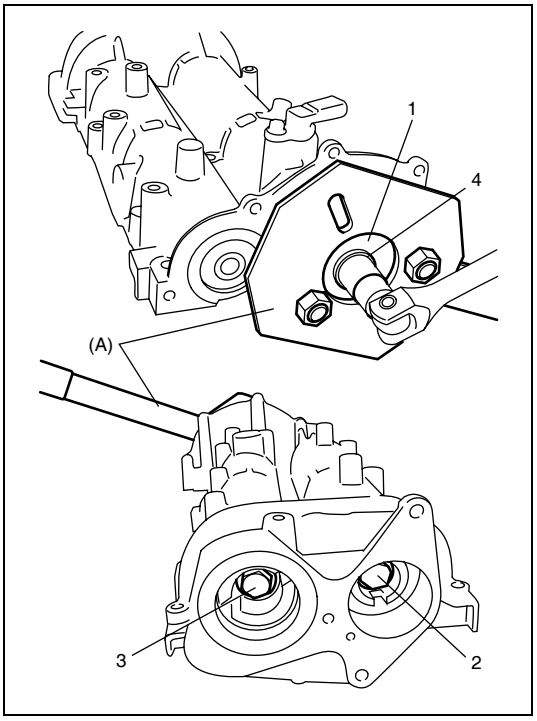

a) Lock camshaft timing sprocket (1) using special tool.

Special tool
(A): 09917-68221

b) Loosen camshaft gear bolt (2) of intake manifold side.
c) Loosen camshaft gear bolt (3) of exhaust manifold side.
d) Loosen camshaft timing sprocket bolt (4), and remove camshaft timing sprocket (1).
e) Remove camshafts and camshaft gears.

Reassembly

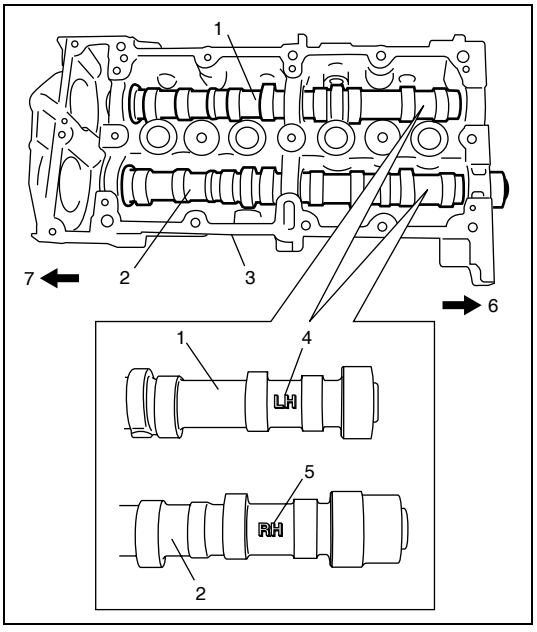

1) Apply engine oil to sliding surface of each camshaft and camshaft housing, and then install intake manifold side camshaft (1) and exhaust manifold side camshaft (2) to camshaft housing (3).

NOTE:

Be sure to differentiate intake side and exhaust side camshafts by marks shown in figure.

4.	"LH" mark
5.	"RH" mark
6.	Crankshaft pulley side
7.	Flywheel side

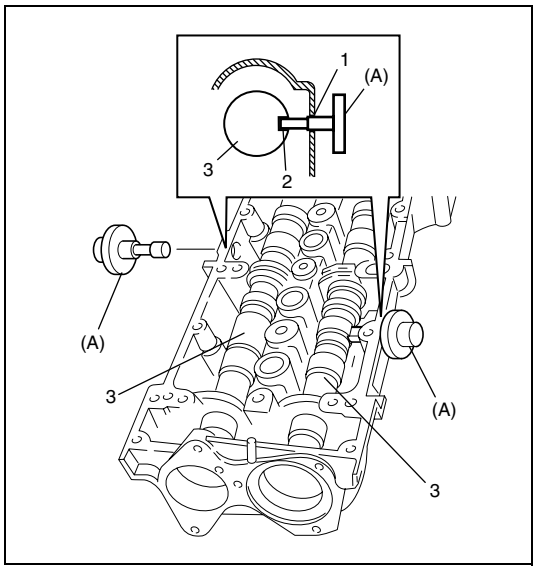

2) Install special tools (A) as follows.
   a) Align camshaft housing plug hole (1) with camshaft gap (2) turning intake manifold side and exhaust manifold side camshaft as shown in figure.
   b) Lock camshafts (3) inserting special tools (A) to plug holes.

Special tool
(A): 09917-68610

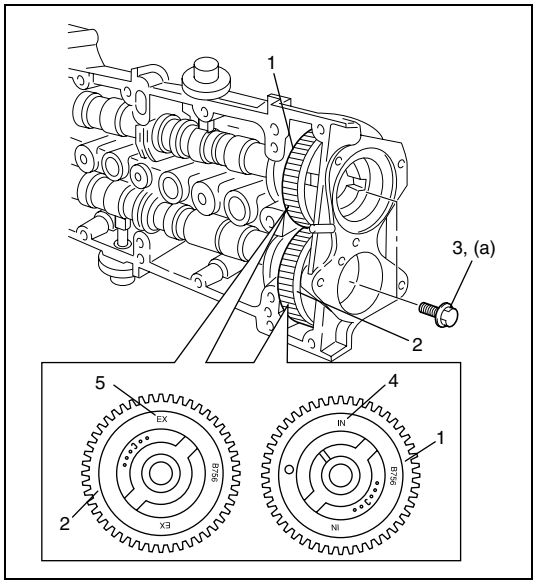

3) Install intake manifold side camshaft gear (1) and exhaust manifold side camshaft gear (2) to camshaft housing, and tighten camshaft gear bolts (3) by hand.

NOTE:

Be sure to differentiate intake and exhaust side camshaft gears by punched marks shown in figure.

4. "IN" mark
5. "EX" mark

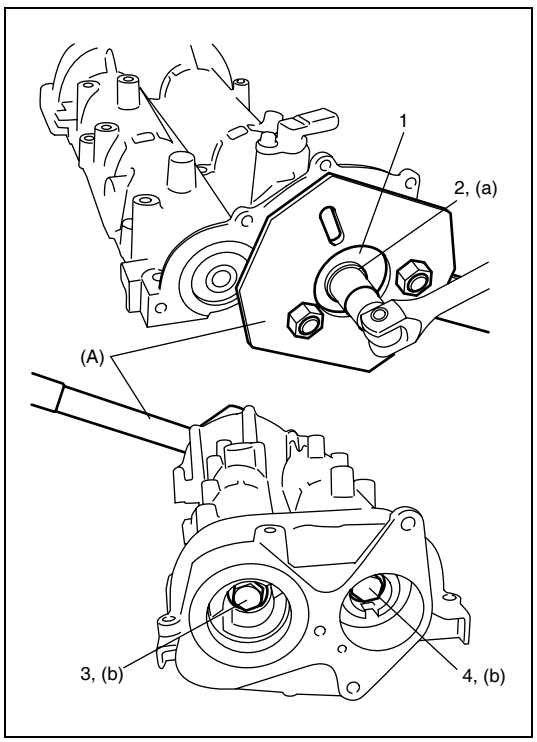

4) Tighten camshaft timing sprocket bolt and camshaft gear bolts as follows.
   a) Lock camshaft timing sprocket (1) using special tool.

Special tool
(A): 09917-68221

   b) Install camshaft timing sprocket (1) and tighten camshaft timing sprocket bolt (2) to specified torque.

Tightening torque
Camshaft timing sprocket bolt
(a): 120 N·m (12.0 kg-m, 87.0 lb-ft) by the specified procedure

   c) Tighten exhaust manifold side camshaft gear bolt (3) then intake manifold side camshaft gear bolt (4).

Tightening torque
Camshaft gear bolt
(b): 120 N·m (12.0 kg-m, 87.0 lb-ft) by the specified procedure

5) Install CMP sensor referring to “Camshaft position sensor (CMP sensor) removal and installation” in section 6E3.
6) Install injection pump referring to “Injection pump removal and installation” in Section 6E3.
7) Install vacuum pump referring to “Vacuum Pump Removal and Installation” in this section.
8) Install camshaft housing assembly referring to “Camshaft Housing Assembly Removal and Installation” in this section.
9) Install timing chain and timing chain cover referring to “Timing Chain Cover and Timing Chain Removal and Installation” in this section.
10) Install engine assembly to engine compartment referring to “Engine Assembly Removal and Installation” in this section.

Camshaft Inspection

Camshaft

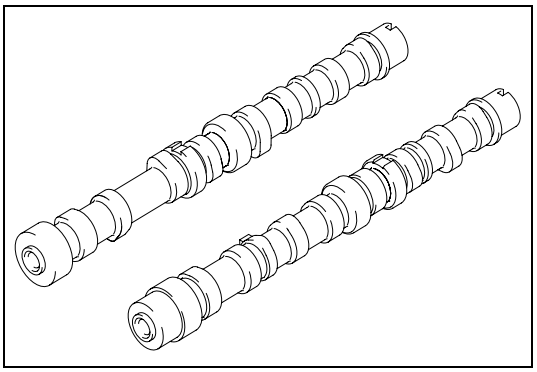

Check journals and cam faces for wear or damage.
If any malcondition is found, replace camshaft.

Cam Wear

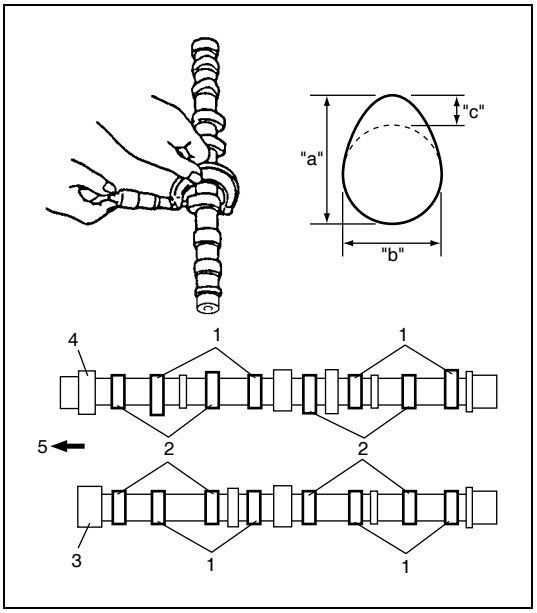

1) Using micrometer, measure cam height “a” and cam width “b”.
2) Calculate valve lift “c” using the following formula.

“c” = “a” – “b”

3) If valve lift “c” is below its specification, replace camshaft.

Valve lift “c”
Intake cam: 6.4 mm (0.252 in.)
Exhaust cam: 7.5 mm (0.295 in.)

1. Intake cam	4. Exhaust manifold side camshaft
2. Exhaust cam	5. Crankshaft pulley side
3. Intake manifold side camshaft	

Camshaft Journal

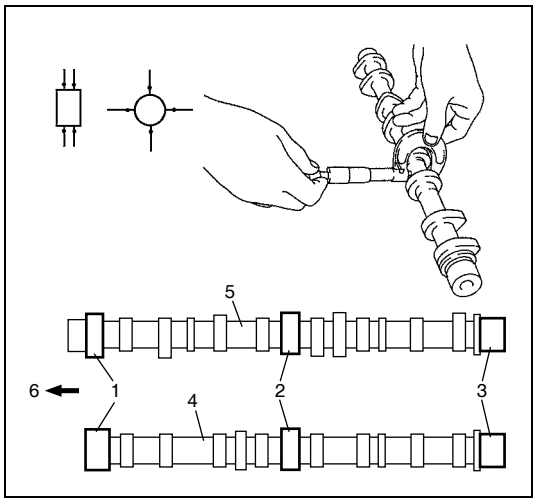

Check camshaft journal outside diameter using micrometer.
If measured diameter is out of specification, replace camshaft.

Camshaft journal outside diameter
No.1: 38.500 – 38.515 mm (1.5158 – 1.5163 in.)
No.2: 38.000 – 38.015 mm (1.4961 – 1.4966 in.)
No.3: 30.000 – 30.015 mm (1.1811 – 1.1816 in.)

1. Camshaft journal No.1	4. Intake manifold side camshaft
2. Camshaft journal No.2	5. Exhaust manifold side camshaft
3. Camshaft journal No.3	6. Crankshaft pulley side

Camshaft Housing

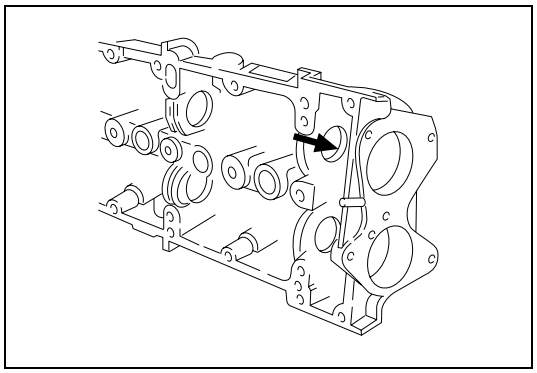

- Check camshaft journals and camshaft housings for pitting, scratches, wear or damage.
  If any malcondition is found, replace camshaft housing.

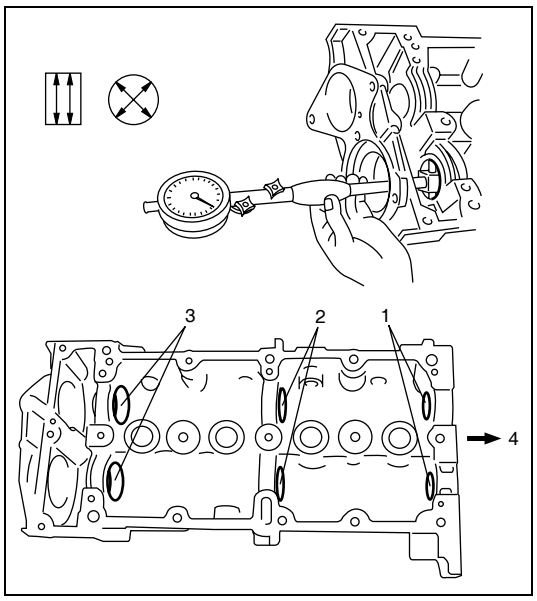

- Check camshaft journal bore diameter using bore gauge.
  If measured diameter is out of specification, replace camshaft housing.

Camshaft journal bore diameter
No.1: 38.545 – 38.570 mm (1.5176 – 1.5185 in.)
No.2: 38.045 – 38.070 mm (1.4979 – 1.4988 in.)
No.3: 30.045 – 30.070 mm (1.1829 – 1.1838 in.)

1. Camshaft journal bore No.1
2. Camshaft journal bore No.2
3. Camshaft journal bore No.3
4. Crankshaft pulley side

Camshaft Timing Sprocket

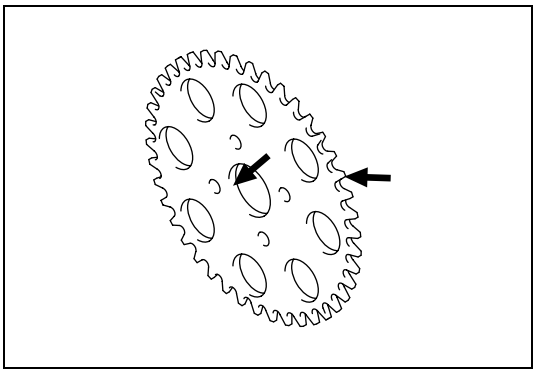

Check camshaft timing sprocket for pitting, scratches or damage.
If any malcondition is found, replace camshaft timing sprocket.

Intake Manifold Side Camshaft Gear and Exhaust Manifold Side Camshaft Gear

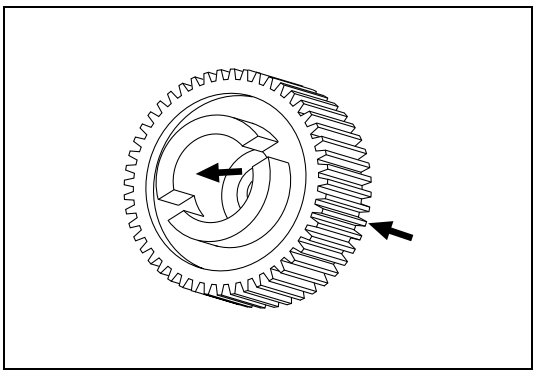

Check intake manifold side and exhaust manifold side camshaft gears for pitting, scratches or damage.
If any malcondition is found, replace intake manifold side and/or exhaust manifold side camshaft gear.

Valves and Cylinder Head Components

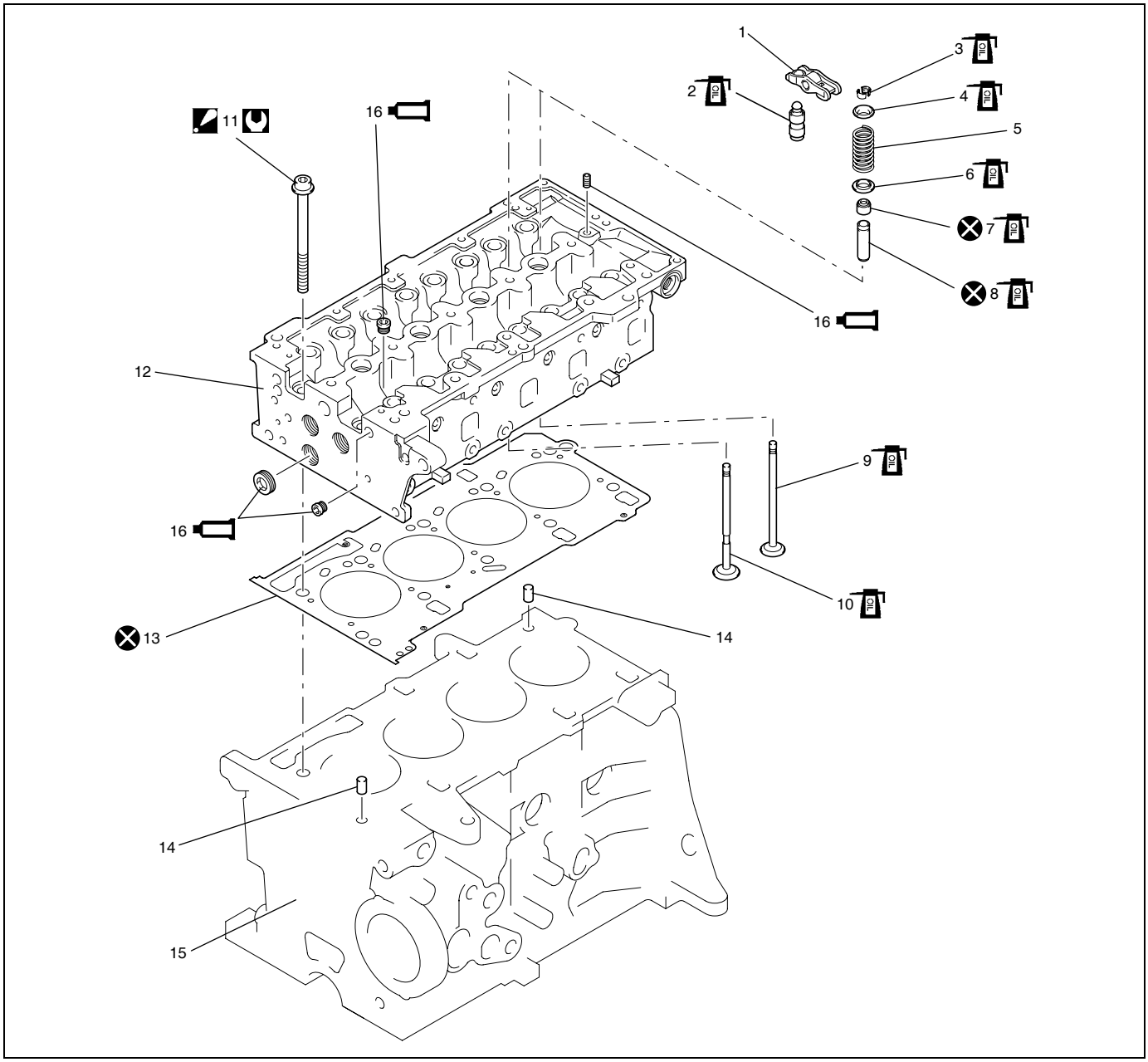

1. Valve rocker arm	8. Valve guide	15. Cylinder block
2. Hydraulic valve lash adjuster	9. Intake valve	16. Plug : Apply sealant 99000-85E00 to all around thread part of plug.
3. Valve cotter	10. Exhaust valve	Tightening Torque
4. Valve spring retainer	11. Cylinder head bolt : Tighten 20 N·m (2.0 kg-m, 14.5 lb-ft), 40 N·m (4.0 kg-m, 29.0 lb-ft), 90° and 90° by the specified procedure	Apply engine oil to sliding surface.
5. Valve spring	12. Cylinder head	Do not reuse.
6. Valve spring seat	13. Cylinder head gasket	
7. Valve stem seal	14. Knock pin	

Valves and Cylinder Head Assembly Removal and Installation

CAUTION:

Note original position in which each valve rocker arms and hydraulic valve lash adjuster ware installed, and then install them to original position.

If each valve rocker arm or hydraulic valve lash adjuster is not installed to original position, engine will spoil its original performance.

Removal

1) Remove engine assembly from engine compartment referring to “Engine Assembly Removal and Installation” in this section.
2) Remove camshaft housing assembly referring to “Camshaft Housing Assembly Removal and Installation” in this section.
3) Remove exhaust manifold to “Exhaust Manifold Removal and Installation” in this section.
4) Remove thermostat case assembly referring to “Thermostat Case Assembly Removal and Installation” in Section 6B3.
5) Remove oil separator referring to “Oil separator and crankcase ventilation cover removal and installation” in Section 6E3.
6) Remove intake manifold referring to “Intake Manifold Removal and Installation” in this section.
7) Remove oil pressure switch referring to “Oil Pressure Switch Removal and Installation” in this section.
8) Remove grow plugs referring to “Glow plug removal and installation” in Section 6E3.

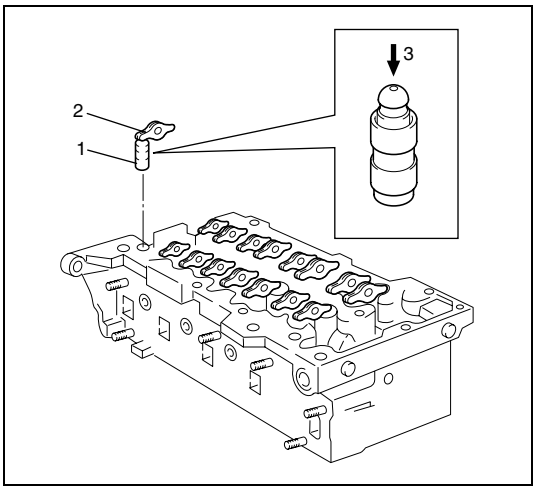

9) Remove hydraulic valve lash adjuster (1) with valve rocker arm (2).

NOTE:

- **Never disassemble hydraulic valve lash adjuster.**
- **Don’t apply force (3) to body of hydraulic valve lash adjuster. It will leak oil in high pressure chamber.**
- **Immerse removed hydraulic valve lash adjuster in clean engine oil and keep it there till reinstalling it so as to prevent oil leakage.**

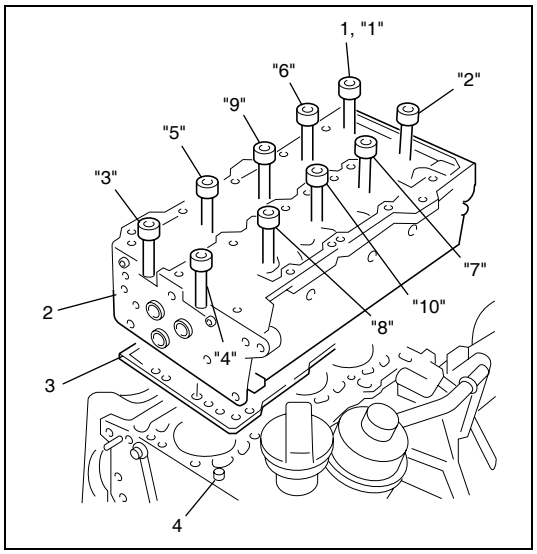

10) Loosen cylinder head bolts (1) according to numerical order as shown in figure a little at a time, and remove them.
11) Remove cylinder head (2) and cylinder head gasket (3).
12) Remove knock pins (4), if necessary.
13) Check all around cylinder head for any other parts required to be removed or disconnected.

Installation

1) Clean mating surface of cylinder head and cylinder block.

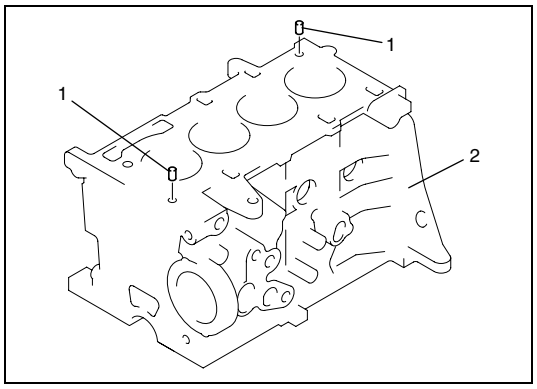

2) Install knock pins (1) to cylinder block (2), if removed.

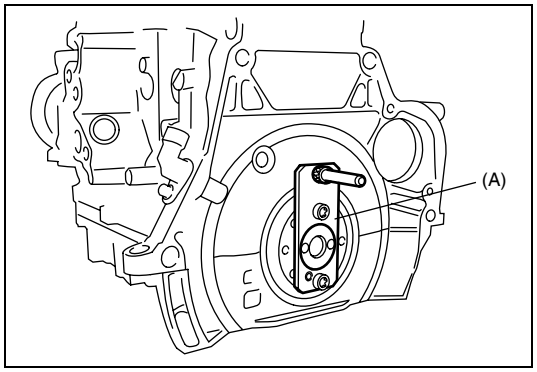

3) Select and install new cylinder head gasket as follows.
   a) Remove special tool (A).

Special tool
(A): 09912-38300

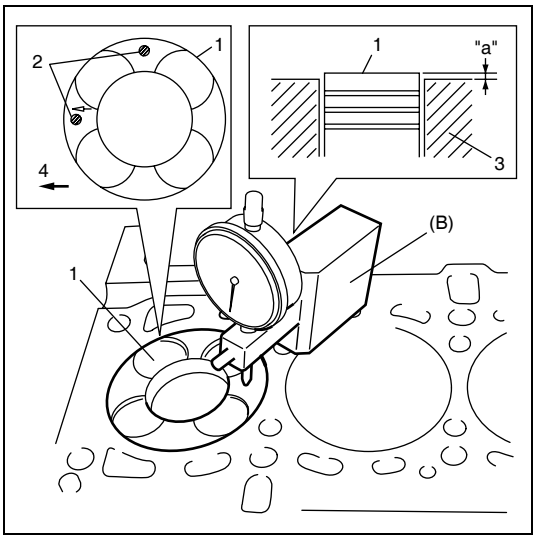

b) Using special tool and dial gauge, measure piston protrusion “a” at specified measurement positions (2) of TDC position as shown in figure. Repeat this procedure in all pistons (1).

Special tool
(B): 09910-26510 (OUT 0000005)

3. Cylinder block
4. Crankshaft pulley side

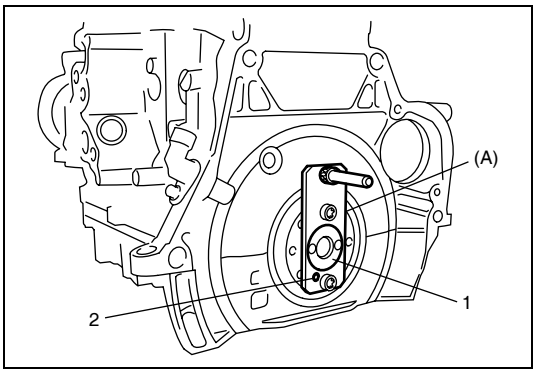

c) Lock crankshaft (1) using special tool.

NOTE:

Be sure to align hole (2) of special tool with knock pin securely.

Special tool
(A): 09912-38300

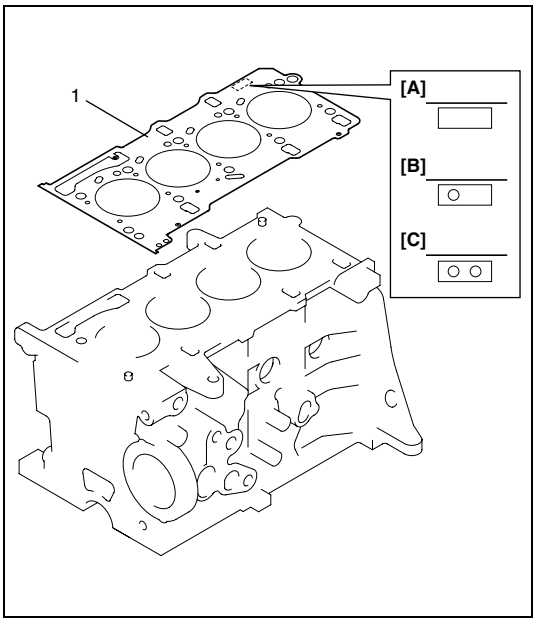

d) Select cylinder head gasket according to maximum value of protrusion “a” measured at step b).

	Gasket thickness	Available piston protrusion
Type A	**0.67 – 0.77 mm (0.0264 – 0.0303 in.)**	**0.028 – 0.127 mm (0.00111 – 0.00500 in)**
Type B	**0.77 – 0.87 mm (0.0304 – 0.0342 in.)**	**0.128 – 0.227 mm (0.00501 – 0.00893 in.)**
Type C	**0.87 – 0.97 mm (0.343 – 0.0381 in.)**	**0.228 – 0.327 mm (0.00894 – 0.01287 in.)**

[A]: Type A (without hole)
[B]: Type B (with one hole)
[C]: Type C (with two holes)

e) Install new cylinder head gasket (1) to cylinder block.

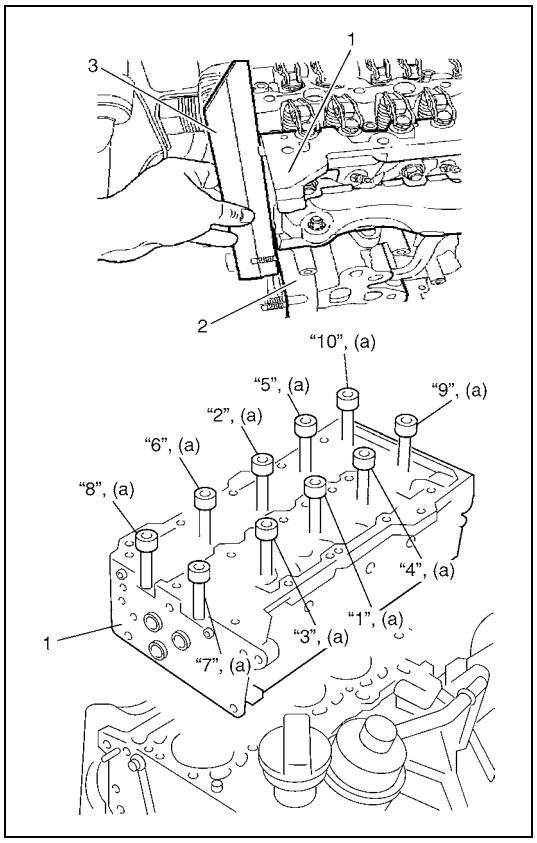

4) Install cylinder head (1) to cylinder block (2) as follows.
   a) Install cylinder head, and tighten cylinder head bolts by hand.
   b) Be flush with end faces of cylinder head (1) and cylinder block (2) using straightedge (5).
   c) Tighten all bolts to 20 N·m (2.0 kg-m, 14.5 lb-ft) according to numerical order in figure.
   d) In the same manner as in Step c), tighten them to 40 N·m (4.0 kg-m, 29.0 lb-ft).
   e) Retighten all bolts 90° according to numerical order in figure.
   f) Repeat Step e).

Tightening torque
Cylinder head bolt (a):
Tighten 20 N·m (2.0 kg-m, 14.5 lb-ft), 40 N·m (4.0 kg-m, 29.0 lb-ft), 90° and 90° by the specified procedure

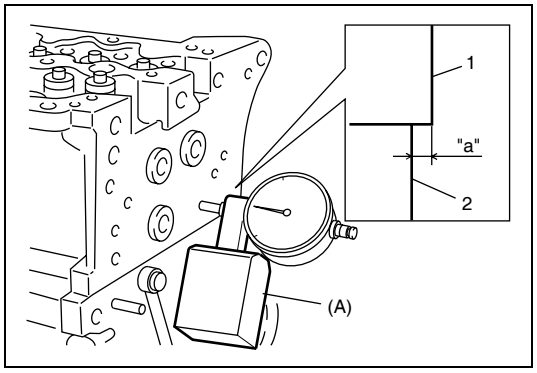

5) Measure bump "a" between cylinder head (1) and cylinder block (2) (flatness) using dial gauge and special tool as shown in figure.
   If measured notch is out of specification, remove cylinder head and return to step 4).

Special tool
(A): 09910-26510 (OUT 0000005)

Notch between cylinder head and cylinder block (flatness)
"a": –0.1 to 0.1 mm (–0.0039 to 0.0039 in.)

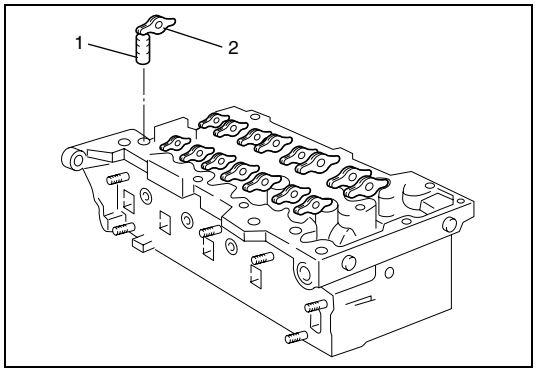

6) Apply engine oil around hydraulic valve lash adjuster (1) and valve rocker arm (2), and install them to cylinder head.
7) Install grow plugs referring to "Glow plug removal and installation" in Section 6E3.
8) Install oil pressure switch referring to "Oil Pressure Switch Removal and Installation" in this section.
9) Install intake manifold referring to "Intake Manifold Removal and Installation" in this section.
10) Install oil separator referring to "Oil separator and crankcase ventilation cover removal and installation" in Section 6E3, if removed.
11) Install thermostat case assembly referring to "Thermostat Case Assembly Removal and Installation" in Section 6B3.
12) Install exhaust manifold to "Exhaust Manifold Removal and Installation" in this section.

13) Install camshaft housing assembly referring to “Camshaft Housing Assembly Removal and Installation” in this section.
14) Install engine assembly to engine compartment referring to “Engine Assembly Removal and Installation” in this section.

Valves and Cylinder Head Assembly Disassembly and Reassembly

CAUTION:
Note original position in which each valve and valve spring seat ware installed, and then install them to original position.
If each valve or valve spring seat is not installed to original position, engine will spoil its original performance.

Disassembly

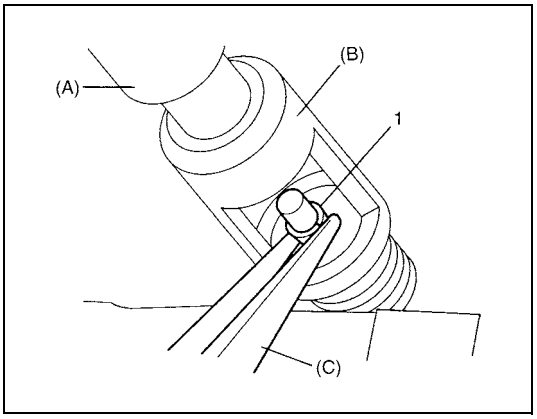

1) Using special tool (A) and (B), compress valve springs and then remove valve cotters (1) using special tool (C).

Special tool
(A): 09916-14510
(B): 09916-14521
(C): 09916-84511

2) Release special tool, and remove valve spring retainer and valve spring.
3) Remove valve from combustion chamber side.

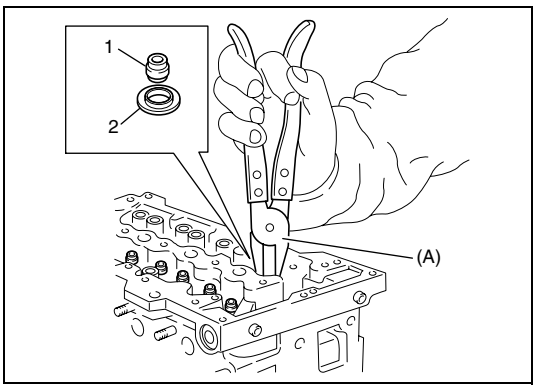

4) Remove valve stem seal (1) from valve guide using special tool, and then remove valve spring seat (2).

Special tool
(A): 09917-98610

Reassembly

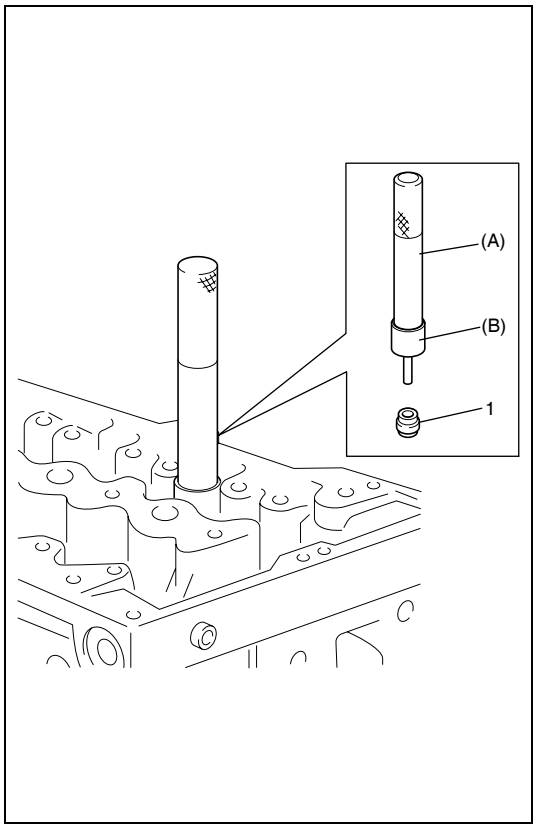

1) Install valve spring seats to cylinder head.
2) Install new valve stem seal (1) to valve guide.
   After applying engine oil to seal and spindle of special tool (valve guide installer handle), fit stem seal to spindle, and then install seal to valve guide by pushing special tool by hand.
   After installing, check to be sure that seal is properly fixed to valve guide.

CAUTION:
When installing, never tap or hit special tool with a hammer or the like. Install seal to guide only by pushing special tool by hand. Tapping or hitting special tool may cause damage to seal.

NOTE:
Do not reuse once-disassembled seal. Be sure to install new seal.

Special tool
(A): 09916-58210
(B): 09917-98221

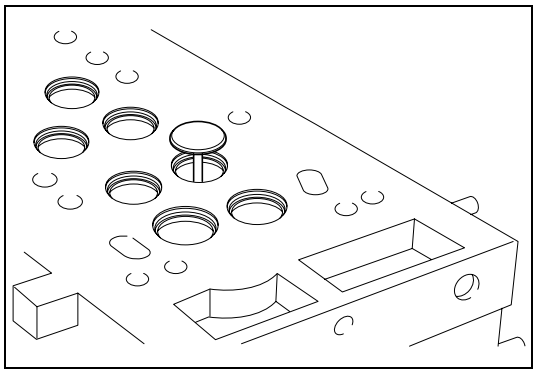

3) Apply engine oil to stem seal, valve guide bore and valve stem, and then install valve to valve guide.
4) Install valve spring and valve spring retainer.

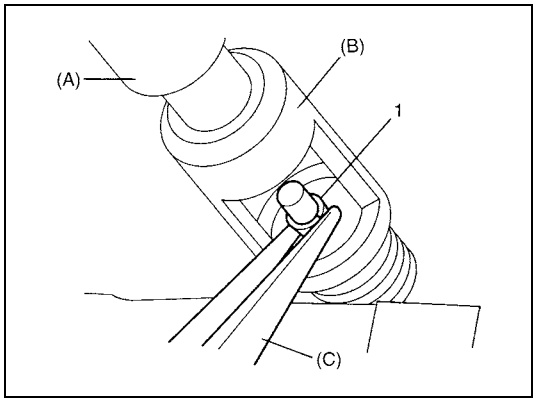

5) Using special tool (A) and (B), compress valve spring. And, fit two valve cotters (1) into groove in valve stem using special tool (C).

Special tool
(A): 09916-14510
(B): 09916-14521
(C): 09916-84511

Valves and Cylinder Head Components Inspection

Cylinder Head

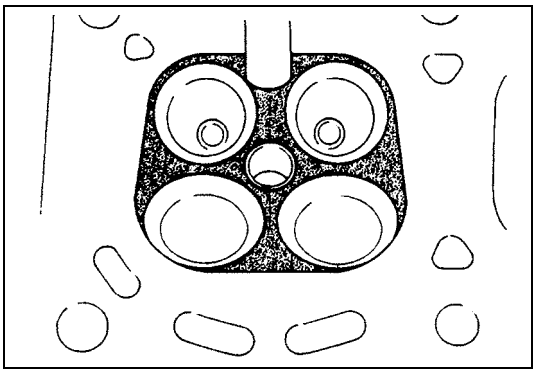

- Remove all carbon deposits from combustion chambers.

NOTE:

Do not use any sharp-edged tool to scrape off carbon deposits. Be careful not to scuff or nick metal surfaces when decarboning. The same applies to valves and valve seats, too.

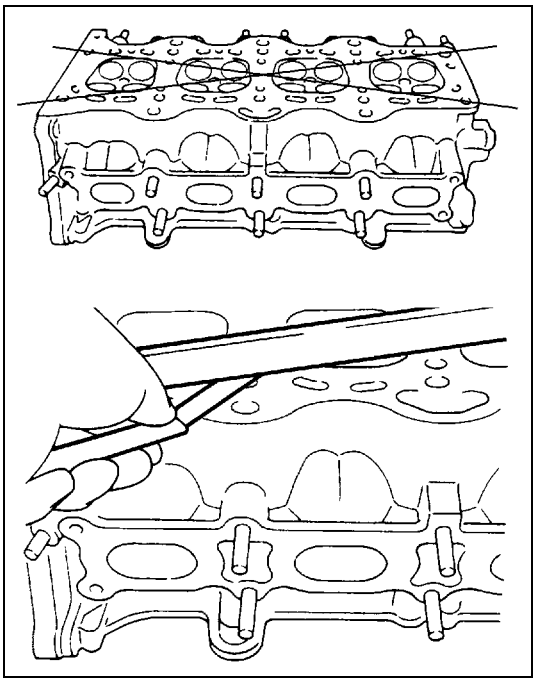

- Check cylinder head for cracks on intake and exhaust ports, combustion chambers, and head surface.
  Using a straightedge and thickness gauge, check flatness of gasketed surface at a total of 2 locations. If distortion limit, given below, is exceeded, replace cylinder head.

Limit of distortion for surface of cylinder head piston side:
0.10 mm (0.00394 in.)

Valve Springs

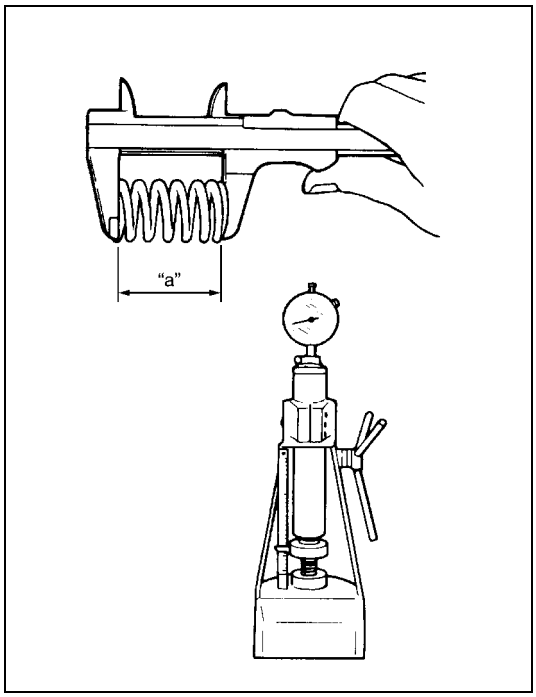

Referring to data given below, check to be sure that each spring is in sound condition, free of any evidence of breakage or weakening. Remember, weakened valve springs can cause chatter, not to mention possibility of reducing power output due to gas leakage caused by decreased seating pressure.

Valve spring free length (In and Ex) "a":
37.9 mm (1.492 in.)

Valve spring preload (In and Ex):
162 – 180 N (16.2 – 18.0 kg) for 31.0 mm (35.7 – 39.7 lb/ 1.220 in)
361 – 395 N (36.1 – 39.5 kg) for 23.5 mm (79.6 – 87.1 lb/ 0.925 in)

Hydraulic Valve Lash Adjuster and Valve Rocker Arm

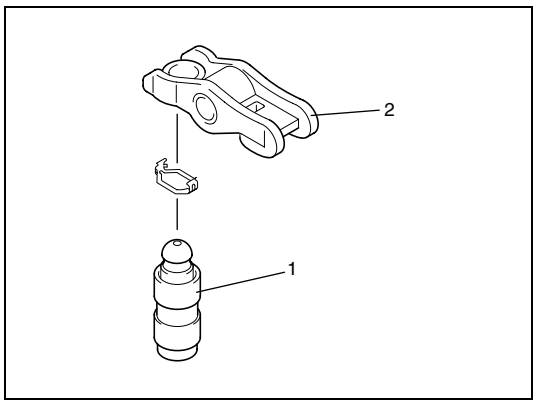

Check hydraulic valve lash adjuster (1) and valve rocker arm (2) for pitting, scratches, wear or damage.
If any malcondition is found, replace them.

Pistons, Piston Rings, Connecting Rods and Cylinder Components

CAUTION:

- **Connecting rod and connecting rod bearing cap must be replaced as a set when either replacement becomes necessary.**
- **Note original position in which each piston, piston ring, connecting rod and connecting rod bearing cap were installed, and install them to original position.**
  If each piston, piston ring, connecting rod and connecting rod bearing cap is not installed to original position, engine will spoil its original performance.

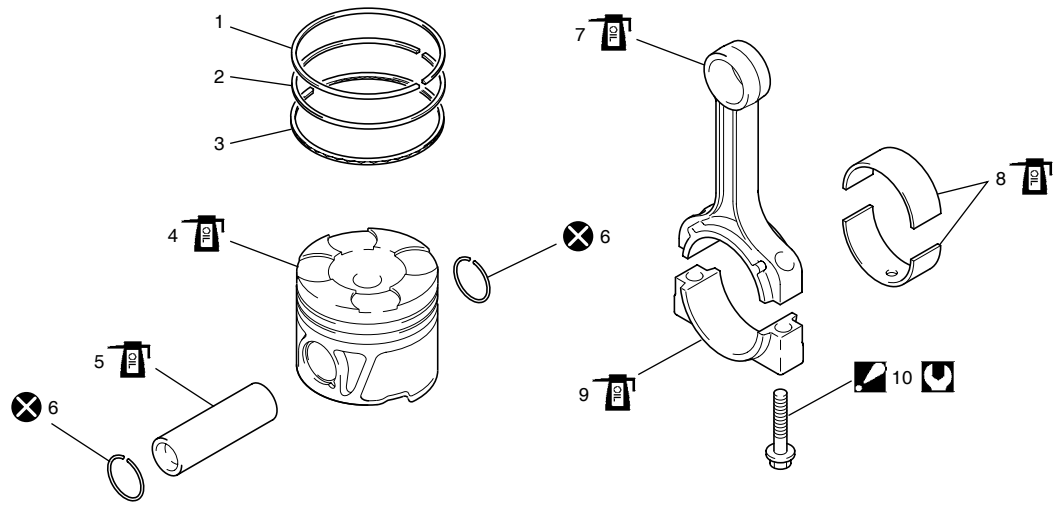

1. Top ring	6. Piston pin circlip	Tightening Torque
2. 2nd ring	7. Connecting rod	Apply engine oil to sliding surface
3. Oil ring	8. Connecting rod bearing	Do not reuse.
4. Piston	9. Connecting rod bearing cap	
5. Piston pin	10. Connecting rod bearing cap bolt : Tighten 20 N·m (20 kg-m, 14.5 lb-ft) and 40° by the specified.	

Pistons, Piston Rings, Connecting Rods and Cylinder Removal and Installation

CAUTION:

- **Connecting rod and connecting rod bearing cap must be replaced as a set when either replacement becomes necessary.**
- **Note original position in which each piston, piston ring, connecting rod and connecting rod bearing cap were installed, and install them to original position.**
  If each piston, piston ring, connecting rod and connecting rod bearing cap is not installed to original position, engine will spoil its original performance.

Removal

1) Remove engine assembly from engine compartment referring to “Engine Assembly Removal and Installation” in this section.
2) Remove cylinder head referring to “Valves and Cylinder Head Assembly Removal and Installation” in this section.

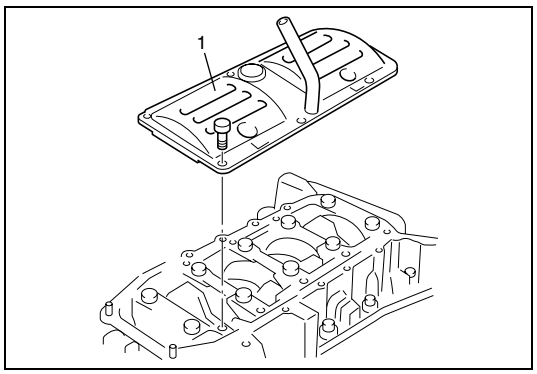

3) Remove oil pan baffle plate (1) from lower crankcase.

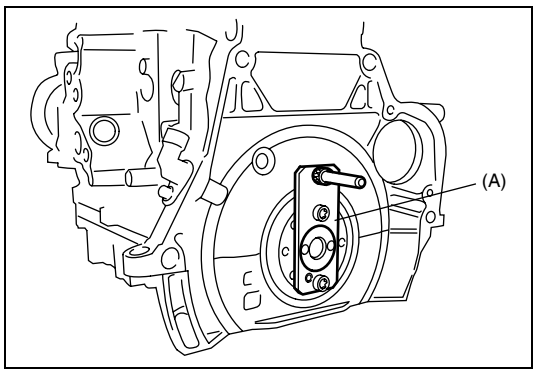

4) Remove special tool (A).

Special tool
(A): 09912-38300

5) Mark cylinder number on all pistons using silver pencil or quick drying paint for installation.

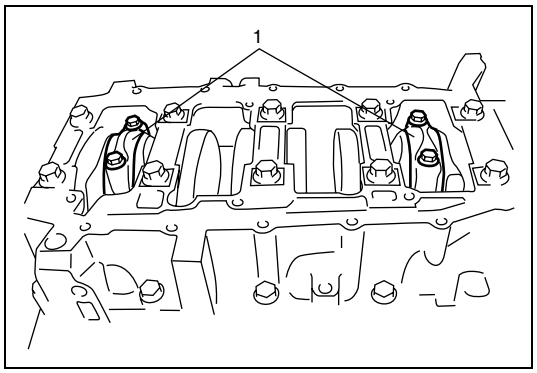

6) Remove connecting rod bearing caps (1).
7) Decarbonize top of cylinder bore before removing piston from cylinder.
8) Push piston and connecting rod assembly out through the top of cylinder bore.

Installation

1) Apply engine oil to pistons, rings, cylinder walls, connecting rod bearings and crankpins.

NOTE:

Do not apply oil between connecting rod and bearing or between bearing cap and bearing.

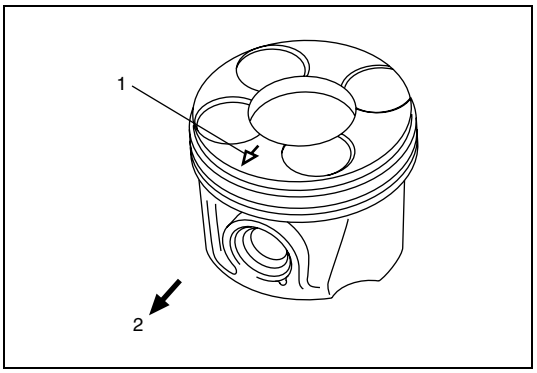

2) When installing piston and connecting rod assembly into cylinder bore, point arrow mark (1) on piston head to crankshaft pulley side (2).

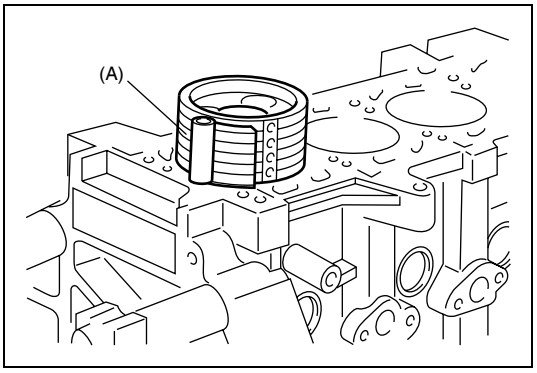

3) Install piston and connecting rod assembly into cylinder bore matching cylinder number marked in removal. Use special tool (piston ring compressor) to compress rings. Guide connecting rod into place on crankshaft.
Using a hammer handle, tap piston head to install piston into bore. Hold ring compressor firmly against cylinder block until all piston rings have entered cylinder bore.

Special tool
(A): 09916-77310

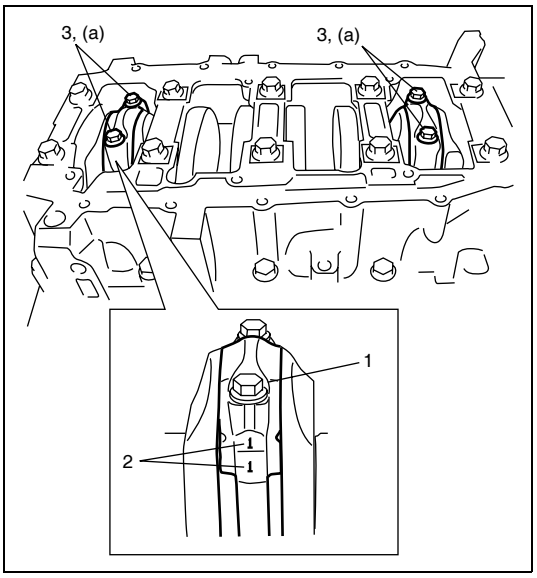

4) Install bearing cap (1) to applicable cylinder matching cylinder number (2) on bearing cap and connecting rod, and then tighten bearing cap bolts as follows.
a) Tighten all connecting rod bearing cap bolts (3) to 20 N·m (2.0 kg-m, 14.5 lb-ft).
b) Retighten them by turning through 40°.

Tightening torque
Connecting rod bearing cap bolt (a):
Tighten 20 N·m (2.0 kg-m, 14.5 lb-ft) and 40° by the specified procedure

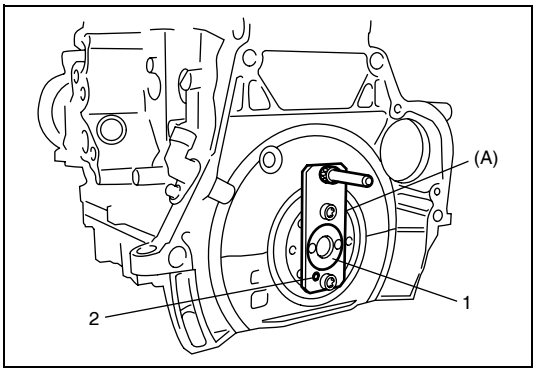

5) Lock crankshaft (1) using special tool.

NOTE:

Be sure to align hole (2) of special tool with knock pin securely.

Special tool
(A): 09912-38300

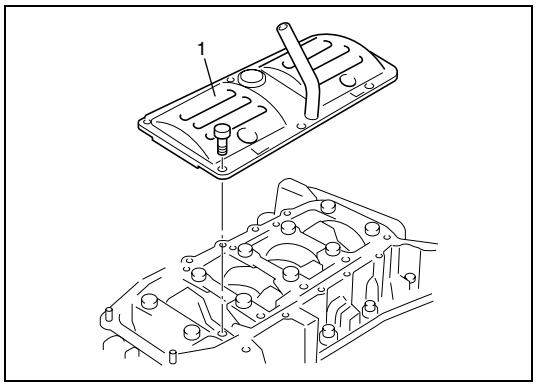

6) Install oil pan baffle plate (1) to lower crankcase.
7) Install cylinder head referring to “Valves and Cylinder Head Assembly Removal and Installation” in this section.
8) Install camshaft housing assembly referring to “Camshaft Housing Assembly Removal and Installation” in this section.
9) Install timing chain and timing chain cover referring to “Timing Chain Cover and Timing Chain Removal and Installation” in this section.
10) Install engine assembly to engine compartment referring to “Engine Assembly Removal and Installation” in this section.

Pistons, Piston Rings, Connecting Rods and Cylinder Disassembly and Reassembly

Disassembly

1) Using piston ring expander, remove top and 2nd compression rings and oil ring from piston.

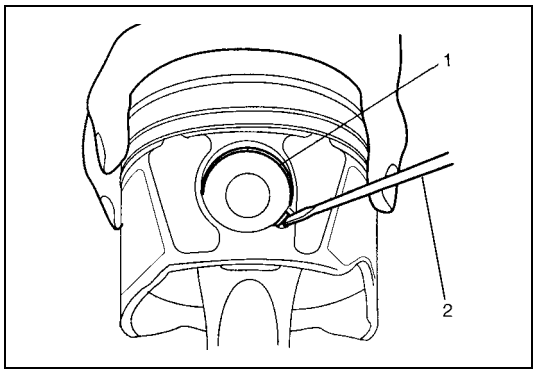

2) Remove piston pin from connecting rod as follows.
   a) Using flat head screw driver (2) or the like, remove piston pin circlips (1).

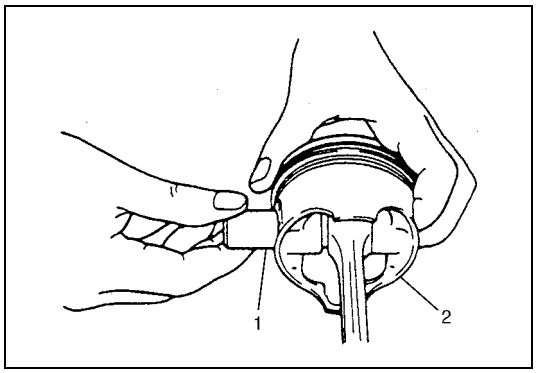

   b) Remove piston pin (1) from piston (2).

Reassembly

1) Clean carbon from piston head and ring grooves using a suitable tool.

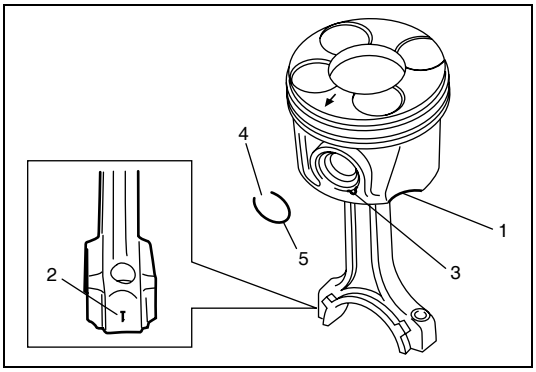

2) Install piston pin to piston and connecting rod as follows.
   a) After applying engine oil to piston pin, piston pin holes in piston and connecting rod, fit connecting rod to piston so that cylinder number (2) of connecting rod bearing and chip of piston skirt (1) come on the opposite side, and insert piston pin to piston and connecting rod.
   b) Install piston pin circlips (5).
   c) Position opening (4) of piston pin circlip to opposite side of removal and fitting channel (3).

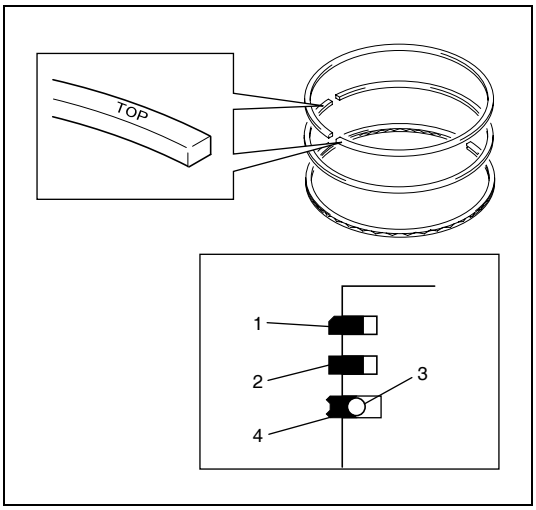

3) Install piston rings to piston noting the following.

NOTE:

- **As indicated in figure, 1st and 2nd rings have "TOP" mark respectively. When installing these piston rings to piston, direct marked side of each ring toward top of piston.**
- **1st ring (1) differs from 2nd ring (2) in thickness and shape.**
  Distinguish 1st ring from 2nd ring by referring to figure.
- **When installing oil ring, install spiral ring (3) first and then rail (4).**

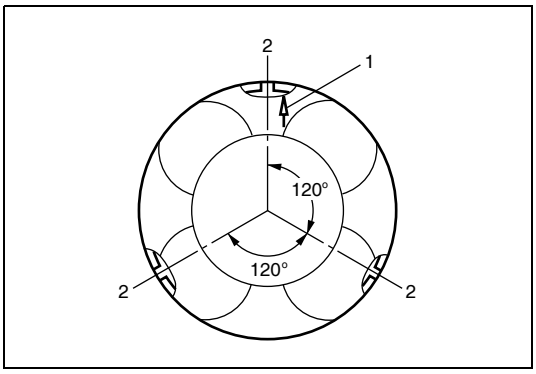

4) After installing three rings (1st, 2nd and oil rings), distribute their end gaps as shown in figure.

1. Arrow mark
2. Ring end gap

Pistons, Piston Rings, Connecting Rods and Cylinder Inspection

Cylinder

Visual inspection

Inspect cylinder walls for scratches, roughness or ridges which indicate excessive wear. If cylinder bore is very rough, deeply scratched or ridged, rebore cylinder and use oversize piston.

Cylinder bore diameter, taper and out-of-round

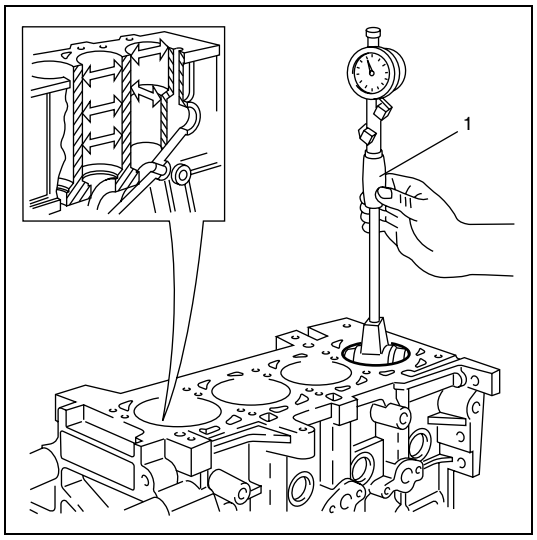

Using a cylinder gauge (1), measure cylinder bore in thrust and axial directions at any positions as shown in figure.
If any of the following conditions is noted, replace cylinder block.

- Difference of measurements at two positions exceeds taper limit.
- Difference between thrust and axial measurements exceeds out-of-round limit.

Cylinder taper difference
Limit: 0.010 mm (0.00039 in.)

Out-of-round difference
Limit: 0.005 mm (0.00020 in.)

Pistons

Visual inspection

Inspect piston for faults, cracks or other damaged.
Damaged or faulty piston should be replaced.

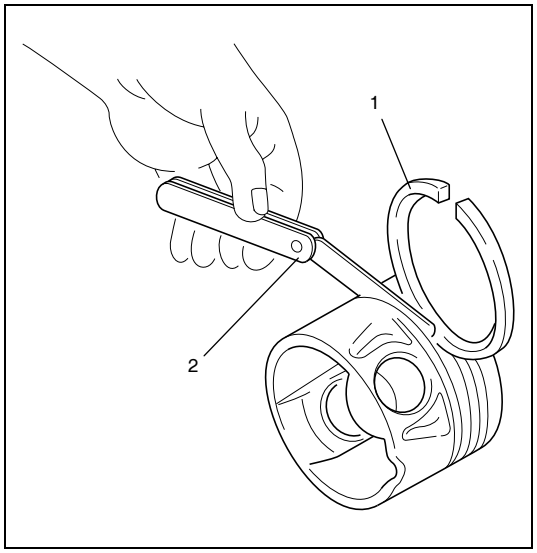

Ring groove clearance

Before checking, piston grooves must be clean, dry and free of carbon deposits.
Fit new piston ring (1) into piston groove, and measure clearance between ring and ring land by using thickness gauge (2). If clearance is out of specification, replace piston ring and/or piston.

Ring groove clearance
Top ring:
0.09 – 0.13 mm (0.0036 – 0.0051 in.)
2nd ring:
0.04 – 0.08 mm (0.0016 – 0.0031 in.)
Oil ring:
0.030 – 0.070 mm (0.00119 – 0.00275 in.)

Piston Pin

- Check piston pin, connecting rod small end bore and piston bore for wear or damage, paying particular attention to condition of small end bore bush. If pin, connecting rod small end bore or piston bore is badly worn or damaged, replace pin, connecting rod and/or piston.

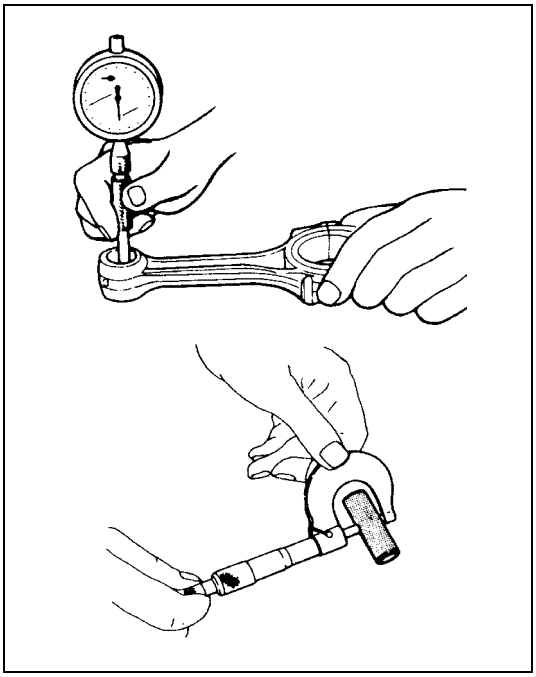

- Piston pin diameter:
  Measure piston pin diameter, connecting rod small end bore and piston bore.
  If it is out of specification, replace piston, piston pin and/or connecting rod.

Piston pin diameter
22.982 – 22.987 mm (0.90481 – 0.90500 in.)

Connecting rod small-end bore
22.990 – 22.996 mm (0.90512 – 0.90535 in.)

Piston bore
23.006 – 23.012 mm (0.90575 – 0.90598 in.)

Piston Rings

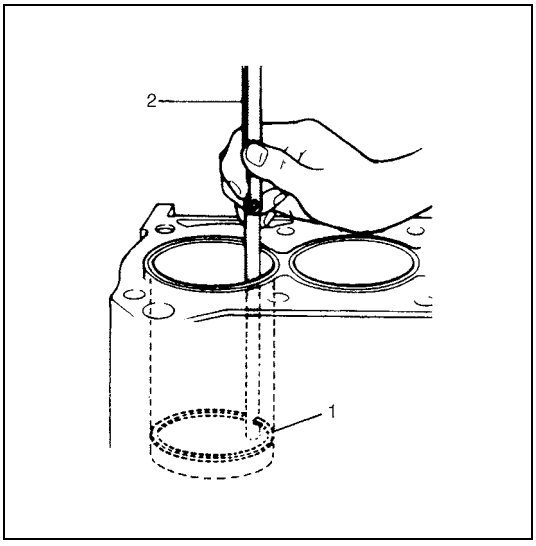

Piston ring end gap
To measure end gap, insert piston ring (1) into cylinder bore and then measure the gap by using thickness gauge (2).
If measured gap is out of specification, replace ring.

NOTE:

Decarbonize and clean top of cylinder bore before inserting piston ring.

Piston ring end gap
Top ring: 0.20 – 0.30 mm (0.0079 – 0.0118 in.)
2nd ring: 1.00 – 1.50 mm (0.0394 – 0.0590 in.)
Oil ring: 0.25 – 0.50 mm (0.0099 – 0.0196 in.)

Connecting Rod

- Connecting rod big end bore and length.

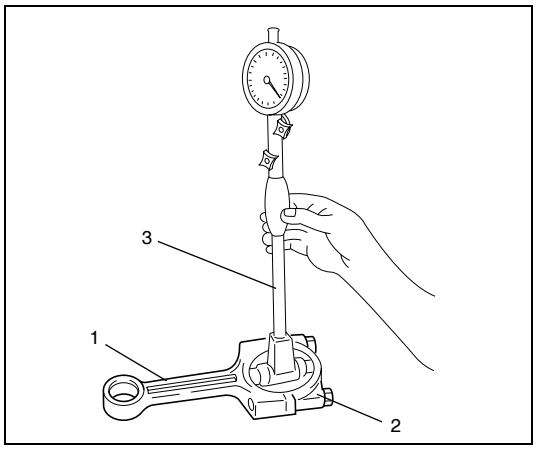

a) Install bearing cap (2) to connecting rod (1).
b) Measure connecting rod big end bore by using bore gauge (3).
If measured bore is out of specification, replace connecting rod and bearing cap as a set.

Big end bore:
45.734 – 45.744 mm (1.80056 – 1.80094 in.)

Crank Pin and Connecting Rod Bearings

Connecting rod bearing general information

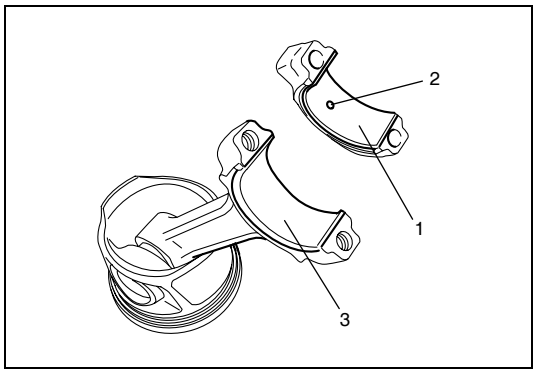

- Connecting rod bearing of cap side (1) has oil hole (2) as shown in figure.
  Install this half with oil hole to connecting rod bearing cap.
- Connecting rod side connecting rod bearing (3) does not have oil hole.

Connecting rod bearing visual inspection

Inspect bearing shells for signs of fusion, pitting, burn or flaking and observe contact pattern. Bearing shells found in defective condition must be replaced.

Connecting rod bearing clearance

NOTE:

Do not rotate crankshaft while gauging plastic is installed.

1) Before checking bearing clearance, clean bearing and crank pin.
2) Install bearing in connecting rod and bearing cap.

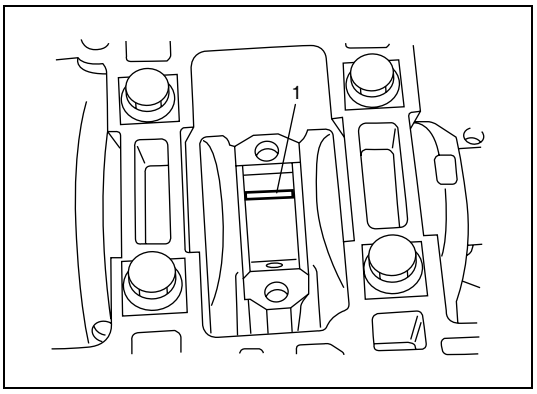

3) Place a piece of gaging plastic (1) to full width of crank pin as contacted by bearing (parallel to crankshaft), avoiding oil hole.
4) Install connecting rod and bearing cap referring to “Pistons, Piston Rings, Connecting Rods and Cylinder Components” in this section.

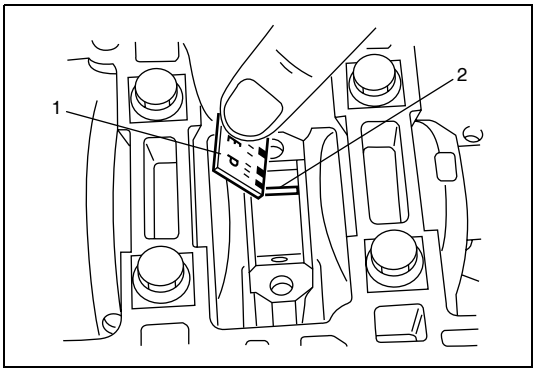

5) Using a scale (1) on gauging plastic (2) envelope, measure gauging plastic width at the widest point (clearance) after removing cap.
   If clearance exceed its specification, replace connecting rod bearing and/or crankshaft.
   After replacing new bearing, recheck clearance.

Connecting rod bearing clearance:
0.030 – 0.062 mm (0.00119 – 0.00244 in.)

Main Bearings, Crankshaft and Cylinder Block Components

CAUTION:

Note original position in which each main bearing were installed, and install them to original position. If each main bearing is not installed to original position, engine will spoil its original performance.

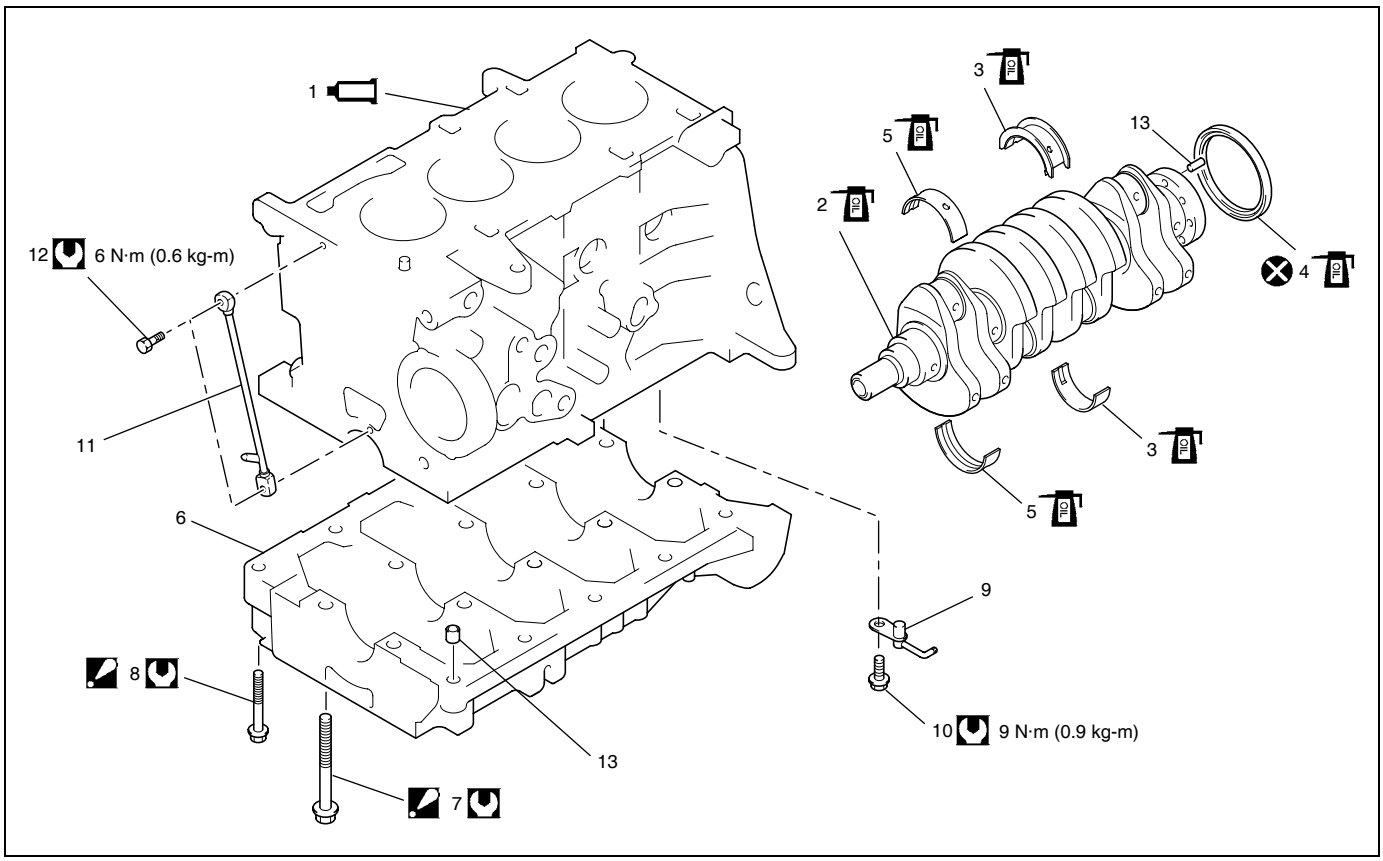

1. Cylinder block : Apply Loctite 5900® referring to "Main Bearings, Crankshaft and Cylinder Block Removal and Installation".	6. Lower crankcase	11. Timing chain oil jet
2. Crankshaft : Apply engine oil to sliding surface.	7. Crankcase bolt (M10) : Tighten 20 N·m (2.0 kg-m, 14.5 lb-ft) and 80° by the specified procedure.	12. Oil jet union bolt
3. Main bearing (with thrust bearing) : Apply engine oil to sliding surface.	8. Crankcase bolt (M8) : Tighten 31 N·m (3.1 kg-m, 22.5 lb-ft) by the specified procedure.	13. Knock pin
4. Flywheel side crankshaft oil seal : Apply engine oil to oil seal lip.	9. Oil jet	Tightening Torque
5. Main bearing : Apply engine oil to bearing inside surfaces.	10. Oil jet bolt	Do not reuse.

Main Bearings, Crankshaft and Cylinder Block Removal and Installation

CAUTION:

Note original position in which each main bearing were installed, and install them to original position.
If each main bearing is not installed to original position, engine will spoil its original performance.

NOTE:

- **All parts to be installed must be perfectly clean.**
- **Be sure to apply oil to crankshaft journals, main bearings, main bearing (with thrust bearing), crankpins, connecting rod bearings, pistons, piston rings and cylinder bores.**

Removal

1) Remove engine assembly from engine compartment referring to “Engine Assembly Removal and Installation” in this section.
2) Remove cylinder head assembly referring to “Valves and Cylinder Head Assembly Removal and Installation” in this section.
3) Remove CKP sensor referring to “Crankshaft position (CKP) sensor (engine speed sensor) removal and installation” in Section 6E3.
4) Remove heater outlet pipe referring to “Cooling System Component” in Section 6B3.
5) Remove oil cooler assembly referring to “Oil Cooler Removal and Installation” in this section.
6) Remove generator referring to “Generator Dismounting and Remounting” in Section 6H3.
7) Remove starting motor referring to “Starting Motor Dismounting and Remounting” in Section 6G3.

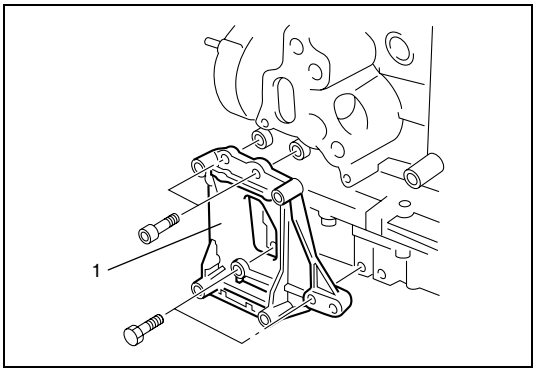

8) Remove A/C compressor bracket (1), if equipped.

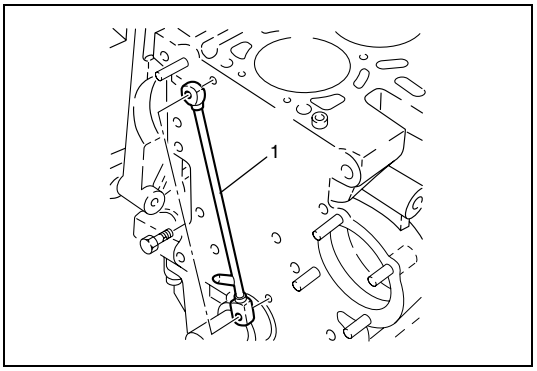

9) Remove timing chain oil jet (1) from cylinder block.

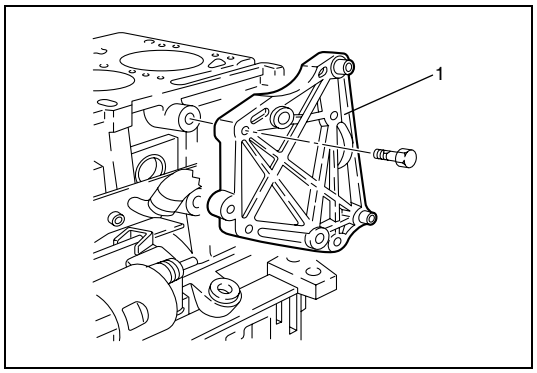

10) Remove generator bracket (1) from cylinder block.
11) Remove crank ventilation cover from cylinder block referring to “Oil separator and crankcase ventilation cover removal and installation” in Section 6E3.
12) Remove piston and connecting rod referring to “Pistons, Piston Rings, Connecting Rods and Cylinder Removal and Installation” in this section.

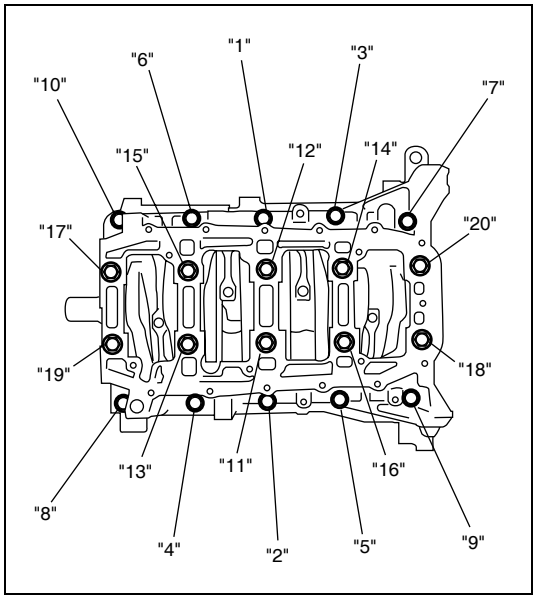

13) Loosen crankcase bolt (M10) and crankcase bolt (M8) in numerical order as shown in figure a little at a time, and remove them.

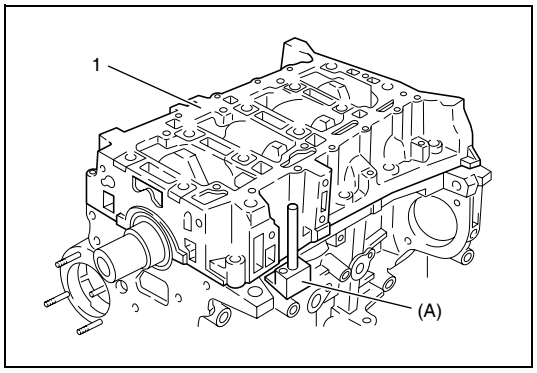

14) Remove lower crankcase (1) from cylinder block using special tool.

Special tool
(A): 0921-96510

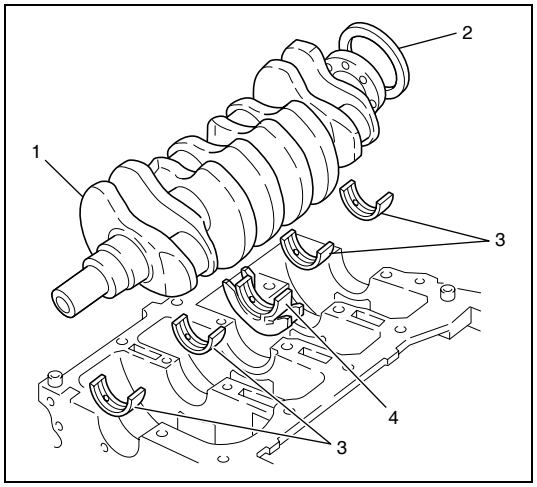

15) Remove crankshaft (1) and flywheel side crankshaft oil seal (2) from cylinder block.
16) Remove main bearings (3) and main bearing (with thrust bearing) (4) from cylinder block and lower crankcase.

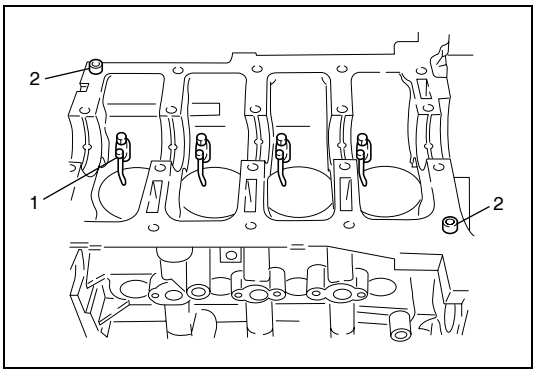

17) Remove oil jet (1) from cylinder block, if necessary.
18) Remove knock pin (2) from cylinder block, if necessary.

Installation

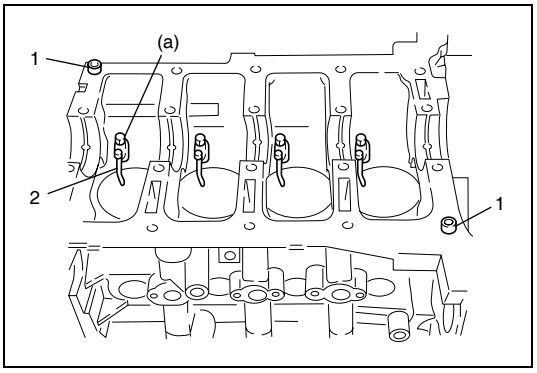

1) Install knock pin (1) to cylinder block, if removed.
2) Install oil jet (2) to cylinder block, if removed.

Tightening torque
Oil jet bolt
(a): 9 N·m (0.9 kg-m, 6.5 lb-ft)

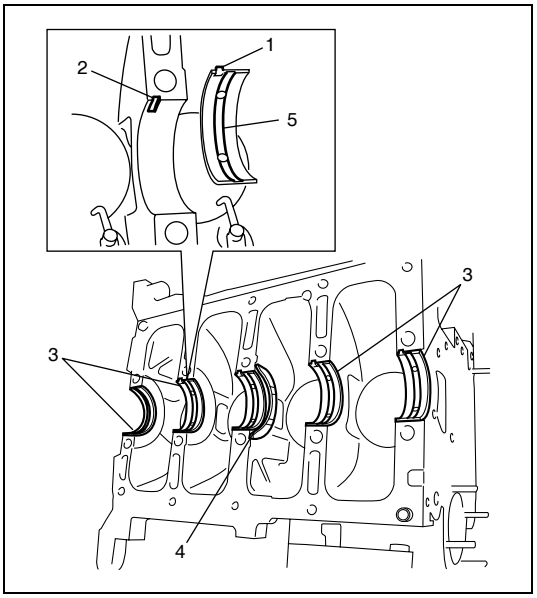

3) Install main bearings (3) and main bearings (with thrust bearing) (4) to cylinder block and lower crankcase aligning tab (1) with gap (2).

NOTE:
One of two halves of main bearing has an oil groove (5). Install it to cylinder block, and the other half without oil groove to lower crankcase.
Make sure that two halves are painted in the same color.

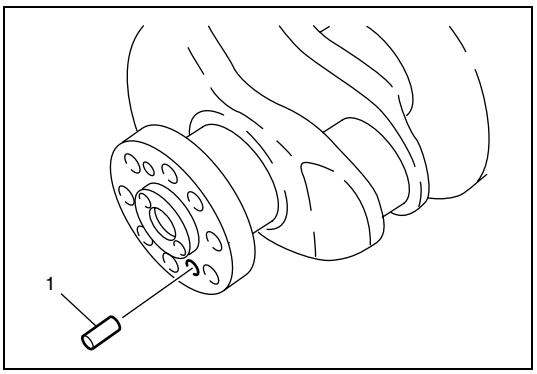

4) Install knock pin (1) to crankshaft, if removed.

NOTE:
Be sure to install knock pin to ϕ 6.75 mm (0.266 in.) hole of crankshaft.

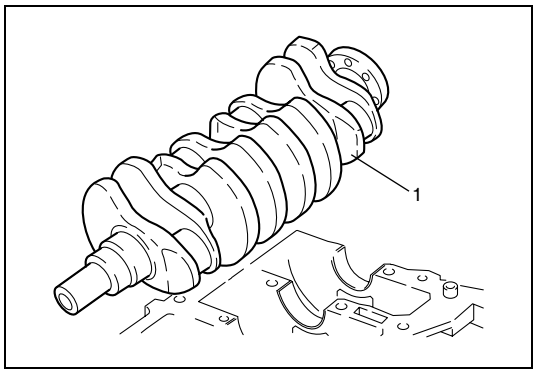

5) Install crankshaft (1) to cylinder block.

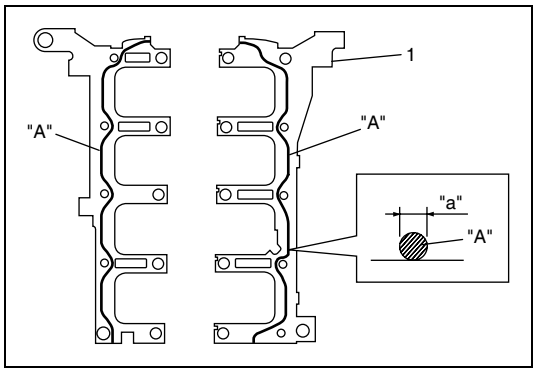

6) Apply sealant to cylinder block (1) as shown in figure.

"A": Loctite 5900®

7) Install lower crankcase to cylinder block.

"a": 3.0 mm (0.118 in.)

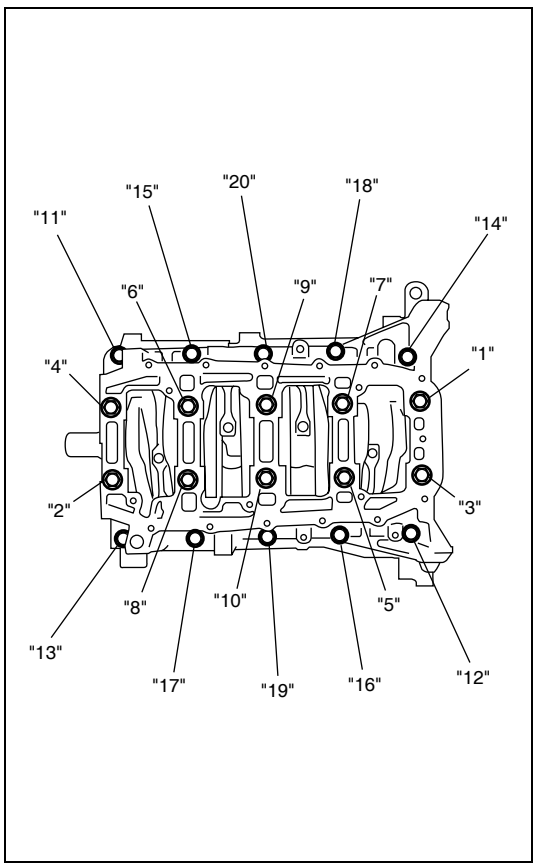

8) Tighten crankcase bolts (M10) ("1" – "10") and crankcase bolts (M8) ("11" – "20") as follows.

NOTE:

Tighten these bolts in numerical order as indicated in figure in this procedure.

a) Tighten crankcase bolts (M10) to 20 N·m (2.0 kg-m, 14.5 lb-ft).
b) Retighten by turning crankcase bolts (M10) to 80°.
c) Tighten crankcase bolts (M8) to 30 N·m (3.0 kg-m, 22.0 lb-ft).

Tightening torque
crankcase bolt (M10):
Tighten 20 N·m (2.0 kg-m, 14.5 lb-ft) and 80° by the specified procedure
crankcase bolt (M8):
Tighten 30 N·m (3.0 kg-m, 22.0 lb-ft) by the specified procedure

NOTE:

After tightening lower crankcase bolts, check to be sure that crankshaft rotates smoothly.

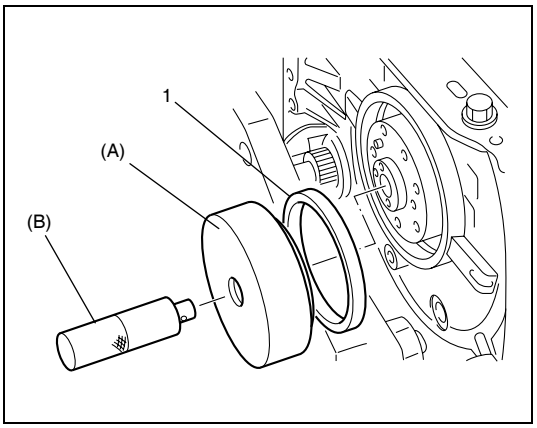

9) Using special tools, install flywheel side crankshaft oil seal (1) as follows.

Special tool
(A): 09913-58620
(B): 09924-74510

a) Fit crankshaft oil seal to special tool (A).
b) Install special tool (B) to special tool (A), and install crankshaft oil seal by tapping special tool (B) lightly with a plastic hammer.
c) Remove special tool (A) and (B).

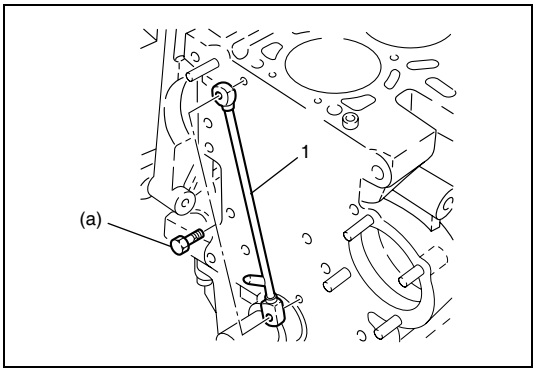

10) Install timing chain oil jet (1) to cylinder block.

Tightening torque
Oil jet union bolt
(a): 6 N·m (0.6 kg-m, 4.5 lb-ft)

11) Install piston and connecting rod referring to “Pistons, Piston Rings, Connecting Rods and Cylinder Removal and Installation” in this section.

12) Install crank ventilation cover to cylinder block referring to “Oil separator and crankcase ventilation cover removal and installation” in Section 6E3.

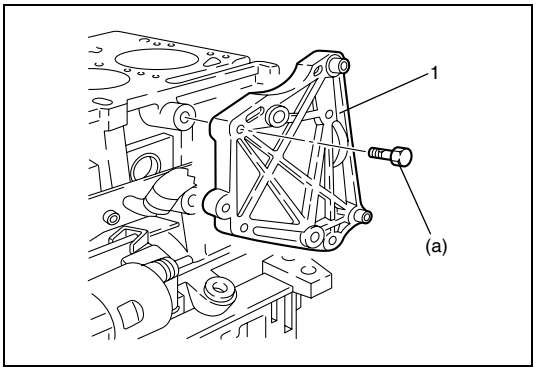

13) Install generator bracket (1) to cylinder block.

Tightening torque
Generator bracket bolt
(a): 25 N·m (2.5 kg-m, 18.0 lb-ft)

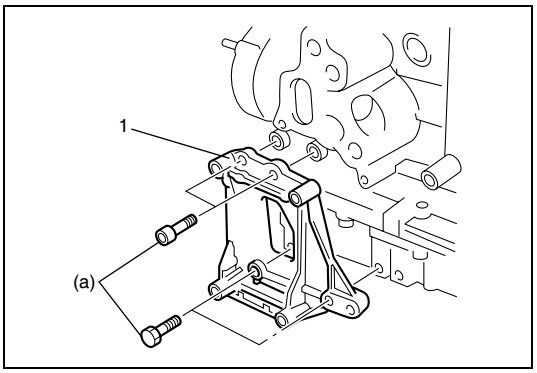

14) Install A/C compressor bracket (1), if removed.

Tightening torque
A/C compressor bracket bolt
(a): 20 N·m (2.0 kg-m, 14.5 lb-ft)

15) Install starting motor referring to “Starting Motor Dismounting and Remounting” in Section 6G3.
16) Install generator referring to “Generator Dismounting and Remounting” in Section 6H3.

17) Install oil cooler assembly referring to “Oil Cooler Removal and Installation” in this section.
18) Install heater outlet pipe referring to “Cooling System Component” in Section 6B3.

19) Install CKP sensor referring to “Crankshaft position (CKP) sensor (engine speed sensor) removal and installation” in Section 6E3.
20) Install cylinder head assembly referring to “Valves and Cylinder Head Assembly Removal and Installation” in this section.
21) Install engine assembly to engine compartment referring to “Engine Assembly Removal and Installation” in this section.

Main Bearings, Crankshaft and Cylinder Block Inspection

Crankshaft Thrust Play

1) Install main bearing, main bearing (with thrust bearing), crankshaft and lower crankcase referring to “Main Bearings, Crankshaft and Cylinder Block Removal and Installation” in this section.

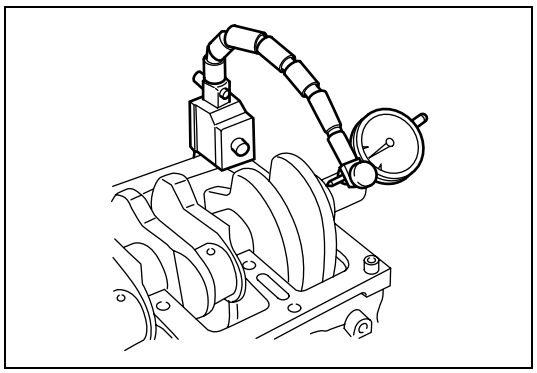

2) Using a dial gauge, measure displacement in axial (thrust) direction of crankshaft.
   If measured value is out of specification, replace main bearing (with thrust bearing).

Crankshaft thrust play
0.055 – 0.265 mm (0.00217 – 0.01043 in.)

Main Bearing

General information

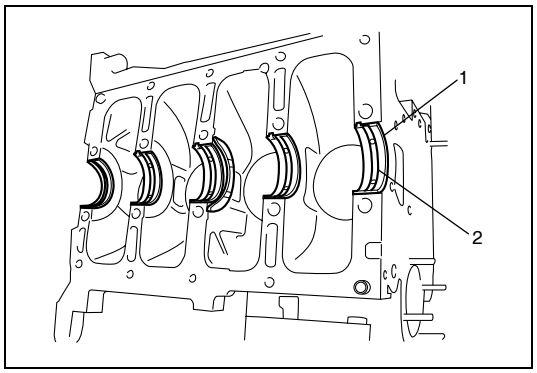

- Upper half of bearing (1) has oil groove (2) as shown in figure.
  Install this half with oil groove to cylinder block.
- Lower half of bearing does not have oil groove.

Visual inspection

Check bearings for pitting, scratches, wear or damage.
If any malcondition is found, replace both upper and lower halves.
Never replace either half without replacing the other half.

Main bearing clearance

NOTE:

Do not rotate crankshaft while gauging plastic is installed.

1) Before checking bearing clearance, clean bearing and crankshaft journal.
2) Install bearing to cylinder block and main bearing cap referring to “Main Bearings, Crankshaft and Cylinder Block Removal and Installation” in this section.

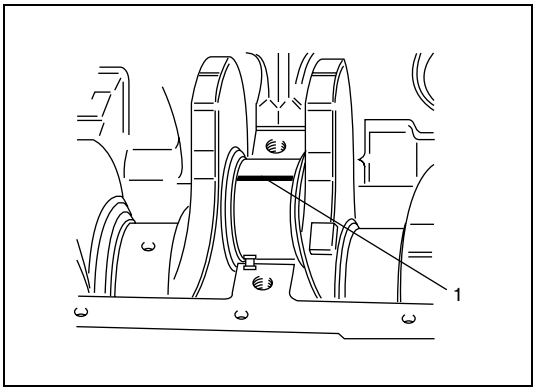

3) Place a piece of gauging plastic (1) to full width of crankshaft journal as contacted by bearing (parallel to crankshaft), avoiding oil hole.
4) Install lower crankcase referring to “Main Bearings, Crankshaft and Cylinder Block Removal and Installation” in this section.

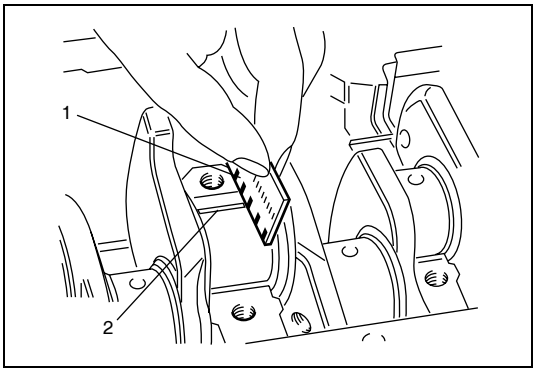

5) Remove cap and using a scale (1) on gauging plastic (2) envelope, measure gauging plastic width at the widest point (clearance).
   If clearance is out of specification, replace bearing. Always replace both upper and lower bearing as a set.

Main bearing clearance:
0.026 – 0.050 mm (0.00103 – 0.00196 in.)

Flywheel side crankshaft oil seal

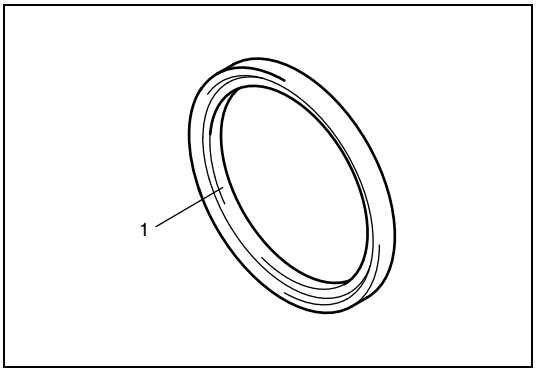

Carefully inspect flywheel side crankshaft oil seal (1) for wear or damage.
If its lip is worn or damaged, replace it.

Special Tool

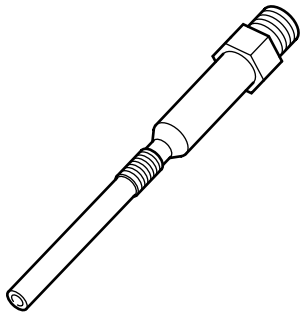 09915-68610 Dummy heater plug	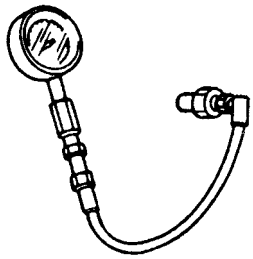 09912-57821 Compression gauge	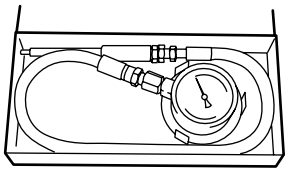 09915-77311 Oil pressure gauge	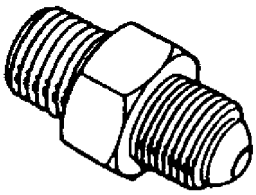 09919-46010 Oil pressure gauge attachment
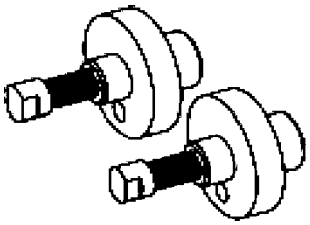 09917-68610 (EN-46781) Camshaft locking tool	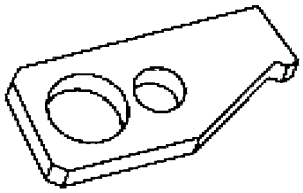 09916-98610 (KM-652) Flywheel locking tool	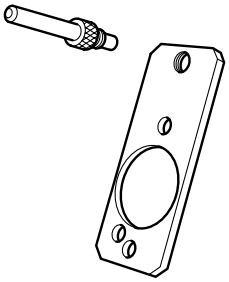 09912-38300 Crankshaft locking tool	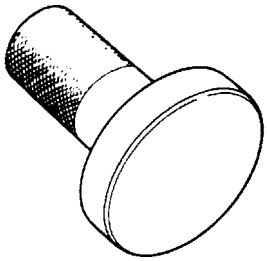 09913-75510 Oil seal installer
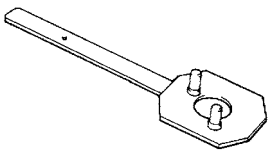 09917-68221 Camshaft lock holder	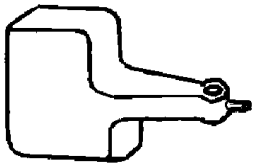 09910-26510 (OUT 0000005) Dial gauge support	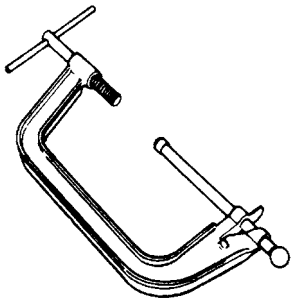 09916-14510 Valve lifter	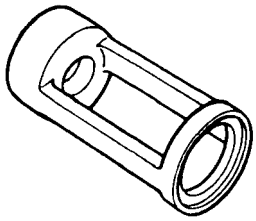 09916-14521 Valve lifter attachment
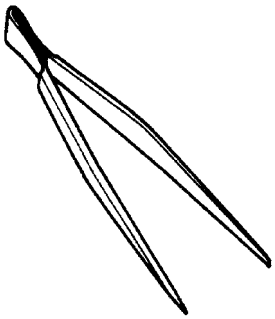 09916-84511 Forceps	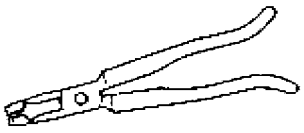 09917-98610 (KM-840) Valve stem seal pliers	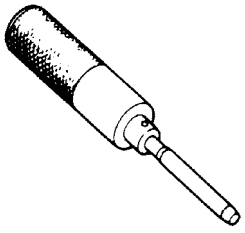 09916-58210 Valve guide installer handle	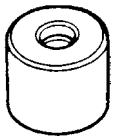 09917-98221 Valve stem seal installer

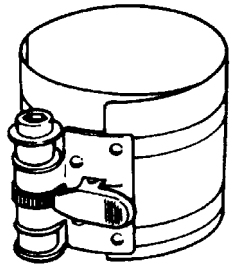	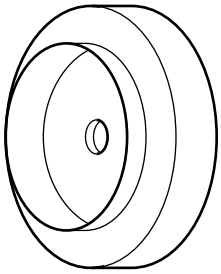	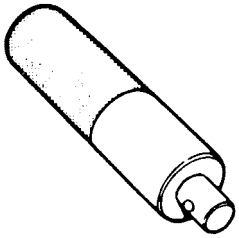	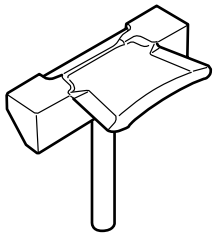
09916-77310 Piston ring compressor	09913-58620 Oil seal installer	09924-74510 Installer attachment	09921-96510 Oil pan seal cutter

Tightening Torque Specifications

Fastening part	Tightening torque		
	N•m	kg-m	lb-ft
Inter cooler hose clamp	3	0.3	2.5
Catalytic converter bolt	25	2.5	18.0
Catalytic converter mounting bolt	25	2.5	18.0
Turbocharger nut	25	2.5	18.0
Exhaust manifold cover nut	9	0.9	7.0
Vacuum pump bolt	Tighten 5 N·m (0.5 kg-m, 4.0 lb-ft) and 20 N·m (2.0 kg-m, 14.5 lb-ft) by the specified procedure		
Oil return pipe bolt	9	0.9	7.0
Lubrication pipe union bolt	12	1.2	9.0
Battery terminal nut	6	0.6	4.0
Intake manifold bolt	25	2.5	18.0
Oil level gauge guide mounting bolt	9	0.9	6.5
Exhaust manifold nut	23	2.3	17.0
Coolant feed pipe bolt	10	1.0	7.5
Common rail bracket bolt	25	2.5	18.0
Oil pump relief valve plug	20	2.0	14.5
Oil pressure switch	32	3.2	23.5
Oil filler port bolt	9	0.9	7.0
Oil cooler bolt	9	0.9	7.0
Oil pan bolt and nut	9	0.9	7.0
Oil level switch bolt	9	0.9	6.5
Drain plug	20	2.0	14.5
Engine rear mounting bolt	55	5.5	40.0
Engine left mounting nut	55	5.5	40.0
Engine right mounting bracket bolt	55	5.5	40.0
Cross member bolt	60	6.0	43.0
Chain guide mounting bolt	9	0.9	6.5
Chain tensioner mounting bolt	9	0.9	6.5
Chain tensioner adjuster bolt	Tighten 9.0 N·m (0.9 kg-m, 6.5 lb-ft) by the specified procedure		

Fastening part	Tightening torque		
	N•m	kg-m	lb-ft
Timing chain cover bolt	9	0.9	6.5
Timing chain cover nut	9	0.9	6.5
Fly wheel bolt	Tighten 44 N·m (4.4 kg-m, 32.0 lb-ft) by the specified procedure		
Crankshaft pulley flange bolt	230	23.0	166.5
Crankshaft pulley bolt	26	2.6	19.0
Engine right mounting bracket No.2 bolt	60	6.0	43.5
Ventilation connector bolt	10	1.0	7.5
Oil strainer bolt	6	0.6	4.5
Camshaft housing bolt	Tighten 18 N·m (1.8 kg-m, 13.0 lb-ft) by the specified procedure		
Camshaft housing stud bolt	Tighten 25 N·m (2.5 kg-m, 18.0 lb-ft) by the specified procedure		
Camshaft timing sprocket bolt	Tighten 120 N·m (12.0 kg-m, 87.0 lb-ft) by the specified procedure		
Camshaft gear bolt	Tighten 120 N·m (12.0 kg-m, 87.0 lb-ft) by the specified procedure		
Cylinder head bolt	Tighten 20 N·m (2.0 kg-m, 14.5 lb-ft), 40 N·m (4.0 kg-m, 29.0 lb-ft) 90° and 90° by the specified procedure		
Connecting rod bearing cap bolt	Tighten 20 N·m (2.0 kg-m, 14.5 lb-ft) and 40° by the specified procedure		
Oil jet bolt	9	0.9	6.5
Crankcase bolt (M10)	Tighten 20 N·m (2.0 kg-m, 14.5 lb-ft) and 40° by the specified procedure		
Crankcase bolt (M8)	Tighten 30 N·m (3.0 kg-m, 22.0 lb-ft) by the specified procedure		
Oil jet union bolt	6	0.6	4.5
Generator bracket bolt	25	2.5	18.0
A/C compressor bracket bolt	20	2.0	14.5

Required Service Material

Recommended SUZUKI product or specification	Use
Loctite 5900®	• To apply mating surfaces between cylinder block and oil pan. • To apply mating surfaces between camshaft housing / cylinder head / cylinder block and timing chain cover gasket.
Loctite omnifit 100M spezial®	• To apply thread part of camshaft housing plug.
Locking Compound	• To apply all around thread part of part of plug.

SECTION 6B3

ENGINE COOLING (Z13DT ENGINE)

WARNING:

For vehicles equipped with a Supplemental Restraint (Air Bag) System:

- **Service on and around the air bag system components or wiring must be performed only by an authorized SUZUKI dealer. Refer to "Air Bag System Components and Wiring Location View" under "General Description" in air bag system section in order to confirm whether you are performing service on or near the air bag system components or wiring. Please observe all WARNINGS and "Service Precautions" under "On-Vehicle Service" in air bag system section before performing service on or around the air bag system components or wiring. Failure to follow WARNINGS could result in unintentional activation of the system or could render the system inoperative. Either of these two conditions may result in severe injury.**
- **Technical service work must be started at least 90 seconds after the ignition switch is turned to the "LOCK" position and the negative cable is disconnected from the battery. Otherwise, the system may be activated by reserve energy in the Sensing and Diagnostic Module (SDM).**

CONTENTS

General Description 6B3-2
Cooling System Circulation 6B3-2
Coolant Degassing Tank 6B3-3
Diagnosis 6B3-3
Diagnosis Table 6B3-3
Coolant 6B3-4
Maintenance 6B3-4
Coolant Level Check 6B3-5
Cooling System Inspection and Service 6B3-5
Cooling System Flush and Refill 6B3-6
Water Pump / Generator Drive Belt Tension Inspection 6B3-7
On-Vehicle Service 6B3-8
Cooling System Component 6B3-9
Cooling System Draining 6B3-11
Cooling System Refill 6B3-11
Cooling Water Pipes or Hoses 6B3-11
Thermostat Case Assembly Removal and Installation 6B3-12
Radiator Removal and Installation 6B3-13
Radiator Inspection 6B3-14
Radiator Cleaning 6B3-14
Radiator Cooling Fan Relay Inspection 6B3-14
Radiator Cooling Fan Removal and Installation 6B3-14
Radiator Cooling Fan Inspection 6B3-15
Water Pump / Generator Drive Belt Removal and Installation 6B3-15
Water Pump / Generator Drive Belt Tensioner Assembly Removal and Installation 6B3-16
Water Pump Removal and Installation 6B3-17
Water Pump Inspection 6B3-17
Engine Coolant Temperature Sensor (ECT Sensor) Removal and Installation 6B3-18
Engine Coolant Temperature Sensor (ECT Sensor) Inspection 6B3-18
Required Service Material 6B3-18
Tightening Torque Specification 6B3-18

General Description

The cooling system consists of the degassing tank cap, radiator, degassing tank, hoses, water pump, cooling fan, thermostat. The radiator is of tube-and-fin type.

Cooling System Circulation

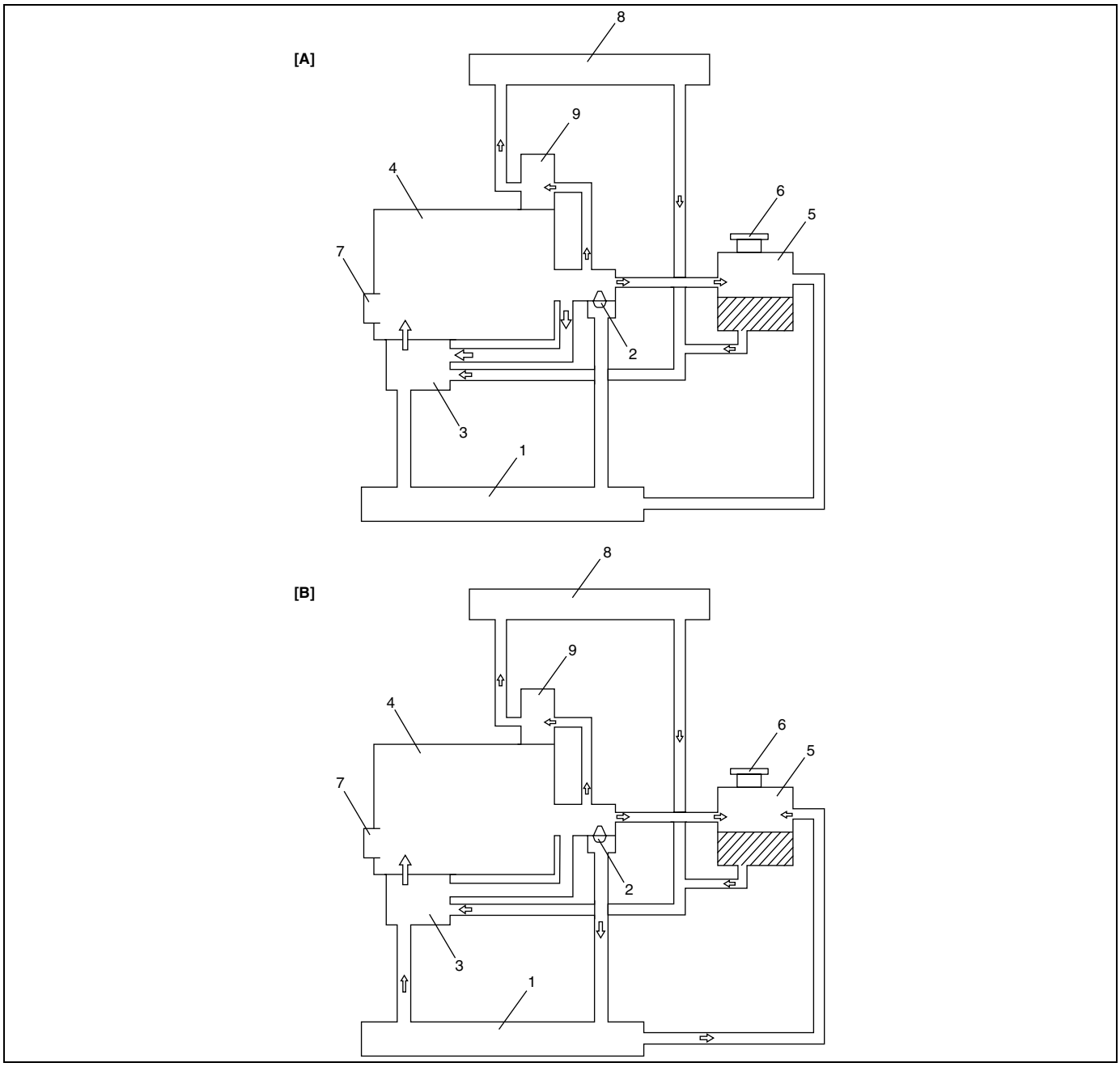

[A]: When thermostat is close	2. Thermostat	5. Degassing tank	8 Heater
[B]: When thermostat is open	3. Engine oil cooler	6. Degassing tank cap (Radiator cap)	9. EGR cooler
1. Radiator	4. Engine	7. Water pump	

Coolant Degassing Tank

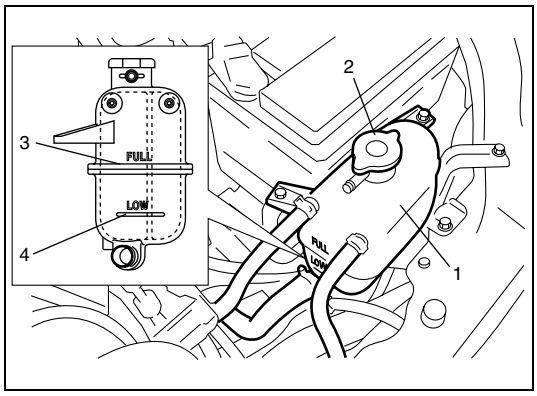

The degassing tank (1) consists of a “see-through” plastic tank, a hose and a degassing tank cap (2).
During operation, inside of the degassing tank is under pressure. As the coolant warms up and expands, the coolant level in the degassing tank rises. On the other hand, it lowers as the coolant cools down and contracts. When the pressure applied to the inside of the degassing tank constantly exceeds the specified value, the pressure is relieved through the degassing tank cap.
Therefore, cooling level should be between “FULL” (3) and “LOW” (4) marks on the degassing tank.

Diagnosis

Diagnosis Table

Condition	Possible Cause	Correction
Engine overheats (It is in case that radiator fan operates)	Loose or broken water pump belt	Adjust or replace.
	Not enough coolant	Check coolant level and add as necessary.
	Faulty thermostat	Replace.
	Faulty water pump	Replace.
	Dirty or bent radiator fins	Clean or remedy.
	Coolant leakage on cooling system	Repair.
	Clogged radiator	Check and replace radiator as necessary.
	Faulty degassing tank cap	Replace.
	Dragging brakes	Adjust brake.
	Slipping clutch	Adjust or replace.
	Poor charge battery	Check and replace as necessary.
	Poor generation generator	Check and repair.
	ECT sensor faulty	Check and replace as necessary.
	ECM faulty	Check and replace as necessary.
	Wiring or grounding faulty	Repair and necessary.
	Equipped with too much electric load part(s)	Dismount.
	Radiator cooling fan motor faulty	Check and replace as necessary.
Engine overheats (It is in case that radiator fan won’t operates)	Fuse blown	Check 30A fuse of relay/fuse box and check for short circuit to ground.
	Radiator cooling fan relay	Check and replace as necessary.
	ECT sensor faulty	Check and replace as necessary.
	Radiator cooling fan motor faulty	Check and replace as necessary.
	Wiring or grounding faulty	Repair as necessary.
	ECM faulty	Check and replace as necessary.

Coolant

When the system cools down, the coolant is drawn back into the radiator.
The cooling system has been filled at the factory with a quality coolant that is a 50/50 mixture of water and ethylene glycol antifreeze.
This 50/50 mixture coolant solution provides freezing protection to –36 °C (–33 °F).

- Maintain cooling system freeze protection at –36 °C (–33 °F) to ensure protection against corrosion and loss of coolant from boiling.
  This should be done even if freezing temperatures are not expected.
- Add ethylene glycol base coolant when coolant has to be added because of coolant loss or to provide added protection against freezing at temperature lower than –36 °C (–33 °F).

Anti-freeze proportioning chart

Freezing temperature	**°C**	**–36**
	°F	**–33**
Antifreeze/Anticorrosion coolant concentration	**%**	**50**
Ratio of compound to cooling water	**ltr.**	**2.65/2.65**
	US pt.	**5.65/5.65**
	Imp pt.	**4.66/4.66**

Coolant capacity

	Engine, radiator heater and degassing tank etc.
ltr. (US/Imp. pt.)	**5.3 (11.30/9.33)**

NOTE:

- **Alcohol or methanol base coolant or plain water alone should not be used in cooling system at any time as damage to cooling system could occur.**
- **Coolant must be mixed with demineraled water or distilled water.**

Maintenance

WARNING:

- **Keep hands, tools and clothing away from radiator cooling fan to help prevent personal injury. This fan is electric and can turn on whether engine is running or not. The fan can start automatically in response to ECM with ignition switch turned on.**
- **To help avoid danger of being burned, do nut remove degassing tank cap while engine and radiator are still hot.**
  Scalding fluid and steam can be blown out under pressure if cap is taken off too soon.

Coolant Level Check

Coolant Level

WARNING:
To help avoid danger of being burned, do not remove degassing tank cap while engine and radiator are still hot.
Scalding fluid and steam can be blown out under pressure if cap is taken off too soon.

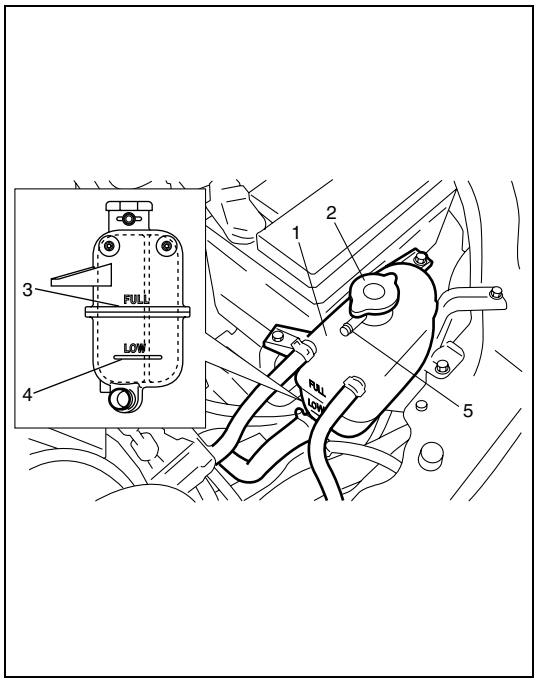

To check level, lift hood and look at “see-through” degassing tank (1). It is not necessary to remove degassing tank cap (2) to check coolant level.
When engine is cool, check coolant level in degassing tank (1).
A normal coolant level should be between “FULL” mark (3) and “LOW” mark (4) on degassing tank (1).
If coolant level is below “LOW” mark, remove degassing tank cap and add recommended coolant to tank to bring coolant level up to “FULL” mark. Then, install degassing tank cap, making sure that the ear of cap lines up with degassing tank pipe (5).

NOTE:

- **If proper quality antifreeze is used, there is no need to add extra inhibitors or additives that claim to improve system.**
  They may be harmful to proper operation of system, and are unnecessary expense.

Cooling System Inspection and Service

WARNING:
To help avoid danger of being burned, do not remove degassing tank cap while engine and radiator are still hot.
Scalding fluid and steam can be blown out under pressure if cap is taken off too soon.

Cooling system should be serviced as follows.

1) Check cooling system for leakage or damage.
2) Wash degassing tank cap and filler neck with clean water by removing degassing tank cap when engine is cold.
3) Check coolant for proper level and freeze protection.

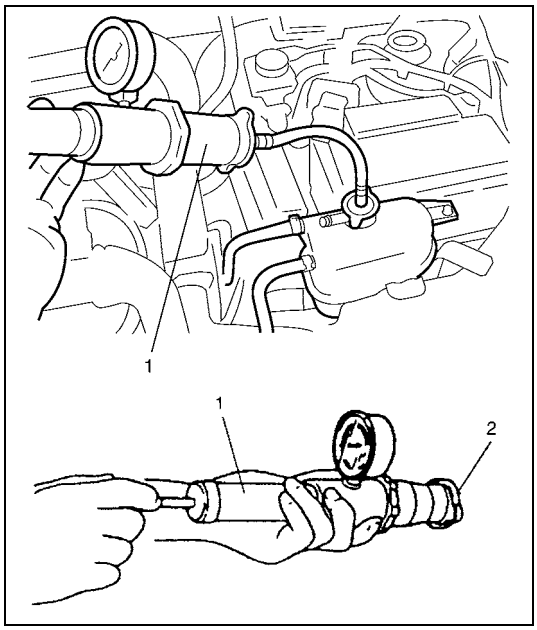

4) Using a pressure tester (1), check system and degassing tank cap (2) for proper pressure holding capacity. If replacement of cap is required, use proper cap specified for this vehicle.

Cooling system and degassing tank cap holding pressure (for inspection)

: 140 kpa (1.4 kg/cm^2, 19.9 psi)

5) Install degassing tank cap to degassing tank turning it clockwise up to stop.
6) Tighten hose clamps and inspect all hoses. Replace hoses whenever cracked, swollen or otherwise deteriorated.
7) Clean frontal area of radiator core.

Cooling System Flush and Refill

WARNING:

To help avoid danger of being burned, do not remove degassing tank cap while engine and radiator are still hot. Scalding fluid and steam can be blown out under pressure if cap is taken off too soon.

1) Remove degassing tank cap when engine is cool:
   Turn cap 90° counterclockwise slowly.
   Wait until pressure is relieved (indicated by a hissing sound) then continue to turn it counterclockwise.
2) With degassing tank cap removed, run engine until upper radiator hose is hot (this shows that thermostat is open and coolant is flowing through system).
3) Stop engine and drain coolant.

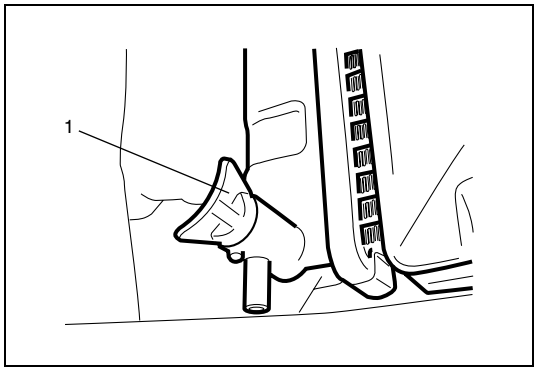

4) Close drain plug (1). Add water until system is filled and run engine until upper radiator hose is hot again.
5) Repeat steps 3) and 4) several times until drained liquid is nearly colorless.
6) Drain system and then close radiator drain plug (1) tightly.

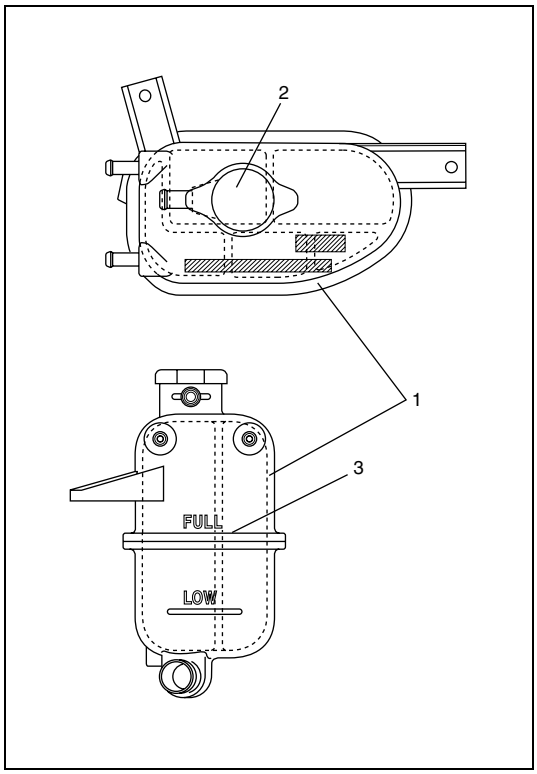

7) Disconnect coolant hose of upper side from thermostat case. If it is hard to disconnect it after removing clip, push to insert hose to pipe a little further in order to unstick hose from pipe and disconnect it.
8) Remove degassing tank cap (2) as follows.
   a) Turn cap 90° counterclockwise slowly.
   b) Wait till any pressure is released, then continue turning it counterclockwise.
9) Pour coolant (50/50 mixture of good quality ethylene glycol antifreeze and water) to degassing tank up to "FULL" mark (3). Put a shop cloth under disconnected hose end so that coolant is not spilled on engine and floor because a small amount of air bubbles and/or coolant may come out of it.
10) Connect hose to thermostat case.
11) Run engine, with degassing tank cap (2) removed, until radiator inlet hose is hot.
12) With engine idling, add coolant to degassing tank (1) until level reaches "FULL" mark (3).
    Install degassing tank cap (2) turning it clockwise up to stop.

Water Pump / Generator Drive Belt Tension Inspection

WARNING:
To help avoid danger of being burned, do not remove degassing tank cap while engine and radiator are still hot. Scalding fluid and steam can be blown out under pressure if cap is taken off too soon.

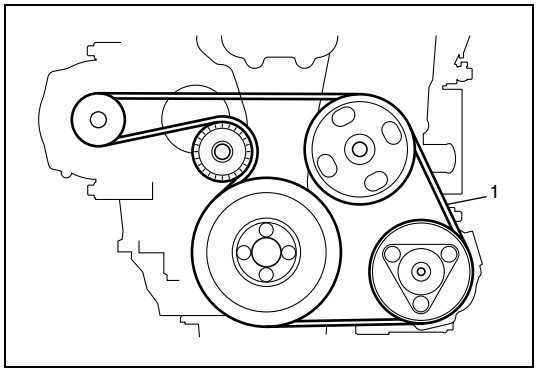

1) Disconnect negative (–) cable at battery.
2) Inspect drive belt (1) for tension, cracks, cuts, deformation, wear and cleanliness. If any defect exists, replace drive belt referring to "Water Pump / Generator Drive Belt Removal and Installation" in this section.
3) Connect negative (–) cable at battery.

On-Vehicle Service

WARNING:

- **Check to make sure that engine coolant temperature is cold before removing any part of cooling system.**
- **Also be sure to disconnect negative cord from battery terminal before removing any part.**

Cooling System Component

For RM413D

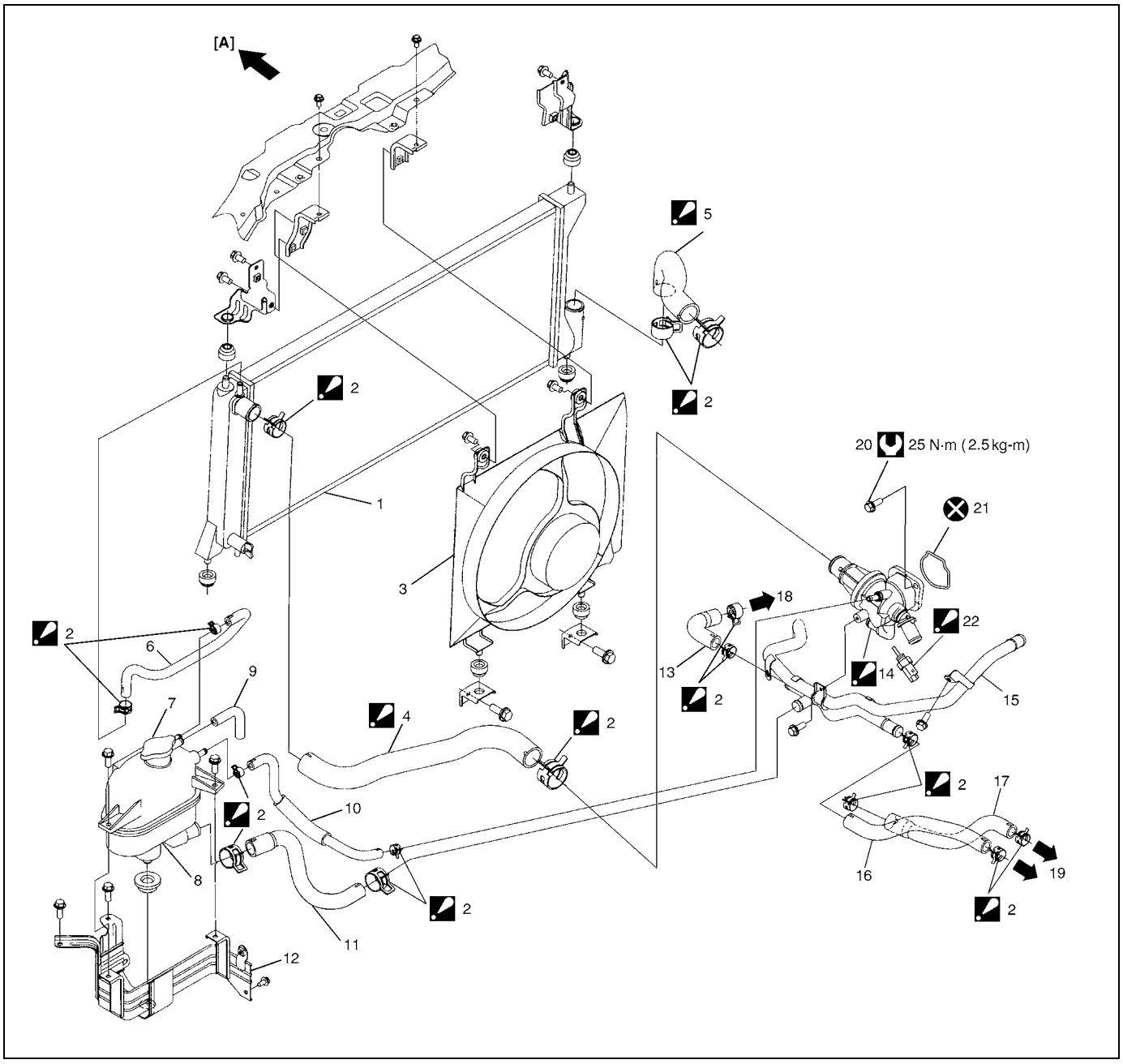

[A]: Forward	9. Reservoir tank vent pipe hose	18. To engine side
1. Radiator assembly	10. Water engine outlet hose	19. To heater side
2. Hose clip Be sure to position clip in specified direction as shown in figure.	11. Degassing tank outlet hose	20. Thermostat case bolt
3. Radiator cooling fan assembly	12. Degassing tank bracket	21. O-ring
4. Radiator inlet hose Be sure to connect hose aligning hose mark with stopper.	13. Heater outlet No.2 hose	22. ECT sensor For detail of servicing, refer to “Engine coolant temperature sensor (ECT sensor) removal and installation” and “Engine coolant temperature sensor (ECT sensor) inspection” in Section 6E3.
5. Radiator outlet hose Be sure to connect hose aligning hose mark with stopper.	14. Thermostat case assembly : Do not disassemble	Do not reuse.
6. Radiator to degassing tank hose	15. Heater outlet pipe	Tightening torque
7. Degassing tank cap	16. Heater outlet No.1 hose	
8. Degassing tank	17. Heater inlet hose	

For RB413D

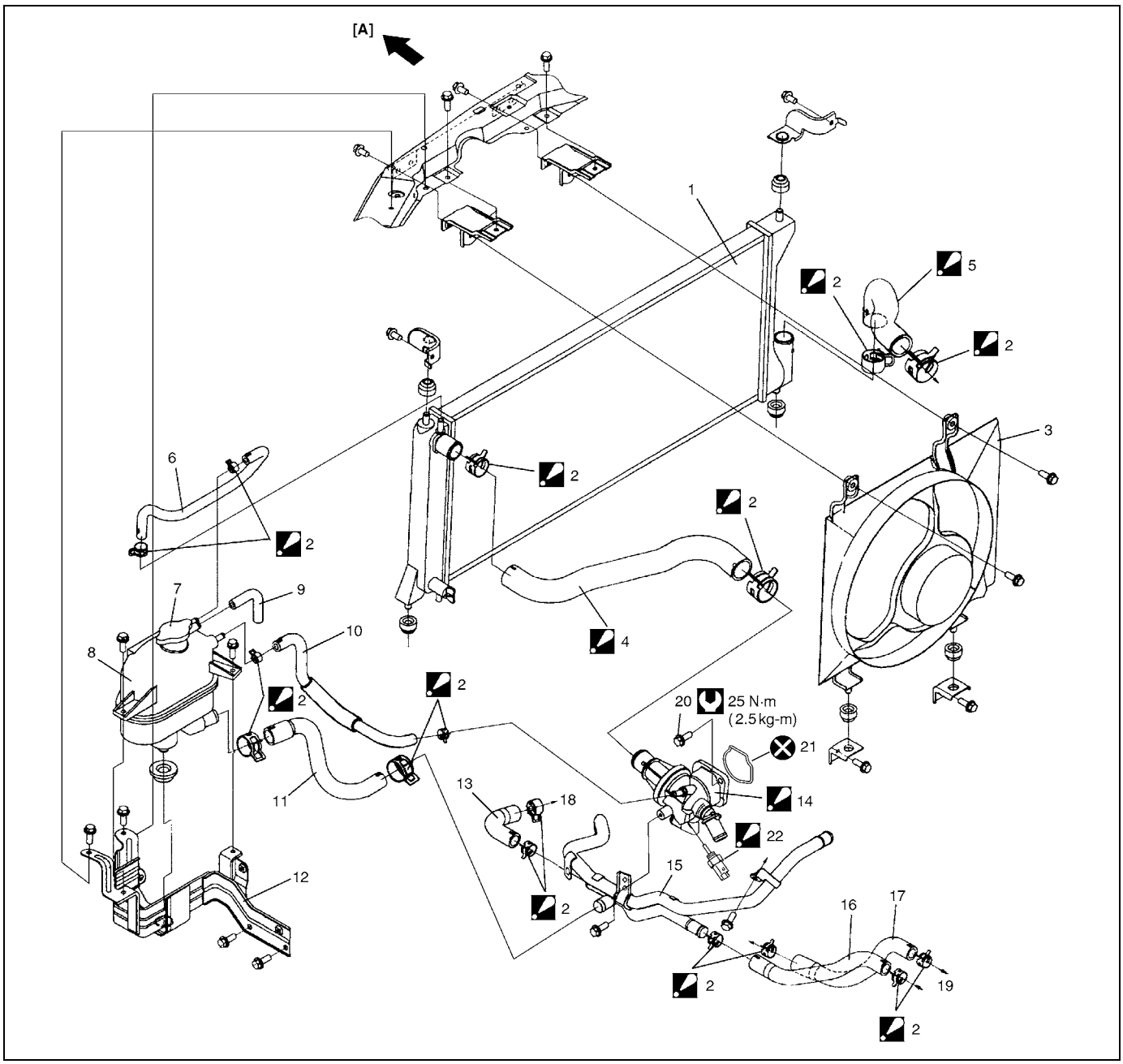

	[A]:	Forward	9.	Reservoir tank vent pipe hose	18. To engine side
	1.	Radiator assembly	10.	Water engine outlet hose	19. To heater side
◢	2.	Hose clip Be sure to position clip in specified direction as shown in figure.	11.	Degassing tank outlet hose	20. Thermostat case bolt
	3.	Radiator cooling fan assembly	12.	Degassing tank bracket	21. O-ring
◢	4.	Radiator inlet hose Be sure to connect hose aligning hose mark with stopper.	13.	Heater outlet No.2 hose	◢ 22. ECT sensor For detail of servicing, refer to “Engine coolant temperature sensor (ECT sensor) removal and installation” and “Engine coolant temperature sensor (ECT sensor) inspection” in Section 6E3.
◢	5.	Radiator outlet hose Be sure to connect hose aligning hose mark with stopper.	◢	14. Thermostat case assembly : Do not disassemble	⊗ Do not reuse.
	6.	Radiator to degassing tank hose	15.	Heater outlet pipe	Tightening torque
	7.	Degassing tank cap	16.	Heater outlet No.1 hose	
	8.	Degassing tank	17.	Heater inlet hose	

Cooling System Draining

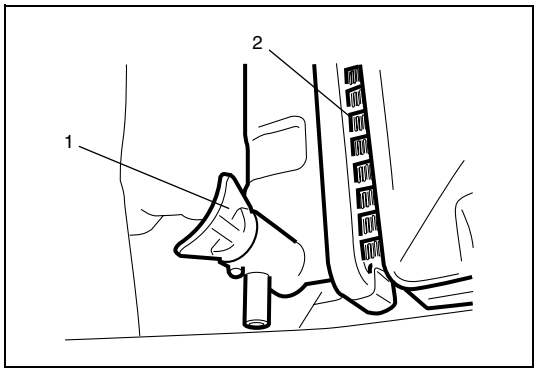

1) Remove degassing tank cap.
2) Loosen drain plug (1) on radiator (2) to drain coolant.
3) After draining coolant, be sure to tighten drain plug securely.

Cooling System Refill

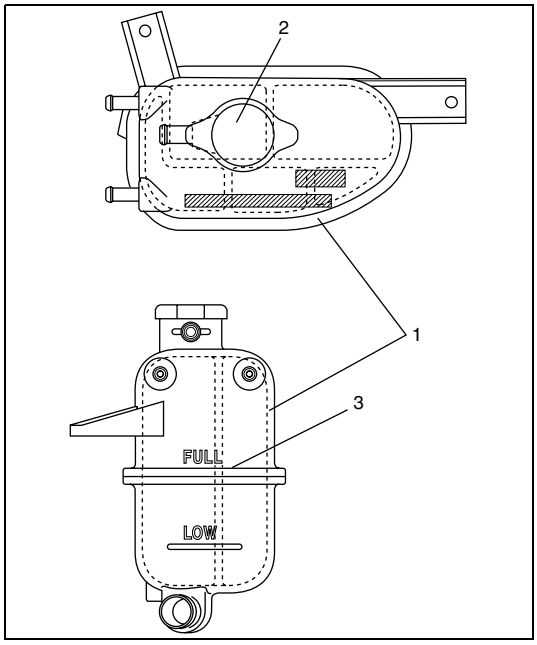

1) Add 50/50 mixture of good quality ethylene glycol antifreeze and water to degassing tank (1).
   Fill to “FULL” mark (3).
2) Run engine, with degassing tank cap (2) removed, until radiator upper hose is hot.
3) With engine idling, add coolant to degassing tank (1) until level reaches “FULL” mark.
   Install degassing tank cap (2) turning it clockwise up to stop.

Cooling Water Pipes or Hoses

Removal

1) Drain coolant referring to “Cooling System Draining” in this section.
2) To remove these pipes or hoses, loosen clip on each hose and pull hose end off.

Installation

Install removed parts in reverse order of removal procedure, noting the following.

- Connect each clip securely referring to “Cooling System Component” in this section.
- Refill cooling system with proper coolant referring to “Cooling System Refill” in this section.

Thermostat Case Assembly Removal and Installation

CAUTION:

Do not disassemble thermostat case assembly. Disassembly will spoil it original function. If any malcondition is found in thermostat case assembly, replace if as assembly.

Removal

1) Drain coolant referring to “Cooling System Draining” in this section.

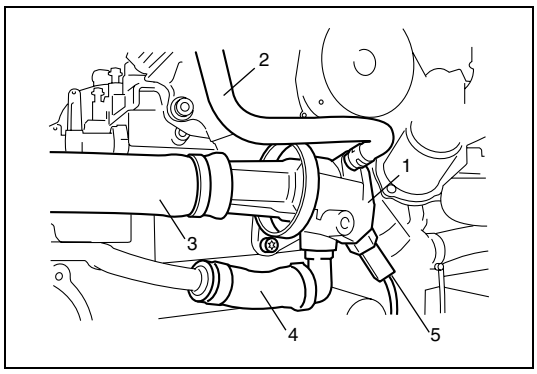

2) Disconnect engine outlet hose (2), radiator inlet hose (3), coolant feed hose (4), ECT sensor connector (5) and thermostat case hose from thermostat case.
3) Remove thermostat case (1).

Installation

Reverse removal procedure for installation noting the following points.

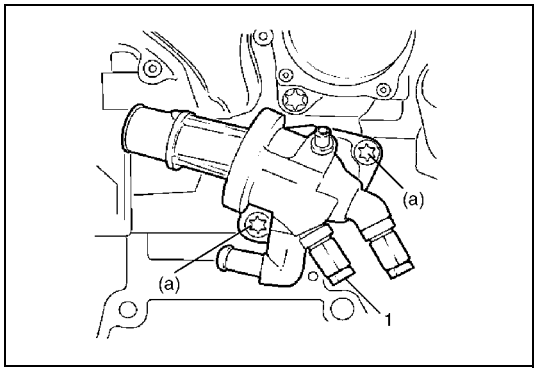

- Use new O-ring when installing.
- Tighten thermostat case bolt to specified torque.

Tightening torque
Thermostat case bolt (a): 25 N·m (2.5 kg-m, 18.0 lb-ft)

- If ECT sensor (1) has been removed, apply thread lock cement to ECT sensor and install ECT sensor to specified torque. For thread lock cement and tightening torque, refer to “Engine coolant temperature sensor (ECT sensor) removal and installation” in Section 6E3.
- Refill cooling system referring to “Cooling System Flush and Refill” in this section.
- Verify that there is no coolant leakage at each connection.

Radiator Removal and Installation

Removal

1) Disconnect negative cable at battery.
2) Drain cooling system referring to “Cooling System Draining” in this section.
3) Recover refrigerant from A/C system referring to “Evacuation of A/C System” for RM413D or “Evacuating and Charging” for RB413D in Section 1B.
4) Disconnect connector of cooling fan motor.
5) Remove front bumper referring to “Front Bumper and Rear Bumper Removal and Installation” for RM413D or “Front Bumper and Rear Bumper” for RB413D in Section 9.
6) Remove condenser assembly referring to “Condenser Assembly Removal and Installation” for RM413D or “A/C Condenser Assembly” for RB413D in Section 1B.
7) Remove inter cooler referring to “Inter Cooler Removal and Installation” in Section 6A3.

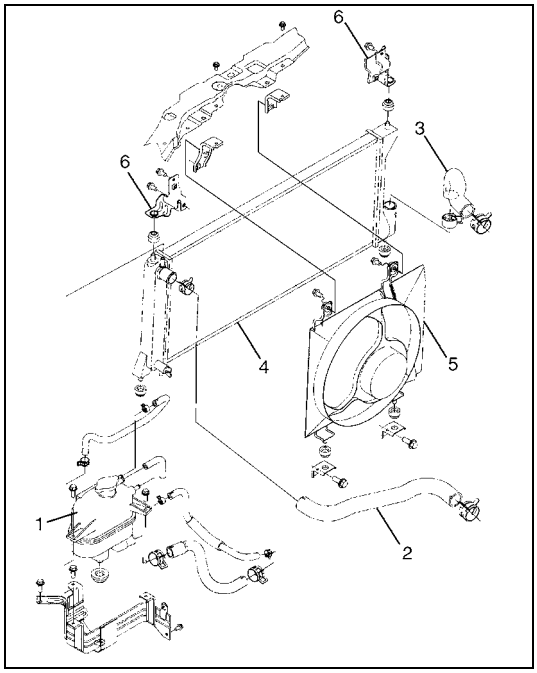

8) Remove degassing tank (1).
9) Disconnect radiator inlet hose (2) and radiator outlet hose (3) from radiator assembly (4).
10) Remove engine cooling fan assembly (5) from radiator.
11) Remove radiator brackets (6) and then remove radiator.

Installation

Reverse removal procedures for installation noting the followings.

- Refill cooling system referring to “Cooling System Refill” in this section.
- Refill A/C system referring to “Charge” for RM413D or “Evacuating and Charging” for RB413D in Section 1B.
- After installation, check each joint for leakage.

Radiator Inspection

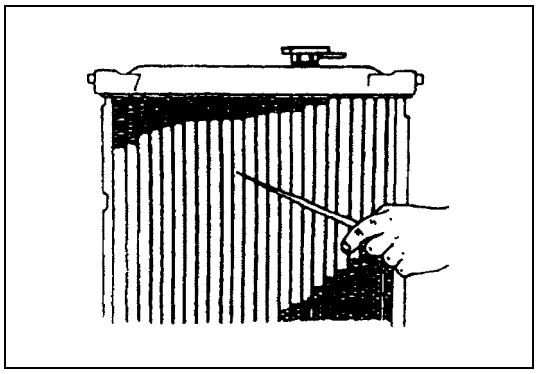

Check radiator for leakage or damage. Straighten bent fins, if any.

Radiator Cleaning

Clean frontal area of radiator cores.

Radiator Cooling Fan Relay Inspection

Refer to “Fuel pump relay and radiator fan relay 1, 2, 3 inspection” in Section 6E3.

Radiator Cooling Fan Removal and Installation

Removal

1) Disconnect negative cable at battery.
2) Drain coolant referring to “Cooling System Draining” in this section.

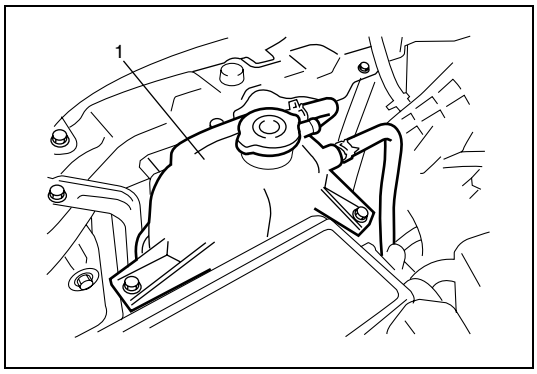

3) Remove degassing tank (1).
4) Disconnect cooling fan motor connector.
5) Remove radiator inlet hose from radiator.

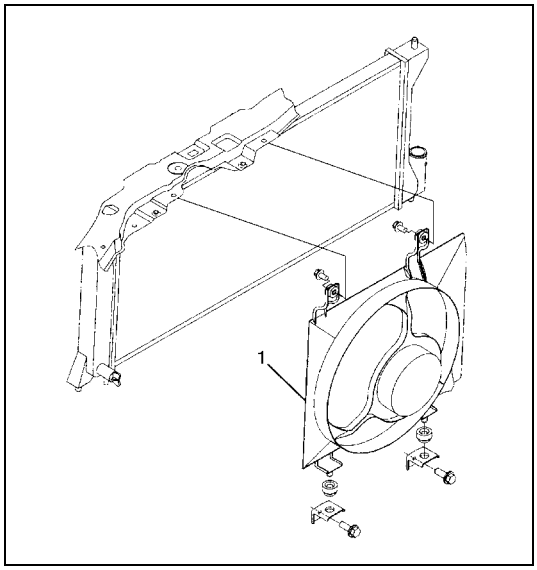

6) Remove radiator cooling fan motor (1) from radiator.

Installation

Reverse removal procedure for installation noting the following.

- Refill cooling system referring to “Cooling System Refill” in this section.
- After installation, verify there is no coolant leakage at each connection.

Radiator Cooling Fan Inspection

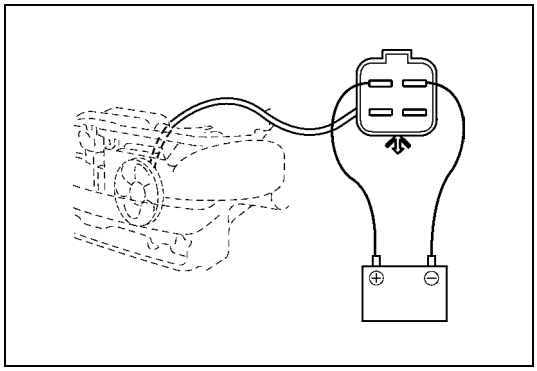

1) Check low speed operation of radiator cooling fan as follows.
   a) Connect battery to fan motor coupler as shown in figure.
   b) Check that radiator cooling fan rotates smoothly and ammeter indicates specified current.
      If any abnormality is found, replace fan motor.

Fan motor specified current at 12 V
10.0 A maximum

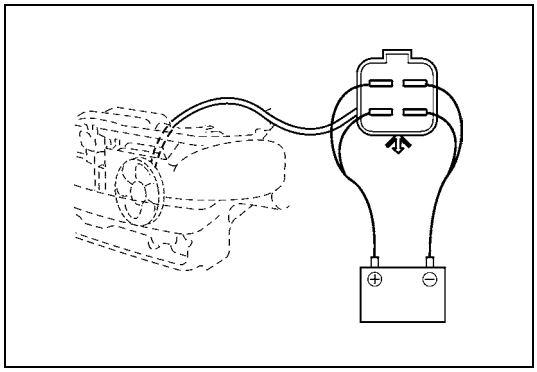

2) Check high speed operation of radiator cooling fan as follows.
   a) Connect battery to fan motor coupler as shown in figure.
   b) Check that radiator cooling fan rotates smoothly and ammeter indicates specified current.
      If any abnormality is found, replace fan motor.

Fan motor specified current at 12 V
15.0 A maximum

Water Pump / Generator Drive Belt Removal and Installation

Removal

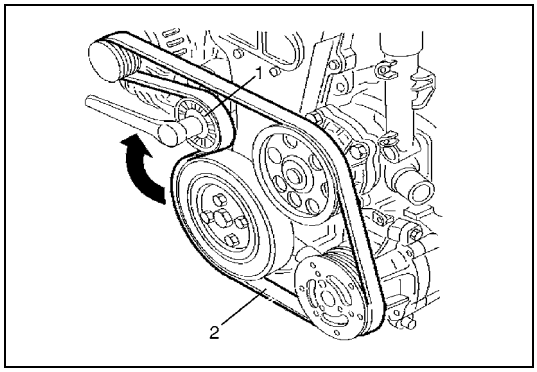

1) Remove drive belt (2) while turning tensioner (1) clockwise until stopping.

Installation

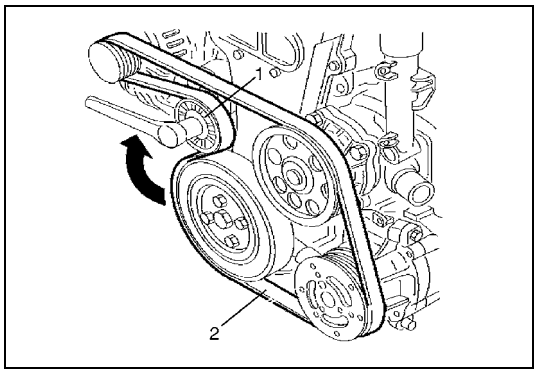

1) Install drive belt (2) while turning tensioner (1) clockwise until stopping.
2) Check drive belt tension referring to “Water Pump / Generator Drive Belt Tension Inspection” in this section.

Water Pump / Generator Drive Belt Tensioner Assembly Removal and Installation

CAUTION:

Do not disassemble drive belt tensioner assembly. Disassembly will spoil its original function. If any malcondition is found in drive belt tensioner assembly, replace it as assembly.

Removal

1) Disconnect negative cable at battery.
2) Remove drive belt referring to “Water Pump / Generator Drive Belt Removal and Installation” in this section.

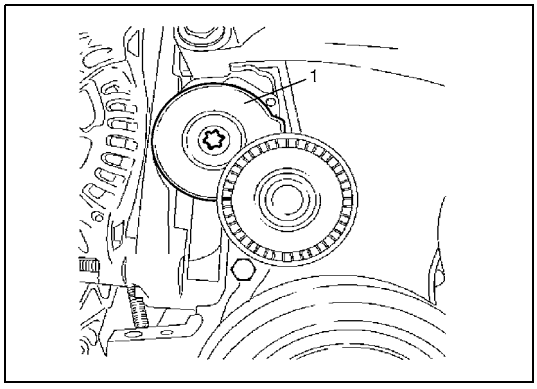

3) Remove tensioner (1).

Installation

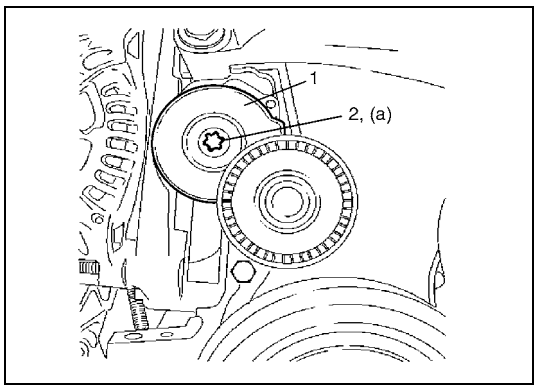

1) Install tensioner (1).
   Tighten tensioner bolt (2) to specified torque.

   Tightening torque
   Tensioner bolt (a): 50 N·m (5.0 kg-m, 36.0 lb-ft)

2) Install drive belt referring to “Water Pump / Generator Drive Belt Removal and Installation” in this section.
3) Check belt tension referring to “Water Pump / Generator Drive Belt Tension Inspection” in this section.

Water Pump Removal and Installation

Removal

1) Drain coolant referring to “Cooling System Draining” in this section.
2) Remove drive belt referring to “Water Pump / Generator Drive Belt Removal and Installation” in this section.

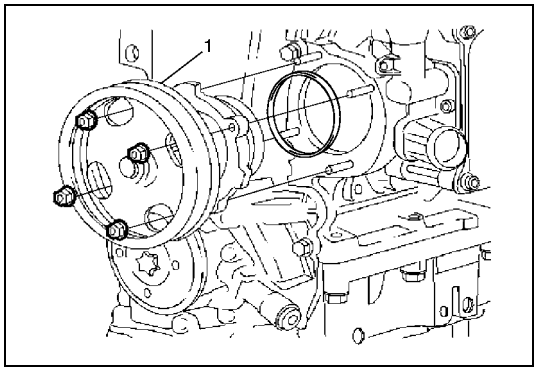

3) Remove water pump assembly (1).

Installation

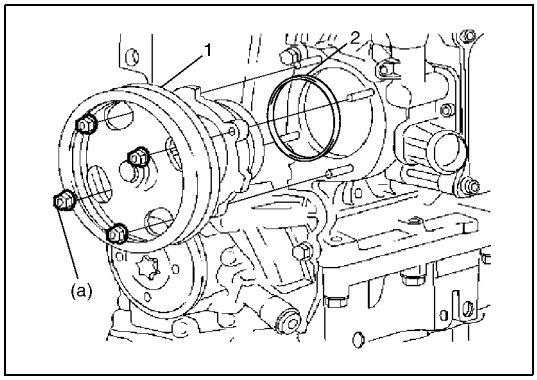

1) Install new O-ring (2) to water pump.
2) Install water pump assembly (1) to cylinder block and tighten nuts to specified torque.

Tightening torque
Water pump nut (a): 9 N·m (0.9 kg-m, 6.5 lb-ft)

3) Install drive belt referring to “Water Pump / Generator Drive Belt Removal and Installation” in this Section.
4) Refill cooling system referring to “Cooling System Flush and Refill” in this section.
5) Check each part for leakage.

Water Pump Inspection

CAUTION:
Do not disassemble water pump.
If any repair is required on pump, replace it as assembly.

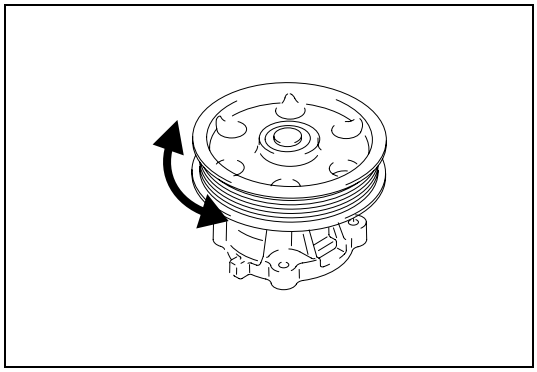

- Rotate water pump by hand to check for smooth operation. If pump does not rotate smoothly or makes abnormal noise, replace it.

Engine Coolant Temperature Sensor (ECT Sensor) Removal and Installation

Refer to “Engine coolant temperature sensor (ECT sensor) removal and installation” in Section 6E3.

Engine Coolant Temperature Sensor (ECT Sensor) Inspection

Refer to “Engine coolant temperature sensor (ECT sensor) inspection” in Section 6E3.

Required Service Material

Material	Recommended SUZUKI product or specification (Part Number)	Use
Ethylene glycol base coolant (Anti-freeze/ Anti-corrosion coolant)	—	Additive to engine cooling system for improving cooling efficiency and for protection against rusting.

Tightening Torque Specification

Fastening part	Tightening torque		
	N•m	kg-m	lb-ft
Thermostat case bolt	25	2.5	18.0
Water pump nut	9	0.9	6.5

SECTION 6C3

ENGINE FUEL (Z13DT ENGINE)

WARNING:

For vehicles equipped with a Supplemental Restraint (Air Bag) System:

- **Service on and around the air bag system components or wiring must be performed only by an authorized SUZUKI dealer. Refer to "Air Bag System Components and Wiring Location View" under "General Description" in air bag system section in order to confirm whether you are performing service on or near the air bag system components or wiring. Please observe all WARNINGS and "Service Precautions" under "On-Vehicle Service" in air bag system section before performing service on or around the air bag system components or wiring. Failure to follow WARNINGS could result in unintentional activation of the system or could render the system inoperative. Either of these two conditions may result in severe injury.**
- **Technical service work must be started at least 90 seconds after the ignition switch is turned to the "LOCK" position and the negative cable is disconnected from the battery. Otherwise, the system may be activated by reserve energy in the Sensing and Diagnostic Module (SDM).**

CONTENTS

General Description 6C3-1
On-Vehicle Service 6C3-2
Fuel System Components 6C3-2
Precautions 6C3-5
Water Draining of Fuel Filter 6C3-6
Air Bleeding of Fuel System 6C3-6
Fuel Line Inspection 6C3-6
Fuel Pipe Removal and Installation 6C3-6
Fuel Filler Cap Inspection 6C3-8
Fuel Tank Inlet Valve Removal and Installation 6C3-8
Fuel Tank Inlet Valve Inspection 6C3-10
Fuel Tank Removal and Installation 6C3-10
Fuel Tank Inspection 6C3-12
Fuel Tank Purging Procedure 6C3-13
Fuel Pump Assembly Removal and Installation 6C3-13
Fuel Pump Inspection 6C3-15
Fuel Filter Element Removal and Installation 6C3-15
Fuel Filter Assembly Removal and Installation 6C3-17
Special Tool 6C3-17
Tightening Torque Specification 6C3-17

General Description

The main components of the fuel system are fuel tank, fuel pump, high pressure fuel pump, fuel filter and fuel level gauge and it includes fuel feed line, fuel return line.

On-Vehicle Service

Fuel System Components

CAUTION:
Do not expose removed fuel parts to dust. Keep them always clean.

For RM413D

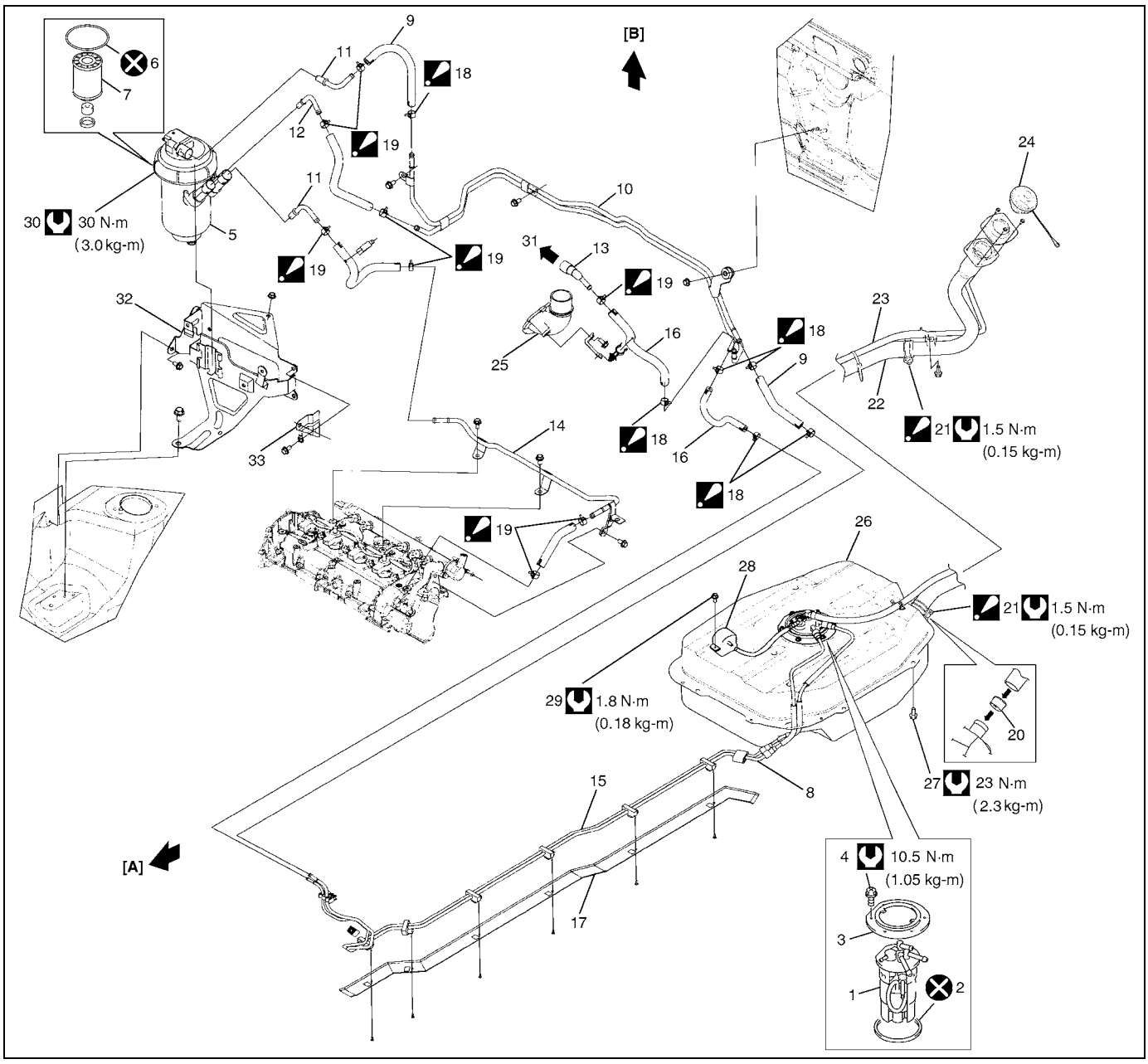

[A]: Forward	12. Fuel filter return joint	25. Air intake joint
[B]: Upward	13. Fuel return connector	26. Fuel tank
1. Fuel pump	14. Fuel No.2 pipe	27. Fuel tank bolt
2. Fuel pump plate gasket	15. Fuel return pipe	28. Fuel and vapor separator
3. Fuel pump plate	16. Fuel return hose	29. Fuel and vapor separator bolt
4. Fuel pump bolt	17. Fuel pipe cover	30. Fuel filter fastener
5. Fuel filter	18. Clip Be sure to position clip open end in forward direction as shown in figure.	31. To common rail
6. O-ring	19. Clip Be sure to position clip open end in upward direction as shown in figure.	32. Fuel filter bracket
7. Fuel filter element	20. Fuel tank inlet valve	33. Harness clamp bracket
8. Fuel feed pipe	21. Fuel filler hose clamp Be sure to position clamp screw in specified place as shown in figure.	Do not reuse.
9. Fuel feed hose	22. Fuel tank filler hose	Tightening torque
10. Fuel No.1 pipe	23. Breather hose	
11. Fuel filter joint	24. Fuel tank cap	

For RB413D

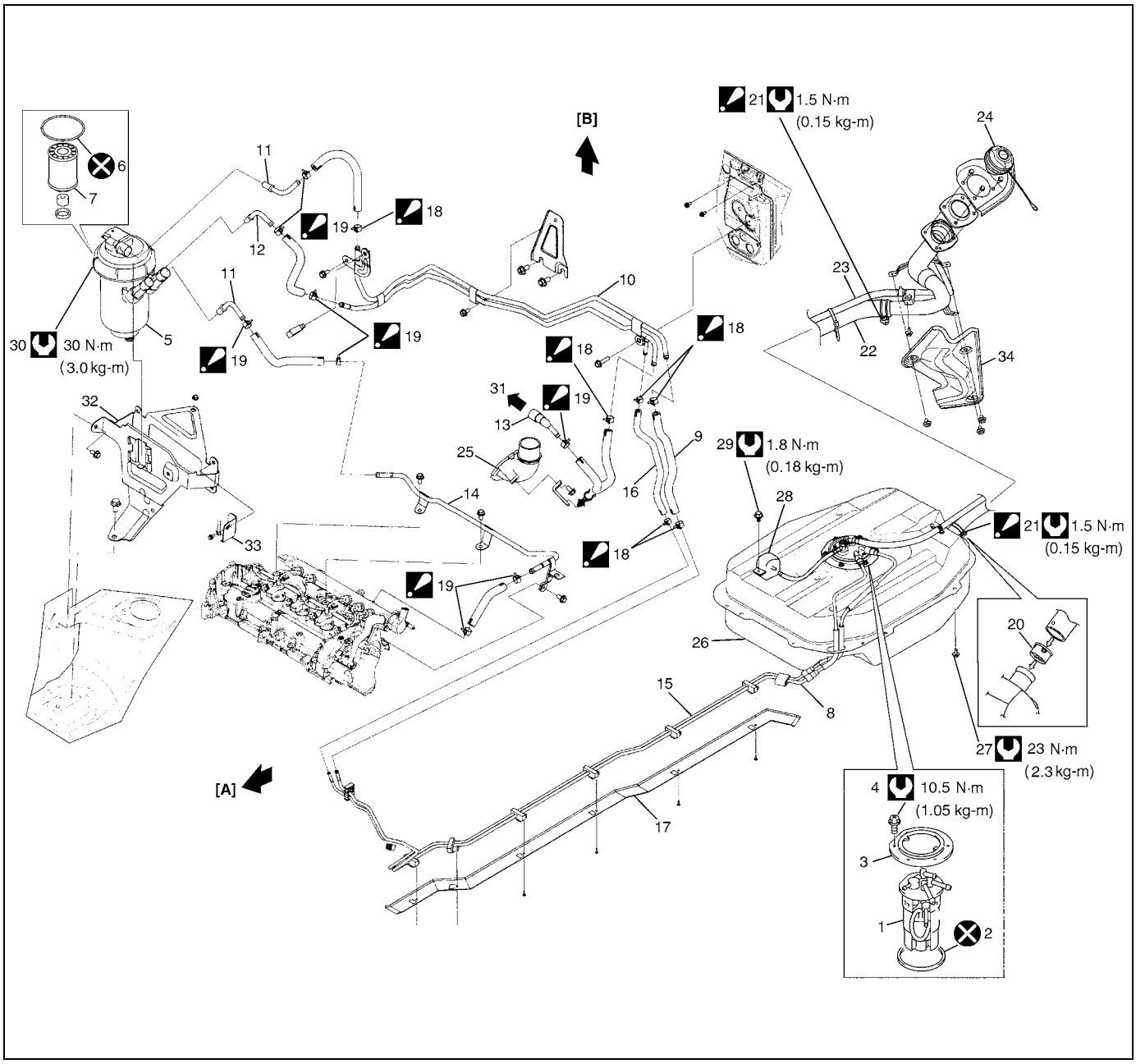

[A]: Forward	12. Fuel filter return joint	25. Air intake joint
[B]: Upward	13. Fuel return connector	26. Fuel tank
1. Fuel pump	14. Fuel No.2 pipe	27. Fuel tank bolt
2. Fuel pump plate gasket	15. Fuel return pipe	28. Fuel and vapor separator
3. Fuel pump plate	16. Fuel return hose	29. Fuel and vapor separator bolt
4. Fuel pump bolt	17. Fuel pipe cover	30. Fuel filter fastener
5. Fuel filter	18. Clip Be sure to position clip open end in forward direction as shown in figure.	31. To common rail
6. O-ring	19. Clip Be sure to position clip open end in upward direction as shown in figure.	32. Fuel filter bracket
7. Fuel filter element	20. Fuel tank inlet valve	33. Harness clamp bracket
8. Fuel feed pipe	21. Fuel filler hose clamp Be sure to position clamp screw in specified place as shown in figure.	34. Fuel filler neck protector
9. Fuel feed hose	22. Fuel tank filler hose	Do not reuse.
10. Fuel No.1 pipe	23. Breather hose	Tightening torque
11. Fuel filter joint	24. Fuel tank cap	

Precautions

[A]

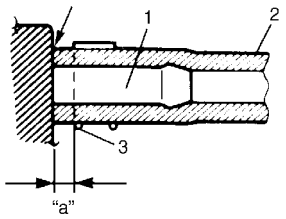

[B]

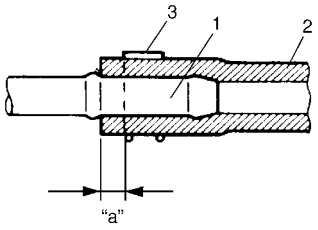

[C]

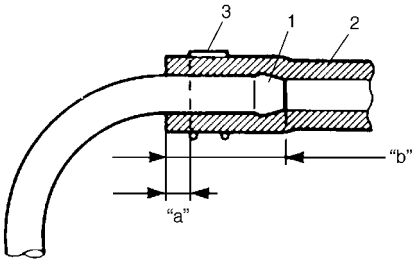

[D]

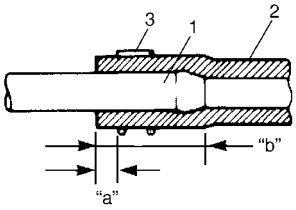

[E]

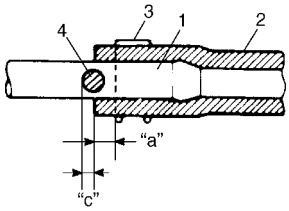

[F]

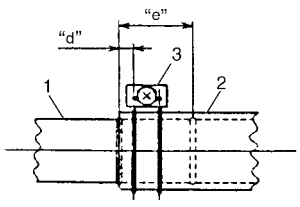

WARNING:

Before attempting service of any type on fuel system, the following should be always observed in order to reduce the risk or fire and personal injury.

- **Disconnect negative cable at battery.**
- **Do not smoke, and place no smoking signs near work area.**
- **Be sure to have CO_2 fire extinguisher handy.**
- **Be sure to perform work in a well-ventilated area and away from any open flames (such as gas hot heater).**
- **Wear safety glasses.**
- **To relieve fuel vapor pressure in fuel tank, remove fuel filler cap from fuel filler neck and then reinstall it.**
- **A small amount of fuel may be released after the fuel line is disconnected. In order to reduce the chance of personal injury, cover the fitting to be disconnected with a shop cloth. Be sure to put that cloth in an approved container when disconnection is completed.**
- **Note that fuel hose connection varies with each type of pipe. Be sure to connect and clamp each hose correctly referring to the figure.**
- **Before disconnecting a fuel hose or pipe, wait 60 seconds or more after engine stop to release pressure in fuel system.**
- **Do not expose removed fuel system parts to dust. Keep them always clean.**

[A]:	With short pipe, fit hose as far as it reaches pipe joint as shown.
[B]:	With the following type pipe, fit hose as far as its peripheral projection as shown.
[C]:	With bent pipe, fit hose as far as its bent part as shown or till depth "b".
[D]:	With straight pipe, fit hose till depth "b".
[E]:	With red marked pipe, fit hose end reaches red mark on pipe.
[F]:	For fuel tank filler hose, insert it to spool or welding-bead.
1.	Pipe
2.	Hose
3.	Clamp
4.	Red mark
"a":	Clamp securely at a position 3 – 7 mm (0.12 – 0.27 in.) from hose end.
"b":	20 – 30 mm (0.79 – 1.18 in.)
"c":	0 – 5 mm (0 – 0.19 in.)
"d":	5 – 12 mm (0.2 – 0.47 in)
"e":	40 mm (1.57 in)

Water Draining of Fuel Filter

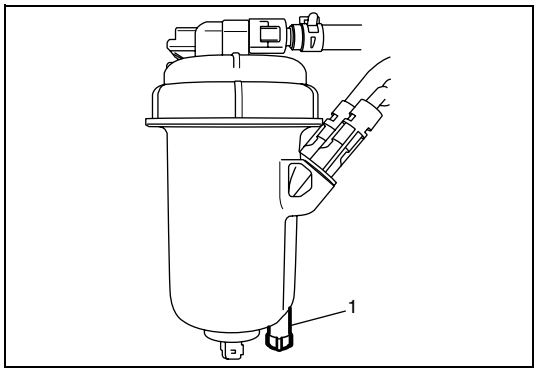

1) Disconnect negative cable at battery.
2) Place container under bleed screw (1), and drain fuel loosening it.
3) Tighten bleed screw.
4) Connect negative cable at battery.

Air Bleeding of Fuel System

Air bleeding must be carried out when fuel system has been disassembled or when vehicle ran out of fuel.
Turn ignition switch ON to operate fuel pump and after about 5 seconds turn it OFF. Repeat this 6 times and then check engine starts.

Fuel Line Inspection

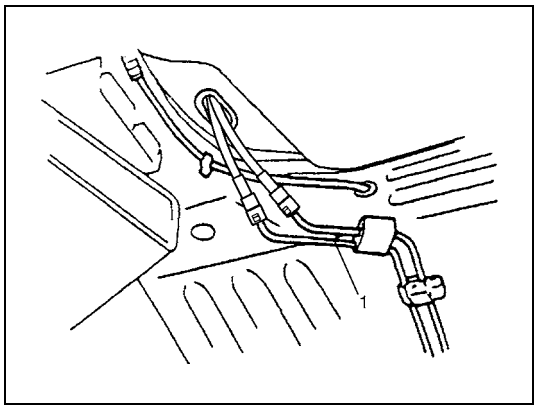

CAUTION:
Due to the fact that fuel feed line (1) is under high pressure, use special care when servicing it.

Visually inspect fuel lines for evidence of fuel leakage, hose crack and deterioration, or damage.
Make sure all clamps are secure.
Replace parts as needed.

Fuel Pipe Removal and Installation

WARNING:
A small amount of fuel may be released after disconnecting fuel hose. In order to reduce the chance of personal injury, cover hose and pipe to be disconnected with a shop cloth.
Be sure to put that cloth in an approved container when disconnection is completed.

Removal

1) Disconnect negative cable at battery.

2) Remove steering gear case assembly. Refer to “Steering Gear Case Removal and Installation” for RM413D or “Manual Rack and Pinion Assembly (Steering Gear Case)” for RB413D in Section 3B.

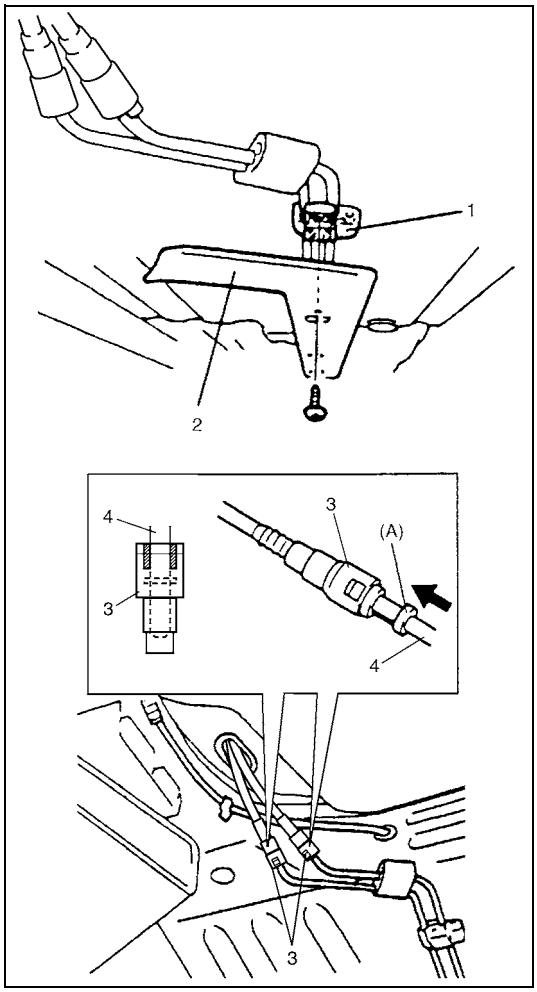

3) Remove pipe cover (2) from vehicle.
4) Disconnect fuel pipe joint and fuel hose from fuel pipe at the front and rear of each fuel pipe.
   For quick joint (3), disconnect it as follows:
   a) Remove mud, dust and/or foreign material between pipe (4) and joint by blowing compressed air.
   b) Unlock joint lock by inserting special tool between pipe and joint.

Special tool
(A): 09919-47020

   c) Disconnect joint (3) from pipe (4).

1. Clamp

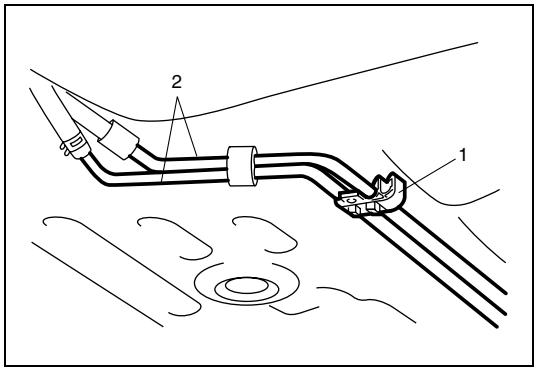

5) Mark the location of clamps (1) on fuel pipes (2), so that the clamps can be reinstalled to where they were.
6) Remove pipes (2) with clamp (1) from vehicle.
7) Remove clamp (1) from pipes (2).

Installation

1) Install clamps to marked location on pipes. If clamp is deformed or its claw is bent or broken, replace it with new one.
2) Install pipes with pipe clamps to vehicle.

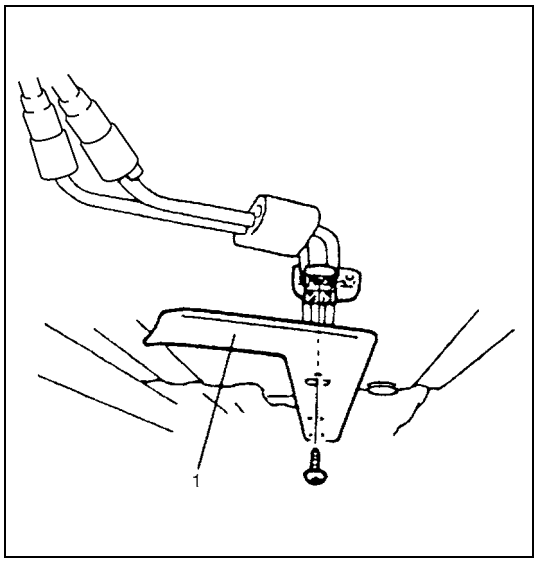

3) Connect fuel hoses and pipes to each pipe.

CAUTION:
When connecting joint, clean outside surfaces of pipe where joint is to be inserted, push joint into pipe till joint lock clicks and check to ensure that pipes are connected securely, or fuel leak may occur.

4) Install pipe cover (1) to vehicle.
5) Install steering gear case referring to "Steering Gear Case Removal and Installation" for RM413D or "Manual Rack and Pinion Assembly (Steering Gear Case)" for RB413D in Section 3B.
6) With engine OFF, turn ignition switch to ON position and check for fuel leaks.

Fuel Filler Cap Inspection

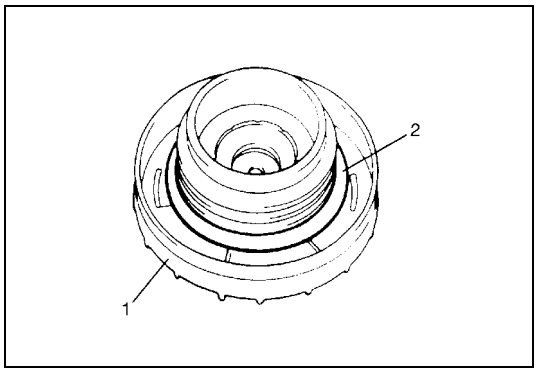

Remove cap (1), and check gasket for even filler neck imprint, and deterioration or any damage. If gasket (2) is in malcondition, replace cap.

NOTE:
If cap requires replacement, only a cap with the same features should be used. Failure to use correct cap can result in critical malfunction of system.

Fuel Tank Inlet Valve Removal and Installation

WARNING:
Before starting the following procedure, be sure to observe "Precautions" in this section.

Removal

1) Remove fuel filler cap.

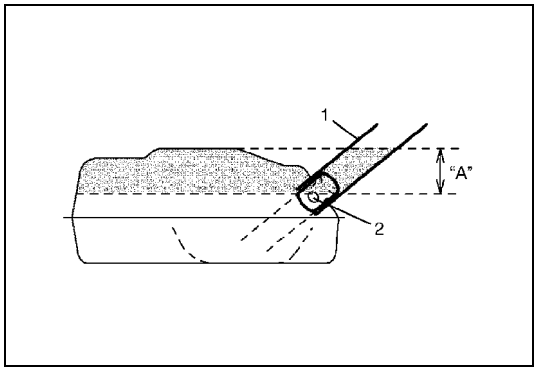

2) Insert hose of a hand operated pump into fuel filler hose (1) and drain fuel in space "A" in the figure.

CAUTION:
Do not force pump hose into fuel tank, or pump hose may damage fuel tank inlet valve (2).

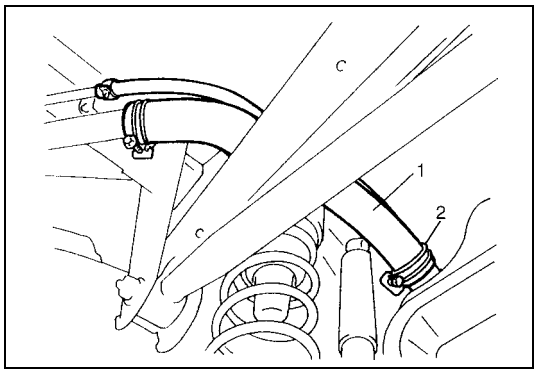

3) Hoist vehicle, and remove clamp (2) and fuel filler hose (1) from fuel tank.

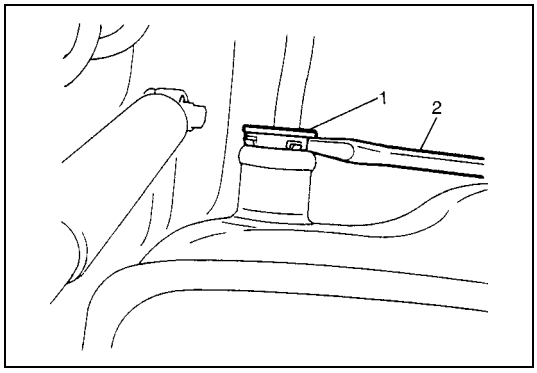

4) Remove fuel tank inlet valve (1) using flat head rod (2) or the like.

CAUTION:
Be careful not to damage fuel tank inlet valve (1) with flat head rod (2) or the like.

Installation

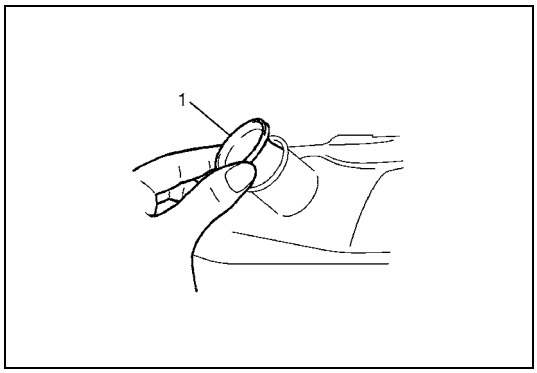

1) Install fuel tank inlet valve (1) to fuel tank.

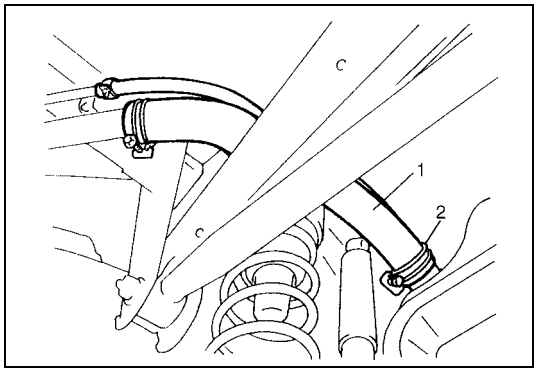

2) Install fuel filler hose (1) to fuel tank and secure it with clamp (2).
   For proper installation, refer to “Fuel System Components” in this section.
3) Lower vehicle and install fuel filler cap.

Fuel Tank Inlet Valve Inspection

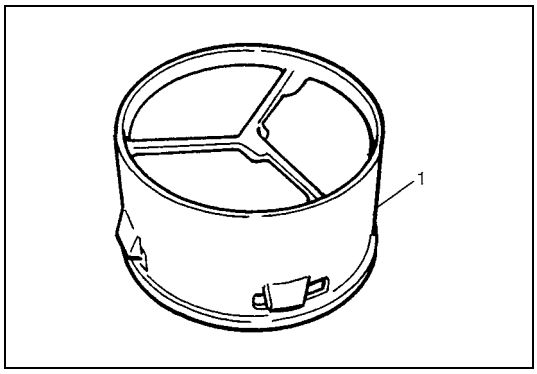

Check fuel tank inlet valve (1) for the following.
- Damage
- Smooth opening and closing

If any damage or malfunction is found, replace.

Fuel Tank Removal and Installation

Removal

WARNING:
- **Before starting the following procedure, be sure to observe "Precautions" in this section.**
- **A small amount of fuel may be released after the fuel hose is disconnected. In order to reduce the chance of personal injury, cover the hose and pipe to be disconnected with a shop cloth. Be sure to put that cloth in an approved container when disconnection is completed.**

1) Disconnect negative cable at battery.
2) Hoist vehicle.

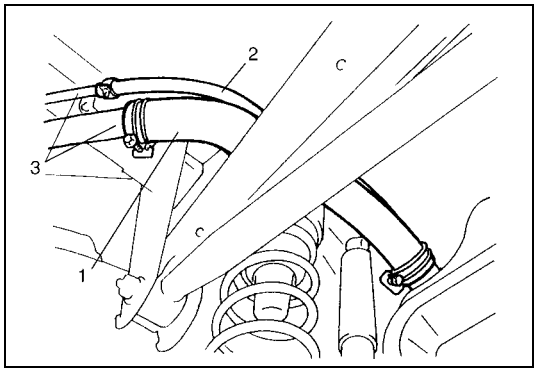

3) Disconnect fuel filler hose (1) and breather hose (2) from filler neck (3).

CAUTION:
Never disconnect fuel filler hose (1) from fuel tank inlet. If half or more of fuel is remaining to fuel tank, fuel over flows in this case and come out.

4) Due to absence of fuel tank drain plug, drain fuel tank by pumping fuel out through fuel tank filler.
   Use hand operated pump device to drain fuel tank.

CAUTION:
- **Do not force pump hose into fuel tank, or pump hose may damage fuel tank inlet valve.**
- **Never drain or store fuel in an open container due to possibility of fire or explosion.**

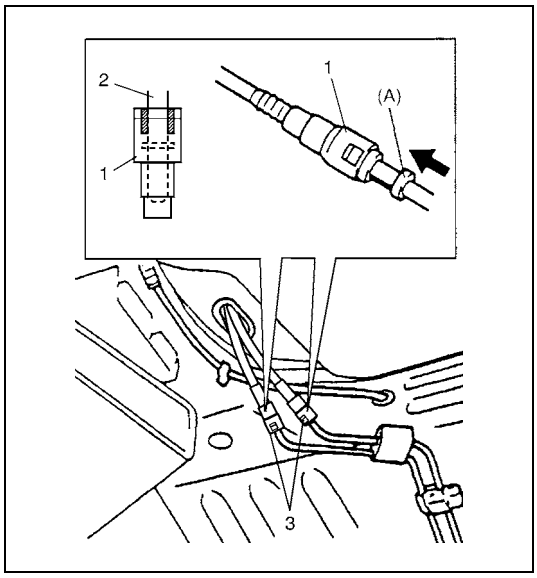

5) Disconnect fuel pipe joints from pipes.
   For quick joint (1), disconnect it as follows:
   a) Remove mud, dust and/or foreign material between pipe (2) and joint by blowing compressed air.
   b) Unlock joint (1) lock by inserting special tool between pipe (2) and joint (1).

Special tool
(A): 09919-47020

   c) Disconnect joint from pipe.

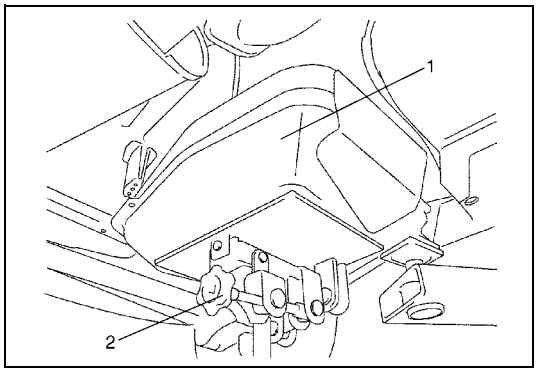

6) Support fuel tank (1) with jack (2) and remove its mounting bolts.

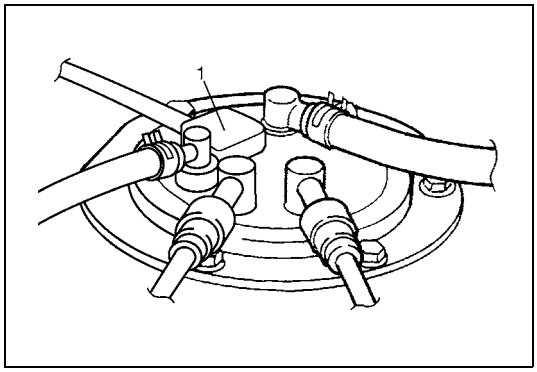

7) Lower fuel tank a little as to disconnect wire harness at connector (1), then remove fuel tank.

Installation

CAUTION:
- **When connecting joint, clean outside surfaces of pipe where joint is to be inserted, push joint into pipe till joint lock clicks and check to ensure that pipes are connected securely, or fuel leak may occur.**
- **Never let the fuel hoses touch the ABS sensor harness (if equipped).**

1) If parts have been removed from fuel tank, install them before installing fuel tank to vehicle.

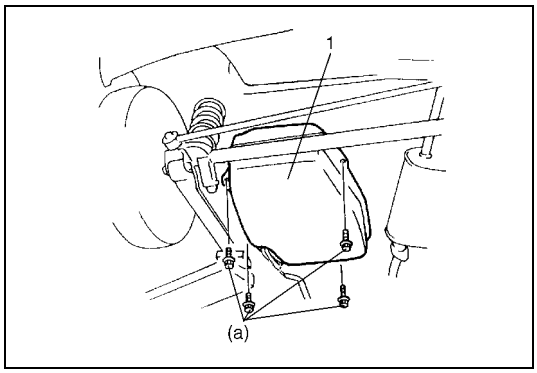

2) Raise fuel tank (1) with jack and connect connector of fuel pump and gauge and clamp wire harness.
3) Install fuel tank (1) to vehicle.

Tightening torque
Fuel tank bolt (a): 23 N·m (2.3 kg-m, 17.0 lb-ft)

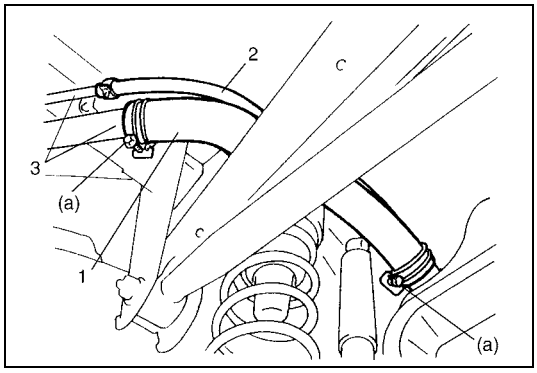

4) Connect fuel filler hose (1) and breather hose (2) to filler neck (3) as shown in figure and clamp them securely.

Tightening torque
Fuel filler hose clamp bolt
(a): 1.5 N·m (0.15 kg-m, 1.0 lb-ft)

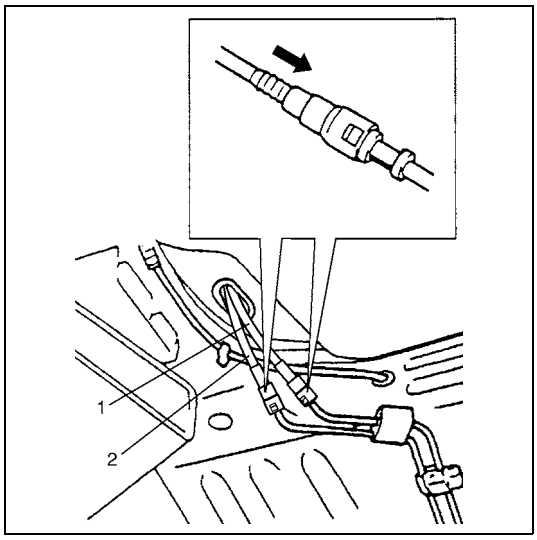

5) Connect fuel return hose (1) and fuel feed hose (2) to each pipe as shown in figure and clamp them securely.
6) Connect negative cable at battery.
   With engine OFF, turn ignition switch to ON position and check for fuel leaks.

Fuel Tank Inspection

After removing fuel tank, check hoses and pipes connected to fuel tank for leaks, loose connections, deterioration or damage. Also check fuel pump assembly gaskets for leaks, visually inspect fuel tank for leaks and damage.
Replace any damaged or malconditioned parts.

Fuel Tank Purging Procedure

WARNING:

This purging procedure will not remove all fuel vapor. Do not attempt any repair on tank using heat of flame as an explosion resulting in personal injury could occur.

CAUTION:

Never remain water in fuel tank after washing, or fuel tank inside will get corrosion.

The following procedure are used for purging fuel tank.

1) After removing fuel tank, remove all hoses, pipes and fuel pump assembly from fuel tank.
2) Drain all remaining fuel from tank.
3) Place fuel tank to flushing area.
4) Fill tank with warm water or tap water, and agitate vigorously and drain. Repeat this washing until inside of tank is clean. Replace tank if its inside is rusty.
5) Completely flush out remaining water after washing.

Fuel Pump Assembly Removal and Installation

WARNING:

Before starting the following procedure, be sure to observe "Precautions" in this section.

CAUTION:

Do not disassemble fuel pump assembly. Disassembly will spoil its original performance.

Removal

1) Remove fuel tank from vehicle referring to "Fuel Tank Removal and Installation" in this section.

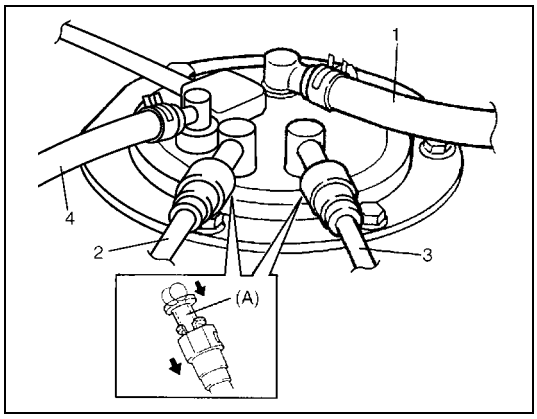

2) Disconnect fuel breather hose (1), fuel return pipe (2), fuel feed pipe (3) and fuel vapor hose (4) from fuel pump assembly.
   When disconnecting joints of fuel feed line from each pipe of fuel pump, unlock joint by inserting special tool between pipe and joint lock first.

Special tool
(A): 09919-47020

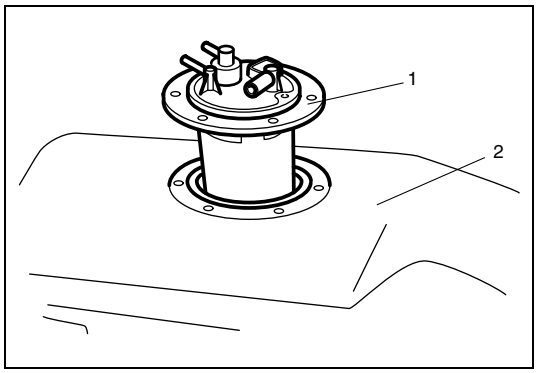

3) Remove fuel pump assembly (1) from fuel tank (2).

Installation

CAUTION:
When connecting joint, clean outside surface of pipe where joint is to be inserted, push joint into pipe till joint lock clicks and check to ensure that pipes are connected securely, or fuel leak may occur.

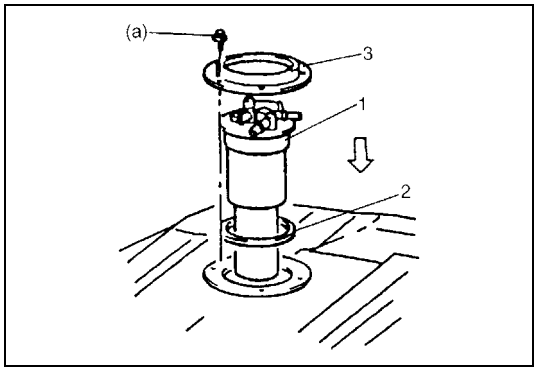

1) Clean mating surfaces of fuel pump assembly (1) and fuel tank.
2) Install new gasket (2) and plate (3) to fuel pump assembly (1) then install fuel pump assembly to fuel tank.

Tightening torque
Fuel pump bolt (a): 10.5 N·m (1.05 kg-m, 7.5 lb-ft)

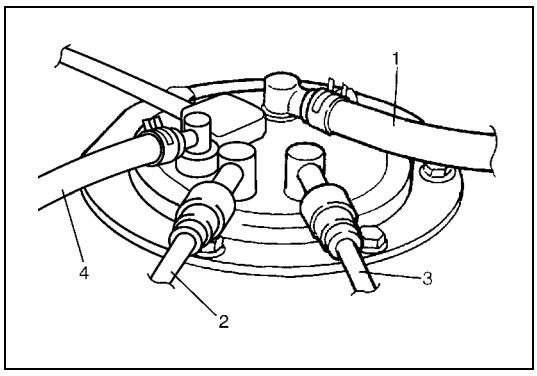

3) Connect fuel breather hose (1), fuel return pipe (2) and fuel feed pipe (3) and fuel vapor hose (4) to fuel pump assembly.
4) Install fuel tank to vehicle referring to “Fuel Tank Removal and Installation” in this section.

Fuel Pump Inspection

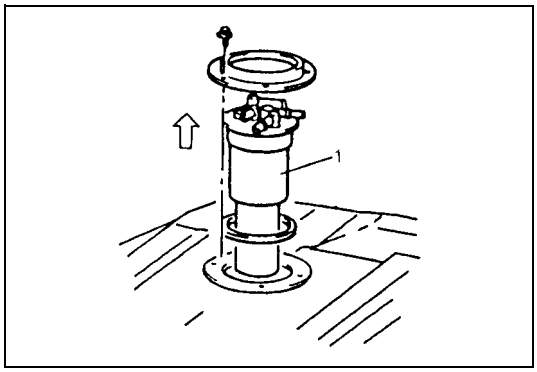

- Check fuel pump assembly for damage.
- Check fuel suction filter (1) for evidence of dirt and contamination.
  If present, replace or clean and check for presence of dirt in fuel tank.
- For inspection of fuel level gauge, refer to “Fuel Level Sensor (Gauge Unit) Inspection” in Section 8C.

Fuel Filter Element Removal and Installation

Removal

1) Disconnect negative cable at battery.
2) Place container under bleed screw (1), and drain fuel loosening bleed screw.

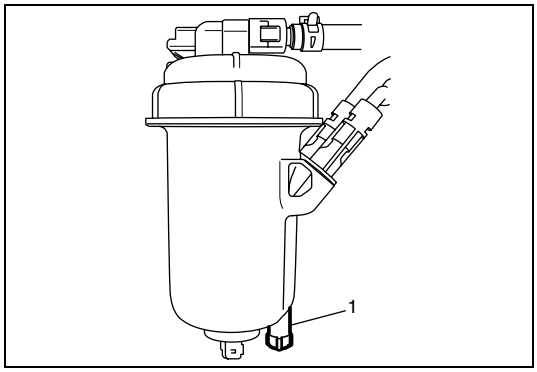

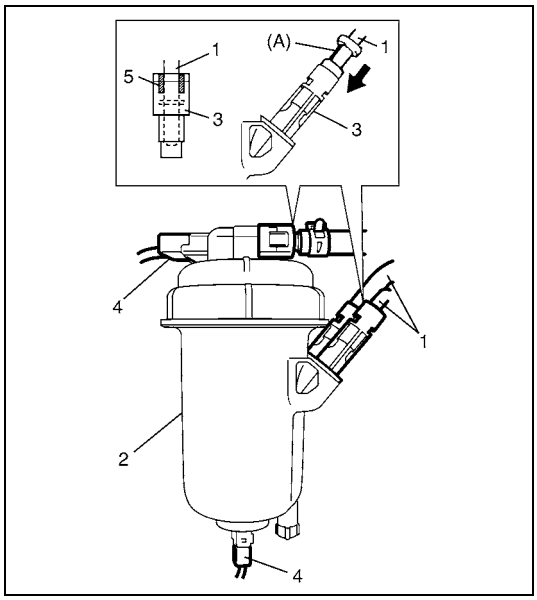

3) Disconnect fuel filter joint (1) from fuel filter (2).
   For quick joint (3), disconnect it as follows:
   a) Remove mud, dust and/or foreign material from clearance (5) between fuel filter joint (1) and quick joint by blowing compressed air.
   b) Unlock quick joint lock by inserting special tool between fuel filter joint and quick joint.

   Special tool
   (A): 09919-47020

   c) Disconnect fuel filter joint (1) from fuel filter.
4) Disconnect couplers (4) from fuel filter.

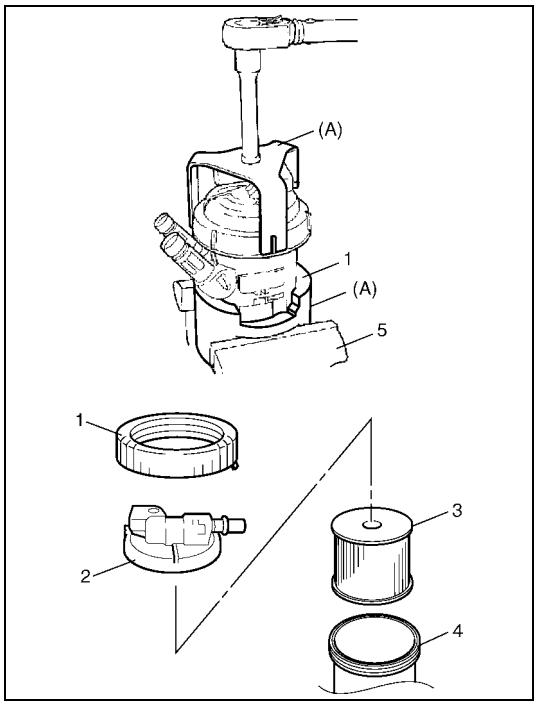

5) Turning fuel filter fastener (1) counterclockwise, remove fuel filter fastener (1) from fuel filter case (4) using special tool and vise (5).

Special tool
(A): 09919-48610

6) Remove fuel filter cap (2) and fuel filter element (3).

Installation

Reverse removal procedure for installation noting the following.

- Be sure to replace fuel filter element and O-ring as new one.
- Clean fuel filter case as follows.

a) Place container under bleed screw, and drain fuel loosing bleed screw.
b) Tighten bleed screw.
c) Remove fuel filter case.
d) Pour diesel substitute (kerdane, diltine or paraffin) into fuel filter case.
e) Clean fuel filter case with brush.
f) Dry and wipe out fuel filter case.

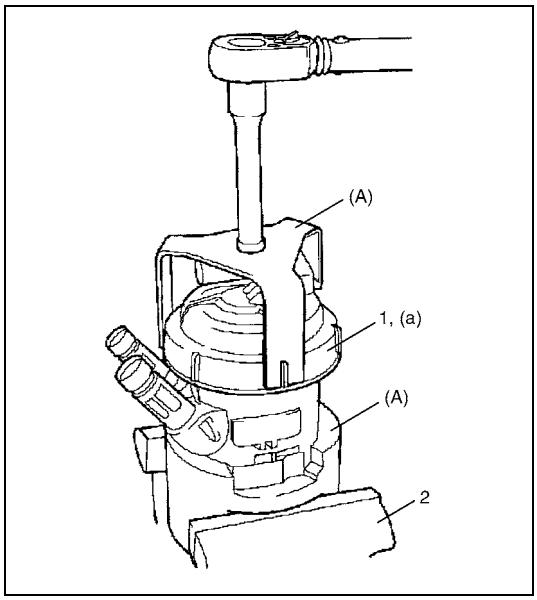

- Tighten fuel filter fastener (1) to specified torque using special tool and vise (2).

Special tool
(A): 09919-48610

Tightening torque
Fuel filter fastener
(a): 30 N·m (3.0 kg-m, 22.0 lb-ft)

- Bleed air in system referring to “Air Bleeding of Fuel System” in this section.
- Start engine and check that there are no fuel leakage.

Fuel Filter Assembly Removal and Installation

Removal

1) Disconnect fuel pipes in the same manner as step 1) through 4) of “Removal” under “Fuel Filter Element Removal and Installation” in this section.
2) Remove fuel filter assembly.

Installation

Reverse removal procedure for installation noting the following.

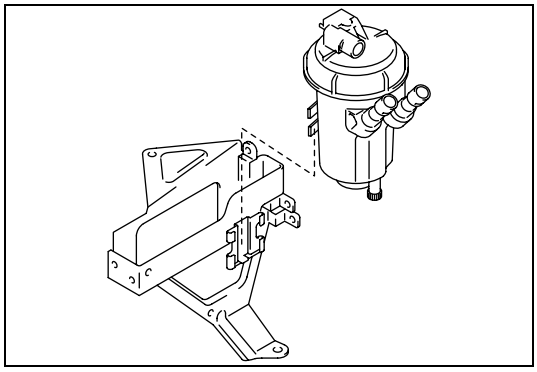

- Bleed air in system referring to “Air Bleeding of Fuel System” in this section.
- Start engine and check that there are no fuel leakage.

Special Tool

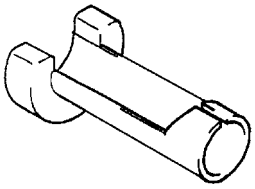	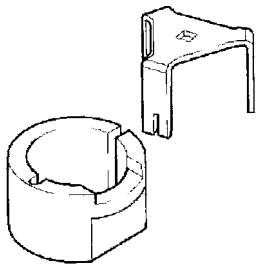
09919-47020 Quick joint remover	09919-48610 (EN-46784) Fuel filter locking tool

Tightening Torque Specification

Fastening part	Tightening torque		
	N•m	kg-m	lb-ft
Fuel pump bolt	10.5	1.05	7.5
Fuel tank bolt	23	2.3	17.0
Fuel filler hose clamp bolt	1.5	0.15	1.1
Separator screw	1.8	0.18	1.3

Fastening part	Tightening torque		
	N•m	kg-m	lb-ft
Fuel filter fastener	30	3.0	21.5

SECTION 6E3

ENGINE AND EMISSION CONTROL SYSTEM (Z13DT ENGINE)

WARNING:

For vehicles equipped with a Supplemental Restraint (Air Bag) System:

- **Service on and around the air bag system components or wiring must be performed only by an authorized SUZUKI dealer. Refer to "System Components and Wiring Location View and Connectors" under "General Description" in Section 10B in order to confirm whether you are performing service on or near the air bag system components or wiring. Please observe all WARNINGS and "Service Precautions" under "On-Vehicle Service" in Section 10B before performing service on or around the air bag system components or wiring. Failure to follow WARNINGS could result in unintentional activation of the system or could render the system inoperative. Either of these two conditions may result in severe injury.**
- **Technical service work must be started at least 90 seconds after the ignition switch is turned to the "LOCK" position and the negative cable is disconnected from the battery. Otherwise, the system may be activated by reserve energy in the Sensing and Diagnostic Module (SDM).**

CONTENTS

General Description 6E3-3
System Diagram 6E3-3
Electronic Control System 6E3-4
System location diagram 6E3-4
System wiring diagram for RM413D 6E3-5
System wiring diagram for RB413D 6E3-8
Air Intake System 6E3-11
Fuel Delivery System 6E3-12
On-Vehicle Service 6E3-13
Idle Speed Inspection 6E3-13
Air Intake System 6E3-13
Vacuum pump removal and installation .. 6E3-13
Fuel Delivery System 6E3-15
Precautions 6E3-15
Fuel delivery system components 6E3-18
Fuel leakage check 6E3-19
Fuel pump on-vehicle inspection 6E3-19
Fuel pump removal and installation 6E3-19
Fuel pump inspection 6E3-19
Fuel injector on-vehicle inspection 6E3-20
Fuel injector removal and installation ... 6E3-20
Common rail (High pressure fuel injection rail) removal and installation 6E3-23
Injection pump removal and installation .. 6E3-25
Electronic Control System 6E3-27
Engine control module (ECM) removal and installation 6E3-27
ECM registration 6E3-29
Registration data check 6E3-30
Mass air flow (MAF) and intake air temperature (IAT) sensor removal and installation ... 6E3-31
Glow plug removal and installation 6E3-32
Pedal position sensor removal and installation 6E3-33
Fuel heater and temperature sensor removal and installation 6E3-34
Fuel temperature sensor inspection 6E3-34
Fuel pressure sensor removal and installation 6E3-34
Fuel pressure regulator removal and installation 6E3-35
Fuel pressure regulator inspection 6E3-36
Engine coolant temperature sensor (ECT sensor) removal and installation . 6E3-36
Engine coolant temperature sensor (ECT sensor) inspection 6E3-37
Camshaft position sensor (CMP sensor) removal and installation 6E3-38
Crankshaft position (CKP) sensor (engine speed sensor) removal and installation 6E3-38
Crankshaft position (CKP) sensor (engine speed sensor) inspection 6E3-39
Engine oil level switch removal and installation (If equipped) 6E3-40
Engine oil level switch inspection (If equipped) 6E3-40
Boost pressure sensor removal and installation 6E3-41

Radiator fan control system inspection 6E3-41
Fuel pump relay and radiator fan relay 1, 2, 3 inspection 6E3-42
Main relay and fuel heating relay inspection 6E3-42
Glow controller removal and installation .. 6E3-43
EGR System 6E3-44
EGR valve assembly component 6E3-44
EGR valve assembly removal and installation 6E3-45
Crankcase Ventilation System 6E3-47
Crankcase ventilation system component 6E3-47
Oil separator and crankcase ventilation cover removal and installation 6E3-48
Required Service Material 6E3-50
Tightening Torque Specification 6E3-50
Special Tool 6E3-51

General Description

System Diagram

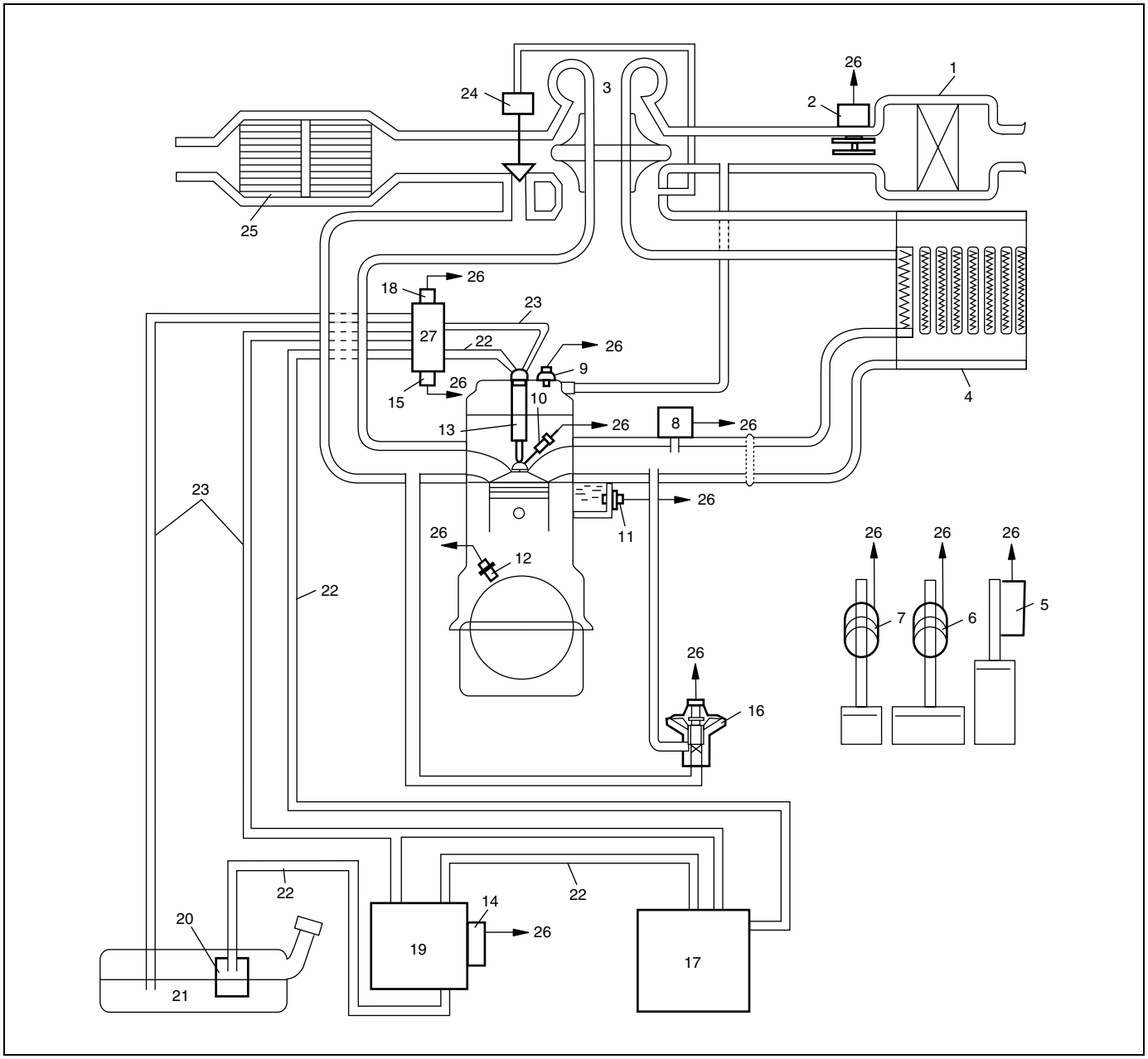

1. Air Cleaner	10. Glow plug	19. Fuel filter
2. MAF and IAT sensor	11. ECT sensor	20. Fuel pump
3. Turbocharger	12. CKP sensor (Engine speed sensor)	21. Fuel tank
4. Intercooler	13. Fuel injector	22. Fuel feed line
5. PPS (Pedal position sensor)	14. Fuel heater and temperature sensor	23. Fuel return line
6. Brake switch	15. Fuel pressure sensor	24. Waste gate actuator
7. Clutch switch	16. EGR valve	25. Catalytic converter
8. Boost pressure sensor	17. Injection pump	26. To ECM
9. CMP sensor	18. Fuel pressure regulator	27. Common rail (High pressure fuel injection rail)

Electronic Control System

System location diagram

NOTE:

For RB413D, check for installation position of each relay referring to "Wiring Diagram Manual" described in "Foreword" of this manual.

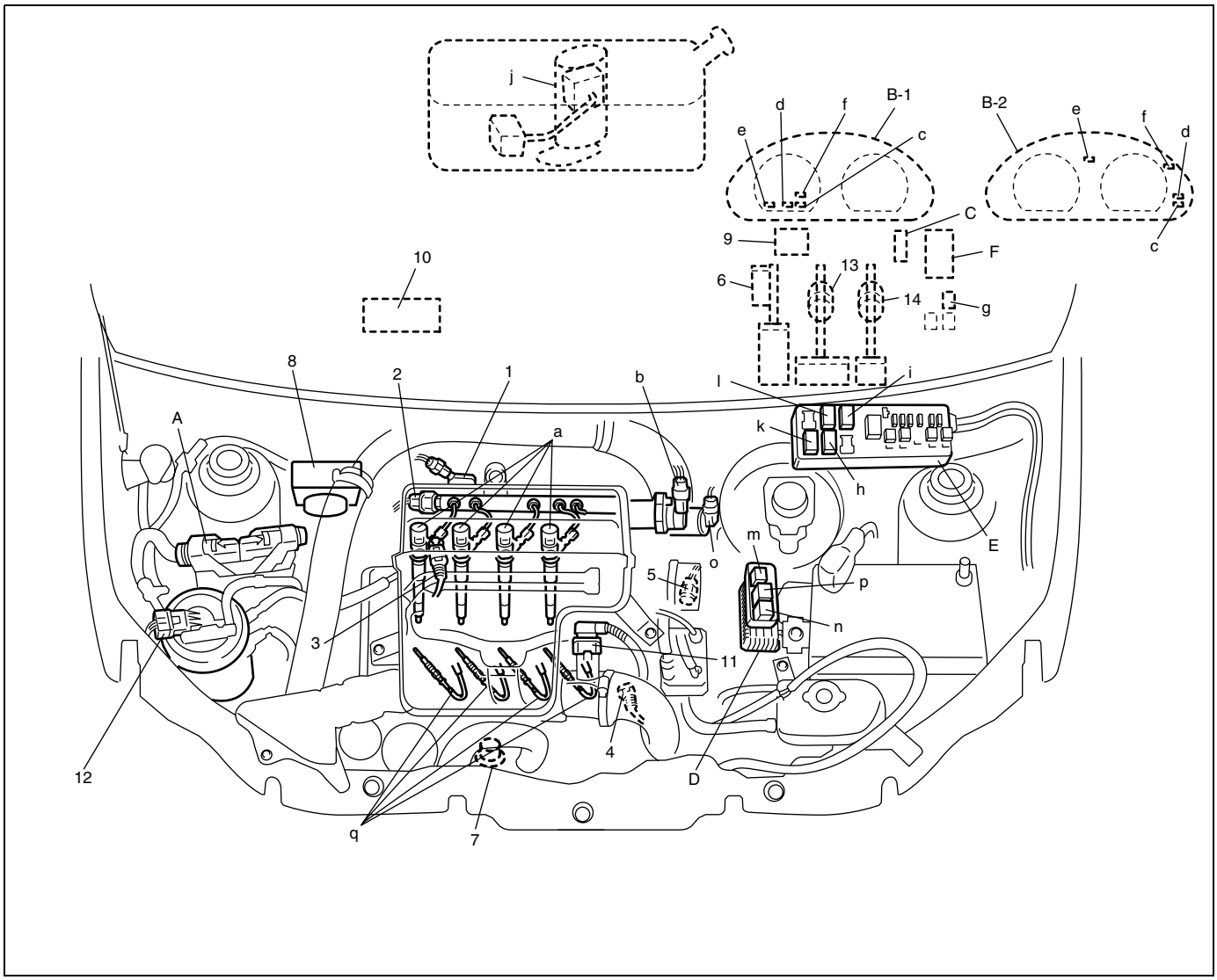

INFORMATION SENSORS	CONTROLLED DEVICES	OTHERS
1. Boost pressure sensor	a: Fuel injector	A: ECM
2. Fuel pressure sensor	b: Fuel pressure regulator	B-1: Combination meter for RM413D
3. CMP sensor	c: Malfunction indicator lamp	B-2: Combination meter for RB413D
4. CKP sensor	d: Service vehicle soon lamp	C: Data link connector
5. ECT sensor	e: Glow indicator lamp	D: Glow controller
6. Pedal position sensor	f: Oil level indicator lamp	E: Main fuse box
7. Oil level switch	g: A/C relay (if equipped) for RM413D	F: Circuit fuse box
8. ABS control module	h: A/C compressor relay (if equipped)	
9. Immobilizer control module	i: Fuel pump relay	
10. A/C control module	j: Fuel pump	
11. MAF and IAT sensor	k: Radiator fan relay 1	
12. Fuel heater and temperature sensor	l: Radiator fan relay 2	
13. Brake switch	m: Radiator fan relay 3	
14. Clutch switch	n: Main relay	
	o: EGR valve	
	p: Fuel heating relay	
	q: Glow plug	

System wiring diagram for RM413D

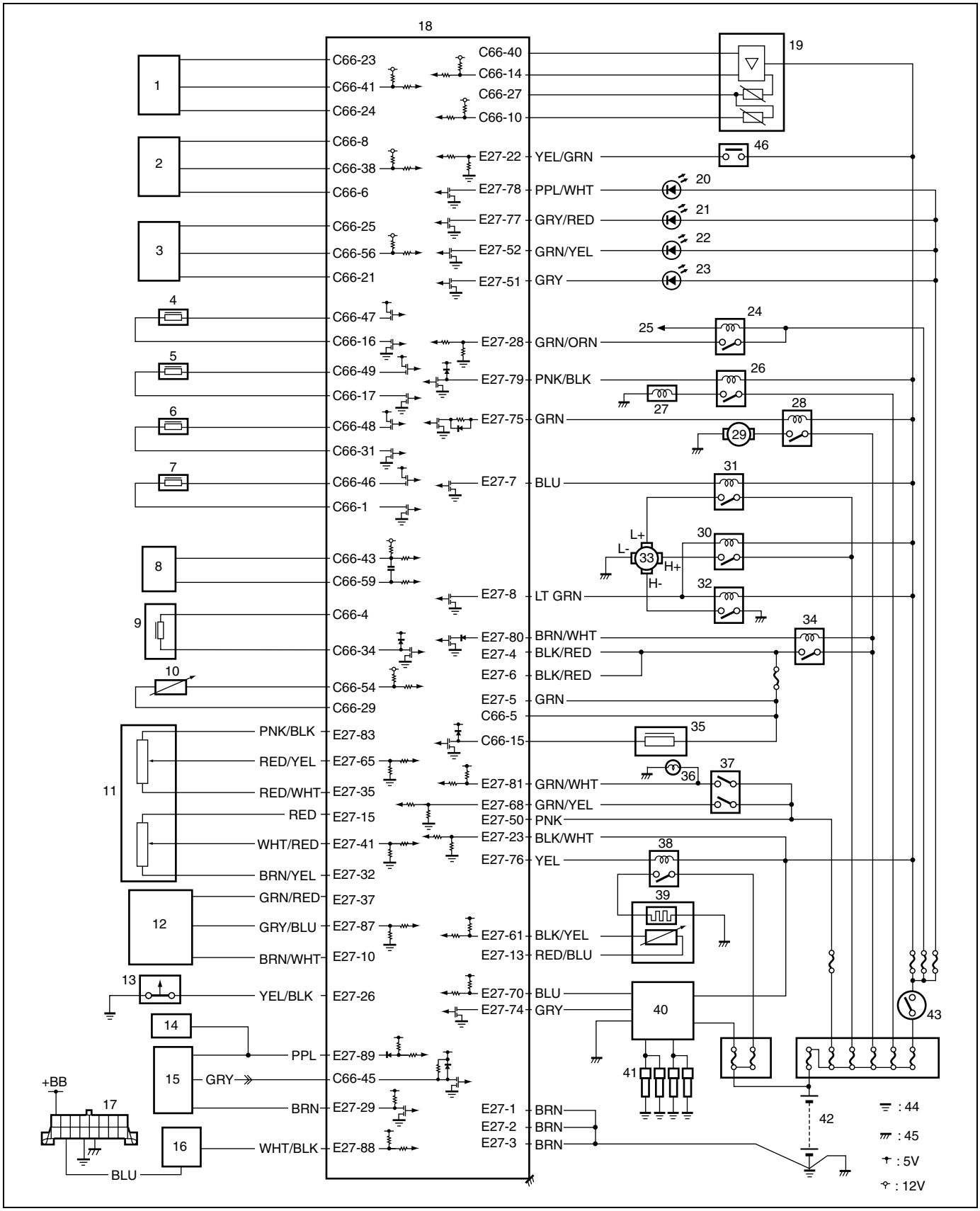

1. Boost pressure sensor	17. Data link connector	33. Radiator cooling fan motor
2. Fuel pressure sensor	18. ECM	34. Main relay
3. CMP sensor	19. MAF and IAT sensor	35. EGR valve
4. Fuel injector No.1	20. Malfunction indicator lamp	36. Brake lamp
5. Fuel injector No.2	21. Service vehicle soon lamp	37. Brake switch
6. Fuel injector No.3	22. Glow indicator lamp	38. Fuel heating relay
7. Fuel injector No.4	23. Oil level indicator lamp	39. Fuel heater and temperature sensor
8. CKP sensor	24. A/C relay (if equipped)	40. Glow controller
9. Fuel pressure regulator	25. To A/C switch (if equipped)	41. Glow plug
10. ECT sensor	26. Compressor relay (if equipped)	42. Battery
11. Pedal position sensor	27. A/C compressor (if equipped)	43. Ignition switch
12. A/C pressure sensor (if equipped)	28. Fuel pump relay	44. Engine ground
13. Oil level switch	29. Fuel pump	45. Vehicle body ground
14. ABS control module	30. Radiator fan relay 1	46. Clutch switch
15. Combination meter	31. Radiator fan relay 2	
16. Immobilizer control module	32. Radiator fan relay 3	

ECM Connector (Terminal Arrangement Viewed from Harness Side)

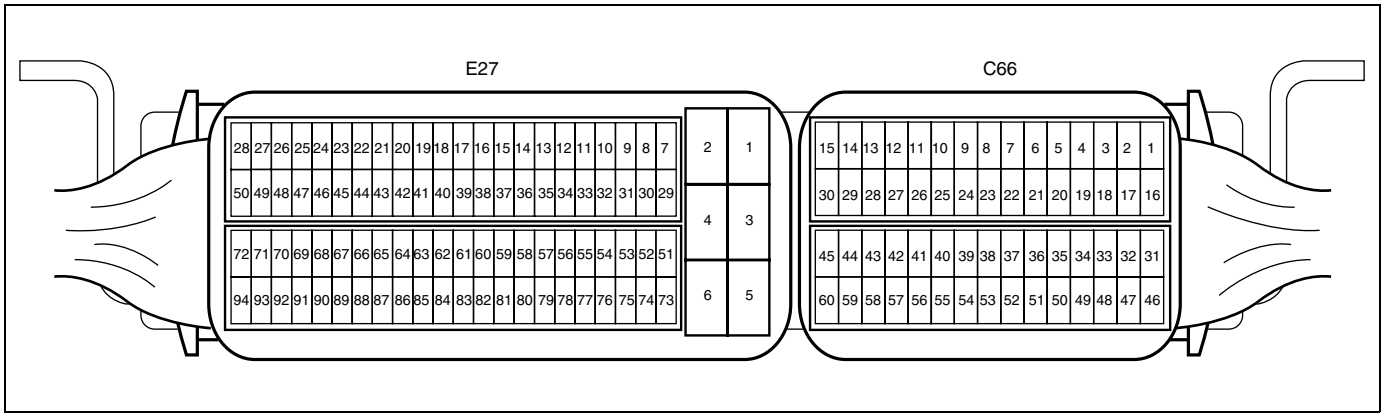

TERMINAL		CIRCUIT
C66	1	Fuel injector No.4 output (low side)
	2	–
	3	–
	4	Output of 12 V power source for fuel pressure regulator
	5	Main power supply
	6	Ground for fuel pressure sensor
	7	–
	8	Output of 5 V power source for fuel pressure sensor
	9	–
	10	Intake air temperature sensor signal
	11	–
	12	–
	13	–
	14	MAF sensor signal
	15	EGR valve output
	16	Fuel injector No.1 output (low side)
	17	Fuel injector No.2 output (low side)
	18	–
	19	–
	20	–
	21	Ground for CMP sensor
	22	–
	23	Output of 5 V power source for boost pressure sensor
	24	Ground for boost pressure sensor
	25	Output of 5 V power source for CMP sensor
	26	–
	27	Ground for MAF and IAT sensor
	28	–
	29	Ground for ECT sensor
	30	–
	31	Fuel injector No.3 output (low side)
	32	–
	33	–
	34	Fuel pressure regulator signal
	35	–
	36	–
	37	–
	38	Fuel pressure sensor signal
	39	–
	40	Output of 5 V power source for MAF and IAT sensor
	41	Boost pressure sensor signal
	42	–
	43	CKP sensor signal (+)
	44	–
	45	Engine coolant temperature signal for combination meter
	46	Fuel injector No.4 output (high side)
	47	Fuel injector No.1 output (high side)
	48	Fuel injector No.3 output (high side)
	49	Fuel injector No.2 output (high side)
	50	–
	51	–

TERMINAL		CIRCUIT
C66	52	–
	53	–
	54	ECT sensor signal
	55	–
	56	CMP sensor signal
	57	–
	58	–
	59	CKP sensor signal (–)
	60	–
E27	1	Ground for ECM
	2	Ground for ECM
	3	Ground for ECM
	4	Main power supply
	5	Main power supply
	6	Main power supply
	7	Radiator fan relay 2 output
	8	Radiator fan relay 1 output
	9	–
	10	Ground for A/C pressure sensor
	11	–
	12	–
	13	Ground for fuel temperature sensor
	14	–
	15	Output of 5 V power source for pedal position sensor (PPS2)
	16	–
	17	–
	18	–
	19	–
	20	–
	21	–
	22	Clutch switch signal
	23	Ignition switch signal
	24	–
	25	–
	26	Oil level switch signal
	27	–
	28	A/C relay signal
	29	Engine revolution signal for combination meter
	30	–
	31	–
	32	Ground for pedal position sensor (PPS2)
	33	–
	34	–
	35	Ground for pedal position sensor (PPS1)
	36	–
	37	Output of 5 V power source for A/C pressure sensor
	38	–
	39	–
	40	–
	41	Pedal position sensor (PPS2) signal
	42	–
	43	–
	44	–

TERMINAL		CIRCUIT
E27	45	–
	46	–
	47	–
	48	–
	49	–
	50	Power source for ECM
	51	Oil level indicator lamp
	52	Glow indicator lamp
	53	–
	54	–
	55	–
	56	–
	57	–
	58	–
	59	–
	60	–
	61	Fuel temperature sensor signal
	62	–
	63	–
	64	–
	65	Pedal position sensor (PPS1) signal
	66	–
	67	–
	68	Brake switch signal
	69	–
	70	Glow controller input signal
	71	–
	72	–
	73	–
	74	Glow controller output signal
	75	Fuel pump relay output
	76	Fuel heating relay output
	77	Service vehicle soon lamp
	78	Malfunction indicator lamp
	79	Compressor relay output
	80	Main power supply relay output
	81	Brake switch signal for brake lamp
	82	–
	83	Output of 5 V power source for pedal position sensor (PPS1)
	84	–
	85	–
	86	–
	87	A/C pressure sensor signal
	88	Serial communication line of data link connector 12 V
	89	ABS control module signal (vehicle speed sensor signal)
	90	–
	91	–
	92	–
	93	–
	94	–

System wiring diagram for RB413D

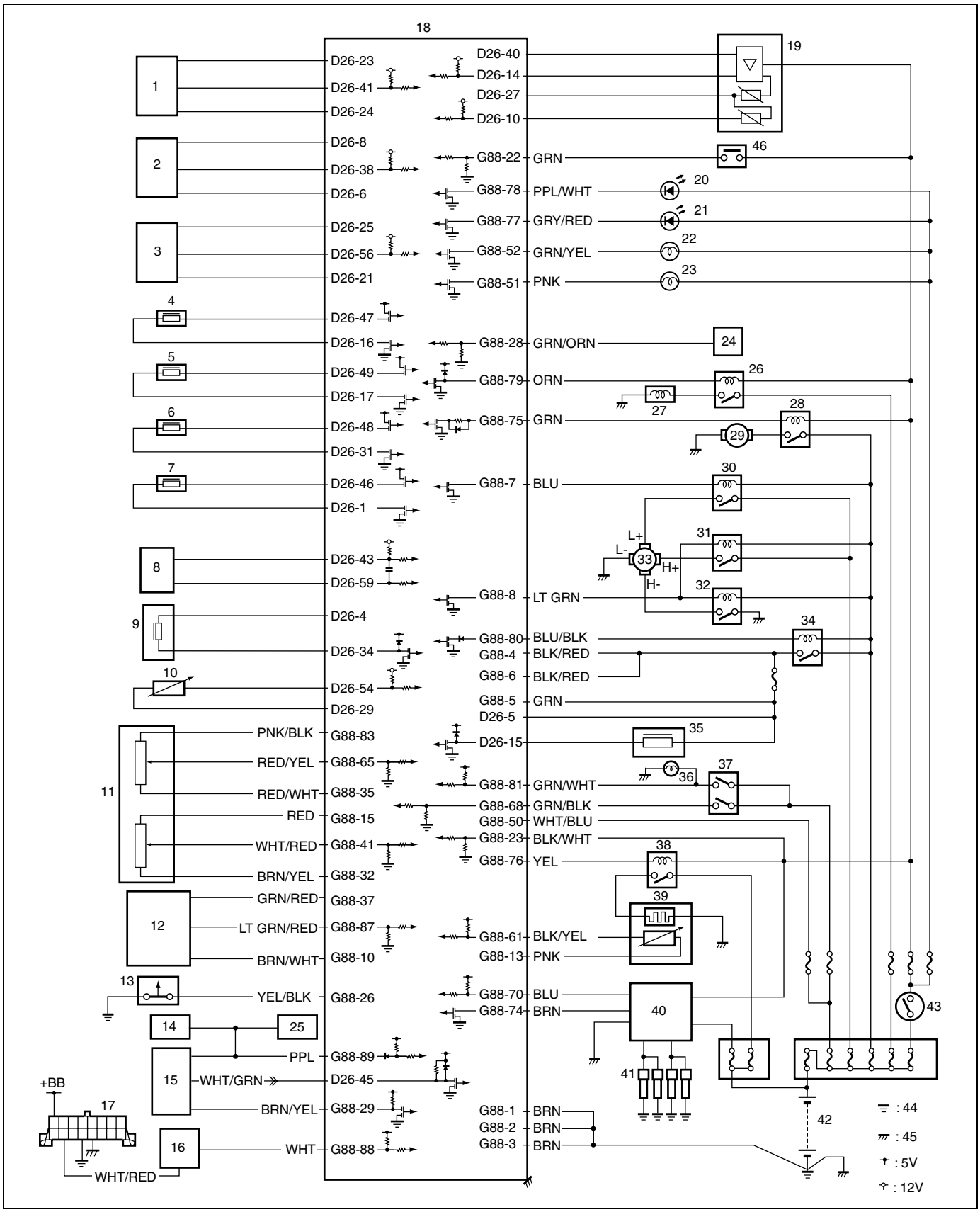

1. Boost pressure sensor	17. Data link connector	33. Radiator cooling fan motor
2. Fuel pressure sensor	18. ECM	34. Main relay
3. CMP sensor	19. MAF and IAT sensor	35. EGR valve
4. Fuel injector No.1	20. Malfunction indicator lamp	36. Brake lamp
5. Fuel injector No.2	21. Service vehicle soon lamp	37. Brake switch
6. Fuel injector No.3	22. Glow indicator lamp	38. Fuel heating relay
7. Fuel injector No.4	23. Oil level indicator lamp	39. Fuel heater and temperature sensor
8. CKP sensor	24. A/C switch (if equipped)	40. Glow controller
9. Fuel pressure regulator	25. EPS control module	41. Glow plug
10. ECT sensor	26. Compressor relay (if equipped)	42. Battery
11. Pedal position sensor	27. A/C compressor (if equipped)	43. Ignition switch
12. A/C pressure sensor (if equipped)	28. Fuel pump relay	44. Engine ground
13. Oil level switch	29. Fuel pump	45. Vehicle body ground
14. ABS control module	30. Radiator fan relay 1	46. Clutch switch
15. Combination meter	31. Radiator fan relay 2	
16. Immobilizer control module	32. Radiator fan relay 3	

ECM Connector (Terminal Arrangement Viewed from Harness Side)

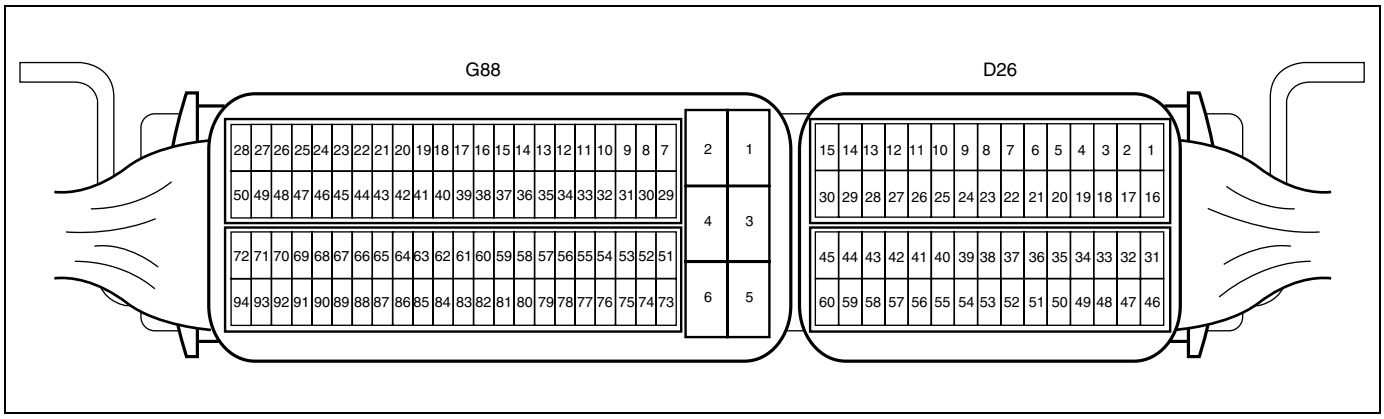

TERMINAL		CIRCUIT
D26	1	Fuel injector No.4 output (low side)
	2	–
	3	–
	4	Output of 12 V power source for fuel pressure regulator
	5	Main power supply
	6	Ground for fuel pressure sensor
	7	–
	8	Output of 5 V power source for fuel pressure sensor
	9	–
	10	Intake air temperature sensor signal
	11	–
	12	–
	13	–
	14	MAF sensor signal
	15	EGR valve output
	16	Fuel injector No.1 output (low side)
	17	Fuel injector No.2 output (low side)
	18	–
	19	–
	20	–
	21	Ground for CMP sensor
	22	–
	23	Output of 5 V power source for boost pressure sensor
	24	Ground for boost pressure sensor
	25	Output of 5 V power source for CMP sensor
	26	–
	27	Ground for MAF and IAT sensor
	28	–
	29	Ground for ECT sensor
	30	–
	31	Fuel injector No.3 output (low side)
	32	–
	33	–
	34	Fuel pressure regulator signal
	35	–
	36	–
	37	–
	38	Fuel pressure sensor signal
	39	–
	40	Output of 5 V power source for MAF and IAT sensor
	41	Boost pressure sensor signal
	42	–
	43	CKP sensor signal (+)
	44	–
	45	Engine coolant temperature signal for combination meter
	46	Fuel injector No.4 output (high side)
	47	Fuel injector No.1 output (high side)
	48	Fuel injector No.3 output (high side)
	49	Fuel injector No.2 output (high side)
	50	–
	51	–

TERMINAL		CIRCUIT
D26	52	–
	53	–
	54	ECT sensor signal
	55	–
	56	CMP sensor signal
	57	–
	58	–
	59	CKP sensor signal (–)
	60	–
G88	1	Ground for ECM
	2	Ground for ECM
	3	Ground for ECM
	4	Main power supply
	5	Main power supply
	6	Main power supply
	7	Radiator fan relay 1 output
	8	Radiator fan relay 2 output
	9	–
	10	Ground for A/C pressure sensor
	11	–
	12	–
	13	Ground for fuel temperature sensor
	14	–
	15	Output of 5 V power source for pedal position sensor (PPS2)
	16	–
	17	–
	18	–
	19	–
	20	–
	21	–
	22	Clutch switch signal
	23	Ignition switch signal
	24	–
	25	–
	26	Oil level switch signal
	27	–
	28	A/C relay signal
	29	Engine revolution signal for combination meter
	30	–
	31	–
	32	Ground for pedal position sensor (PPS2)
	33	–
	34	–
	35	Ground for pedal position sensor (PPS1)
	36	–
	37	Output of 5 V power source for A/C pressure sensor
	38	–
	39	–
	40	–
	41	Pedal position sensor (PPS2) signal
	42	–
	43	–
	44	–

TERMINAL		CIRCUIT
G88	45	–
	46	–
	47	–
	48	–
	49	–
	50	Power source for ECM
	51	Oil level indicator lamp
	52	Glow indicator lamp
	53	–
	54	–
	55	–
	56	–
	57	–
	58	–
	59	–
	60	–
	61	Fuel temperature sensor signal
	62	–
	63	–
	64	–
	65	Pedal position sensor (PPS1) signal
	66	–
	67	–
	68	Brake switch signal
	69	–
	70	Glow controller input signal
	71	–
	72	–
	73	–
	74	Glow controller output signal
	75	Fuel pump relay output
	76	Fuel heating relay output
	77	Service vehicle soon lamp
	78	Malfunction indicator lamp
	79	Compressor relay output
	80	Main power supply relay output
	81	Brake switch signal for brake lamp
	82	–
	83	Output of 5 V power source for pedal position sensor (PPS1)
	84	–
	85	–
	86	–
	87	A/C pressure sensor signal
	88	Serial communication line of data link connector 12 V
	89	ABS control module signal (vehicle speed sensor signal)
	90	–
	91	–
	92	–
	93	–
	94	–

Air Intake System

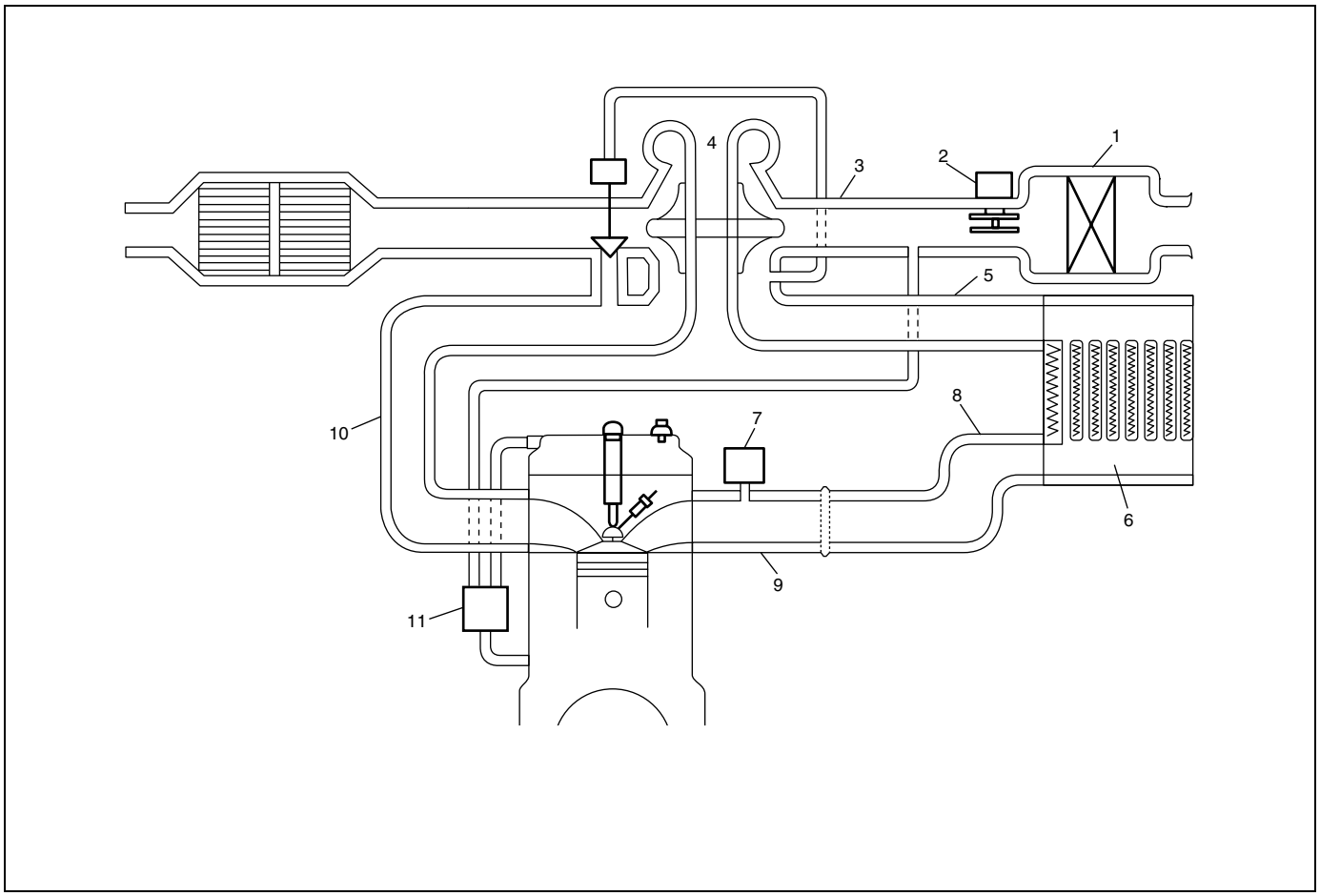

1. Air cleaner	5. Intercooler inlet hose	9. Intake manifold
2. MAF and IAT sensor	6. Intercooler	10. Exhaust manifold
3. Air cleaner outlet hose	7. Boost pressure sensor	11. Oil separator
4. Turbocharger	8. Intercooler outlet hose	

Fuel Delivery System

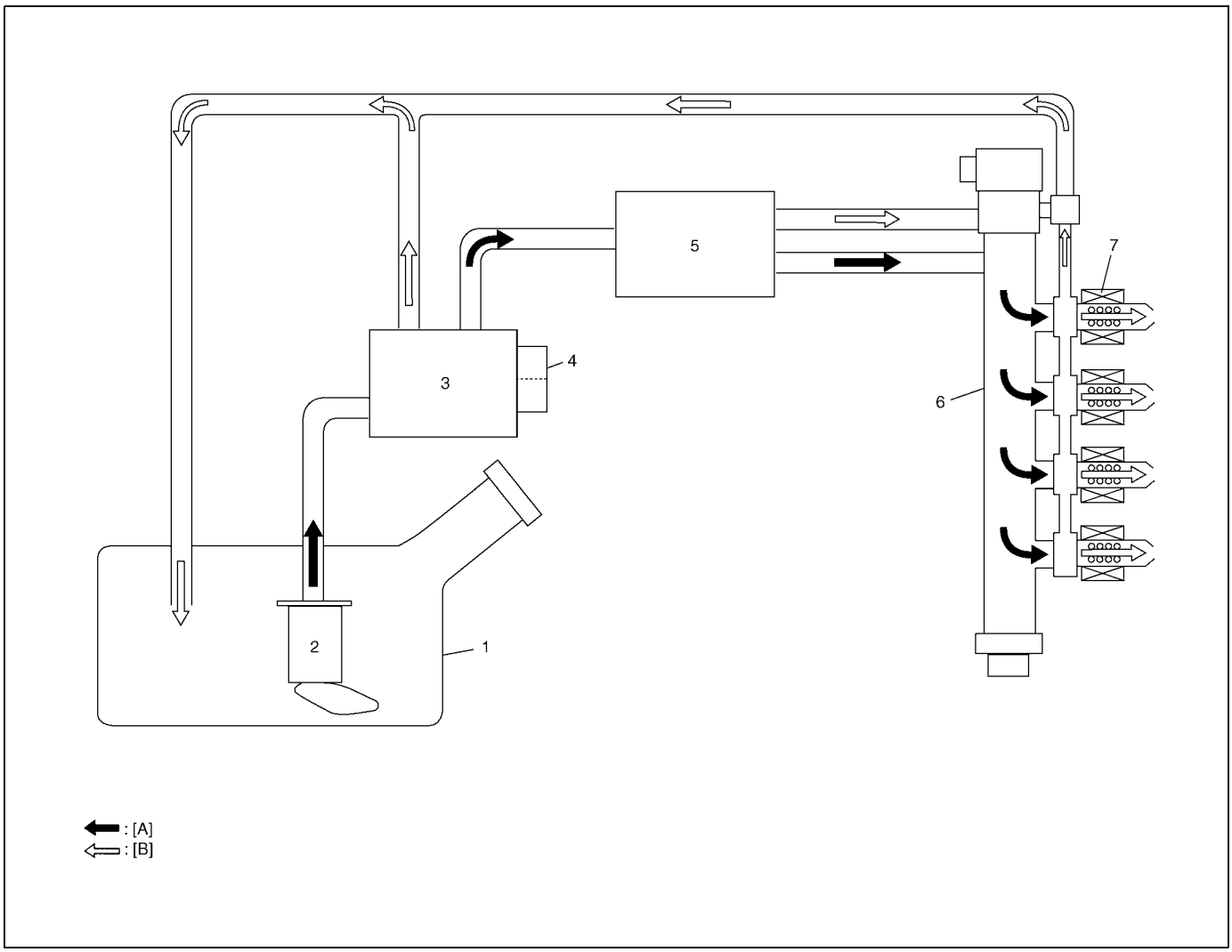

1. Fuel tank	5. Injection pump	[A]: Fuel feed line
2. Fuel pump	6. Common rail (High pressure fuel injection rail)	[B]: Fuel return line
3. Fuel filter	7. Fuel injector	
4. Fuel heater and temperature sensor		

On-Vehicle Service

Idle Speed Inspection

1) Shift transmission into Neutral.
2) Start engine and warm it up to normal operating temperature.
3) Turn all electrical loads off.
4) Using SUZUKI scan tool, verify that idle speed is within specification.

Engine speed: 720 – 880 rpm

5) If not, refer to “B-11, Complaint: Engine Idling” in Section 6-3.

Air Intake System

Vacuum pump removal and installation

Removal

CAUTION:
Never disassemble vacuum pump.
Disassembly will spoil its original function.
If faulty condition is found, replace it with new one.

1) Disconnect negative cable from battery.
2) Remove air cleaner assembly referring to “Air Cleaner Assembly Removal and Installation” in Section 6A3.

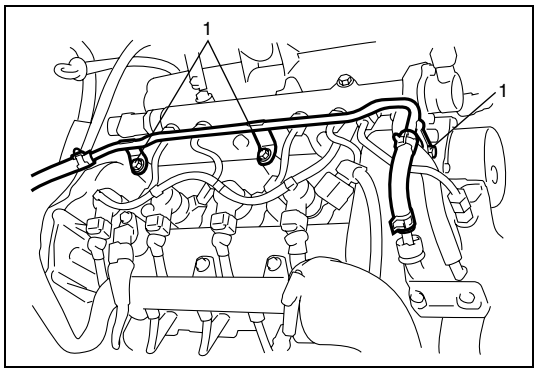

3) Remove fuel feed pipe mounting bolts (1).

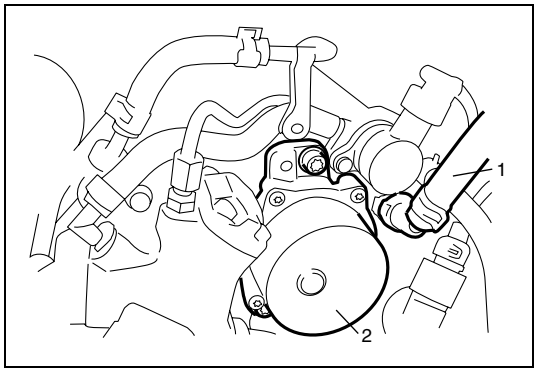

4) Disconnect brake booster hose (1) from vacuum pump.
5) Remove vacuum pump (2) from camshaft housing.

Installation

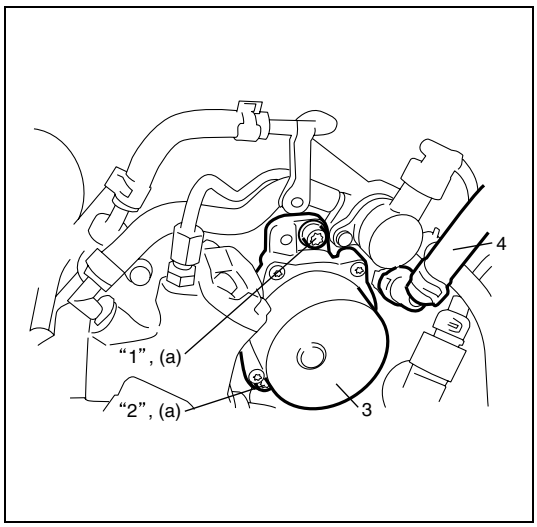

1) Install new gasket to vacuum pump.
2) Install vacuum pump (2) to camshaft housing.
   Fit the dogs of vacuum pump coupling into the slot of camshaft.
3) Tighten vacuum pump bolt gradually as follows.
   a) Tighten vacuum pump bolt to 5 N·m (0.5 kg-m, 4.0 lb-ft) according to numerical order in the figure.
   b) In the same manner as Step a), tighten them to 20 N·m (2.0 kg-m, 14.5 lb-ft).

Tightening torque
Vacuum pump bolt (a):
Tighten 5 N·m (0.5 kg-m, 4.0 lb-ft) and 20 N·m (2.0 kg-m, 14.5 lb-ft) by the specified procedure

4) Connect brake booster hose (3) to vacuum pump.

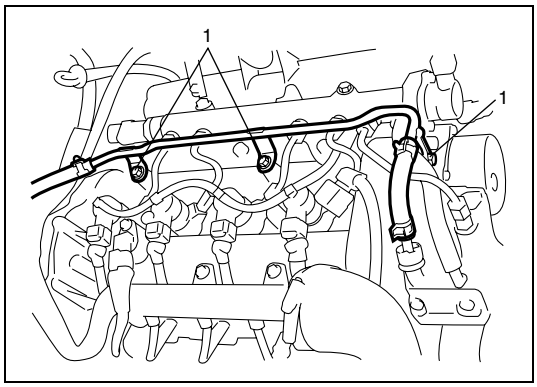

5) Tighten fuel feed pipe mounting bolts (1).

6) Install air cleaner assembly referring to "Air Cleaner Assembly Removal and Installation" in Section 6A3.
7) Connect negative cable to battery.

Fuel Delivery System

WARNING:

- **Fuel vapor is hazardous. It can very easily ignite, causing serious injury and damage. Always keep sparks and flames away from fuel. Fuel line spills and leaks are dangerous. Fuel can ignite and cause serious injuries or death and damage.**
- **Fuel can also irritate skin and eyes. To prevent this, always complete the following "Precautions".**

Precautions

- Before disconnecting a fuel hose or pipe, wait 60 seconds or more after ignition switch turned OFF to release pressure in fuel system.
- The fuel system must be checked for leaks after service work, refer to "Fuel leakage check" in this section.
- The fuel system is very sensitive to contamination. The risks caused by the introduction of contamination are:
  – damage or destruction of the high pressure injection system and the engine.
  – seizing or leaking of a component.
- When servicing on the high pressure direct injection system, must be performed under very clean conditions.
  This means that no impurities (particles a few microns in side) get into the system during dismantling or into the circuits via the fuel unions.
- The cleanliness principle must be applied from the fuel filter to the injectors.
- Contamination is caused by:
  – metal or plastic chips,
  – paint,
  – fibres: boxes, brushes, paper, clothing, cloths,
  – foreign bodies such as hair,
  – ambient air,
  – etc.
- It is not possible to clean the engine using a high pressure washer because of the risk of damaging connections.
  In addition, moisture may collect in the connectors and create electrical connection problems.
- The technician should wear clean overalls.
- Ensure that you have the plug caps (special tool) for the unions to be opened. Plug caps are to be used once only. After use, they must be thrown away (once used they are soiled and cleaning is not sufficient to make them reusable).
  Unused plug caps must be thrown away, also.

Special tool
(A): 09914-65420
(B): 09916-50010
(C): 09919-48320
(D): 09919-48310

NOTE:

Do not use instructions included in special tools (A) and (B) because they are used for the other engines. Install special tools (A) and (B) referring to the below illustration.

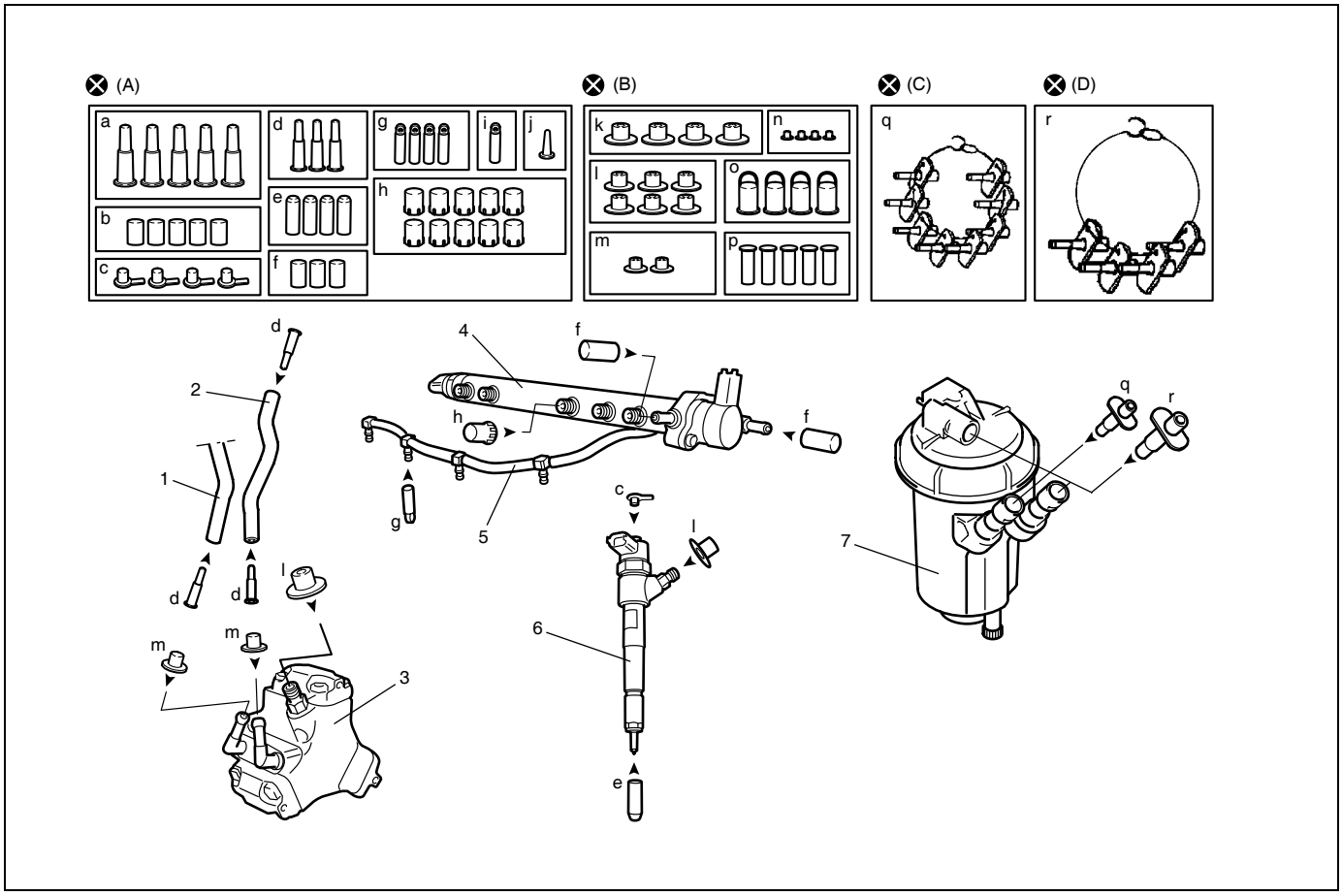

1. Fuel feed hose	4. Common rail	7. Fuel filter assembly
2. Fuel return hose	5. Return hose	⊗: Do not reuse.
3. Injection pump	6. Fuel injector	

- Ensure that you have hermetically resalable plastic bags for storing removed parts. Stored parts will therefore be less subject to the risk of impurities. The bags must be used only once, and after use they must be thrown away.

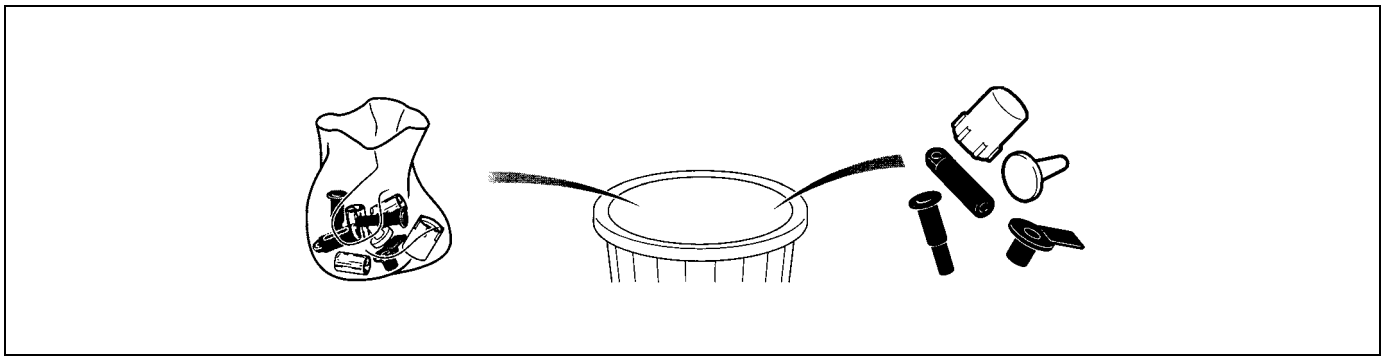

- Make sure that lint-free towelettes. The use of a normal cloth or paper for cleaning purposes is forbidden. These are not lint-free and may contaminate the fuel circuit of the system. Each lint-free cloth should only be used once.
- Carry out any servicing as much as possible with the plug cap installed in order to prevent impurities from entering the system.
- Instructions to be followed before opening the fuel circuit.
  - For each operation, use new thinner (used thinner contains impurities). Pour it into a clean receptacle.
  - For each operation, use a clean brush which is in good condition (the brush must not shed its bristles).
  - Use a brush and thinners to clean the connections to be opened.

  - Blow compressed air over the cleaned parts (tools, cleaned the same way as the parts, connections and injection system zone) Check that no bristles remain adhered.
  - Wash your hands before and during the operation if necessary.
  - When wearing leather protective gloves, cover these with latex gloves.
- Instructions to be followed during the operation.
  - As soon as the circuit is open, all openings must be plugged to prevent impurities from entering the system by using the plug cap. They must not, under any circumstances, be reused.
  - Close the hermetically seated bag, even if it has to be reopened shortly afterwards.
    Ambient air carries contamination.
  - All components of the injection system that are removed must be stored in a hermetically sealed plastic bag once the plugs have been inserted.
  - The use of a brush, thinner, bellows, sponge or normal cloth is strictly forbidden once the circuit has been opened.
    These items are likely to allow impurities to enter the system.
  - A new component replacing an old one must not be removed from its packaging until it is to be fitted to the vehicle.

Fuel delivery system components

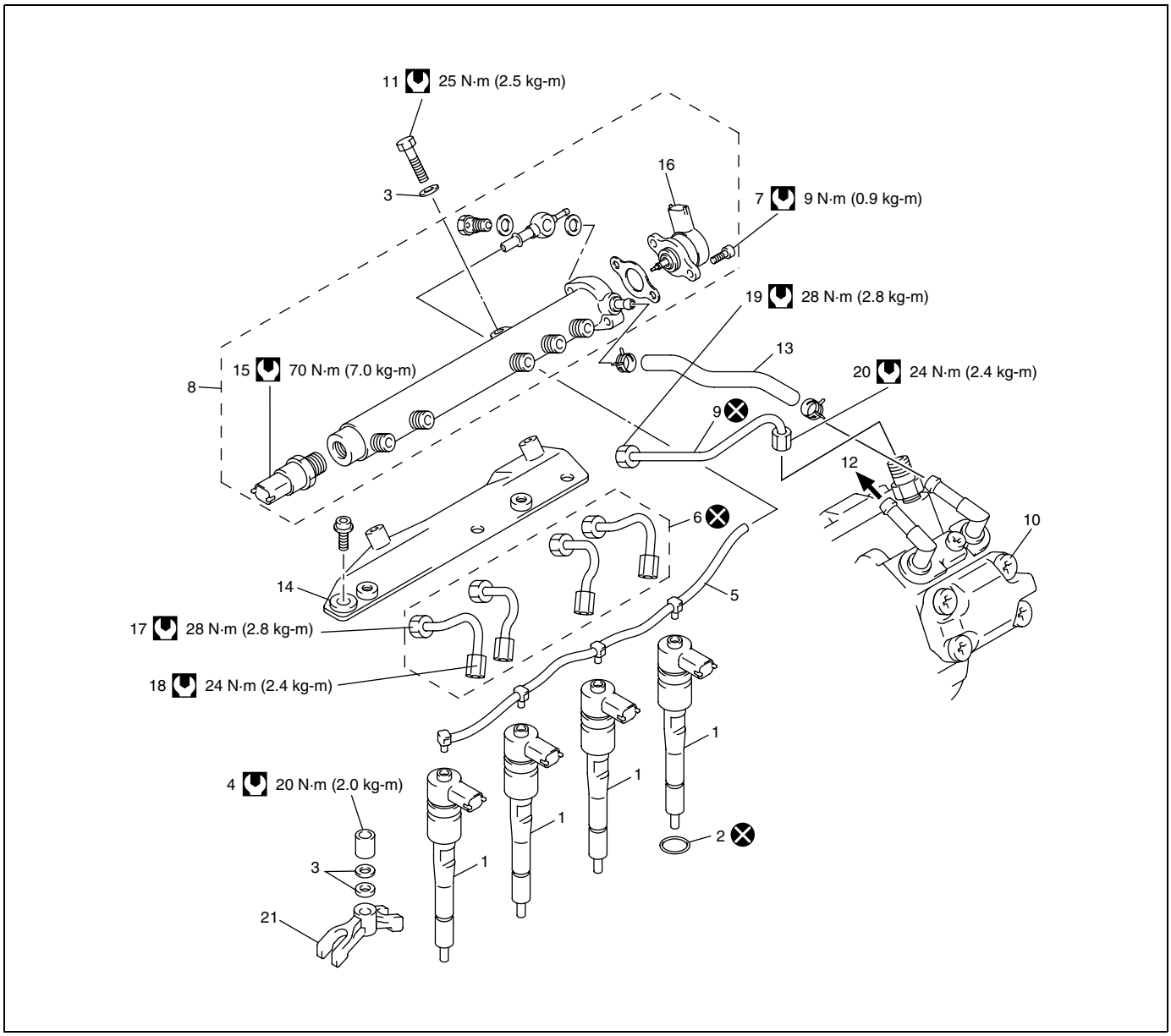

1. Fuel injector	7. Fuel pressure regulator bolt	13. Fuel return hose	19. High pressure supply pipe union nut (common rail side)
2. Sealing ring	8. Common rail	14. Common rail bracket	20. High pressure supply pipe union nut (injection pump side)
3. Washer	9. High pressure supply pipe	15. Fuel pressure sensor	21. Fuel injector bracket
4. Nut	10. Injection pump	16. Fuel pressure regulator	: Tightening torque
5. Return hose	11. Common rail bolt	17. High pressure pipe union nut (common rail side)	: Do not reuse.
6. High pressure pipe	12. To fuel feed pipe	18. High pressure pipe union nut (fuel injector side)	

Fuel leakage check

1) Turn ignition switch to ON position.
2) Check for the fuel leakage in each part, which was serviced.
3) Start the engine, and then check for the fuel leakage in each part, which was serviced.
4) Run engine at 4000 r/min. for about 30 seconds and then stop engine.
5) Check for the fuel leakage in each part, which was serviced.

Fuel pump on-vehicle inspection

1) Check that fuel pump operating sound is heard from fuel pump for about 20 seconds and then stop when turning ignition switch to ON position.
   If above check result is not satisfactory, confirm that check result of each step is in good condition referring to “C-06, Fuel Pump Relay Circuit” in Section 6-3.

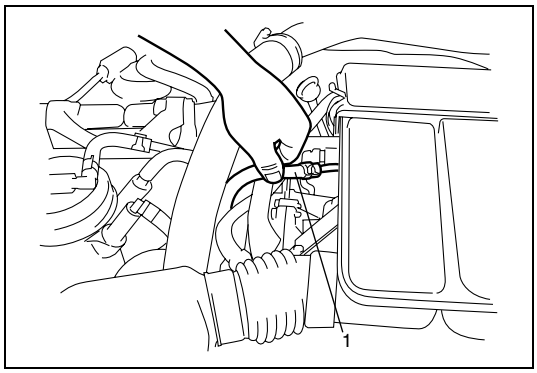

2) Check that fuel pressure is felt at fuel feed hose (1) for about 20 seconds after ignition switch ON.
   If fuel pressure is not felt, check fuel leakage from fuel line and clogged fuel line.

Fuel pump removal and installation

Refer to “Fuel Pump Assembly Removal and Installation” in Section 6C3.

Fuel pump inspection

Refer to “Fuel Pump Inspection” in Section 6C3.

Fuel injector on-vehicle inspection

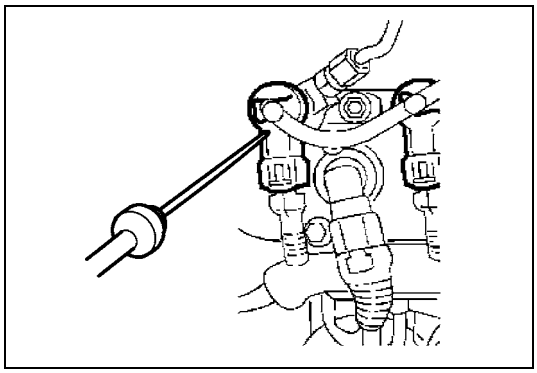

1) Using sound scope or such, check operating sound of injector when engine is running or cranking.
   Cycle of operating sound should vary according to engine speed.
   If no sound or an unusual sound is heard, confirm that check result of each step is in good condition referring to "C-24, Cylinder 1 Injector Circuit", "C-25, Cylinder 2 Injector Circuit", "C-26, Cylinder 3 Injector Circuit" or "C-27, Cylinder 4 Injector Circuit" in Section 6-3.

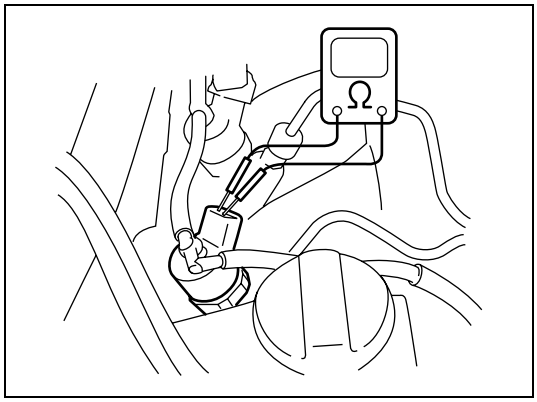

2) Disconnect coupler from injector, connect ohmmeter between terminals of injector and check resistance.
   If resistance is out of specification, replace.

   Resistance of injector
   about 0.5 Ω

3) Connect coupler to injector securely.

Fuel injector removal and installation

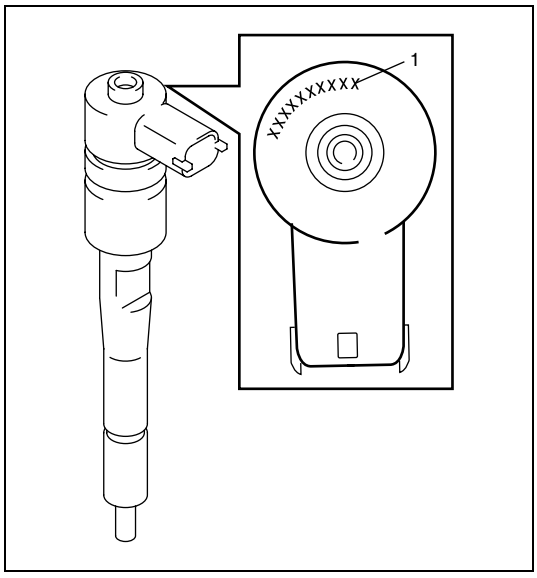

NOTE:

- **The calibration code (1) is the code that is given to each fuel injector, and it represents the performance characteristics of the fuel injector. It is registered in ECM, and ECM controls fuel injection according to the performance characteristics of the fuel injector. Therefore, after removing fuel injectors, be sure to install them as they were. In case that the fuel injectors were replaced with new ones, be sure to register each calibration code in ECM referring to "ECM registration" in this section. For your reference, it is possible to know what calibration codes are currently registered in ECM.**
- **In case the calibration code (1) is indicated with 10 digits, only the first 9 digits should be registered with 10th digit ignored.**

Removal

1) Disconnect negative (–) cable at battery.
2) Remove air cleaner assembly referring to “Air Cleaner Assembly Removal and Installation” in Section 6A3.

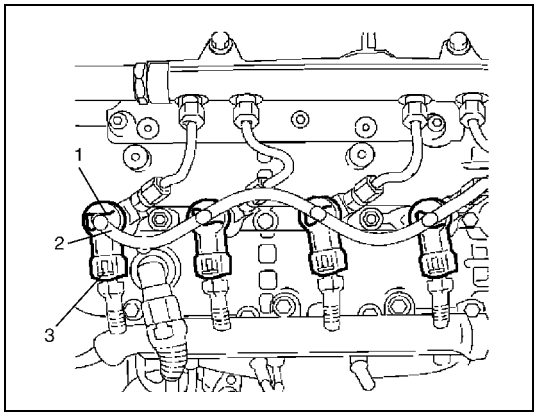

3) Remove clips (1), and then disconnect return hose (2) from fuel injectors.
4) Disconnect fuel injector connectors (3).

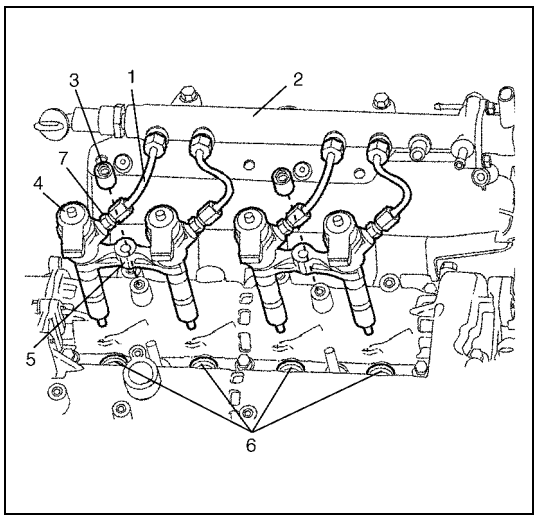

5) Remove high pressure pipes (1).
   When loosening union nut of high pressure pipe, holding union nut (7) of fuel injector (4) with wrench.
6) Remove fuel injector bracket nut (3).
7) Remove fuel injectors with its bracket (5) from camshaft housing.
8) Remove sealing rings (6) from camshaft housing.

2. Common rail

Installation

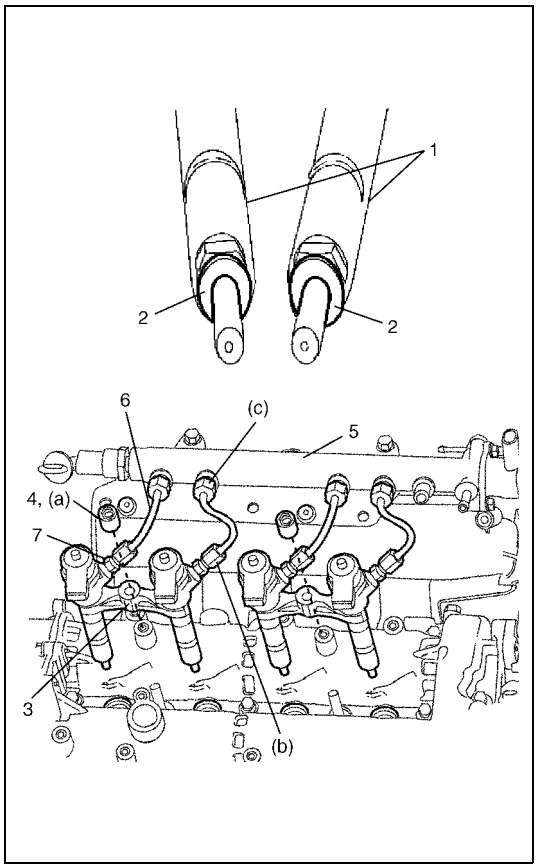

1) Install new sealing rings (2) to fuel injectors (1).
2) Set fuel injector bracket (3) to fuel injectors.
3) Install fuel injectors to camshaft housing and tighten fuel injector bracket nut (4) temporarily by hand.
4) Install new high pressure pipes (6) and tighten each union nut temporarily by hand.
5) Tighten fuel injector bracket nut to specified torque.

Tightening torque
Fuel injector bracket nut
(a): 20 N·m (2.0 kg-m, 14.5 lb-ft)

6) Tighten high pressure pipe union nuts to specified torque.
When tightening union nut of high pressure pipe, holding union nut (7) of fuel injector with wrench.

Tightening torque
High pressure pipe union nut (fuel injector side)
(b): 24 N·m (2.4 kg-m, 17.5 lb-ft)
High pressure pipe union nut (common rail side)
(c): 28 N·m (2.8 kg-m, 20.5 lb-ft)

5. Common rail

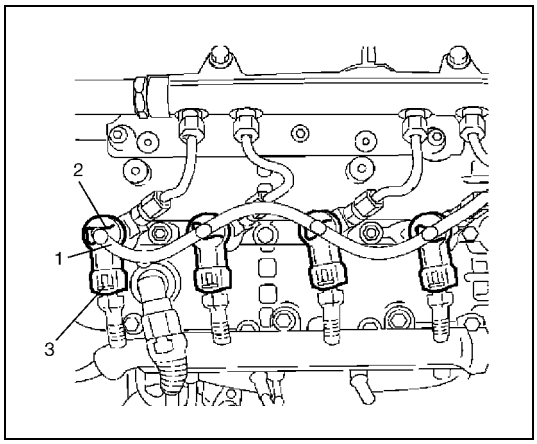

7) Connect return hose (1) to fuel injectors and then install clips (2) to fuel injectors.
8) Connect fuel injector connectors (3).
9) Install air cleaner assembly referring to “Air Cleaner Assembly Removal and Installation” in Section 6A3.
10) Connect negative (–) cable at battery.
In case that the fuel injector(s) was replaced, perform “ECM registration” in this section to register the fuel injector calibration code into ECM.
11) Check fuel leakage referring to “Fuel leakage check” in this section.

Common rail (High pressure fuel injection rail) removal and installation

Removal

1) Disconnect negative cable from battery.
2) Remove air cleaner assembly referring to “Air Cleaner Assembly Removal and Installation” in Section 6A3.

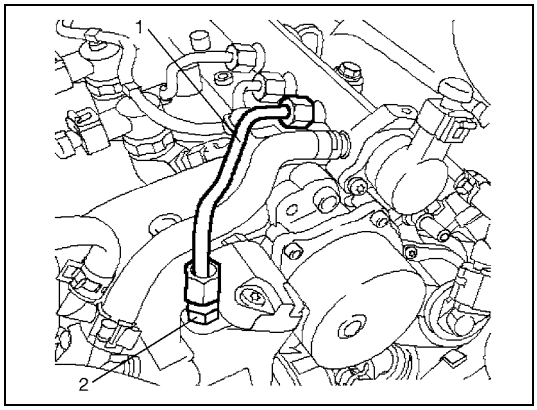

3) Remove high pressure supply pipe (1) from injection pump and common rail.
   When loosening union nut of high pressure supply pipe, holding union nut (2) of injection pump with wrench.
4) Remove high pressure pipes from fuel injectors and common rail referring to Step 5) of “Removal” under “Fuel injector removal and installation” in this section.

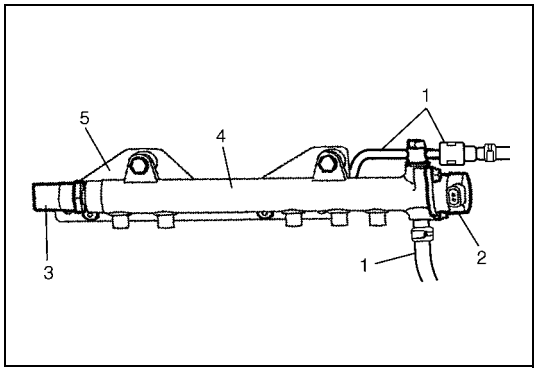

5) Disconnect fuel return hoses (1) from common rail.
6) Disconnect connectors from fuel pressure regulator (2) and fuel pressure sensor (3).
7) Remove common rail (4) from its bracket (5).

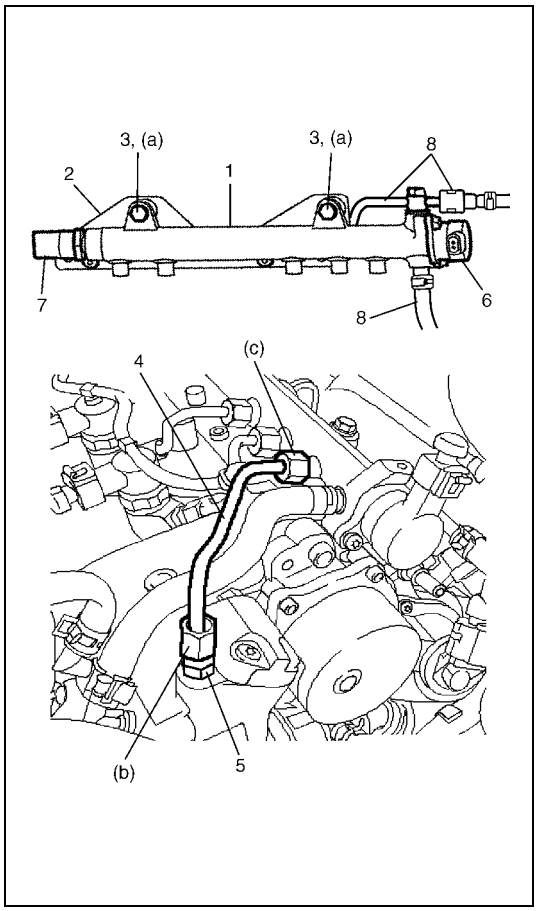

Installation

1) Install common rail (1) to its bracket (2) and tighten common rail bolts (3) temporarily by hand.
2) Install new high pressure pipes for injectors and new high pressure supply pipe (4). Tighten each union nut temporarily by hand.
3) Tighten common rail bolts to specified torque.

Tightening torque
Common rail bolt (a): 25 N·m (2.5 kg-m, 18.0 lb-ft)

4) Tighten high pressure supply pipe union nuts to specified torque.
   When tightening union nut of high pressure supply pipe, holding union nut (5) of injection pump with wrench.

Tightening torque
High pressure supply pipe union nut (injection pump side) (b): 24 N·m (2.4 kg-m, 17.5 lb-ft)
High pressure supply pipe union nut (common rail side) (c): 28 N·m (2.8 kg-m, 20.5 lb-ft)

5) Tighten high pressure pipe union nuts to specified torque referring to Step 6) of “Installation” under “Fuel injector removal and installation” in this section.
6) Connect connectors to fuel pressure regulator (6) and fuel pressure sensor (7).
7) Connect fuel return hoses (8) to common rail.
8) Install air cleaner assembly referring to “Air Cleaner Assembly Removal and Installation” in Section 6A3.
9) Connect negative cable to battery.
10) Check fuel leakage referring to “Fuel leakage check” in this section.

Injection pump removal and installation

Removal

1) Disconnect negative cable at battery.
2) Remove air cleaner assembly referring to “Air Cleaner Assembly Removal and Installation” in Section 6A3.
3) Remove vacuum pump referring to “Vacuum pump removal and installation” in this section.
4) Remove high pressure supply pipe referring to Step 3) of “Removal” under “Common rail (High pressure fuel injection rail) removal and installation” in this section.

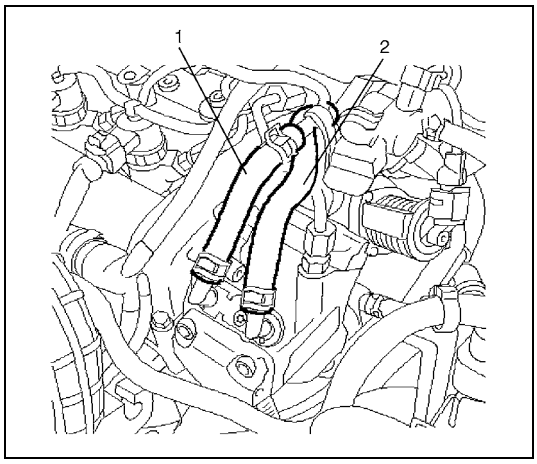

5) Disconnect fuel feed hose (1) and fuel return hose (2) from injection pump.

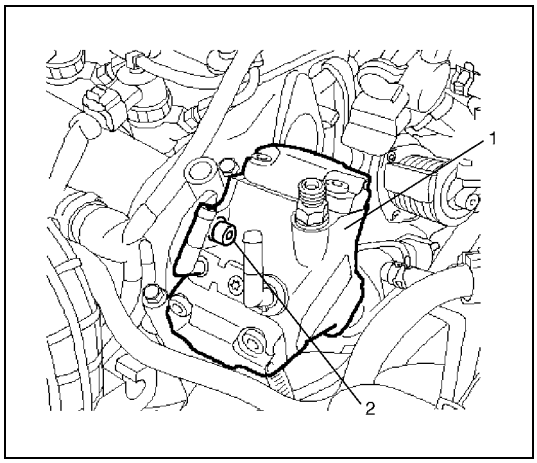

6) Remove injection pump (1) from camshaft housing by removing 3 bolts (2).

Installation

1) Clean mating surfaces of injection pump and camshaft housing.

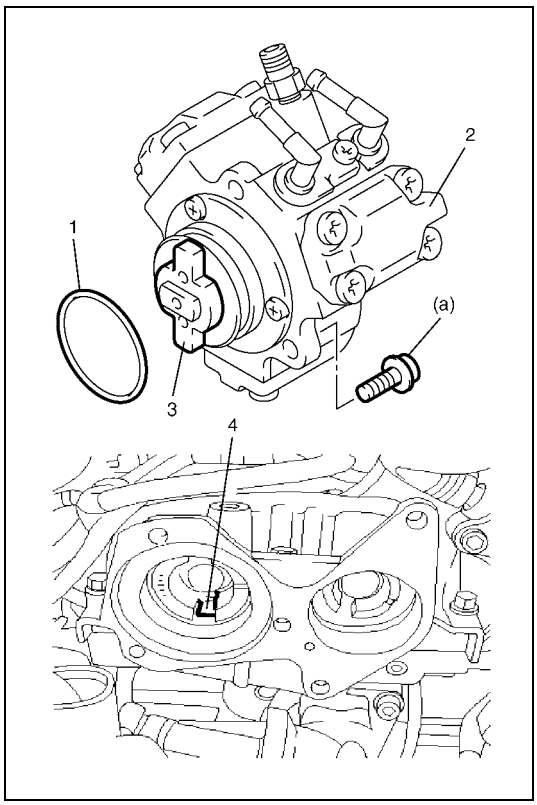

2) Install new gasket (1) to injection pump.
3) Install injection pump (2) to camshaft housing.
   Fit dogs (3) of injection pump coupling into the groove (4) of camshaft.
4) Tighten injection pump bolts to specified torque.

Tightening torque
Injection pump bolt (a): 15 N·m (1.5 kg-m, 11.0 lb-ft)

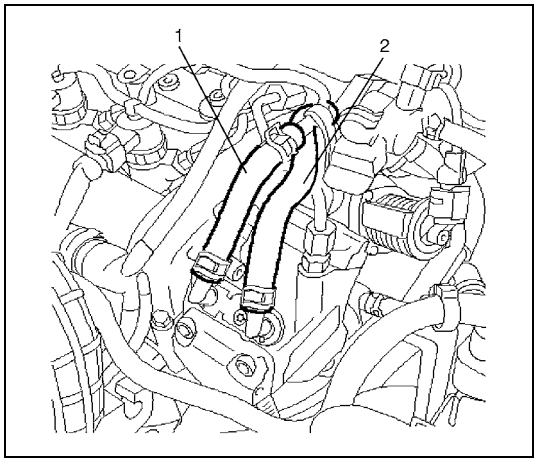

5) Connect fuel feed hose (1) and fuel return hose (2) to injection pump.

6) Install new high pressure supply pipe referring to Step 2) and 4) of “Installation” under “Common rail (High pressure fuel injection rail) removal and installation” in this section.
7) Install vacuum pump referring to “Vacuum pump removal and installation” in this section.
8) Remove air cleaner assembly referring to “Air Cleaner Assembly Removal and Installation” in Section 6A3.
9) Connect negative cable to battery.
10) Check fuel leakage referring to “Fuel leakage check” in this section.

Electronic Control System

Engine control module (ECM) removal and installation

CAUTION:
As ECM consists of precision parts, be careful not to expose it to excessive shock.

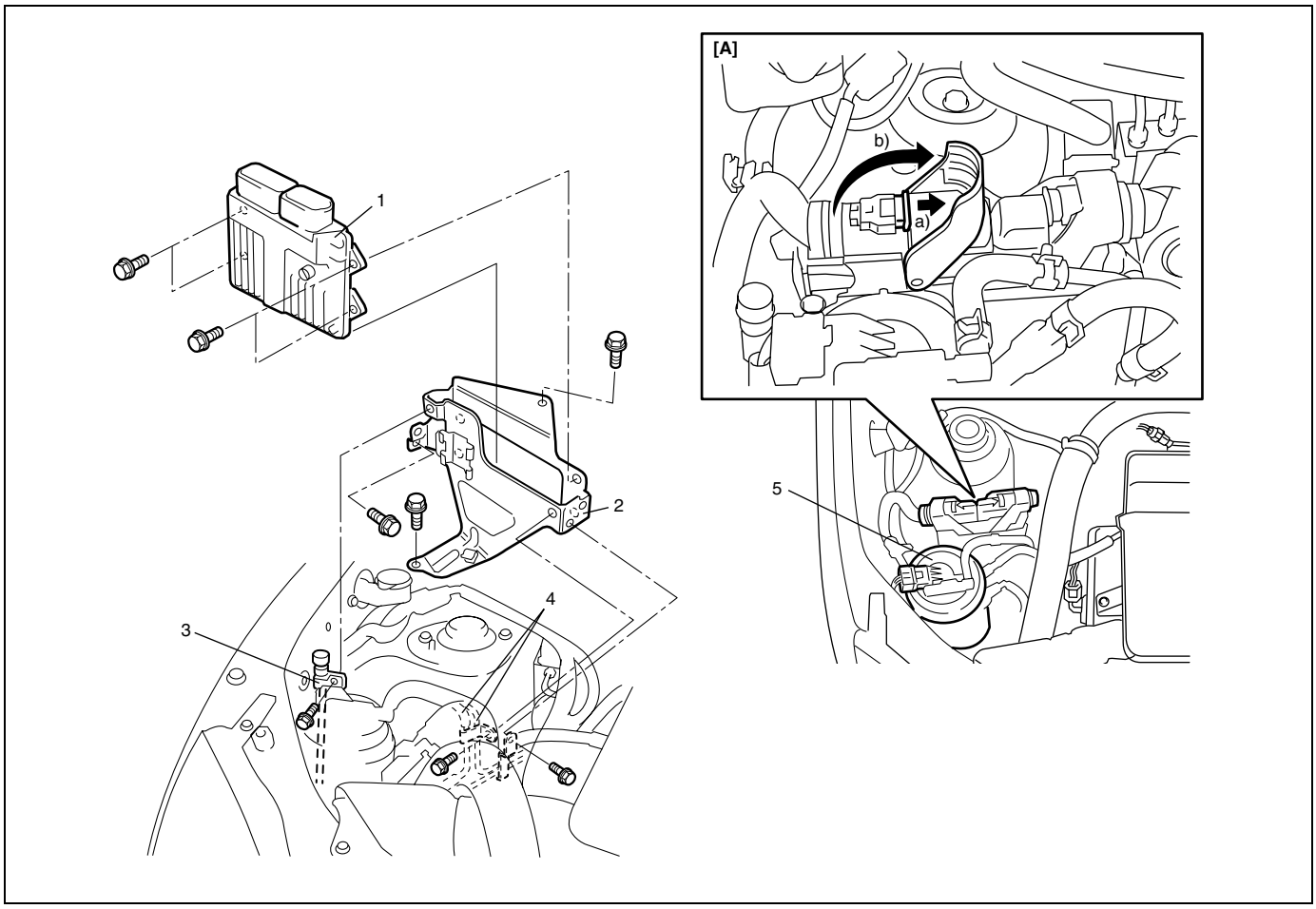

[A]: Disconnecting procedure for ECM connector	2. ECM bracket	4. Fuel pipe
1. ECM	3. A/C refrigerant pipe	5. Fuel filter assembly

Removal

1) Disconnect negative cable at battery.
2) Disconnect connector from fuel filter assembly and then detach fuel filter assembly from ECM bracket.
3) Remove fuel pipe mounting bolts and A/C refrigerant pipe mounting bolt.

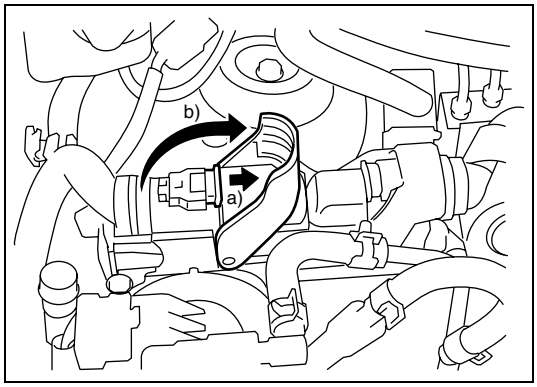

4) Disconnect connectors from ECM as follows.
   a) Pull out lock slider to release locking of lock lever
   b) Pull up the lock lever
5) Remove ECM with its bracket from vehicle body.
6) Remove ECM from ECM bracket.

Installation

NOTE:

If ECM is replaced, register vehicle specification (fuel injector calibration code, vehicle variant, password for immobilizer system and secret key code for immobilizer system) into ECM referring to "ECM registration" in this section and "Procedure after ECM replacement" in Section 8G3.

Reverse removal procedure for installation.

ECM registration

Procedure after ECM replacement

1) Connect SUZUKI scan tool to DLC.
2) Register the following information for ECM referring to “SUZUKI Scan Tool Operator’s Manual”.
   - Fuel injector calibration code
   - Vehicle variant (vehicle configuration (equipment such as ABS and A/C))
3) Using SUZUKI scan tool, register secret key code (SKC) and password for immobilizer system referring to “SUZUKI Scan Tool Operator’s Manual”.
4) Check for registration data referring to “Registration data check” in this section.

Procedure after fuel injector replacement

1) Connect SUZUKI scan tool to DLC.
2) Register the calibration code of the fuel injector, which is newly installed, for ECM referring to “SUZUKI Scan Tool Operator’s Manual”.
3) Check for registration data referring to “Registration data check” in this section.

Registration data check

1) Connect SUZUKI scan tool to data link connector (DLC) located on underside of instrument panel at driver's seat side.

Special tool
SUZUKI scan tool

2) Turn ignition switch to ON position.
3) Select "Data List" of "ECM registration" under "MISC Test" command in SELECT MODE menu of SUZUKI scan tool.
4) Confirm whether fuel injector calibration code and vehicle variant (vehicle configuration (equipment such as ABS and A/C)) installed on correspond to specification displayed on SUZUKI scan tool.
   Register fuel injector calibration code and vehicle variant (vehicle configuration (equipment such as ABS and A/C)) into ECM referring to "ECM registration" in this section when it does not correspond.
5) Push "EXIT" button of SUZUKI scan tool.

Mass air flow (MAF) and intake air temperature (IAT) sensor removal and installation

CAUTION:

- **Do not cleansing MAF and IAT sensor.**
- **If MAF and IAT sensor has been dropped it should be replaced.**
- **Don't disassemble MAF and IAT sensor.**
- **Do not expose MAF and IAT sensor to any shock.**
- **Do not blow compressed air by using air gun or the like.**
- **Do not put finger or any other object into MAF and IAT sensor. Malfunction may occur.**

Removal

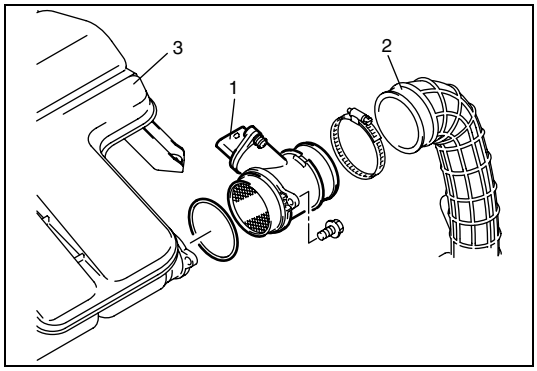

1) Disconnect negative cable at battery and coupler from MAF and IAT sensor (1).
2) Disconnect air cleaner outlet hose (2) from MAF and IAT sensor.
3) Remove MAF and IAT sensor from air cleaner case (3).

Installation

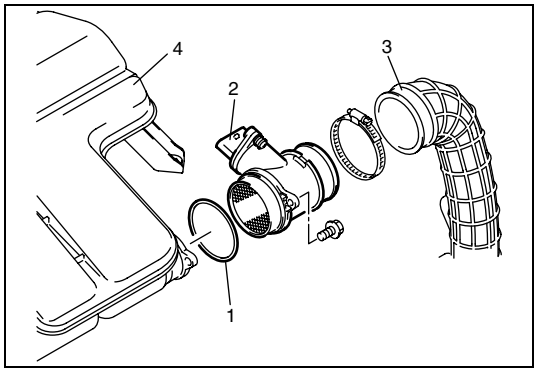

1) Check MAF and IAT sensor O-ring (1) for deterioration and damage.
   If malfunction is found, replace O-ring.
2) Install MAF and IAT sensor (2) to air cleaner case (4).
3) Connect air cleaner outlet hose (3).
   Tighten hose clamp to specified torque referring to "Air Cleaner Assembly Removal and Installation" in Section 6A3.
4) Connect MAF sensor coupler securely.
5) Connect battery negative cable to battery.

Glow plug removal and installation

Removal

CAUTION:
- **Do not damage heating section of the glow plug.**
- **Do not use glow plug that has been dropped.**
- **When removing glow plug, first loosen it by using a tool so that one or more screw threads remain engaged, then loosen and remove by hand.**

1) Disconnect negative (–) cable at battery.

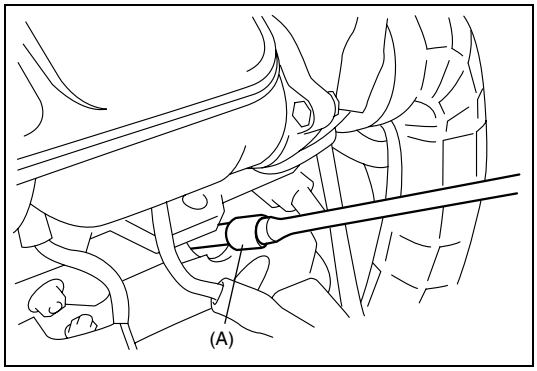

2) Pull off glow plug wires (1).
3) Remove glow plugs (2) from cylinder head.

Special tool
(A): 09911-78610

Installation

For installation, reverse removal procedure noting the following.

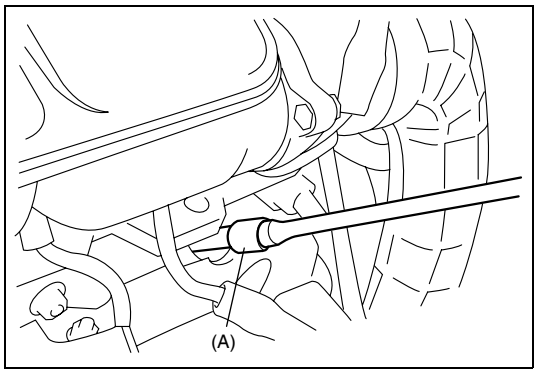

- Tightening glow plug (1) to specified torque.

Special tool
(A): 09911-78610

Tightening torque
Glow plug (a): 10 N·m (1.0 kg-m, 7.5 lb-ft)

- Connect glow plug wires (2) securely.

Pedal position sensor removal and installation

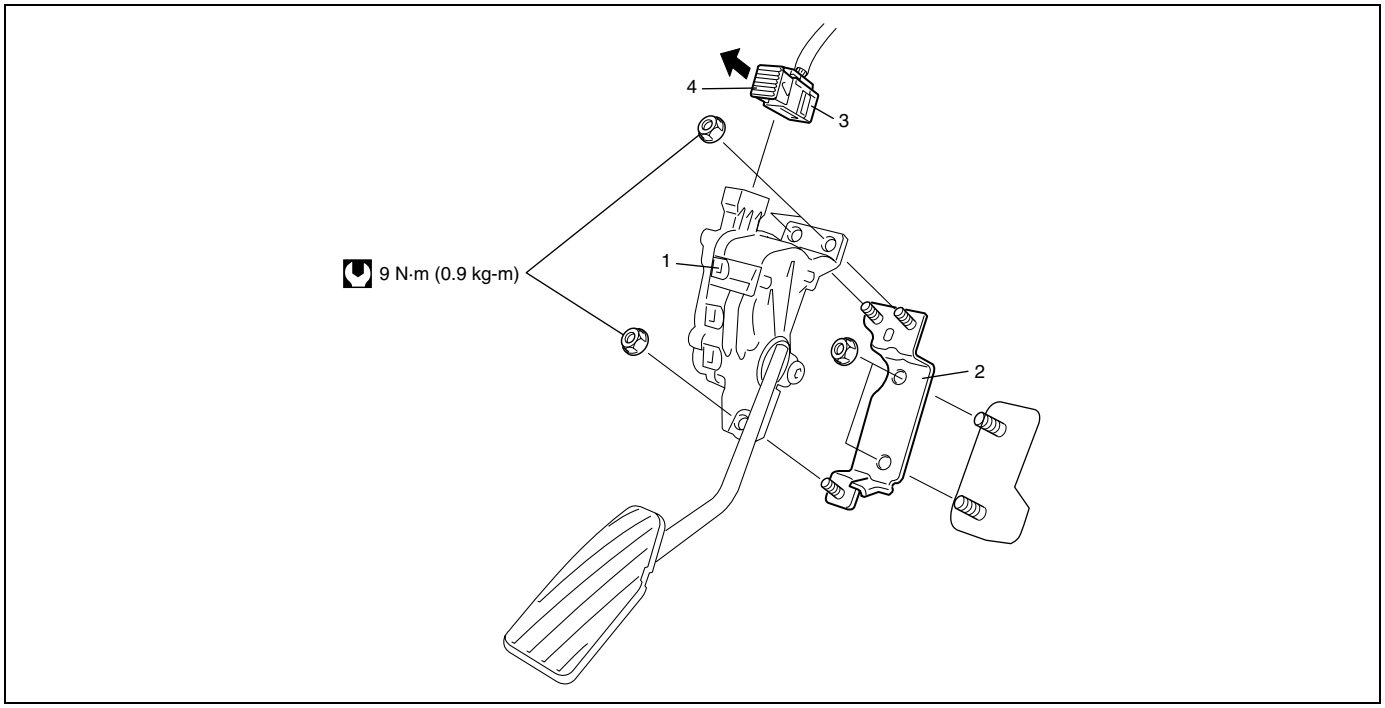

1. Accelerator pedal assembly	3. Pedal position sensor connector	: Tightening torque
2. Accelerator pedal bracket	4. Pedal position sensor connector lock lever	

Removal

1) Disconnect negative cable at battery.
2) Disconnect connector from pedal position sensor by pull off the lock lever.
3) Remove accelerator pedal assembly from vehicle body.

Installation

Reverse removal procedure for installation noting the followings.

- Connect pedal position sensor connector securely.
- Tighten accelerator pedal assembly mounting nuts to specified torque.

Tightening torque
Accelerator pedal mounting nut
(a): 9 N·m (0.9 kg-m, 6.5 lb-ft)

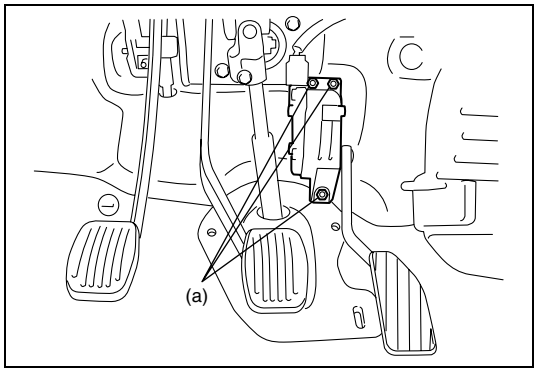

Fuel heater and temperature sensor removal and installation

Removal

1) Disconnect negative cable at battery.
2) Remove fuel heater and temperature sensor (fuel filter cap) referring to “Fuel Filter Element Removal and Installation” in Section 6C3.

Installation

Reverse removal procedure for installation.

Fuel temperature sensor inspection

1) Remove fuel temperature sensor referring to “Fuel heater and temperature sensor removal and installation” in this section.

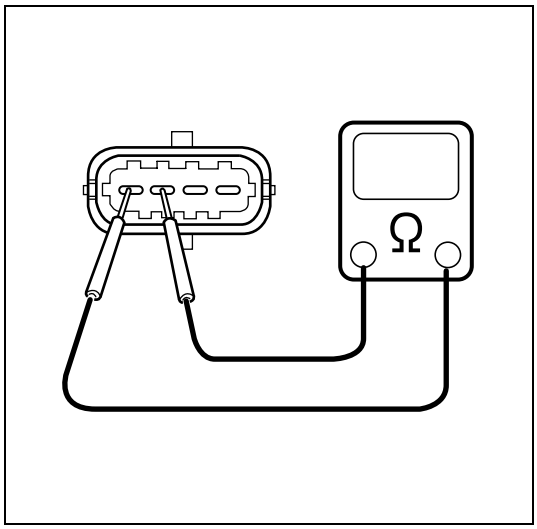

2) Check for resistance between fuel temperature sensor terminals.
   If not as specified, replace fuel heater and temperature sensor.

Fuel temperature sensor resistance

Water temperature °C (°F)	Resistance (kΩ)
0 (32)	5.97
20 (68)	2.50
40 (104)	1.15
60 (140)	0.58
80 (176)	0.31
100 (212)	0.18

Fuel pressure sensor removal and installation

Removal

1) Disconnect negative cable at battery.
2) Remove air cleaner assembly referring to “Air Cleaner Assembly Removal and Installation” in Section 6A3.
3) Disconnect fuel pressure sensor connector.

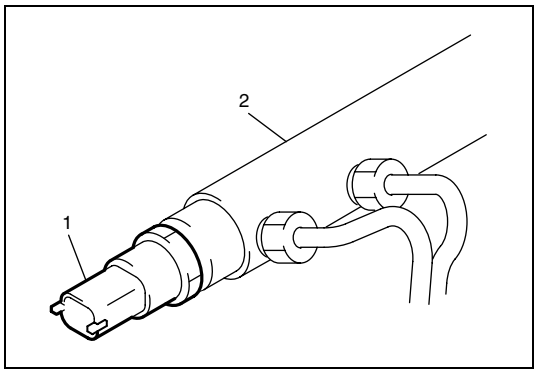

4) Remove fuel pressure sensor (1) from common rail (2).

Installation

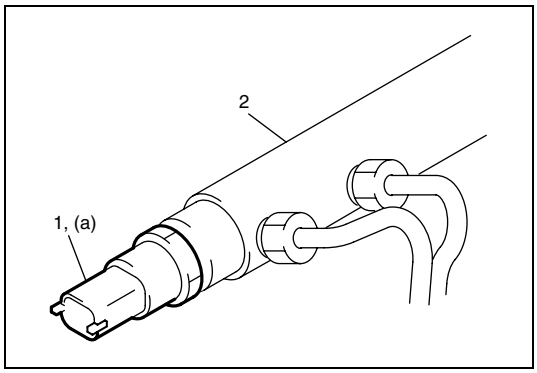

1) Install fuel pressure sensor (1) to common rail (2). Tighten fuel pressure sensor to specified torque.

Tightening torque
Fuel pressure sensor
(a): 70 N·m (7.0 kg-m, 50.5 lb-ft)

2) Connect fuel pressure sensor connector.
3) Install air cleaner assembly referring to “Air Cleaner Assembly Removal and Installation” in Section 6A3.
4) Connect negative cable to battery.
5) Check fuel leakage referring to “Fuel leakage check” in this section.

Fuel pressure regulator removal and installation

Removal

1) Disconnect negative cable at battery.
2) Remove vacuum pump referring to “Vacuum pump removal and installation” in this section.
3) Disconnect fuel pressure regulator connector.

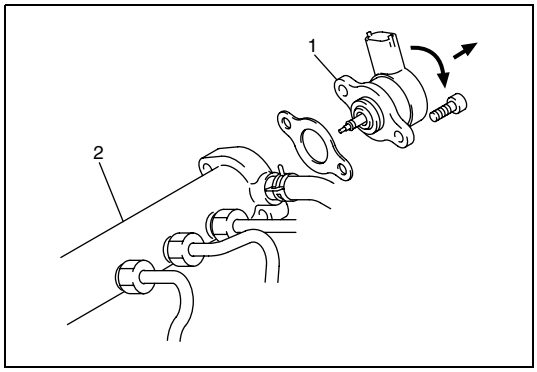

4) Pull out fuel pressure regulator (1) from common rail (2) with turning it counterclockwise by hand.

Installation

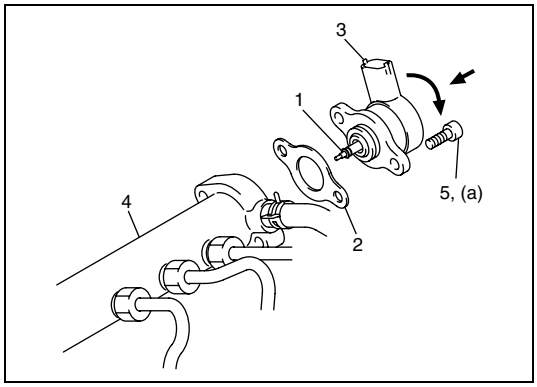

1) Apply fuel to seal rings (1) of fuel pressure regulator.
2) Using new gasket (2), push fuel pressure regulator (3) to common rail (4) with turning it counterclockwise by hand.
3) Tighten fuel pressure regulator bolts (5) to specified torque.

Tightening torque
Fuel pressure regulator bolt
(a): 9 N·m (0.9 kg-m, 6.5 lb-ft)

4) Install vacuum pump referring to “Vacuum pump removal and installation” in this section.
5) Connect negative cable to battery.
6) Check fuel leakage referring to “Fuel leakage check” in this section.

Fuel pressure regulator inspection

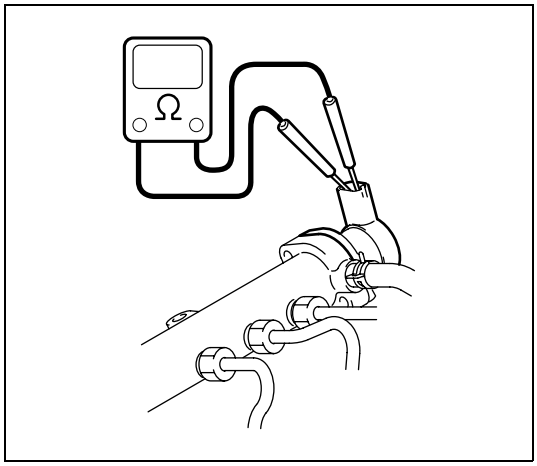

Check resistance between terminals of fuel pressure regulator.
If resistance is out of specification, replace fuel pressure regulator referring to “Fuel pressure regulator removal and installation” in this section.

Fuel pressure regulator resistance
2.07 – 2.53 Ω at 20°C, 68°F

Engine coolant temperature sensor (ECT sensor) removal and installation

Removal

1) Disconnect negative cable at battery.
2) Drain cooling system.

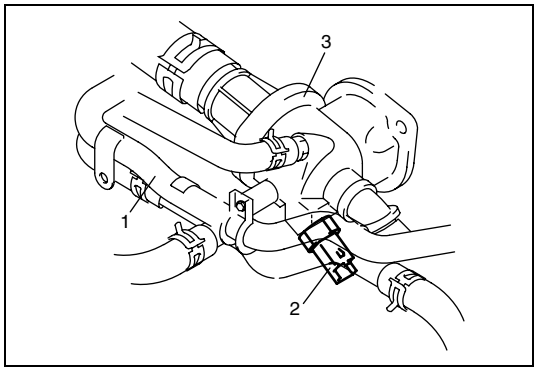

3) Detach heater outlet pipe (1).
4) Disconnect ECT sensor connector.
5) Remove ECT sensor (2) from thermostat housing (3).

Installation

1) Apply thread lock compound to thread part of ECT sensor.

: Loctite omnifit 100 M spezial

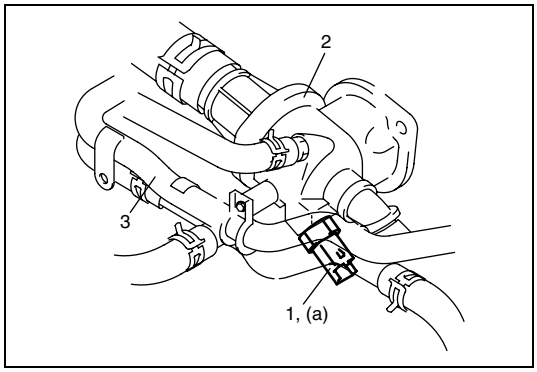

2) Install ECT sensor (1) to thermostat housing (2).
   Tighten ECT sensor to specified torque.

Tightening torque
ECT sensor
(a): 34 N·m (3.4 kg-m, 24.5 lb-ft)

3) Connect ECT sensor connector.
4) Install heater outlet pipe (3).

5) Refill cooling system referring to “Cooling System Flush and Refill” in Section 6B3.
6) Connect negative cable to battery.
7) Check cooling system leakage referring to “Cooling System Inspection and Service” in Section 6B3.

Engine coolant temperature sensor (ECT sensor) inspection

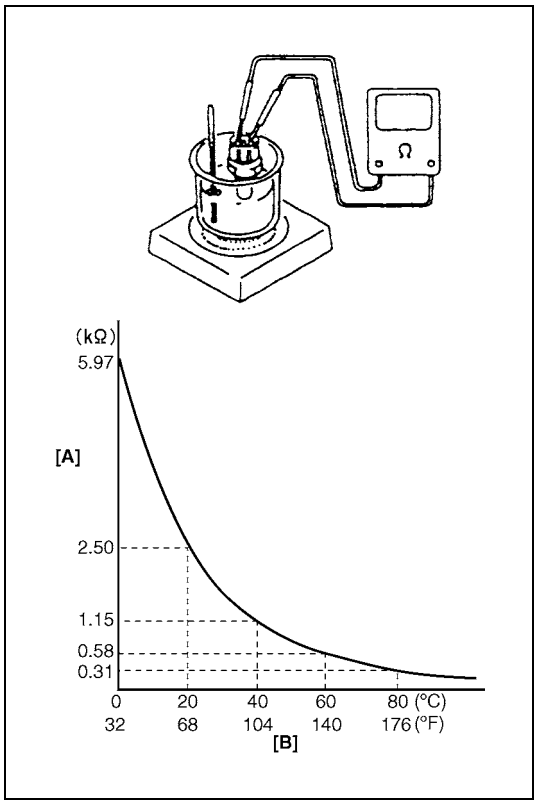

1) Remove ECT sensor referring to “Engine coolant temperature sensor (ECT sensor) removal and installation” in this section.
2) Immerse temperature sensing part of ECT sensor in water and measure resistance between sensor terminals while heating water gradually.
   If measured resistance doesn’t shown such characteristic as shown, replace ECT sensor.

ECT sensor resistance

Water temperature °C (°F)	Resistance (kΩ)
0 (32)	5.97
20 (68)	2.50
40 (104)	1.15
60 (140)	0.58
80 (176)	0.31
100 (212)	0.18

1. Resistance
2. Temperature

Camshaft position sensor (CMP sensor) removal and installation

Removal

1) Disconnect negative cable at battery.
2) Remove air cleaner assembly referring to “Air Cleaner Assembly Removal and Installation” in Section 6A3.
3) Disconnect CMP sensor connector.

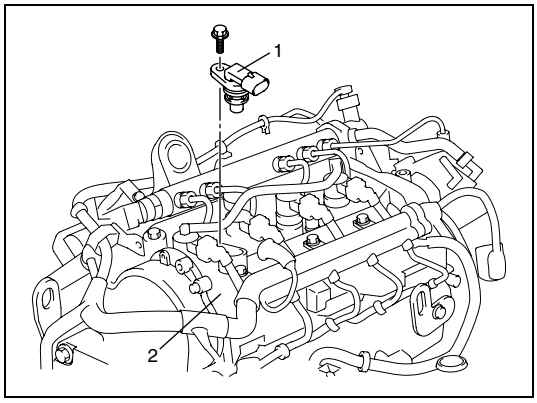

4) Remove CMP sensor (1) from camshaft housing (2).

Installation

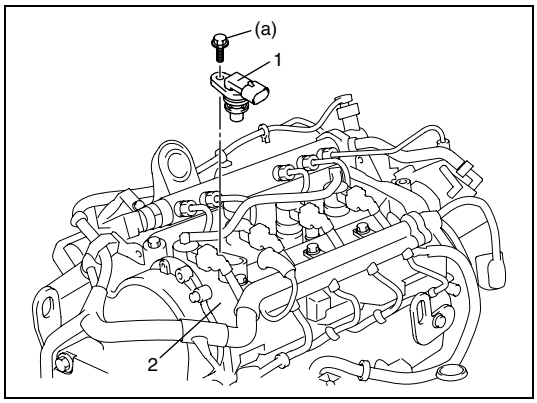

1) Install CMP sensor (1) to camshaft housing (2).
   Tighten CMP sensor bolt to specified torque.

Tightening torque
CMP sensor bolt (a): 7 N·m (0.7 kg-m, 5.0 lb-ft)

2) Connect CMP sensor connector.
3) Install air cleaner assembly referring to “Air Cleaner Assembly Removal and Installation” in Section 6A3.
4) Connect negative cable to battery.

Crankshaft position (CKP) sensor (engine speed sensor) removal and installation

Removal

1) Disconnect negative cable at battery.
2) Hoist vehicle.
3) Disconnect CKP sensor connector.

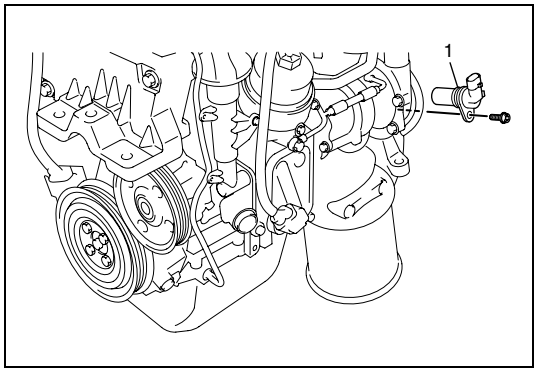

4) Remove CKP sensor (1) from cylinder block.

Installation

Reverse removal procedure for installation noting the following.

- Clean CKP sensor and sensor rotor teeth.
- Install CKP sensor (1) to cylinder block.

Tightening torque
CKP sensor bolt (a): 9 N·m (0.9 kg-m, 6.5 lb-ft)

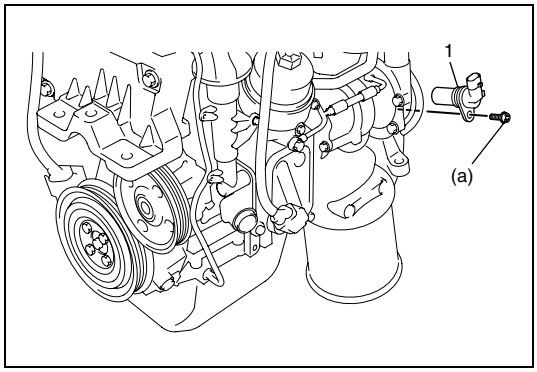

Crankshaft position (CKP) sensor (engine speed sensor) inspection

1) Remove CKP sensor referring to “Crankshaft position (CKP) sensor (engine speed sensor) removal and installation” in this section.
2) Check that CKP sensor (1) and sensor rotor tooth (2) is free from any metal particles and damage.

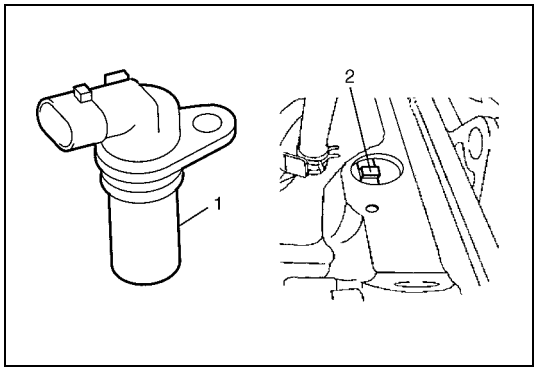

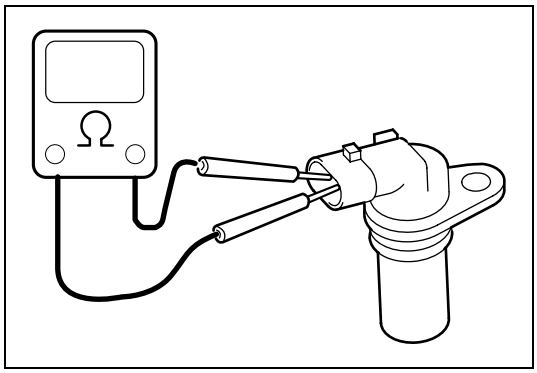

3) Check that resistance between terminals of CKP sensor is within specification.
   If above check as not specified, replace CKP sensor.

CKP sensor resistance: 632 – 948 Ω

Engine oil level switch removal and installation (If equipped)

Removal

1) Disconnect negative cable at battery.
2) Remove oil pan referring to “Oil Pan Removal and Installation” in Section 6A3.

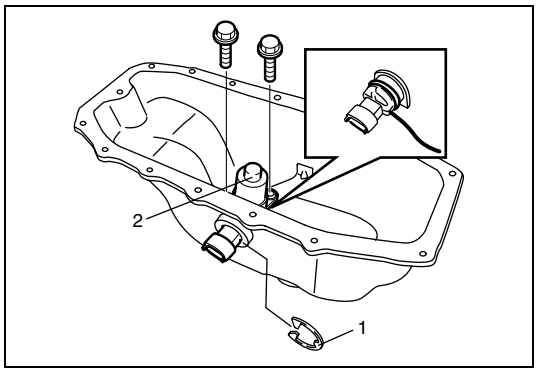

3) Remove clip (1).
4) Remove engine oil level switch (2) from oil pan.

Installation

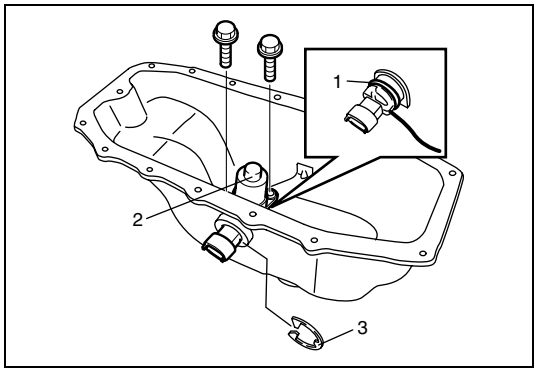

1) Check O-ring (1) of engine oil level switch deformed or damage.
   If malfunction is found, replace engine oil level switch.
2) Install engine oil level switch (2) to oil pan.
3) Install clip (3) to engine oil level switch connector securely.
4) Install oil pan referring to “Oil Pan Removal and Installation” in Section 6A3.
5) Connect negative cable to battery.
6) Check to make sure that there is no engine oil leakage.

Engine oil level switch inspection (If equipped)

1) Disconnect negative cable at battery.
2) Hoist vehicle.

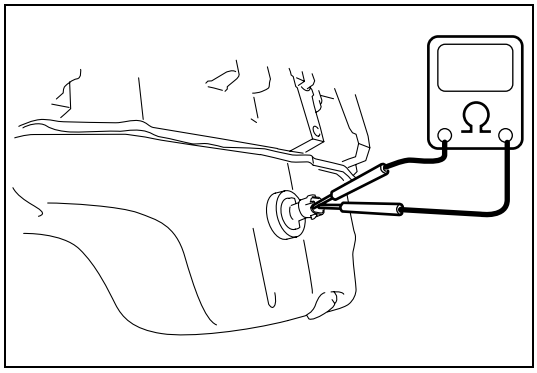

3) Check for continuity between terminals of engine oil level switch.
   If found defective, replace engine oil level switch.

Engine oil level switch specification
When engine oil is filled up to specified level: Continuity
When engine oil is drained: No continuity

Boost pressure sensor removal and installation

Removal

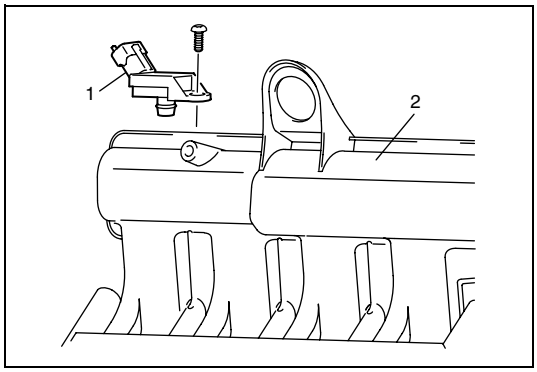

1) Disconnect negative cable at battery.
2) Disconnect connector from boost pressure sensor (1).
3) Remove boost pressure sensor from intake manifold.

Installation

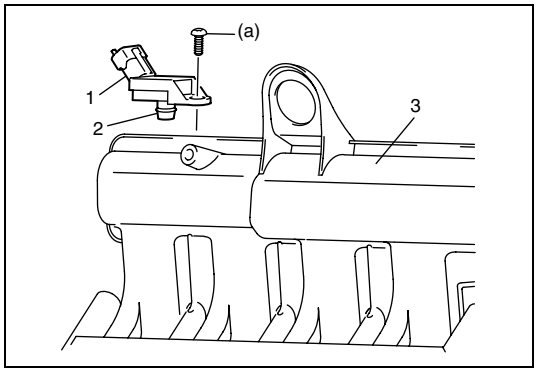

1) Check O-ring (2) of boost pressure sensor (1) deformed or damage.
   If malfunction is found, replace boost pressure sensor.
2) Install boost pressure sensor (1) to intake manifold (3).
   Tighten boost pressure sensor bolt to specified torque.

Tightening torque
Boost pressure sensor bolt
(a): 9 N·m (0.9 kg-m, 6.5 lb-ft)

3) Connect connector to boost pressure sensor securely.
4) Connect negative cable at battery.

Radiator fan control system inspection

WARNING:

Keep hands, tools, and clothing away from engine cooling fan to help prevent personal injury. This fan is electric and can come on whether or not the engine is running. The fan can start automatically in response to the ECT sensor with the ignition switch in the "ON" position.

Check system for operation referring to "C-32, Fan Circuit" in Section 6-3.
If radiator fan fails to operate properly, check relay, radiator fan and electrical circuit.

Fuel pump relay and radiator fan relay 1, 2, 3 inspection

NOTE:

Check for installation position of each relay referring to "Wiring Diagram Manual" described in "Foreword" of this manual.

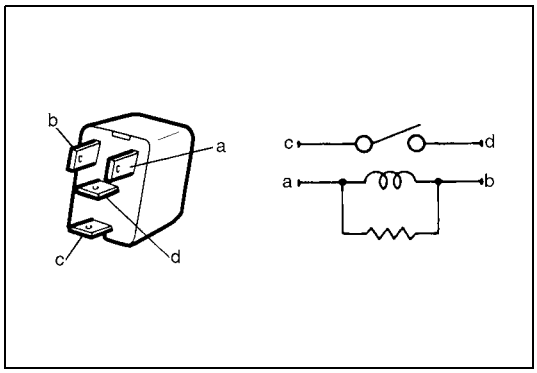

1) Check that there is no continuity between terminal "c" and "d".
   If there is continuity, replace relay.
2) Connect battery positive (+) terminal to terminal "b" of relay.
   Connect battery negative (–) terminal "a" of relay.
   Check continuity between terminal "c" and "d".
   If there is no continuity when relay is connected to the battery, replace relay.

Main relay and fuel heating relay inspection

NOTE:

Check for installation position of each relay referring to "Wiring Diagram Manual" described in "Foreword" of this manual.

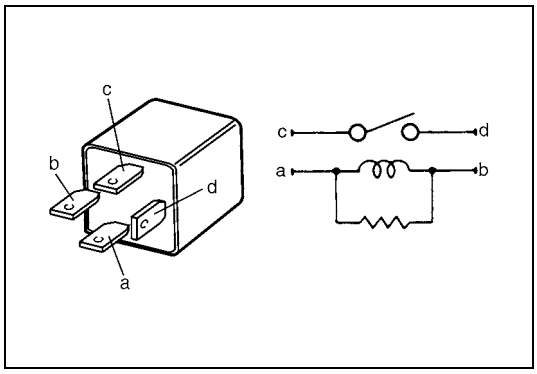

1) Check that there is no continuity between terminal "c" and "d".
   if there is continuity, replace relay.
2) Connect battery positive (+) terminal to terminal "b" of relay.
   Connect battery negative (–) terminal "a" of relay.
   Check continuity between terminal "c" and "d".
   If there is no continuity when relay is connected to the battery, replace relay.

Glow controller removal and installation

Removal

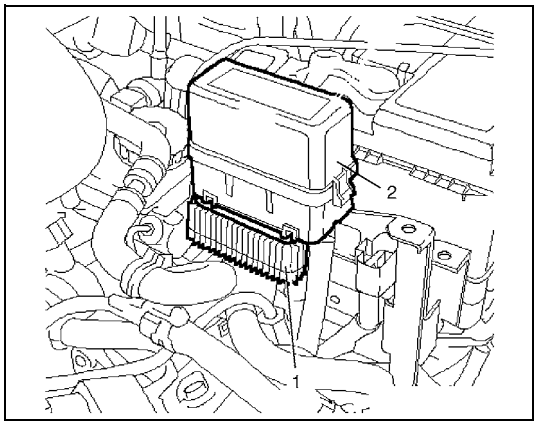

1) Disconnect negative cable at battery.
2) Detach relay box (2) from bracket.
3) Remove glow controller (1) from bracket.
4) Disconnect connector from glow controller.

Installation

Reverse removal procedure for installation.

EGR System

EGR valve assembly component

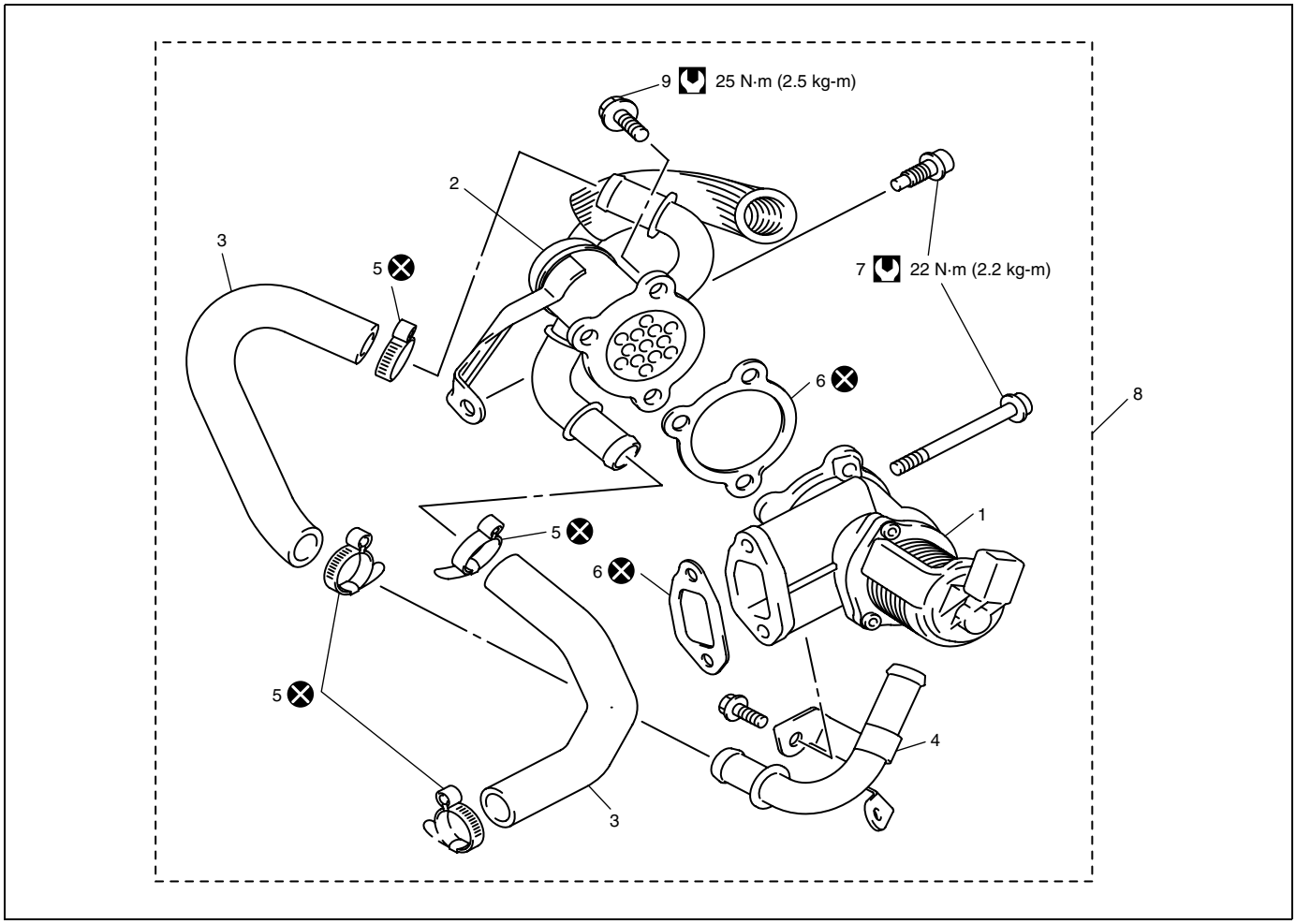

1. EGR valve	4. EGR cooler pipe	7. EGR valve assembly mounting bolt	: Tightening torque
2. EGR cooler	5. Clamp	8. EGR valve assembly	: Do not reuse
3. EGR cooler hose	6. Gasket	9. EGR cooler bolt	

EGR valve assembly removal and installation

Removal

1) Disconnect negative cable at battery.
2) Drain cooling system.
3) Remove air cleaner assembly referring to “Air Cleaner Assembly Removal and Installation” in Section 6A3.
4) Remove intercooler outlet No.2 hose referring to “Inter Cooler Components” in Section 6A3.
5) Remove air intake joint referring to “Intake Manifold Removal and Installation” in Section 6A3.
6) Disconnect fuel return hose from common rail.

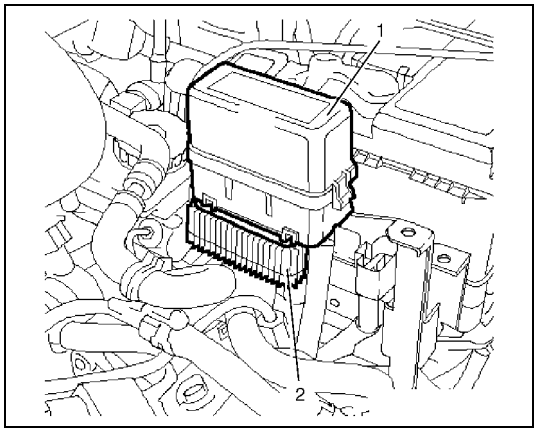

7) Detach relay box (1) and glow controller (2) from bracket.

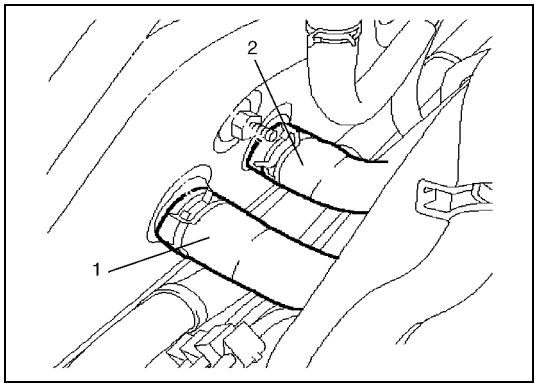

8) Remove heater inlet (1) and outlet No.2 hoses (2) from heater core.

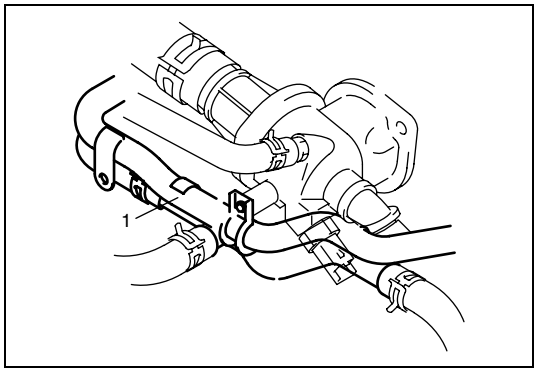

9) Remove heater outlet pipe (1).

10) Disconnect connector from EGR valve.

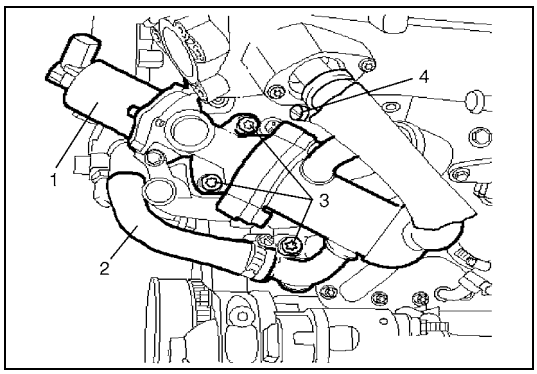

11) Disconnect EGR cooler hose (2) from thermostat housing.
12) Remove EGR valve assembly (1) from cylinder head by removing 3 bolts (3) and clamp (4).

Installation

Reverse removal procedure for installation noting the followings.

- Clean mating surface of EGR valve assembly and cylinder head.
- Use new gaskets.

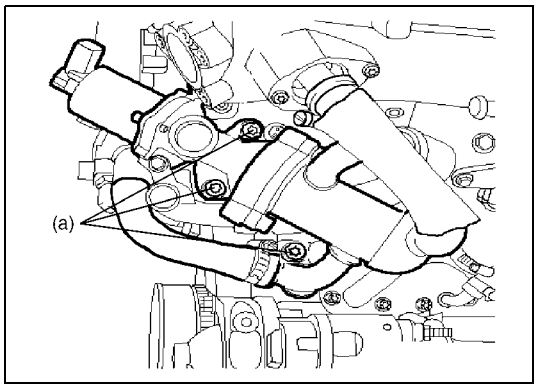

- Tighten EGR valve assembly mounting bolts to specified torque.

Tightening torque
EGR valve assembly mounting bolt
(a): 22 N·m (2.2 kg-m, 16.0 lb-ft)

- Use new cooler hose clamps.
- Install air intake joint referring to “Intake Manifold Removal and Installation” in Section 6A3.
- Install intercooler outlet No.2 hose referring to “Inter Cooler Components” in Section 6A3.
- Install air cleaner assembly referring to “Air Cleaner Assembly Removal and Installation” in Section 6A3.
- Refill cooling system referring to “Cooling System Flush and Refill” in Section 6B3.
- Check cooling system leakage referring to “Cooling System Inspection and Service” in Section 6B3.

Crankcase Ventilation System

Crankcase ventilation system component

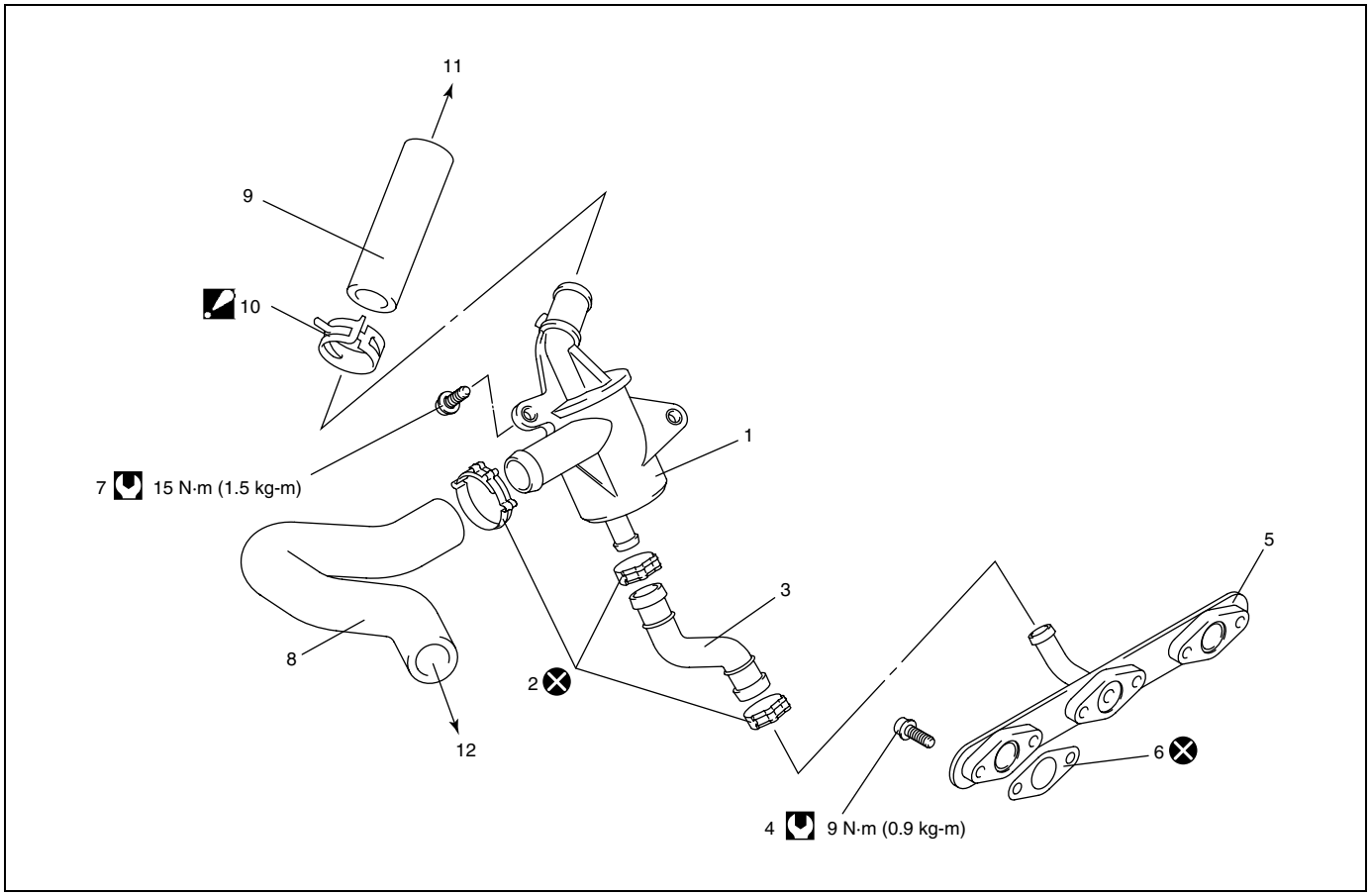

1. Oil separator	6. Gasket	11. To breather pipe
2. Clamp	7. Oil separator mounting bolt	12. To connector
3. Ventilation hose No.1	8. Ventilation hose No.2	: Tightening torque
4. Crankcase ventilation cover mounting bolt	9. Breather hose	: Do not reuse.
5. Crankcase ventilation cover	10. Breather hose clip Be sure to position clip in specified direction as shown in figure.	

Oil separator and crankcase ventilation cover removal and installation

Removal

1) Disconnect negative cable at battery.
2) Remove air cleaner assembly referring to “Air Cleaner Assembly Removal and Installation” in Section 6A3.
3) Remove EGR valve assembly referring to “EGR valve assembly removal and installation” in this section.

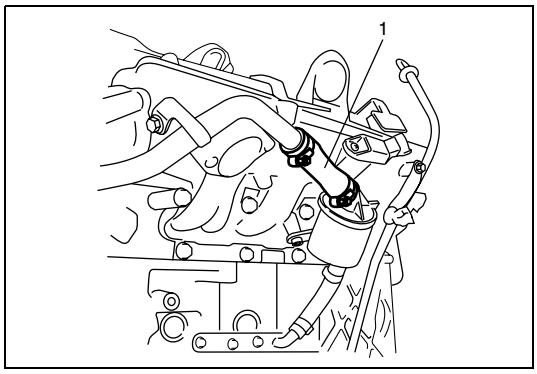

4) Disconnect breather hose (1) from oil separator.
5) Remove generator assembly referring to “Generator Dismounting and Remounting” in Section 6H3.

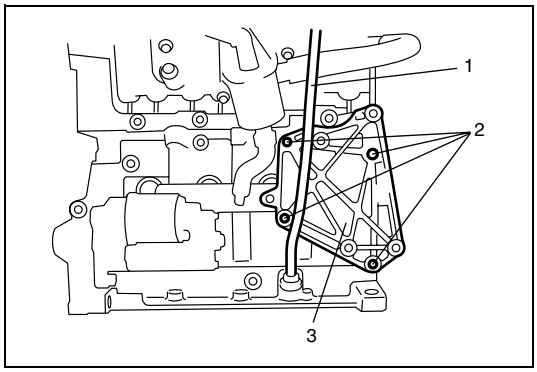

6) Remove oil level gauge guide (1) with oil level gauge.
7) Remove generator bracket (3) from cylinder block by removing generator bracket mounting bolts (2).

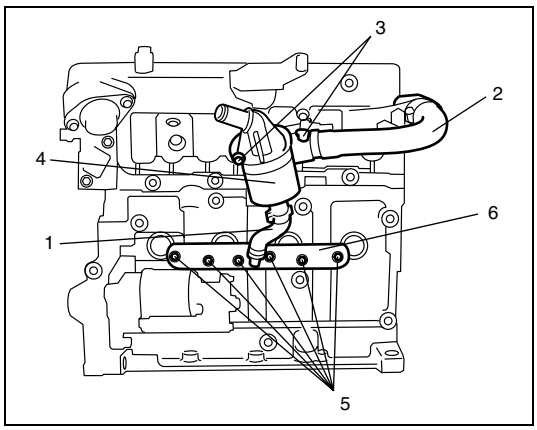

8) Disconnect ventilation hose No.2 (2) from oil separator.
9) Loosen ventilation hose No.1 clamp at oil separator side.
10) Remove oil separator mounting bolts (3).
11) Remove oil separator (4) by disconnecting ventilation hose No.1 (1).
12) Remove crankcase ventilation cover (6) with ventilation hose No.1 by removing crankcase ventilation cover mounting bolts (5).

Installation

Reverse removal procedure for installation noting the followings.

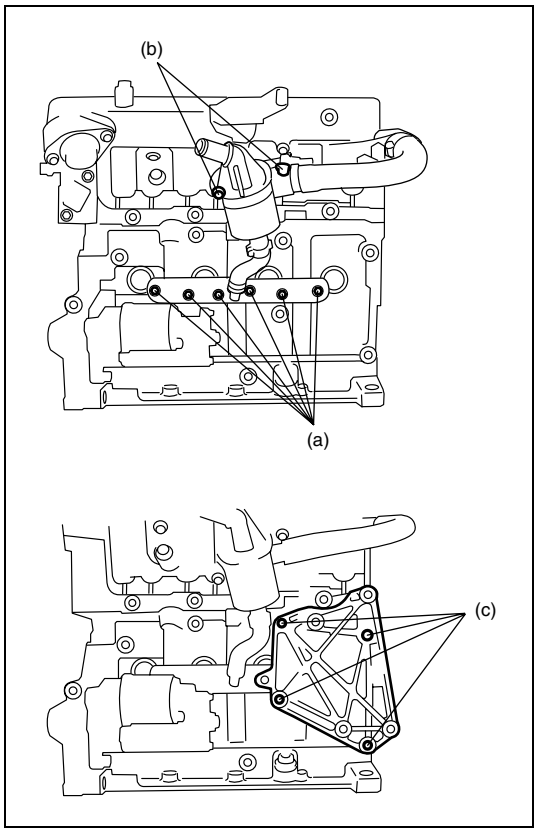

- Clean mating surfaces of crankcase ventilation cover and cylinder block.
- Use new crankcase ventilation cover gaskets and ventilation hose clamps.
- Tighten crankcase ventilation cover mounting bolts, oil separator mounting bolts and generator bracket mounting bolts to specified torque.

Tightening torque
Crankcase ventilation cover mounting bolt
(a): 9 N·m (0.9 kg-m, 6.5 lb-ft)
Oil separator mounting bolt
(b): 15 N·m (1.5 kg-m, 10.8 lb-ft)
Generator bracket mounting bolt
(c): 25 N·m (2.5 kg-m, 18.0 lb-ft)

- Install generator referring to “Generator Dismounting and Remounting” in Section 6H3.
- Install EGR valve assembly referring to “EGR valve assembly removal and installation” in this section.
- Install air cleaner assembly referring to “Air Cleaner Assembly Removal and Installation” in Section 6A3.

Required Service Material

Recommended SUZUKI Material or Specification	Use
Loctite omnifit 100M spezial	• To apply to thread part of ECT sensor.

Tightening Torque Specification

Fastening part	Tightening torque		
	N•m	kg-m	lb-ft
Vacuum pump bolt	5 N·m (0.5 kg-m, 4.0 lb-ft) and then 20 N·m (2.0 kg-m, 14.5 lb-ft)		
Glow plug	10	1.0	7.5
Fuel injector bracket bolt	20	2.0	14.5
High pressure pipe union nut (fuel injector side)	24	2.4	17.5
High pressure pipe union nut (common rail side)	28	2.8	20.5
Common rail bolt	25	2.5	18.0
High pressure supply pipe union nut (fuel injector side)	24	2.4	17.5
High pressure supply pipe union nut (common rail side)	28	2.8	20.5
Injection pump bolt	15	1.5	11.0
Accelerator pedal mounting nut	9	0.9	6.5
Fuel pressure sensor	9	0.9	6.5
Fuel pressure regulator bolt	70	7.0	50.5
ECT sensor	34	3.4	24.5
CMP sensor bolt	7	0.7	5.0
CKP sensor bolt	9	0.9	6.5
Boost pressure sensor bolt	9	0.9	6.5
EGR valve assembly mounting bolt	22	2.2	16.0
Crankcase ventilation cover mounting bolt	9	0.9	6.5
Oil separator mounting bolt	15	1.5	10.8
Generator bracket mounting bolt	25	2.5	18.0
EGR cooler bolt	25	2.5	18.0

Special Tool

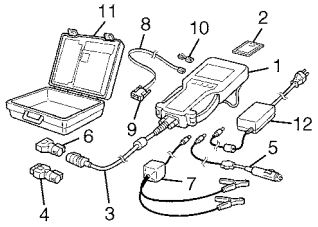 Tech 2 kit (SUZUKI scan tool) (See NOTE)	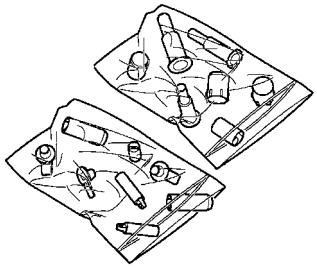 09914-65420 Plug cap for fuel system (OUT0000173/9780)	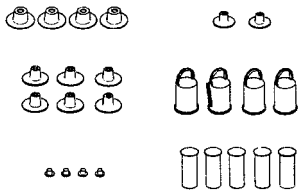 09916-50010 Fuel system, plug set (OUT0000149)	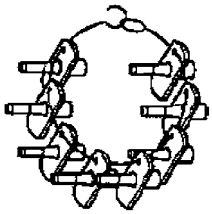 09919-48320 Plug kit (KM-807)
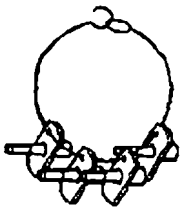 09919-48310 Plug kit (KM-6015)	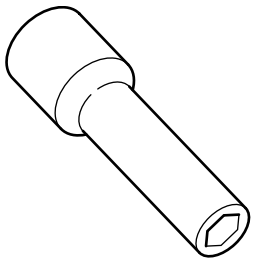 09911-78610 Glowplug wrench		

NOTE:

This kit includes the following items.

1. Tech 2, 2. PCMCIA card, 3. DLC cable, 4. SAE 16/19 adapter, 5. Cigarette cable, 6. DLC loopback adapter, 7. Battery power cable, 8. RS232 cable, 9. RS232 adapter, 10. RS232 loopback connector, 11. Storage case, 12. Power supply

SECTION 6G3

CRANKING SYSTEM (Z13DT ENGINE)

WARNING:

For vehicles equipped with a Supplemental Restraint (Air Bag) System:

- **Service on and around the air bag system components or wiring must be performed only by an authorized SUZUKI dealer. Refer to "System Components and Wiring Location View and Connections" under "General Description" in Section 10B in order to confirm whether you are performing service on or near the air bag system components or wiring. Please observe all WARNINGS and "Service Precautions" under "On-Vehicle Service" in Section 10B before performing service on or around the air bag system components or wiring. Failure to follow WARNINGS could result in unintentional activation of the system or could render the system inoperative. Either of these two conditions may result in severe injury.**
- **Technical service work must be started at least 90 seconds after the ignition switch is turned to the "LOCK" position and the negative cable is disconnected from the battery. Otherwise, the system may be activated by reserve energy in the Sensing and Diagnostic Module (SDM).**

CONTENTS

General Description 6G3-2
Cranking System Circuit Diagram 6G3-2
Diagnosis 6G3-2
Cranking System Symptom Diagnosis 6G3-2
Cranking System Test 6G3-4
Pull-in test 6G3-4
Hold-in test 6G3-4
Plunger and pinion return test 6G3-4
No-load performance test 6G3-5
ON-Vehicle Service 6G3-6
Starting Motor Dismounting and Remounting 6G3-6
Dismounting 6G3-6
Remounting 6G3-6
Tightening Torque Specification 6G3-6

General Description

Cranking System Circuit Diagram

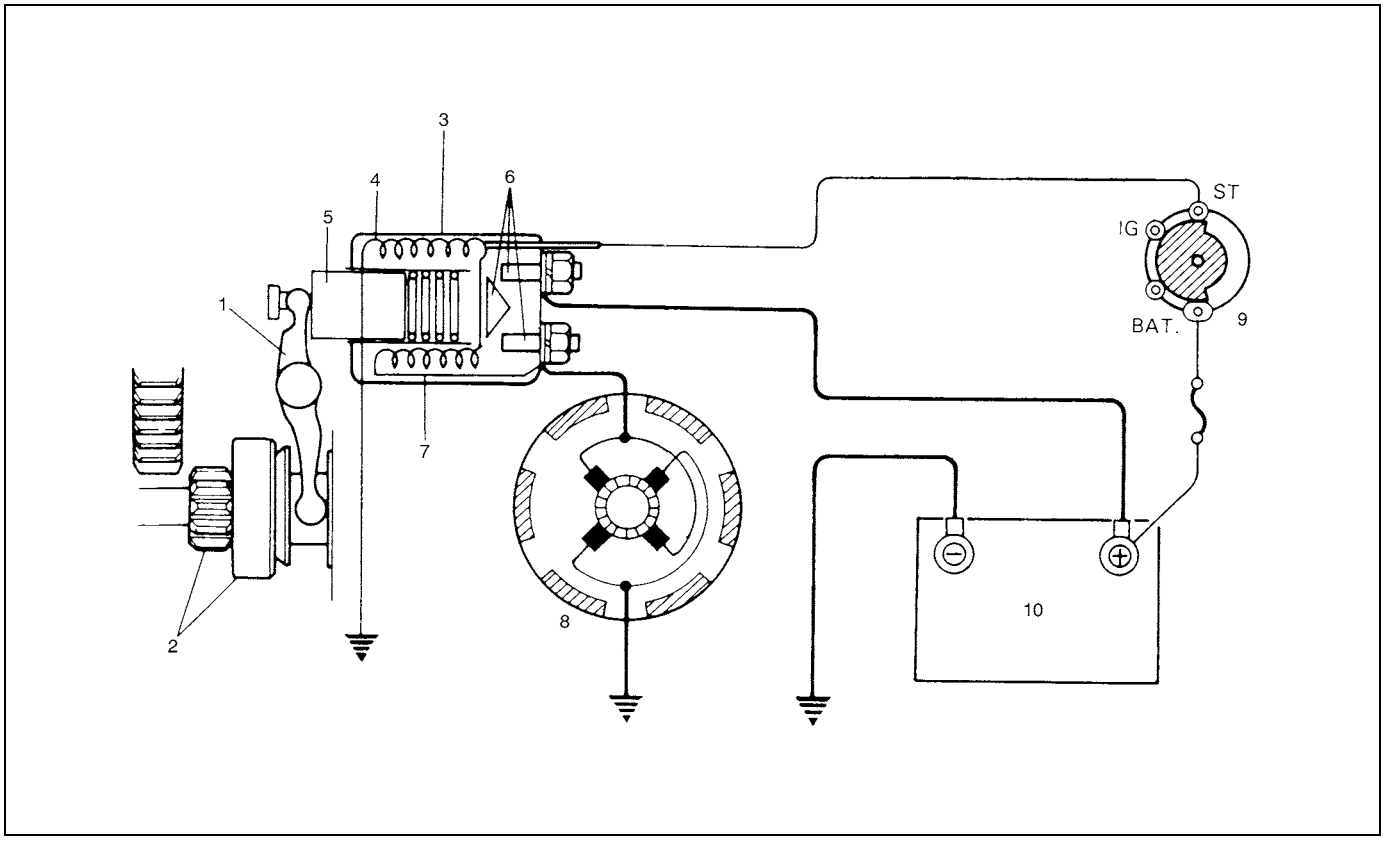

1. Pinion drive lever	5. Plunger	9. Ignition & Starter switch
2. Pinion & Over-running clutch	6. Magnetic switch contacts	10. Battery
3. Magnetic switch	7. Pull-in coil	
4. Hold-in coil	8. Starting motor	

Diagnosis

Cranking System Symptom Diagnosis

Possible symptoms due to starting system trouble would be as follows:

- Starting motor does not run (or runs slowly)
- Starting motor runs but fails to crank engine
- Abnormal noise is heard

Proper diagnosis must be made to determine exactly where the cause of each trouble lies.....in battery, wiring harness, (including starting motor switch), starting motor or engine.

Do not remove motor just because starting motor does not run. Check following items and narrow down scope of possible causes.

1) Condition of trouble
2) Tightness of battery terminals (including ground cable connection on engine side) and starting motor terminals
3) Discharge of battery
4) Mounting of starting motor

Condition	Possible Cause	Correction
Motor not running (No operating sound of magnetic switch)	Battery run down	Recharge battery.
	Battery voltage too low due to battery deterioration	Replace battery.
	Poor contact in battery terminal connection	Retighten or replace.
	Loose grounding cable connection	Retighten.
	Fuse set loose or blown off	Tighten or replace.
	Poor contacting action of ignition switch and magnetic switch	Replace.
	Lead wire coupler loose in place	Retighten.
	Open-circuit between ignition switch and magnetic switch	Repair.
	Open-circuit in pull-in coil	Replace starting motor.
	Brushes are seating poorly or worn down	Replace starting motor.
	Poor sliding of plunger and/or pinion	Replace starting motor.
Motor not running (Operating sound of magnetic switch heard)	Battery run down	Recharge battery.
	Battery voltage too low due to battery deterioration	Replace battery.
	Loose battery cable connections	Retighten.
	Burnt main contact point, or poor contacting action of magnetic switch	Replace starting motor.
	Brushes are seating poorly or worn down	Replace starting motor.
	Weakened brush spring	Replace starting motor.
	Burnt commutator	Replace starting motor.
	Layer short-circuit of armature	Replace starting motor.
	Crankshaft rotation obstructed	Repair.
Starting motor running but too slow (small torque) (If battery and wiring are satisfactory, inspect starting motor)	Insufficient contact of magnetic switch main contacts	Replace starting motor.
	Layer short-circuit of armature	Replace starting motor.
	Disconnected, burnt or worn commutator	Replace starting motor.
	Worn brushes	Replace starting motor.
	Weakened brush springs	Replace starting motor.
	Burnt or abnormally worn end bush	Replace starting motor.
Starting motor running, but not cranking engine	Worn pinion tip	Replace starting motor.
	Poor sliding of over-running clutch	Replace starting motor.
	Over-running clutch slipping	Replace starting motor.
	Worn teeth of ring gear	Replace flywheel.
Noise	Abnormally worn bush	Replace starting motor.
	Worn pinion or worn teeth of ring gear	Replace starting motor or flyweel.
	Poor sliding of pinion (failure in return movement)	Replace starting motor.
	Worn internal or planetary gear teeth	Replace starting motor.
	Lack of oil in each part	Replace starting motor.
Starting motor does not stop running	Fused contact points of magnetic switch	Replace starting motor.
	Short-circuit between turns of magnetic switch coil (layer short-circuit)	Replace starting motor.
	Failure of returning action in ignition switch	Replace.

Cranking System Test

CAUTION:
Each test must be performed within 3 – 5 seconds to avoid coil from burning.

Pull-in test

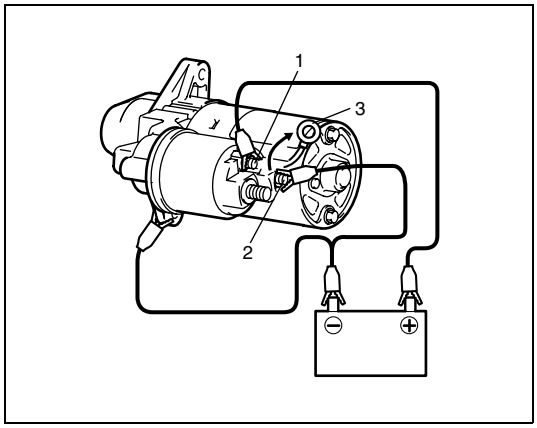

Connect battery to magnetic switch as shown.
Check that plunger and pinion move outward.
If plunger and pinion don't move, replace starting motor.

NOTE:
Before testing, disconnect lead wire (3) from terminal M (2).

1. Terminal "S"

Hold-in test

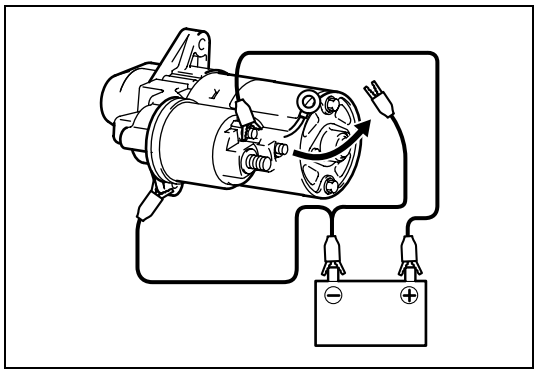

While connected as above with plunger out, disconnect negative lead from terminal "M".
Check that plunger and pinion remain out.
If plunger and pinion return inward, replace starting motor.

Plunger and pinion return test

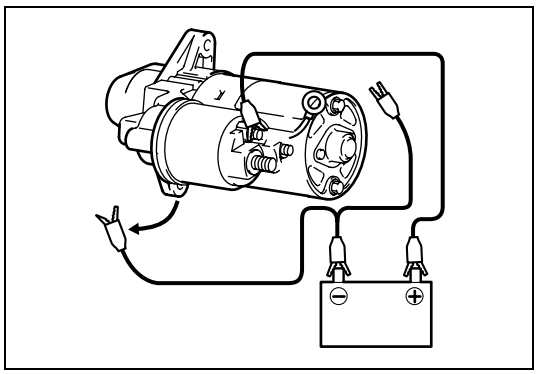

Disconnect negative lead from starting motor body.
Check that plunger and pinion return inward.
If plunger and pinion don't return, replace starting motor.

No-load performance test

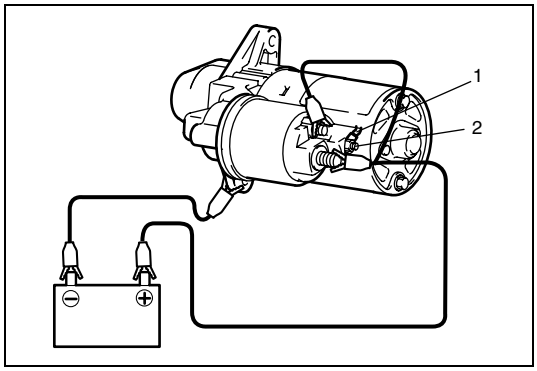

Connect lead wire (1) to terminal M (2).
Connect battery to starting motor as shown.
Check that starting motor rotates smoothly and steadily with pinion moving out.
If check result is not satisfactory, replace starting motor.

ON-Vehicle Service

Starting Motor Dismounting and Remounting

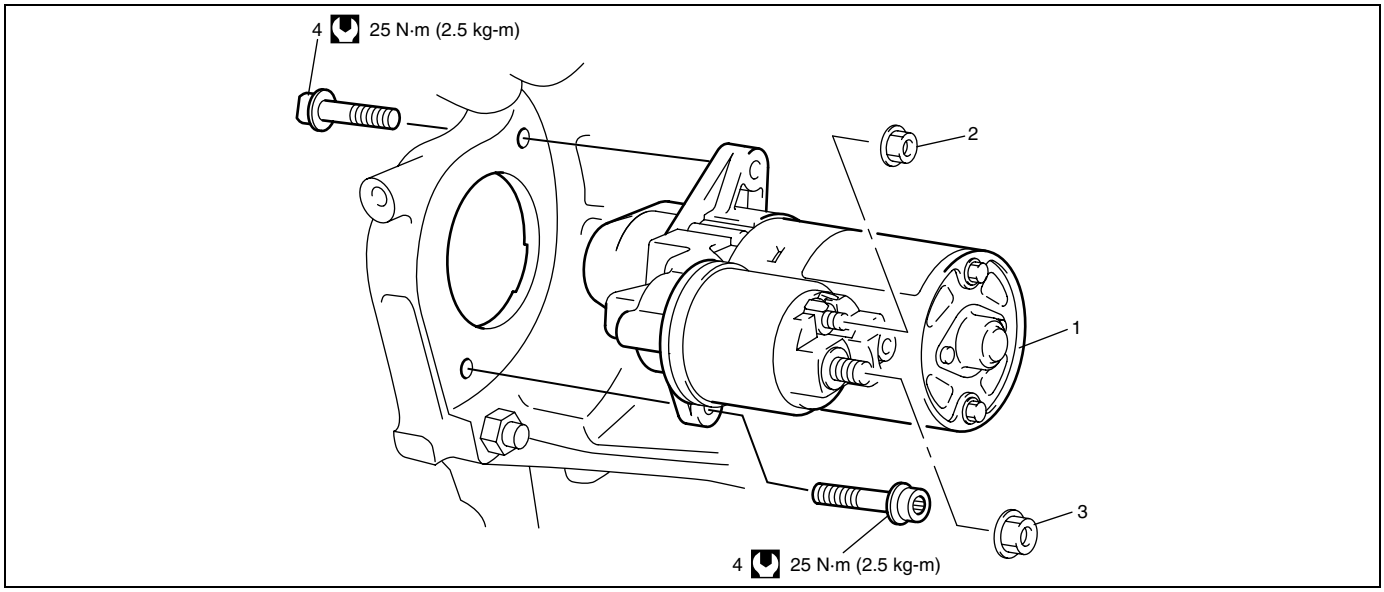

1. Starting motor	3. Battery cable nut	Tightening torque
2. Magnetic switch lead wire nut	4. Starting motor mount bolt	

Dismounting

1) Disconnect negative cable at battery.
2) Remove battery and battery tray, if necessary.
3) Pull out the rubber lid from transmission case for removing starting motor mount bolt.
4) Remove starting motor mount bolt (upper side).

NOTE:

Make sure that starting motor mount bolt (upper side) does not fall into transmission case.

5) Disconnect magnetic switch lead wire and battery cable from starting motor terminals.
6) Remove starting motor mount bolt (lower side).
7) Remove starting motor.

Remounting

Reverse the dismounting procedure noting the following.

- Make sure that starting motor mount bolt (upper side) does not fall into transmission case.
- Tighten starting motor mount bolts to specified torque.

Tightening torque
Starting motor mount bolt: 25 N·m (2.5 kg-m, 18.0 lb-ft)

Tightening Torque Specification

Fastening part	Tightening torque		
	N•m	kg-m	lb-ft
Starting motor mount bolt	25	2.5	18.0

SECTION 6H3

CHARGING SYSTEM (Z13DT ENGINE)

WARNING:

For vehicles equipped with a Supplemental Restraint (Air Bag) System:

- **Service on and around the air bag system components or wiring must be performed only by an authorized SUZUKI dealer. Refer to "System Components and Wiring Location View and Connectors" under "General Description" in Section 10B in order to confirm whether you are performing service on or near the air bag system components or wiring. Please observe all WARNINGS and "Service Precautions" under "On-Vehicle Service" in Section 10B before performing service on or around the air bag system components or wiring. Failure to follow WARNINGS could result in unintentional activation of the system or could render the system inoperative. Either of these two conditions may result in severe injury.**
- **Technical service work must be started at least 90 seconds after the ignition switch is turned to the "LOCK" position and the negative cable is disconnected from the battery. Otherwise, the system may be activated by reserve energy in the Sensing and Diagnostic Module (SDM).**

CONTENTS

General Description 6H3-2
- Battery Description 6H3-2
  - Carrier and hold-down 6H3-2
  - Electrolyte freezing 6H3-2
  - Sulfation 6H3-2
  - Built-in indicator (if equipped) 6H3-2
  - Care of battery 6H3-3
- Generator Description 6H3-4

Diagnosis 6H3-5
- Battery Inspection 6H3-5
  - Visual inspection 6H3-5
- Generator Symptom Diagnosis 6H3-5
  - Charging indicator lamp operation 6H3-5
  - Undercharged battery 6H3-6

On-Vehicle Service 6H3-7
- Jump Starting in Case of Emergency 6H3-7
  - With auxiliary (booster) battery 6H3-7
  - With charging equipment 6H3-7
- Battery Dismounting and Remounting 6H3-8
  - Dismounting 6H3-8
  - Handling 6H3-8
  - Remounting 6H3-8
- Generator belt Inspection 6H3-8
- Generator Dismounting and Remounting ... 6H3-9

Specification 6H3-10
- Battery 6H3-10
- Generator 6H3-10

Tightening Torque Specification 6H3-10

General Description

Battery Description

The battery has three major functions in the electrical system.

- It is a source of electrical energy for cranking the engine.
- It acts as a voltage stabilizer for the electrical system.
- It can, for a limited time, provide energy when the electrical load exceeds the output of the generator.

Carrier and hold-down

The battery carrier should be in good condition so that it will support the battery securely and keep it level.
Before installing the battery, the battery carrier and hold-down clamp should be clean and free from corrosion and make certain there are no parts in carrier.
To prevent the battery from shaking in its carrier, the hold-down bolts should be tight enough but not over-tightened.

Electrolyte freezing

The freezing point of electrolyte depends on its specific gravity. Since freezing may ruin a battery, it should be protected against freezing by keeping it in a fully charged condition. If a battery is frozen accidentally, it should not be charged until it is warmed.

Sulfation

If the battery is allowed to stand for a long period in discharged condition, the lead sulfate becomes converted into a hard, crystalline substance, which will not easily turn back to the active material again during the subsequent recharging. “Sulfation” means the result as well as the process of that reaction. Such a battery can be revived by very slow charging and may be restored to usable condition but its capacity is lower than before.

Built-in indicator (if equipped)

The battery has a built-in temperature compensated indicator at the top of the battery. This indicator is to be used with the following diagnostic procedure. When checking the indicator, make sure that the battery has a clean top. A light may be needed in some poorly-lit areas.

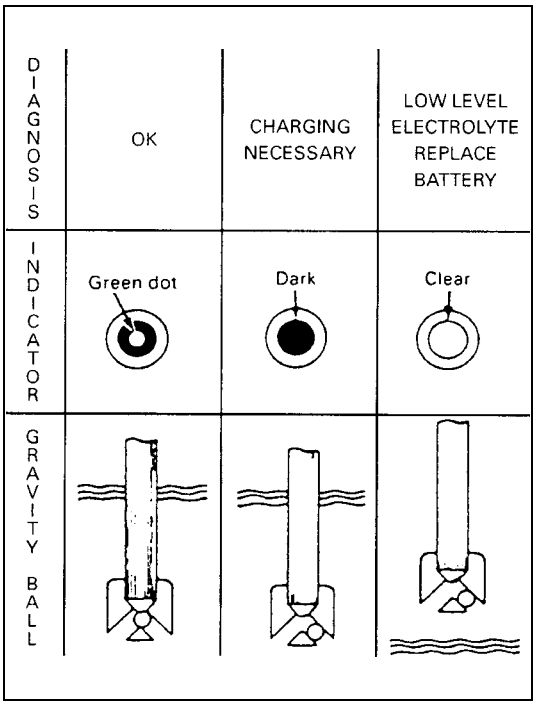

Three types of indication available under normal operation are as follows.

- Green Dot
  Battery is sufficiently charged for testing.
- Dark
  Battery must be charged before testing.
  If there is a cranking complaint, battery should be tested as described in “Diagnosis” section. Charging and electrical systems should also be checked at this time.
- Clear or Light Yellow
  This means that fluid level is below the bottom of hydrometer. Its possible cause is excessive or prolonged charging, a broken case, excessive tipping or normal battery deterioration. When the battery is found in such condition, it is possible that high charging voltage is caused by the faulty charging system and therefore, charging and electrical systems need to be checked. If there is a trouble in cranking and its cause lies in the battery, it should be replaced.

Care of battery

WARNING:

- **Never expose battery to open flame or electric spark because of battery generate gas which is flammable and explosive.**
- **Do not allow battery fluid to contact eyes, skin, fabrics, or painted surfaces as fluid is a corrosive acid. Flush any contacted area with water immediately and thoroughly.**
- **Batteries should always be kept out of reach of children.**

1) The battery is a very reliable component, but needs periodical attentions.
   - Keep the battery carrier clean
   - Prevent rust formation on the terminal posts
   - Keep the electrolyte up to the upper level uniformly in all cells.
   - When keeping battery on vehicle over a long period of time, follow instructions given below.
     – Weekly, start the engine and run it until it reaches normal operating temperature with engine speed of 2000 to 3000 rpm. Make sure all electric switches are off before storing the vehicle.
     – Recharge the battery twice a month to prevent it from discharging excessively. This is especially important when ambient temperature is low.
     The battery discharges even when it is not used, while vehicles are being stored. Battery electrolyte can freeze and battery case can crack at cold ambient condition if battery is not properly charged.
2) Keep the battery cable connections clean.
   The cable connections, particularly at the positive (+) terminal post, tend to become corroded. The product of corrosion, or rust, on the mating faces of conductors resists the flow of current.
   Clean the terminals and fittings periodically to ensure good metal-to-metal contact, and grease the connections after each cleaning to protect them against rusting.
3) Be always in the know as to the state of charge of the battery. The simplest way to tell the state of charge is to carry out a hydrometer test. The hydrometer is an instrument for measuring the specific gravity (S.G.) of the battery electrolyte. The S.G. of the electrolyte is indicative of the state of charge.

Generator Description

The generator is a small and high performance type with an IC regulator incorporated.
The internal components are connected electrically as shown below figure.

The generator features are as follows:

- Solid state regulator is mounted inside the generator.
- All regulator components are enclosed into a solid mold.
- This unit along with the brush holder assembly is attached to the rear housing.
- The IC regulator uses integrated circuits and controls the voltage produced by the generator, and the voltage setting cannot be adjusted.
- The generator rotor bearings contain enough grease to eliminate the need for periodic lubrication. Two brushes carry current through the two slip rings to the field coil mounted on the rotor, and under normal conditions will provide long period of attention-free service.
- The stator windings are assembled on the inside of a laminated core that forms part of the generator frame.

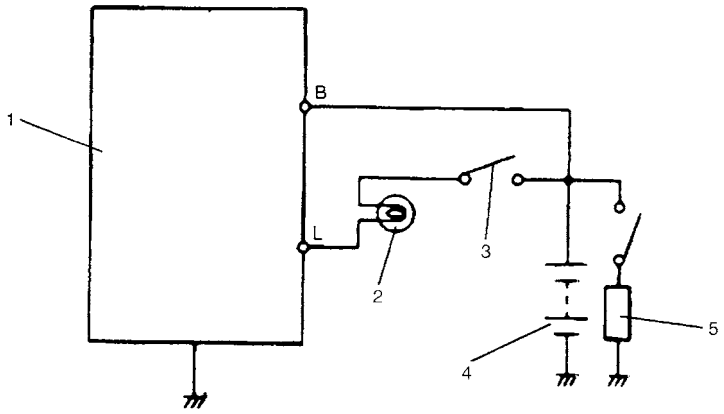

1. Generator with regulator assembly	3. Ignition switch	5. Load
2. Charge indicator light	4. Battery	

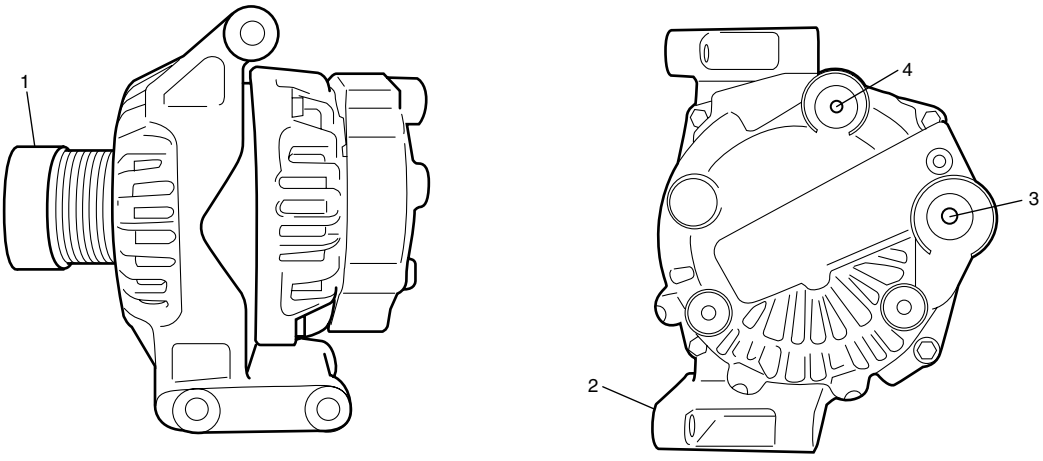

1. Pulley	3. “B” terminal
2. Ground	4. “L” terminal

Diagnosis

Battery Inspection

Visual inspection

Check for obvious damage, such as cracked or broken case or cover, that could permit loss of electrolyte. If obvious damage is noted, replace battery. Determine cause of damage and correct as needed.

Generator Symptom Diagnosis

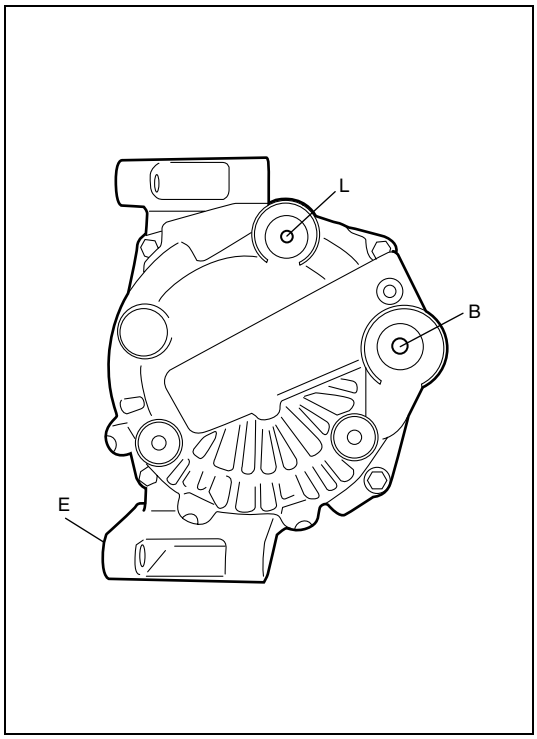

CAUTION:

- **Do not connect any load between L and E.**
- **When connecting charger or booster battery to vehicle battery, refer to "Jump Starting in Case of Emergency" in this section.**

Trouble in charging system will show up as one or more of the following conditions:

1) Faulty indicator lamp operation.
2) An undercharged battery as evidenced by slow cranking or indicator dark.
3) An overcharged battery as evidenced by excessive spewing of electrolyte from vents.

Noise from generator may be caused by loose drive pulley, loose mounting bolts, worn or dirty bearings, defective diode, or defective stator.

B: Generator output (Battery terminal)
E: Ground
L: Lamp terminal

Charging indicator lamp operation

Condition	Possible Cause	Correction
Charge light does not light with ignition ON and engine off	Fuse blown	Check fuse.
	Indicator lamp (LED) faulty for RM413D	Replace combination meter.
	Light burned out for RB413D	Replace light.
	Wiring connection loose	Tighten loose connection.
	IC regulator or field coil faulty	Replace generator.
Charge light does not go out with engine running (battery requires frequent recharging)	Drive belt loose or worn	Adjust or replace drive belt.
	IC regulator or generator faulty	Check charging system.
	Wiring faulty	Repair wiring.
Noise from radio	Condenser faulty	Replace generator.

Undercharged battery

This condition, as evidenced by slow cranking or low specific gravity can be caused by one or more of the following conditions even though indicator lamp may be operating normal.

Following procedure also applies to cars with voltmeter and ammeter.

- Make sure that undercharged condition has not been caused by accessories left on for extended period of time.
- Check drive belt for proper tension.
- If battery defect is suspected, refer to “Battery Description” in this section.
- Inspect wiring for defects. Check all connections for tightness and cleanliness, battery cable connections at battery, starting motor and ignition ground cable.

On-Vehicle Service

Jump Starting in Case of Emergency

With auxiliary (booster) battery

CAUTION:

If vehicle is manual transmission model and has a catalytic converter, do not push or tow it to start. Damage to its emission system and/or to other parts may result.

Both booster and discharged battery should be treated carefully when using jumper cables. Follow procedure outlined below, being careful not to cause sparks.

WARNING:

- **Departure from these conditions or procedure described below could result in:**
  - **Serious personal injury (particularly to eyes) or property damage from such causes as battery explosion, battery acid, or electrical burns.**
  - **Damage to electronic components of either vehicle.**
- **Remove rings, watches, and other jewelry. Wear approved eye protection.**
- **Be careful so that metal tools or jumper cables do not contact positive battery terminal (or metal in contact with it) and any other metal on vehicle, because a short circuit could occur.**

WARNING:

Do not connect negative cable directly to negative terminal of dead battery.

1) Set parking brake and place NEUTRAL on manual transmission. Turn off ignition, turn off lights and all other electrical loads.
2) Check electrolyte level. If it is below low level line, add distilled water.
3) Attach end of one jumper cable to positive terminal of booster battery and the other end of the same cable to positive terminal of discharged battery. (Use 12-volt battery only to jump start engine).
4) Attach one end of the remaining negative cable to negative terminal of booster battery, and the other end to a solid engine ground (such as exhaust manifold) at least 45 cm (18 in.) away from battery of vehicle being started.
5) Start engine of vehicle with booster battery and turn off electrical accessories. Then Start engine of the vehicle with discharged battery.
6) Disconnect jumper cables in the exact reverse order.

With charging equipment

CAUTION:

When jump starting engine with charging equipment, be sure equipment used is 12-volt and negative ground. Do not use 24-volt charging equipment. Using such equipment can cause serious damage to electrical system or electronic parts.

Battery Dismounting and Remounting

Dismounting

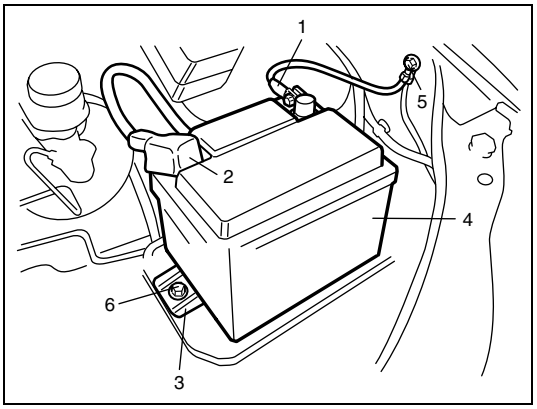

1) Disconnect negative cable (1).
2) Disconnect positive cable (2).
3) Remove retainer (3).
4) Remove battery (4).

5.	Body ground bolt
6.	Retainer bolt

Handling

When handling battery, following safety precautions should be followed:

- Hydrogen gas is produced by battery. A flame or spark near battery may cause the gas to ignite.
- Battery fluid is highly acidic. Avoid spilling on clothing or other fabric. Any spilled electrolyte should be flushed with large quantity of water and cleaned immediately.

Remounting

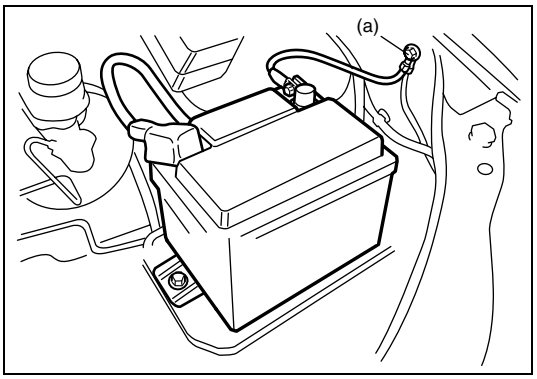

1) Reverse removal procedure.
2) Torque battery cables to specification.

NOTE:

Check to be sure that ground cable has enough clearance to hood panel by terminal.

Tightening torque
Body ground bolt (a): 8.0 N·m (0.8 kg-m, 6.0 lb-ft)

Generator belt Inspection

For removal, installation and inspection referring to “Water Pump / Generator Drive Belt Removal and Installation” and “Water Pump / Generator Drive Belt Tension Inspection” in Section 6B3.

Generator Dismounting and Remounting

1) Disconnect negative cable at battery.
2) Dismount in order as shown in the figure.
3) Reverse dismounting procedure for remounting.

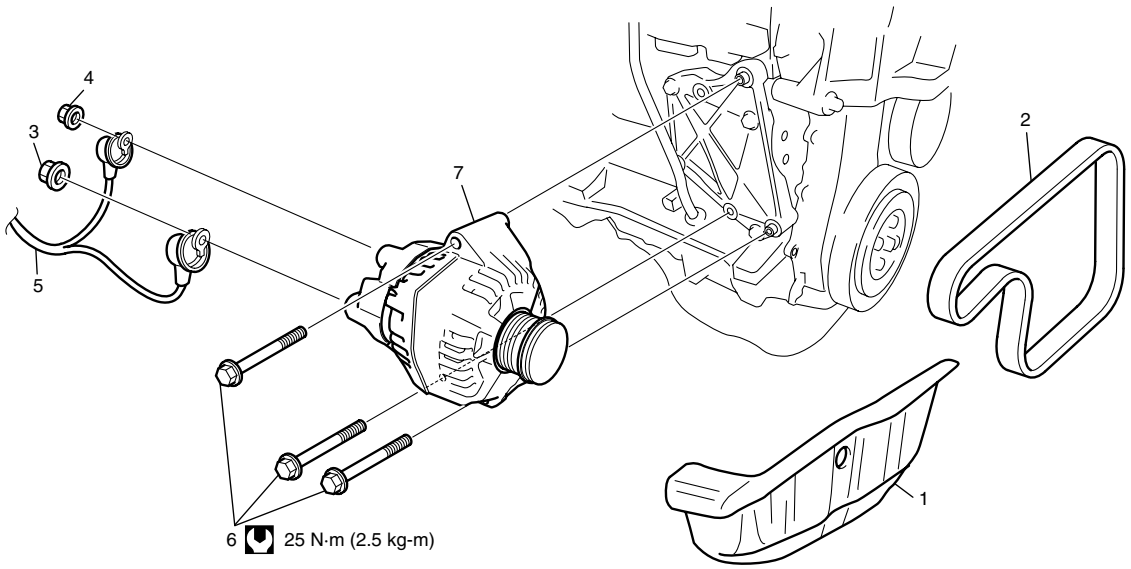

1. Splash cover	3. "B" terminal nut	5. "B" and "L" terminals wire	7. Generator
2. Generator belt	4. "L" terminal nut	6. Generator bolt	Tightening torque

Specification

Battery

Battery type	CCA 370A
Nominal output	12 V
Rated capacity	60 Ah/20 h
	46 Ah/5 h

Generator

Generator Type	90 A type
Rated voltage	12 V
Nominal output	90 A
Polarity	Negative ground
Rotation	Clockwise viewed from pulley side

Tightening Torque Specification

Fastening part	Tightening torque		
	N•m	kg-m	lb-ft
Body ground bolt	8	0.8	6.0
Generator bolt	25	2.5	18.0

SECTION 6K3

EXHAUST SYSTEM (Z13DT ENGINE)

CONTENTS

General Description 6K3-2
Maintenance 6K3-2
On-Vehicle Service 6K3-3
Exhaust System Components 6K3-3
Exhaust Manifold Removal and Installation 6K3-5
Exhaust Manifold Inspection 6K3-5
Catalytic Converter Removal and Installation 6K3-5
Exhaust Pipe Removal and Installation 6K3-5
Tightening Torque Specification 6K3-5

General Description

The exhaust system consists of an exhaust manifold, three-way catalytic converter (TWC), a turbo charger, exhaust pipe, a muffler and seal, gasket and etc.
The three-way catalytic converter is an emission control device added to the exhaust system to lower the levels of Hydrocarbon (HC), Carbon Monoxide (CO), and Oxides of Nitrogen (NOx) pollutants in the exhaust gas.

Maintenance

WARNING:
To avoid the danger of being burned, do not touch the exhaust system when the system is hot. Any service on the exhaust system should be performed when the system is cool.

At every interval of periodic maintenance service, and when vehicle is raised for other service, check exhaust system as follows:

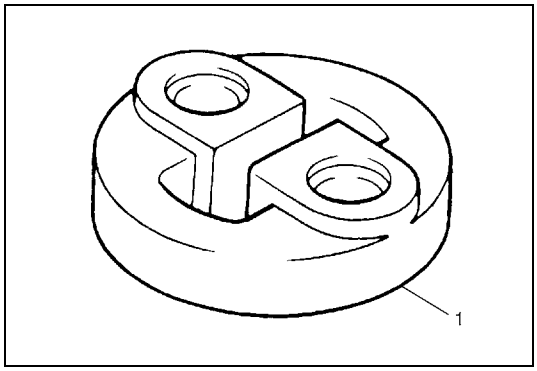

- Check rubber mountings (1) for damage, deterioration, and out of position.
- Check exhaust system for leakage, loose connection, dent and damage.
- If bolts or nuts are loosened, tighten them to specified torque referring to “Exhaust System Components” in this section.
- Check nearby body areas damaged, missing, or mispositioned part, open seam, hole connection or any other defect which could permit exhaust fumes to seep into vehicle.

- Make sure that exhaust system components have enough clearance from underbody to avoid overheating and possible damage to passenger compartment carpet.
- Any defect should be fixed at once.

On-Vehicle Service

Exhaust System Components

WARNING:

To avoid the danger of being burned, do not touch the exhaust system when the system is hot. Any service on the exhaust system should be performed when the system is cool.

For RM413D

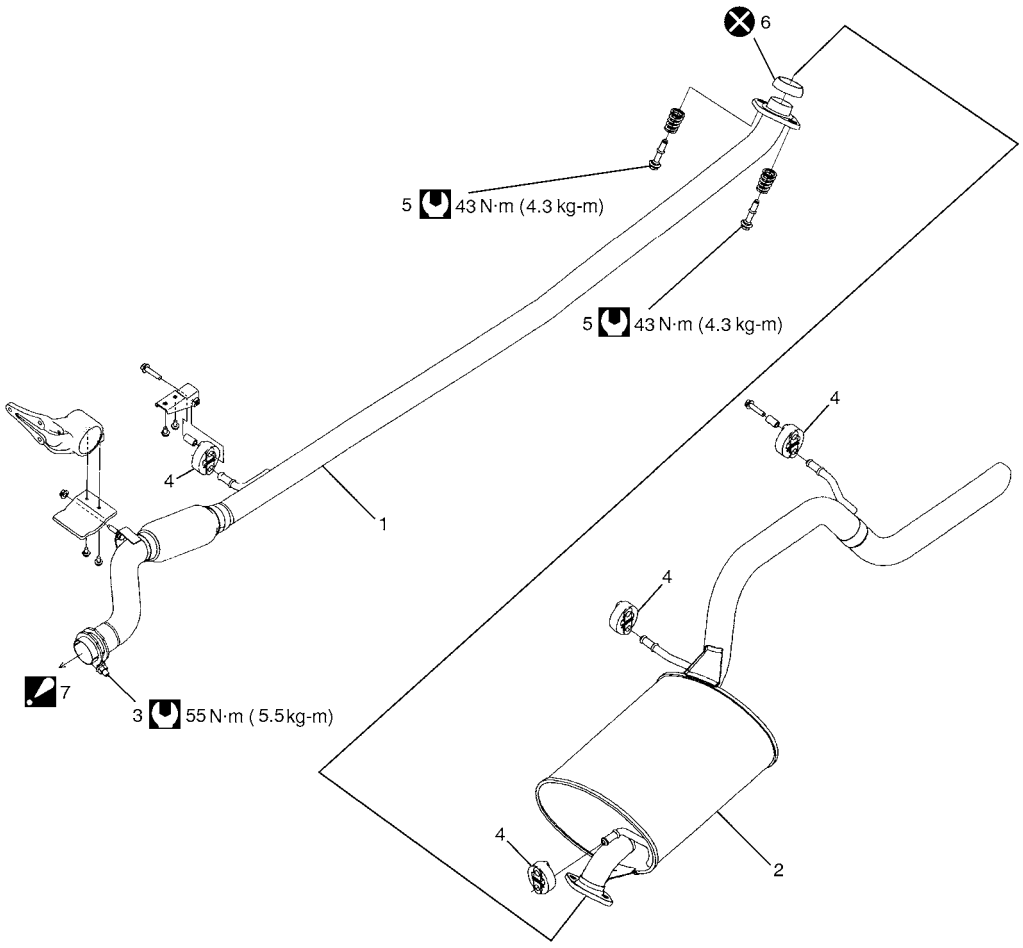

1. Exhaust pipe	4. Mounting	7. To catalytic converter : For detail of service, refer to "Turbocharger Removal and Installation" in Section 6A3.
2. Muffler	5. Exhaust pipe bolt	Tightening torque
3. Clamp bolt	6. Seal ring	Do not reuse.

For RB413D

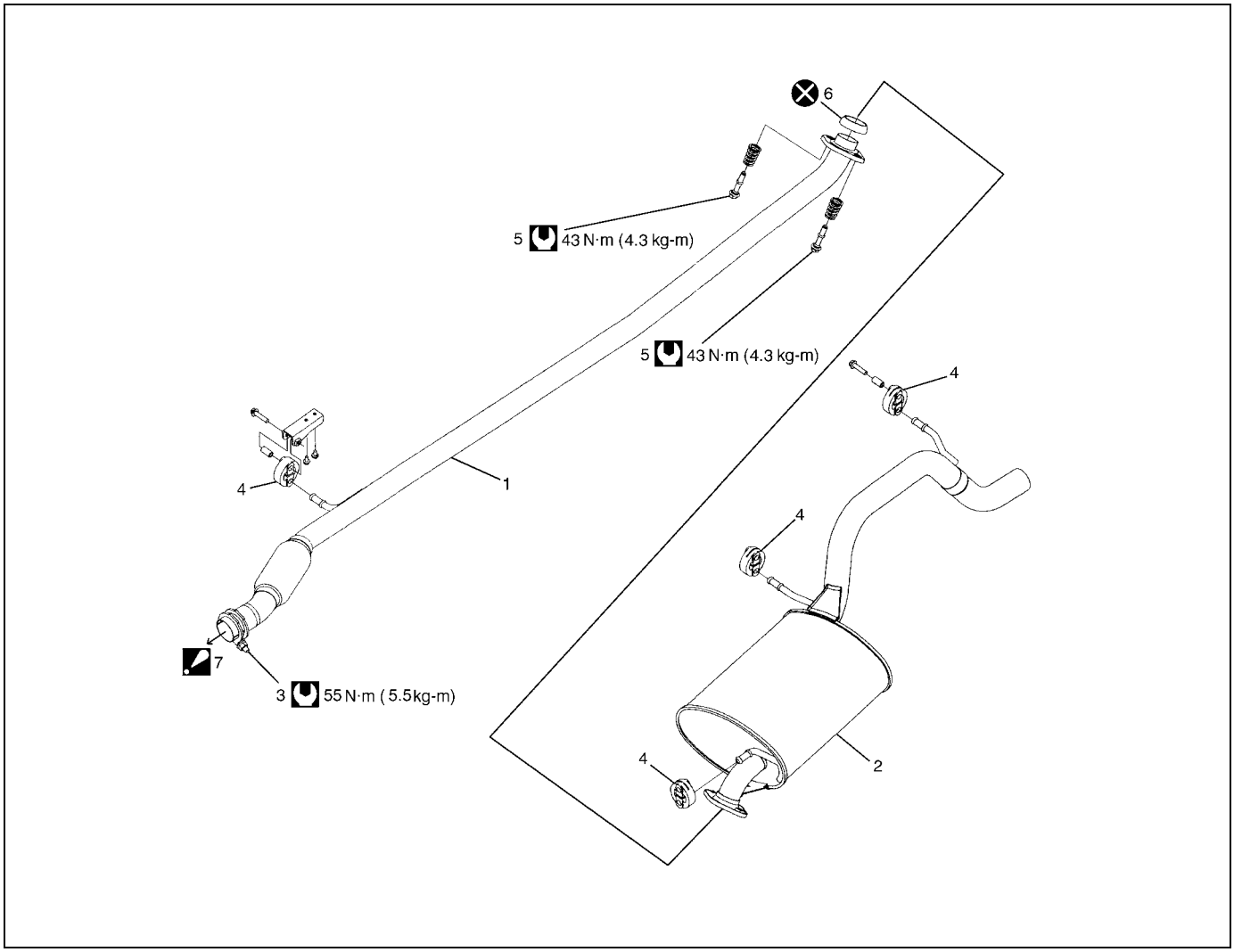

1. Exhaust pipe	4. Mounting	7. To catalytic converter : For detail of service, refer to "Turbocharger Removal and Installation" in Section 6A3.
2. Muffler	5. Exhaust pipe bolt	Tightening torque
3. Clamp bolt	6. Seal ring	Do not reuse.

Exhaust Manifold Removal and Installation

Removal and installation

Refer to “Exhaust Manifold Removal and Installation” in Section 6A3.

Exhaust Manifold Inspection

Check gasket and seal for deterioration or damage.
Replace them as necessary.

Catalytic Converter Removal and Installation

Removal and installation

Refer to “Turbocharger Removal and Installation” in Section 6A3.

Exhaust Pipe Removal and Installation

Removal and installation

For replacement of exhaust pipe, be sure to hoist vehicle and observe “Warning” under “Maintenance” in this section and the following.

CAUTION:

Exhaust manifold have three way catalytic converter in it, it should not be exposed to any impulse. Be careful not to drop it or hit it against something.

- Tighten bolts and nuts to specified torque when reassembling referring to “Exhaust System Components” in this section.
- After installation, start engine and check each joint of exhaust system for leakage.

Tightening Torque Specification

Fastening part	Tightening torque		
	N•m	kg-m	lb-ft
Exhaust No.1 pipe bolts	43	4.3	31.0
Clamp bolt	55	5.5	40.0
Catalytic converter bolt	25	2.5	18.0

SECTION 7A3

MANUAL TRANSAXLE (Z13DT ENGINE MODEL)

WARNING:

For vehicles equipped with a Supplemental Restraint (Air Bag) System:

- **Service on and around the air bag system components or wiring must be performed only by an authorized SUZUKI dealer. Refer to "Air Bag System Components and Wiring Location View" under "General Description" in air bag system section in order to confirm whether you are performing service on or near the air bag system components or wiring. Please observe all WARNINGS and "Service Precautions" under "On-Vehicle Service" in air bag system section before performing service on or around the air bag system components or wiring. Failure to follow WARNINGS could result in unintentional activation of the system or could render the system inoperative. Either of these two conditions may result in severe injury.**
- **Technical service work must be started at least 90 seconds after the ignition switch is turned to the "LOCK" position and the negative cable is disconnected from the battery. Otherwise, the system may be activated by reserve energy in the Sensing and Diagnostic Module (SDM).**

CONTENTS

General Description 7A3-2
- Manual Transaxle Construction and Servicing 7A3-2
- Transaxle 7A3-3

Diagnosis 7A3-4
- Manual Transaxle Symptom Diagnosis 7A3-4

On-Vehicle Service 7A3-5
- Manual Transaxle Oil Change 7A3-5
- Differential Side Oil Seal Replacement 7A3-6
- Gear Shift Control Lever and Cable Components 7A3-7
- Gear Shift Control Lever and Cable Removal and Installation 7A3-8
- Reverse Lamp Switch Removal and Installation 7A3-9
- Reverse Lamp Switch Inspection 7A3-9
- Transaxle Unit Dismounting and Remounting 7A3-10
- Transaxle Unit Components 7A3-13
- Selector Lever Assembly Removal and Installation 7A3-14
- 5th Gears Removal and Installation 7A3-14
- Gear Selector, Cluster Gear and Main Shaft Removal and Installation 7A3-17
- Cluster Gear & Main Shaft Components 7A3-24
- Main Shaft Disassembly and Assembly 7A3-25
- Cluster Gear & Main Shaft Inspection 7A3-28
- Transaxle Case Disassembly and Assembly 7A3-29
- Differential Components 7A3-32
- Differential Disassembly and Assembly 7A3-33
- Differential Adjustment 7A3-35

Tightening Torque Specification 7A3-36

Required Service Material 7A3-36

Special Tool 7A3-37

General Description

Manual Transaxle Construction and Servicing

The transaxle provides five forward speeds and one reverse speed by means of three synchronizers and three shafts-cluster gear (input shaft), main shaft and reverse gear shaft. All forward gears are in constant mesh, and reverse uses a sliding idler gear arrangement.

The 1st and 2nd speed synchronizer is mounted on main shaft and engaged with main shaft 1st gear or 2nd gear, also the 3rd and 4th speed synchronizer is done on main shaft and engaged with main shaft third gear or 4th gear.

The 5th speed synchronizer on main shaft is engaged with cluster 5th gear mounted on the cluster gear (input shaft).

The double cone synchronizing mechanism are provided to 1st and 2nd gear synchromesh device for high performance of shifting to 1st and 2nd gear.

The main shaft turns the final gear and differential assembly, thereby turning the front drive shafts which are attached to the front wheels.

For servicing, it is necessary to use genuine sealant or its equivalent on mating surfaces of transaxle case which is made of aluminum. The case fastening bolts must be tightened to specified torque by means of torque wrench. It is also important that all parts are thoroughly cleaned with cleaning fluid and air dried before reassembling.

New synchronizer rings are prohibited from being lapped with respective gear cones by using lapping compound before they are assembled.

Transaxle

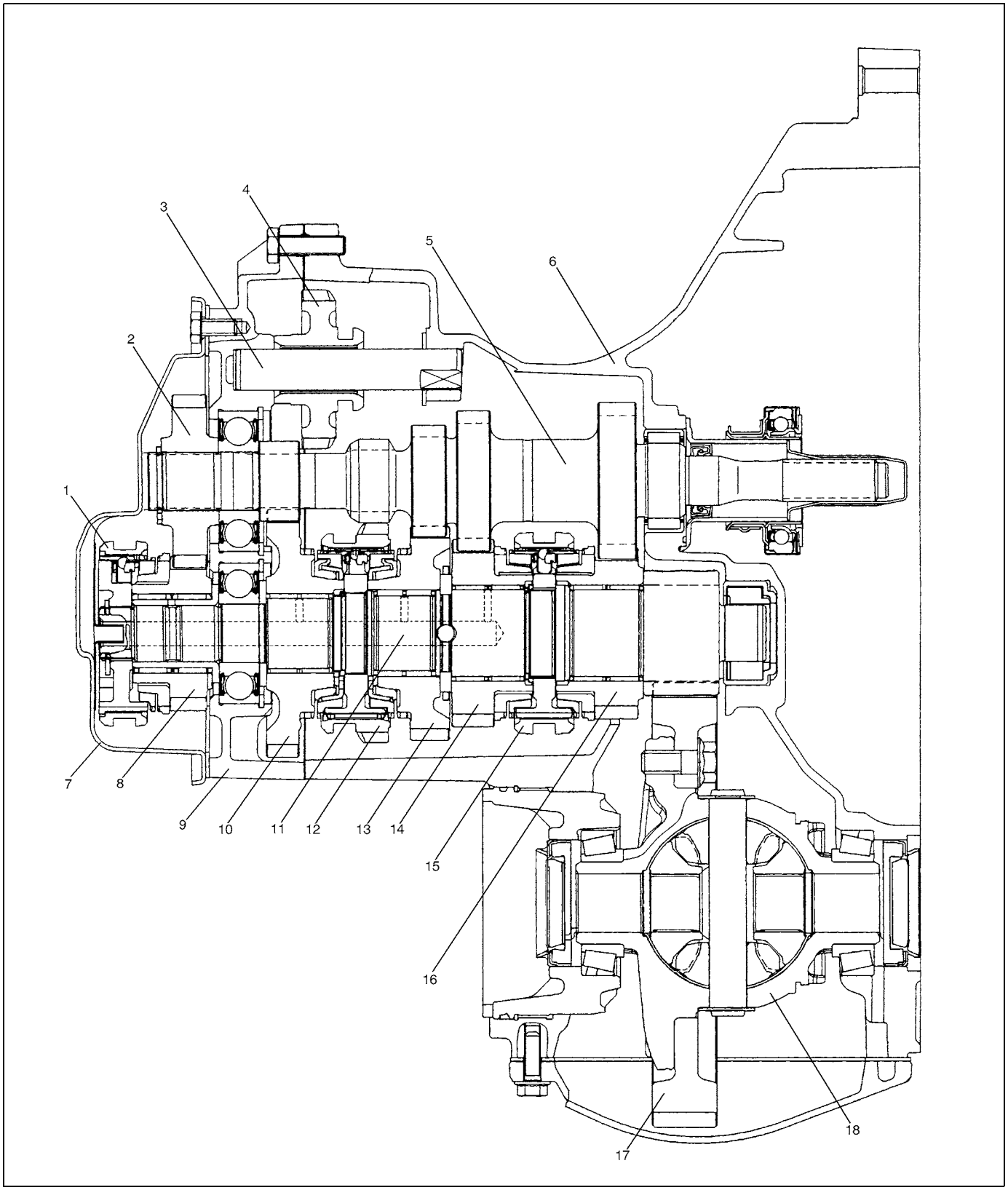

1. 5th gear hub assembly	7. Extension case cover	13. 2nd gear
2. Cluster 5th speed gear	8. 5th gear	14. 3rd gear
3. Reverse gear shaft	9. Extension bearing plate case	15. 3rd & 4th gear hub assembly
4. Reverse gear	10. 1st gear	16. 4th gear
5. Transaxle cluster gear	11. Transaxle main shaft	17. Final gear
6. Transaxle case	12. 1st & 2nd gear hub assembly	18. Differential case

Diagnosis

Manual Transaxle Symptom Diagnosis

Condition	Possible Cause	Correction
Gears slipping out of mesh	Gear shift/select control cables faulty	Replace.
	Worn gear selector rod	Replace.
	Worn gear selector fork or synchronizer sleeve	Replace.
	Worn bearings on transaxle cluster gear or transaxle main shaft	Replace.
	Worn chamfered tooth on sleeve and gear	Replace sleeve and gear.
Hard shifting	Gear shift/select control cables faulty	Replace.
	Inadequate or insufficient lubricant	Replenish.
	Maladjusted clutch cable	Adjust clutch cable.
	Distorted or broken clutch disc	Replace.
	Damaged clutch pressure plate	Replace clutch cover.
	Worn synchronizer ring	Replace.
	Worn chamfered tooth on sleeve or gear	Replace sleeve or gear.
	Worn gear shift/select control cables joint	Replace.
	Distorted shift shaft	Replace.
Noise	Inadequate or insufficient lubricant	Replenish.
	Damaged or worn bearing(s)	Replace.
	Damaged or worn gear(s)	Replace.
	Damaged or worn synchronizer parts	Replace.
	Backlash between bevel pinion and gear faulty	Replace.
	Improper tooth contact in the mesh between bevel pinion and gear	Replace.

On-Vehicle Service

CAUTION:
Do not reuse circlip, spring pin, E-ring, oil seal, gasket, self locking nut and specified parts. Reuse of it can result in trouble.

Manual Transaxle Oil Change

1) Before changing or inspecting oil, be sure to stop engine and lift vehicle horizontally.
2) With vehicle lifted up, check oil level and leakage. If leakage exists, correct it.
3) Remove oil level plug (2) and then drain old oil by removing differential cover (1).
4) Install differential cover (1) with new gasket.

Tightening torque
Differential cover bolt (a): 18 N·m (1.8 kg-m, 13.0 lb-ft)

5) Remove breather plug (3).
6) Fill new specified oil from breather plug hole (4) by specified amount (up to level hole).
7) Tighten oil level plug (2) and breather plug as specified in the following.

Tightening torque
Transaxle oil level plug
(b): 4 N·m (0.4 kg-m, 3.0 lb-ft) and 45° to 180° by the specified procedure

Breather plug
(c): 4 N·m (0.4 kg-m, 3.0 lb-ft) and 180° by the specified procedure

NOTE:

- **It is recommended to use API GL-4 75W-85 gear oil.**
- **Whenever vehicle is hoisted for any service work other than oil change check for oil leakage.**

Transaxle oil API GL-4 (For SAE classification refer to viscosity chart [A])

Transaxle oil capacity
1.6 liters (3.4/2.8 US/Imp·pt)

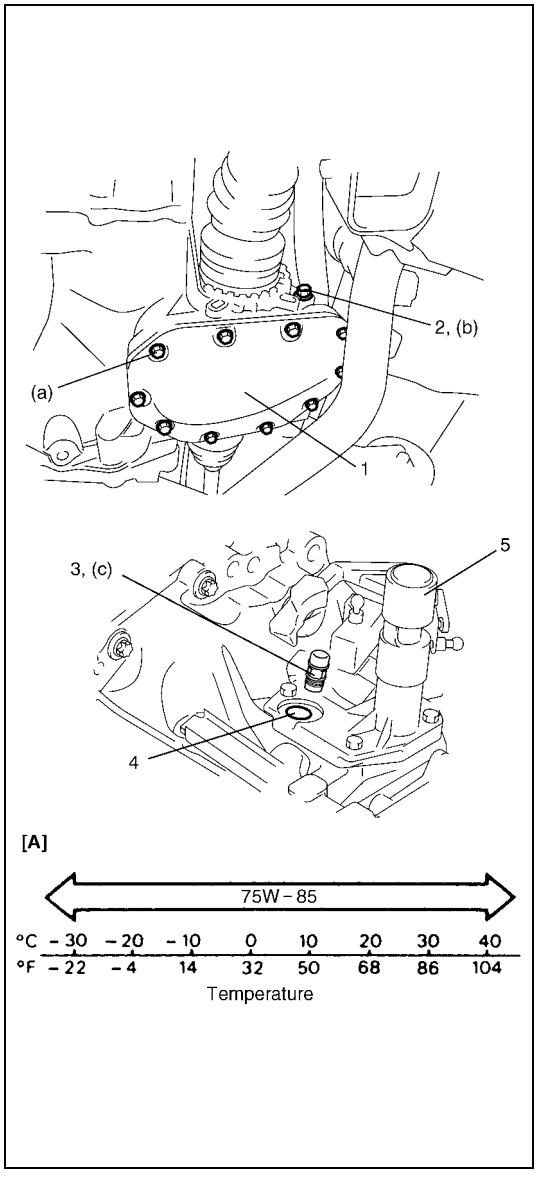

5. Selector lever cover

Differential Side Oil Seal Replacement

1) Drain transaxle oil referring to “Manual Transaxle Oil Change” in this section.
2) Remove front drive shafts referring to “Front Drive Shaft Assembly Removal and Installation” in Section 4A.

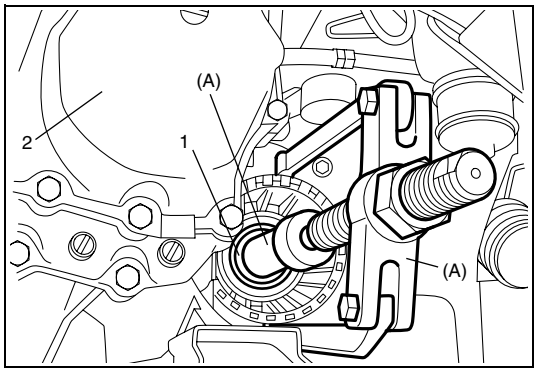

3) Remove oil seals (1) using special tool.

Special tool
(A): 09913-58610

2. Extension case cover

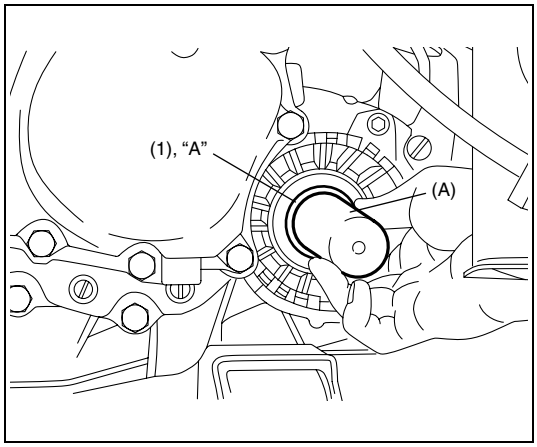

4) Install new oil seals (1) using special tool and hammer.

NOTE:
When installing oil seal, face its spring side inward.

Special tool
(A): 09926-28610

5) Apply grease to oil seal lip and at the same time check drive shaft where oil seal contacts and make sure of its smoothness.

“A”: Grease 99000-25010

6) Install front drive shafts referring to “Front Drive Shaft Assembly Removal and Installation” in Section 4A.
7) Fill transaxle oil as specified referring to “Manual Transaxle Oil Change” in this section, and make sure that oil has been sealed with oil seal.

Gear Shift Control Lever and Cable Components

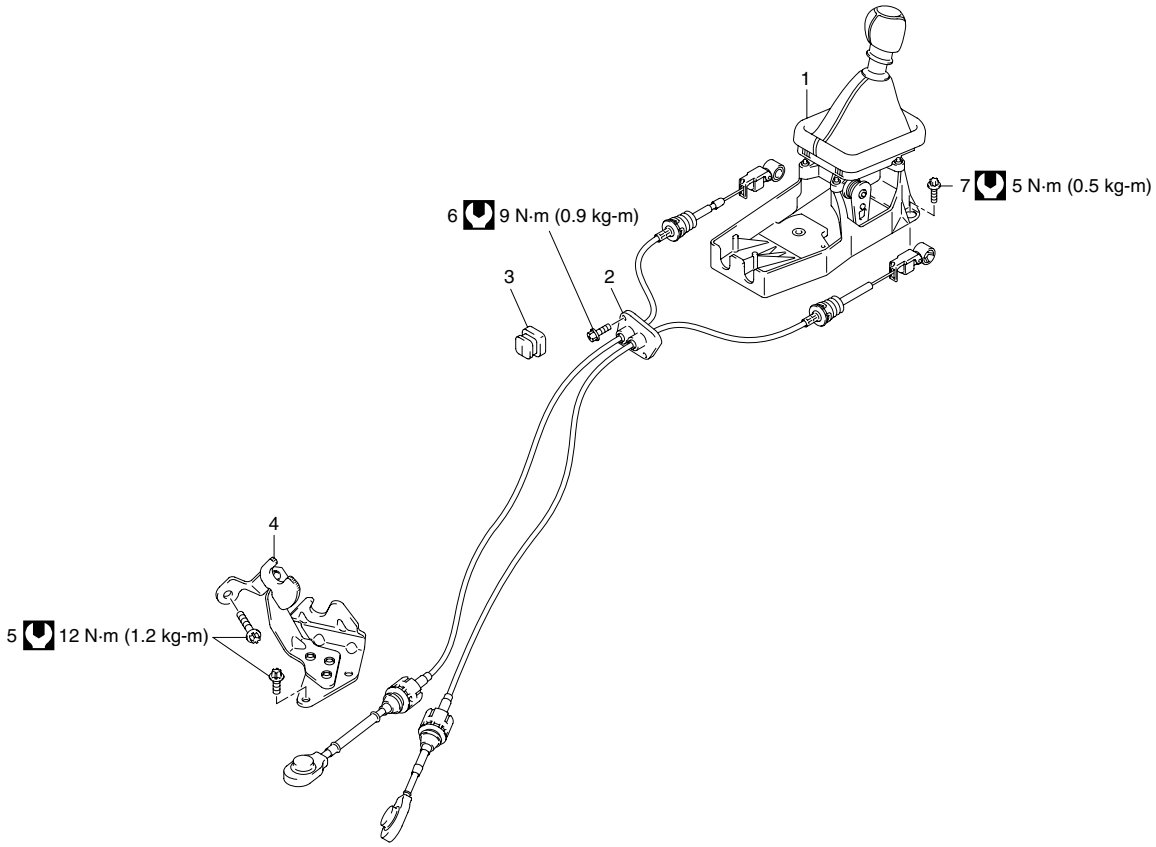

1. Gear shift control lever assembly	4. Cable bracket	7. Gear shift control lever bolt
2. Shift & select cable assembly	5. Cable bracket bolt	Tightening torque
3. Shift control cable seal	6. Cable grommet bolt	

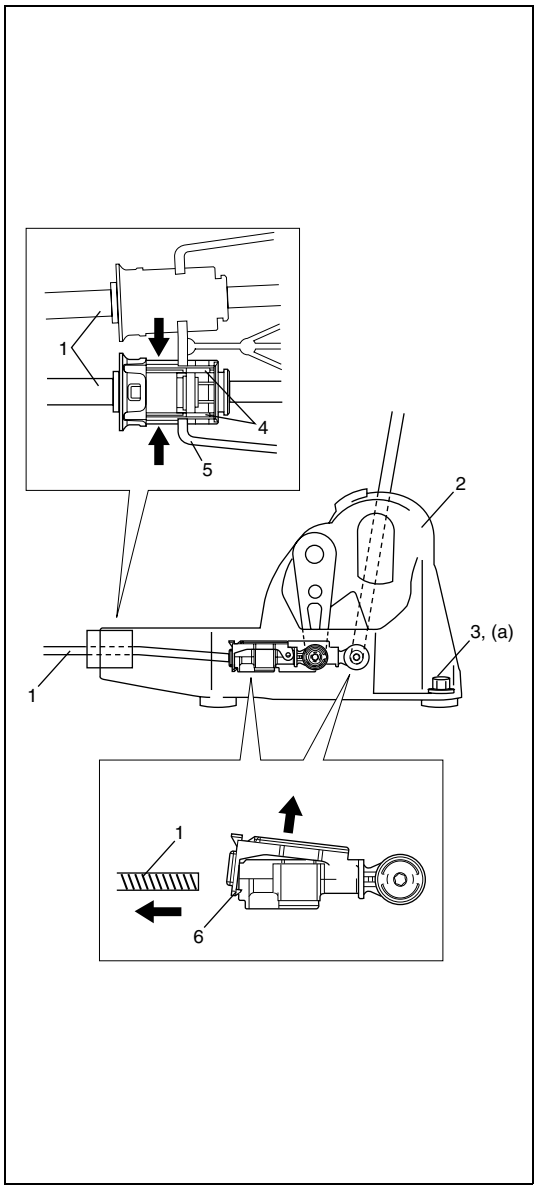

Gear Shift Control Lever and Cable Removal and Installation

Removal

1) Remove console box.
2) Disconnect shift and select cables (1) from gear shift control lever assembly (2).
   a) While pushing claw (4), disconnect cable assembly from bracket (5).
   b) Push up claw (6) of adjuster and pull off cables (1).
3) Remove gear shift control lever bolts (3) and remove gear shift lever assembly (2) from vehicle body.
4) Disconnect shift and select cables (1) from transaxle.
5) After removing cable grommet bolt, take off shift and select cable together with grommet from vehicle body.

Installation

1) Install shift and select cable assembly to vehicle body and then tighten cable grommet bolt to specified torque.

   Tightening torque
   Cable grommet bolt: 9 N·m (0.9 kg-m, 6.5 lb-ft)

2) Install shift and select cable to transaxle.
3) Install gear shift control lever assembly to vehicle body and then tighten gear shift control lever bolt to specified torque.

   Tightening torque
   Gear shift control lever bolt: 5 N·m (0.5 kg-m, 3.5 lb-ft)

4) Attach shift and select cable assembly to bracket.
5) Install shift cable and select cable to each adjuster.

   NOTE:
   Install the shift cable first.

6) Install console box.
7) Confirm that it moves smoothly when shifting into each position.

Reverse Lamp Switch Removal and Installation

Removal

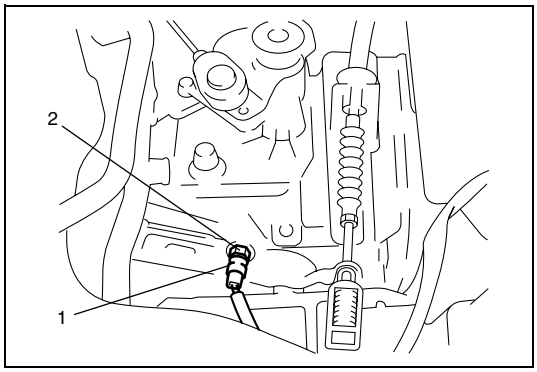

1) Disconnect negative cable at battery.
2) Disconnect reverse lamp switch coupler (1).
3) Remove reverse lamp switch (2).

Installation

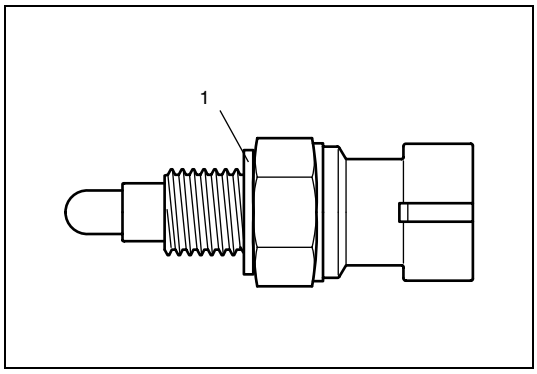

1) Install reverse lamp switch with new seal (1).

   Tightening torque
   Reverse lamp switch: 20 N·m (2.0 kg-m, 15.0 lb-ft)

2) Connect reverse lamp switch coupler.
3) Connect negative cable at battery.
4) Confirm function of back up lamp switch in reverse position by using ohmmeter.

Reverse Lamp Switch Inspection

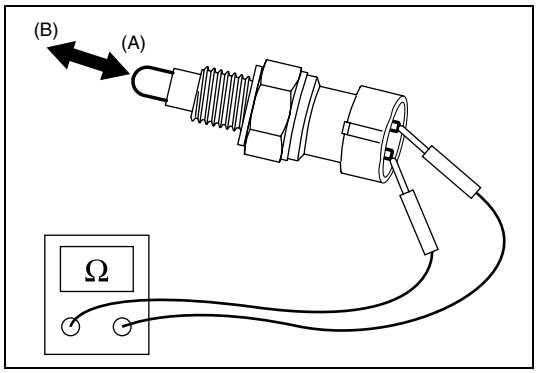

Check reverse lamp switch for function using ohmmeter.

Switch ON (A): Continuity
Switch OFF (B): No continuity

Transaxle Unit Dismounting and Remounting

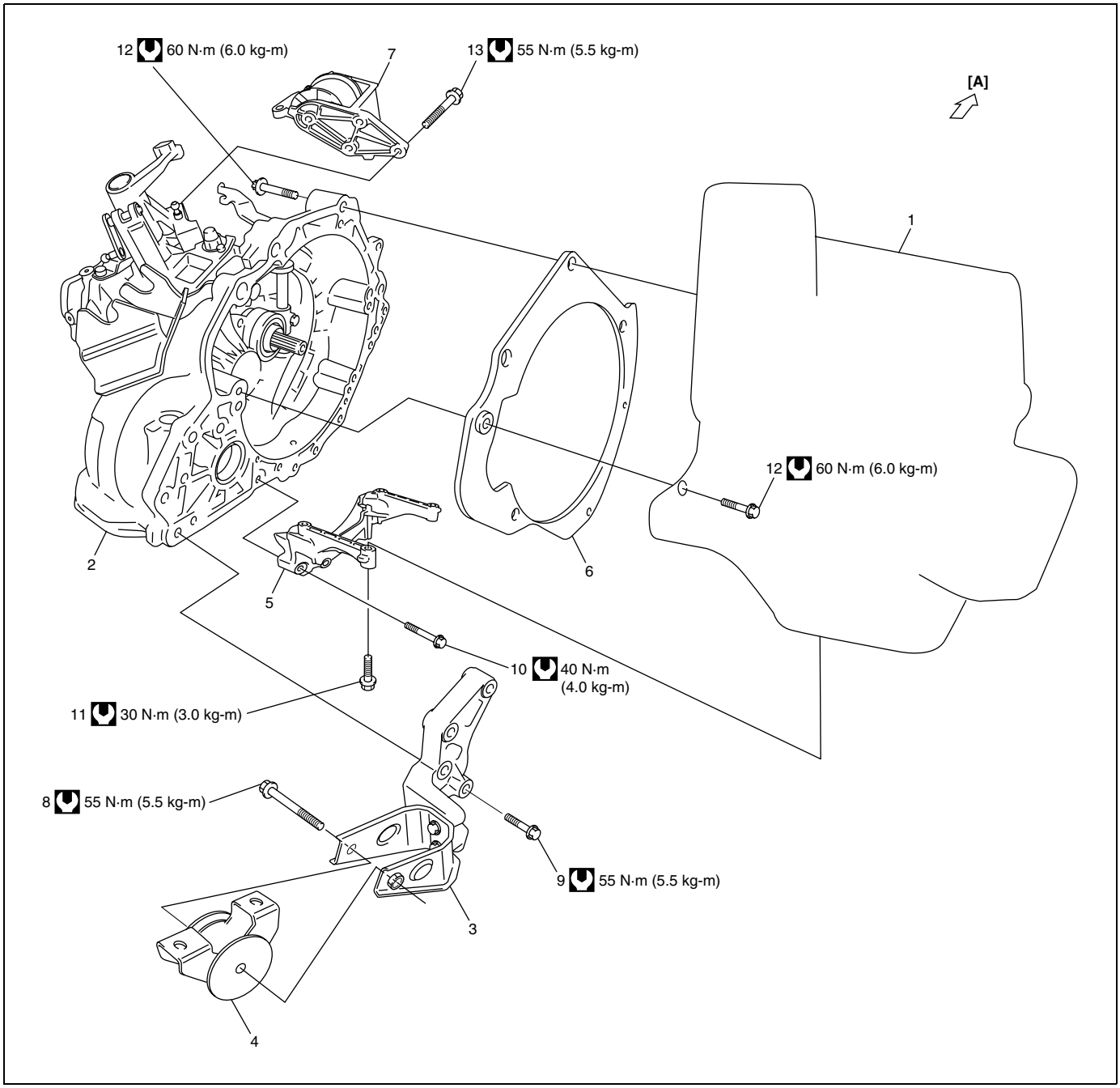

[A]: Forward	5. Transaxle to engine bracket	10. Transaxle to engine bracket No.1 bolt
1. Engine	6. Spacer	11. Transaxle to engine bracket No.2 bolt
2. Transaxle	7. Engine left mounting	12. Transaxle to engine bolt
3. Engine rear mounting bracket	8. Engine rear mounting bolt	13. Engine left mounting bolt
4. Engine rear mounting	9. Engine rear mounting bracket bolt	Tightening torque

Dismounting

1) Disconnect negative cable at battery.
2) Remove battery tray with coolant reservoir.
3) Remove air cleaner and resonator.
4) Remove water pipe bracket and water hoses.
5) Disconnect clutch cable from clutch release shaft and bracket.
6) Disconnect shift and select cables from transaxle and then remove its bracket on transaxle.
7) Undo reverse lamp connector.
8) Support engine using engine hanger.

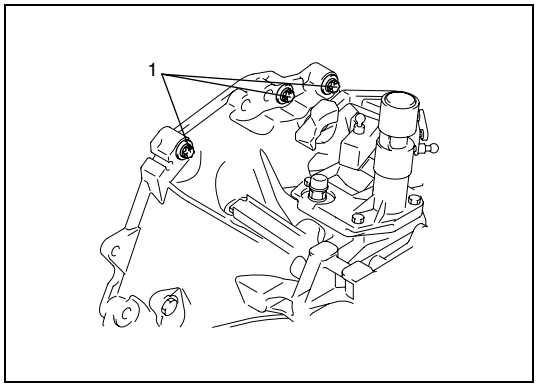

9) Remove transaxle to engine bolts (1). (upper side)
10) Drain transaxle oil referring to “Manual Transaxle Oil Change” in this section.
11) Remove front drive shafts referring to “Front Drive Shaft Assembly Removal and Installation” in Section 4A.
12) Remove exhaust pipe.
13) Remove lower member. (For RM413D)
14) Remove ground cable from transaxle.
15) Remove transaxle to engine bracket.
16) Support transaxle with transmission jack.

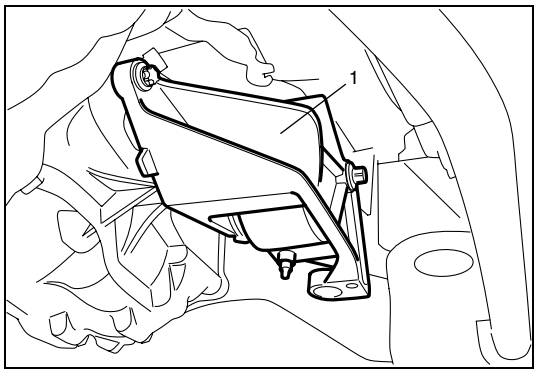

17) Remove engine left mounting with bracket (1).

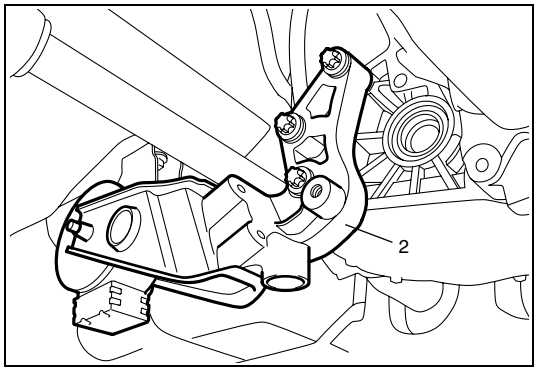

18) Remove engine rear mounting with bracket (2).

19) Remove transaxle to engine bolts. (lower side)
20) Pull transaxle out so as to disconnect cluster gear from clutch disc and then lower it.

Remounting

Reverse dismounting procedure for remounting noting the following.

- Refer to figure at the title of “Transaxle Unit Dismounting and Remounting” for fastener specified torque.
- Set each clamp for wiring securely.
- After connecting clutch cable, be sure to adjust clutch cable nut position referring to “Clutch Cable Adjustment” in Section 7C3.
- Install front drive shafts referring to “Front Drive Shaft Assembly Removal and Installation” in Section 4A.
- Fill transaxle with oil as specified referring to “Manual Transaxle Oil Change” in this section.
- Connect battery and check function of engine, clutch and transaxle.

Transaxle Unit Components

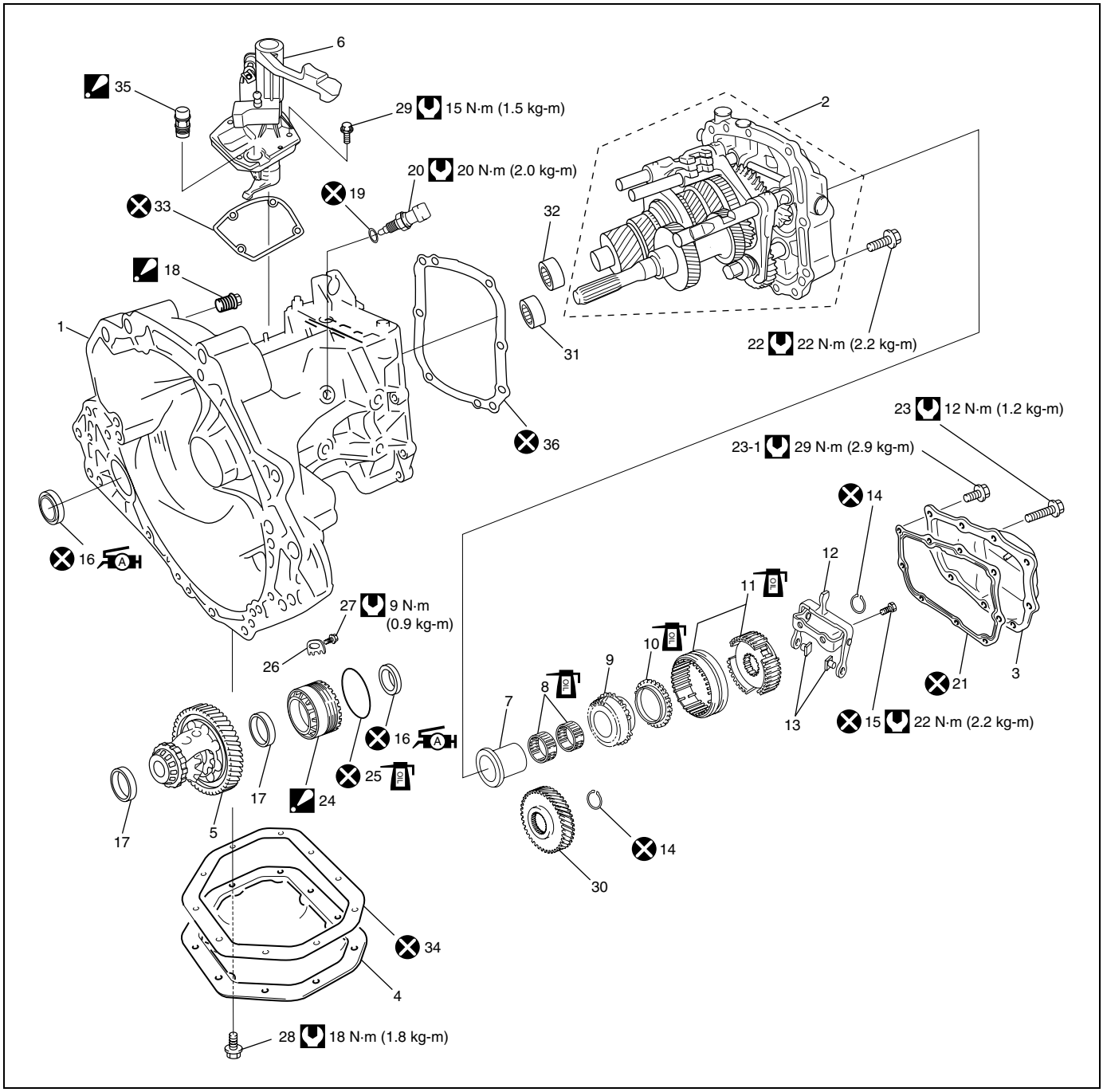

1.	Transaxle case	15.	5th gear selector fork bolt	28.	Differential cover bolt
2.	Transmission end plate	16.	Oil seal : Apply grease 99000-25010 to oil seal lip.	29.	Selector lever cover bolt
3.	Extension case cover	17.	Outer race	30.	Cluster 5th speed gear
4.	Differential cover	18.	Oil level plug : Tighten to 4 N·m (0.4 kg-m) and 45° to 180° by the specified procedure.	31.	Pinion needle bearing
5.	Differential assembly	19.	Reverse lamp switch seal	32.	Main shaft roller bearing
6.	Selector lever cover	20.	Reverse lamp switch	33.	Cover gasket
7.	5th gear inner bearing ring	21.	Transaxle case gasket	34.	Differential cover gasket
8.	5th gear needle bearing	22.	Bearing plate case bolt	35.	Breather plug : Tighten to 4 N·m (0.4 kg-m) and 180° by the specified procedure.
9.	5th speed gear	23.	Extension case cover bolt	36.	Cover gasket
10.	5th gear synchronizer cone	23-1.	Extension case cover bolt (torx)		Tightening torque
11.	5th gear hub assembly	24.	Differential bearing retaining ring : Tighten to 70 N·m (7.0 kg-m), 30° and 15° by the specified procedure.		Do not reuse.
12.	5th gear selector fork	25.	Differential bearing retaining ring seal		Apply transaxle oil.
13.	5th gear selector slider	26.	Retaining ring lock plate		
14.	Snap ring	27.	Lock plate bolt		

Selector Lever Assembly Removal and Installation

Removal

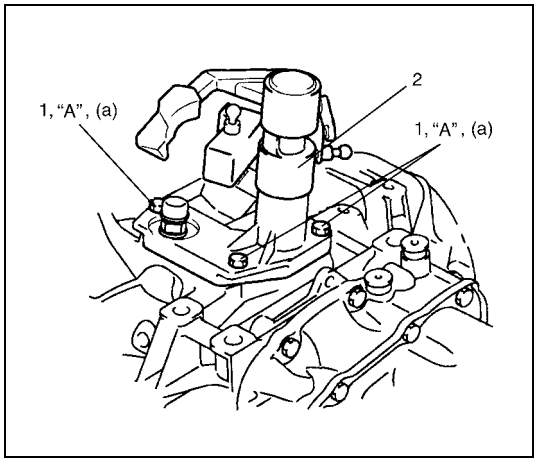

Remove selector lever bolt (1) and then selector lever assembly (2).

Installation

Reverse removal procedure for installation noting the following.

- Do not reuse select lever cover gasket.
- Apply sealant to selector lever cover bolt.
  Tighten cover bolt to specified torque.

"A": Thread lock cement 99000-32110

Tightening torque
Selector lever cover bolt (a): 15 N·m (1.5 kg-m, 11.0 lb-ft)

5th Gears Removal and Installation

Removal

1) Remove extension case cover bolts and take off extension case cover.

CAUTION:
Care should be taken not to distort extension case cover when it is removed from left case.

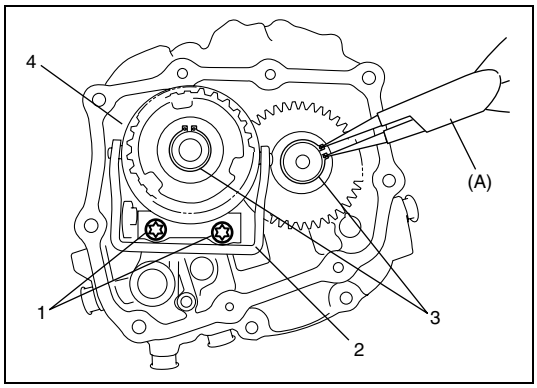

2) Remove 5th gear selector fork bolts (1) and then 5th gear selector fork (2).

NOTE:

If fastening bolts are stiff, heat extension bearing plate case (4) with hot air dryer to approx. 80 °C (176 °F).

3) Remove snap rings (3) using special tool.

Special tool
(A): 09900-06107

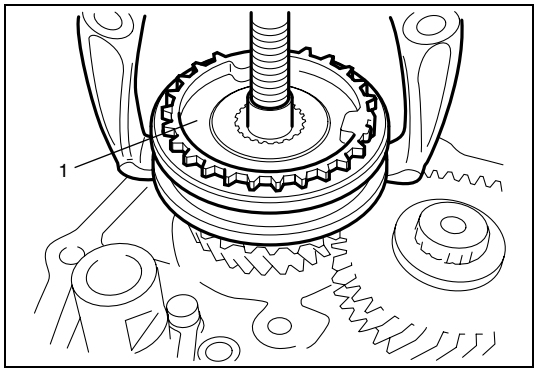

4) Remove 5th gear hub assembly (1) from main shaft using gear puller.
5) Remove 5th gear needle bearing from main shaft.

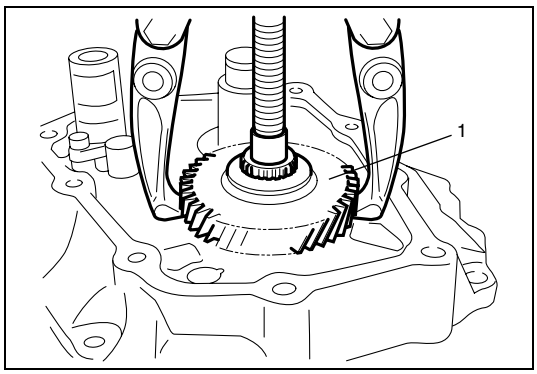

6) Remove cluster 5th gear (1) from cluster gear using gear puller.

Installation

NOTE:

Coat all parts with transaxle oil before assembly.

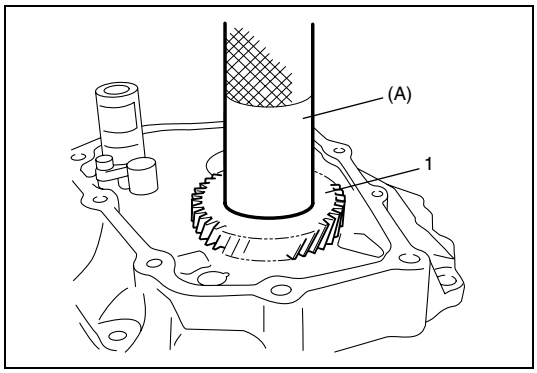

1) Install cluster 5th gear (1) to cluster gear using special tool.

Special tool
(A): 09913-84510

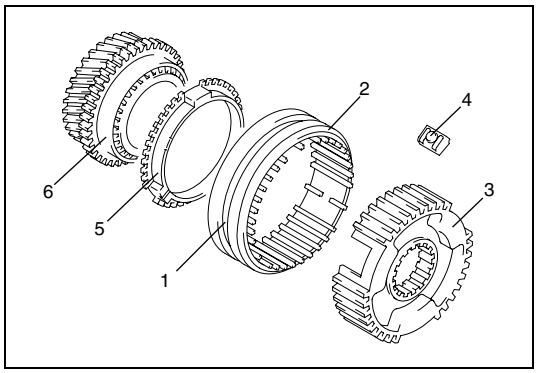

2) Assemble 5th gear hub assembly (hub (3), sleeve (1) and keys (4)) as shown in figure.

2. chamfer
5. Synchronizer ring
6. 5th gear

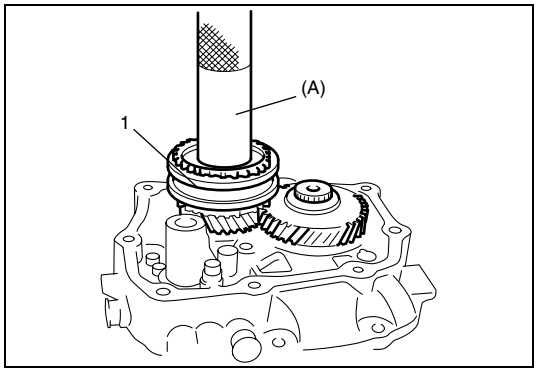

3) Install needle bearing, 5th gear and synchronizer ring onto main shaft.
Drive 5th gear assembly onto main shaft facing chamfer of sleeve to extension case cover side, using special tool and hammer.

Special tool
(A): 09913-70123

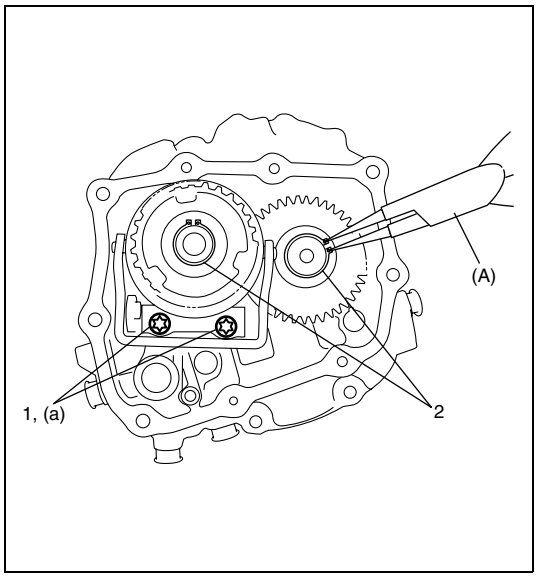

4) Install snap rings (2) and confirm that snap ring is installed in groove securely.

Special tool
(A): 09900-06107

5) Install 5th gear selector fork and then tighten new bolts (1) to specified torque.

Tightening torque
5th gear selector fork bolt (a): 22 N·m (2.2 kg-m, 16.0 lb-ft)

CAUTION:
Do not reuse 5th gear selector fork bolts (1). Be sure to use new adhesive pre-coated bolts. Otherwise, bolts may loosen.

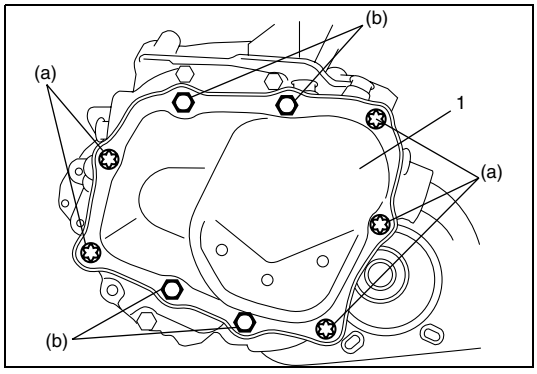

6) Install extension case cover (1) with new gasket and then tighten bolts to specified torque.

Tightening torque
Extension case cover bolt
(a): 29 N·m (2.9 kg-m, 21.0 lb-ft)
(b): 12 N·m (1.2 kg-m, 8.5 lb-ft)

Gear Selector, Cluster Gear and Main Shaft Removal and Installation

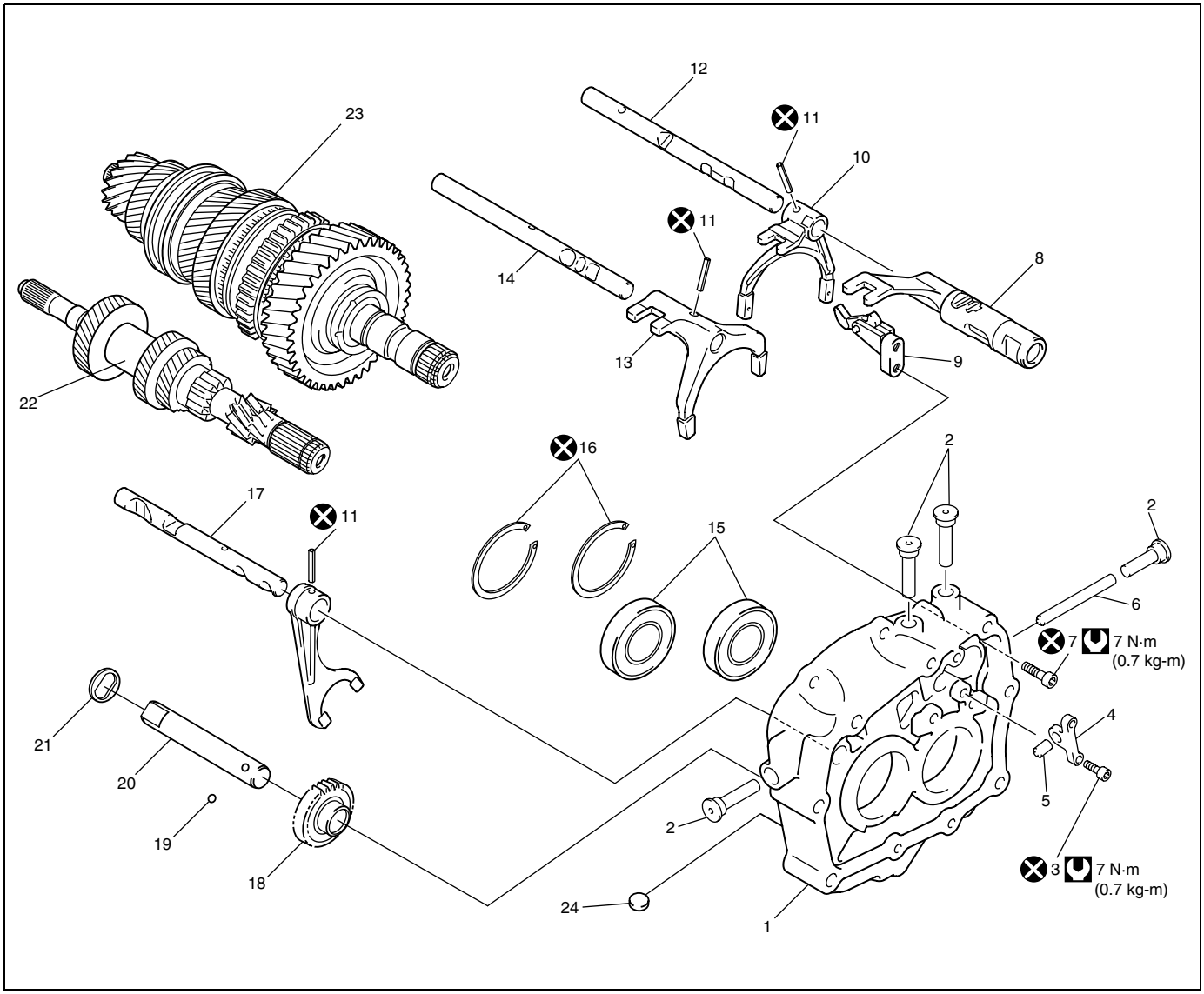

1. Extension bearing plate case	10. 3rd & 4th gear selector fork	19. Reverse gear shaft ball
2. Gear shift rod locking bush	11. Selector fork pin	20. Reverse gear shaft
3. Gear shift rod connector screw	12. 3rd & 4th gear selector rod	21. Reverse gear thrust washer
4. Gear shift rod connector	13. 1st & 2nd gear selector fork	22. Cluster gear
5. Gear shift rod detent pin No.1	14. 1st & 2nd gear selector rod	23. Main shaft assembly
6. Gear shift rod detent pin No.2	15. Ball bearing	24. Magnet
7. 5th gear pawl bolt	16. Extension case snap ring	Tightening torque
8. 5th gear shift rod fork	17. Reverse gear selector rod	Do not reuse.
9. 5th gear pawl	18. Reverse gear	

Removal

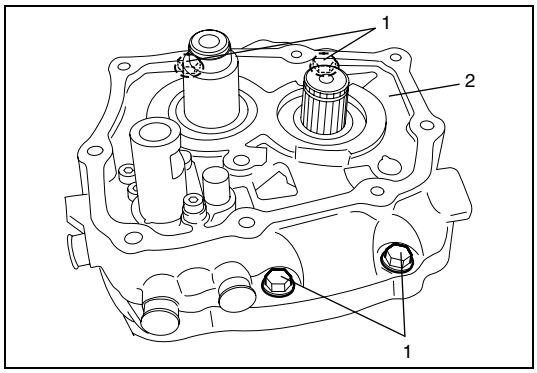

1) Remove bearing plate case bolt (1) and then detach transmission end plate (2) from transaxle case.

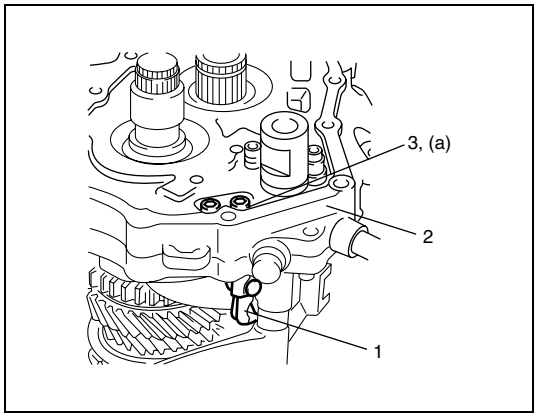

2) Remove 5th gear pawl (1) from extension bearing plate case (2).

NOTE:

If fastening bolts are stiff, heat extension bearing plate case with hot air dryer to approx. 80 °C (176 °F).

3. 5th gear pawl bolt

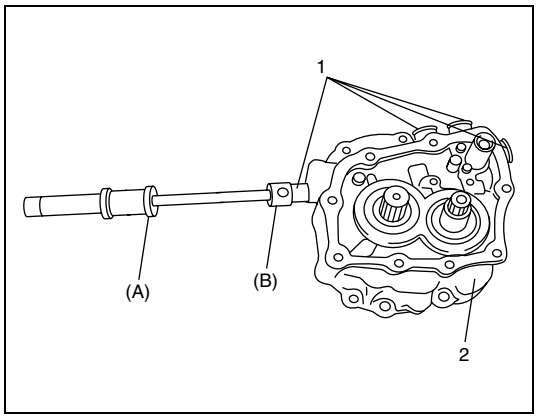

3) Remove gear shift rod locking bushes (1) from extension bearing plate case (2) using special tools.

Special tool
(A): 09922-48620
(B): 09922-48610

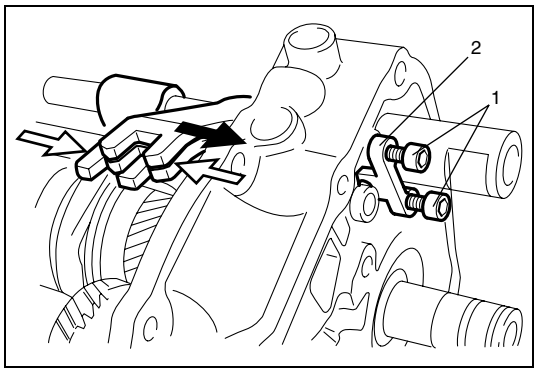

4) Remove gear shift rod connector bolt (1).
5) Engage 2nd, 3rd and 5th gear and then remove gear shift rod connector (2).

NOTE:

If fastening bolts are stiff, heat extension bearing plate case with hot air dryer to approx. 80 °C (176 °F).

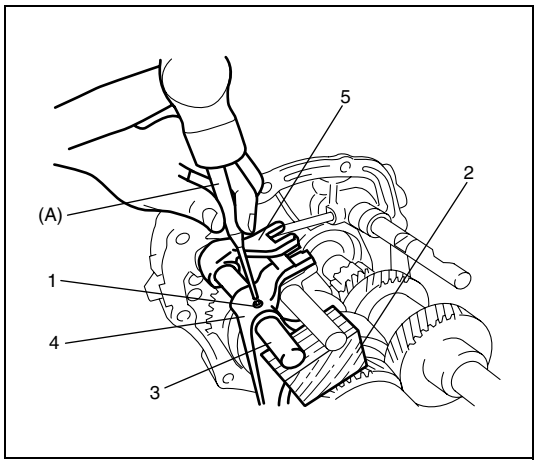

6) Remove 3rd & 4th selector fork pin (1) using special tool and then pull out 3rd & 4th gear selector rod (3), selector fork (4) and 5th gear shift rod fork (5).

Special tool
(A): 09922-89810

CAUTION:
When removing selector fork pin, apply a piece of wood (2) or the like to gear selector rod so as to protect it against damage.

7) Remove 5th gear shift fork.

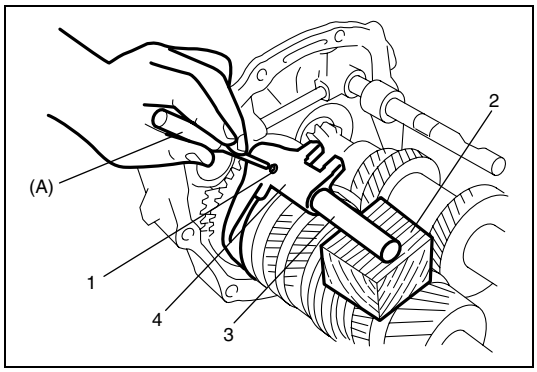

8) Remove 1st & 2nd selector fork pin (1), 1st & 2nd gear selector rod (3) and selector fork (4) in the same manner as step 6).

Special tool
(A): 09922-89810

2. A piece of wood

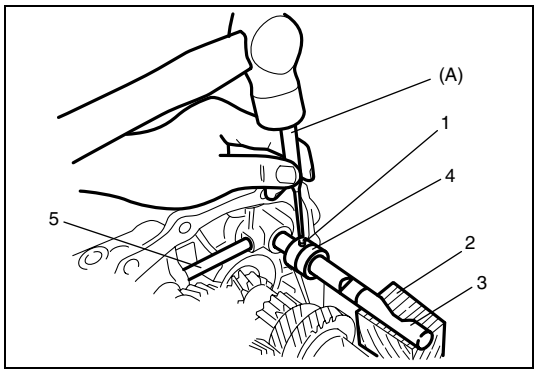

9) Remove reverse selector fork pin (1), reverse gear selector rod (3) and reverse gear selector fork (4) in the same manner as step 6).

Special tool
(A): 09922-89810

10) Remove gear shift rod detent pin No.2 (5).

2. A piece of wood

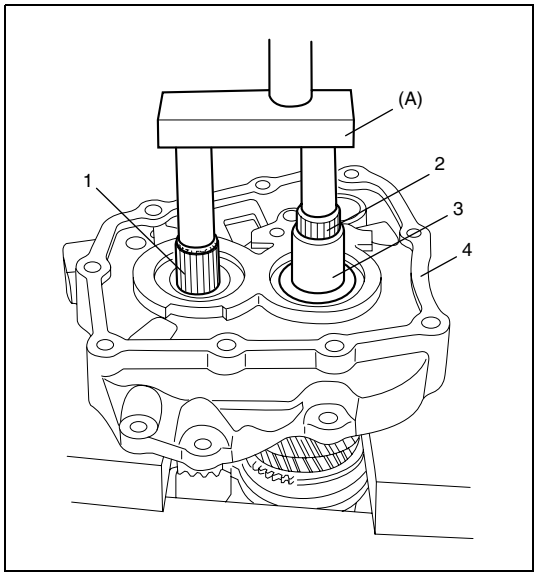

11) Drive out cluster gear (1) and main shaft (2) from extension bearing plate case (4) using special tool and then take off 5th gear inner bearing ring (3).

Special tool
(A): 09922-68610

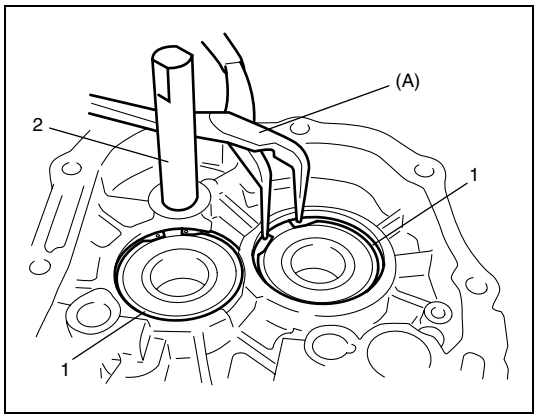

12) Remove circlips (1) using special tool.

Special tool
(A): 09900-06105

13) Clamp reverse gear shaft (2) with soft jawed vise and remove reverse gear shaft and ball by tapping plate case with plastic hammer.

NOTE:
Do not tap mating face of extension bearing plate case.

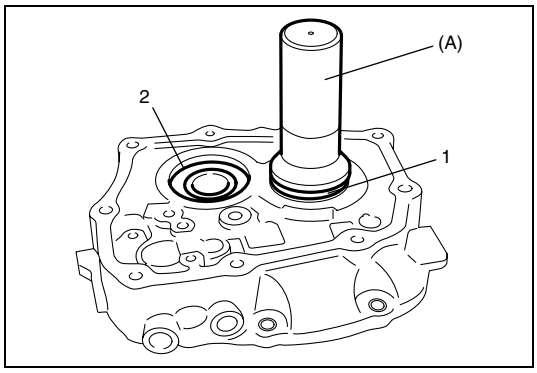

14) Remove cluster gear ball bearing (1) and main shaft ball bearing (2) from extension bearing plate case using special tool.

Special tool
(A): 09913-75810

Installation

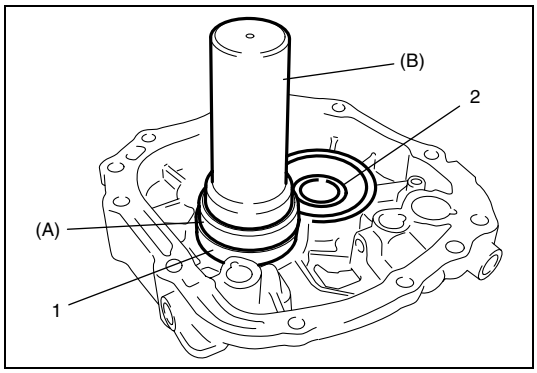

1) Install cluster gear ball bearing (1) and main shaft ball bearing (2) to extension bearing plate case using special tools.

Special tool
(A): 09924-07720
(B): 09913-75810

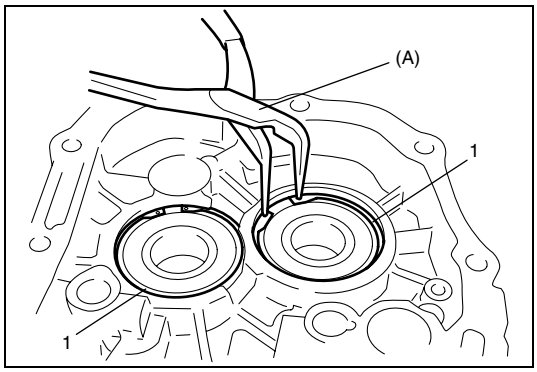

2) Install new circlips (1) using special tool.

Special tool
(A): 09900-06105

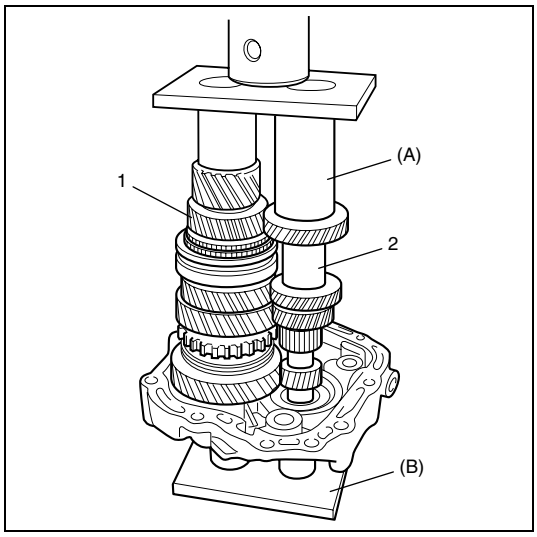

3) Install main shaft (1) and cluster gear (2) using special tools and hydraulic press.

Special tool
(A): 09922-58620
(B): 09922-58610

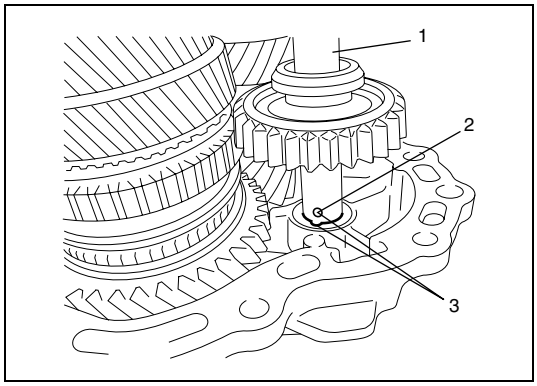

4) Install reverse gear shaft (1) and ball (2) on a matched position (3) according to figure by using hydraulic press.

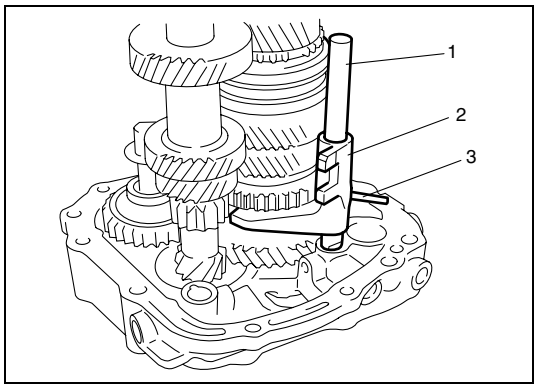

5) Install 1st & 2nd gear selector rod (1) and selector fork (2) to extension bearing plate case and then drive in new selector fork pin (3).

CAUTION:
When installing selector fork pin, apply a piece of wood or the like to gear selector rod so as to protect it against damage.

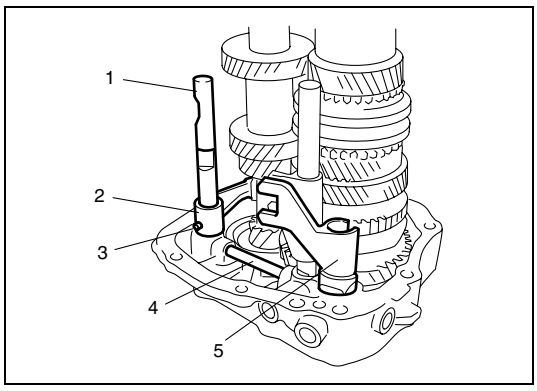

6) Install gear shift rod detent pin No.2 (4).
7) Install reverse gear selector rod (1) and selector fork (2) in the same manner as step 5).
8) Install 5th gear shift rod fork (5).

3. Selector fork pin

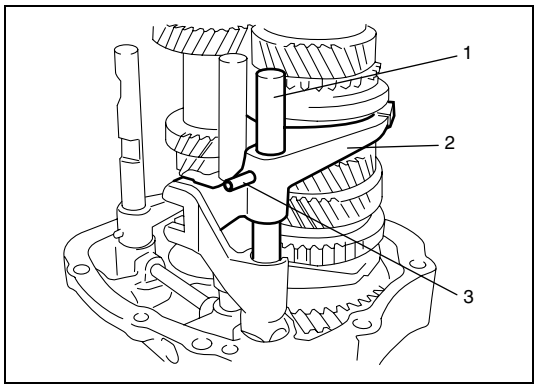

9) Install 3rd & 4th gear selector rod (1) and selector fork (2) in the same manner as step 5).

3. Selector fork pin

10) Install gear shift rod locking bushes using plastic hammer.

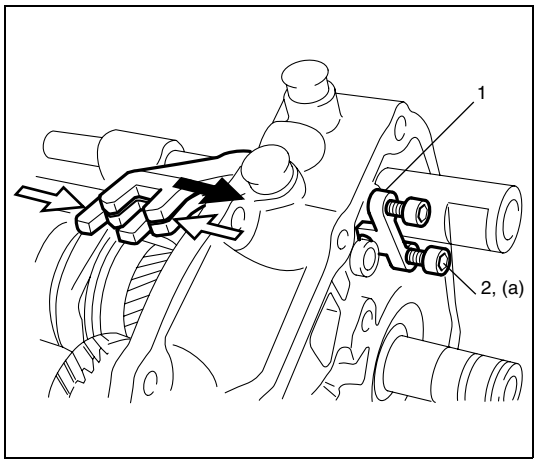

11) Engage 2nd, 3rd and 5th gear and install gear shift rod connector (1) with specified torque.

2. Gear shift rod connector bolt

Tightening torque
Gear shift rod connector bolt (a): 7 N·m (0.7 kg-m, 5.0 lb-ft)

CAUTION:
Do not reuse gear shift rod connector bolt (2). Be sure to use new adhesive pre-coated bolts. Otherwise, bolts may loosen.

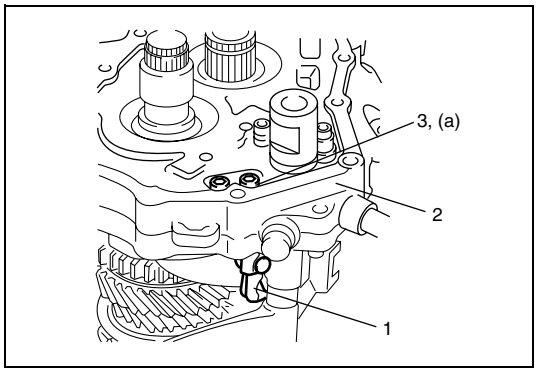

12) Install 5th gear pawl (1) to extension bearing plate case (2) and tighten bolts to specified torque.

Tightening torque
5th gear pawl bolt (a): 7 N·m (0.7 kg-m, 5.0 lb-ft)

CAUTION:
Do not reuse 5th gear pawl bolt (3). Be sure to use new adhesive pre-coat bolts. Otherwise, bolts may loosen.

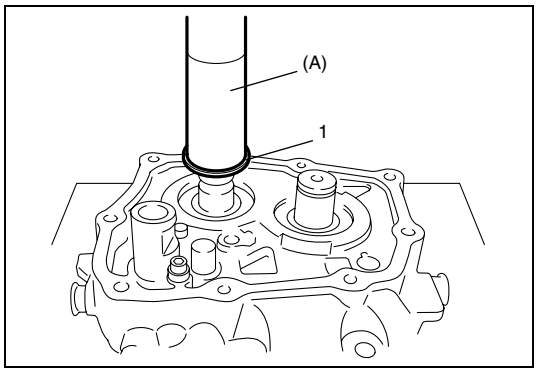

13) Install 5th gear inner bearing ring to main shaft (1) using special tool.

Special tool
(A): 09913-84510

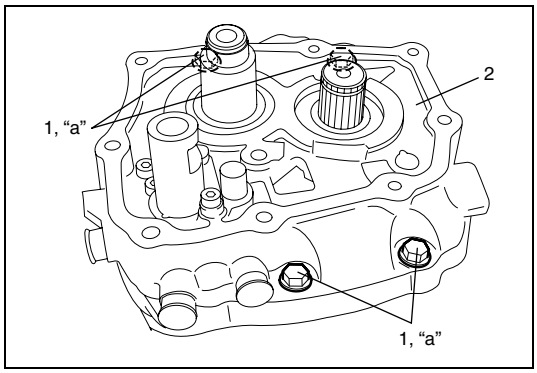

14) Install transmission end plate (2), and tighten bearing plate case bolt (1) with specified torque.

Tightening torque
Bearing plate case bolt (a): 22 N·m (2.2 kg-m, 16.0 lb-ft)

Cluster Gear & Main Shaft Components

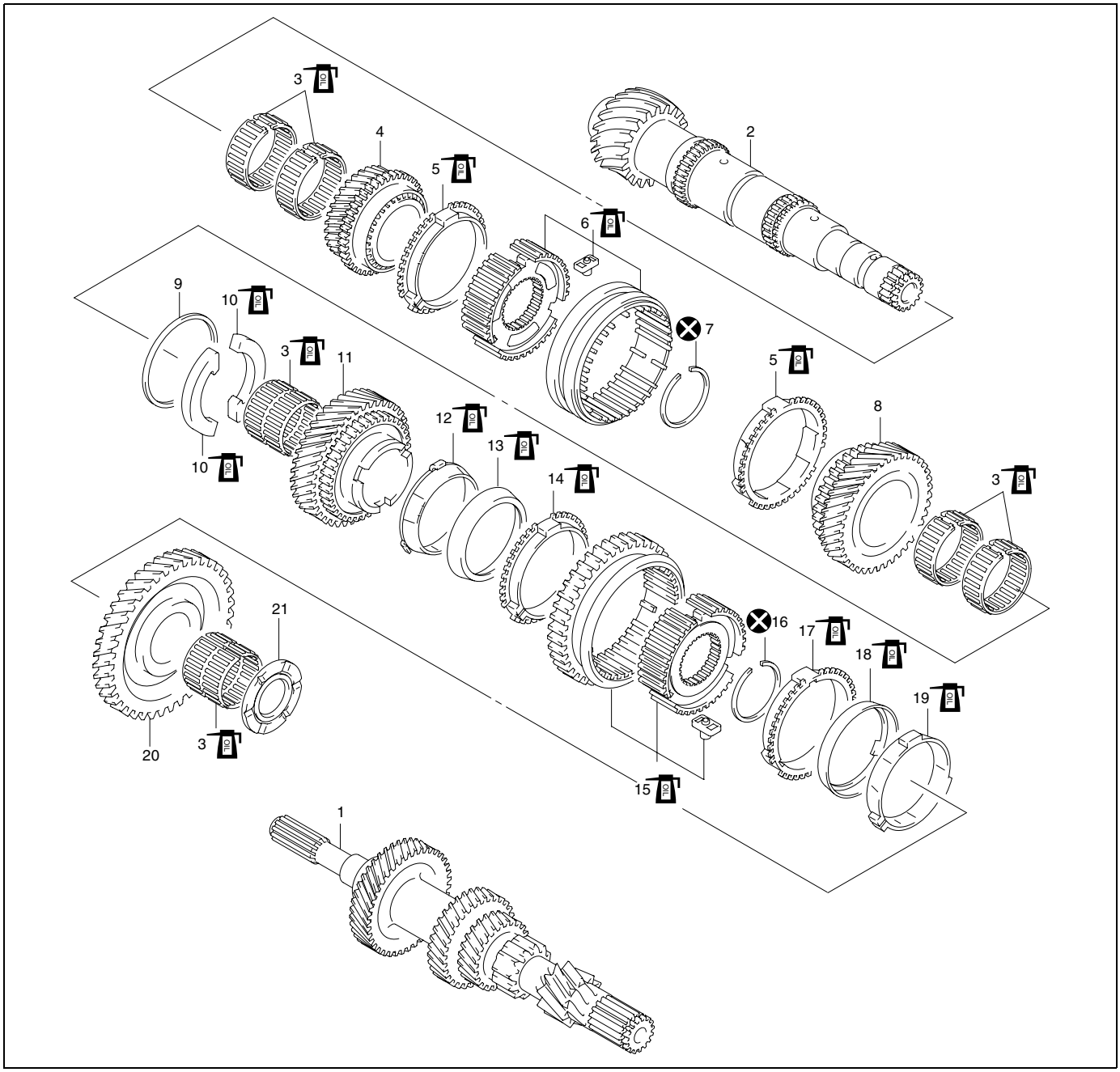

1. Transaxle cluster gear	9. 4th gear wear plate	17. 1st gear synchronizer outer ring
2. Transaxle main shaft	10. 2nd gear thrust washer	18. 1st gear synchronizer intermediate ring
3. Needle bearing	11. 2nd gear	19. 1st gear synchronizer inner ring
4. 4th gear	12. 2nd gear synchronizer inner ring	20. 1st gear
5. 3rd & 4th synchronizer ring	13. 2nd gear synchronizer intermediate ring	21. 1st gear wear plate
6. 3rd & 4th gear hub assembly	14. 2nd gear synchronizer outer ring	Apply transaxle oil
7. Snap ring	15. 1st & 2nd gear hub assembly	Do not reuse.
8. 3rd gear	16. 2nd gear snap ring	

Main Shaft Disassembly and Assembly

Disassembly

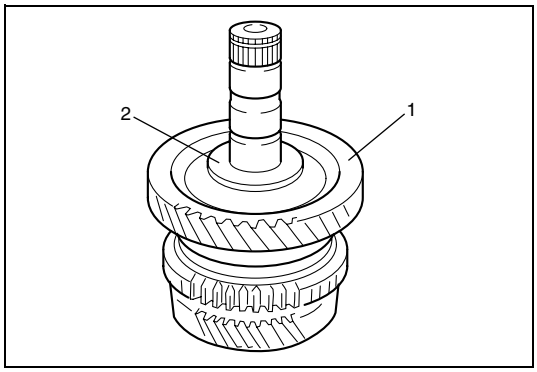

1) Remove 1st gear wear plate (2) and then take out 1st speed gear (1), 1st gear needle bearing and 1st gear synchronizer ring assembly.

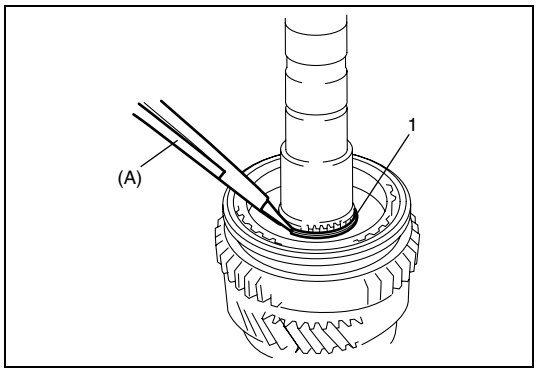

2) Using special tool, remove 2nd gear snap ring (1).

Special tool
(A): 09900-06107

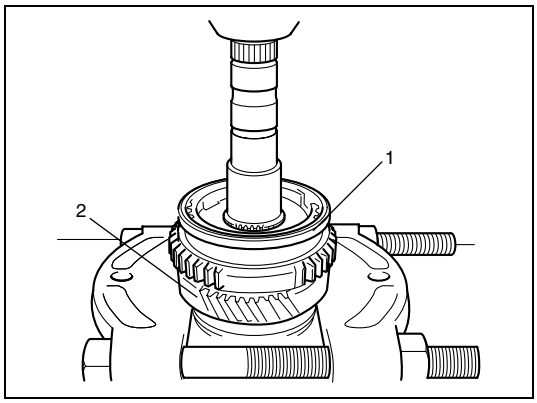

3) Apply puller to 2nd gear and drive out 1st & 2nd gear hub assembly (1) with 2nd gear (2) using hydraulic press.

CAUTION:
Make sure to use flat side of puller to avoid causing damage to 2nd gear tooth.

4) Remove 2nd gear needle bearing.

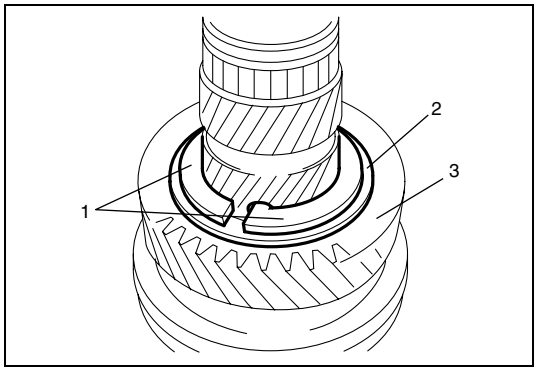

5) Remove 2nd gear thrust washer (1) and 4th gear wear plate (2).
6) Take out 3rd gear (3), 3rd gear needle bearing and 3rd & 4th synchronizer ring.

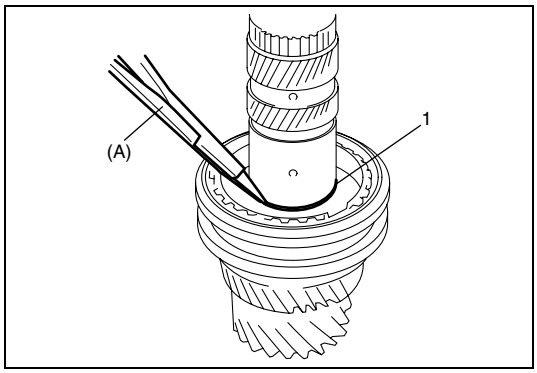

7) Remove snap ring (1) using special tool.

Special tool
(A): 09900-06107

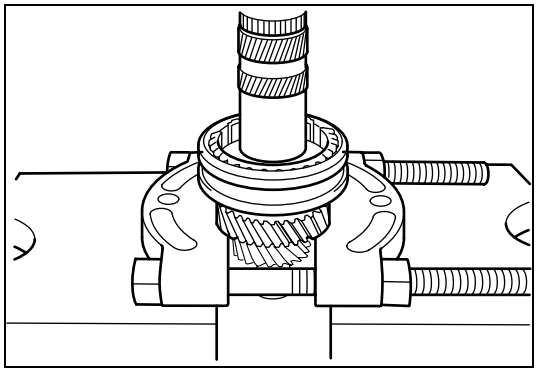

8) Apply puller to 4th gear (2) and drive out 3rd & 4th gear hub assembly (1) with 4th gear using hydraulic press.

CAUTION:
Make sure to use flat side of puller to avoid causing damage to 4th gear tooth.

9) Remove 4th gear needle bearing.

Assembly

1) Clean all components thoroughly, inspect them for any abnormality and replace with new ones as necessary.

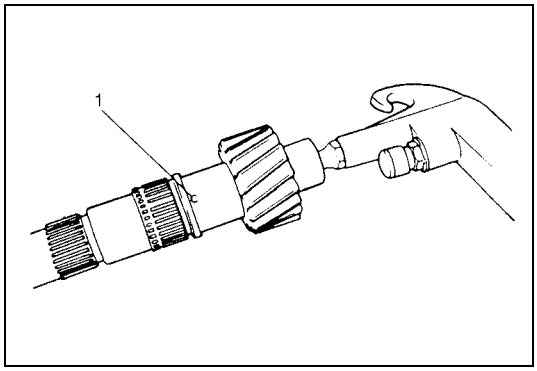

2) To ensure lubrication, air blow oil holes (1) and make sure that they are free from any obstruction.

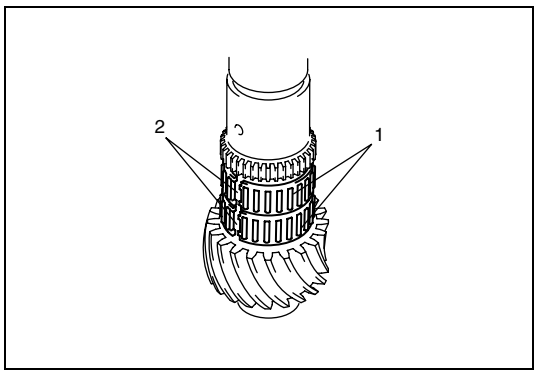

3) Install two pieces of needle bearings (1) for 4th gear onto main shaft.

NOTE:
Align each slot (2) of needle bearings.

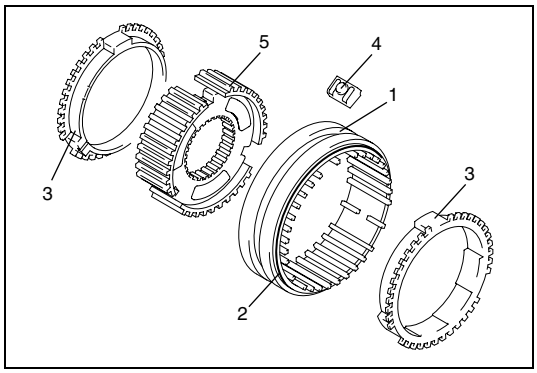

4) Assemble 3rd & 4th gear hub assembly (hub (5), sleeve (1) and keys (4)) as shown in figure.

2.	Groove of chamfer
3.	Synchronizer ring

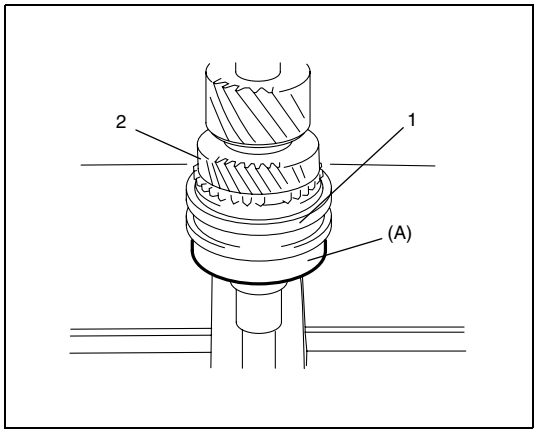

5) Install 4th gear (2) and synchronizer ring onto main shaft. Press-fit 3rd & 4th gear hub assembly (1) onto main shaft facing groove of chamfer of sleeve to 3rd gear side, using special tool and hydraulic press.

Special tool
(A): 09924-07710

NOTE:

Check free rotation of 4th gear (2) after press-fitting 3rd & 4th gear hub assembly (1).

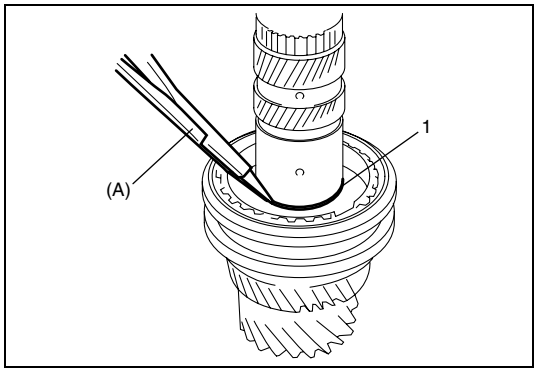

6) Install new snap ring (1) using special tool.

Special tool
(A): 09900-06107

7) Install 3rd gear needle bearing in the same manner as step 5).
8) Drive in 3rd gear.

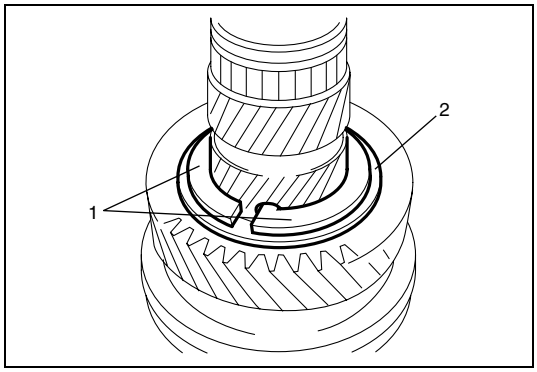

9) Install 2nd gear thrust washer (1) and 4th gear wear plate (2).

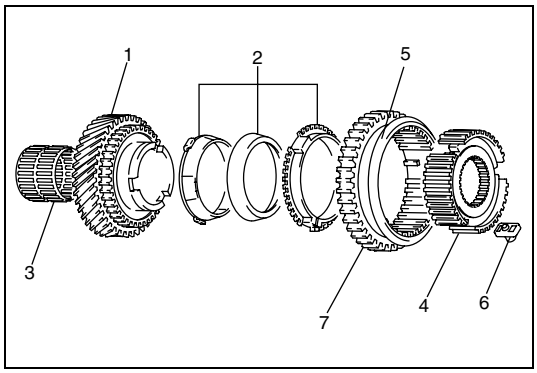

10) Assemble 2nd gear (1), 2nd gear synchronizer ring assembly (2), 2nd gear needle bearing (3) and 1st & 2nd gear hub assembly (hub (4), sleeve (5) and keys (6)).

NOTE:

Facing gear side of sleeve (7) to 2nd gear side.

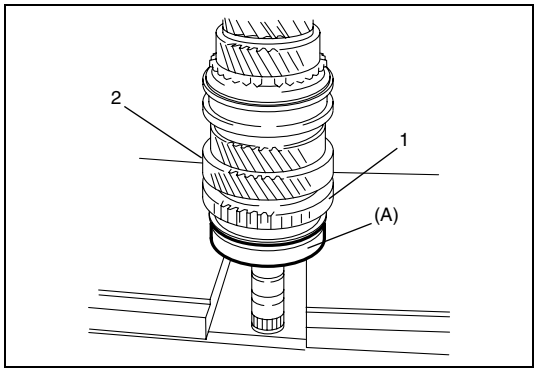

11) Press-fit the assembled parts in step 12) onto main shaft using special tool and hydraulic press.

Special tool
(A): 09924-07710

NOTE:

Check free rotation of 2nd gear (2) after press-fitting 1st & 2nd gear hub assembly (1).

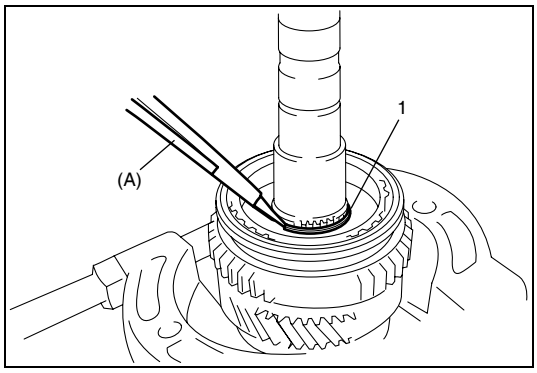

12) Install new 2nd gear snap ring (1) using special tool.

Special tool
(A): 09900-06107

13) Install 1st gear synchronizer ring assembly onto main shaft.
14) Install 1st gear needle bearing onto main shaft.

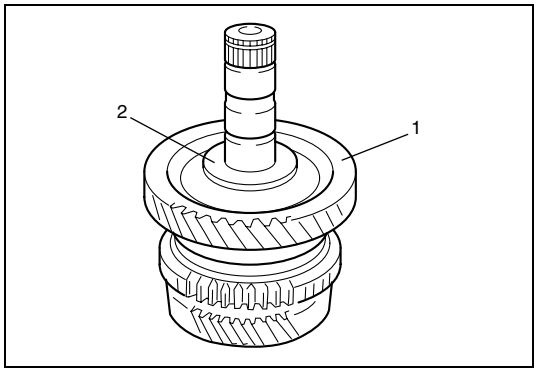

15) Drive in 1st gear (1) and then install 1st gear wear plate (2).

Cluster Gear & Main Shaft Inspection

- Check free rotation of all speed gears.
- Inspect cluster gear & main shaft assembly for wear, distortion or damage.
  If any defect is found, replace defective part with new one.

Transaxle Case Disassembly and Assembly

Disassembly

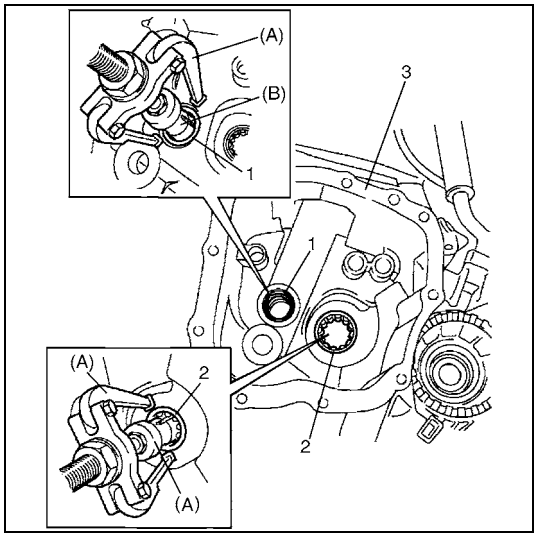

1) Remove pinion needle bearing (1) from transaxle case (3) using special tools.

Special tool
(A): 09925-08610
(B): 09926-58610

2) Remove main shaft roller bearing (2) from transaxle case (3) using special tools.

Special tool
(A): 09925-08610

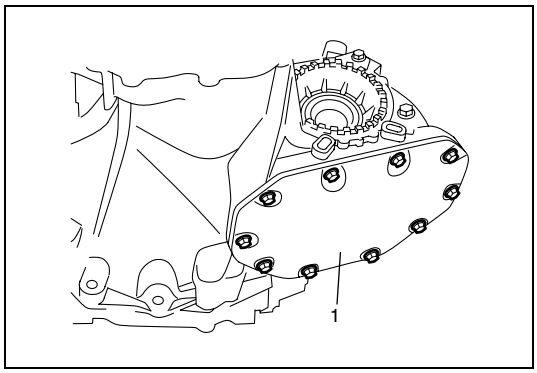

3) Remove differential cover (1) with gasket.
4) Remove left and right side differential side oil seals referring to “Differential Side Oil Seal Replacement” in this section.

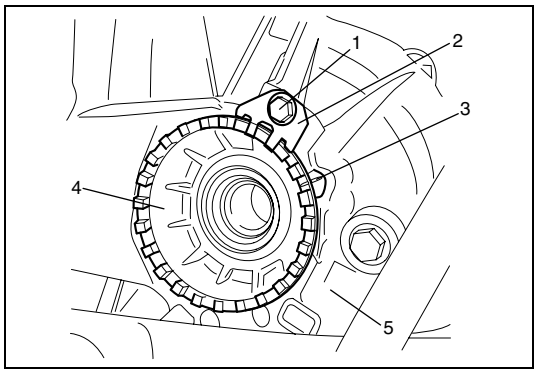

5) Remove lock plate bolt (1) and then retaining ring lock plate (2).

NOTE:

Mark position (3) of differential bearing retaining ring (4) to transaxle case (5).

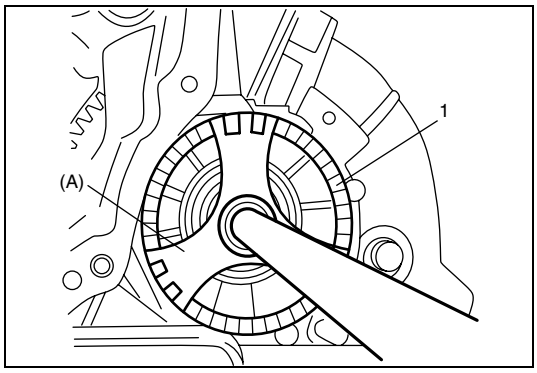

6) Loosen differential bearing retaining ring (1) using special tool.

Special tool
(A): 09925-18610

7) Remove differential assembly from lower side of transaxle case.
8) Remove differential bearing retaining ring, from transaxle case and remove O-ring from bearing retaining ring.

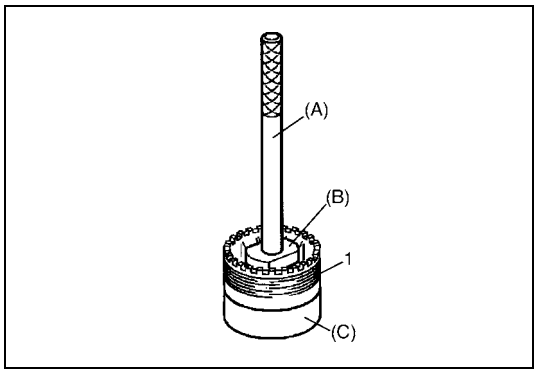

9) Remove differential side bearing outer race from differential bearing retaining ring (1) using special tools.

Special tool
(A): 09925-68620
(B): 09925-68610
(C): 09919-08610

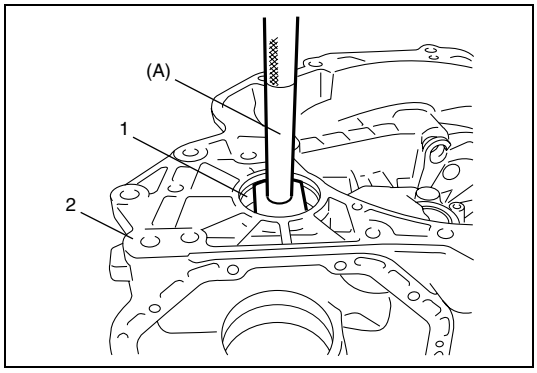

10) Remove right side outer race (1) from transaxle case (2) using special tool.

Special tool
(A): 09925-68620

Assembly

NOTE:
Before installation, wash each part and apply specified transaxle oil to sliding faces of bearing.

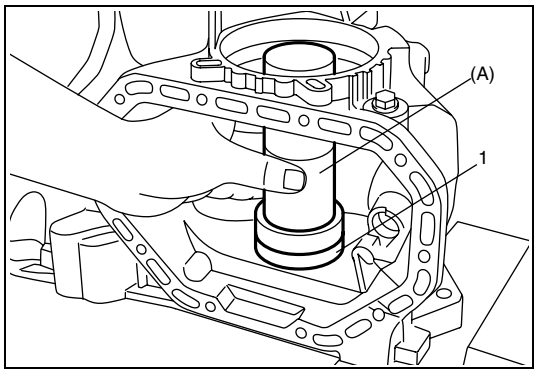

1) Install right side outer race (1) to transaxle case using special tool and hammer.

Special tool
(A): 09913-85210

2) Apply transaxle oil to new O-ring and then install O-ring to groove of differential bearing retaining ring.

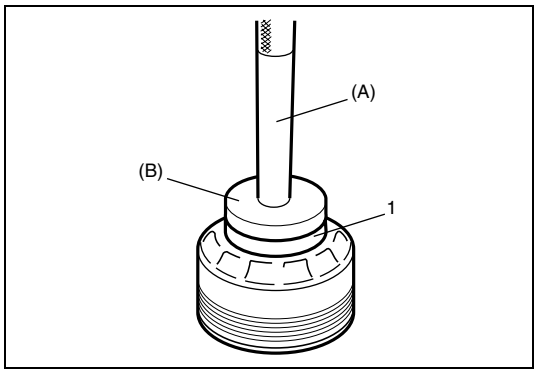

3) Install left side differential side bearing outer race (1) to bearing ring using special tools.

Special tool
(A): 09925-68620
(B): 09925-68610

4) Install differential assembly and then install differential bearing retaining ring with specified procedure according to “Differential Adjustment” in this section.

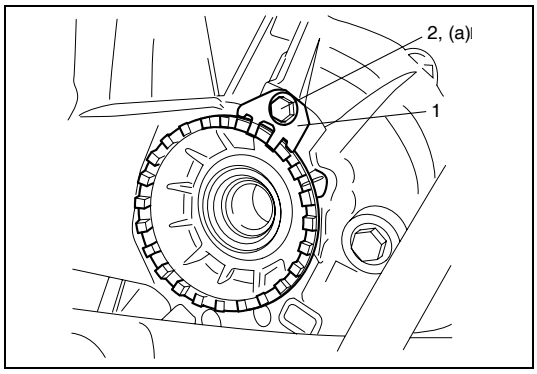

5) Install retaining ring lock plate (1) and then tighten lock plate bolt (2) with specified torque.

Tightening torque
Lock plate bolt (a): 9 N·m (0.9 kg-m, 6.5 lb-ft)

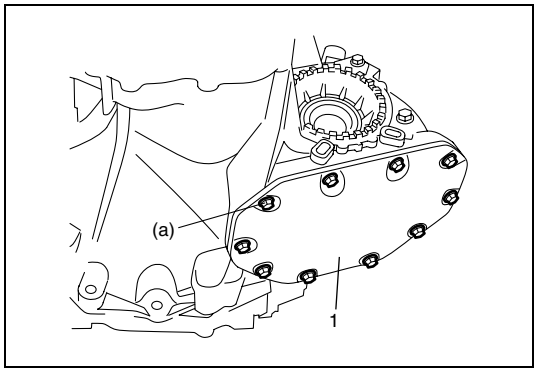

6) Install differential cover (1) and new gasket to transaxle case.

Tightening torque
Differential cover bolt (a): 18 N·m (1.8 kg-m, 13.0 lb-ft)

7) Install left side oil seal referring to “Differential Side Oil Seal Replacement” in this section.
8) Install differential side oil seal referring to “Differential Side Oil Seal Replacement” in this section.

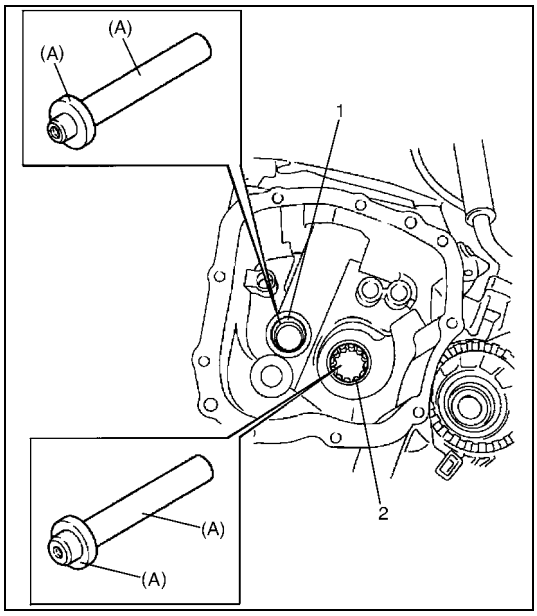

9) Install pinion needle bearing (1) to transaxle case using special tools.

Special tool
(A): 09925-18620

10) Install main shaft roller bearing (2) to transaxle case using special tools.

Special tool
(A): 09925-18620

Differential Components

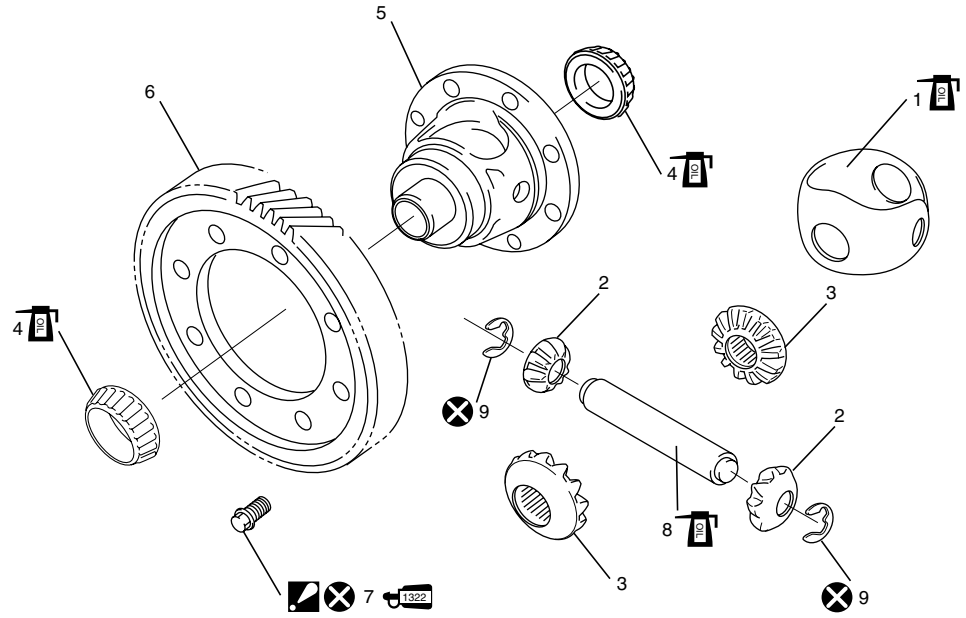

1. Plastic cage	7.	Final gear bolt : Tighten to 70 N·m (7.0 kg-m), 30° and 15° by the specified procedure. : Apply thread lock 99000-32110 to all around thread part of bolt.
2. Differential side pinion gear	8.	Differential pinion shaft
3. Differential side gear	9.	Differential pinion shaft washer
4. Differential side bearing		Do not reuse.
5. Differential case		Apply transaxle oil.
6. Final gear		

Differential Disassembly and Assembly

Disassembly

1) Remove oil seal referring to “Differential Side Oil Seal Replacement” in this section, if necessary.
2) Remove differential assembly referring to “Transaxle Case Disassembly and Assembly” in this section.

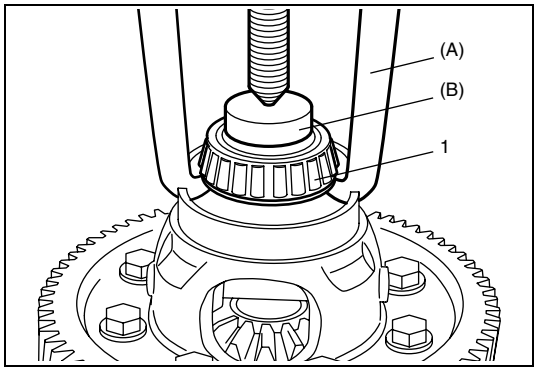

3) Remove right side differential side bearing (1) using special tools.

Special tool
(A): 09913-65135
(B): 09925-88210

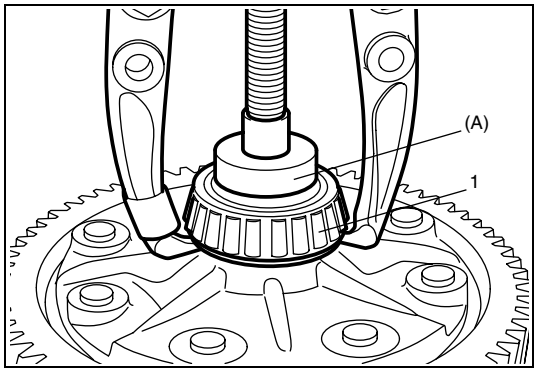

4) Remove left side differential side bearing (1) using special tool and puller.

Special tool
(A): 09925-88210

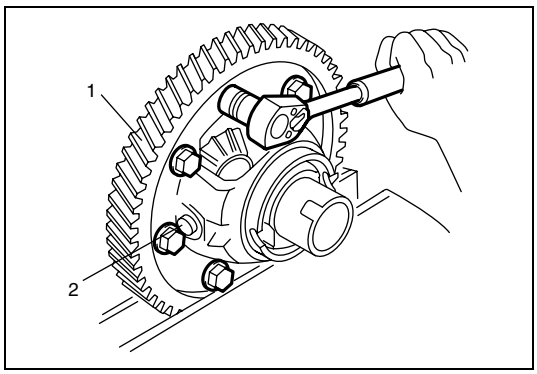

5) Hold differential gear assembly (1) with soft jawed vise. Remove final gear bolts and then take out final gear.
6) Remove pinion shaft washer from pinion shaft (2). Drive out pinion shaft and then disassemble components parts.

Assembly

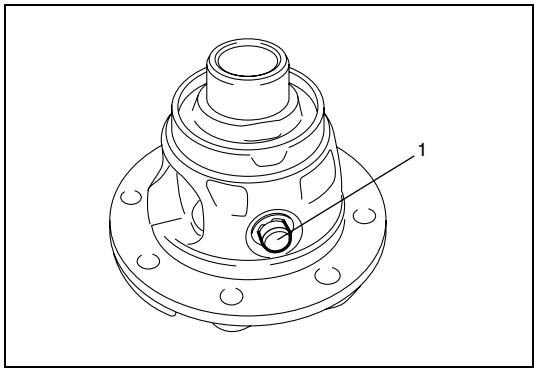

1) Assemble component parts.
2) Drive in pinion shaft (1) and then install new pinion shaft washer to pinion shaft.

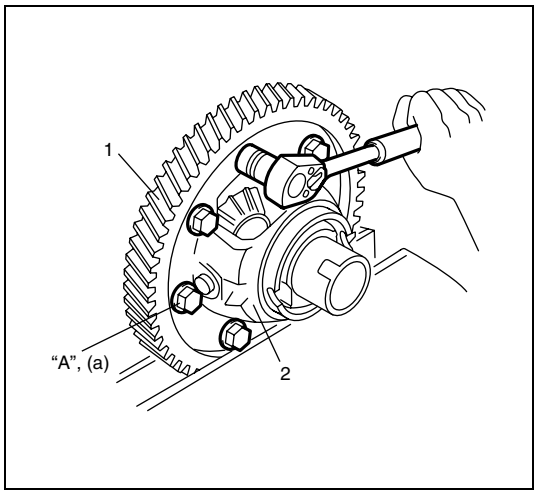

3) Hold final gear (1) with soft jawed vise, install differential case (2) and then tighten new bolts with thread lock cement applied to specified torque.

"A": Thread lock cement 99000-32110

Tightening torque
Final gear bolt (a): 70 N·m (7.0 kg-m, 51.0 lb-ft), 30° and 15° by the specified procedure.

CAUTION:
Main shaft and final gear must be replaced as a set when either replacement becomes necessary.

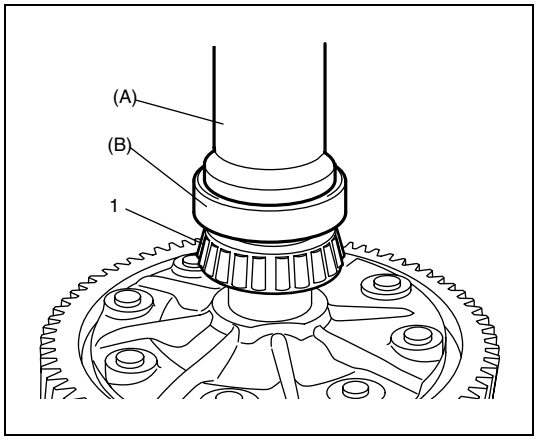

4) Press-fit differential side bearings (right and left) (1) using special tools and hydraulic press.

Special tool
(A): 09913-70123
(B): 09924-07730

CAUTION:
Do not mix differential side bearing outer races of left and right sides.

5) Install differential assembly and differential bearing retaining ring referring to "Transaxle Case Disassembly and Assembly" in this section.
6) Install oil seal referring to "Differential Side Oil Seal Replacement" in this section.

Differential Adjustment

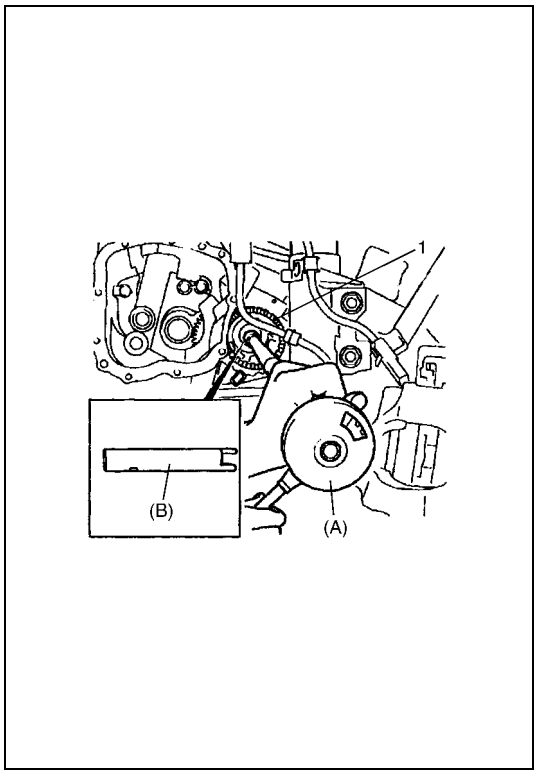

Adjust differential rotating torque to specified value below by tightening or loosening differential bearing retaining ring (1), using special tools.

Special tool
(A): 09922-78610
(B): 09922-78620

Maintain specified rotating torque at test speed of 1 revolution per second.

Repair case	Rotating torque (N·cm)
Reuse all removed parts.	(Set bearing ring to mark)
Reusing bearing, replacement of differential retaining ring, differential assembly or transaxle case.	60 – 100 (6 – 10 kg-cm, 5.25 – 8.65 lb-in)
Bearing as new part.	150 – 210 (15 – 21 kg-cm, 13.05 – 18.25 lb-in)

Tightening Torque Specification

Fastening part	Tightening torque		
	N•m	kg-m	lb-ft
Differential cover bolt	18	1.8	13.0
Transaxle oil level plug	4 N·m (0.4 kg-m, 3.0 lb-ft) and 45° to 135° by the specified procedure.		
Breather plug	4 N·m (0.4 kg-m, 3.0 lb-ft) and 180° by the specified procedure.		
Gear shift control lever bolt	5	0.5	3.5
Reverse lamp switch	20	2.0	15.0
Selector lever cover bolt	15	1.5	11.0
5th gear selector fork bolt	22	2.2	16.0
Extension case cover bolt (torx)	29	2.9	21.0
Extension case cover bolt	12	1.2	8.5
Engine rear mounting bolt	55	5.5	40.0
Engine rear mounting bracket bolt	55	5.5	40.0
Transaxle to engine bracket No.1 bolt	40	4.0	30.0
Transaxle to engine bracket No.2 bolt	30	3.0	22.0
Transaxle case bolt	60	6.0	45.0
Engine left mounting bolt	55	5.5	40.0
Gear shift rod connector bolt	7	0.7	5.0
5th gear pawl bolt	7	0.7	5.0
Bearing plate case bolt	22	2.2	16.0
Lock plate bolt	9	0.9	6.5
Differential cover bolt	18	1.8	13.0
Final gear bolt	70 N·m (7.0 kg-m, 51.0 lb-ft), 30° and 15° by the specified procedure.		
Cable grommet bolt	9	0.9	6.5
Control bracket bolt	12	1.2	8.5

Required Service Material

Material	Recommended SUZUKI product or specification	Use
Lithium grease	SUZUKI SUPER GREASE A (99000-25010)	• Oil seal lips
Thread lock cement	THREAD LOCK 1322 (99000-32110)	• Select lever cover bolts • Final gear bolts

Special Tool

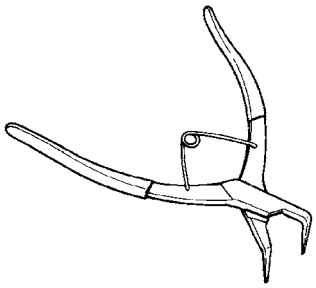 09900-06105 Snap ring pliers (closing type)	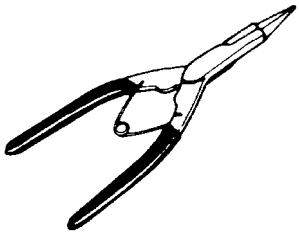 09900-06107 Snap ring pliers (Opening type)	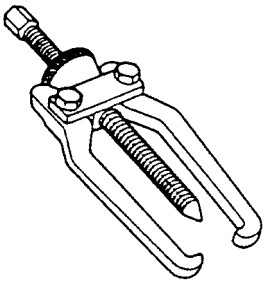 09913-65135 Bearing puller	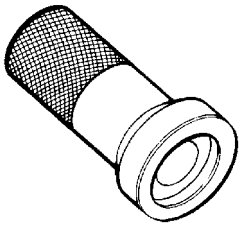 09913-70123 Bearing installer
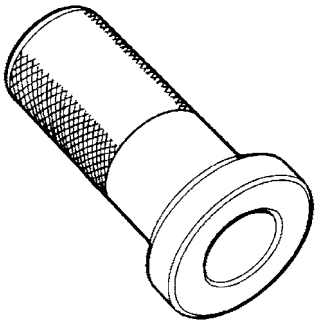 09913-75810 Bearing installer	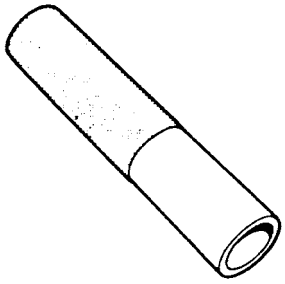 09913-84510 Bearing installer	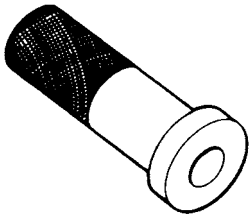 09913-85210-000 Bearing pulling holder	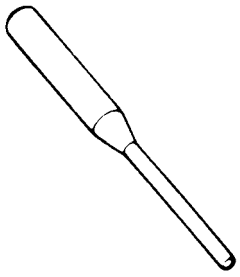 09922-89810 Spring pin remover
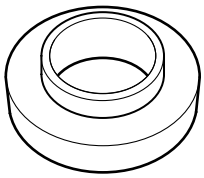 09924-07710 Synchronizer hub installer	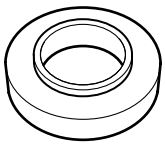 09924-07720 Synchronizer hub installer	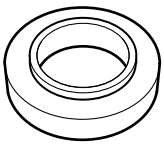 09924-07730-000 Bearing installer	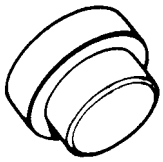 09925-88210 Bearing puller attachment
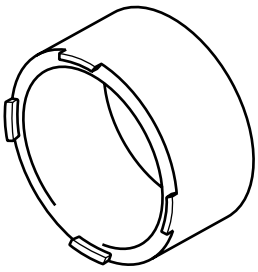 09919-08610 (KM-303) Support base	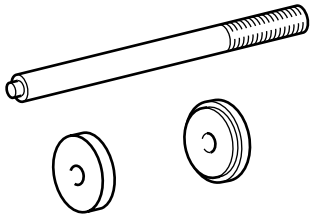 09925-68630 (KM-304) Bearing remover / installer	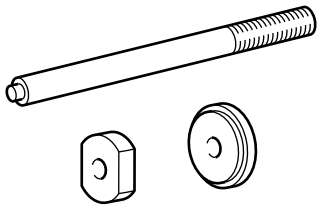 09925-68620 (KM-305) Bearing remover / installer	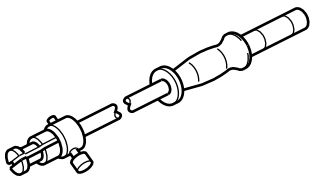 09922-48620 (KM-328-B) Locking bush remover

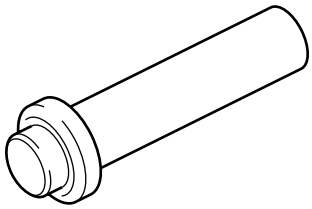 09926-28610 (KM-446) Oil seal installer	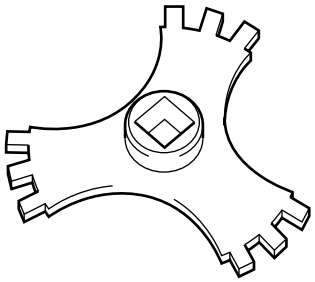 09925-18610 (KM-447) Differential bearing retaining ring remover / installer	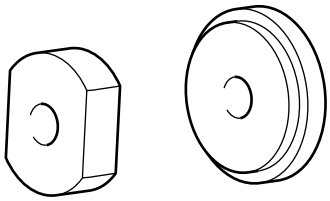 09925-68610 (KM-451) Outer race remover / installer	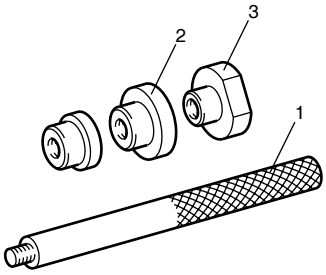 09925-18620 (KM-454-B) Oil seal remover / installer (See NOTE "A")
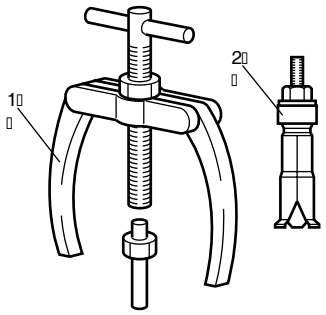 09925-08610 (KM-556-A) Bearing puller set (See NOTE "B")	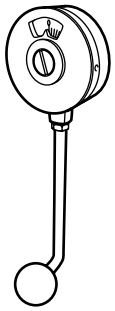 09922-78610 (MKM-536-A) Friction coefficient meter	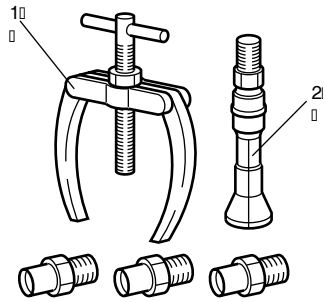 09913-58610 (KM-557-B) Oil seal puller set (See NOTE "C")	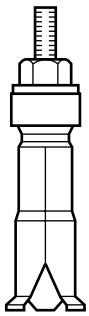 09926-58610 (MKM-599) Bearing remover
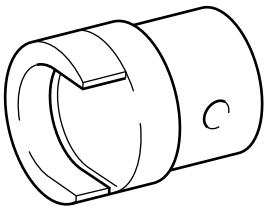 09922-48610 (KM-727) Locking bush remover	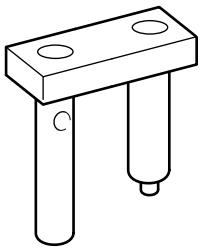 09922-68610 (KM-6335) Transaxle shaft thrust piece	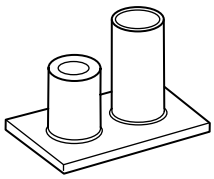 09922-58620 (KM-6337) Transaxle shaft installer	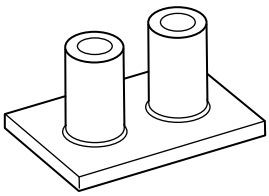 09922-58610 (KM-6338) Transaxle shaft installer

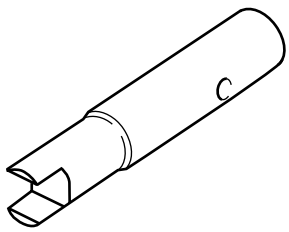

09922-78620
(KM-6037)
Adapter

NOTE:

- **"A": Oil seal remover / installer 09925-18620 (KM-454) includes 1. KM-454-4, 2. KM-454-2 and 3. KM-454-3.**
- **"B": Bearing puller set 09925-08610 (KM-556-A) includes 1. KM-556-A and 2. KM-556-2.**
- **"C": Oil seal puller set 09913-58610 (MKM-557-A) includes 1. MKM-557-1 and 2. MKM-557-2A.**

SECTION 7C3

CLUTCH (Z13DT ENGINE MODEL)

WARNING:

For vehicles equipped with a Supplemental Restraint (Air Bag) System:

- **Service on and around the air bag system components or wiring must be performed only by an authorized SUZUKI dealer. Refer to "Air Bag System Components and Wiring Location View" under "General Description" in air bag system section in order to confirm whether you are performing service on or near the air bag system components or wiring. Please observe all WARNINGS and "Service Precautions" under "On-Vehicle Service" in air bag system section before performing service on or around the air bag system components or wiring. Failure to follow WARNINGS could result in unintentional activation of the system or could render the system inoperative. Either of these two conditions may result in severe injury.**
- **Technical service work must be started at least 90 seconds after the ignition switch is turned to the "LOCK" position and the negative cable is disconnected from the battery. Otherwise, the system may be activated by reserve energy in the Sensing and Diagnostic Module (SDM).**

CONTENTS

General Description 7C3-2
Diagnosis 7C3-2
Diagnosis Table 7C3-2
On-Vehicle Service 7C3-3
Clutch Cable Components 7C3-3
Clutch Cable Removal and Installation 7C3-4
Clutch Cable Inspection 7C3-6
Clutch Cable Adjustment 7C3-6
Clutch Pedal and Clutch Pedal Bracket Components 7C3-7
Unit Repair Overhaul 7C3-9
Clutch Cover and Clutch Disc Components 7C3-9
Clutch Cover and Clutch Disc Removal and Installation 7C3-10
Clutch Cover and Clutch Disc Inspection 7C3-11
Clutch cover 7C3-11
Clutch Release Mechanism Removal and Installation 7C3-11
Clutch Release Mechanism Inspection 7C3-12
Clutch release shaft 7C3-12
Tightening Torque Specification 7C3-13
Required Service Material 7C3-13
Special Tool 7C3-13

General Description

The clutch is a diaphragm-spring clutch of a dry single disc type. The diaphragm spring is of a tapering-finger type, which is a solid ring in the outer diameter part, with a series of tapered fingers pointing inward.

The disc, carrying torsional spring, is positioned on the transaxle cluster gear with an involute spline fit.

The clutch cover is secured to the flywheel, and carries the diaphragm spring in such a way that the peripheral edge part of the spring pushes on the pressure plate against the flywheel (with the disc in between), when the clutch release bearing is held back. This is the engaged condition of the clutch.
Depressing the clutch pedal causes the release bearing to advance and pushes on the tips of the tapered fingers of the diaphragm spring. When this happens, the diaphragm spring pulls the pressure plate away from the flywheel, thereby interrupting the flow of drive from flywheel through clutch disc to transaxle cluster gear.

Diagnosis

Diagnosis Table

Condition	Possible Cause	Correction
Slipping	Maladjusted clutch cable	Adjust clutch cable.
	Worn or oily clutch disc facing	Replace disc.
	Warped disc, pressure plate or flywheel surface	Replace disc, clutch cover or flywheel.
	Weakened diaphragm spring	Replace clutch cover.
	Rusted clutch cable	Replace cable.
Dragging clutch	Maladjusted clutch cable	Adjust clutch cable.
	Weakened diaphragm spring, or worn spring tip	Replace clutch cover.
	Rusted cluster gear splines	Lubricate.
	Damaged or worn splines of cluster gear	Replace cluster gear.
	Excessively wobbly clutch disc	Replace disc.
	Clutch facings broken or dirty with oil	Replace disc.
Clutch vibration	Glazed (glass-like) clutch facings	Repair or replace disc.
	Clutch facings dirty with oil	Replace disc.
	Release bearing slides unsmoothly on cluster gear	Lubricate or replace cluster gear.
	Wobbly clutch disc, or poor facing contact	Replace disc.
	Weakened damper in flywheel	Replace flywheel.
	Clutch disc rivets loose	Replace disc.
	Distorted pressure plate or flywheel surface	Replace clutch cover or flywheel.
	Weakened engine mounting or loosened engine mounting bolt or nut	Retighten or replace mounting.
Noisy clutch	Worn or broken release bearing	Replace release bearing.
	Excessive rattle of clutch disc hub	Replace disc.
	Cracked clutch disc	Replace disc.
	Pressure plate and diaphragm spring rattling	Replace clutch cover.
Grabbing clutch	Clutch disc facings soaked with oil	Replace disc.
	Clutch disc facings excessively worn	Replace disc.
	Rivet heads showing out of facing	Replace disc.
	Weakened damper in flywheel	Replace flywheel.

On-Vehicle Service

Clutch Cable Components

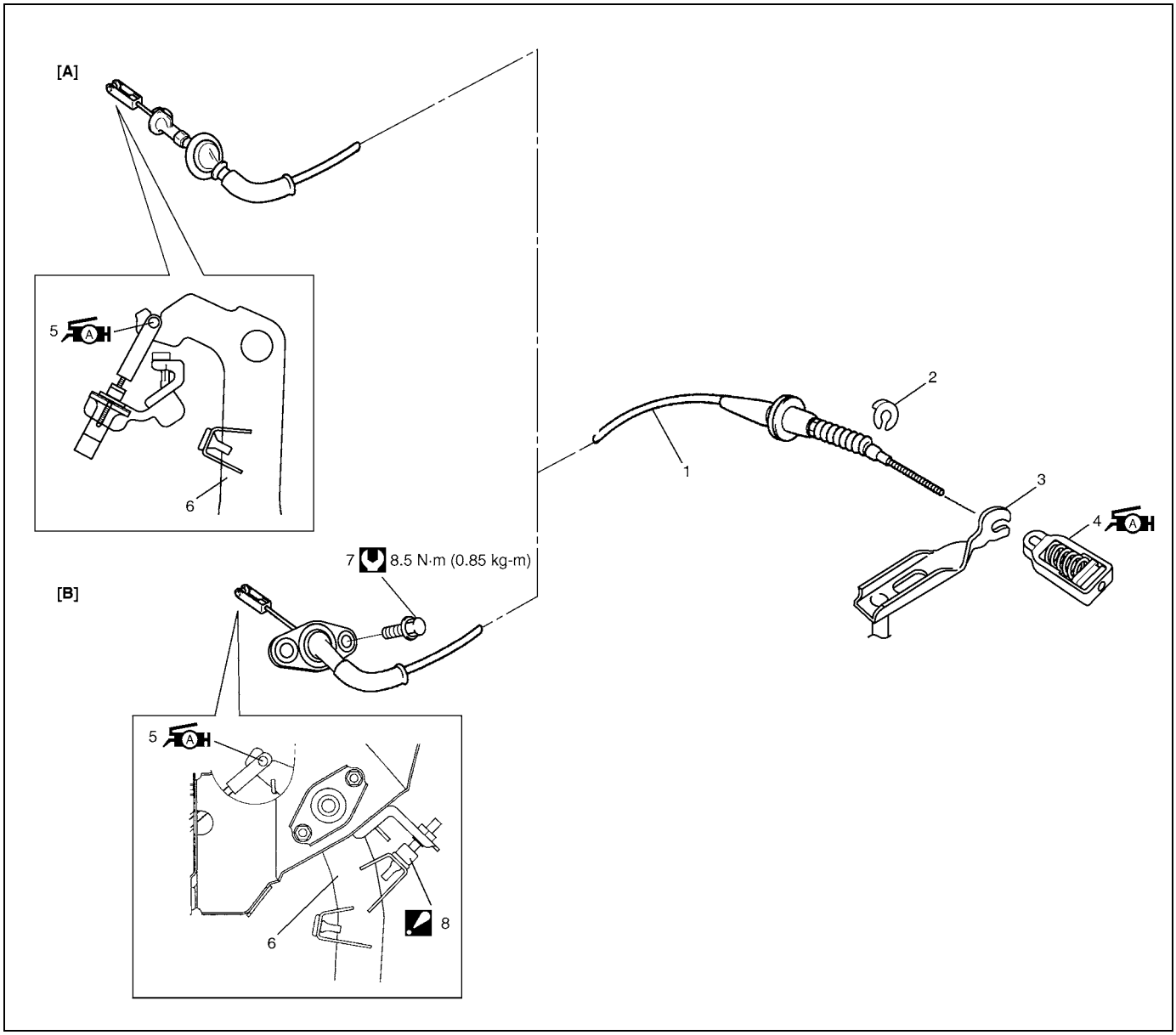

[A]: For RM413D	4. Clutch cable nut : Apply grease 99000-25010 to clutch cable nut.
[B]: For RB413D	5. Clutch cable hook : Apply grease 99000-25010 to cable hook.
1. Clutch cable	6. Clutch pedal
2. Joint washer	7. Clutch cable outer bolt
3. Clutch release shaft	8. Clutch pedal stop bolt : Never loosen clutch pedal stop bolt.

Clutch Cable Removal and Installation

Removal

1) Disconnect negative cable at battery.

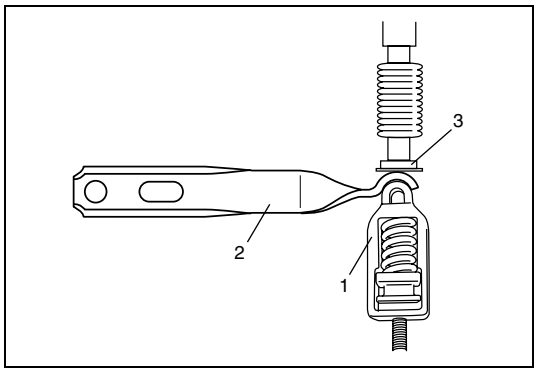

2) Remove joint washer (3) from clutch cable.
3) Loosen clutch cable nut (1) and remove clutch cable from clutch release shaft (2).
4) Detach clutch cable from clutch cable bracket.

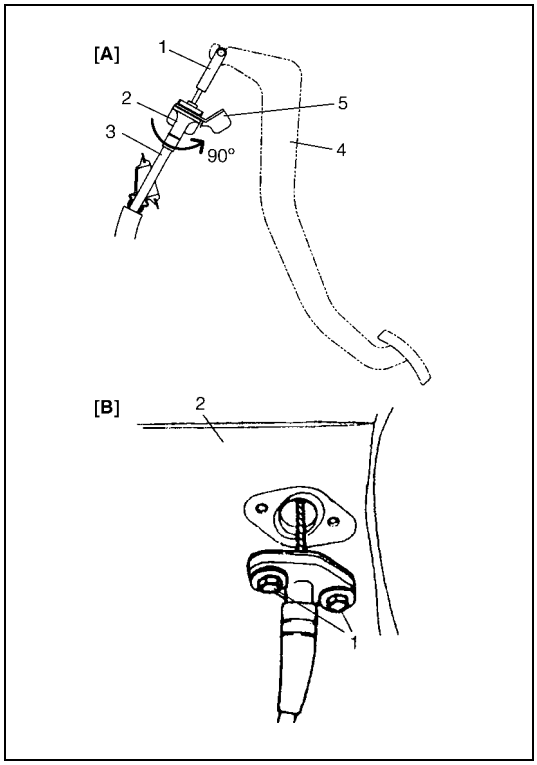

5) Remove clutch cable as follows.

For RM413D [A]

a) Disconnect cable hook (1) from clutch pedal (4).
b) Remove clutch cable (3) from clutch pedal bracket (5) by turning cable cap (2) about 90° as shown.

For RB413D [B]

a) Remove clutch cable outer bolt (1) at dash panel (2) in engine room.
b) Disconnect cable hook from clutch pedal, then take off cable.

Installation

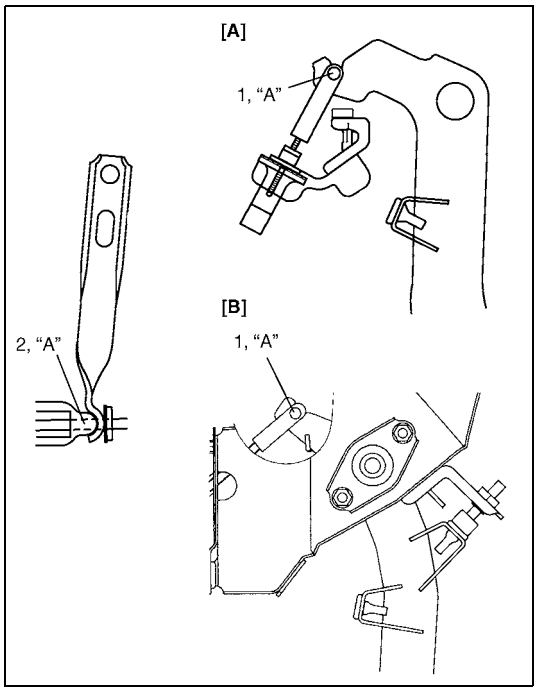

1) Apply grease to contact surfaces of clutch cable nut (2) and cable hook (1) before installing cable.

"A": Grease 99000-25010

2) Hook cable end with pedal using screwdriver or long nose pliers from cabin inside.

[A]: For RM413D
[B]: For RB413D

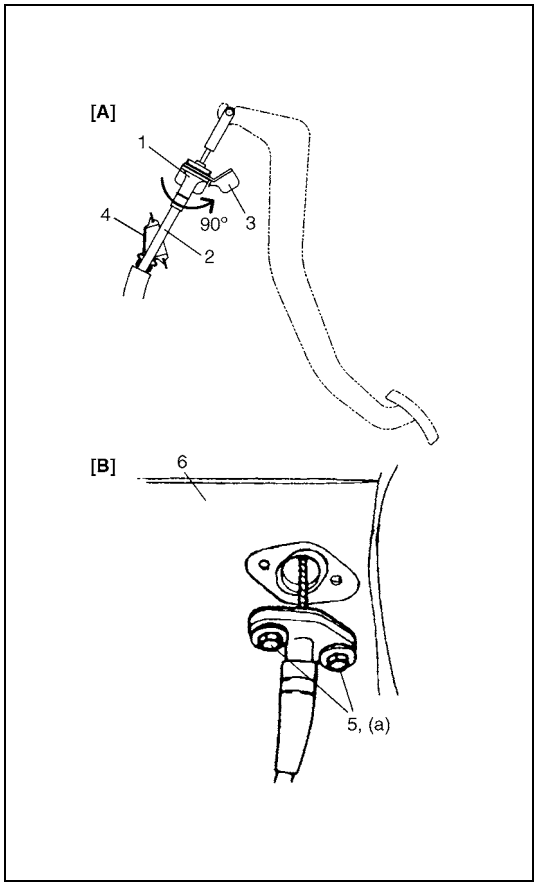

3) Install clutch cable as follows.

For RM413D [A]

a) Install clutch cable (2) to clutch pedal bracket (3) by turning cable cap (1) about 90° as shown.

For RB413D [B]

a) Fasten cable with 2 bolts (5) to dash panel (6).

Tightening torque
Clutch cable outer bolt
(a): 8.5 N·m (0.85 kg-m, 6.0 lb-ft)

4) Install clutch cable to clutch cable bracket.
5) Join clutch cable to clutch cable nut, then install clutch cable nut to release shaft.
6) Screw in clutch cable nut and adjust clutch cable referring to "Clutch Cable Adjustment" in this section.

NOTE:

Take care that cable grommet (4) has specific installing direction as shown in the figure.

7) Connect negative cable at battery.
8) Check clutch for proper function with engine running.

Clutch Cable Inspection

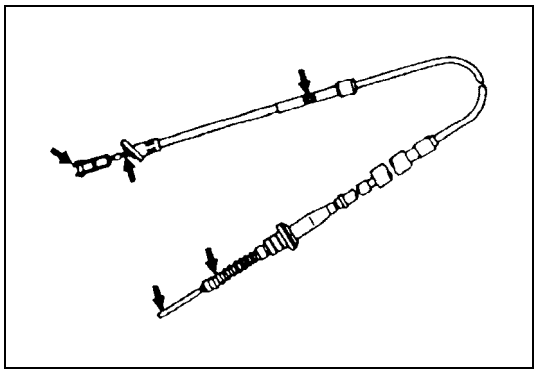

Inspect clutch cable and replace it for any of the following conditions.

- Excessive cable friction
- Frayed cable
- Bent or kinked cable
- Broken boots
- Worn end

Clutch Cable Adjustment

1) Remove joint washer from clutch cable.

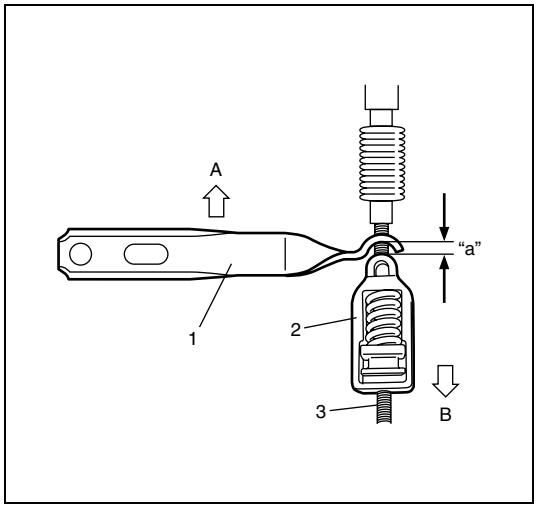

2) Check clearance "a" under the condition a) and b), and adjust it to specified clearance turning cable nut (2) if it is out of the specification.
   a) push release shaft (1) in the direction "A" until release shaft play disappears.
   b) Pull at clutch cable (3) in the direction "B".

Clearance (for used cable)
"a": 4 – 6 mm (0.16 – 0.24 in.)

NOTE:

When replacing clutch cable with a new one, adjust clearance to 2 – 4 mm (0.08 – 0.16 in.).

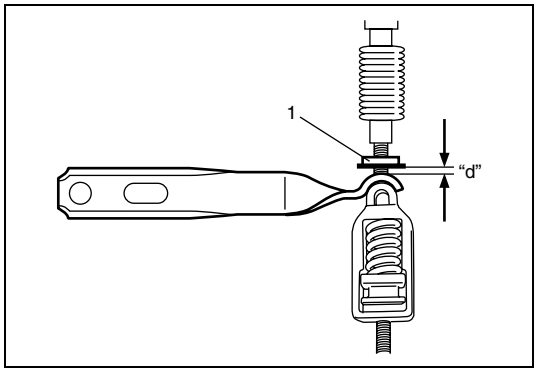

3) Install joint washer (1) to the specified position.

Joint washer installation position
"d": 0 – 2 mm (0 – 0.08 in.)

Clutch Pedal and Clutch Pedal Bracket Components

For RM413D

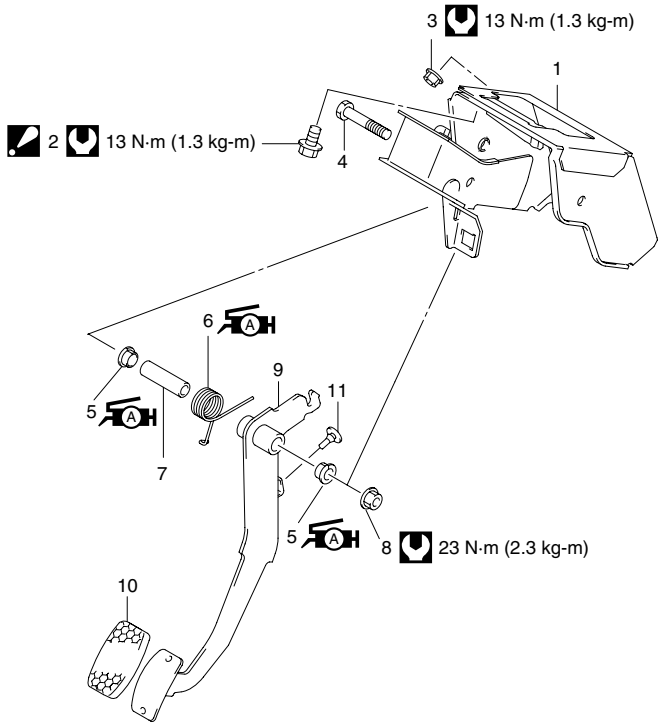

	1. Clutch pedal bracket	7. Pedal spacer
	2. Pedal bracket bolt : Pedal bracket bolt must be tighten after pedal bracket nut.	8. Pedal shaft nut
	3. Pedal bracket nut	9. Clutch pedal
	4. Pedal shaft bolt	10. Pedal pad
	5. Pedal bush : Apply grease 99000-25010 to inside and outside surface of spacer.	11. Pedal cushion
	6. Pedal spring : Apply grease 99000-25010 to inside surface of spring.	Tightening torque

For RB413D

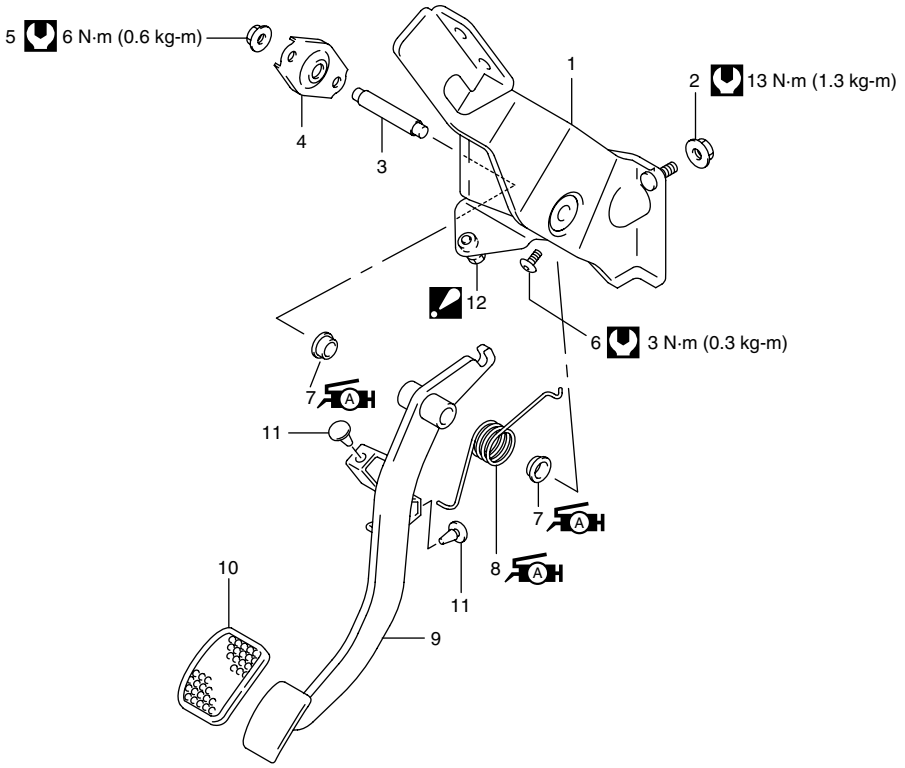

	1. Clutch pedal bracket		8. Pedal spring : Apply grease 99000-25010 to inside surface of spring.
	2. Pedal bracket nut		9. Clutch pedal
	3. Pedal shaft		10. Pedal pad
	4. Pedal shaft bracket		11. Pedal cushion
	5. Pedal shaft bracket nut		12. Clutch pedal stop bolt : Never loosen clutch pedal stop bolt.
	6. Bracket screw		Tightening torque
	7. Pedal bush : Apply grease 99000-25010 to inside and outside surface of spacer.		

Unit Repair Overhaul

Clutch Cover and Clutch Disc Components

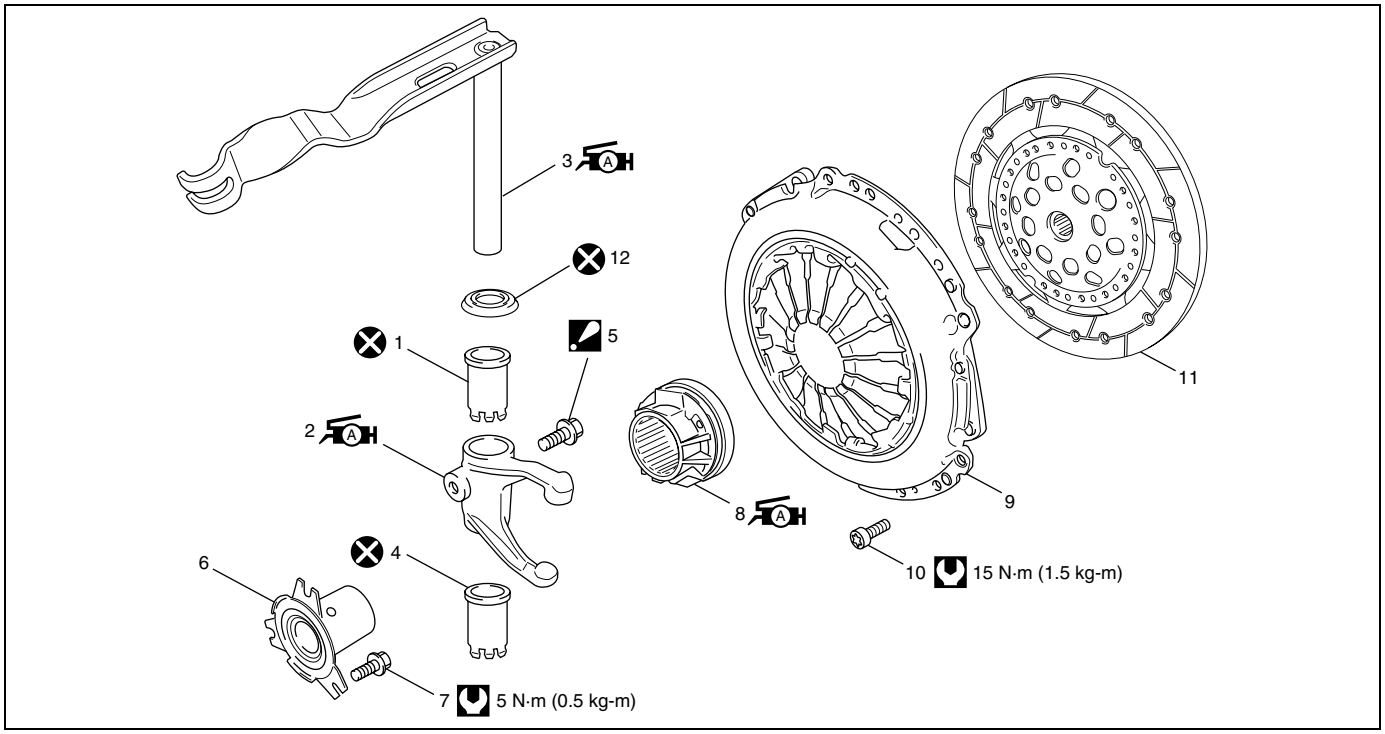

	1. Clutch release shaft No.1 bush		8. Release shaft bearing : Apply grease 99000-25010 to joint of bearing and release shaft and also bearing inside.
	2. Clutch release fork : Apply grease 99000-25010 to release fork end. (3 g (0.1 oz))		9. Clutch cover
	3. Clutch release shaft : Apply grease 99000-25010 to the end of release shaft. (0.12 – 0.36 g (0.004 – 0.010 oz))		10. Clutch cover bolt
	4. Clutch release shaft No.2 bush		11. Clutch disc
	5. Clutch release fork bolt : Tighten 25 N·m (2.5 kg-m, 18.0 lb-ft), 90° and 15° by the specified procedure.		12. Clutch release shaft collar
	6. Cluster gear cover		Tightening torque
	7. Cluster gear cover bolt		Do not reuse.

Clutch Cover and Clutch Disc Removal and Installation

Removal

1) Dismount transaxle assembly referring to “Transaxle Unit Dismounting and Remounting” in Section 7A3.

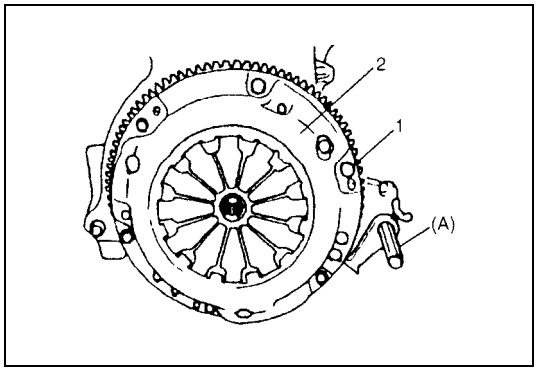

2) Hold flywheel with special tool and remove clutch cover bolts (1), clutch cover (2) and clutch disc.

Special tool
(A): 09924-17810

Installation

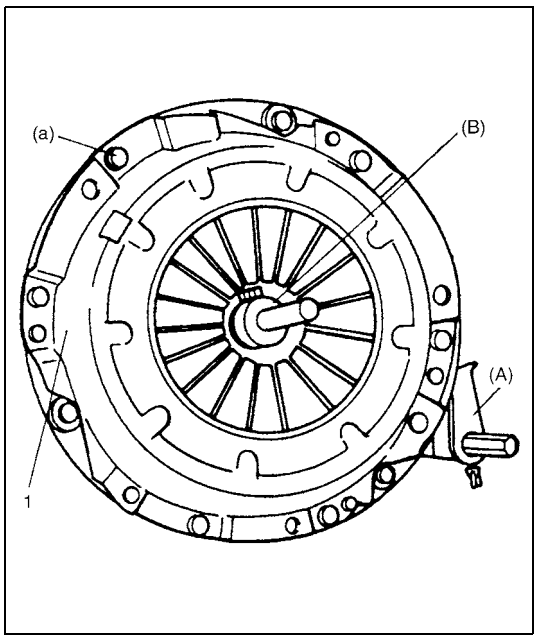

1) Aligning clutch disc to flywheel center using special tool, install clutch cover (1) and bolts. Then tighten bolts to specification.

NOTE:

- **While tightening clutch cover bolts, compress clutch disc with special tool (B) by hand so that disc centered.**
- **Tighten cover bolts little by little evenly in diagonal order.**

Special tool
(A): 09924-17810
(B): 09923-36320

Tightening torque
Clutch cover bolt (a): 15 N·m (1.5 kg-m, 11.0 lb-ft)

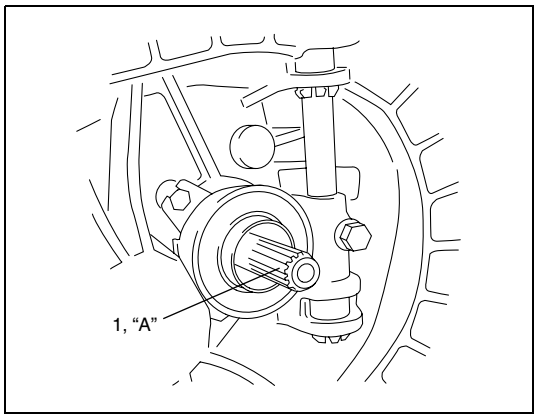

2) Slightly apply grease to cluster gear (1), then join transaxle assembly with engine referring to “Transaxle Unit Dismounting and Remounting” in Section 7A3.

“A”: Grease 99000-25210

NOTE:

When inserting transaxle cluster gear to clutch disc, turn crankshaft little by little to match splines.

Clutch Cover Inspection

Clutch cover

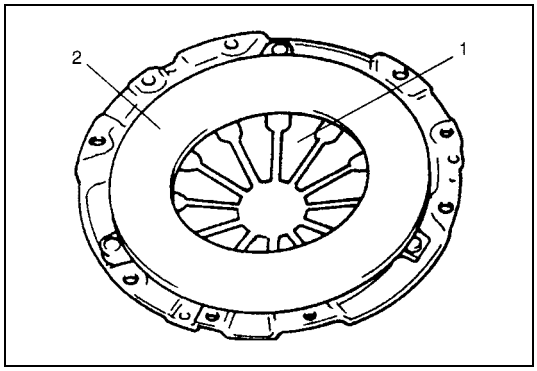

1) Check diaphragm spring (1) for abnormal wear or damage.
2) Inspect pressure plate (2) for wear or heat spots.
3) If abnormality is found, replace clutch cover. Do not disassemble it into diaphragm spring (1) and pressure plate (2).

Clutch Release Mechanism Removal and Installation

Removal

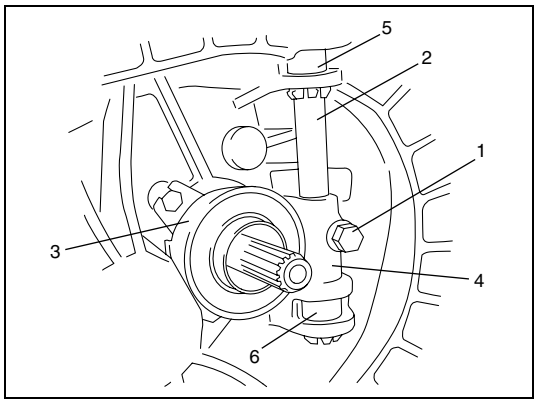

1) Remove clutch release fork bolt (1) and then drive out clutch release shaft (2).
2) Remove release shaft bearing (3) and clutch release fork (4).
3) Drive out clutch release shaft No.1 bush (5) and clutch release shaft No.2 bush (6) from transaxle case.

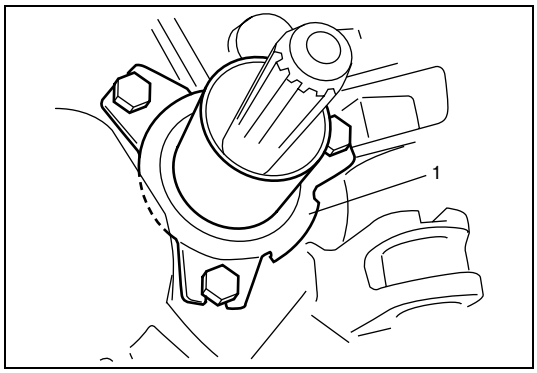

4) Remove cluster gear cover (1).

Installation

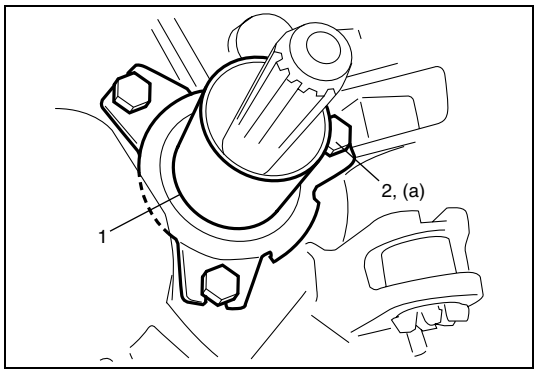

1) Install cluster gear cover (1) and tighten bolt (2) to specified torque.

Tightening torque
Cluster gear cover bolt (a): 5 N·m (0.5 kg-m, 3.5 lb-ft)

2) Drive in clutch release shaft No.1 and No.2 bushes into transaxle case.
3) Install release shaft bearing and release fork.

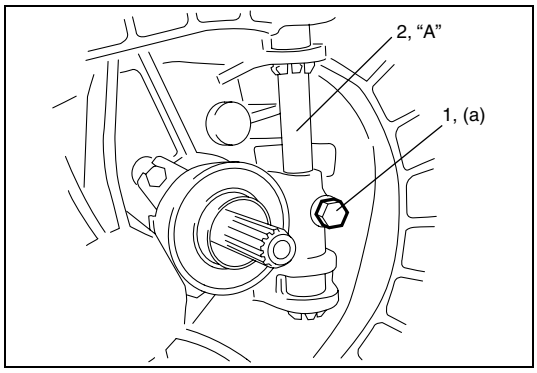

4) Apply grease to clutch release shaft (2) and then install clutch release shaft and tighten fork bolt (1) to specified torque.

"A": Grease 99000-25010

Tightening torque
Clutch release fork bolt
(a): Tighten 25 N·m (2.5 kg-m, 18.0 lb-ft), 90° and 15° by the specified procedure.

Clutch Release Mechanism Inspection

Clutch release shaft

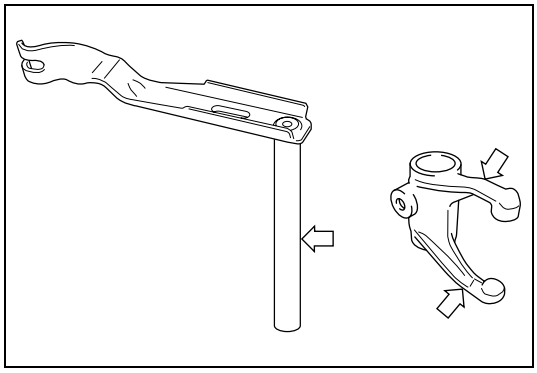

Check clutch release shaft and clutch release fork for deflection or damage.
If abnormality is found, replace it.

Tightening Torque Specification

Fastening part	Tightening torque		
	N•m	kg-m	lb-ft
Clutch cover bolt	15	1.5	11.0
Cluster gear cover bolt	5	0.5	3.5
Clutch release fork bolt	Tighten 25 N·m (2.5 kg-m, 18.0 lb-ft), 90° and 15° by the specified procedure.		
Pedal bracket bolt (for RM413D)	13	1.3	9.5
Pedal bracket nut	13	1.3	9.5
Pedal shaft nut (for RM413D)	23	2.3	16.5
Clutch cable outer bolt (for RB413D)	8.5	0.85	6.0
Pedal shaft bracket nut (for RB413D)	6	0.6	4.0
Bracket screw (for RB413D)	3	0.3	2.0

Required Service Material

Material	Recommended SUZUKI product (Part Number)	Use
Lithium grease	SUZUKI SUPER GREASE A (99000-25010)	• Cable hook and cable nut. • Release fork. • Release shaft. • Release bearing inside. • Pedal spring. • Pedal bush.
	SUZUKI SUPER GREASE I (99000-25210)	Cluster gear spline.

Special Tool

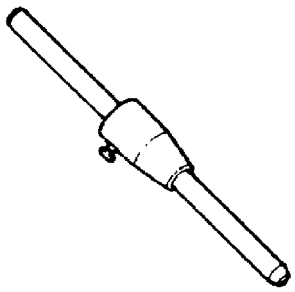	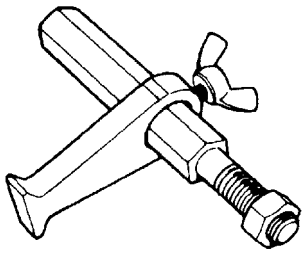
09923-36320 Clutch center guide	09924-17810 Flywheel holder

Prepared by
MAGYAR SUZUKI CORPORATION

1st Ed. August, 2004

Printed in Hungary

Printing: 594

IMPORTANT

WARNING/CAUTION/NOTE

Please read this manual and follow its instructions carefully. To emphasize special information, the words **WARNING, CAUTION** and **NOTE** have special meanings. Pay special attention to the messages highlighted by these signal words.

WARNING:
Indicates a potential hazard that could result in death or injury.

CAUTION:
Indicates a potential hazard that could result in vehicle damage.

NOTE:
Indicates special information to make maintenance easier or instructions clearer.

WARNING:
This service manual is intended for authorized Suzuki dealers and qualified service mechanics only. Inexperienced mechanics or mechanics without the proper tools and equipment may not be able to properly perform the services described in this manual.
Improper repair may result in injury to the mechanic and may render the vehicle unsafe for the driver and passengers.

WARNING:
For vehicles equipped with a Supplemental Restraint (Air Bag) System:

- **Service on and around the air bag system components or wiring must be performed only by an authorized SUZUKI dealer. Refer to "System Components and Wiring Location View" under "General Description" in air bag system section in order to confirm whether you are performing service on or near the air bag system components or wiring. Please observe all WARNINGS and "Service Precautions" under "On-Vehicle Service" in air bag system section before performing service on or around the air bag system components or wiring. Failure to follow WARNINGS could result in unintentional activation of the system or could render the system inoperative. Either of these two conditions may result in severe injury.**
- **If the air bag system and another vehicle system both need repair, Suzuki recommends that the air bag system be repaired first, to help avoid unintended air bag system activation.**
- **Do not modify the steering wheel, instrument panel or any other air bag system component (on or around air bag system components or wiring). Modifications can adversely affect air bag system performance and lead to injury.**
- **If the vehicle will be exposed to temperatures over 93°C (200°F) (for example, during a paint baking process), remove the air bag system components beforehand to avoid component damage or unintended activation.**

The circle with a slash in this manual means "Do not do this" or "Do not let this happen".

FOREWORD

This manual contains procedures for diagnosis, maintenance, adjustments, minor service operations, replacement of components (Service) and for disassembly and assembly of major components (Unit Repair-Overhaul).

Applicable model: RM413

The contents are classified into sections each of which is given a section number as indicated in the Table of Contents on following page. And on the first page of each individual section is an index of that section.
This manual should be kept in a handy place for ready reference of the service work.
Strict observance of the so specified items will enable one to obtain the full performance of the vehicle.

When replacing parts or servicing by disassembling, it is recommended to use SUZUKI genuine parts, tools and service materials (lubricant, sealants, etc.) as specified in each description.

All information, illustrations and specifications contained in this literature are based on the latest product information available at the time of publication approval. And used as the main subject of description is the vehicle of standard specifications among others.
Therefore, note that illustrations may differ from the vehicle being actually serviced.
The right is reserved to make changes at any time without notice.

RELATED MANUAL:

Manual Name	Manual No.
IGNIS (RM413/415/413D) Wiring Diagram Manual	99512U86G20-669

MAGYAR SUZUKI CORPORATION

© COPYRIGHT MAGYAR SUZUKI CORPORATION 2003

TABLE OF CONTENTS

GENERAL INFORMATION	
GENERAL INFORMATION	**0A**
MAINTENANCE AND LUBRICATION	**0B**
HEATING AND AIR CONDITIONING	
HEATER AND VENTILATION	**1A**
AIR CONDITIONING (OPTIONAL)	**1B**
STEERING, SUSPENSION, WHEELS AND TIRES	
STEERING, SUSPENSION, WHEELS AND TIRES	**3**
FRONT WHEEL ALIGNMENT	**3A**
MANUAL RACK AND PINION	**3B**
ELECTRICAL POWER STEERING (P/S) SYSTEM	**3B1**
STEERING WHEEL AND COLUMN	**3C**
FRONT SUSPENSION	**3D**
REAR SUSPENSION	**3E**
WHEELS AND TIRES	**3F**
DRIVE SHAFT AND PROPELLER SHAFT	
FRONT DRIVE SHAFT	**4A**
PROPELLER SHAFTS	**4B**
BRAKE SYSTEM	
BRAKES	**5**
BRAKES PIPE / HOSE / MASTER CYLINDER	**5A**
FRONT BRAKE	**5B**
PARKING AND REAR BRAKE	**5C**
ANTILOCK BRAKE SYSTEM (ABS)	**5E**

ENGINE	
ENGINE GENERAL INFORMATION AND DIAGNOSIS	**6**
ENGINE MECHANICAL (M13 ENGINE)	**6A1**
ENGINE COOLING	**6B**
ENGINE FUEL	**6C**
ENGINE AND EMISSION CONTROL SYSTEM	**6E1**
IGNITION SYSTEM (ELECTRONIC IGNITION SYSTEM)	**6F1**
CRANKING SYSTEM	**6G**
CHARGING SYSTEM	**6H**
EXHAUST SYSTEM	**6K**
TRANSMISSION, CLUTCH AND DIFFERENTIAL	
MANUAL TRANSAXLE	**7A1**
CLUTCH	**7C1**
TRANSFER	**7D**
REAR DIFFERENTIAL	**7F**
ELECTRICAL SYSTEM	
BODY ELECTRICAL SYSTEM	**8**
Wiring Diagram	**8A**
LIGHTING SYSTEM	**8B**
INSTRUMENTATION/DRIVER INFORMATION	**8C**
WINDOWS, MIRRORS, SECURITY AND LOCKS	**8D**
IMMOBILIZER CONTROL SYSTEM	**8G**
BODY SERVICE	**9**
RESTRAINT SYSTEM	
RESTRAINT SYSTEM	**10**
AIR BAG SYSTEM	**10B**

NOTE:

The screen toned Section 8A is in Wiring Diagram Manual mentioned in FOREWORD of this manual.

SECTION 0A

GENERAL INFORMATION

CONTENTS

How to Use This Manual 0A-2
Precautions 0A-3
Precaution for Vehicles Equipped with a Supplemental Restraint (Air Bag) System 0A-3
Diagnosis 0A-3
Servicing and handling 0A-4
General Precautions 0A-6
Precaution for Wheel (with Tire) Removal 0A-9
Precautions for Catalytic Converter 0A-9
Precaution for Installing Mobile Communication Equipment 0A-9
Precaution in Servicing Full-Time 4WD Vehicle 0A-9
Precautions for Electrical Circuit Service 0A-10
Electrical Circuit Inspection Procedure 0A-13
Open circuit check 0A-13
Continuity check 0A-14
Voltage check 0A-14
Short circuit check (wire harness to ground) 0A-15
Intermittent and Poor Connection 0A-15
Identification Information 0A-17
Vehicle Identification Number 0A-17
Engine Identification Number 0A-17
Warning, Caution and Information Labels 0A-18
Vehicle Lifting Points 0A-19
When using frame contact hoist 0A-19
When using floor jack 0A-20
Abbreviations and Symbols May be Used in This Manual 0A-21
Abbreviations 0A-21
Symbols 0A-23
Wire Color Symbols 0A-23
Fastener Information 0A-24
Metric Information 0A-24
Fastener Strength Identification 0A-25
Standard Tightening Torque 0A-25

How to Use This Manual

1) There is a “TABLE OF CONTENTS” on the third page of this manual, whereby you can easily find the section that offers the information you need. Also, there is a “Contents” on the first page of each section, where the main items in that section are listed.
2) Each section of this manual has its own pagination. It is indicated at the top of each page along with the Section name.
3) The special tool usage and torque specification are given as shown in the figure.

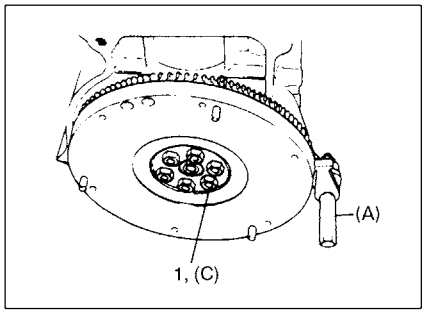

6) Install oil pump. Refer to “Oil pump” in this section.
7) Install flywheel (for M/T vehicle) or drive plate (for A/T vehicle). Using special tool, lock flywheel or drive plate, and tighten flywheel or drive plate bolts (1) to specified torque.

Special Tool
(A) : 09924-17810

Tightening Torque
(c) : 78 N·m (7.8 kg-m, 56.0 lb-ft)

4) A number of abbreviations and symbols are used in the text. For their full explanations, refer to “Abbreviations and Symbols May be Used in This Manual” in this section.
5) The SI, metric and foot-pound systems are used as units in this manual.
6) “Diagnosis” are included in each section as necessary.
7) At the end of each section, there are descriptions of “Special Tool”, “Required Service Material” and “Tightening Torque Specification” that should be used for the servicing work described in that section.

Precautions

Precaution for Vehicles Equipped with a Supplemental Restraint (Air Bag) System

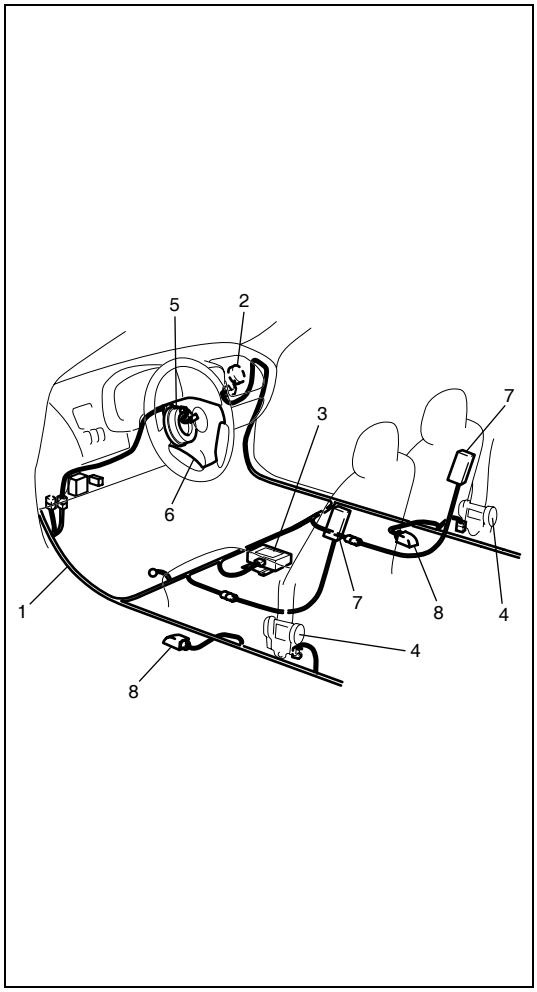

WARNING:

- **The configuration of air bag system parts are as shown in the figure. When it is necessary to service (remove, reinstall and inspect) these parts, be sure to follow procedures described in Section 10B. Failure to follow proper procedures could result in possible air bag system activation, personal injury, damage to parts or air bag system being unable to activate when necessary.**
- **If the air bag system and another vehicle system both need repair, SUZUKI recommends that the air bag system be repaired first, to help avoid unintended air bag system activation.**
- **Do not modify the steering wheel, dashboard, or any other air bag system components. Modifications can adversely affect air bag system performance and lead to injury.**
- **If the vehicle will be exposed to temperatures over 93°C (200°F) (for example, during a paint baking process), remove the air bag system components beforehand to avoid component damage or unintended air bag system activation.**

1. Air bag wire harness (in floor harness)	5. Contact coil
2. Passenger air bag (inflator) module	6. Driver air bag (inflator) module
3. SDM	7. Side air bag (inflator) module (if equipped)
4. Seat belt pretensioner	8. Side sensor (if equipped)

Diagnosis

- When troubleshooting air bag system, be sure to follow “Diagnosis” in Section 10B. Bypassing these procedures may result in extended diagnostic time, incorrect diagnosis, and incorrect parts replacement.
- Never use electrical test equipment other than that specified in this manual.

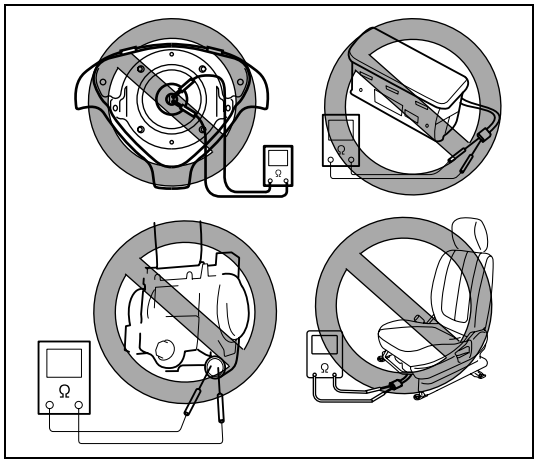

WARNING:

Never attempt to measure the resistance of the air bag (inflator) modules (driver, passenger and side) and seat belt pretensioners (driver and passenger). It is very dangerous as the electric current from the tester may deploy the air bag or activate the pretensioner.

Servicing and handling

[A]

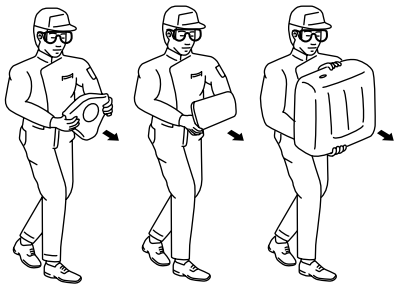

[B]

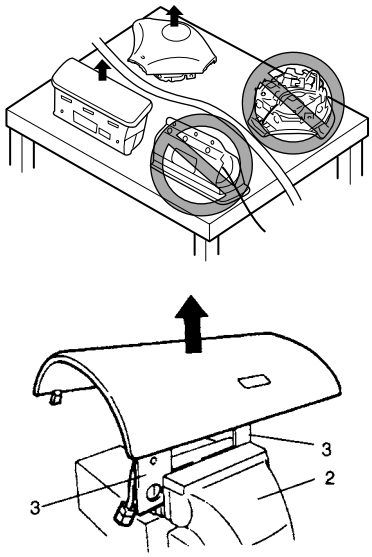

[C]

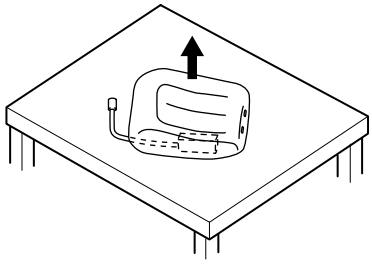

WARNING:

Many of service procedures require disconnection of "AIR BAG" fuse and all air bag (inflator) module(s) from initiator circuit to avoid an accidental deployment.

Driver, Passenger and side Air Bag (Inflator) Modules

- **For handling and storage of a live air bag (inflator) module, select a place where the ambient temperature below 65 °C (150 °F), without high humidity and away from electric noise.**
- **When carrying a live air bag (inflator) module, make sure the bag opening is pointed away from you. In case of an accidental deployment, the bag will then deploy with minimal chance of injury. Never carry the air bag (inflator) module by the wires or connector on the underside of the module. When placing a live air bag (inflator) module on a bench or other surface, always face the bag up, away from the surface. As the live passenger air bag (inflator) module must be placed with its bag (trim cover) facing up, place it on the workbench with a slit (1) or use the workbench vise (2) to hold it securely at its lower mounting bracket (3). The front seat back with the live air bag (inflator) module must be placed with its frontal seat cover facing up. It is also prohibited to place anything on top of the trim cover and stack air bag (inflator) modules. This is necessary so that a free space is provided to allow the air bag to expand in the unlikely event of accidental deployment. Otherwise, personal injury may result.**
- **Never dispose of live (undeployed) air bag (inflator) modules (driver, passenger and side). If disposal is necessary, be sure to deploy them according to deployment procedures described in Section 10B before disposal.**
- **The air bag (inflator) module immediately after deployment is very hot. Wait for at least half an hour to cool it off before proceeding the work.**
- **After an air bag (inflator) module has been deployed, the surface of the air bag may contain a powdery residue. This powder consists primarily of cornstarch (used to lubricate the bag as it inflates) and by-products of the chemical reaction. As with many service procedures, gloves and safety glasses should be worn.**

[A] :	Always carry air bag (inflator) module with trim cover (air bag opening) away from body.
[B] :	Always place air bag (inflator) module on workbench with trim cover (air bag opening) up, away from loose objects.
[C] :	Always place with its frontal seat cover facing up, away from loose objects.

WARNING:

SDM

- **For handling and storage of a SDM, select a place where the ambient temperature below 65°C (150°F), without high humidity and away from electric noise.**
- **During service procedures, be very careful when handling a Sensing and Diagnostic Module (SDM). Never strike or jar the SDM.**
- **Never power up the air bag system when the SDM is not rigidly attached to the vehicle. All SDM and mounting bracket fasteners must be carefully torqued and the arrow must be pointing toward the front of the vehicle to ensure proper operation of the air bag system.**
  The SDM could be activated when powered while not rigidly attached to the vehicle which could cause deployment and result in personal injury.

WARNING:

Driver and Passenger Seat Belt Pretensioners (If equipped)

- **For handling and storage of a live seat belt pretensioner, select a place where the ambient temperature below 65°C (150°F), without high humidity and away from electric noise.**
- **Never carry seat belt pretensioner by wire or connector of pretensioner. When placing a live seat belt pretensioner on the workbench or some place like that, never put something on seat belt pretensioner. Otherwise, personal injury may result.**
- **Never dispose of live (inactivated) seat belt pretensioners (drive and passenger). If disposal is necessary, be sure to activate them according to activation procedures described in Section 10B before disposal.**
- **The seat belt pretensioner immediately after activation is very hot. Wait for at least half an hour to cool it off before proceeding the work.**
- **With many service procedures, gloves and safety glasses should be worn to prevent any possible irritation of the skin or eyes.**

- **Even when the accident was light enough not to cause air bags to activate, be sure to inspect system parts and other related parts according to instructions under "Repairs and Inspections Required after an Accident" in Section 10B.**
- **When servicing parts other than air bag system, if shocks may be applied to air bag system component parts, remove those parts beforehand.**
- **When handling the air bag (inflator) modules (driver, passenger and side), seat belt pretensioners (driver and passenger), side sensors or SDM, be careful not to drop it or apply an impact to it. If an excessive impact was applied, never attempt disassembly or repair but replace it with a new one.**
- **When grease, cleaning agent, oil, water, etc. has got onto air bag (inflator) modules (driver, passenger and side) or seat belt pretensioners (drive and passenger), wipe off immediately with a dry cloth.**
- **Air bag wire harness is included in floor and instrument panel wire harnesses. Air bag wire harness branched off from floor and instrument panel wire harnesses can be identified easily as it is covered with a yellow protection tube and it has yellow connectors. Be very careful when handling it.**
- **When an open in air bag wire harness, damaged wire harness, connector or terminal is found, replace wire harness, connectors and terminals as an assembly.**
- **Do not apply power to the air bag system unless all components are connected or a diagnostic chart requests it, as this will set a diagnostic trouble code.**
- **Never use air bag system component parts from another vehicle.**
- **When using electric welding, be sure to disconnect all air bag (inflator) module connectors and pretensioner connectors from air bag wire harness respectively.**
- **Never expose air bag system component parts directly to hot air (drying or baking the vehicle after painting) or flames.**

- **WARNING / CAUTION labels are attached on each part of air bag system components. Be sure to follow the instructions.**
- **After vehicle is completely repaired, perform "Air Bag Diagnostic System Check" in Section 10B.**

General Precautions

The WARNING and CAUTION below describe some general precautions that you should observe when servicing a vehicle. These general precautions apply to many of the service procedures described in this manual, and they will not necessarily be repeated with each procedure to which they apply.

WARNING:

- **Whenever raising a vehicle for service, be sure to follow the instructions under "Vehicle Lifting Points" in this section.**
- **When it is necessary to do service work with the engine running, make sure that the parking brake is set fully and the transmission is in Neutral (for manual transmission vehicles) or Park (for automatic transmission vehicles), Keep hands, hair, clothing, tools, etc. away from the fan and belts when the engine is running.**
- **When it is necessary to run the engine indoors, make sure that the exhaust gas is forced outdoors.**
- **Do not perform service work in areas where combustible materials can come in contact with a hot exhaust system. When working with toxic or flammable materials (such as gasoline and refrigerant), make sure that the area you work in is well-ventilated.**
- **To avoid getting burned, keep away from hot metal parts such as the radiator, exhaust manifold, tail pipe, muffler, etc.**
- **New and used engine oil can be hazardous. Children and pets may be harmed by swallowing new or used oil. Keep new and used oil and used engine oil filters away from children and pets.**
  Continuous contact with used engine oil has been found to cause [skin] cancer in laboratory animals. Brief contact with used oil may irritate skin. To minimize your exposure to used engine oil, wear a long-sleeve shirt and moisture-proof gloves (such as dish washing gloves) when changing engine oil. If engine oil contacts your skin, wash thoroughly with soap and water. Launder any clothing or rags if wet with oil, recycle or properly dispose of used oil and filters.
- **Make sure the bonnet is fully closed and latched before driving. If it is not, it can fly up unexpectedly during driving, obstructing your view and resulting in an accident.**

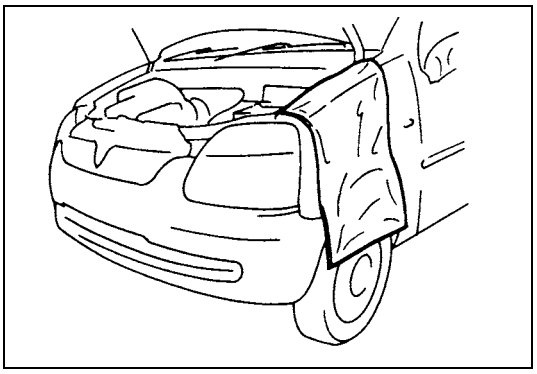

- **Before starting any service work, cover fenders, seats and any other parts that are likely to get scratched or stained during servicing. Also, be aware that what you wear (e.g, buttons) may cause damage to the vehicle's finish.**

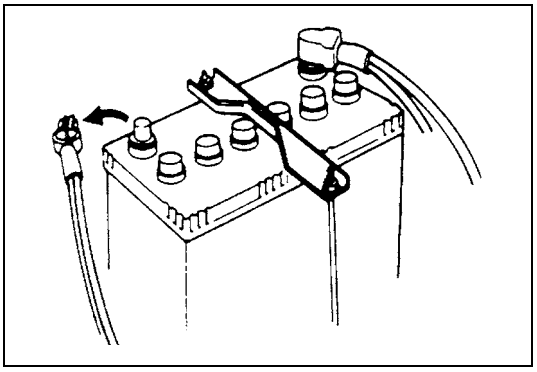

- **When performing service to electrical parts that does not require use of battery power, disconnect the negative cable of the battery.**

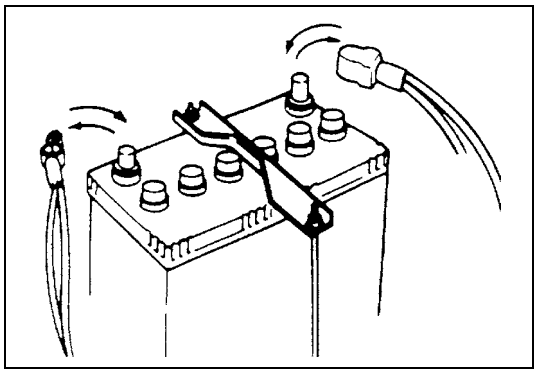

- **When removing the battery, be sure to disconnect the negative cable first and then the positive cable. When reconnecting the battery, connect the positive cable first and then the negative cable, and replace the terminal cover.**

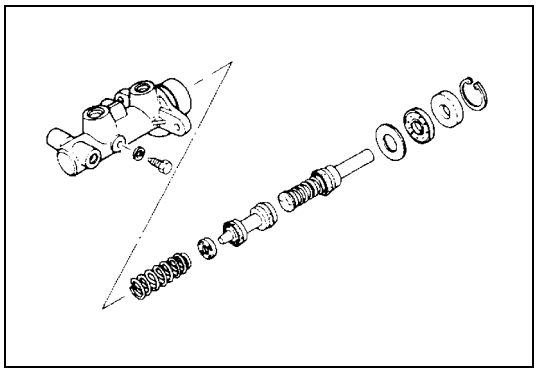

- **When removing parts that are to be reused, be sure to keep them arranged in an orderly manner so that they may be reinstalled in the proper order and position.**

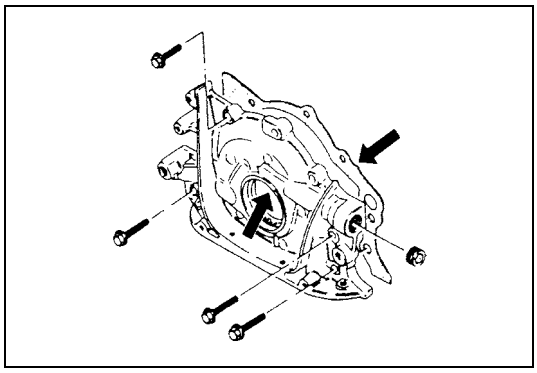

- **Whenever you use oil seals, gaskets, packing, O-rings, locking washers, split pins, self-locking nuts, and certain other parts as specified, be sure to use new ones. Also, before installing new gaskets, packing, etc., be sure to remove any residual material from the mating surfaces.**

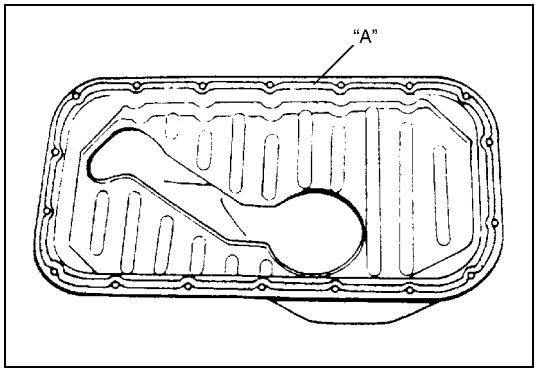

- **Make sure that all parts used in reassembly are perfectly clean.**
  When use of a certain type of lubricant, bond or sealant is specified, be sure to use the specified type.

"A": Sealant 99000-31250

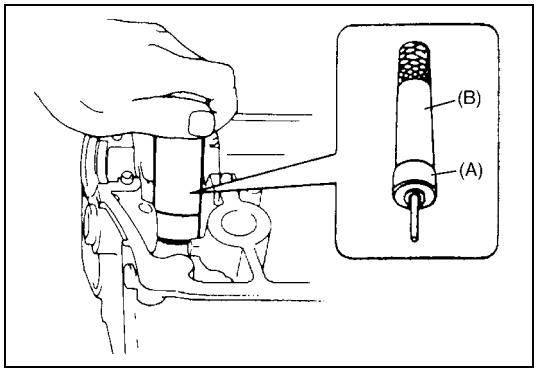

- **Be sure to use special tools when instructed.**

Special tool
(A) : 09917-98221
(B) : 09916-58210

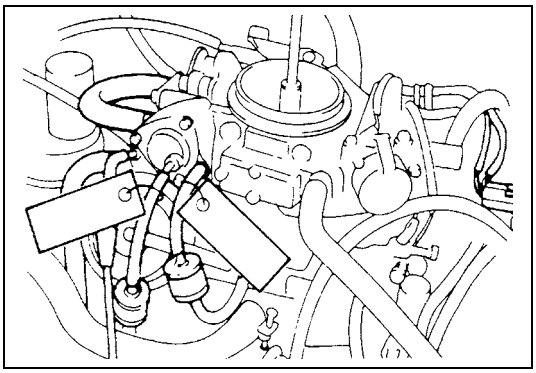

- **When disconnecting vacuum hoses, attach a tag describing the correct installation positions so that the hoses can be reinstalled correctly.**

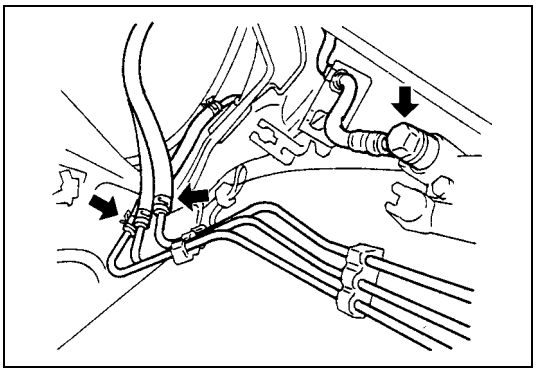

- **After servicing fuel, oil, coolant, vacuum, exhaust or brake systems, check all lines related to the system for leaks.**
- **For vehicles equipped with fuel injection systems, never disconnect the fuel line between the fuel pump and injector without first releasing the fuel pressure, or fuel can be sprayed out under pressure.**

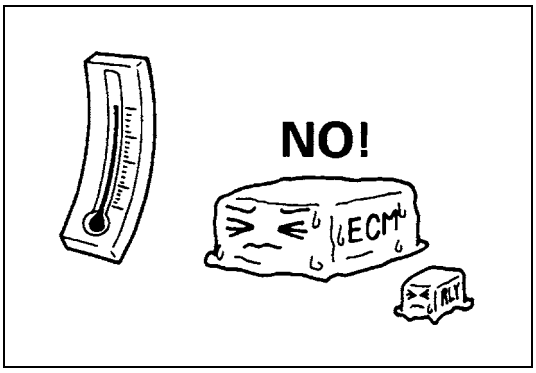

- **When performing a work that produces a heat exceeding 80°C (176°F) in the vicinity of the electrical parts, remove the heat sensitive electrical part(s) beforehand.**

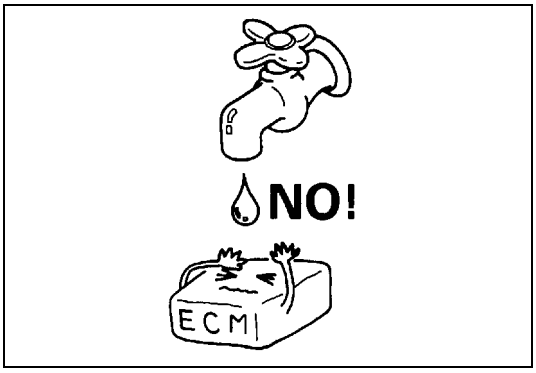

- **Use care not to expose connectors and electrical parts to water which will be a cause of a trouble.**

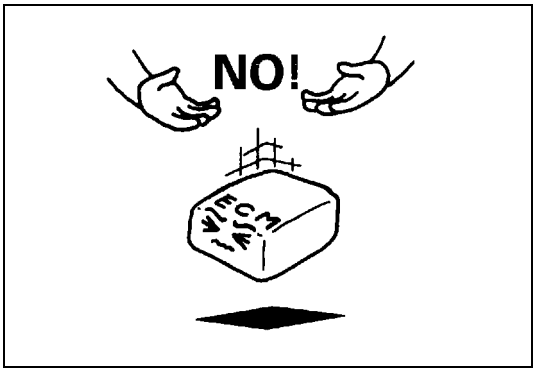

- **Always be careful not to handle electrical parts (computer, relay, etc.) in a rough manner or drop them.**

Precaution for Wheel (with Tire) Removal

Each wheel of this vehicle is installed using wheel bolts. When removing any of these wheels, never remove all wheel bolts at the same time. Leave at least 1 bolt for each wheel as it is to prevent wheel from dropping. When removing this remaining 1 bolt, hold wheel and tire so as not to allow them to come off.

Precautions for Catalytic Converter

For vehicles equipped with a catalytic converter, use only unleaded gasoline and be careful not to let a large amount of unburned gasoline enter the converter or it can be damaged.

- **Conduct a spark jump test only when necessary, make it as short as possible, and do not open the throttle.**
- **Conduct engine compression checks within the shortest possible time.**
- **Avoid situations which can result in engine misfire (e.g. starting the engine when the fuel tank is nearly empty.)**

Precaution for Installing Mobile Communication Equipment

When installing mobile communication equipment such as CB (Citizens-Band) -radio or cellular-telephone, be sure to observe the following precautions.
Failure to follow cautions may adversely affect electronic control system.

- **Keep the antenna as far away as possible from the vehicle's electronic control unit.**
- **Keep the antenna feeder more than 20 cm (7.9 in) away from electronic control unit and its wire harnesses.**
- **Do not run the antenna feeder parallel with other wire harnesses.**
- **Confirm that the antenna and feeder are correctly adjusted.**

Precaution in Servicing Full-Time 4WD Vehicle

This full-time 4WD vehicle can not be converted to 2WD manually.
Observe the following caution in servicing. Otherwise, front wheels drive rear wheels or vise-versa and vehicle accidents, drivetrain damage and personal injury may result.

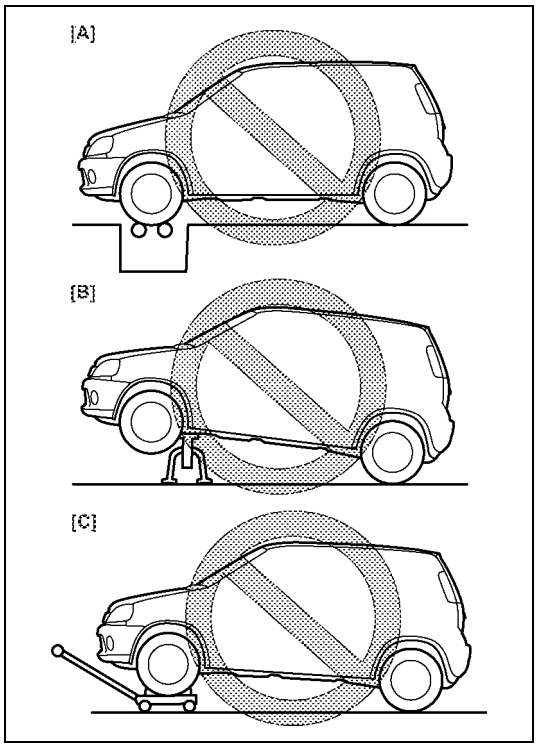

- **Never perform any of the following types of service work.**
  [A]: Testing with 2-wheel chassis dynamometer, speedometer tester or brake tester.
  [B]: Driving front wheels, which are jacked up.
  [C]: Towing under the condition where either front or rear wheels can not rotate.
- **When testing with 2-wheel chassis dynamometer, speedometer tester or brake tester, be sure to make the vehicle as front wheel drive by removing propeller shaft.**

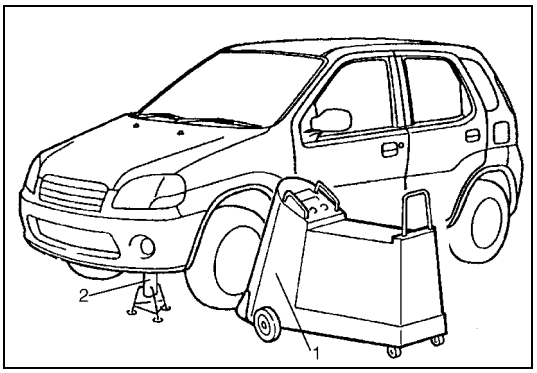

- **When using On-vehicle type wheel balancing equipment (1), be sure to jack up all four wheels, off the ground completely and support vehicle with safety stands (2). Be careful of the other wheels, which will rotate at the same time.**

- **This vehicle should be towed under one of the following conditions :**
  - **With all wheels on a flatbed truck.**
  - **With front or rear wheels lifted and a dolly under the other wheels.**

Precautions for Electrical Circuit Service

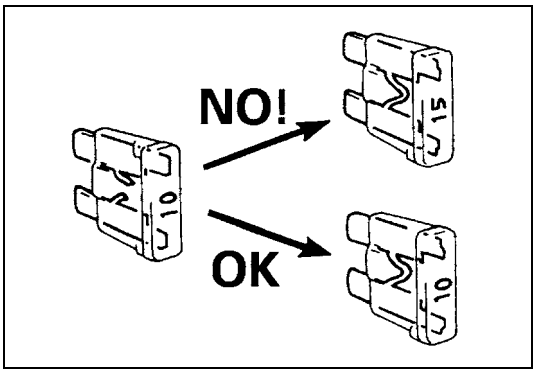

- **When replacing a fuse, make sure to use a fuse of the specified capacity. Use of a fuse with a larger capacity will cause a damage to the electrical parts and a fire.**

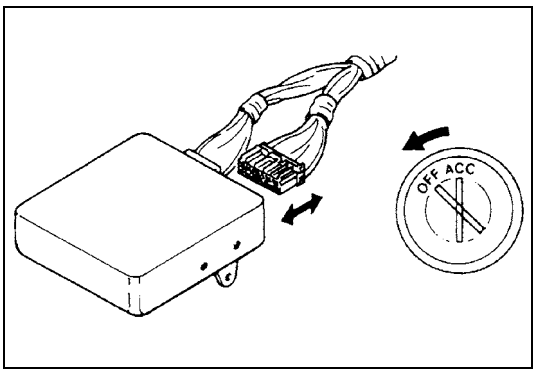

- **When disconnecting and connecting coupler, make sure to turn ignition switch OFF, or electronic parts may get damaged.**

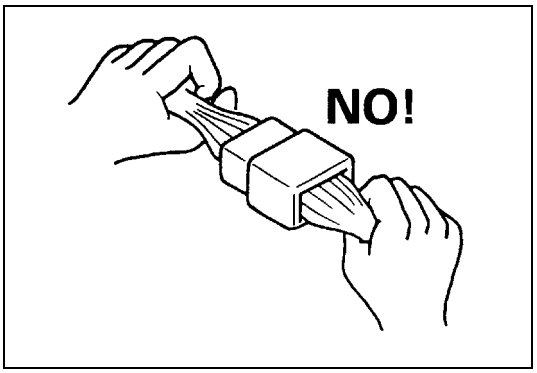

- **When disconnecting connectors, never pull the wiring harness. Unlock the connector lock first and then pull them apart by holding connectors themselves.**

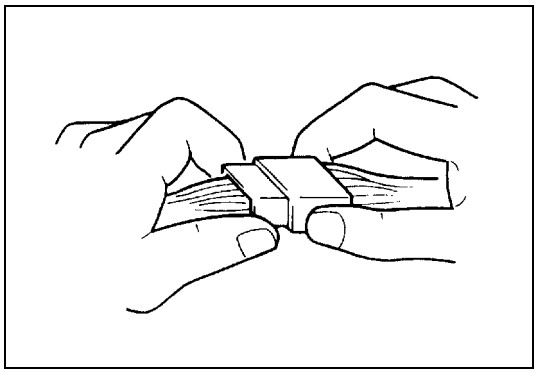

- **When connecting connectors, also hold connectors and put them together until they lock securely (a click is heard).**

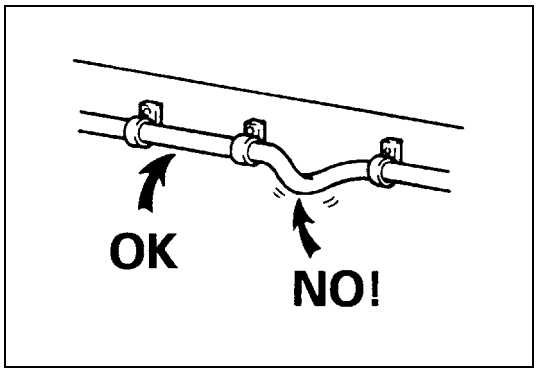

- **When installing the wiring harness, fix it with clamps so that no slack is left.**

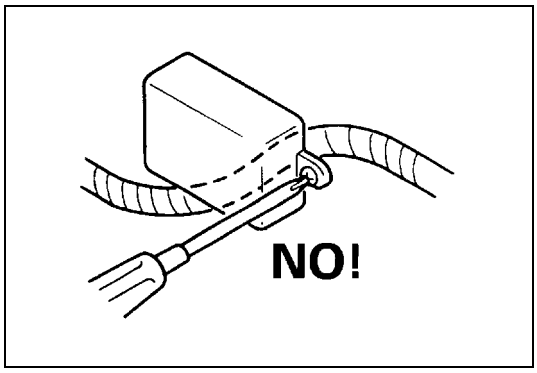

- **When installing vehicle parts, be careful so that the wiring harness is not interfered with or caught by any other part.**

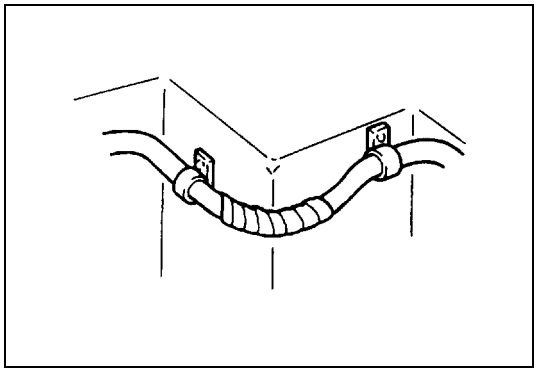

- **To avoid damage to the harness, protect its part which may contact against a part forming a sharp angle by winding tape or the like around it.**

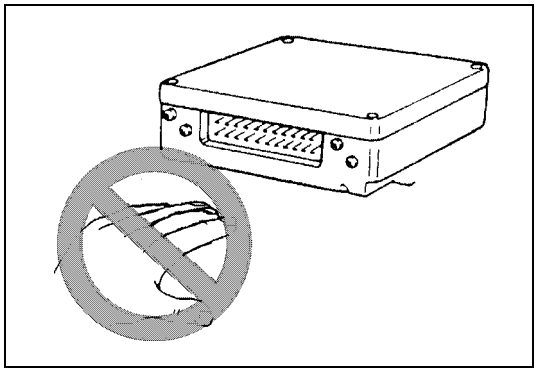

- **Be careful not to touch the electrical terminals of parts which use microcomputers (e.g. electronic control unit like as ECM, PCM, P/S controller, etc.). The static electricity from your body can damage these parts.**
- **Never connect any tester (voltmeter, ohmmeter, or whatever) to electronic control unit when its coupler is disconnected. Attempt to do it may cause damage to it.**

- **Never connect an ohmmeter to electronic control unit with its coupler connected to it. Attempt to do it may cause damage to electronic control unit and sensors.**
- **Be sure to use a specified voltmeter/ohmmeter. Otherwise, accurate measurements may not be obtained or personal injury may result. If not specified, use a voltmeter with high impedance (MΩ / V minimum) or a digital type voltmeter.**

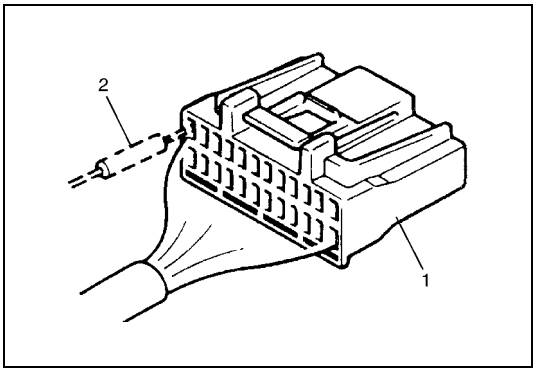

- **When taking measurements at electrical connectors using a tester probe, be sure to insert the probe (2) from the wire harness side (backside) of the connector (1).**

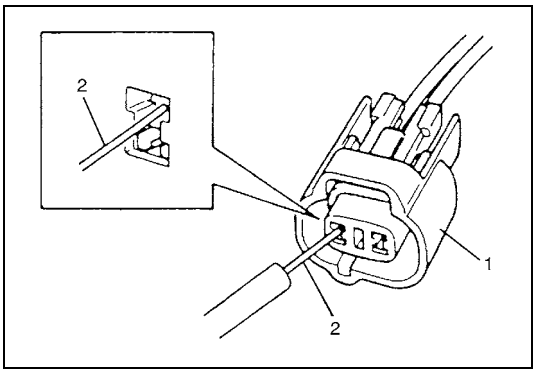

- **When connecting meter probe (2) from terminal side of coupler (1) because it can't be connected from harness side, use extra care not to bend male terminal of coupler of force its female terminal open for connection.**
  In case of such coupler as shown connect probe as shown to avoid opening female terminal.
  Never connect probe where male terminal is supposed to fit.
- **When checking connection of terminals, check its male half for bend and female half for excessive opening and both for locking (looseness), corrosion, dust, etc.**

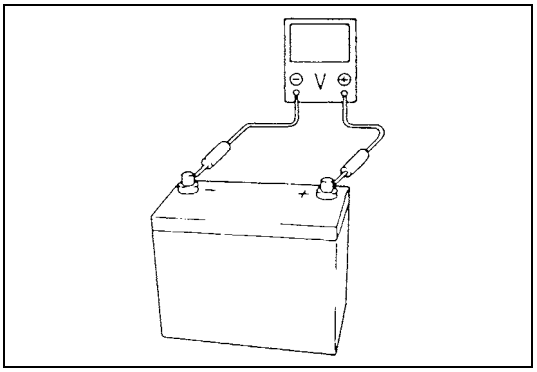

- **Before measuring voltage at each terminal, check to make sure that battery voltage is 11 V or higher. Such terminal voltage check at low battery voltage will lead to erroneous diagnosis.**

Electrical Circuit Inspection Procedure

While there are various electrical circuit inspection methods, described here is a general method to check its open and short circuit by using an ohmmeter and a voltmeter.

Open circuit check

Possible causes for the open circuit are as follows. As the cause is in the connector or terminal in many cases, they need to be checked particularly carefully.

- Loose connection of connector
- Poor contact of terminal (due to dirt, corrosion or rust on it, poor contact tension, entry of foreign object etc.)
- Wire harness being open

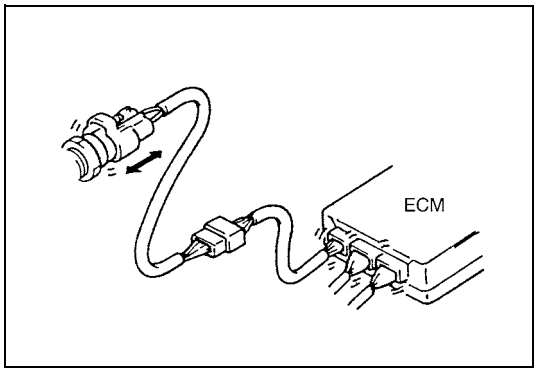

When checking system circuits including an electronic control unit such as ECM, TCM, ABS control module, etc., it is important to perform careful check, starting with items which are easier to check.

1) Disconnect negative (–) cable from battery
2) Check each connector at both ends of the circuit being checked for loose connection. Also check lock condition of connector if equipped with connector lock.

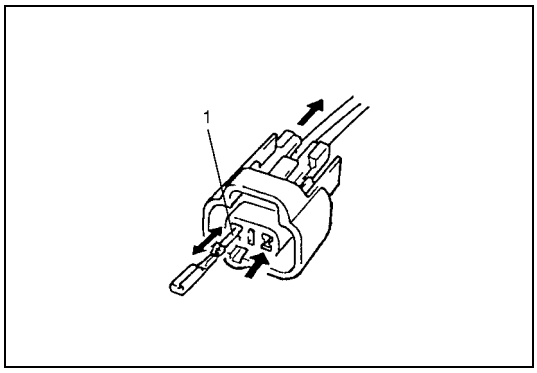

3) Using a test male terminal, check both terminals of the circuit being checked for contact tension of its female terminal.
   Check each terminal visually for poor contact (possibly caused by dirt, corrosion, rust entry of foreign object, etc.).
   At the same time, check to make sure that each terminal is locked in the connector fully.

1. Check contact tension by inserting and removing just for once.

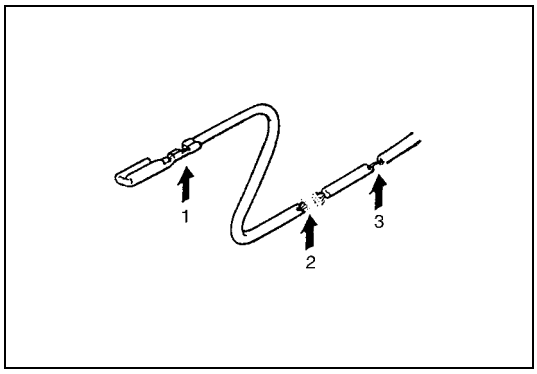

4) Using continuity check or voltage check the following procedure, check the wire harness for open circuit and poor connection with its terminals. Locate abnormality, if any.

1. Looseness of crimping
2. Open
3. Thin wire (single strand of wire)

Continuity check

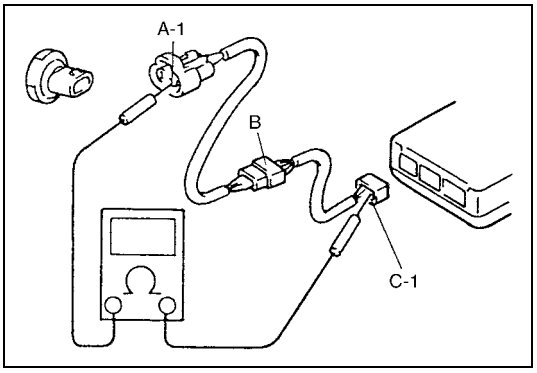

1) Measure resistance between connector terminals at both ends of the circuit being checked (between A-1 and C-1 in the figure). If no continuity is indicated (infinity or over limit), that means that the circuit is open between terminals A-1 and C-1.

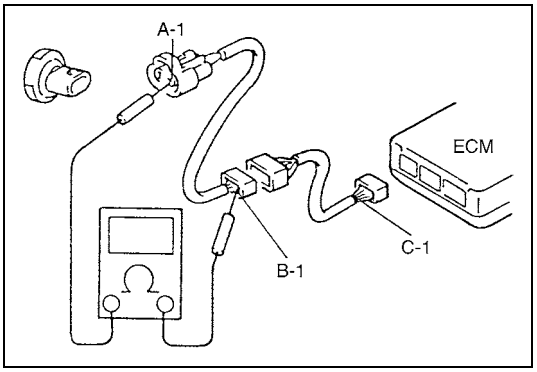

2) Disconnect the connector included in the circuit (connector-B in the figure) and measure resistance between terminals A-1 and B-1.
   If no continuity is indicated, that means that the circuit is open between terminals A-1 and B-1. If continuity is indicated, there is an open circuit between terminals B-1 and C-1 or an abnormality in connector-B.

Voltage check

If voltage is supplied to the circuit being checked, voltage check can be used as circuit check.

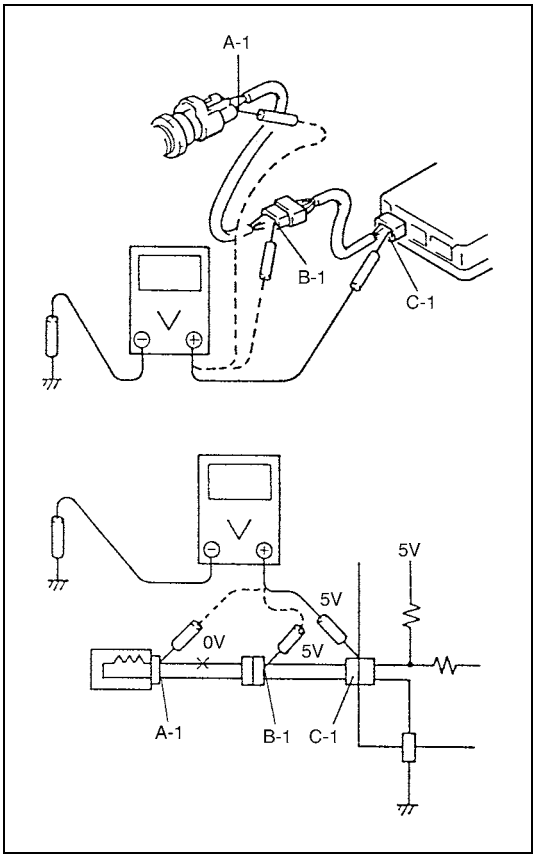

1) With all connectors connected and voltage applied to the circuit being checked, measure voltage between each terminal and body ground.
   a) If measurements were taken as shown in the figure and results were as listed below, it means that the circuit is open between terminals B-1 and A-1.

Voltage between
C-1 and body ground : Approx. 5 V
B-1 and body ground : Approx. 5 V
A-1 and body ground : 0 V

   b) Also, if measured values were as listed below, it means that there is a resistance (abnormality) of such level that corresponds to the voltage drop in the circuit between terminals A-1 and B-1.

Voltage between
C-1 and body ground : Approx. 5 V
B-1 and body ground : Approx. 5 V
A-1 and body ground : Approx. 3 V

Short circuit check (wire harness to ground)

1) Disconnect negative (–) cable at battery.
2) Disconnect connectors at both ends of the circuit to be checked.

NOTE:

If the circuit to be checked is connected to other parts (1), disconnect all connectors of those parts. Otherwise, diagnosis will be misled.

3) Measure resistance between terminal at one end of circuit (A-1 terminal in the figure) and body ground. If continuity is indicated, it means that there is a short to ground between terminals A-1 and C-1 of the circuit.

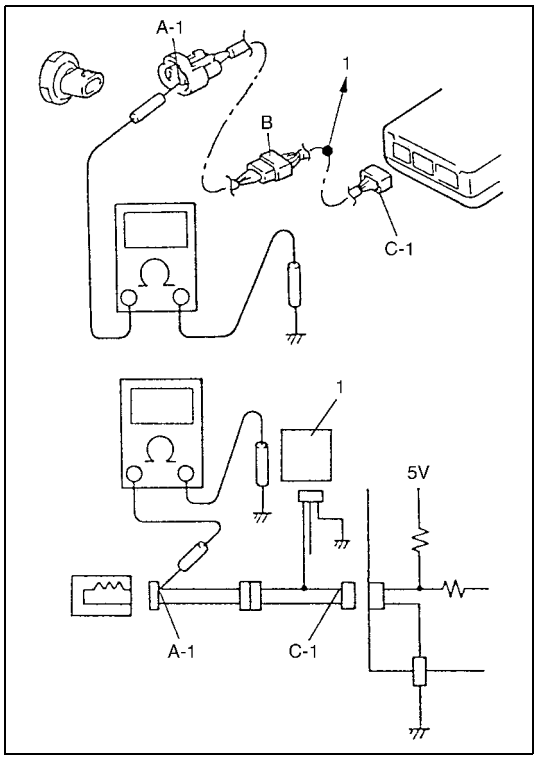

4) Disconnect the connector included in circuit (connector B) and measure resistance between A-1 and body ground.
If continuity is indicated, it means that the circuit is shorted to the ground between terminals A-1 and B-1.

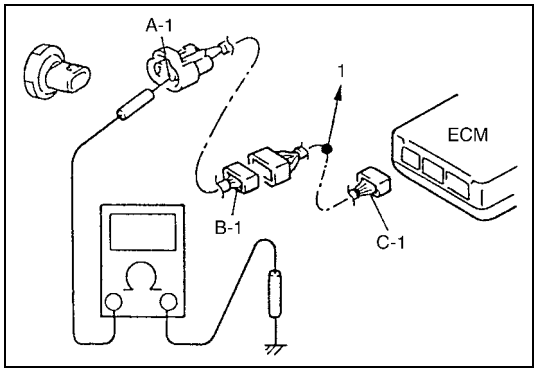

1. To other parts

Intermittent and Poor Connection

Most intermittent are caused by faulty electrical connections or wiring, although a sticking relay or solenoid can occasionally be at fault. When checking it for proper connection, perform careful check of suspect circuits for :

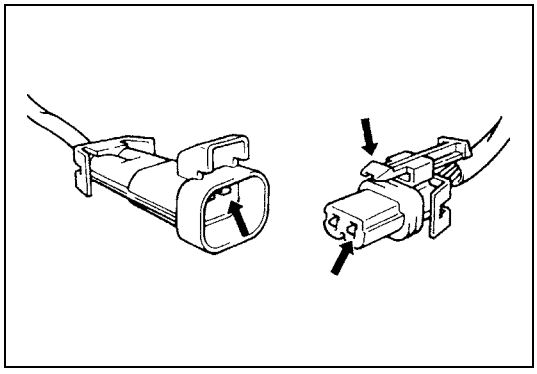

- Poor mating of connector halves, or terminals not fully seated in the connector body (backed out).
- Dirt or corrosion on the terminals. The terminals must be clean and free of any foreign material which could impede proper terminal contact. However, cleaning the terminal with a sand paper or the like is prohibited.
- Damaged connector body, exposing the terminals to moisture and dirt, as well as not maintaining proper terminal orientation with the component or mating connector.

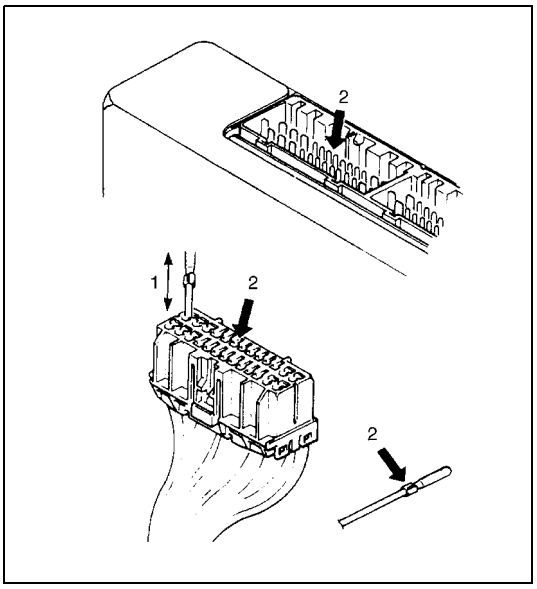

- Improperly formed or damaged terminals.
  Check each connector terminal in problem circuits carefully to ensure good contact tension by using the corresponding mating terminal.
  If contact tension is not enough, reform it to increase contact tension or replace.

1. Check contact tension by inserting and removing just once.
2. Check each terminal for bend and proper alignment.

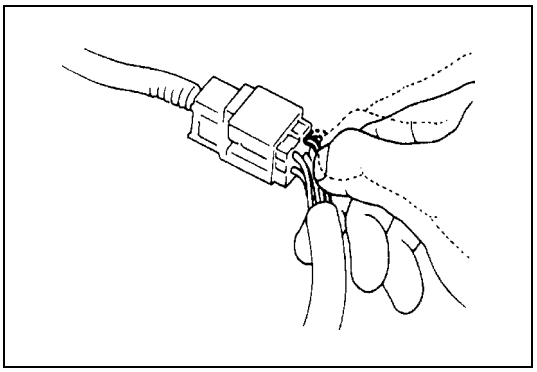

- Poor terminal-to-wire connection.
  Check each wire harness in problem circuits for poor connection by shaking it by hand lightly. If any abnormal condition is found, repair or replace.

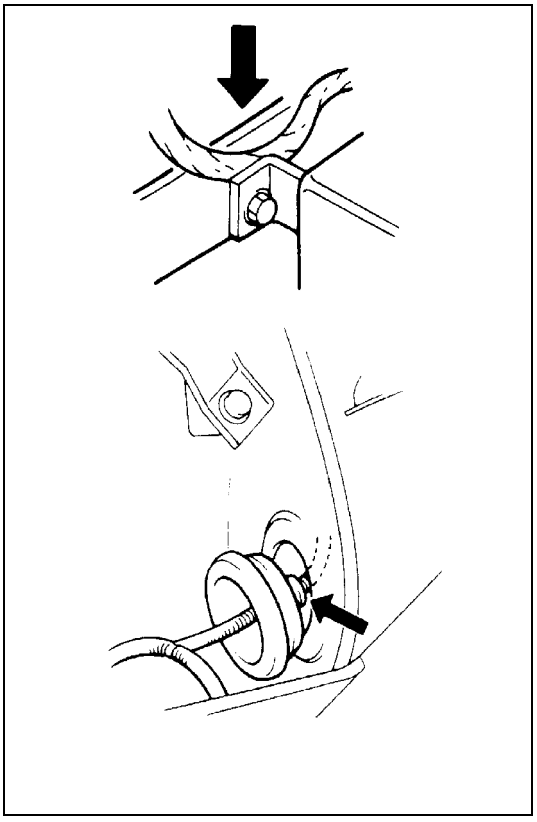

- Wire insulation which is rubbed through, causing an intermittent short as the bare area touches other wiring or parts of the vehicle.
- Wiring broken inside the insulation. This condition could cause continuity check to show a good circuit, but if only 1 or 2 strands of a multi-strand-type wire are intact, resistance could be far too high.
  If any abnormality is found, repair or replace.

Identification Information

Vehicle Identification Number

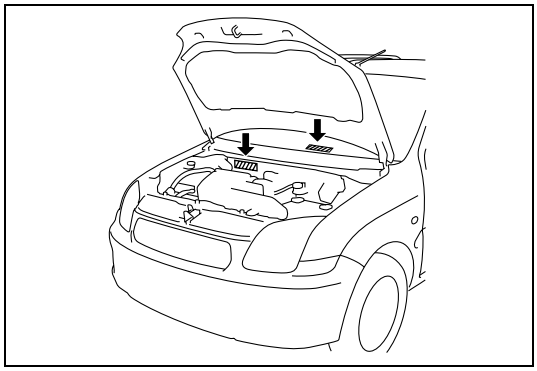

The number is punched on front dash panel in engine room and it is also on the left side of instrument panel depending on the vehicle specification.

Engine Identification Number

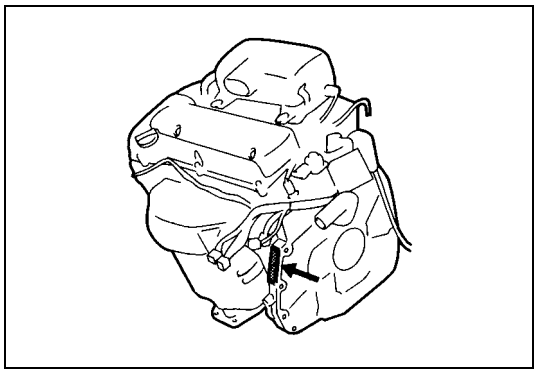

The number is punched on cylinder block.

Warning, Caution and Information Labels

The figure below shows main labels among others that are attached to vehicle component parts.
When servicing and handling parts, refer to WARNING/CAUTION instructions printed on labels.
If any WARNING/CAUTION label is found stained or damaged, clean or replace it as necessary.

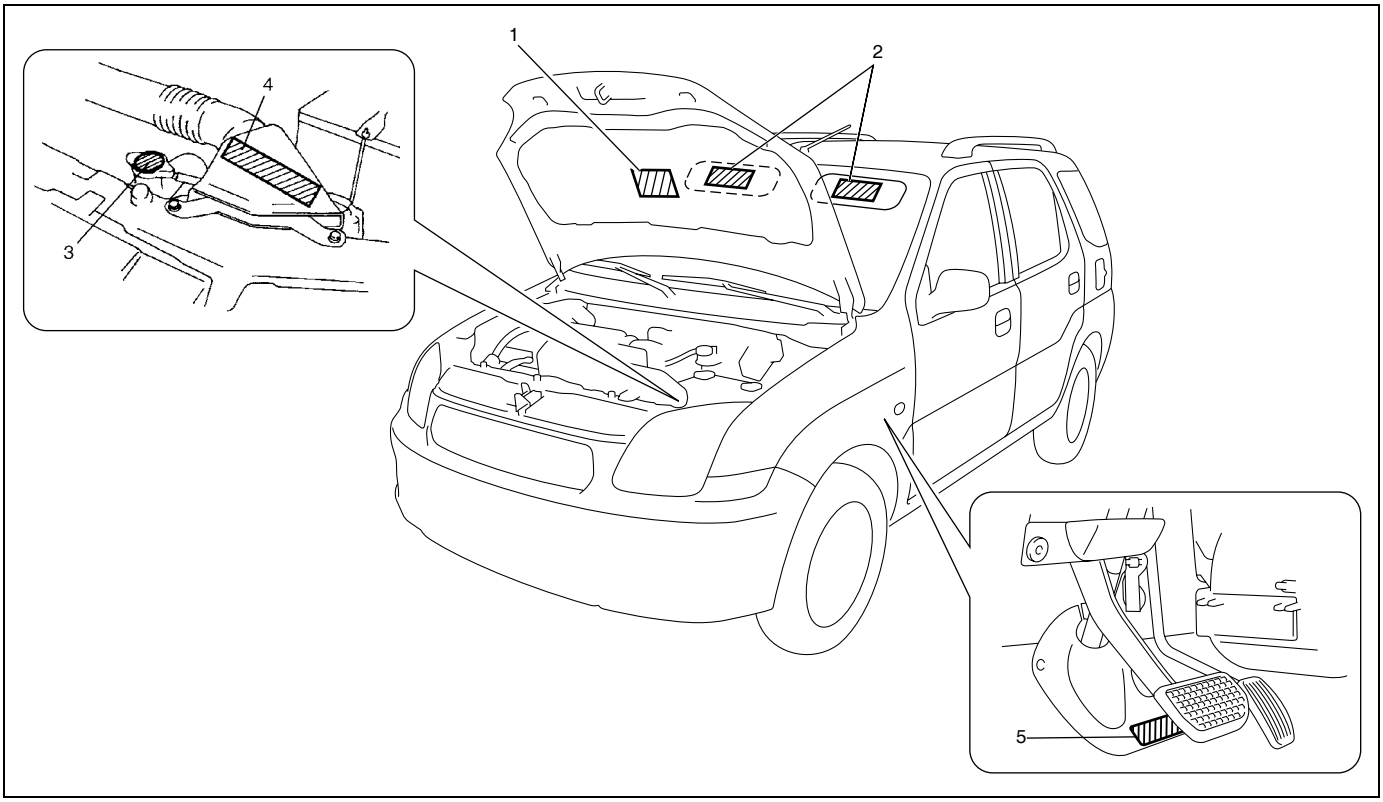

1. Air bag label on back side of engine hood (if equipped)	4. Engine cooling fan label
2. Air bag label on sun visor (if equipped)	5. Steering shaft joint cover label (if equipped)
3. Radiator cap label	

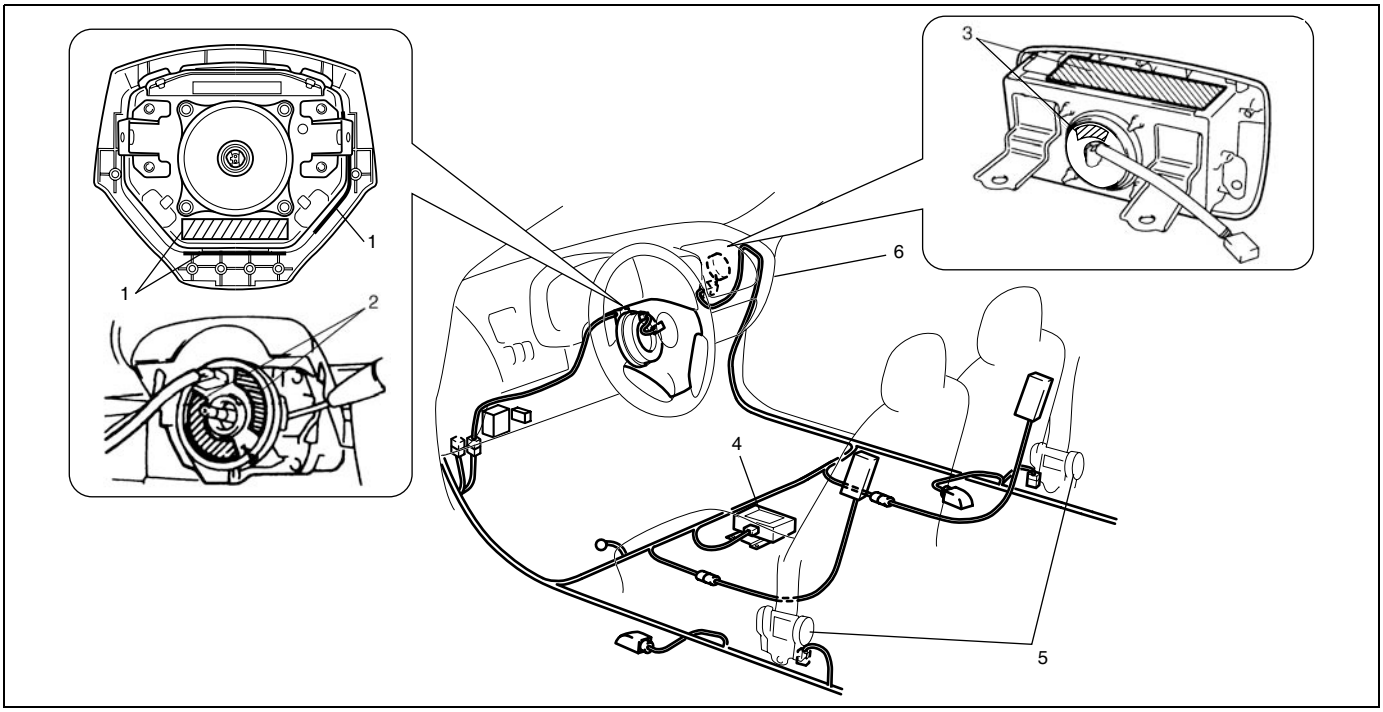

1. Air bag label on driver air bag (inflator) module	5. Pretensioner label on seat belt retractor
2. Air bag label on combination switch and contact coil assembly	6. Child seat label
3. Air bag label on passenger air bag (inflator) module	[A]: These labels are attached on vehicle equipped with air bag system only.
4. Air bag label on SDM	

Vehicle Lifting Points

WARNING:

- **Before applying hoist to underbody, always take vehicle balance throughout service into consideration. Vehicle balance on hoist may change depending on what part to be removed.**
- **Before lifting up the vehicle, check to be sure that end of hoist arm is not in contact with brake pipe, fuel pipe, bracket or any other part.**
- **When using frame contact hoist, apply hoist as shown (right and left at the same position). Lift up the vehicle till 4 tires are a little off the ground and make sure that the vehicle will not fall off by trying to move vehicle body in both ways. Work can be started only after this confirmation.**
- **Make absolutely sure to lock hoist after vehicle is hoisted up.**

When using frame contact hoist

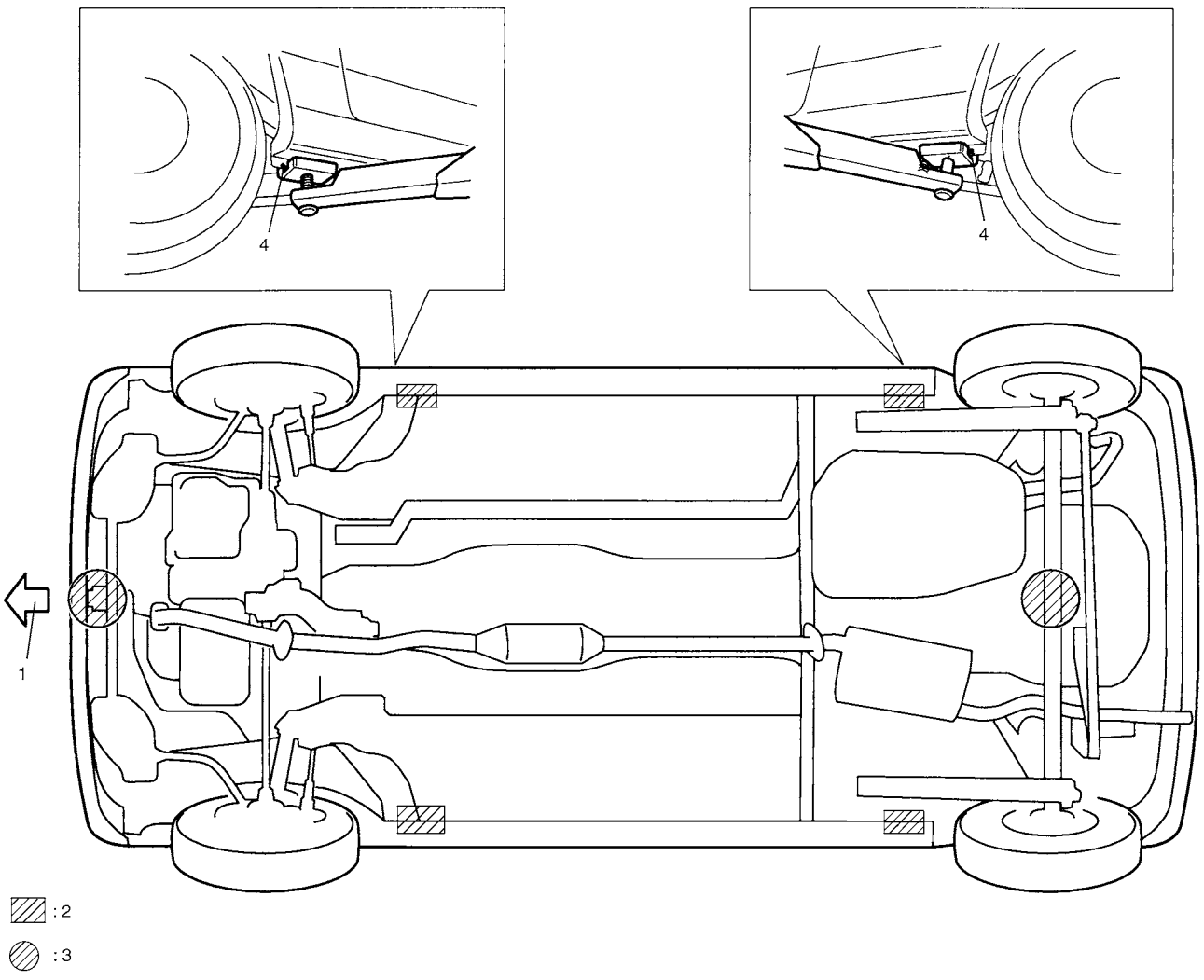

1.	Vehicle front
2.	Support position for frame contact hoist and safety stand
3.	Floor jack position
4.	Embossed-mark

When using floor jack

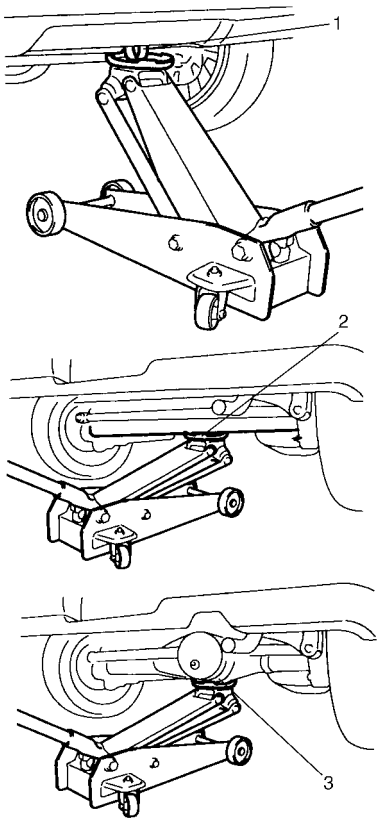

WARNING:

If the vehicle to be jacked up only at the front or rear end, be sure to block the wheels on ground in order to ensure safety.

After the vehicle is jacked up, be sure to support it on stands. It is extremely dangerous to do any work on the vehicle raised on jack alone.

CAUTION:

Never apply jack against suspension parts (i.e., stabilizer, etc.) or vehicle floor, or it may get deformed.

In raising front or rear vehicle end off the floor by jacking, be sure to put the jack against the front jacking bracket (1), the center portion of rear axle (2) (2WD vehicle) or rear axle housing (3) (4WD vehicle).

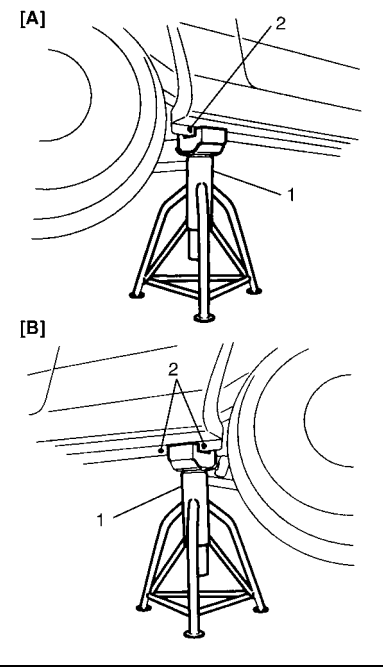

To perform service with either front or rear vehicle end jacked up, be sure to place safety stands (1) under vehicle body so that vehicle body is securely supported. And then check to ensure that vehicle body does not slide on safety stands (1) and the vehicle is held stable for safety's sake.

[A] :	Front
[B] :	Rear
2.	Embossed mark

Abbreviations and Symbols May be Used in This Manual

Abbreviations

A	ABS	Anti-lock Brake System
	ATDC	After Top Dead Center
	API	American Petroleum Institute
	ATF	Automatic Transmission Fluid
	ALR	Automatic Locking Retractor
	AC	Alternating Current
	A/T	Automatic Transmission
	A/C	Air Conditioning
	ABDC	After Bottom Dead Center
	A/F	Air Fuel Mixture Ratio
	A-ELR	Automatic-Emergency Locking Retractor
B	B+	Battery Positive Voltage
	BTDC	Before Top Dead Center
	BBDC	Before Bottom Dead Center
C	CKT	Circuit
	CKP sensor	Crankshaft Position Sensor
	CMP sensor	Camshaft Position Sensor
	CO	Carbon Monoxide
	CPP switch	Clutch Pedal Position Switch (Clutch Switch, Clutch Start Switch)
	CPU	Central Processing Unit
	CRS	Child Restraint System
D	DC	Direct Current
	DLC	Data Link Connector (Assembly Line Diag. Link, ALDL, Serial Data Link, SDL)
	DOHC	Double Over Head Camshaft
	DOJ	Double Offset Joint
	DRL	Daytime Running Light
	DTC	Diagnostic Trouble Code (Diagnostic Code)
E	EBCM	Electronic Brake Control Module, ABS Control Module
	EBD	Electronic Brake Force Distribution
	ECM	Engine Control Module
	ECT sensor	Engine Coolant Temperature Sensor (Water Temp. Sensor, WTS)
	EGR	Exhaust Gas Recirculation
	EGRT sensor	EGR Temperature Sensor (Recirculated Exhaust Gas Temp. Sensor, REGTS)
	EFE Heater	Early Fuel Evaporation Heater (Positive Temperature Coefficient, PTC Heater)
E	EPS	Electronic Power Steering
	EVAP	Evaporative Emission
	EVAP Canister	Evaporative Emission Canister (Charcoal Canister)
F	4WD	4 Wheel Drive
G	GEN	Generator
	GND	Ground
H	HC	Hydrocarbons
	HO2S	Heated Oxygen Sensor
I	IAC Valve	Idle Air Control Valve (Idle Speed Control Solenoid Valve ISC Solenoid Valve)
	IAT Sensor	Intake Air Temperature Sensor (Air temperature Sensor, ATS)
	ICM	Immobilizer Control Module
	IG	Ignition
	ISC Actuator	Idle Speed Control Actuator
L	LH	Left Hand
	LSPV	Load Sensing Proportioning Valve
M	MAF Sensor	Mass Air Flow Sensor (Air Flow Sensor, AFS, Air Flow Meter, AFM)
	MAP Sensor	Manifold Absolute Pressure Sensor (Pressure Sensor, PS)
	Max	Maximum
	MFI	Multiport Fuel Injection (Multipoint Fuel Injection)
	MIN	Minimum
	MIL	Malfunction Indicator Lamp (“SERVICE ENGINE SOON” Light)
	M/T	Manual Transmission
N	NOx	Nitrogen Oxides
O	OBD	On-Board Diagnostic System (Self-Diagnosis Function)
	O/D	Overdrive
	OHC	Over Head Camshaft
	O2S	Oxygen Sensor
P	PNP	Park/Neutral Position
	P/S	Power Steering

P	PSP Switch	Power Steering Pressure Switch (P/S Pressure Switch)
	PCM	Powertrain Control Module
	PCV	Positive Crankcase Ventilation
R	RH	Right Hand
S	SAE	Society of Automotive Engineers
	SDM	Sensing and Diagnostic Module (Air bag controller, Air bag control module)
	SFI	Sequential Multiport Fuel Injection
	SOHC	Single Over Head Camshaft
T	TBI	Throttle Body Fuel Injection (Single-Point Fuel Injection, SPI)
	TCC	Torque Converter Clutch
	TCM	Transmission Control Module (A/T Controller, A/T Control Module)
	TP Sensor	Throttle Position Sensor
	TVV	Thermal Vacuum Valve (Thermal Vacuum Switching Valve, TVSV, Bimetal Vacuum Switching Valve, BVSV)
	TWC	Three Way Catalytic Converter (Three Way Catalyst)
	2WD	2 Wheel Drive
V	VIN	Vehicle Identification Number
	VSS	Vehicle Speed Sensor
	VVT	Variable Valve Timing
W	WU-OC	Warm Up Oxidation Catalytic Converter
	WU-TWC	Warm Up Three Way Catalytic Converter

Symbols

SYMBOL	DEFINITION	SYMBOL	DEFINITION
	Tightening torque	1216B	Apply SEALANT 1216B 99000-31230
OIL	Apply oil (engine, transmission, transfer, differential)	Si	Apply SILICONE SEALANT 99000-31120
FLD	Apply fluid (brake, power steering or automatic transmission fluid)	366E	Apply SEALING COMPOUND 366E 99000-31090
A	Apply GREASE A 99000-25010		
C	Apply GREASE C 99000-25030	1322	Apply THREAD LOCK 1322 99000-32110
E	Apply GREASE E 99000-25050	1333B	Apply THREAD LOCK 1333B 99000-32020
H	Apply GREASE H 99000-25120	1342	Apply THREAD LOCK 1342 99000-32050
I	Apply GREASE I 99000-25210		
1215	Apply SEALANT 1215 99000-31110		Do not reuse
1207F	Apply SEALANT 1207F 99000-31250		Note on reassembly

Wire Color Symbols

Symbol		Wire Color	Symbol		Wire Color
B	BLK	Black	O, Or	ORN	Orange
Bl	BLU	Blue	R	RED	Red
Br	BRN	Brown	W	WHT	White
G	GRN	Green	Y	YEL	Yellow
Gr	GRY	Gray	P	PNK	Pink
Lbl	LT BLU	Light blue	V	PPL	Violet
Lg	LT GRN	Light green			

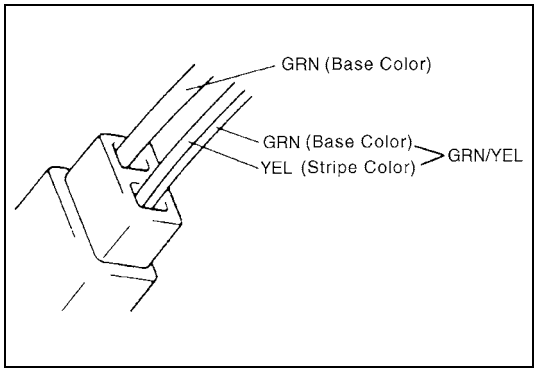

There are two kinds of colored wire used in this vehicle. One is single-colored wire and the other is dual-colored (striped) wire.
The single-colored wire uses only one color symbol (i.e. “GRN”).
The dual-colored wire uses two color symbols (i.e. “GRN/YEL”).
The first symbol represents the base color of the wire (“GRN” in the figure) and the second symbol represents the color of the stripe (“YEL” in the figure).

Fastener Information

Metric Information

Metric Fasteners

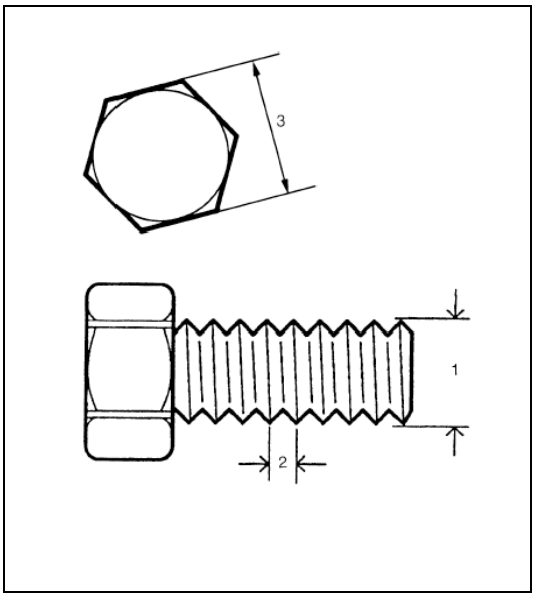

Most of the fasteners used for this vehicle are JIS-defined and ISO-defined metric fasteners. When replacing any fasteners, it is most important that replacement fasteners be the correct diameter, thread pitch and strength.

CAUTION:

Even when the nominal diameter (1) of thread is the same, the thread pitch (2) or the width across flats (3) may vary between ISO and JIS. Refer to JIS-TO-ISO Main Fasteners Comparison Table below for the difference.
Installing a mismatched bolt or nut will cause damage to the thread.
Before installing check the thread pitch for correct matching and then tighten it by hand temporarily. If it is tight, recheck the thread pitch.

JIS-TO-ISO Main Fasteners Comparison Table

Standard \ Nominal diameter		M6	M8	M10	M12	M14
JIS	Thread pitch	1.0	1.25	1.25	1.25	1.5
	Width accross flats	10	12	14	17	19
ISO	Thread pitch	1.0	1.25	1.5	1.5	1.5
	Width accross flats	10	13	16	18	21

Fastener Strength Identification

Most commonly used metric fastener strength property classes are 4T, 6.8, 7T, 8.8 and radial line with the class identification embossed on the head of each bolt. Some metric nuts will be marked with punch, 6 or 8 mark strength identification on the nut face. Figure shows the different strength markings.
When replacing metric fasteners, be careful to use bolts and nuts of the same strength or greater than the original fasteners (the same number marking or higher). It is likewise important to select replacement fasteners of the correct diameter and thread pitch. Correct replacement bolts and nuts are available through the parts division.

Metric bolts : Identification class numbers or marks correspond to bolt strength (increasing numbers represent increasing strength).

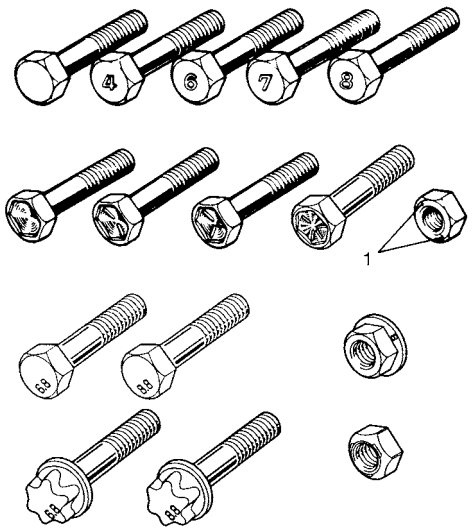

1. Nut strength identification

Standard Tightening Torque

Each fastener should be tightened to the torque specified in each section of this manual. If no description or specification is provided, refer to the following Tightening torque chart for the applicable torque for each fastener. When a fastener of greater strength than the original one is used, however, use the torque specified for the original fastener.

NOTE:

- **For the flanged bolt, flanged nut and self-lock nut of 4T and 7T strength, add 10% to the tightening torque given in the chart below.**
- **The chart below is applicable only where the fastened parts are made of steel light alloy.**

Tightening torque chart :

			Thread Diameter (Nominal Diameter) (mm)								
			4	5	6	8	10	12	14	16	18
Strength	A equivalent of 4T strength fastener 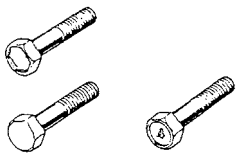	N·m	1.5	3.0	5.5	13	29	45	65	105	160
		kg-m	0.15	0.30	0.55	1.3	2.9	4.5	6.5	10.5	16
		lb-ft	1.0	2.5	4.0	9.5	21.0	32.5	47.0	76.0	116.0
	A equivalent of 6.8 strength fastener without flange 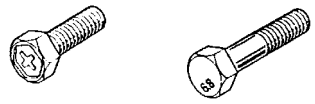	N·m	2.4	4.7	8.4	20	42	80	125	193	280
		kg-m	0.24	0.47	0.84	2.0	4.2	8.0	12.5	19.3	28
		lb-ft	2.0	3.5	6.0	14.5	30.5	58.0	90.5	139.5	202.5
	A equivalent of 6.8 strength fastener with flange 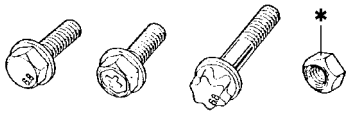	N·m	2.4	4.9	8.8	21	44	84	133	203	298
		kg-m	0.24	0.49	0.88	2.1	4.4	8.4	13.3	20.3	29.8
		lb-ft	2.0	3.5	6.5	15.5	32.0	61.0	96.5	147.0	215.5
	A equivalent of 7T strength fastener	N·m	2.3	4.5	10	23	50	85	135	210	240
		kg-m	0.23	0.45	1.0	2.3	5.0	8.5	13.5	21	24
		lb-ft	2.0	3.5	7.5	17.0	36.5	61.5	98.0	152.0	174.0
	A equivalent of 8.8 strength fastener without flange 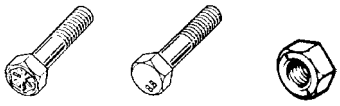	N·m	3.1	6.3	11	27	56	105	168	258	373
		kg-m	0.31	0.63	1.1	2.7	5.6	10.5	16.8	25.8	37.3
		lb-ft	2.5	4.5	8.0	19.5	40.5	76.0	121.5	187.0	270.0
	A equivalent of 8.8 strength fastener with flange 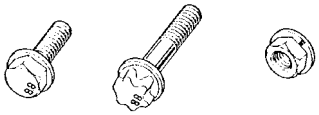	N·m	3.2	6.5	12	29	59	113	175	270	395
		kg-m	0.32	0.65	1.2	2.9	5.9	11.3	17.5	27	39.5
		lb-ft	2.5	5.0	9.0	21.0	43.0	82.0	126.5	195.5	286.0

*: Self-lock nut

SECTION 0B

MAINTENANCE AND LUBRICATION

WARNING:

For vehicles equipped with a Supplemental Restraint (Air Bag) System:

- **Service on and around the air bag system components or wiring must be performed only by an authorized SUZUKI dealer. Refer to "System Components and Wiring Location View" under "General Description" in Section 10B in order to confirm whether you are performing service on or near the air bag system components or wiring. Please observe all WARNINGS and "Service Precautions" under "On-Vehicle Service" in Section 10B before performing service on or around the air bag system components or wiring. Failure to follow WARNINGS could result in unintentional activation of the system or could render the system inoperative. Either of these two conditions may result in severe injury.**
- **Technical service work must be started at least 90 seconds after the ignition switch is turned to the "LOCK" position and the negative cable is disconnected from the battery. Otherwise, the system may be activated by reserve energy in the Sensing and Diagnostic Module (SDM).**

CONTENTS

Maintenance Schedule 0B-2
Maintenance Schedule Under Normal Driving Conditions 0B-2
Maintenance Recommended Under Severe Driving Conditions 0B-4
Maintenance Service 0B-5
Drive Belt Inspection 0B-5
Water pump and generator drive belt inspection 0B-5
A/C Compressor drive belt (if equipped) inspection 0B-5
Drive Belt Replacement 0B-5
Water pump and generator drive belt replacement 0B-5
A/C Compressor drive belt (if equipped) replacement 0B-5
Valve Lash (Clearance) Inspection 0B-6
Engine Oil and Oil Filter Replacement 0B-6
Engine Coolant Replacement 0B-8
Exhaust System Inspection 0B-8
Spark Plugs Replacement 0B-9
Air Cleaner Filter Inspection 0B-9
Air Cleaner Filter Replacement 0B-9
Fuel Lines and Connections Inspection 0B-9
Fuel Tank Inspection 0B-10
PCV Valve Inspection 0B-10
Fuel Evaporative Emission Control System Inspection 0B-10
Brake Discs and Pads (Front) Inspection 0B-10
Brake Drums and Shoes (Rear) Inspection 0B-11
Brake Hoses and Pipes Inspection 0B-11
Brake Fluid Replacement 0B-11
Brake Lever and Cable Inspection 0B-11
Clutch Inspection 0B-12
Tires Inspection 0B-12
Wheel Discs Inspection 0B-13
Wheel Bearing Inspection 0B-13
Suspension System Inspection 0B-13
Steering System Inspection 0B-13
Drive Shaft (Axle) Boots Inspection 0B-14
Propeller Shafts (4WD) Inspection 0B-14
Manual Transmission Oil Inspection 0B-15
Manual Transmission Oil Replacement 0B-15
Transfer Oil (4WD) and Rear Differential Oil (4WD) Inspection 0B-15
Transfer Oil (4WD) and Rear Differential Oil (4WD) Replacement 0B-16
All Latches, Hinges and Locks Inspection 0B-16
Doors 0B-16
Engine hood 0B-16
Air Conditioning Filter (If Equipped) Inspection 0B-16
Air Conditioning Filter (If Equipped) Replacement 0B-16
Final Inspection 0B-17
Recommended Fluids and Lubricants 0B-18

Maintenance Schedule

Maintenance Schedule Under Normal Driving Conditions

NOTE:

- **This interval should be judged by odometer reading or months, whichever comes first.**
- **This table includes service as scheduled up to 90,000 km (54,000 miles) mileage. Beyond 90,000 km (54,000 miles), carry out the same services at the same intervals respectively.**

Interval			Km (x 1,000)	15	30	45	60	75	90
			Miles (x 1,000)	9	18	27	36	45	54
			Months	12	24	36	48	60	72
ENGINE									
Drive belt				–	–	I	–	–	R
Valve lash (clearance)				–	I	–	I	–	I
Engine oil and oil filter				R	R	R	R	R	R
Engine coolant				–	–	R	–	–	R
Exhaust system				–	I	–	I	–	I
IGNITION SYSTEM									
✱Spark plugs	When unleaded fuel is used	Vehicle without HO2S	Iridium plug	–	–	–	R	–	–
		Vehicle with HO2S	Iridium plug	Replace every 105,000 km (63,000 miles) or 84 months					
	When leaded fuel is used, refer to “Maintenance Recommended Under Severe Driving Conditions” in this section.								
FUEL SYSTEM									
Air cleaner filter			Paved-road	I	I	R	I	I	R
			Dusty conditions	Refer to “Maintenance Recommended Under Severe Driving Conditions” in this section.					
Fuel lines and connections				–	I	–	I	–	I
Fuel tank				–	–	I	–	–	I
EMISSION CONTROL SYSTEM									
✱PCV valve		Vehicle without HO2S		–	–	I	–	–	I
		Vehicle with HO2S		–	–	–	–	–	I
✱Fuel evaporative emission control system				–	–	–	–	–	I

NOTE:

- **“R” : Replace or change**
- **“I” : Inspect and correct, replace or lubricate if necessary**
- **For Sweden, items with ✱ (asterisk) should be performed by odometer reading only.**
- **For spark plugs, replace every 50,000 km if the local law requires.**
- **Iridium spark plug: IFR6J11 (NGK)**

Interval	Km (x 1,000)	15	30	45	60	75	90
	Miles (x 1,000)	9	18	27	36	45	54
	Months	12	24	36	48	60	72
BRAKE							
Brake discs and pads (thickness, wear, damage)		I	I	I	I	I	I
Brake drums and shoes (wear, damage)		–	I	–	I	–	I
Brake hoses and pipes (leakage, damage, clamp)		–	I	–	I	–	I
Brake fluid		–	R	–	R	–	R
Brake lever and cable (damage, stroke, operation)		Inspect at first 15,000 km (9,000 miles only)					
CHASSIS AND BODY							
Clutch (pedal height and travel)		–	I	–	I	–	I
Tires (wear, damage, rotation) / wheels (damage)		I	I	I	I	I	I
Suspension system (tightness, damage, rattle, breakage)		–	I	–	I	–	I
Steering system (tightness, damage, breakage, rattle)		–	I	–	I	–	I
Drive shaft (axle) boots / Propeller shafts (4WD)		–	–	I	–	–	I
Manual transmission oil (leakage, level) (I : 1st 15,000 km only)		I	–	R	–	–	R
Transfer oil (4WD) (leakage, level)		I	–	I	–	I	–
Rear differential oil (4WD) (leakage, level) (R : 1st 15,000 km only)		R or I	–	I	–	I	–
All latches, hinges and locks		–	I	–	I	–	I
Air conditioning filter (if equipped)		–	I	R	–	I	R

NOTE:

- **"R" : Replace or change**
- **"I" : Inspect and correct or replace if necessary**

Maintenance Recommended Under Severe Driving Conditions

If the vehicle is usually used under the conditions corresponding to any severe condition code given below, IT IS RECOMMENDED that applicable maintenance operation be performed at the particular interval as shown in the following table.

Severe condition code:

A: Repeated short trips
B: Driving on rough and/or muddy roads
C: Driving on dusty roads
D: Driving in extremely cold weather and/or salted roads
E: Repeated short trips in extremely cold weather
F: Leaded fuel use
G: – – – – –
H: Towing a trailer (if admitted)

Severe Condition Code	Maintenance		Maintenance Operation	Maintenance Interval
– B C D – – – –	Drive belt		I	Every 15,000 km (9,000 miles) or 12 months
			R	Every 45,000 km (27,000 miles) or 36 months
A – C D E F – H	Engine oil and oil filter		R	Every 5,000 km (3,000 miles) or 4 months
– – C – – – – –	Air cleaner filter ✱1		I	Every 2,500 km (1,500 miles)
			R	Every 30,000 km (18,000 miles) or 24 months
A B C – E F – H	Spark plugs	Iridium spark plug	R	Every 30,000 km (18,000 miles) or 24 months
– B C D – – – H	Wheel bearings		I	Every 15,000 km (9,000 miles) or 12 months
– B – D E – – H	Drive shafts and propeller shafts (4WD)		I	Every 15,000 km (9,000 miles) or 12 months
– B – – E – – H	Manual transmission, transfer (4WD) and differential oil (4WD)		R	First time only: 15,000 km (9,000 miles) or 12 months
				Second time and after: Every 30,000 km (18,000 miles) or 24 months reckoning from 0 km (0 miles) or 0 month

NOTE:

- **"I": Inspect and correct or replace if necessary**
- **"R": Replace or change**
- **✱1: Inspect more frequently if the vehicle is used under dusty conditions.**

Maintenance Service

Drive Belt Inspection

WARNING:
All inspection and replacement are to be performed with ENGINE NOT RUNNING.

Water pump and generator drive belt inspection

1) Disconnect negative (–) cable at battery.

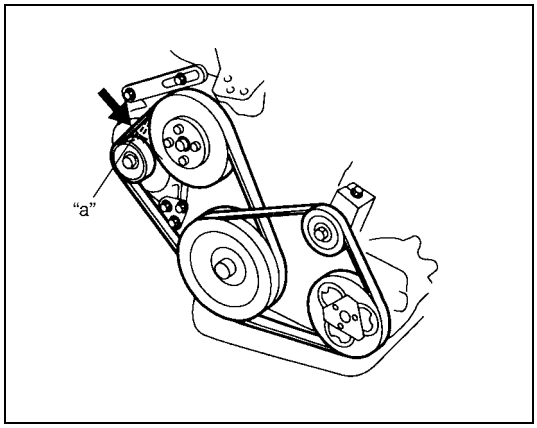

2) Inspect belt for cracks, cuts, deformation, wear and cleanliness. If any defect exists, replace.
   Check belt for tension.

   Water pump and generator belt tension
   "a": 4.5 – 5.5 mm (0.18 – 0.22 in.) deflection under 100 N (10 kg, 22 lb) pressure

   NOTE:
   When replacing belt with a new one, adjust belt tension to 3 – 4 mm (0.12 – 0.16 in.)

3) If belt is too tight or too loose, adjust it to specification by adjusting alternator position.
4) Tighten alternator adjusting bolts and pivot bolt.
5) Connect negative (–) cable to battery.

A/C Compressor drive belt (if equipped) inspection

1) Disconnect negative (–) cable at battery.

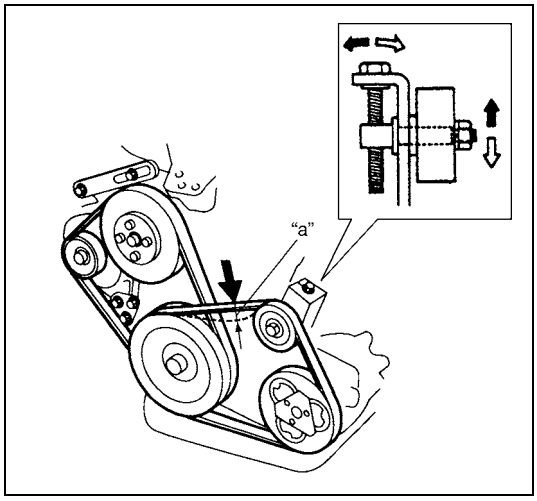

2) Inspect belt for cracks, cuts, deformation, wear and cleanliness. If any defect exists, replace.
   Check belt for tension.
   If belt tension is out of specification, adjust it referring to "Compressor drive belt tension" in Section 1B.

   A/C compressor drive belt tension
   "a": 3 – 5 mm (0.12 – 0.20 in.) deflection under 100 N (10 kg, 22 lb) pressure

3) Connect negative (–) cable to battery.

Drive Belt Replacement

Water pump and generator drive belt replacement

Replace belt with new one referring to "Water Pump/Generator Drive Belt Removal and Installation" in Section 6B.

A/C Compressor drive belt (if equipped) replacement

Replace belt with new one referring to "Compressor Drive Belt Replacement" in Section 1B.

Valve Lash (Clearance) Inspection

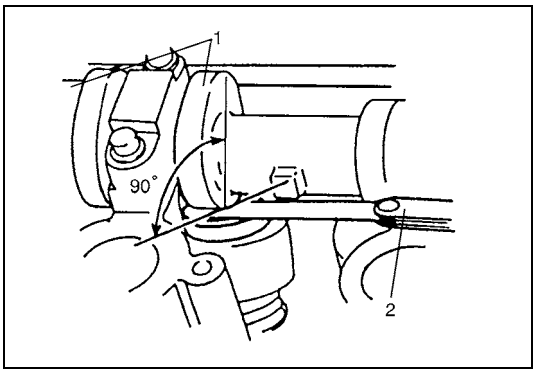

1) Inspect intake and exhaust valve lash and adjust as necessary.
   Refer to "Valve Lash (Clearance) Inspection" in Section 6A1 for valve lash inspection and adjustment procedure.

1. Camshaft
2. Thickness gauge

Engine Oil and Oil Filter Replacement

WARNING:
- **New and used engine oil can be hazardous. Be sure to read "WARNING" in General Precautions in Section 0A and observe what in written there.**
- **Step 1) – 7) outlined below must be performed with ENGINE NOT RUNNING. For step 8), be sure to have adequate ventilation while engine is running.**

Before draining engine oil, check engine for oil leakage. If any evidence of leakage is found, make sure to correct defective part before proceeding to the following work.

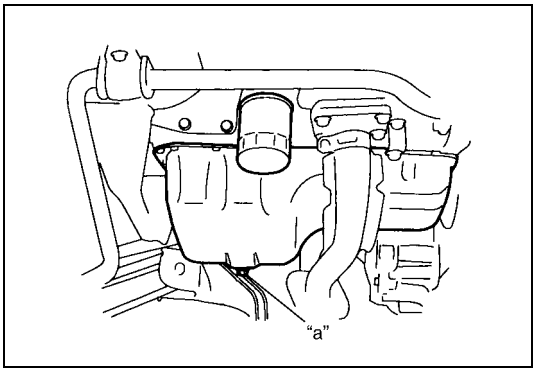

1) Drain engine oil by removing drain plug.
2) After draining oil, wipe drain plug clean. Reinstall drain plug, and tighten it securely as specified below.

Tightening torque
Engine oil drain plug (a) : 50 N·m (5.0 kg-m, 36.5 lb-ft)

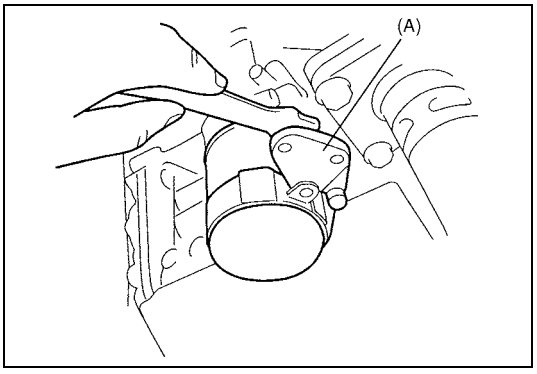

3) Loosen oil filter by using oil filter wrench (special tool).

Special tool
(A) : 09915-47330

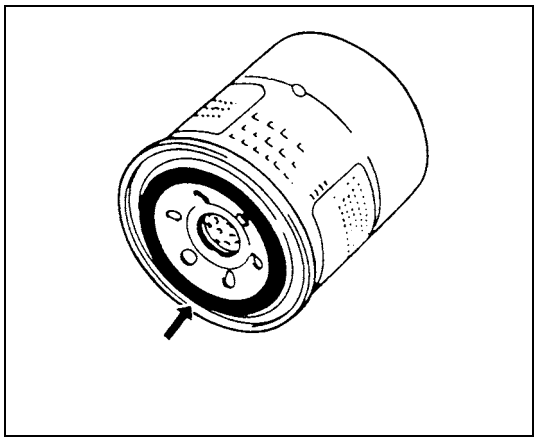

NOTE:

Before fitting new oil filter, be sure to oil its O-ring. Use engine oil for this purpose.

4) Screw new filter on oil filter stand by hand until the filter O-ring contacts the mounting surface.

CAUTION:

To tighten oil filter properly, it is important to accurately identify the position at which filter O-ring first contacts the mounting surface.

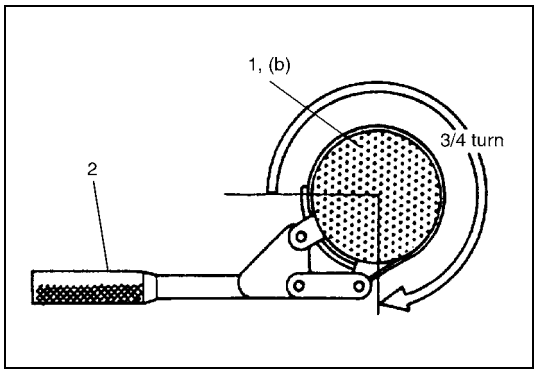

5) Tighten the filter (1) 3/4 turn from the point of contact with the mounting surface using an oil filter wrench (2).

Tightening torque
Oil filter (b) : 14 N·m (1.4 kg-m, 10.5 lb-ft) (for reference)

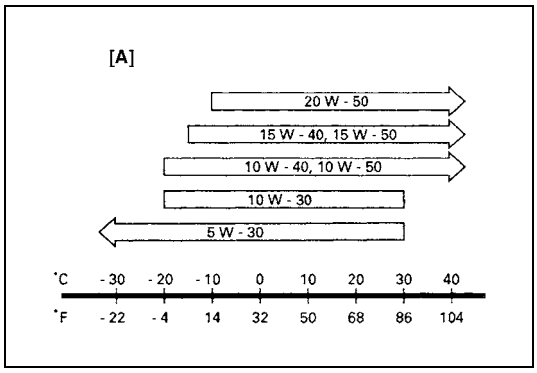

6) Replenish oil until oil level is brought to FULL level mark on dipstick. (oil pan and oil filter capacity). The filler inlet is at the top of the cylinder head cover.
It is recommended to use engine oil of SG, SH, SJ or SL grade. Select the appropriate oil viscosity according to the proper engine oil viscosity chart [A].

Engine oil specification

Oil pan capacity	About 3.6 liters (7.6/6.3 US/Imp pt.)
Oil filter capacity	About 0.2 liter (0.4/0.3 US/Imp pt.)
Others	About 0.3 liter (0.6/0.5 US/Imp pt.)
Total	About 4.1 liters (8.7/7.2 US/Imp pt.)

NOTE:

Engine oil capacity is specified. However, note that the amount of oil required when actually changing oil may somewhat differ from the data in the table depending on various conditions (temperature, viscosity, etc.)

7) Check oil filter and drain plug for oil leakage.

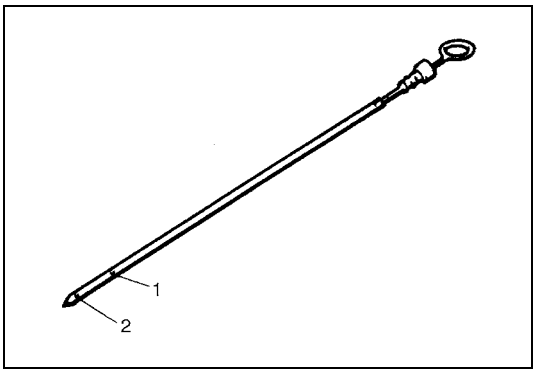

8) Start engine and run it for 3 minutes. Stop it and wait 5 minutes before checking oil level. Add oil, as necessary, to bring oil level to FULL level mark on dipstick.

1. Full level mark (hole)
2. Low level mark (hole)

Engine Coolant Replacement

WARNING:

To help avoid danger of being burned, do not remove radiator cap while engine and radiator are still hot. Scalding fluid and steam can be blown out under pressure if cap is taken off too soon.

CAUTION:

When changing engine coolant, use mixture of 50% specified water and 50% ANTIFREEZE / ANTICORROSION COOLANT for the purpose of corrosion protection and lubrication.

Change engine coolant with new one referring to “Cooling System Flush and Refill” in Section 6B.

Exhaust System Inspection

WARNING:

To avoid danger of being burned, do not touch exhaust system when it is still hot. Any service on exhaust system should be performed when it is cool.

When carrying out periodic maintenance, or the vehicle is raised for other service, check exhaust system as follows:

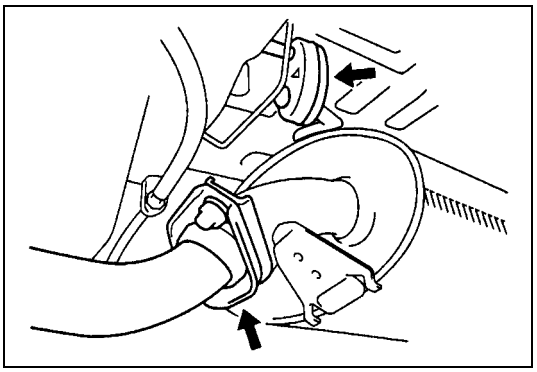

- Check rubber mountings for damage, deterioration, and out of position.
- Check exhaust system for leakage, loose connections, dents and damages.
  If bolts or nuts are loose, tighten them to specification.
- Check nearby body areas for damaged, missing, or mispositioned parts, open seams, holes, loose connections or other defects which could permit exhaust fumes to seep into the vehicle.
- Make sure that exhaust system components have enough clearance from the underbody to avoid overheating and possible damage to the floor carpet.
- Any defects should be fixed at once.

Spark Plugs Replacement

Replace spark plugs with new ones referring to “Spark Plugs Removal and Installation” in Section 6F1.

Air Cleaner Filter Inspection

1) Remove air cleaner case clamps.
2) Take air cleaner filter out of case.

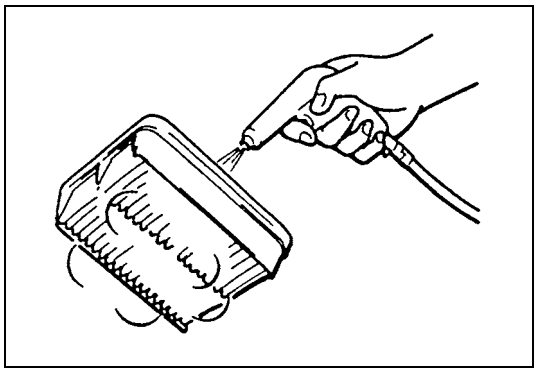

3) Check that filter is not excessively dirty, damaged or oily, clean filter with compressed air from air outlet side of filter.
4) Install air cleaner filter and clamp upper case securely.

Air Cleaner Filter Replacement

Replace air cleaner filter with new one according to steps 1), 2) and 4) of inspection procedure.

Fuel Lines and Connections Inspection

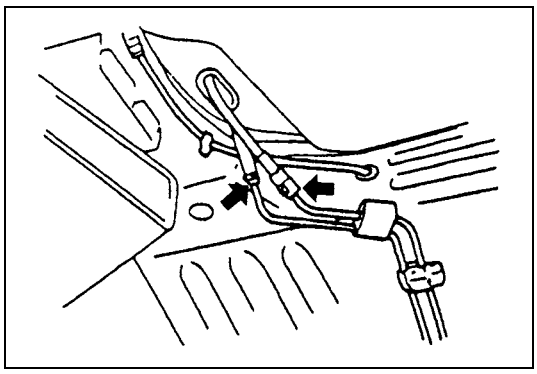

Visually inspect fuel lines and connections for evidence of fuel leakage, hose cracking and damage. Make sure all clamps are secure.
Repair leaky joints, if any.
Replace hoses that are suspected of being cracked.

Fuel Tank Inspection

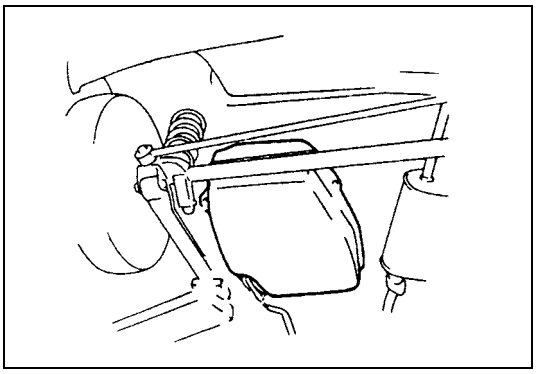

Check fuel tank damage, cracks, fuel leakage, corrosion and tank bolts looseness.
If a problem is found, repair or replace.

PCV Valve Inspection

Check crankcase ventilation hose and PCV hose for leaks, cracks or clog, and PCV valve for stick or clog. Refer to “PCV VALVE” under “PCV system inspection” of Section 6E1 for PCV valve checking procedure.

Fuel Evaporative Emission Control System Inspection

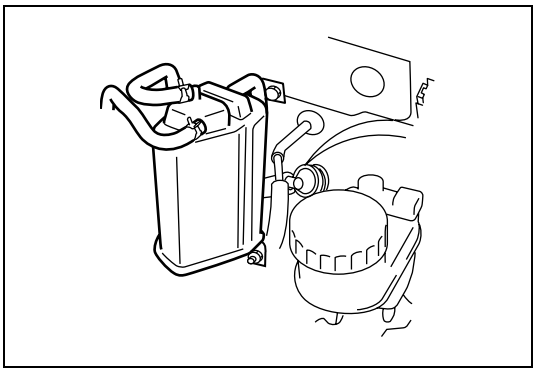

1) Visually inspect hoses for cracks, damage, or excessive bends. Inspect all clamps for damage and proper position.
2) Check EVAP canister for operation and clog, referring to “EVAP CANISTER” under “Evaporative emission control system inspection” in Section 6E1.

If a malfunction is found, repair or replace.

Brake Discs and Pads (Front) Inspection

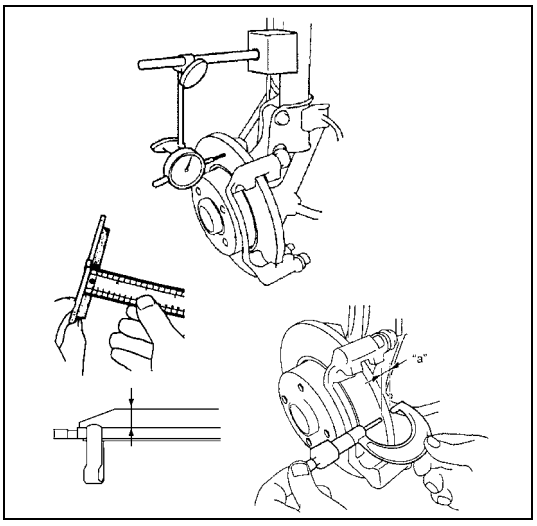

1) Remove wheel and caliper but don’t disconnect brake hose from caliper.
2) Check front disc brake pads and discs for excessive wear, damage and deflection. Replace parts as necessary. For details, refer to “Front Disc Brake Pad Inspection” and “Front Brake Disc Inspection” in Section 5B.
   Be sure to torque caliper pin bolts to specification.

Brake Drums and Shoes (Rear) Inspection

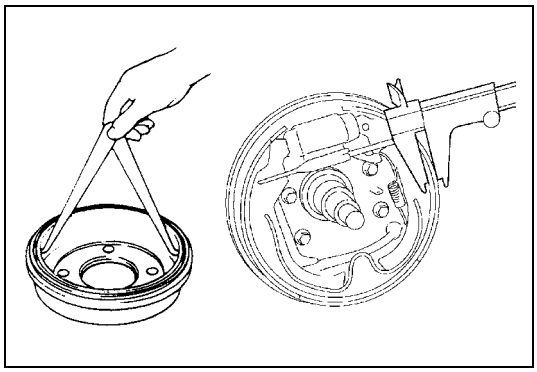

1) Remove wheel and brake drum.
2) Check rear brake drums and brake linings for excessive wear and damage, while wheels and drums are removed. At the same time, check wheel cylinders for leaks. Replace these parts as necessary.
   For details, refer to “Drum Brake Component Parts Inspection” in Section 5C.

Brake Hoses and Pipes Inspection

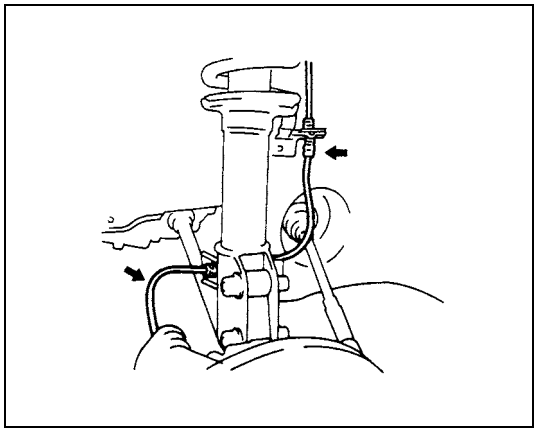

Perform this inspection where there is enough light and use a mirror as necessary.

- Check brake hoses and pipes for proper hookup, leaks, cracks, chafing and other damage.
- Check that hoses and pipes are clear of sharp edges and moving parts.

Repair or replace any of these parts as necessary.

CAUTION:
After replacing any brake pipe or hose, be sure to carry out air purge operation.

Brake Fluid Replacement

Change brake fluid as follows.
Drain existing fluid from brake system completely, fill system with specified fluid and carry out air purge operation.
For air purging procedure, refer to “Air Bleeding of Brake System” in Section 5.

Brake Lever and Cable Inspection

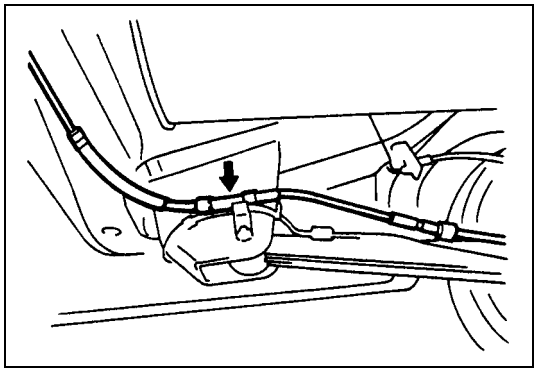

1) Inspect brake cable for damage and smooth movement. Replace cable if it is in deteriorated condition.

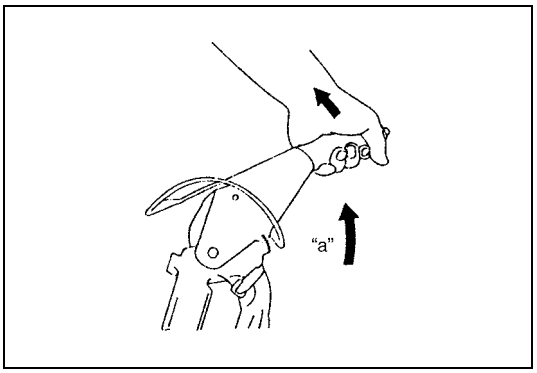

2) Check tooth tip of each notch for damage or wear. If any damage or wear is found, replace parking lever.
3) Check parking brake lever for proper operation and stroke, and adjust it if necessary.
   For checking and adjusting procedures, refer to "Parking Brake Inspection and Adjustment" in Section 5.

Parking brake lever stroke
"a":4 – 9 notches (with 20 kg (44 lbs) of pull pressure)

Clutch Inspection

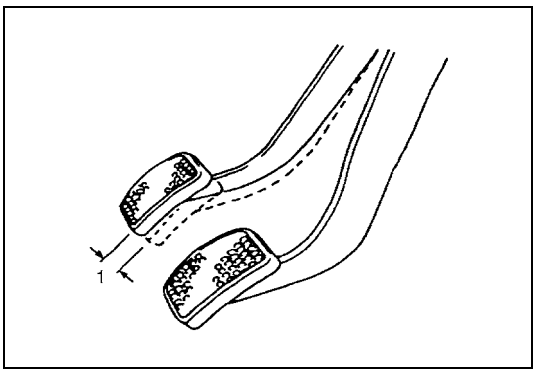

Check clutch pedal for height and free travel (1) referring to "Clutch pedal height" and "Clutch pedal free travel" in Section 7C. Adjust or correct if necessary.

Tires Inspection

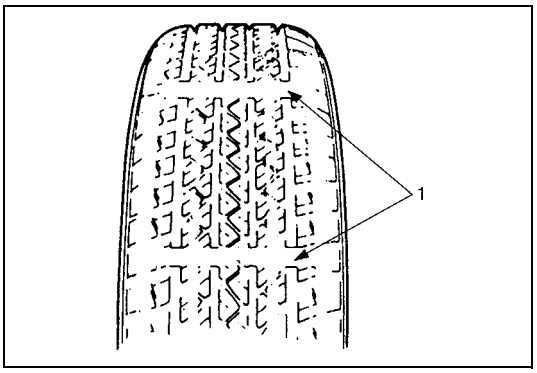

1) Check tires for uneven or excessive wear, or damage.
   If defective, replace.
   Refer to "Tire Diagnosis" in Section 3 for details.

1. Wear indicator

2) Check inflating pressure of each tire and adjust pressure to specification as necessary.

NOTE:

- **Tire inflation pressure should be checked when tires are cool.**
- **Specified tire inflation pressure should be found on tire placard or in owner's manual which came with the vehicle.**

3) Rotate tires.
   For details, refer to "Tire Rotation" in Section 3F.

Wheel Discs Inspection

Inspect each wheel disc for dents, distortion and cracks. A disc in badly damaged condition must be replaced.

Wheel Bearing Inspection

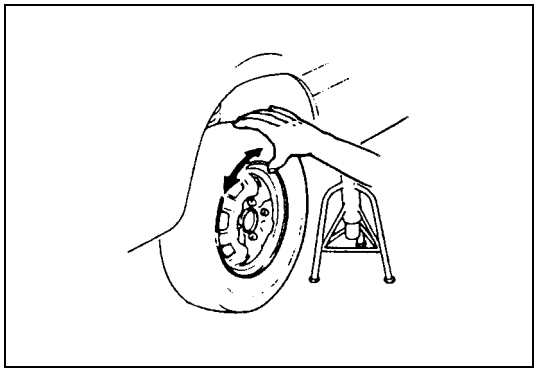

1) Check front wheel bearing for wear, damage, abnormal noise or rattles. For details, refer to “Wheel Disc, Bolt and Bearing Check” in Section 3D.
2) Check rear wheel bearing for wear, damage, abnormal noise or rattles. For details, refer to “Wheel Disc, Bolt and Bearing Check” in Section 3E.

Suspension System Inspection

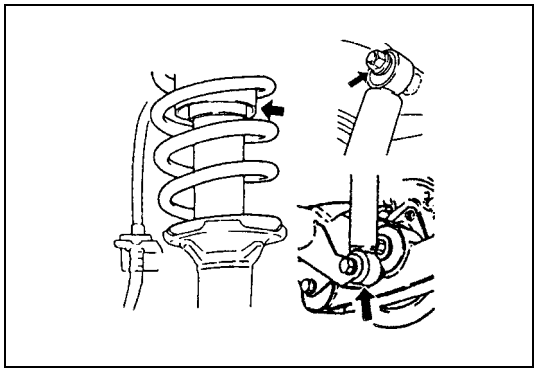

- Inspect front struts & rear shock absorbers for evidence of oil leakage, dents or any other damage on sleeves ; and inspect anchor ends for deterioration.
  Replace defective parts, if any.
- Check front and rear suspension systems for damaged, loose or missing parts ; also for parts showing signs of wear or lack of lubrication.
  Repair or replace defective parts, if any.

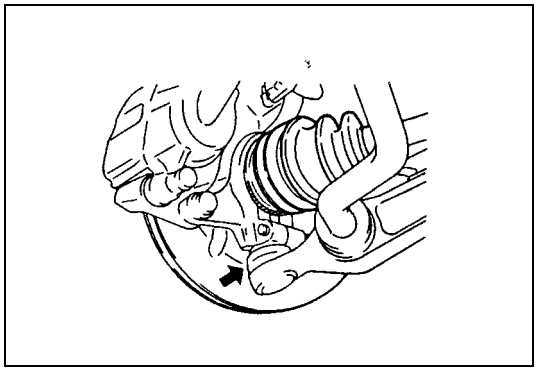

- Check front suspension arm ball joint stud dust seals for leakage, detachment, tear or any other damage.
  Replace defective boot, if any.

Steering System Inspection

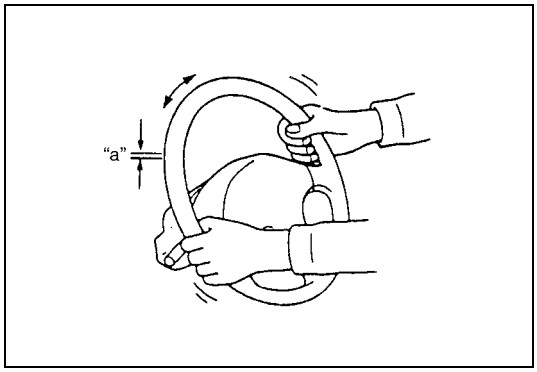

1) Check steering wheel for play and rattle, holding vehicle straight on ground.

   Steering wheel play
   “a”: 0 – 30 mm (0 – 1.1 in.)

2) Check bolts and nuts for tightness and retighten them as necessary. Repair or replace defective parts, if any.

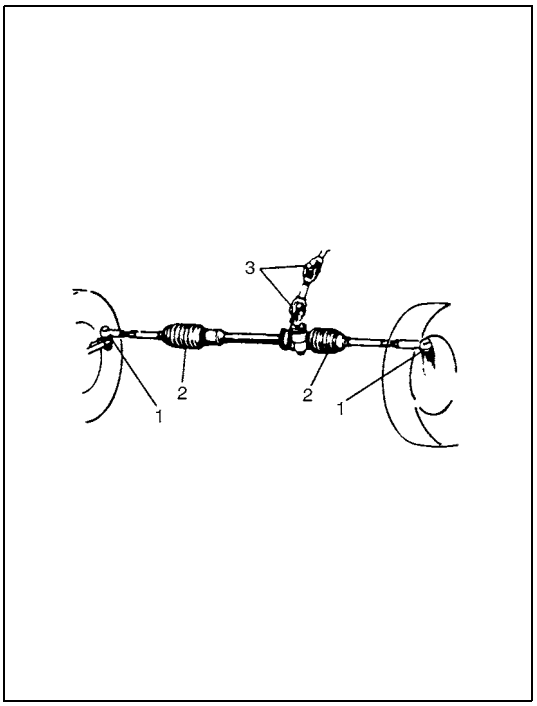

3) Check steering linkage for looseness and damage. Repair or replace defective parts, if any.
4) Check boots (1) and (2) of steering linkage and steering gear case for damage (leak, detachment, tear, etc.). If damage is found, replace defective boot with new one.
   If any dent is found on steering gear case boots, correct it to original shape by turning steering wheel to the right or left as far as it stops and holding it for a few seconds.
5) Check universal joints (3) of steering shaft for rattle and damage. If rattle or damage is found, replace defective part with a new one.
6) Check that steering wheel can be turned fully to the right and left. Repair or replace defective parts, if any.
7) If equipped with power steering system, check also, in addition to above check items, that steering wheel can be turned fully to the right and left more lightly when engine is running at idle speed than when it is stopped. Repair, if found faulty.
8) Check wheel alignment referring to “Front Wheel Alignment Inspection and Adjustment” in Section 3A.

Drive Shaft (Axle) Boots Inspection

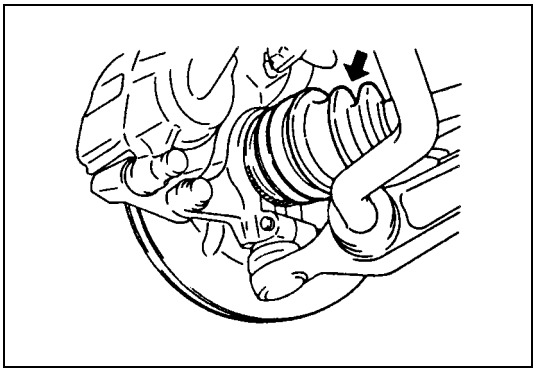

Check drive shaft boots (wheel side and differential side) for leaks, detachment, tear or other damage.
Replace boot as necessary.

Propeller Shafts (4WD) Inspection

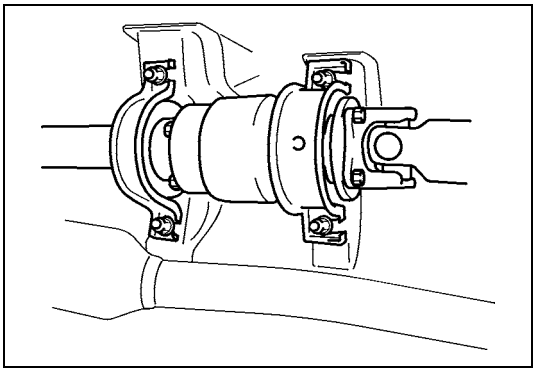

1) Check propeller shaft connecting bolts for looseness. If looseness is found, tighten to specified torque.
2) Check propeller shaft joints for wear, play and damage.
   If any defect is found, replace.
3) Check propeller shaft center support for biting of foreign matter, crack, abnormal noise and damage. If any defect is found, replace.

Manual Transmission Oil Inspection

1) Inspect transmission case for evidence of oil leakage.
   Repair leaky point if any.
2) Make sure that vehicle is placed level for oil level check.
3) Remove oil filler/level plug (1) of transmission.
4) Check oil level.
   Oil level can be checked roughly by means of filler/level plug hole. That is, if oil flows out of level plug hole or if oil level is found up to hole when level plug is removed, oil is properly filled.
   If oil is found insufficient, pour specified oil up to level hole.
   For specified oil, refer to “Manual Transaxle Oil Change” in Section 7A.
5) Apply sealant to filler/level plug and tighten it to specified torque.

Manual Transmission Oil Replacement

1) Place the vehicle level and drain oil by removing drain plug (2).
2) Apply sealant to drain plug after cleaning it and tighten drain plug to specified torque.
3) Pour specified oil up to level hole.
4) Tighten filler plug to specified torque.
   For recommended oil, its amount and tightening torque data, refer to “Manual Transaxle Oil Change” in Section 7A.

Transfer Oil (4WD) and Rear Differential Oil (4WD) Inspection

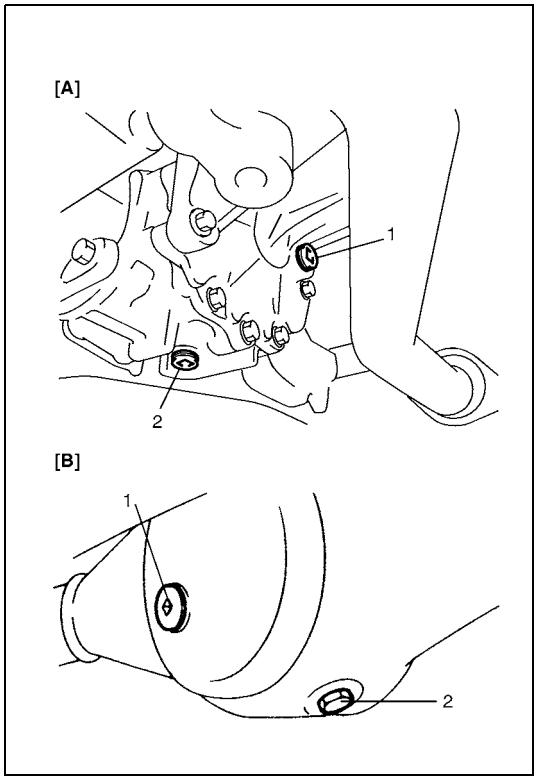

1) Check transfer case or differential for evidence of oil leakage.
   Repair leaky point if any.
2) Make sure that vehicle is placed level for oil level check.
3) Remove level plug of transfer or differential and check oil level.
   Oil level can be checked roughly by means of level plug hole. That is, if oil flows out of level plug hole or if oil level is found up to hole when level plug is removed, oil is properly filled.
   If oil is found insufficient, pour specified amount of specified oil referring to “Transfer Oil Change” in Section 7D or “Rear Differential Gear Oil Change” in Section 7F.

[A] : Transfer
[B] : Rear differential
1. Oil level/filler plug
2. Drain plug

4) Tighten level plug to specified torque referring to “Transfer Oil Change” in Section 7D or “Rear Differential Gear Oil Change” in Section 7F.

Transfer Oil (4WD) and Rear Differential Oil (4WD) Replacement

Change transfer oil and differential oil with new specified oil referring to “Transfer Oil Change” in Section 7D or “Rear Differential Gear Oil Change” in Section 7F.

All Latches, Hinges and Locks Inspection

Doors

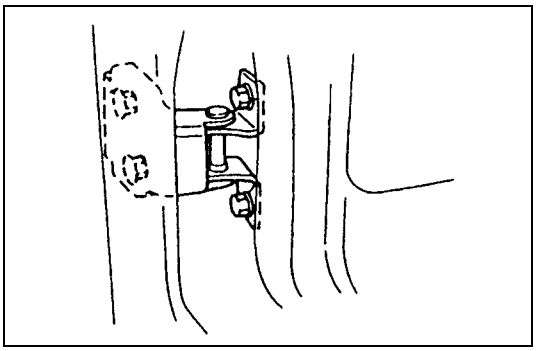

Check that each door of front, rear and back doors opens and closes smoothly and locks securely when closed.
If any malfunction is found, lubricate hinge and latch or repair door lock system.

Engine hood

Check that secondary latch operates properly (check that secondary latch keeps hood from opening all the way even when pulling hood release handle inside vehicle.) Also check that hood opens and closes smoothly and properly and hood locks securely when closed.
If any malfunction is found, lubricate hinge and latch, or repair hood lock system.

Air Conditioning Filter (If Equipped) Inspection

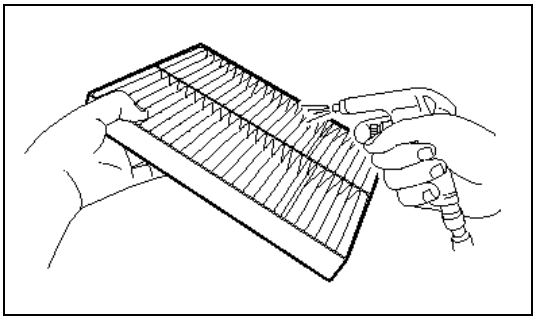

1) Remove the air conditioning filter from the cooling unit referring to “Air Conditioning Filter (If Equipped) Replacement” in this section.
2) Check for dirt and dust. If the air conditioning filter is excessively dirty, replace the air conditioning filter with the new one. If not, go to the next step.
3) Blow compressed air on the air outlet side of the air conditioning filter for removing dust.
4) Install the air conditioning filter into the cooling unit by reversing the removal procedure.

Air Conditioning Filter (If Equipped) Replacement

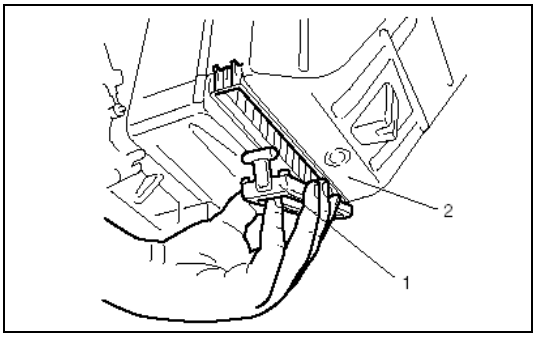

1) Remove the air conditioning filter door (1) from the cooling unit (2).
2) Remove the air conditioning filter from the cooling unit.
3) Install the new air conditioning filter into the cooling unit.
4) Install the air conditioning filter door onto the cooling unit.

Final Inspection

WARNING:

When carrying out road tests, select a safe place where no man or no running vehicle is seen so as to prevent any accident.

SEATS

Check that seat slides smoothly and locks securely at any position. Also check that reclining mechanism of front seat back allows it to be locked at any angle.

SEAT BELT

Inspect belt system including webbing, buckles, latch plates, retractors and anchors for damage or wear.
Check that seat belt is securely locked. If “REPLACE BELT” label on front seat belt is visible, replace belt.

BATTERY ELECTROLYTE LEVEL CHECK

Check that the electrolyte level of all battery cells is between the upper and lower level lines on the case. If battery is equipped with built-in indicator, check battery condition by the indicator.

ACCELERATOR PEDAL OPERATION

Check that pedal operates smoothly without getting caught or interfered by any other part.

ENGINE START

Check engine start for readiness.

WARNING:

Before performing the following check, be sure to have enough room around the vehicle. Then, firmly apply both the parking brake and the regular brakes. Do not use the accelerator pedal. If the engine starts, be ready to turn off the ignition promptly. Take these precautions because the vehicle could move without warning and possibly cause personal injury or property damage.

On automatic transmission vehicles, try to start the engine in each select lever position. The starting motor should crank only in “P” (Park) or “N” (Neutral).
On manual transmission vehicles, place the shift lever in “Neutral,” depress clutch pedal fully any try to start.

EXHAUST SYSTEM CHECK

Check for leakage, cracks or loose supports.

CLUTCH (FOR MANUAL TRANSMISSION)

Check for the following.

- Clutch is completely released when depressing clutch pedal,
- No slipping clutch occurs when releasing pedal and accelerating.
- Clutch itself is free from any abnormal condition.

GEARSHIFT OR SELECT LEVER (TRANSMISSION)

Check gear shift or select lever for smooth shifting to all positions and for good performance of transmission in any position.
With automatic transmission equipped vehicle, also check that shift indicator indicates properly according to which position select lever is shifted to.
With automatic transmission equipped vehicle, make sure that vehicle is at complete stop when shifting select lever to “P” range position and release all brakes.

FOOT BRAKE

Check the followings:

- that brake pedal has proper travel,
- that brake works properly,
- that it is free from noise,
- that vehicle does not pull to one side when brake is applied.
- and that brake do not drag.

PARKING BRAKE

Check that lever has proper travel.

WARNING:

With vehicle parked on a fairly steep slope, make sure nothing is in the way downhill to avoid any personal injury or property damage. Be prepared to apply regular brake quickly even if vehicle should start to move.

Check to ensure that parking brake is fully effective when the vehicle is stopped on the safe slope and brake lever is pulled all the way.

STEERING

- Check to ensure that steering wheel is free from instability, or abnormally heavy feeling.
- Check that the vehicle does not wander or pull to one side.

ENGINE

- Check that engine responds readily at all speeds.
- Check that engine is free from abnormal noise and abnormal vibration.

BODY, WHEELS AND POWER TRANSMITTING SYSTEM

Check that body, wheels and power transmitting system are free from abnormal noise and abnormal vibration or any other abnormal condition.

METERS AND GAUGE

Check that speedometer, odometer, fuel meter, temperature gauge, etc. are operating accurately.

LIGHTS

Check that all lights operate properly.

WINDSHIELD DEFROSTER

Periodically check that air comes out from defroster outlet when operating heater or air conditioning.
Set mode control lever to defroster position and fan switch lever to “HI” position for this check.

Recommended Fluids and Lubricants

Engine oil	SG, SH, SJ or SL grade (Refer to “Engine Oil and Oil Filter Replacement” in this section for engine oil viscosity.)
Engine coolant (Ethylene glycol base coolant)	“Antifreeze / Anticorrosion coolant”
Brake fluid	DOT 4 or SAE J1704
Manual transmission oil	Refer to “Manual Transaxle Oil Change” in Section 7A.
Transfer oil (4WD)	Refer to “Transfer Oil Change” in Section 7D.
Differential oil (4WD)	Refer to “Rear Differential Gear Oil Change” in Section 7F.
Door hinges	Engine oil or water resistance chassis grease
Hood latch assembly	Engine oil or water resistance chassis grease
Key lock cylinder	Spray lubricant

SECTION 1A

HEATER AND VENTILATION

WARNING:

For vehicles equipped with Supplement Restraint (Air Bag) System:

- **Service on and around the air bag system components or wiring must be performed only by an authorized SUZUKI dealer. Refer to "System Components and Wiring Location View" under "General Description" in air bag system section in order to confirm whether you are performing service on or near the air bag system components or wiring. Please observe all WARNINGS and "Service Precautions" under "On-Vehicle Service" in air bag system section before performing service on or around the air bag system components or wiring. Failure to follow WARNINGS could result in unintentional activation of the system or could render the system inoperative. Either or these two conditions may result in severe injury.**
- **Technical service work must be started at least 90 seconds after the ignition switch is turned to the "LOCK" position and the negative cable is disconnected from the battery. Otherwise, the system may be activated by reserve energy in the Sensing and Diagnostic Module (SDM).**

CONTENTS

General Description 1A-2
Heater and Ventilation Construction 1A-2
Heater and Ventilation Wiring Circuit Diagram 1A-3
Diagnosis 1A-4
Heater and Ventilation System Symptom Diagnosis 1A-4
On-Vehicle Service 1A-5
Heater Unit Components 1A-5
Heater Unit Removal and Installation 1A-5
Blower Motor Removal and Installation 1A-6
Blower Motor Inspection 1A-7
Blower Motor Resistor Removal and Installation 1A-8
Blower Motor Resistor Inspection 1A-8
Heater Control Lever Assembly Components 1A-9
Heater Control Lever Assembly Removal and Installation 1A-9
Blower Speed Selector Inspection 1A-11
Rear Defogger Switch Inspection 1A-12
Air Inlet Box Components 1A-13
Air Inlet Box Removal and Installation 1A-13
Center Ventilation Louver Removal and Installation 1A-14
Side Ventilation Louver Removal and Installation 1A-14

General Description

Heater and Ventilation Construction

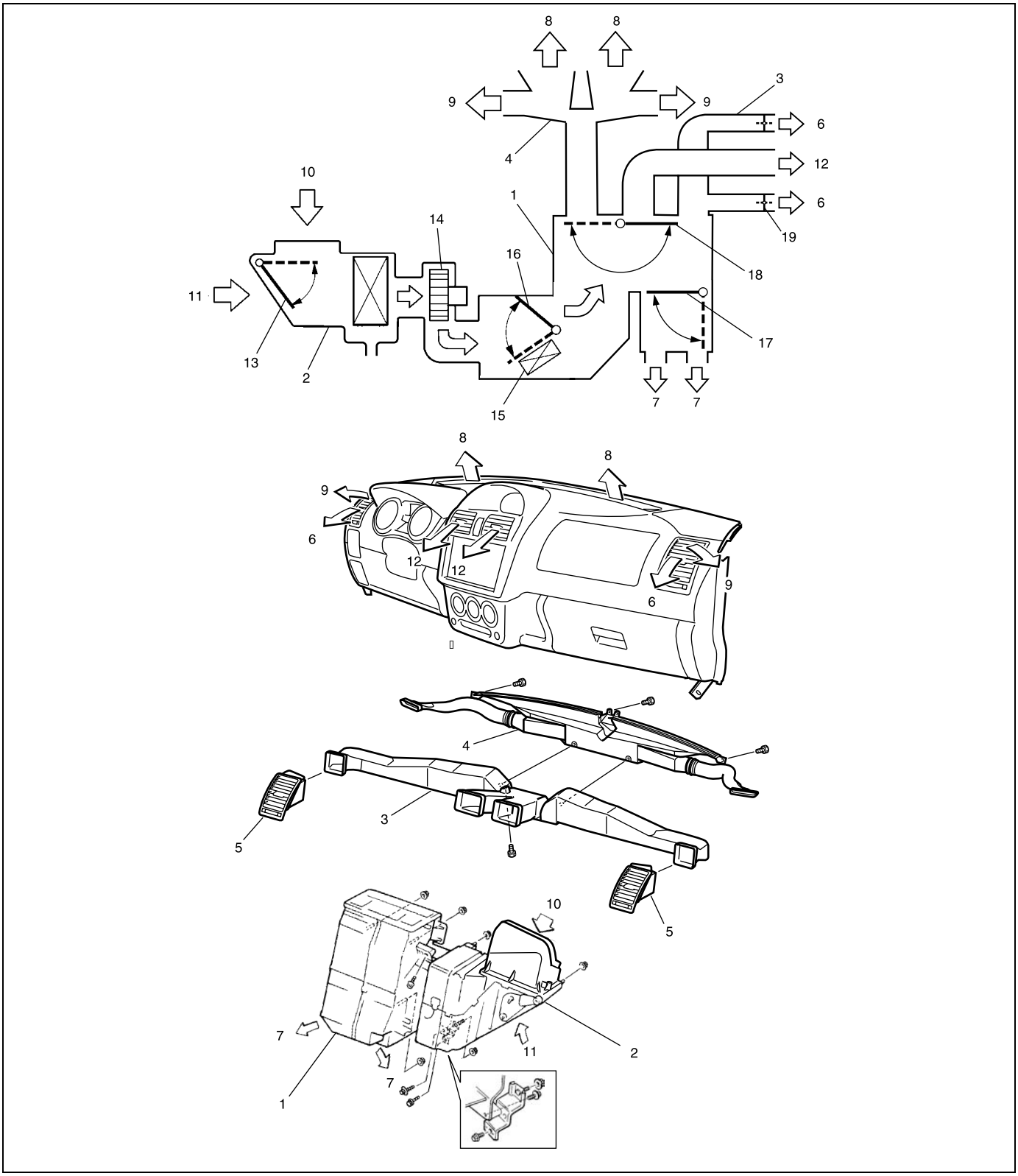

1. Heater unit	6. Side ventilation air	11. Recirculation air	16. Temperature control door
2. Air inlet box	7. Foot air	12. Center ventilation air	17. Foot air control door
3. Ventilator duct	8. Front defroster air	13. Air inlet select door	18. Ventilation defroster air control door
4. Defroster nozzle	9. Side defroster air	14. Blower motor	19. Side ventilation control door
5. Ventilator outlet	10. Fresh air	15. Heater core	

Heater and Ventilation Wiring Circuit Diagram

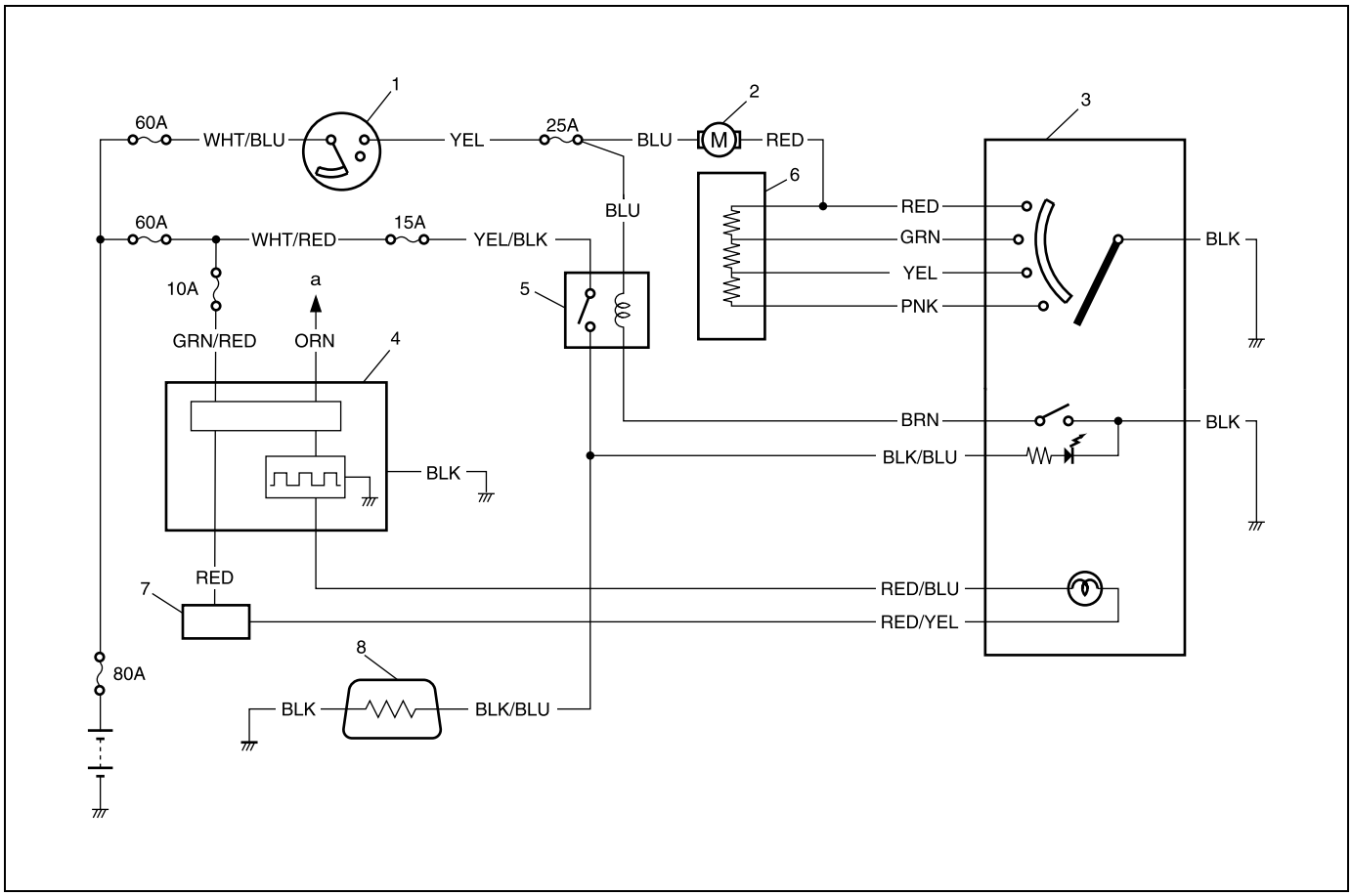

1. Ignition switch	4. Lighting controller	7. Junction connector
2. Blower motor	5. Rear defogger relay	8. Rear defogger
3. Heater control panel	6. Blower motor resistor	a: To lighting switch

Diagnosis

Heater and Ventilation System Symptom Diagnosis

Condition	Possible Cause	Correction
Blower motor dose not work even when its switch is at operating position.	Fuse blown	Check “HEATER” fuse and main heater fuse, and then check for short circuit to ground.
	Blower motor resistor faulty	Check blower motor resistor.
	Blower speed selector faulty	Check blower speed selector.
	Blower motor faulty	Replace blower motor.
	Wiring or grounding faulty	Repair as necessary.
Blower speed selector dose not work when its switch is at maximum air flow position.	Blower speed selector faulty	Check blower speed selector.
	Wiring or grounding faulty	Check wiring and grounding, and then repair as necessary.
Incorrect temperature output.	Control cables broken or binding	Check control cables.
	Temperature control lever faulty	Check temperature control lever.
	Position of control cable clamp is faulty	Check position and adjust it as necessary.
	Temperature control door assembly broken	Repair temperature control door assembly.
	Air ducts clogged	Repair air ducts.
	Heater core leaking or clogged	Replace heater core.
	Heater hoses leaking or clogged	Replace heater hoses.
	Thermostat faulty	Check thermostat by referring to Section 6B.
When mode control lever is changed, air outlet port dose not change or lever position disagree with air outlet port.	Control cable broken or binding	Check control cable.
	Airflow control lever faulty	Check air flow control lever.
	Position of control cable clamp is faulty	Check position and adjust it as necessary.
	Control doors broken	Repair control doors.
	Air ducts leaking or clogged	Repair air ducts.

On-Vehicle Service

Heater Unit Components

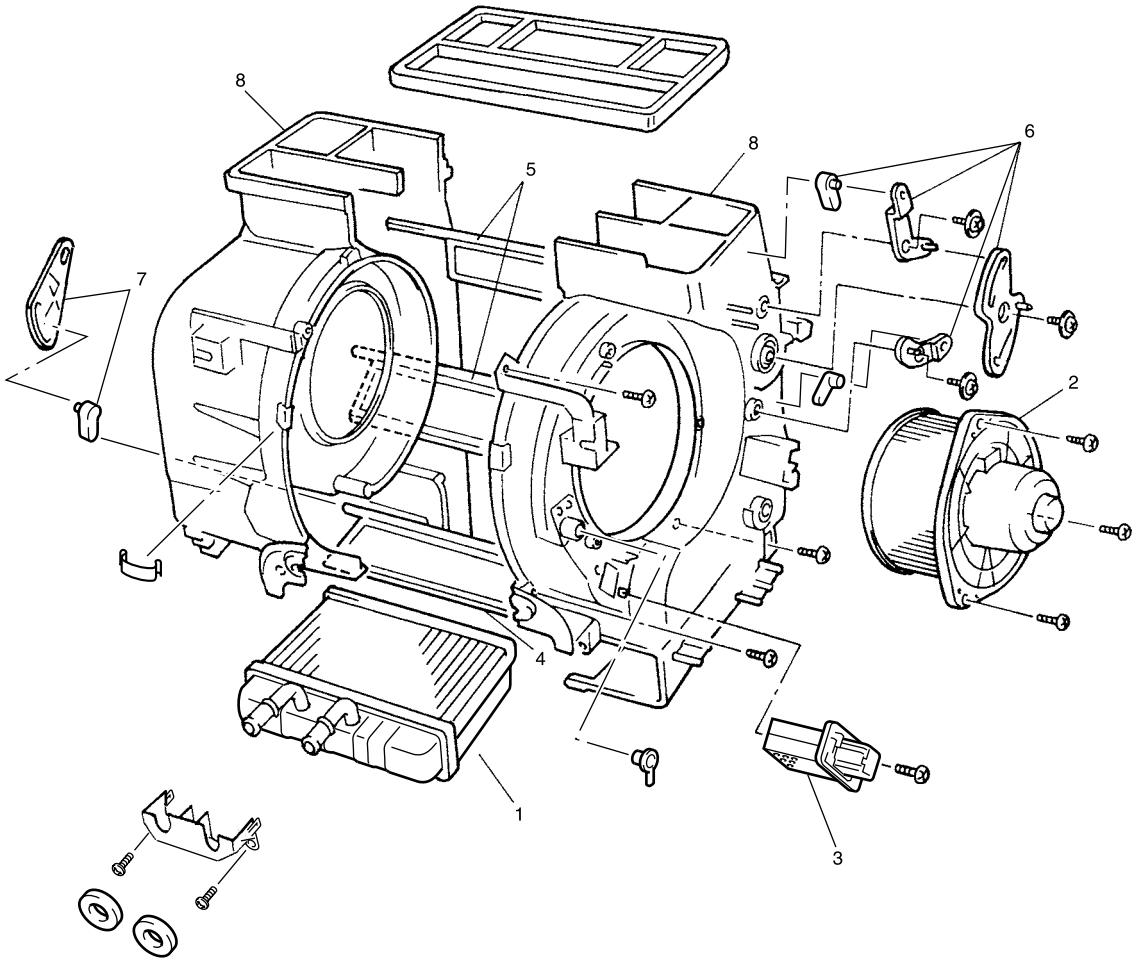

1. Heater core	4. Temperature control door assembly	7. Temperature control lever
2. Blower motor assembly	5. Air flow control door assembly	8. Heater case
3. Blower motor resistor	6. Air flow control lever	

Heater Unit Removal and Installation

REMOVAL

1) Disconnect negative (–) cable at battery.
2) If equipped with air bag system, disable air bag system referring to “Disabling air bag system” in Section 10B.

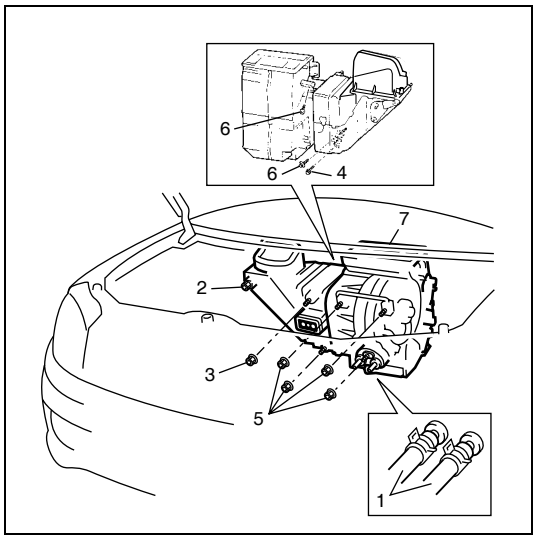

3) Drain engine coolant and disconnect heater hoses (1) from heater unit.
4) Remove instrument panel referring to “Instrument Panel Removal and Installation” in Section 9.
5) Loosen air inlet box (cooling unit) mounting nut (2), and remove mounting nut (3).
6) Remove bolts (4), nuts (5) and screws (6).
7) Remove heater unit (7).

INSTALLATION

Reverse removal procedure install heater unit noting the following instructions.

- When installing each part, be careful not to catch any cable or wiring harness.
- Adjust control cables by referring to “Heater Unit Removal and Installation” in this section.
- Fill engine coolant to radiator.
- If equipped with air bag system, enable air bag system referring to “Enabling air bag system” in Section 10B.

Blower Motor Removal and Installation

REMOVAL

1) Disconnect negative (–) cable at battery.
2) Disable air bag system (if equipped) referring to “Disabling air bag system” in Section 10B.
3) Remove column hole cover.

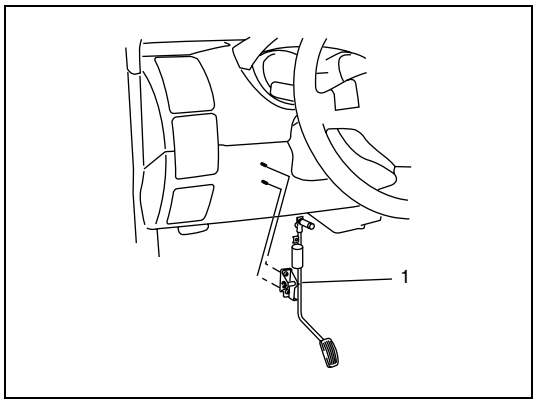

4) Remove the pedal.
   - For RH steering vehicle, remove clutch pedal assembly.
   - For LH steering vehicle, remove accelerator pedal (1) assembly.

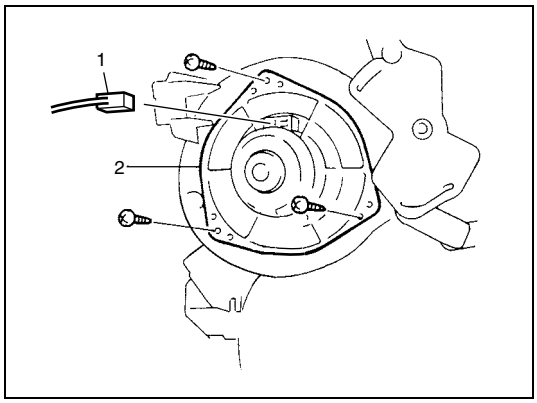

5) Disconnect blower motor coupler (1).
6) Remove blower motor (2).

INSTALLATION

1) Reverse removal procedure for installation.
2) Enable air bag system (if equipped) referring to “Enabling air bag system” in Section 10B.

Blower Motor Inspection

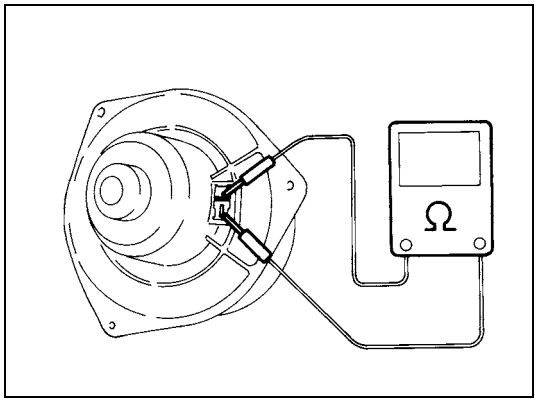

1) Check for continuity between two terminals as shown in figure.
   If there is no continuity, replace blower motor.

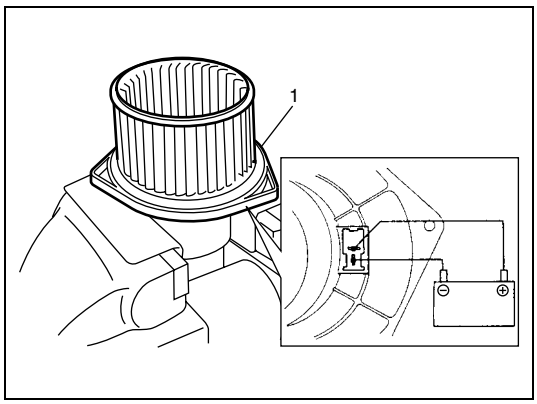

2) Check operation and current.
   a) Fix blower motor (1) by using vise.
   b) Connect battery to blower motor (1) as shown.
   c) Check if blower motor operates smoothly without abnormal noise.
   d) Check if ammeter indicates specified current.
      If measured current is incorrect, replace blower motor.

Blower specified current at 12 V
18 A maximum

Blower Motor Resistor Removal and Installation

REMOVAL

1) Disconnect negative (–) cable at battery.
2) Disable air bag system (if equipped) referring to “Disabling air bag system” in Section 10B.
3) Remove clutch pedal bracket (RH steering vehicle only).
4) Disconnect blower motor resistor coupler.
5) Remove blower motor resistor (1).

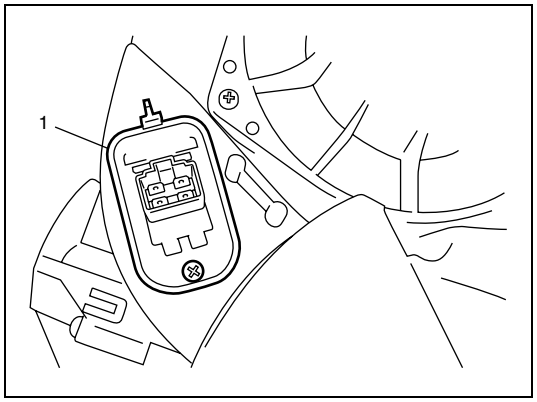

INSTALLATION

1) Reverse removal procedure for installation.
2) Enable air bag system (if equipped) referring to “Enabling air bag system” in Section 10B.

Blower Motor Resistor Inspection

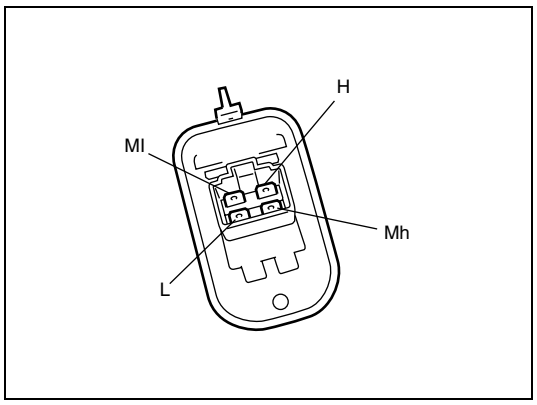

Measure each terminal-to-terminal resistance on resistor.
If measured resistance is incorrect, replace blower motor resistor.

Resistance

H – Mh: Approx. 0.4 Ω at 20 – 25 °C (68 – 77 °F)

Mh – Ml: Approx. 0.6 Ω at 20 – 25 °C (68 – 77 °F)

Ml – L: Approx. 1.0 Ω at 20 – 25 °C (68 – 77 °F)

Heater Control Lever Assembly Components

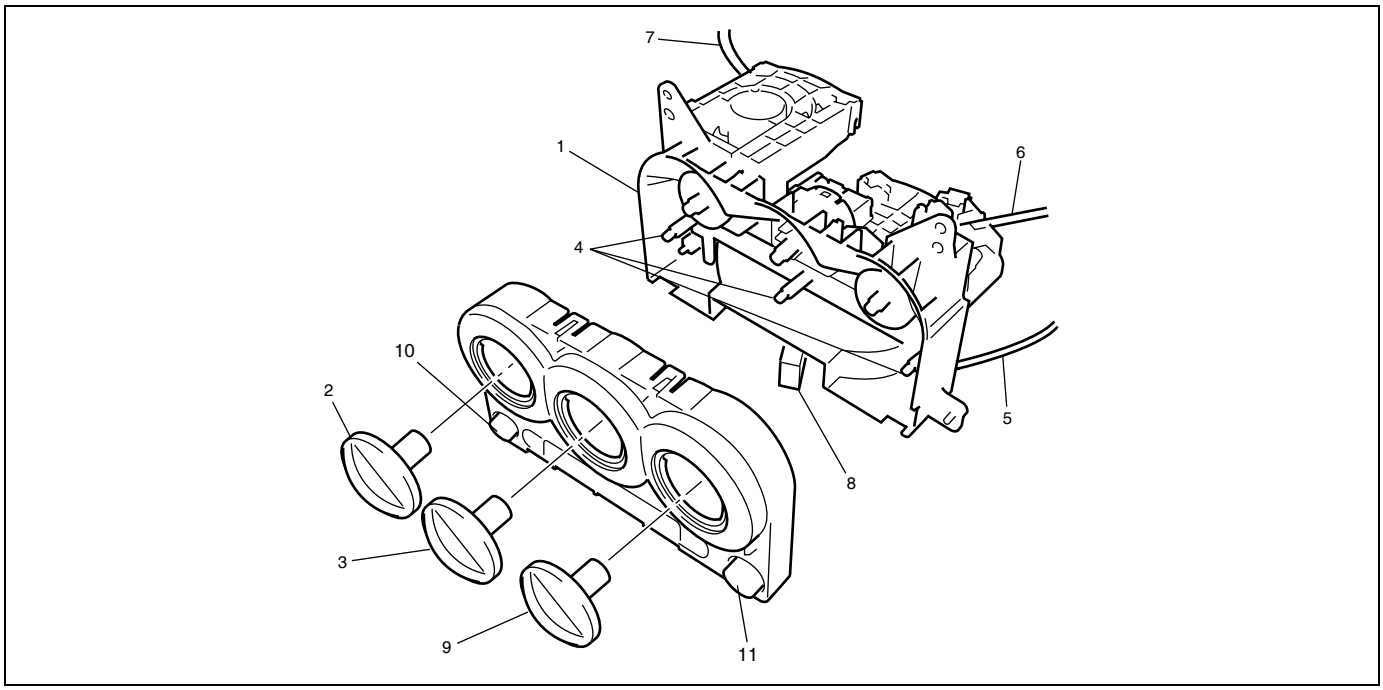

1. Heater control body assembly	4. Bulb	7. Airflow control cable	10. A/C switch
2. Airflow selector	5. Air intake control cable	8. Air intake selector	11. Rear defogger switch
3. Blower speed selector	6. Temperature control cable	9. Temperature selector	

Heater Control Lever Assembly Removal and Installation

REMOVAL

1) Disconnect negative (–) cable at battery.
2) Disable air bag system (if equipped) referring to “Disabling air bag system” in Section 10B.

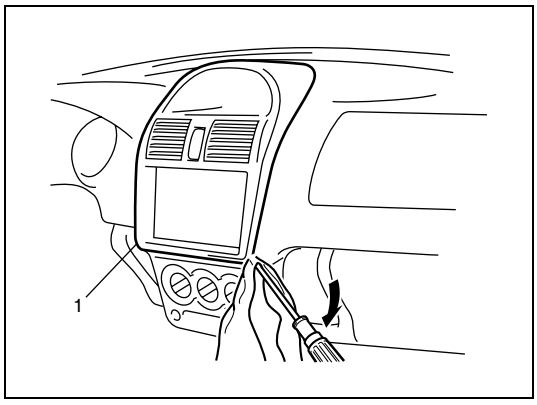

3) Remove center garnish (1) and radio or accessory case (if equipped).
4) Disconnect each heater control cables (airflow control, temperature control and air intake control) from heater unit and air inlet box.
5) Disconnect blower speed selector coupler and rear defogger (and A/C) switch coupler.

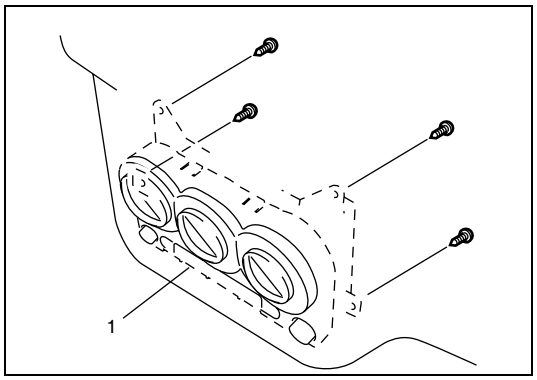

6) Remove heater control lever assembly (1).

INSTALLATION

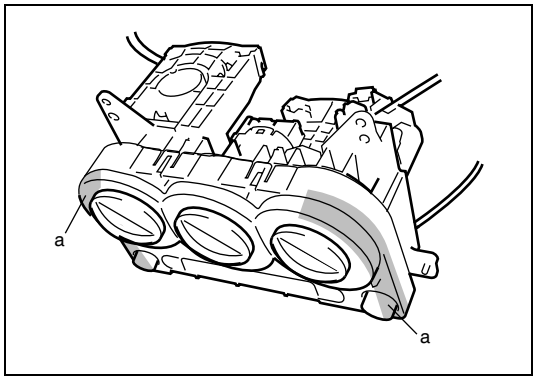

NOTE:

When installing heater control lever assembly, be careful not to damage the unit by taping (a) the unit for prorection.

1) Reverse removal procedure for installation.

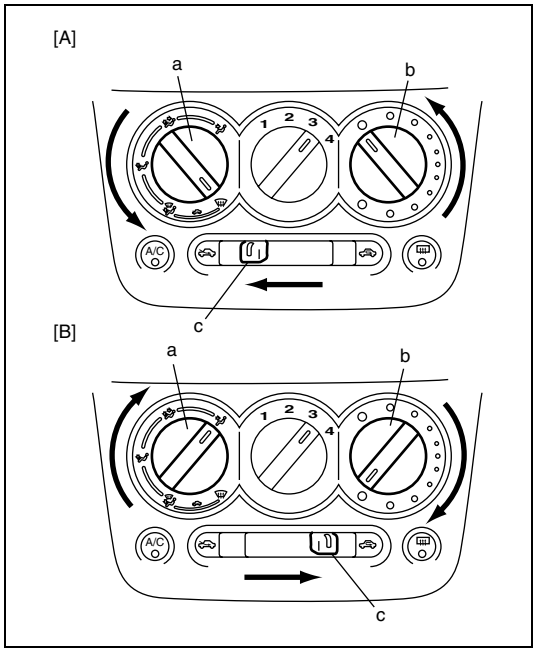

2) Adjust cables as follows.
   a) Move airflow selector (a), temperature selector (b) and air intake selector (c) fully in arrow direction as shown in figure.

A: LH steering vehicle
B: RH steering vehicle

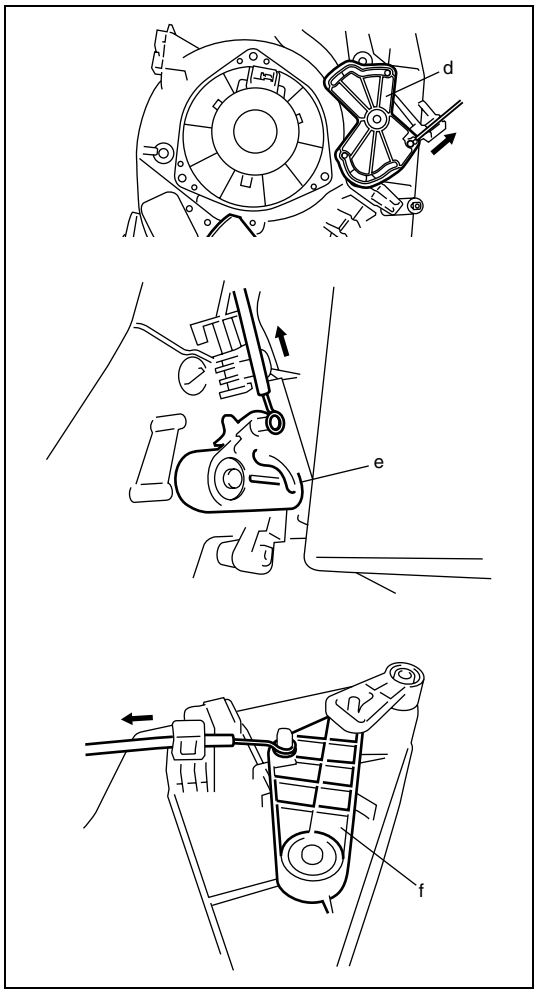

b) Push airflow control lever (d), temperature control lever (e) and door link (f) fully in arrow direction and fix cable with clamp in position as shown in figure.

NOTE:

After installing control cables, make sure that control levers move smoothly and stop at proper position.

3) If equipped with air bag, enable air bag system referring to "Enabling air bag system" in Section 10B.

Blower Speed Selector Inspection

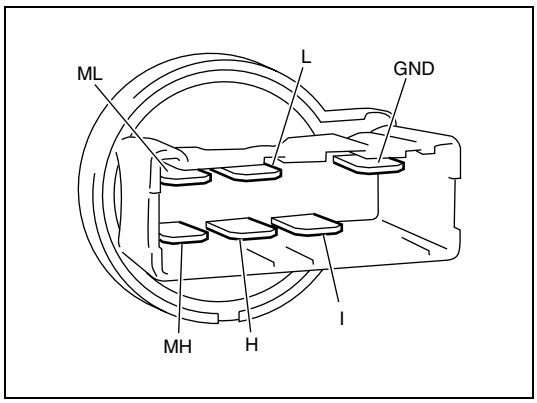

Check blower speed selector for each terminal-to-terminal continuity.

TERMINAL / POSITION	GND	I	L	ML	MH	H
OFF	O					
1	O	O	O			
2	O	O		O		
3	O	O			O	
4	O	O				O

Rear Defogger Switch Inspection

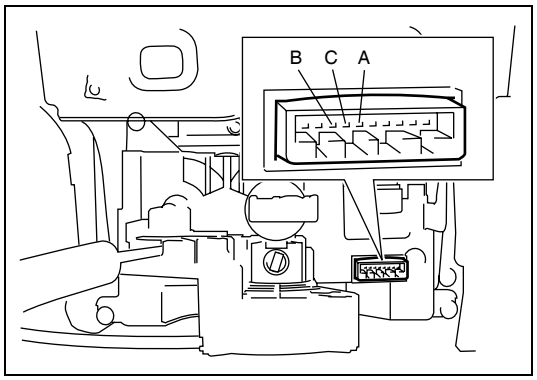

Check for continuity between terminals at each switch position by referring to the table below.

TERMINAL / POSITION	A	B	C
OFF [a]	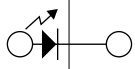		
ON [b]	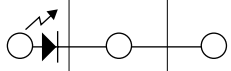		

[a]: Switch button released
[b]: Switch button kept in push

Air Inlet Box Components

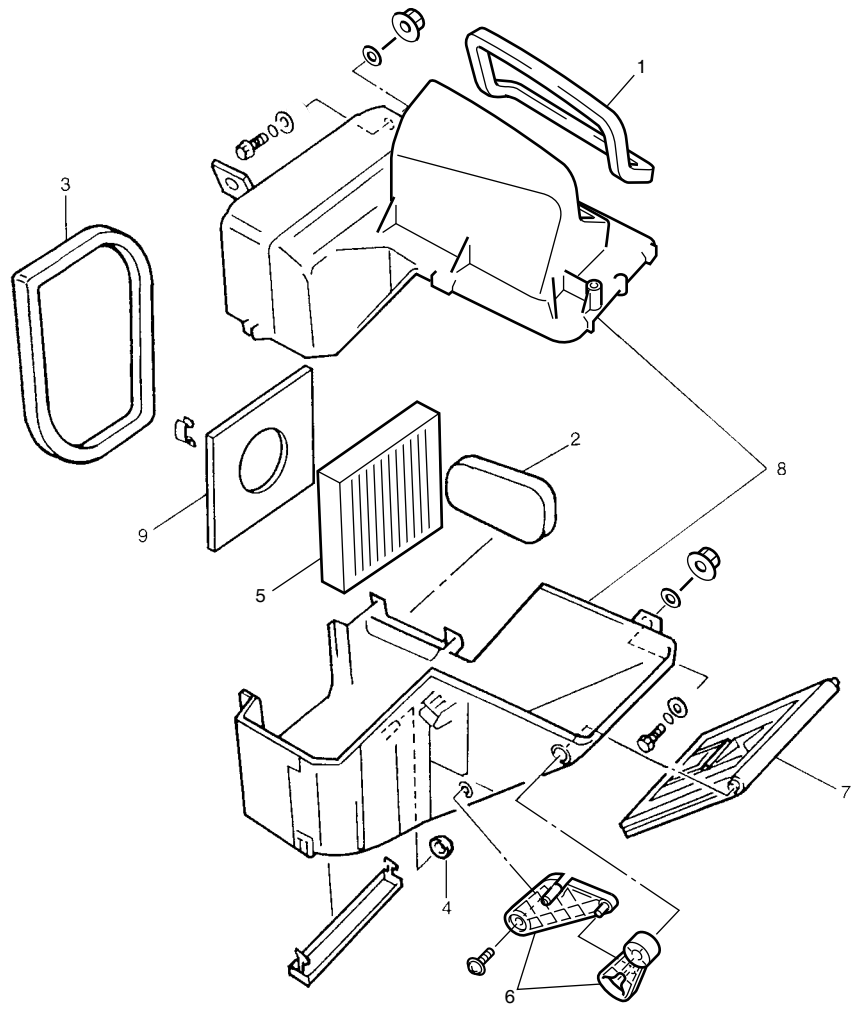

1. Air inlet box	4. Grommet	7. Air inlet door
2. Dash packing	5. Air filter (if equipped)	8. Air inlet box
3. Packing	6. Door link	9. Air resistance board

Air Inlet Box Removal and Installation

Refer to “Cooling Unit (Evaporator) Removal and Installation” in Section 1B.

Center Ventilation Louver Removal and Installation

REMOVAL

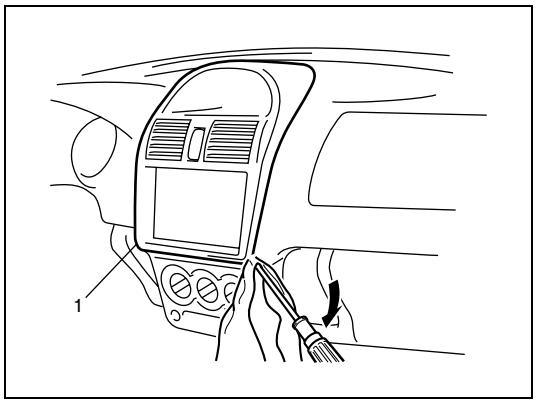

1) Remove center garnish (1).

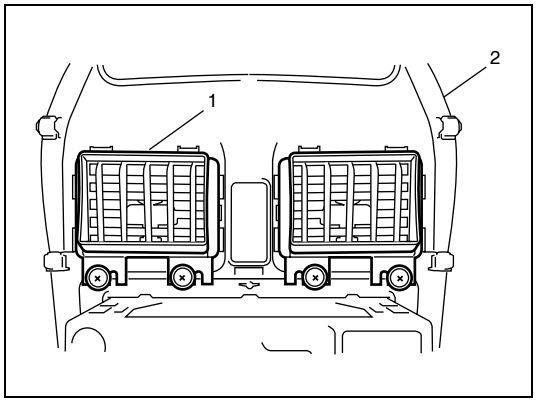

2) Remove center ventilation louver (1) from center garnish (2).

INSTALLATION

Reverse removal procedure for installation.

Side Ventilation Louver Removal and Installation

REMOVAL

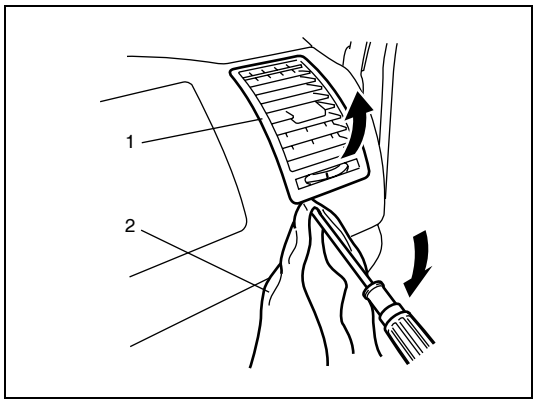

1) Remove ventilation louver (1) as shown.

2. Rag

INSTALLATION

Reverse removal procedure for installation.

SECTION 1B

AIR CONDITIONING (OPTIONAL)

WARNING:

For vehicles equipped with Supplemental Restraint (Air Bag) System:

- **Service on and around the air bag system components or wiring must be performed only by an authorized SUZUKI dealer. Refer to "System Components and Wiring Location View" under "General Description" in air bag system section in order to confirm whether you are performing service on or near the air bag system components or wiring. Please observe all WARNINGS and "Service Precautions" under "On-Vehicle Service" in air bag system section before performing service on or around the air bag system components or wiring. Failure to follow WARNINGS could result in unintentional activation of the system or could render the system inoperative. Either of these two conditions may result in severe injury.**
- **Technical service work must be started at least 90 seconds after the ignition switch is turned to the "LOCK" position and the negative cable is disconnected from the battery. Otherwise, the system may be activated by reserve energy in the Sensing and Diagnostic Module (SDM).**

CAUTION:

The air conditioning system of this vehicle uses refrigerant HFC-134a (R-134a).
None of refrigerant, compressor oil and component parts is interchangeable between two types of A/C: one using refrigerant CFC-12 (R-12) and the other using refrigerant HFC-134a (R-134a).
Be sure to check which refrigerant is used before any service work including inspection and maintenance. For identification between these two types, refer to "Refrigerant Type Construction" in page 1B-2.
When replenishing or changing refrigerant and compressor oil and when replacing parts, make sure that the material or the part to be used is appropriate to the A/C installed in the vehicle being serviced. Use of incorrect one will result in leakage of refrigerant, damage in parts or other faulty condition.

For basic servicing method of the air conditioning system that is not described in this section, refer to AIR CONDITIONINGBASIC MANUAL (P/No: 99520-02130).

CONTENTS

General Description 1B-3
Refrigerant Type Construction 1B-3
Air Conditioning System Description 1B-3
Major Components of A/C System 1B-4
A/C System Wiring Circuit Diagram 1B-5
Diagnosis 1B-6
A/C System Symptom Diagnosis 1B-6
Abnormal Noise Diagnosis of A/C System 1B-9
Abnormal noise from compressor 1B-9
Abnormal noise from magnetic clutch 1B-9
Abnormal noise from tubing 1B-9
Abnormal noise from condenser assembly 1B-9
Abnormal noise from crankshaft pulley 1B-10
Abnormal noise from tension pulley 1B-10
Abnormal noise from A/C evaporator 1B-10
Abnormal noise from blower motor 1B-10
A/C System Performance Inspection 1B-11
Performance diagnosis table 1B-12
A/C System Inspection of ECM 1B-16
Voltage check 1B-16
On-Vehicle Service 1B-18
Operation Procedure for Refrigerant Charge 1B-18
Recovery 1B-19
Replenishing compressor oil 1B-19
When replacing other part 1B-20
Evacuation of A/C system 1B-20
A/C system check for pressure leaks 1B-21
Charge 1B-22
Removing manifold gauge set 1B-24
Leak test 1B-24

Precautions on Servicing A/C System 1B-25
Refrigerant line..... 1B-25
Handling refrigerant HFC-134a (R-134a)..... 1B-26
Refrigerant recovery 1B-26
Refrigerant charge 1B-26
Condenser Assembly On-Vehicle Inspection..... 1B-26
Condenser Assembly Removal and Installation..... 1B-26
Receiver / Dryer Removal and Installation..... 1B-28
Condenser Cooling Fan Motor On-Vehicle Inspection..... 1B-28
Condenser Cooling Fan Assembly Removal and Installation..... 1B-29
Cooling Unit (Evaporator) Components..... 1B-30
Cooling Unit (Evaporator) Removal and Installation..... 1B-30
Cooling Unit (Evaporator) Inspection..... 1B-31
Evaporator Thermistor (Evaporator Temperature Sensor) Removal and Installation..... 1B-31
Evaporator Thermistor (Evaporator Temperature Sensor) Inspection 1B-32
Expansion Valve Inspection..... 1B-32
Expansion Valve Removal and Installation..... 1B-33
Dual Pressure Switch Inspection..... 1B-33
Dual Pressure Switch Removal and Installation 1B-34
A/C Switch Inspection..... 1B-34
Condenser Cooling Fan Relay (No.1 and No.2) Inspection..... 1B-35
Compressor Relay Inspection..... 1B-36
Compressor Assembly Removal and Installation 1B-36
Compressor Drive Belt Inspection and Adjustment..... 1B-37
Compressor Drive Belt Replacement 1B-38
Compressor Assembly Components 1B-38
Magnet Clutch Inspection 1B-39
Magnet Clutch Removal and Installation 1B-39
Thermal Switch Inspection..... 1B-41
Thermal Switch Removal and Installation 1B-41
Relief Valve Inspection 1B-42
Relief valve Removal and Installation..... 1B-42
Specifications 1B-43
Tightening Torque Specifications 1B-43
Special Tools and Equipment 1B-43
Required Service Material 1B-43
Special Tool..... 1B-43

General Description

Refrigerant Type Construction

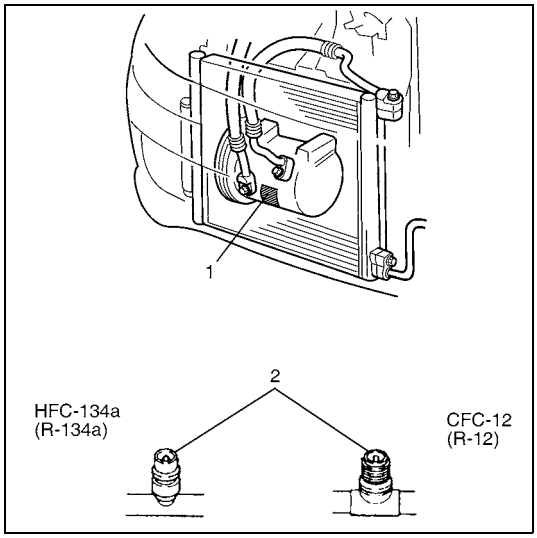

Whether the A/C in the vehicle being serviced uses HFC-134a (R-134a) or CFC-12 (R-12) is indicated on label (1) on the compressor. Also, it can be checked by the shape of the service (charge) valve (2).

Air Conditioning System Description

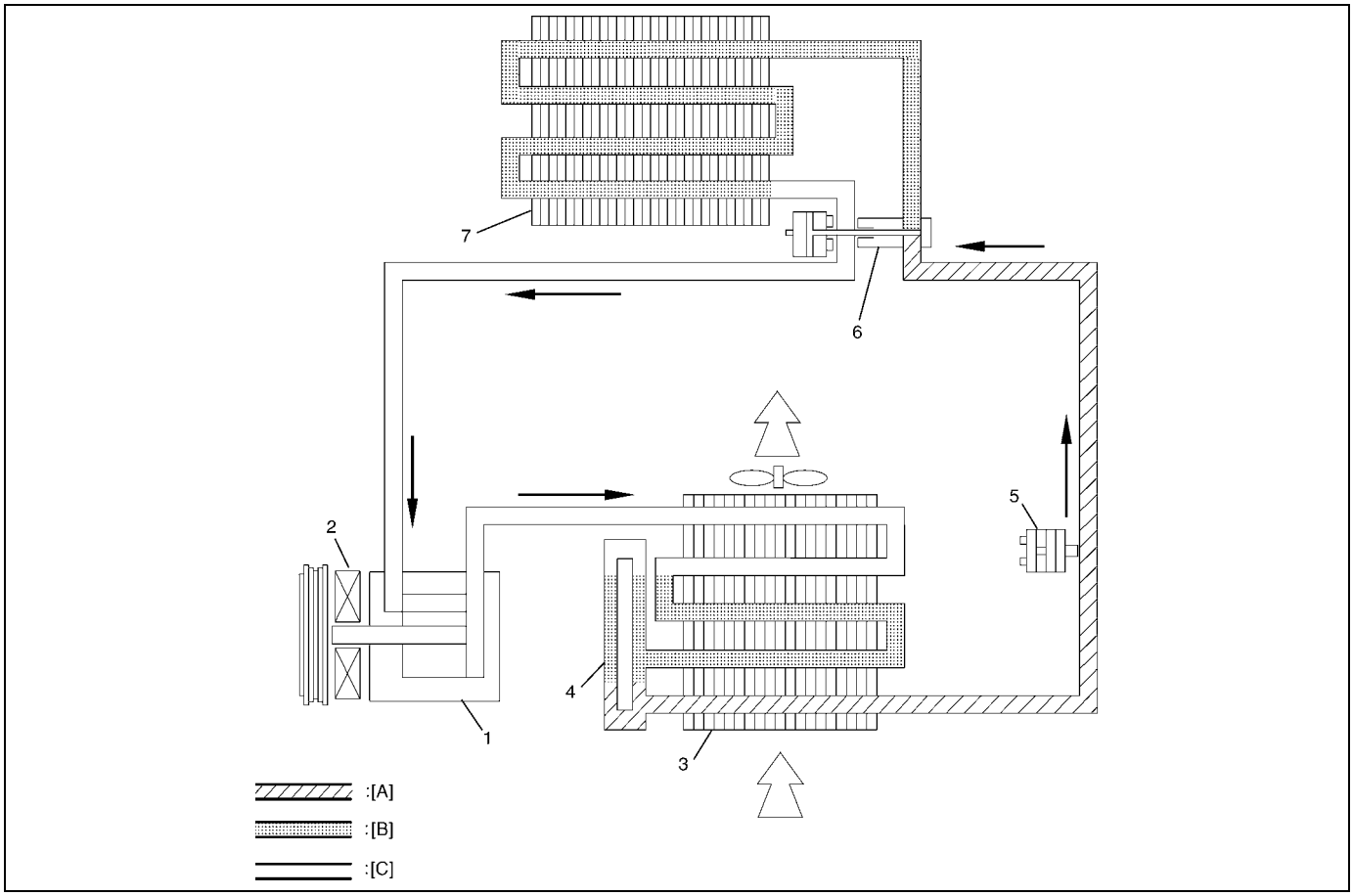

[A]: Liquid	1. Compressor	4. Receiver / dryer	7. Evaporator
[B]: Vapor	2. Magnet clutch	5. Pressure switch	
[C]: Superheated vapor	3. Condenser	6. Expansion valve	

Major Components of A/C System

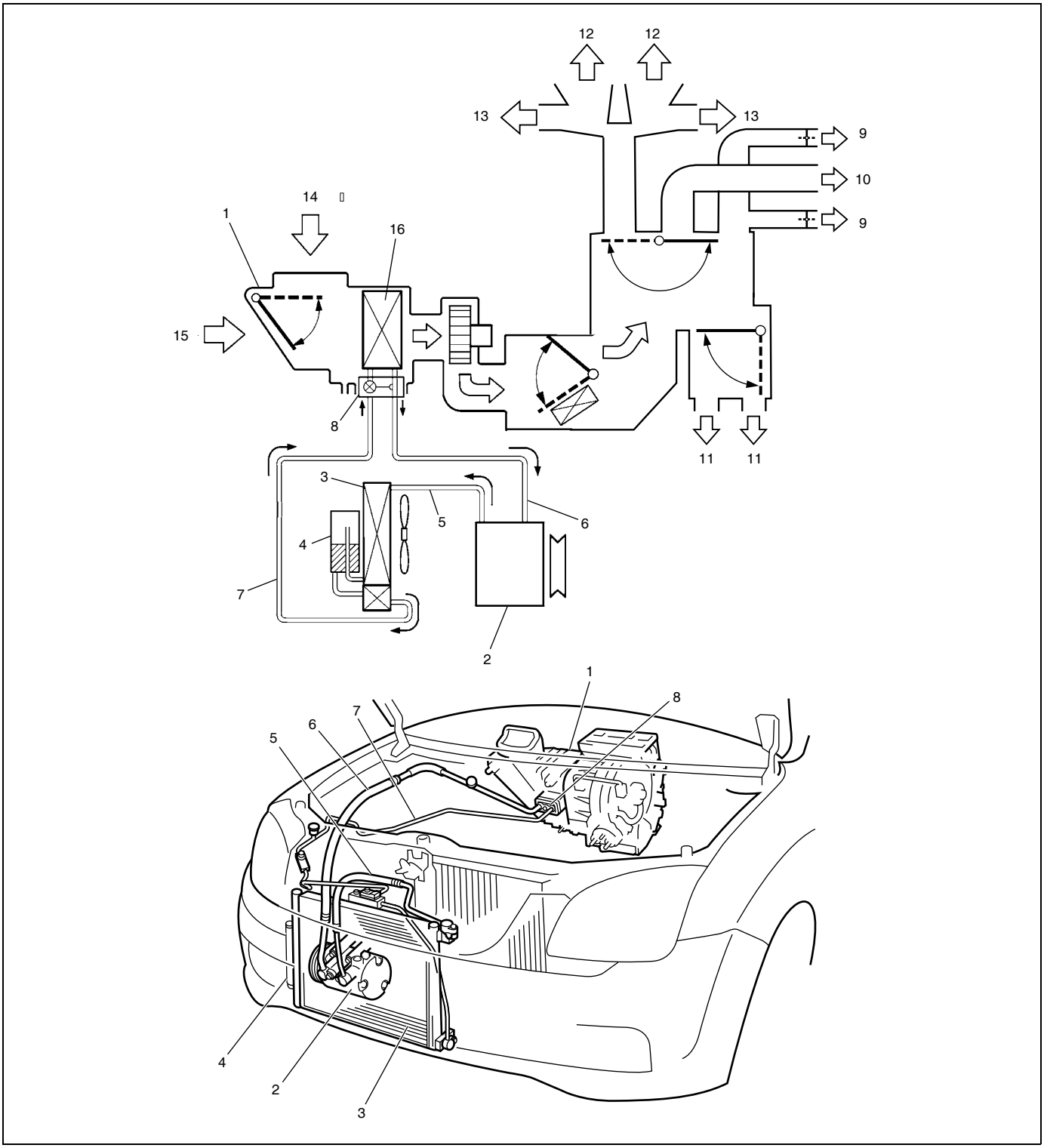

1. Cooling unit	5. Discharge hose	9. Side ventilation air	13. Side defroster air
2. Compressor	6. Suction hose	10. Center ventilation air	14. Fresh air
3. Condenser assembly	7. Liquid pipe	11. Foot air	15. Recirculation air
4. Receiver / dryer	8. Expansion valve	12. Front defroster air	16. Evaporator

A/C System Wiring Circuit Diagram

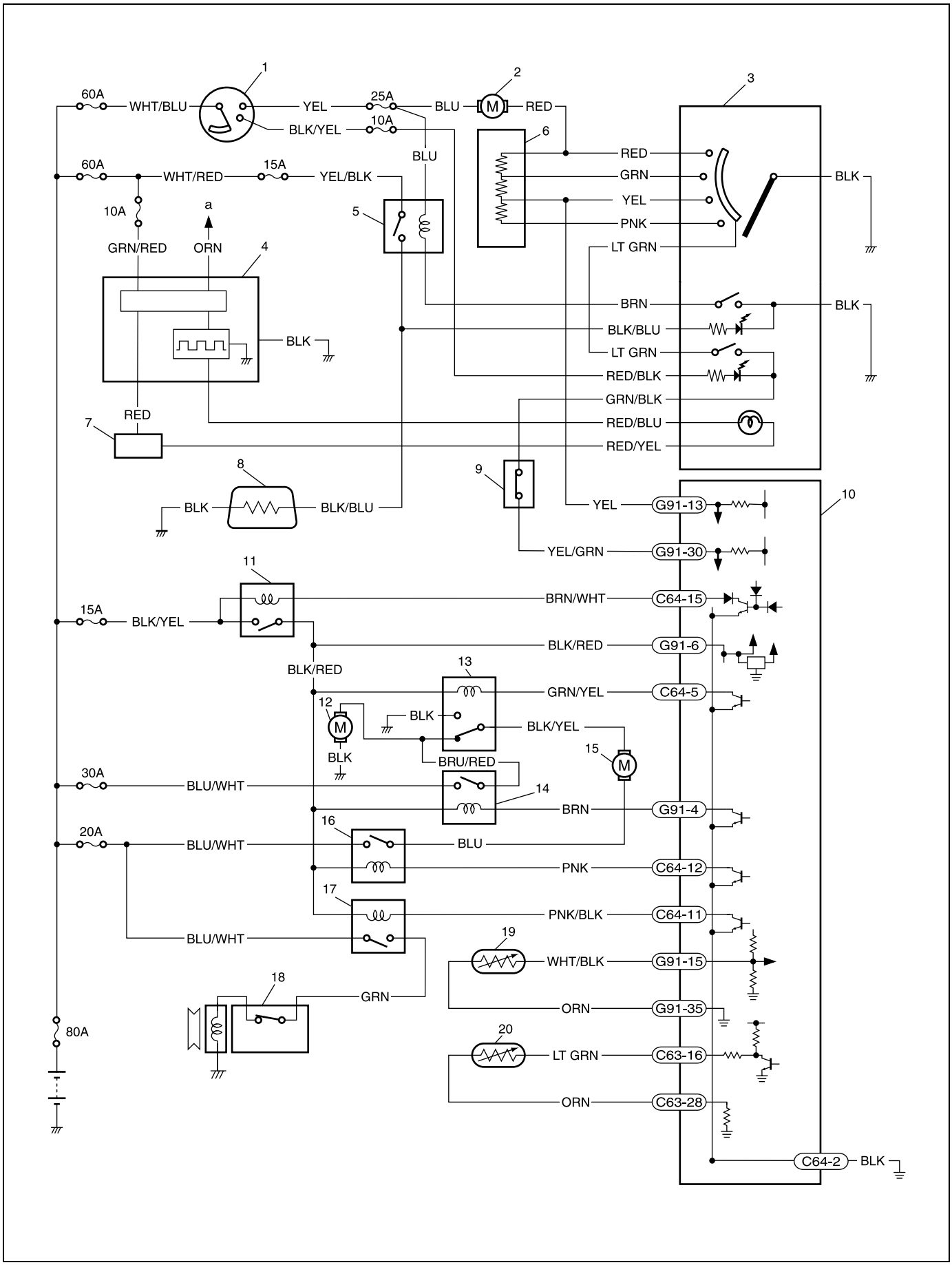

1. Ignition switch	7. Junction connector	13. Condenser cooling fan relay No.2	19. A/C evaporator thermistor
2. Blower motor	8. Rear defogger	14. Radiator cooling fan relay	20. ECT sensor
3. Heater control panel	9. Dual pressure switch	15. Condenser cooling fan motor	a: To lighting switch
4. Lighting controller	10. ECM	16. Condenser cooling fan relay No.1	
5. Rear defogger relay	11. Main relay	17. Compressor relay	
6. Blower motor resistor	12. Radiator cooling fan motor	18. Compressor	

Diagnosis

A/C System Symptom Diagnosis

Condition	Possible Cause	Correction
No cool air comes out (A/C system does not operate)	No refrigerant	Perform recovery, evacuation and charge.
	Fuse blown	Check related fuses, and check short circuit to ground.
	A/C switch faulty	Check A/C switch.
	Blower speed selector faulty	Check blower speed selector referring to “Blower Speed Selector Inspection” in Section 1A.
	A/C evaporator temperature sensor faulty	Check A/C evaporator temperature sensor.
	Dual pressure switch faulty	Check dual pressure switch.
	Wiring or grounding faulty	Repair as necessary.
	ECT sensor faulty	Check ECT sensor referring to Section 6E1.
	ECM and/or its circuit faulty	Check ECM and its circuit referring to Section 6E1.
	Magnet clutch faulty	Check magnet clutch.
	Compressor drive belt loosened or broken	Adjust or replace drive belt.
	Compressor faulty	Check compressor.
	Compressor relay faulty	Check compressor relay.
No cool air comes out (A/C condenser cooling fan motor does not operate)	Fuse blown	Check related fuses, and check for short circuit to ground.
	Wiring or grounding faulty	Repair as necessary.
	Condenser cooling fan motor relay faulty	Check condenser cooling fan motor relay.
	Condenser cooling fan motor faulty	Check condenser cooling fan motor.
	ECM and/or its circuit faulty	Check ECM and its circuit referring to Section 6E1.

Condition	Possible Cause	Correction
No cool air comes out (Blower motor does not operate)	Fuse blown	Check related fuses, and check for short circuit to ground.
	Blower motor resistor faulty	Check blower motor resistor referring to “Blower Motor Resistor Inspection” in Section 1A.
	Blower speed selector faulty	Check blower speed selector referring to “Blower Speed Selector Inspection” in Section 1A.
	Wiring or grounding faulty	Repair as necessary.
	Blower motor faulty	Check blower motor referring to “Blower Motor Inspection” in Section 1A.
Cool air does not come out or insufficient cooling (A/C system normal operation)	Insufficient or excessive charge of refrigerant	Check charge of refrigerant and system for leaks.
	Condenser clogged	Check condenser.
	A/C evaporator clogged or frosted	Check A/C evaporator and A/C evaporator temperature sensor.
	A/C evaporator temperature sensor faulty	Check A/C evaporator temperature sensor.
	Expansion valve faulty	Check expansion valve.
	Desiccant clogged	Check receiver / dryer
	Compressor drive belt loosened or broken	Adjust or replace drive belt.
	Magnetic clutch faulty	Check magnetic clutch.
	Compressor faulty	Check compressor.
	Air in A/C system	Replace desiccant, and perform evacuation and charge.
	Air leaking from heater and cooling unit or air duct	Repair as necessary.
	Heater and ventilation system faulty	Check air inlet box (cooling unit), heater control assembly and heater unit.
	Blower motor faulty	Check blower motor referring to “Blower Motor Inspection” in Section 1A.
	Excessive compressor oil existing in A/C system	Pull out excess compressor oil in A/C system circuit, and check compressor.
Cool air does not come out only intermittently	Wiring connection faulty	Repair as necessary.
	Expansion valve faulty	Check expansion valve.
	Excessive moisture in A/C system	Replace receiver / dryer, and perform evacuation and charge.
	Magnetic clutch faulty	Check magnetic clutch.
	Excessive charge of refrigerant	Check charge of refrigerant.

Condition	Possible Cause	Correction
Cool air comes out only at high speed	Condenser clogged	Check condenser.
	Insufficient charge of refrigerant	Check for charge of refrigerant.
	Air in A/C system	Replace receiver / dryer, and perform evacuation and charge.
	Compressor drive belt loosened or broken	Adjust or replace drive belt.
	Compressor faulty	Check compressor.
	Condenser cooling fan motor faulty	Check condenser cooling fan motor.
	Condenser cooling fan motor relay faulty	Check condenser cooling fan motor relay.
	Condenser cooling fan blade faulty	Check condenser cooling fan blade.
Cool air does not come out only at high speed	Excessive charge of refrigerant	Check for charge of refrigerant.
	A/C evaporator frosted	Check A/C evaporator and A/C evaporator temperature sensor.
Insufficient airflow of cooled air	A/C evaporator clogged or frosted	Check A/C evaporator and A/C evaporator temperature sensor.
	Air leaking from cooling unit or air duct	Repair as necessary.
	Blower motor faulty	Check blower motor referring to “Blower Motor Inspection” in Section 1A.
	Wiring or grounding faulty	Repair as necessary.

Abnormal Noise Diagnosis of A/C System

Abnormal noise from compressor

Condition	Possible Cause	Correction
During compressor operation, a rumbling noise is heard proportional to engine revolutions.	Inadequate clearance in scroll area	Replace compressor.
A loud noise is heard at a certain rpm, disproportionately to engine revolution.	Loose or faulty compressor drive belt	Adjust drive belt tension or replace drive belt.
	Loose compressor mounting bolts	Tighten mounting bolts.
A loud rattle is heard at low engine rpm.	Loose compressor clutch plate bolt	Tighten clutch plate bolt.
		Replace compressor if it was operated in this condition for a long time.

Abnormal noise from magnetic clutch

Condition	Possible Cause	Correction
A rumbling noise is heard when compressor is not operating.	Worn or damaged bearings	Replace magnet clutch assembly.
A chattering noise is heard when compressor is engaged.	Faulty magnet clutch clearance (excessive clearance)	Adjust magnet clutch clearance.
	Worn magnet clutch friction surface	Replace magnet clutch assembly.
	Compressor oil leaked from shaft seal, contaminating the friction surface	Replace compressor body assembly.

Abnormal noise from tubing

Condition	Possible Cause	Correction
A droning noise is heard from inside of the vehicle, but not particularly noticeable in engine compartment.	Faulty tubing clamps	Reposition clamps or increase the number of clamps.
	Resonance caused by pulsation from variations in refrigerant pressure	Attach a silencer to tubing, or modify its position and length.

Abnormal noise from condenser assembly

Condition	Possible Cause	Correction
Considerable vibration in condenser assembly	Resonance from condenser assembly bracket and body	Firmly insert a silencer between condenser assembly bracket and body.
	Loose condenser cooling fan mounting bolts	Tighten mounting bolts.
	Faulty condenser cooling fan blade	Replace condenser cooling fan blade.

Abnormal noise from crankshaft pulley

Condition	Possible Cause	Correction
A loud rattling noise is heard at idle or sudden acceleration.	Loosen crankshaft pulley bolt	Tighten bolt.

Abnormal noise from tension pulley

Condition	Possible Cause	Correction
Clattering noise is heard from pulley.	Worn or damaged bearing	Replace tension pulley.
Pulley cranks upon contact.	Cracked or loose bracket	Replace or tighten bracket.

Abnormal noise from A/C evaporator

Condition	Possible Cause	Correction
Whistling sound is heard from A/C evaporator.	Depending on the combination of the interior/exterior temperatures, engine rpm and refrigerant pressure, the refrigerant flowing out of the expansion valve may, under certain conditions, make a whistling sound	At times, slightly decreasing refrigerant volume may stop this noise.
		Inspect expansion valve and replace if faulty.

Abnormal noise from blower motor

Condition	Possible Cause	Correction
Blower motor emits a chirping sound in proportion to its speed of rotation.	Worn or damaged motor brushes or commutator	Replace blower motor.
Fluttering noise or loud droning noise is heard from blower motor.	Leaves or other debris introduced from fresh air inlet to blower motor	Remove debris and make sure that the screen at fresh air inlet is intact.

A/C System Performance Inspection

1) Confirm that vehicle and environmental conditions are as follows.
   – Vehicle is not exposed to direct sun.
   – Ambient temperature is within 15 °C – 35 °C (59 °F – 95 °F).

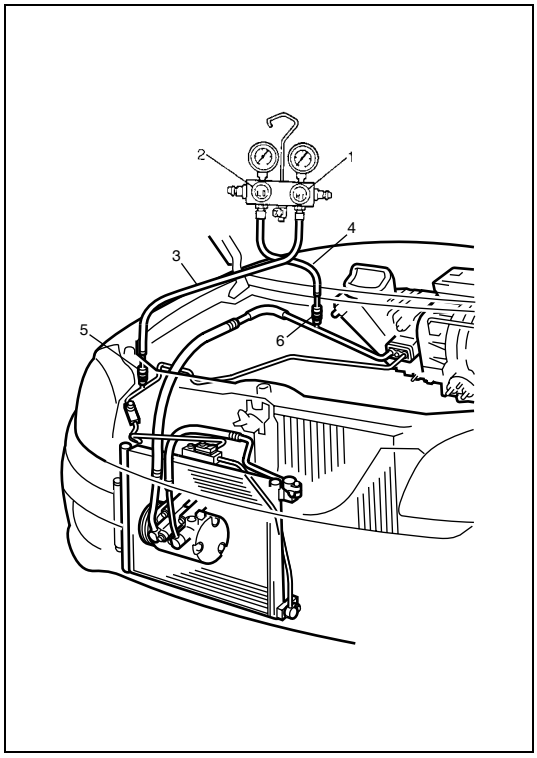

2) Make sure that high pressure valve (1) and low pressure valve (2) of manifold gauge are firmly closed.
3) Connect high pressure charging hose (3) to high pressure service valve (5) on vehicle, and connect low pressure charging hose (4) to low pressure service valve (6) on vehicle.
4) Bleed the air in charging hoses (3) and (4) by loosening their nuts respectively on manifold gauge, utilizing the refrigerant pressure. When a hiss is heard, immediately tighten nut.

CAUTION:
Do not interchange high and low pressure charging hoses by mistake.

5) Warm up engine to normal operating temperature and keep it at specified idle speed.
6) Turn A/C switch ON, and set blower selector at “4” maximum, temperature selector at maximum cold, airflow selector at face, air intake selector at recirculation position. (Confirm that A/C compressor and condenser fans are working.)
7) Keep all windows, doors and engine food open.

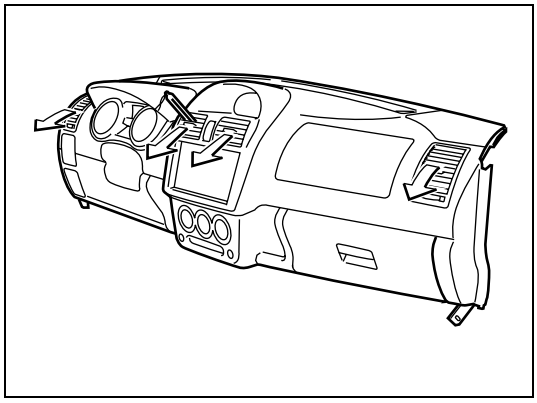

Performance diagnosis condition

A/C inlet air temperature	**15 – 35 °C (59 – 95 °F)**
Engine rpm	**Keep 1,500 r/min.**
Blower fan switch	**“4” (maximum position)**
Temperature control	**Maximum cold**
Air outlet control	**Face**
Vehicle Doors	**All open**
Air inlet door position	**Recirculation**

8) With about 20 mm (0.8 in.) of dry bulb thermometer inserted into center duct air outlet and another one set near evaporator air inlet, read temperature difference between air outlet and air inlet.

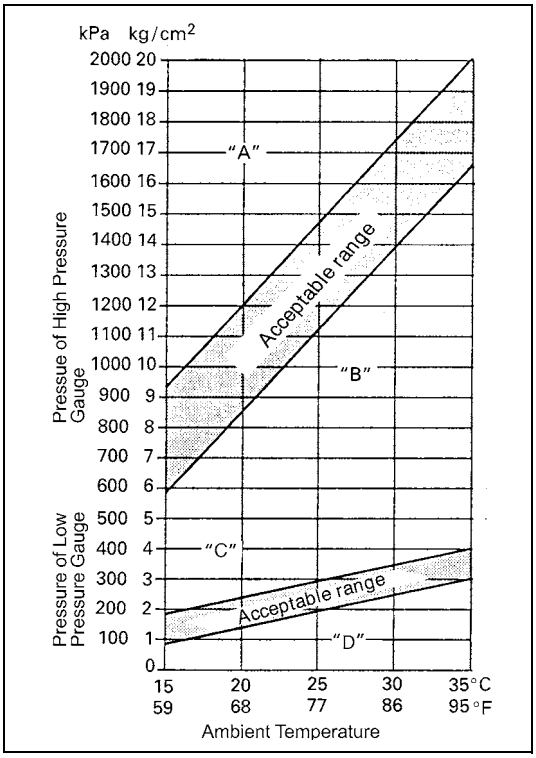

9) Check for each pressure of low side and high side if it is within shaded range of left graph.
   If each gauge reading is out of specified pressure, correct defective part referring to following Test Diagnosis table.

NOTE:

Pressure registered on gauge varies with ambient temperature. Therefore, use left graphs when determining if pressures are normal or not.

Example:

Gauges should read as follows when ambient temperature is 30 °C (86 °F)	
Pressure on high pressure gauge (HI):	**1400 – 1750 kPa** **14.0 – 17.5 kg/cm²**
Pressure on low pressure gauge (LO):	**230 – 350 kPa** **2.3 – 3.5 kg/cm²**

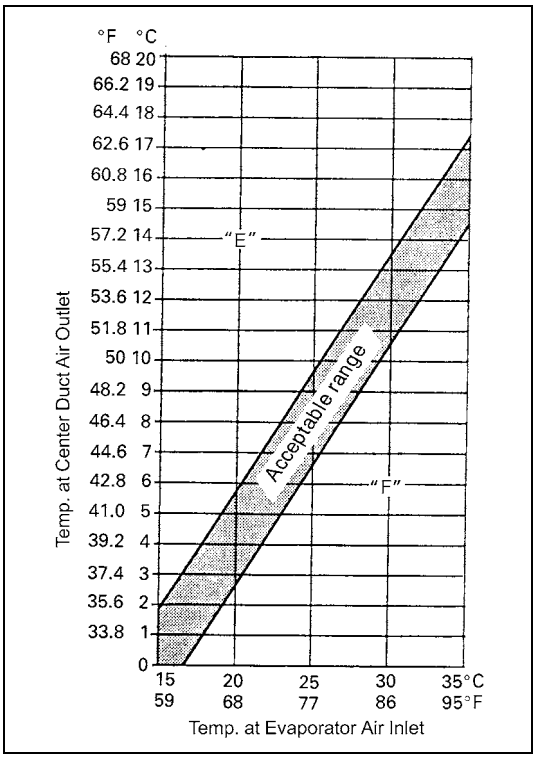

10) Check inlet port temperature-to-outlet port temperature relationship using graph at the left.
    For example, if evaporator inlet port temperature is 25 °C (77 °F) and center duct air outlet temperature is 8 °C (46.4 °F), their crossing point is within acceptable range as shown in graph at the left.
    In this case, cooling performance is satisfactory and proper.
11) If crossing point is out of acceptable range, diagnose trouble referring to following Test Diagnosis table.

Performance diagnosis table

NOTE:

If ambient temperature is approximately 30 °C (86 °F), it is possible to diagnose A/C system in detail referring to "DETAILED DIAGNOSIS TABLE (AMBIENT TEMPERATURE AT 30°C (86°F))" under "A/C System Performance Inspection" in this section.

HIGH PRESSURE GAUGE

Condition	Possible Cause	Correction
Pressure high ("A" area of high side graph)	Refrigerant overcharged	Recharge.
	Expansion valve frozen or clogged	Check expansion valve.
	Clogged refrigerant passage of high side	Clean or replace.
	Condenser cooling fan malfunction (Insufficient cooling of condenser)	Check condenser cooling fan.
	Dirty or bent condenser fins (Insufficient cooling of condenser)	Clean or repair.
	Compressor malfunction (Insufficient oil etc.)	Check compressor.
	Engine overheat	Check engine cooling system referring to Section 6B.
Pressure low ("B" area of high side graph)	Insufficient refrigerant (Insufficient charge or leakage)	Check for leakage, repair if necessary and recharge.
	Expansion valve malfunction (valve opens too wide)	Check expansion valve.
	Compressor malfunction (Insufficient compression)	Check compressor.

LOW PRESSURE GAUGE

Condition	Possible Cause	Correction
Pressure high ("C" area of low side graph)	Expansion valve malfunction (valve opens too wide)	Check expansion valve.
	Compressor malfunction (Insufficient compression)	Check compressor.
Pressure low ("D" area of low side graph)	Insufficient refrigerant (Insufficient charge or leakage)	Check for leakage, repair if necessary and recharge.
	Expansion valve malfunction (valve opens too narrow)	Check expansion valve.
	Clogged refrigerant passage (crashed pipe)	Repair or replace.

THERMOMETER AT CENTER DUCT

Condition	Possible Cause	Correction
Outlet air temperature at center duct is high (Crossing point is in area "E")	Insufficient or excessive charge of refrigerant	Check refrigerant pressure.
	Dirty or bent A/C evaporator fins	Clean or repair.
	Air leakage from cooling (heater) unit or air duct	Repair or replace.
	Malfunctioning, switch over function of door in cooling (heater) unit	Repair or replace.
	Compressor malfunction	Check compressor.
Outlet air temperature at center duct is low (Crossing point is in area "F")	Insufficient air volume from center duct (Heater blower malfunction)	Check blower motor and fan.
	Compressor malfunction	Check compressor.

DETAILED DIAGNOSIS TABLE (AMBIENT TEMPERATURE AT 30°C (86°F))

Condition			Possible Cause	Correction
Manifold Gauge	MPa (kg/cm^2) (psi)	Detail		
Lo	Hi			
0.23 – 0.35 (2.3 – 3.5) (33 – 50)	**1.4 – 1.75 (14 – 17.5) (200 – 249)**	**Normal condition**	–	–
Negative pressure	**0.5 – 0.6 (5 – 6) (71.2 – 85.3)**	**The low pressure side reads a negative pressure, and the high pressure side reads an extremely low pressure. Presence of frost around tubing to and from receiver / dryer and expansion valve.**	Dust particles or water droplets are either stuck or frozen inside expansion valve, preventing the refrigerant from flowing	Clean expansion valve. Replace it if it cannot be cleaned. Replace receiver / dryer. Evacuate the A/C system and recharge with fresh refrigerant.
Normal : 0.23 – 0.35 (2.3 – 3.5) (33 – 50) ↑↓ Abnormal : Negative pressure	**Normal : 1.4 – 1.75 (14 – 17.5) (200 – 249) ↑↓ Abnormal : 0.7 – 1.0 (7 – 10) (100 – 142)**	**During A/C operation, the low pressure side sometimes indicates negative pressure, and sometimes normal pressure. Also high pressure side reading fluctuates between the abnormal and normal pressure.**	Expansion valve is frozen due to moisture in the system, and temporarily shuts off the refrigeration cycle	Replace expansion valve. Replace receiver / dryer. Evacuate A/C system and recharge with fresh refrigerant.
0.05 – 0.15 (0.5 – 1.5) (4.2 – 21.3)	**0.7 – 1.0 (7 – 10) (100 – 142)**	**Both low and high pressure sides indicate low readings. Continuous air bubbles are visible through sight glass. Output air is slightly cold.**	Insufficient refrigerant in system (Refrigerant leaking)	Using leak detector, check for leaks and repair as necessary. Recharge refrigerant to a specified amount. If the pressure reading is almost 0 when the manifold gauges are attached, check for any leaks, repair them, and evacuate the system.
0.4 – 0.6 (4 – 6) (56.9 – 85.3)		**Pressure on low pressure side is high. Pressure on high pressure side is low. Both pressure becoming equal right after A/C is turned OFF.**	Internal leak in compressor	Inspect compressor and repair or replace as necessary.

Condition			Possible Cause	Correction
Manifold Gauge	MPa (kg/cm^2) (psi)	Detail		
Lo	Hi			
0.35 – 0.45 (3.5 – 4.5) (50 – 64)	**2.0 – 2.5 (20 – 25) (285 – 355)**	**High pressure reading on both low and high pressure sides. Air bubbles are not visible even when engine rpm is lowered.**	Overcharged A/C system Faulty condenser cooling operation Faulty condenser cooling fan operation	Adjust refrigerant to specified amount. Clean condenser. Inspect and repair condenser cooling fan.
		High pressure reading on both low and high pressure sides. Low pressure side tubing is not cold when touched. Air bubbles are visible through sight glass.	Presence of air in A/C system (Improperly evacuated)	Replace receiver / dryer. Inspect quantity of compressor oil and presence of contaminants in oil. Evacuate system and recharge with fresh refrigerant.
0.45 – 0.55 (4.5 – 5.5) (64 – 78)		**High pressure reading on both low and high pressure sides. Large amount of frost or dew on the low pressure side tubing.**	Faulty expansion valve Refrigerant flow is not regulated properly	Replace expansion valve.

A/C System Inspection of ECM

ECM and circuits can be checked at ECM wiring couplers by measuring voltage.

CAUTION:

ECM cannot be checked by itself. It is strictly prohibited to connect voltmeter or ohmmeter to ECM with couplers disconnected from it.

Voltage check

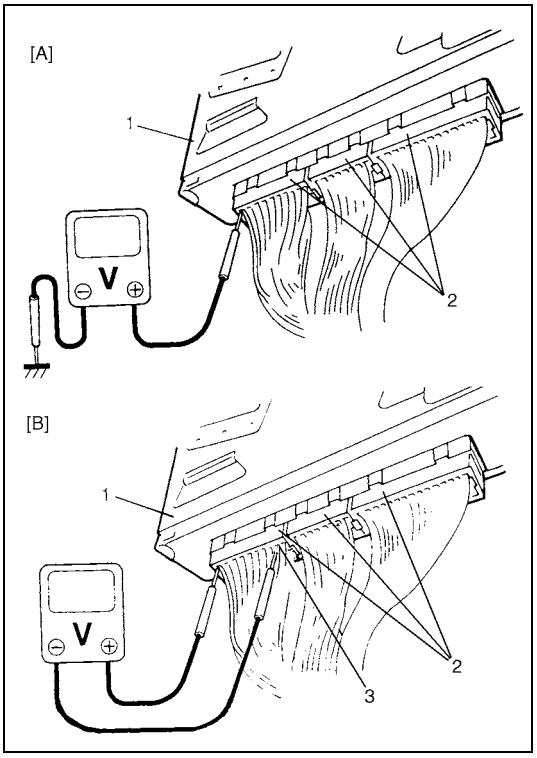

1) Remove ECM (1) from vehicle.
2) Connect ECM couplers (2) to ECM.
3) Check voltage at each terminal of couplers connected. Refer to “Fuel injector on-vehicle inspection” in Section 6E.

NOTE:

As each terminal voltage is affected by the battery voltage, confirm that it is 11 V or more when ignition switch is ON position.

[A]:	Fig. A
[B]:	Fig. B
3.	C64-2

Terminal arrangement of ECM coupler (viewed from harness side)

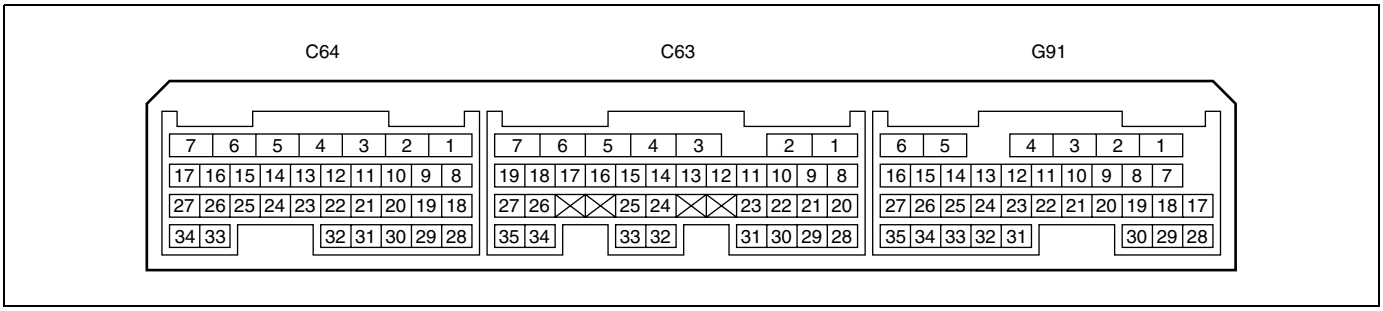

ECM voltage values table for relation of A/C control

Terminal	Wire	Circuit	Measurement Ground	Normal Value	Condition
C63-16	LT GRE	Engine coolant temperature sensor input	Ground to engine (Fig B)	3.7 – 3.85 V	Ignition switch ON, ECT at 0 °C (32 °F)
				1.45 – 1.6 V	Ignition switch ON, ECT at 50 °C (122 °F)
				0.4 – 0.5 V	Ignition switch ON, ECT at 100 °C (212 °F)
C63-28	ORN	Sensor ground	Ground to engine (Fig B)	–0.5 – 0 V	Ignition switch ON
C64-2	BLK	ECM ground for sensor circuit	Ground to body (Fig A)	–0.5 – 0 V	Ignition switch ON
C64-5	GRN/YEL	Condenser cooling fan relay No.2 output	Ground to engine (Fig B)	0 – 1 V	Ignition switch ON, Engine coolant temperature more than 110 °C (230 °F) or A/C request signal low input
				10 – 14 V	Ignition switch ON, Engine coolant temperature under 113 °C (235 °F) or A/C request signal high input
C64-11	PNK/BLK	Magnet clutch relay output	Ground to engine (Fig B)	0 – 1 V	Engine running, A/C request signal low input and engine coolant temperature less than 110 °C (230 °F)
				10 – 14 V	Engine running, A/C request signal high input and engine coolant temperature more than 113 °C (235 °F)
C64-12	PNK	Condenser cooling fan relay No.1 output	Ground to engine (Fig B)	0 – 1 V	Ignition switch ON, Engine coolant temperature more than 110 °C (230 °F) or A/C request signal low input
				10 – 14 V	Ignition switch ON, Engine coolant temperature under 113 °C (235 °F) or A/C request signal high input
C64-15	BRN/WHT	Main relay	Ground to engine (Fig B)	0 – 1 V	Ignition switch ON
				10 – 14 V	Ignition switch OFF
G91-4	BRN	Radiator cooling fan relay output	Ground to engine (Fig B)	0 – 1 V	
				10 – 14 V	
G91-6	BLK/RED	Power supply for engine control	Ground to engine (Fig B)	10 – 14 V	Ignition switch ON
G91-13	YEL	Blower fan switch	Ground to engine (Fig B)	0 – 2 V	Blower fan switch 2nd or 3rd or 4th position with ignition switch ON
				3 – 6 V	Blower fan switch 1st position with ignition switch ON
				10 – 14 V	Blower fan switch OFF position with ignition switch ON
G91-15	WHT/BLK	Evaporator thermistor temp. input	Ground to engine (Fig B)	1.9 – 2.3 V (1940 – 2060 Ω)	Evaporator thermistor temperature at approximately 25 °C (77 °F) with ignition switch ON
				3.3 – 3.8 V (6450 – 6850 Ω)	Evaporator thermistor temperature at approximately 0 °C (32 °F) with ignition switch ON

Terminal	Wire	Circuit	Measurement Ground	Normal Value	Condition
G91-30	YEL/GRN	A/C switch input	Ground to engine (Fig B)	0 – 1 V	Blower fan switch and A/C switch ON with ignition switch ON
				10 – 14 V	Blower fan switch and A/C switch OFF with ignition switch ON
G91-35	PNK/BLU	Blower fan speed input	Ground to engine (Fig B)	–0.5 – 0 V	Ignition switch ON

On-Vehicle Service

Operation Procedure for Refrigerant Charge

WARNING:

- **Your eyes should not be exposed to refrigerant (liquid).**
  Any liquid HFC-134a (R-134a) escaping by accident shows a temperature as low as approximately –6 °C (21 °F) below freezing point. Should liquid HFC-134a (R-134a) get into your eyes, it may cause a serious injury. To protect your eyes against such accident, it is necessary to always wear goggles. Should it occur that HFC-134a (R-134a) strikes your eyes, consult a doctor immediately.
  - **Do not use your hand to rub the affected eye(s). Instead, use quantities of fresh cold water to splash it over the affected area to gradually raise temperature of such area above freezing point.**
  - **Obtain proper treatment as soon as possible from a doctor or eye specialist.**
- **Should the HFC-134a (R-134a) liquid come into contact with your skin, the affected area should be treated in the same manner as when skin is frostbitten or frozen.**
- **Refrigerant must not be handled near where welding or steam cleaning is performed.**
- **Refrigerant should be kept at a cold and dark place. It should never be stored where a high temperature is anticipated, e.g. where exposed to direct sun light, close to fire or inside vehicle (including trunk room).**
- **Avoid breathing fumes produced when HFC-134a (R-134a) is burned. Such fumes may be hazardous to health.**

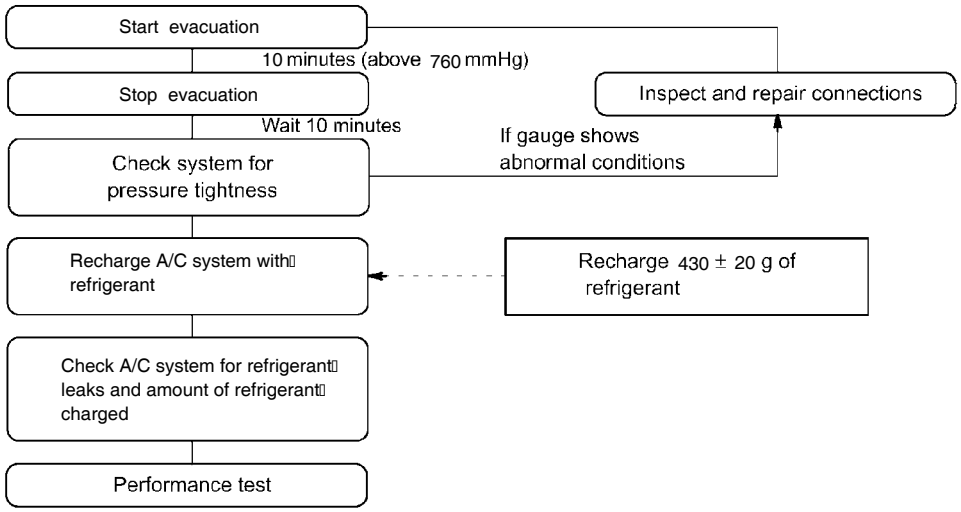
Start evacuation
10 minutes (above 760 mmHg)
Stop evacuation
Inspect and repair connections
Wait 10 minutes
If gauge shows abnormal conditions
Check system for pressure tightness
Recharge A/C system with refrigerant
Recharge 430 ± 20 g of refrigerant
Check A/C system for refrigerant leaks and amount of refrigerant charged
Performance test

Recovery

REFRIGERANT RECOVERY

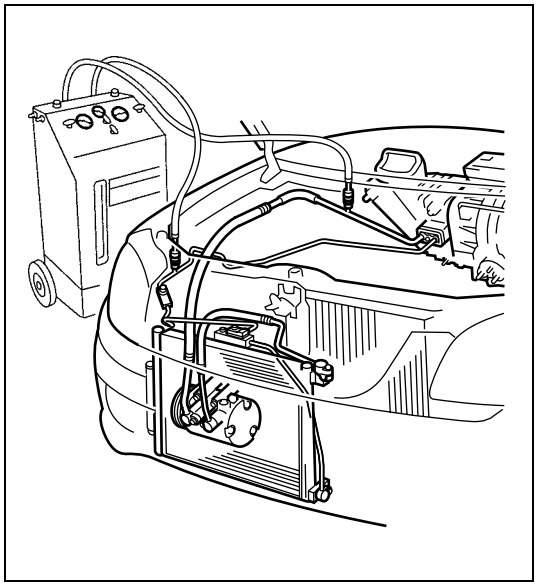

When discharging refrigerant out of A/C system, always recover it by using refrigerant recovery and recycling equipment because discharging refrigerant HFC-134a (R-134a) into atmosphere would cause adverse effect to environments.

NOTE:

- **After recovering refrigerant from system, the amount of removed compressor oil must be measured for replenishing compressor oil.**
- **When handling recovery and recycling equipment, be sure to follow the instruction manual for the equipment.**

Replenishing compressor oil

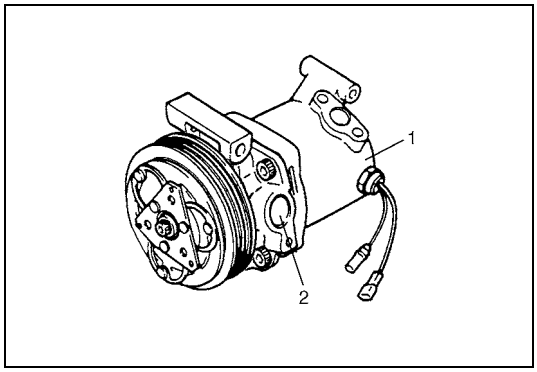

It is necessary to replenish specified amount of compressor oil to compressor (1) from compressor suction side hole (2) before evacuating and charging refrigerant.

WHEN CHARGING REFRIGERANT ONLY

When charging refrigerant without replacing any component part, replenish the same amount of measured oil when recovering refrigerant (if not measured, replenish 30 cc oil).

WHEN REPLACING COMPRESSOR

CAUTION:
Be sure to use P/N: 99000-99085-00A compressor oil or an equivalent compressor oil.

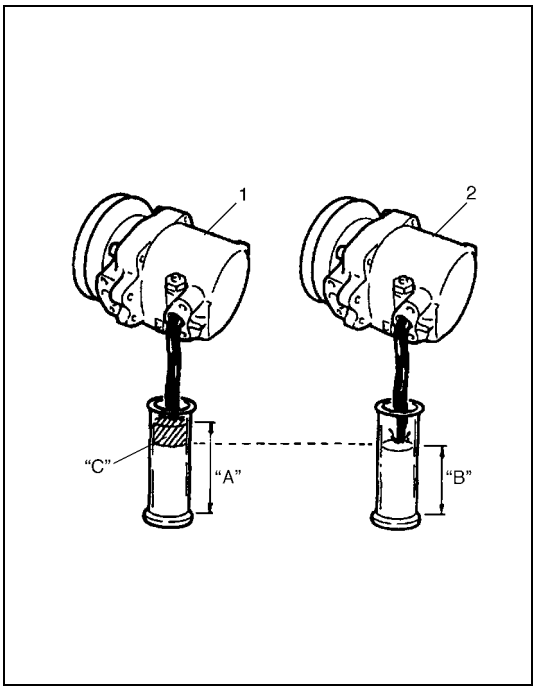

Compressor oil is sealed in each new compressor by the amount required for A/C system. Therefore, when using a new compressor for replacement, drain oil from it by the amount calculated as follows.

"C" = "A" – "B"
"C": Amount of oil to be drained
"A": Amount of oil sealed in a new compressor
"B": Amount of oil remaining in removed compressor

NOTE:
Compressor assembly supplied from factory is filled up with the following amount of oil.

Oil amount in compressor
90 ± 10 cm^3 (90 ± 10 cc, 5.49 ± 0.61 in^3)

1. New compressor
2. Removed compressor

When replacing other part

Replenish the following amount of oil to compressor.

Amount of compressor oil to be replenished

Replaced part	Amount of compressor oil
Evaporator	25 cm^3 (25 cc, 1.53 in^3)
Condenser	15 cm^3 (15 cc, 0.92 in^3)
Dryer	20 cm^3 (20 cc, 1.22 in^3)
Hoses	10 cm^3 (10 cc, 0.61 in^3) each
Pipes	10 cm^3 (10 cc, 0.61 in^3) each

Evacuation of A/C system

EVACUATING PROCEDURE

CAUTION:
Do not evacuate before recovering refrigerant in system.

NOTE:
Once air conditioning system circuit is opened (exposed) to atmospheric air, system must be evacuated by using a vacuum pump. The system should be attached with a manifold gauge set, and should be evacuated for approximately 15 minutes.

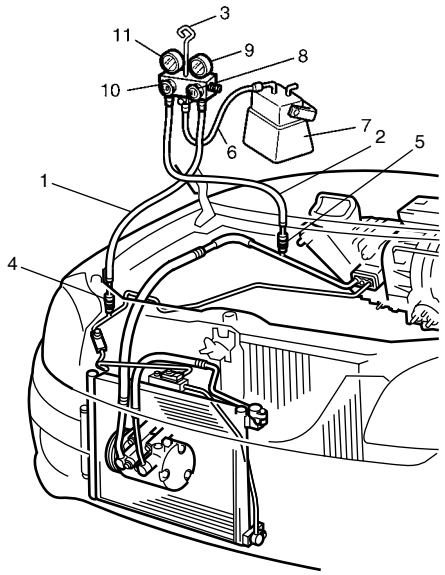

1) Connect high charging hose (1) and low charging hose (2) of manifold gauge set (3) respectively as follows:
   High charging hose (1) → High pressure charging valve (4) on condenser outlet pipe.
   Low charging hose (2) → Low pressure charging valve (5) on suction pipe.
2) Attach center charging hose (6) of manifold gauge set (3) to vacuum pump (7).
3) Operate vacuum pump (7), and then open discharge side valve (Hi) (8) of manifold gauge set (3).
   If there is no blockage in the system, there will be an indication on high pressure gauge (9).
   In this case, open the other side valve (Lo) (10) of the set and repair the system.
4) Approximately 10 minutes later, low pressure gauge (11) should show a vacuum lower than –760 mmHg providing no leakage exists.

NOTE:

- **If the system does not show a vacuum below –760 mmHg, close both valves, stop vacuum pump and watch movement of low pressure gauge.**
- **Increase in the gauge reading suggests existence of leakage. In this case, repair the system before continuing its evacuation.**
- **If the gauge shows a stable reading (suggesting no leakage), continue evacuation.**

5) Evacuation should be carried out for a total of at least 15 minutes.
6) Continue evacuation until low pressure gauge (11) indicates a vacuum less than –760 mmHg, and then close both valves (8), (10).
7) Stop vacuum pump (7). Disconnect center charging hose (6) from pump inlet. Now, the system is ready for charging refrigerant.

A/C system check for pressure leaks

After completing the evacuation, close manifold gauge high pressure valve and low pressure valve and wait 10 minutes. Verify that low pressure gauge reading has not changed.

CAUTION:

If the gauge reading moves closer to "0", there is a leak somewhere. Inspect the tubing connections, make necessary corrections, and evacuate system once again, making sure that there are no leaks.

Charge

CAUTION:

- **Always charge through low pressure side of A/C system at after the initial charging is performed from the high pressure side with the engine stopped.**
- **Never charge to high pressure side of A/C system with engine running.**
- **Do not charge while compressor is hot.**
- **When installing tap valve to refrigerant container to make a hole there through, carefully follow directions given by manufacturer.**
- **A pressure gauge should always be used before and during charging.**
- **The refrigerant container should be emptied of refrigerant when discarding it.**
- **The refrigerant container should not be heated up to 40 °C (104 °F) or over.**
- **Refrigerant container should not be reversed in direction during charging. Reversing in direction causes liquid refrigerant to enter compressor, causing troubles, such as compression of liquid refrigerant and the like.**

NOTE:

The air conditioning system contains HFC-134a (R-134a).
Described here is a method to charge the air conditioning system with refrigerant from the refrigerant service container. When charging refrigerant by using the refrigerant and recycling equipment (when recycling refrigerant), follow the procedure described in the equipment manufacturer's instruction manual.

CHARGING PROCEDURE

The initial charge of the A/C system is performed from the high pressure side with the engine stopped. And next, this method must be followed by charging from the low pressure side with the engine running.

1) Check if hoses are routed properly after evacuating the system.

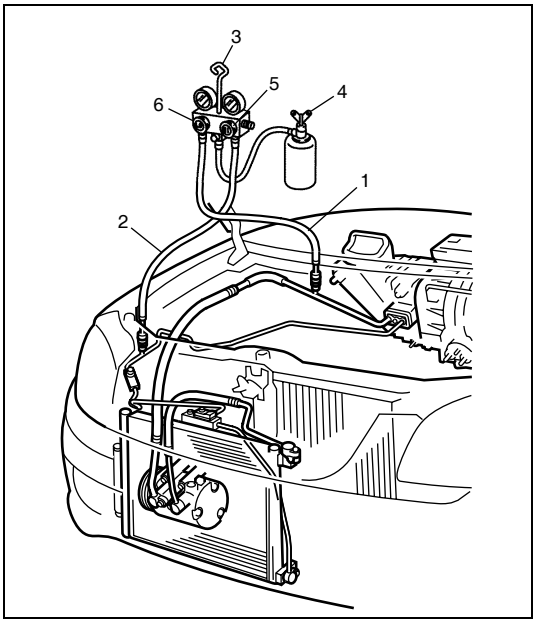

2) Connect low charging hose (1) and high charging hose (2) of the manifold gauge set (3) in position. Then, open refrigerant container valve (4) to purge the charging line.
3) Open the high pressure side valve (5) and charge refrigerant to system.
4) After a while, open the low pressure side valve (6) and close the high pressure side valve (5).

WARNING:
Make sure that high pressure side valve is closed securely.

5) Start engine and keep engine speed at 1500 r/min. Then, operate air conditioning.
6) Charge A/C system with refrigerant in vapor state. At this time, refrigerant container (4) should be held upright.

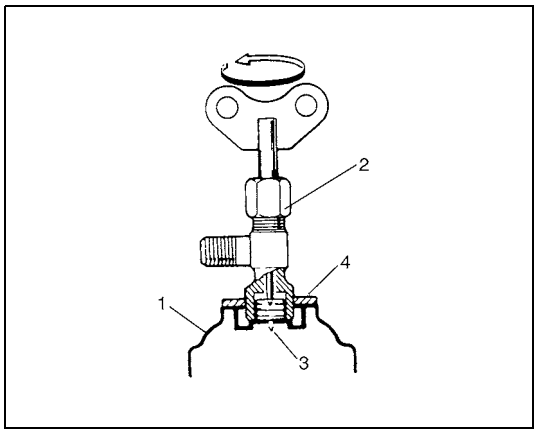

7) When refrigerant container (1) is emptied, use the following procedure to replace it with a new refrigerant container (1).
   a) Close low pressure valve.
   b) Replace empty container (1) with a refrigerant container which has been charged with refrigerant. When using refrigerant container tap valve (2), use the following procedure for replacement.
      i) Retract needle (3) and remove refrigerant container tap valve (2) by loosening its plate nut (4).
      ii) Install previously-removed refrigerant container tap valve (2) to a new refrigerant container (1).

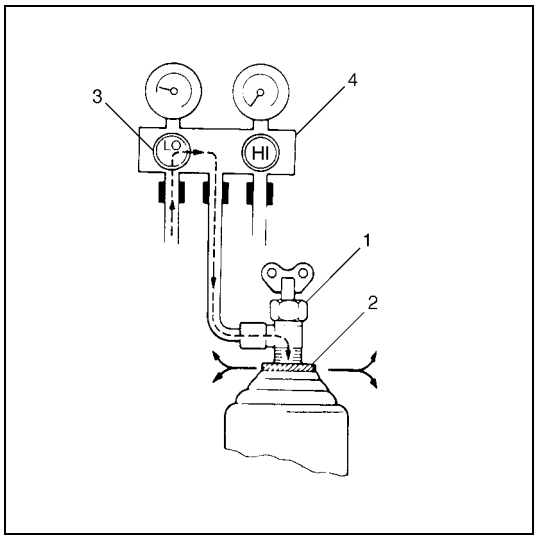

   c) Purge any air existing in center charging hose
      When using refrigerant container tap valve, use the following procedure to purge air.
      i) Once fully tighten refrigerant container tap valve (1), and then loosen (open) plate nut (2) slightly.
      ii) Open low pressure side valve (3) of manifold gauge set (4) a little.
      iii) As soon as refrigerant comes out with a “hiss” through a clearance between refrigerant container and tap valve, tighten plate nut (2) as well as low pressure side valve (3).
      iv) Turn handle of tap valve (1) clockwise so that its needle is screwed into the new container to make a hole for refrigerant flow.

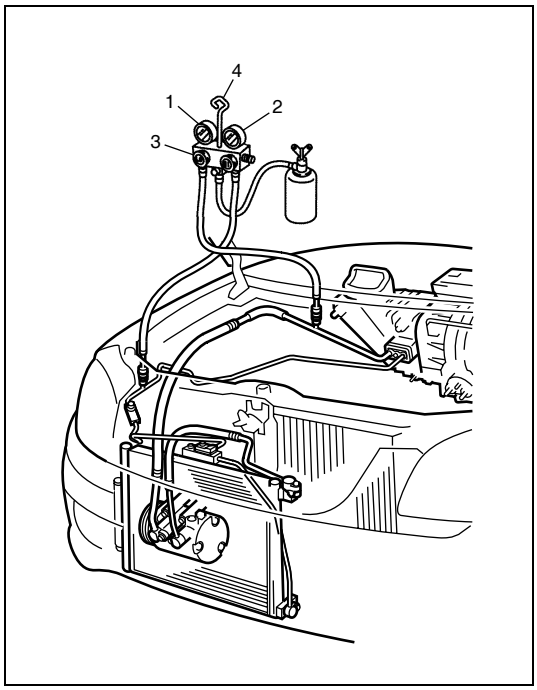

8) After the system has been charged with specified amount (430 ± 20 g) of refrigerant or when low pressure gauge (1) and high pressure gauge (2) have indicated the following specified value, close low pressure side valve (3) on manifold gauge set (4).

Low side and high side pressure example

Gauges should read as follows when ambient temperature is 30 °C (86 °F).	
Pressure on high pressure gauge	**1400 – 1750 kPa** **14.0 – 17.5 kg/cm^2** **199.1 – 248.9 psi**
Pressure on low pressure gauge	**230 – 350 kPa** **2.3 – 3.5 kg/cm^2** **32.7 – 49.8 psi**

Removing manifold gauge set

WARNING:
High pressure side is naturally under high pressure. So, care must be used to protect your eyes and skin.

When A/C system has been charged with a specified amount of refrigerant, remove manifold gauge set as follows:

1) Close low pressure side valve of manifold gauge set. (The high pressure side valve is closed continuously during the process of charging.)
2) Close refrigerant container valve.
3) Stop engine.
4) Using shop rag, remove charging hoses from service valves. This operation must be performed rapidly.
5) Put caps on service valves.

Leak test

Whenever a refrigerant leak is suspected in the system or any service operation has been performed which may result in disturbing lines or connections, it is advisable to test for leaks.
Common sense should be used in performing any refrigerant leak test, since the need and extent of any such test will, in general, depend upon the nature of a complaint and the type of a service performed on the system.

LIQUID LEAK DETECTORS

WARNING:
- **To prevent explosions or fires, make sure that there are no flammables in the vicinity.**
- **When exposed to fire, the refrigerant turns into a poisonous gas (phosgene). Do not inhale this gas.**

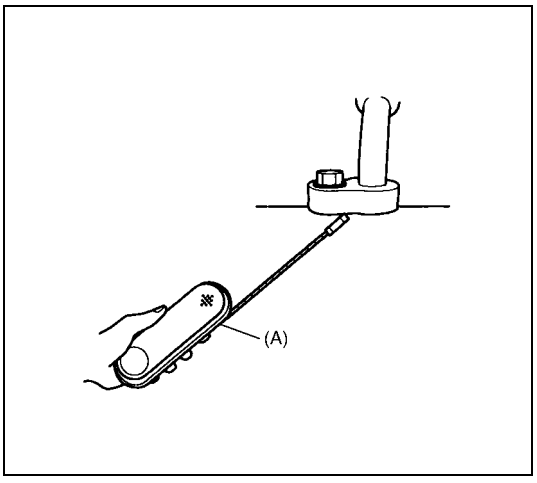

There are a number of fittings and places throughout the air conditioning system where a liquid leak detector solution may be used to pinpoint refrigerant leaks.
By merely applying the solution to the area in question with a swab, such as attached to the cap of a vial, bubbles will form within seconds if there is a leak.
For confined areas, such as sections of the evaporator and condenser, an electronic (refrigerant) leak detector is more practical for determining leaks.

Special tool
(A): 09990 - 86011

Precautions on Servicing A/C System

WARNING:

Should refrigerant HFC-134a (R-134a) strike your eye(s), consult a doctor immediately.

- **Do not use your hand to rub affected eye(s). Instead, use quantities of fresh cold water to splash it over affected area to thus gradually raise its temperature above the freezing point.**
- **Obtain proper treatment as soon as possible from a doctor or eye specialist. Should liquid refrigerant HFC-134a (R-134a) get on your skin, such affected part should be treated in the same manner as when skin is frostbitten or frozen.**

Refrigerant line

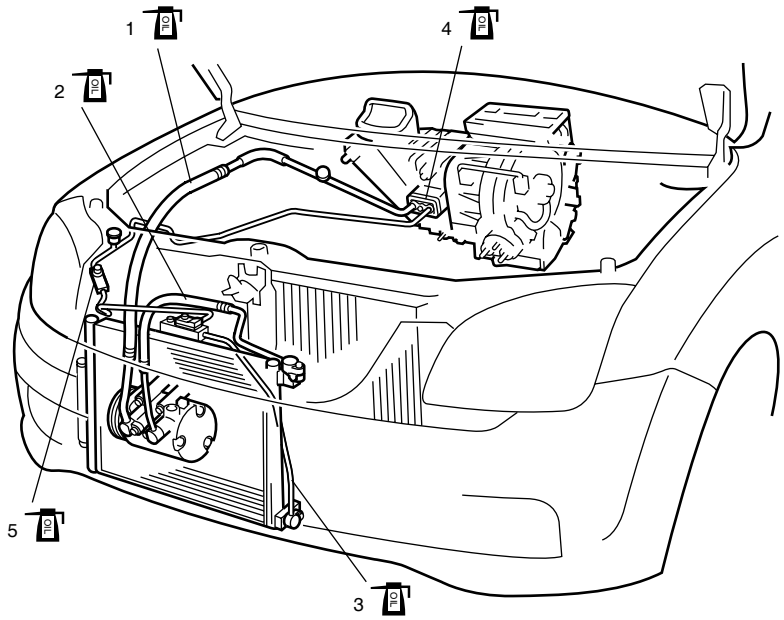

1. Suction hose: Apply compressor oil (refrigerant oil) to O-ring.	4. Expansion valve: Apply compressor oil (refrigerant oil) to O-ring.
2. Discharge hose: Apply compressor oil (refrigerant oil) to O-ring.	5. A/C refrigerant pressure switch: Apply compressor oil (refrigerant oil) to O-ring.
3. Condenser outlet pipe: Apply compressor oil (refrigerant oil) to O-ring.	

- Never use heat for bending pipes. When bending a pipe, try to make its bending angle as smooth as possible.
- Keep internal parts of air conditioning free from moisture and dirt. When disconnecting any line from system, install a blind plug or cap to the fitting immediately.
- When connecting hoses and pipes, apply a few drops of compressor oil (refrigerant oil) to seats of coupling nuts and O-ring.
- When tightening or loosening a fitting, use two wrenches, one for turning and the other for support.
- Route drain hose so that drained water does not make any contact to vehicle components.
- If pipes or hoses are replaced, replenish specified amount of compressor oil to compressor suction side by referring to “Replenishing compressor oil” under “Operation Procedure for Refrigerant Charge” in this section.
- Tighten flared nuts by the following specified torque.

Tightening torque
8 mm pipe: 13 N·m (1.3 kg-m, 9.5 lb-ft)
12 mm pipe: 23 N·m (2.3 kg-m, 16.6 lb-ft)
14.5 mm pipe: 33 N·m (3.3 kg-m, 23.8 lb-ft)

Handling refrigerant HFC-134a (R-134a)

- Always wear goggles to protect your eyes.
- Avoid you direct contact to liquid refrigerant.
- Do not heat refrigerant container higher than 40 °C (104 °F).
- Do not discharge refrigerant into atmosphere.
- Do not allow liquid refrigerant to touch bright metals. Refrigerant combined with moisture is corrosive and will tarnish surfaces of bright metals including chrome.

Refrigerant recovery

When discharging refrigerant out of A/C system, always recover it by using refrigerant recovery and recycling equipment. Discharging refrigerant HFC-134a (R-134a) into atmosphere would cause adverse effect to environments.

Refrigerant charge

After perform replenishing compressor oil and evacuating, charge a proper amount of refrigerant to A/C system referring to “Charge” under “Operation Procedure for Refrigerant Charge” in this section.

CAUTION:
Do not perform an additional refrigerant charging to A/C system. This cause it to overcharge.

Condenser Assembly On-Vehicle Inspection

Check the following.

- Clog of condenser fins.
  If, any clogs are found, condenser fins should be washed with water, and should be dried with compressed air.
- Condenser fins for leakage and breakage.
  If any defects are found, repair or replace condenser.
- Condenser fittings for leakage.
  If any defects are found, repair or replace condenser.

Condenser Assembly Removal and Installation

CAUTION:
Be careful not to damage condenser fins. If condenser fin is bent, straighten it by using flat head screwdriver or pair of pliers.

REMOVAL

1) Disconnect negative (–) cable at battery.
2) Recover refrigerant from A/C system by referring to “Recovery” under “Operation Procedure for Refrigerant Charge” in this section.

NOTE:

The amount of removed compressor oil must be measured for replenishing compressor oil.

3) Remove front bumper referring to “Front Bumper and Rear Bumper Removal and Installation” in Section 9.

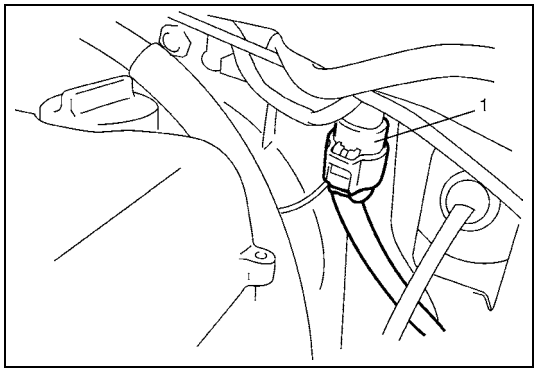

4) Disconnect condenser cooling fan motor coupler (1).

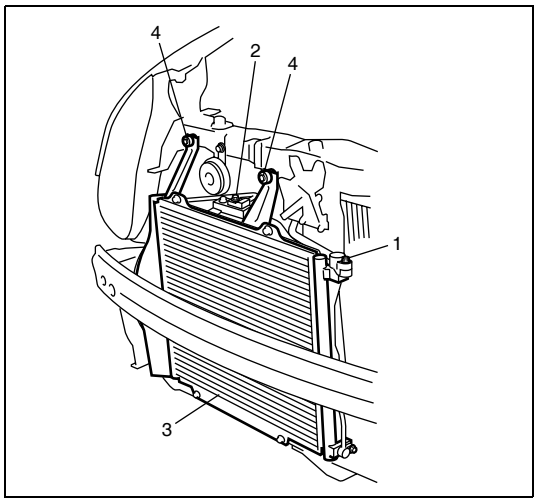

5) Disconnect discharge hose (1) and liquid pipe (2) from condenser assembly (3).
6) Remove condenser assembly mounting bolts (4).
7) Remove condenser assembly (3).

INSTALLATION

Reverse removal procedure to install condenser noting the following instructions.

- Replenish specified amount of compressor oil to compressor suction side by referring to “Replenishing compressor oil” under “Operation Procedure for Refrigerant Charge” in this section.
- Evacuate and charge refrigerant by referring to “Evacuation of A/C system” and “Charge” under “Operation Procedure for Refrigerant Charge” in this section.

Receiver / Dryer Removal and Installation

REMOVAL

1) Remove condenser assembly referring to “Condenser Assembly Removal and Installation” in this section.

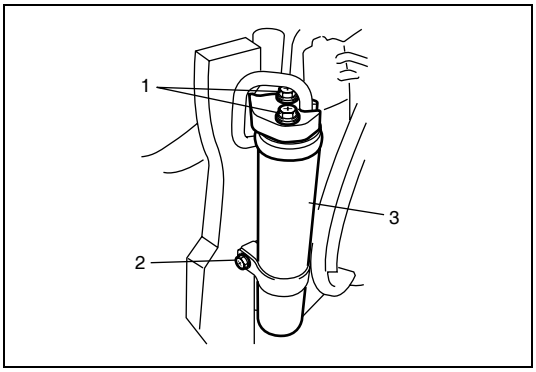

2) Loosen receiver / dryer attachment bolts (1), (2).
3) Remove receiver / dryer (3).

INSTALLATION

Reverse removal procedure to install receiver / dryer noting the following instructions.

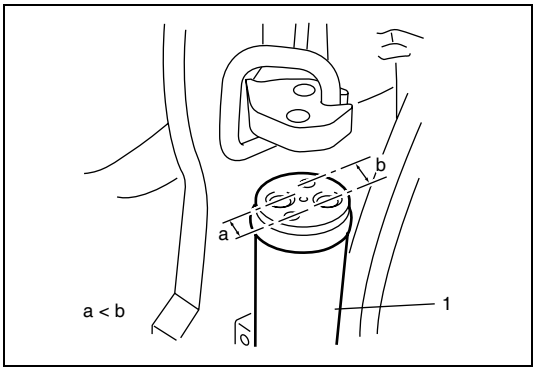

- Replenish specified amount of compressor oil to compressor suction side by referring to “Replenishing compressor oil” under “Operation Procedure for Refrigerant Charge” in this section.
- Be sure to install receiver / dryer (1) to proper direction as shown.
- Evacuate and charge refrigerant by referring to “Evacuation of A/C system” and “Charge” under “Operation Procedure for Refrigerant Charge” in this section.

Condenser Cooling Fan Motor On-Vehicle Inspection

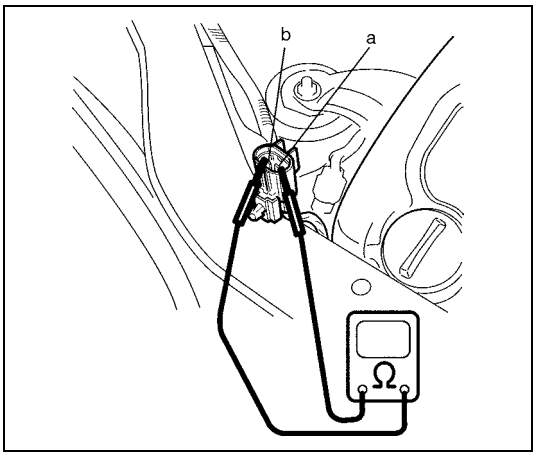

1) Check condenser cooling fan motor for continuity between terminal “a” and “b” as shown.
   If there is no continuity, replace condenser cooling fan motor.

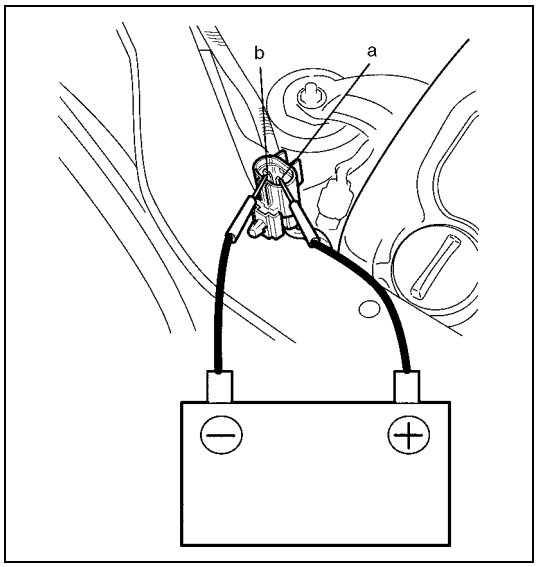

2) Connect battery to condenser cooling fan motor terminal “a” and “b” as shown in figure, then check that the condenser cooling fan motor operates smoothly.

Reference:
Condenser cooling fan specified current at 12 V 8 A maximum.

3) Check condenser cooling fan blade for damage. If any malfunction is found replace condenser cooling fan.

Condenser Cooling Fan Assembly Removal and Installation

REMOVAL

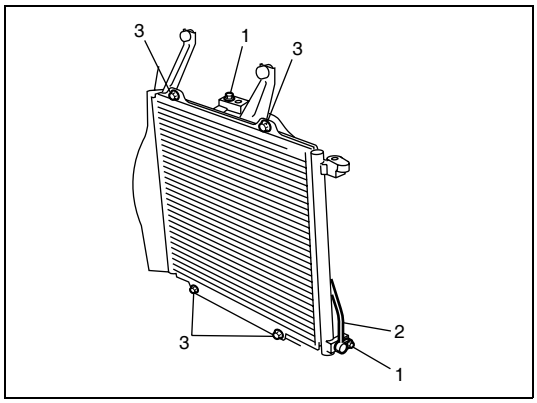

1) Remove condenser assembly referring to “Condenser Assembly Removal and Installation” in this section.
2) Remove condenser outlet pipe mounting bolts (1) and condenser outlet pipe (2).
3) Remove condenser cooling fan assembly mounting bolts (3).
4) Remove condenser cooling fan assembly from condenser.

INSTALLATION

Reverse removal procedure to install condenser cooling fan motor nothing the following instructions.

- Replenish specified amount of compressor oil to compressor suction side by referring to “Replenishing compressor oil” under “Operation Procedure for Refrigerant Charge” in this section.
- Evacuate and charge refrigerant by referring to “Evacuation of A/C system” and “Charge” under “Operation Procedure for Refrigerant Charge” in this section.

Cooling Unit (Evaporator) Components

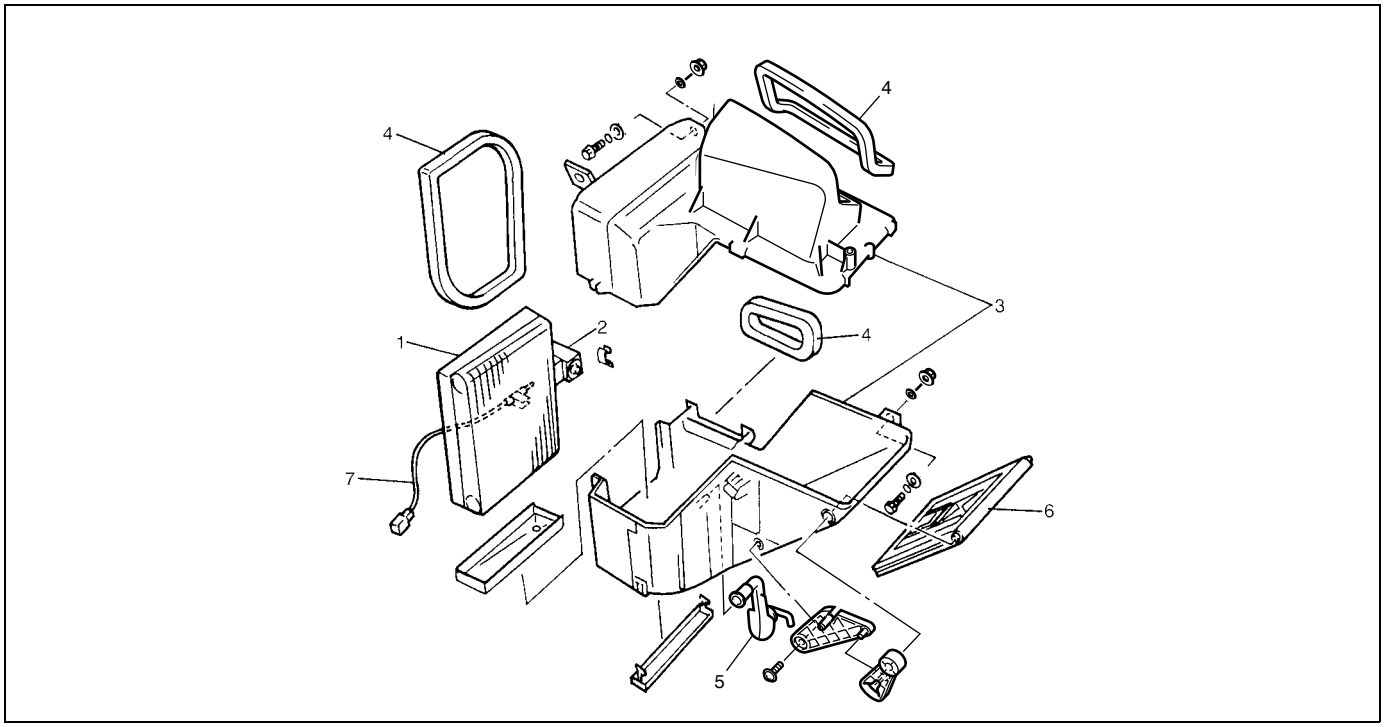

1. Evaporator	3. Evaporator case	5. Drain hose	7. Evaporator temperature sensor
2. Expansion valve	4. Packing	6. Air inlet door	

Cooling Unit (Evaporator) Removal and Installation

REMOVAL

1) Disconnect negative (–) cable at battery.
2) If equipped with air bag system, disable air bag system referring to “Disabling air bag system” in Section 10B.
3) Recover refrigerant from refrigeration system by using recovery and recycling equipment referring to “Operation Procedure for Refrigerant Charge” in this section.
4) Remove heater control cable, main harness clamp.
5) Loosen suction hose & liquid pipe bolt (4).
6) Loosen cooling unit bolt (1), nut (2) and screw (3) as shown in figure.
7) Remove cooling unit (5).

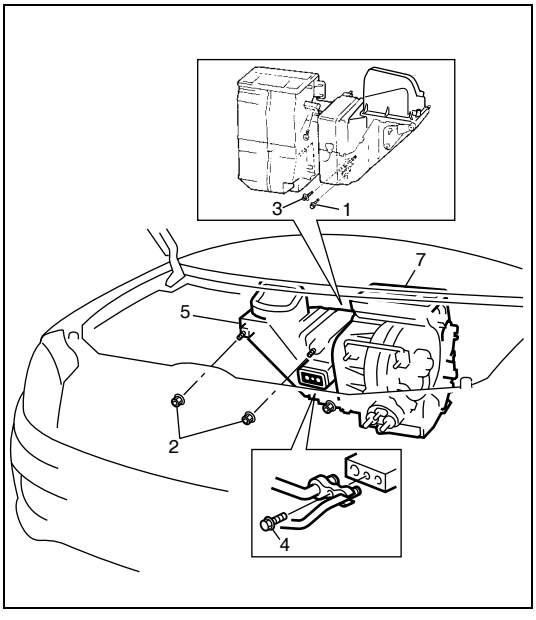

INSTALLATION

Reverse removal sequence to install cooling unit, noting the following points.

- If cooling unit or evaporator is replaced, pour 25 cc of refrigerating oil to compressor suction-side.

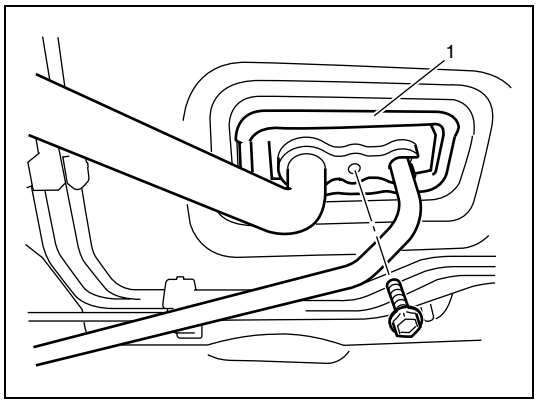

- Install uniformly the padding (1) to installation hole.
- Evacuate and charge system according to previously described procedure.
- Adjust heater control cable, referring to “Heater Control Lever Assembly Removal and Installation” in Section 1A.
- Enable air bag system, if equipped.

Cooling Unit (Evaporator) Inspection

- Clog of A/C evaporator fins
  If any clogs are found, A/C evaporator fins should be washed with water and should be dried with compressed air.
- A/C evaporator fins for leakage and breakage
  If any defects are found, repair or replace A/C evaporator.
- A/C evaporator fittings for leakage
  If any defects are found, repair or replace A/C evaporator.

Evaporator Thermistor (Evaporator Temperature Sensor) Removal and Installation

REMOVAL

1) Remove evaporator referring to “Cooling Unit (Evaporator) Removal and Installation” in this section.
2) Remove evaporator thermistor.

INSTALLATION

Reverse removal sequence to install cooling unit, noting the following points.

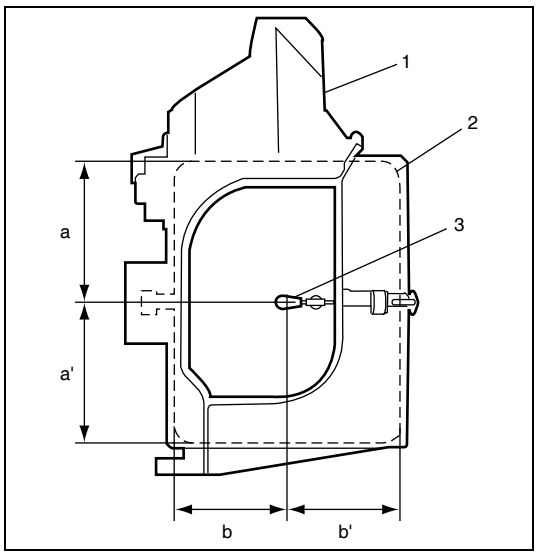

Install Evaporator thermistor (Evaporator temperature sensor) (3) to its original position. When its original position is not sure, install to the center of evaporator referring to figure.

1.	Cooling unit
2.	Evaporator
	a = a’
	b = b’

Evaporator Thermistor (Evaporator Temperature Sensor) Inspection

Check resistance between terminals for evaporator thermistor (1). If check results are as not specified, replace evaporator thermistor.

Evaporator thermistor resistance

Sensor Temperature (°C(°F))	Resistance (kΩ)
0 (32)	6.5 – 6.8
25 (77)	1.9 – 2.1

NOTE:

When the evaporator thermistor removed, its should be reinstalled in original position.

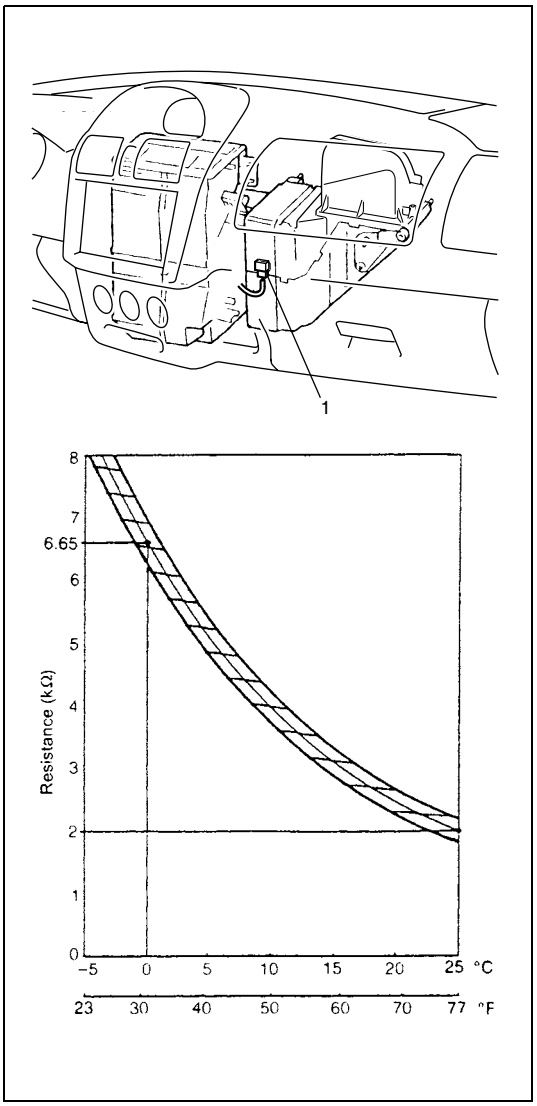

Expansion Valve Inspection

Refer to “A/C System Performance Inspection” earlier in this section.

Expansion Valve Removal and Installation

REMOVAL

1) Recover refrigerant from refrigeration system by using recovery and recycling equipment referring to “Operation Procedure for Refrigerant Charge” in this section.

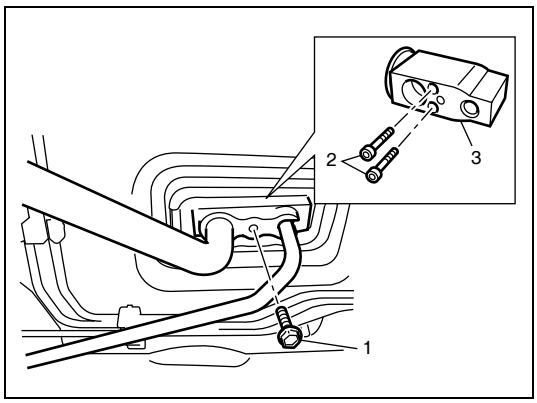

2) Loosen liquid pipe mounting bolt (1).
3) Loosen expansion attaching bolt (2) and remove expansion valve (3).

INSTALLATION

Reverse removal procedure for installation, noting the following points.

- Apply compressor oil to expansion valve O-ring and connecting hose and pipe O-ring.
- Evacuate and charge system according to previously described procedure.

Dual Pressure Switch Inspection

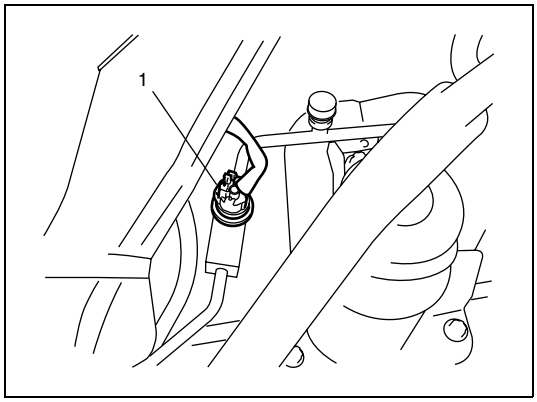

1) Check dual pressure switch (1) for continuity at normal temperature (approx. 25 °C (77 °F)) when A/C system has a proper charge of refrigerant and A/C system (compressor) is under operation. In each of these cases, switch should show proper continuity.

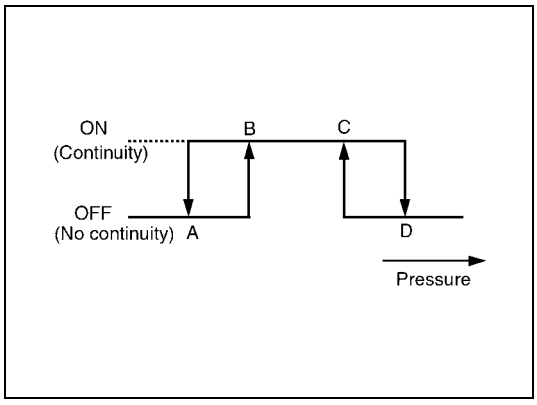

2) Check continuity between high and low pressure switch terminals at specified pressure as shown.

High and low pressure switch specification
A: Approximately 200 KPa (2.0 kg/cm^2, 28.5 psi)
B: Approximately 230 KPa (2.3 kg/cm^2, 32.5 psi)
C: Approximately 2600 KPa (26 kg/cm^2, 370 psi)
D: Approximately 3200 KPa (32 kg/cm^2, 455 psi)

Dual Pressure Switch Removal and Installation

REMOVAL

1) Recover refrigerant from refrigeration system by using recovery and recycling equipment referring to “Operation Procedure for Refrigerant Charge” in this section.
2) Disconnect negative (–) cable at battery.
3) Remove dual pressure switch.

INSTALLATION

Reverse removal procedure for installation, noting the following points.

- Apply compressor oil to dual pressure switch O-ring.
- Evacuate and charge system according to previously described procedure.

Tightening torque
Pressure sensor: 11 N·m (1.1 kg-m, 8.0 lb-ft)

A/C Switch Inspection

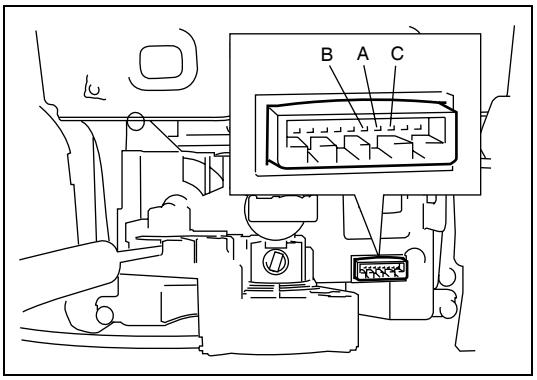

Check for continuity between terminals at each switch position by referring to the table below.
If continuity is not indicated as specified below, replace.

TERMINAL / POSITION	A	B	C
OFF [a]			
ON [b]			

[a]: Switch button released
[b]: Switch button kept in push

Condenser Cooling Fan Relay (No.1 and No.2) Inspection

1) Disconnect negative cable at battery.

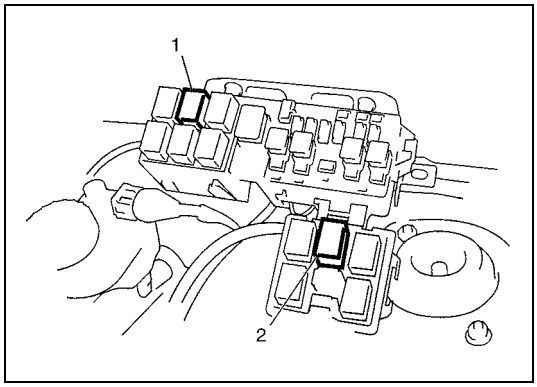

2) Remove condenser cooling fan relay No.1 (1) and No.2 (2) from relay box.

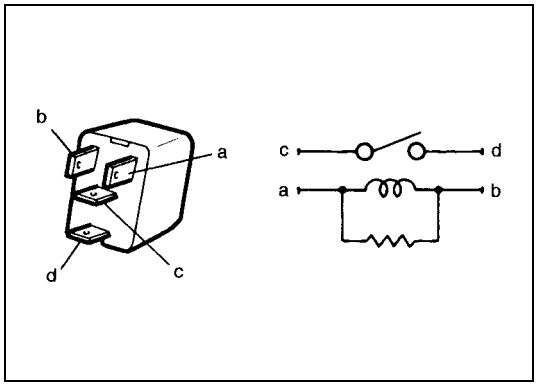

3) Check condenser cooling fan relay No.1.
   a) Check that there is no continuity between terminal “c” and “d”.
      If there is continuity, replace relay.
   b) Connect battery positive (+) terminal to terminal “b” of relay.
      Connect battery negative (–) terminal “a” of relay.
      Check continuity between terminal “c” and “d”.
      If there is no continuity when relay is connected to the battery, replace relay.

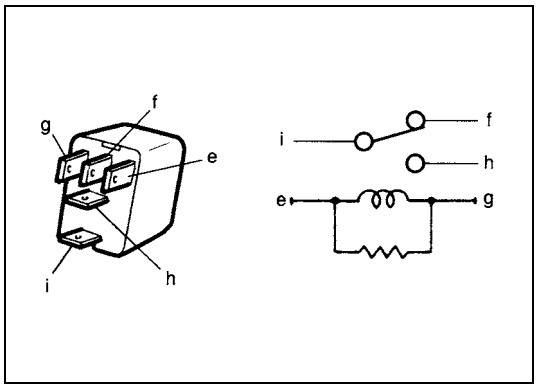

4) Check condenser cooling fan relay No.2.
   a) Check that there is continuity between terminal “i” and “f”.
      If there is no continuity, replace relay.
   b) Check that there is no continuity between terminal “i” and “h”.
      If there is continuity, replace relay.
   c) Connect battery positive (+) terminal to terminal “e” of relay.
      Connect battery negative (–) terminal “g” of relay.
      Check if there is no continuity between terminal “i” and “f”.
      If there is continuity when relay is connected to the battery, replace relay.
      Check if there is continuity between terminal “i” and “h”.
      If there is no continuity when relay is connected to the battery, replace relay.

Compressor Relay Inspection

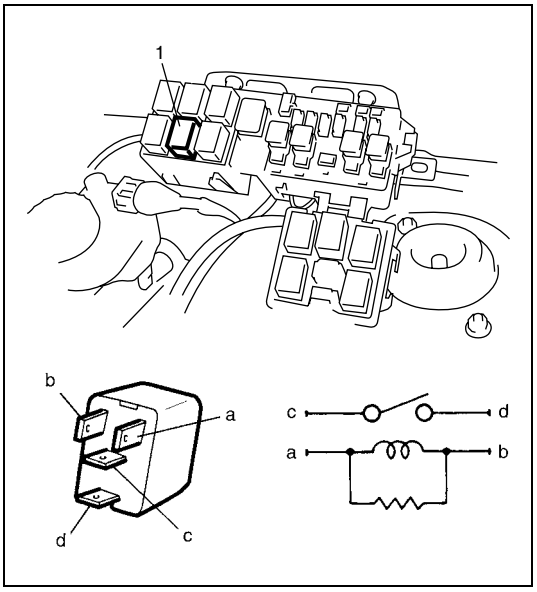

1) Disconnect negative (–) cable at battery.
2) Remove compressor relay (1) from main fuse box.
3) Check that there is no continuity between terminal “c” and “d”. If there is continuity, replace relay.
4) Connect battery positive (+) terminal to terminal “b” of relay.
   Connect battery negative (–) terminal “a” of relay.
   Check for continuity between terminal “c” and “d”.
   If there is no continuity when relay is connected to the battery, replace relay.

Compressor Assembly Removal and Installation

REMOVAL

1) Run engine at idle speed with air conditioning ON for 10 minutes. After that stop the engine.
2) Disconnect negative (–) cable at battery.
3) Remove front bumper by referring to “Front Bumper and Rear Bumper Removal and Installation” in Section 9.
4) Remove condenser assembly referring to “Condenser Assembly Removal and Installation” in this section.

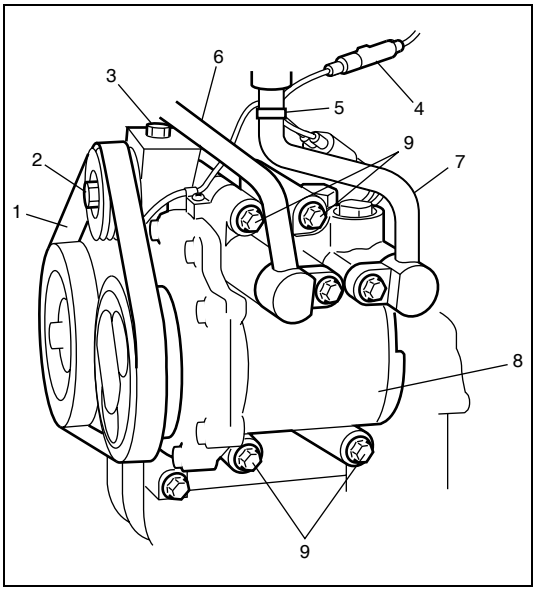

5) Remove compressor drive belt (1) by loosening tension pulley nut (2) and adjusting bolt (3).
6) Disconnect magnet clutch lead wire coupler (4).
7) Remove magnet clutch lead clamp (5).
8) Disconnect suction pipe (6) and discharge hose (7) from compressor (8).

NOTE:

Cap open fittings immediately to keep moisture out of system.

9) Remove compressor mounting bolts (9), and then remove compressor (8) from its bracket.

INSTALLATION

Reverse removal procedure to install compressor noting the following instructions.

- If compressor is replaced, pour new compressor oil by referring to “Replenishing compressor oil” under “Operation Procedure for Refrigerant Charge” in this section.
- Evacuate and charge system by referring to “Recovery” under “Operation Procedure for Refrigerant Charge” in this section.
- Adjust drive belt tension by referring to “Compressor Drive Belt Inspection and Adjustment” in this section.

Compressor Drive Belt Inspection and Adjustment

INSPECTION

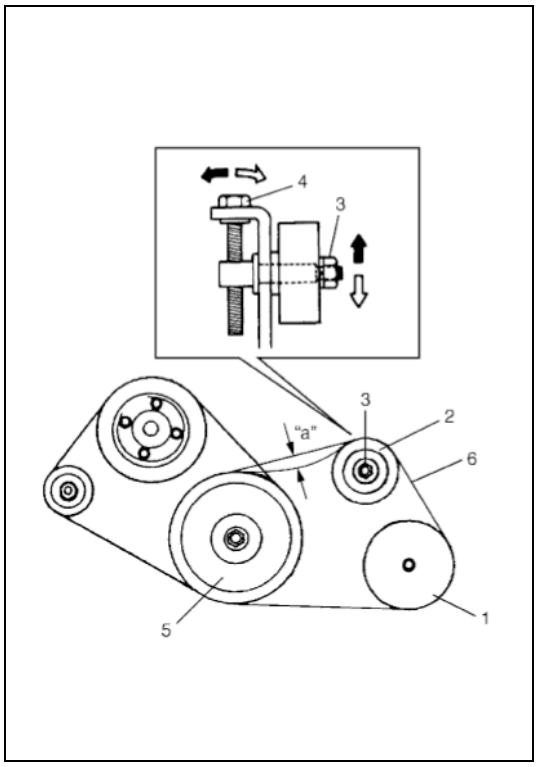

- Check compressor drive belt (6) for wear and cracks, and replace as required.
- Check compressor drive belt (6) tension by measuring how much it deflects when pushed at intermediate point between tension pulley (2) and crank pulley (5) with about 100 N (10 kg) force after crankshaft pulley 1 rotating.
  If belt tension is without specification, adjust belt tension referring to procedures below.

Compressor drive belt tension
“a”: 3 – 5 mm (0.12 – 0.20 in.)
New compressor drive belt tension
“a”: 2 – 4 mm (0.08 – 0.16 in.)

ADJUSTMENT

1) Loosen tension pulley nut (3).
2) Adjust belt tension by tighten or loosen tension pulley adjusting bolt (4).
3) Tighten tension pulley nut (3).
4) Turn the crank pulley (5) 1 revolution, then check belt tension.

Compressor Drive Belt Replacement

REPLACEMENT

1) Loosen tension pulley nut.
2) Loosen belt tension by loosen tension pulley adjusting bolt.
3) Remove compressor drive belt.
4) Install new compressor drive belt.
5) Adjust belt tension referring to above procedure.

Compressor Assembly Components

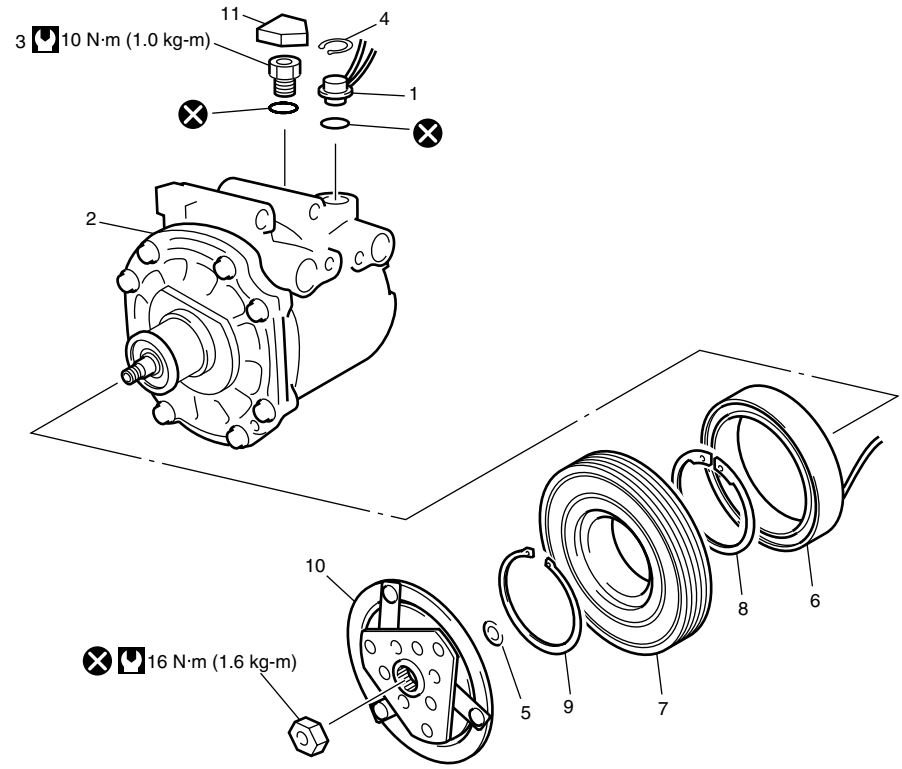

1. Thermal switch	5. Shim	9. Circlip	Tightening torque
2. Compressor	6. Magnet clutch coil	10. Armature	Do not use.
3. Relief valve	7. Magnet clutch pulley	11. Cap	
4. Circlip	8. Circlip		

Magnet Clutch Inspection

- Check armature plate and magnet clutch pulley for wear and oil soaked conditions respectively.
- Check magnet clutch pulley bearing for noise, wear and grease leakage.

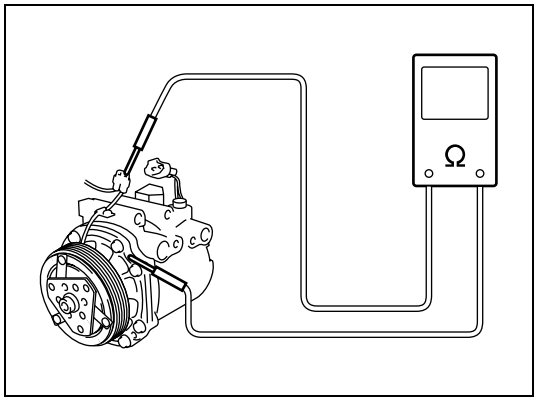

- Measure magnet clutch coil for resistance at 20 °C (68 °F).
  If the measured resistance does not remain within above tolerance, replace magnet clutch assembly.

Standard Resistance: 4.0 – 4.4 Ω

Magnet Clutch Removal and Installation

REMOVAL

1) Remove compressor from vehicle referring to “Compressor Assembly Removal and Installation” in this section.

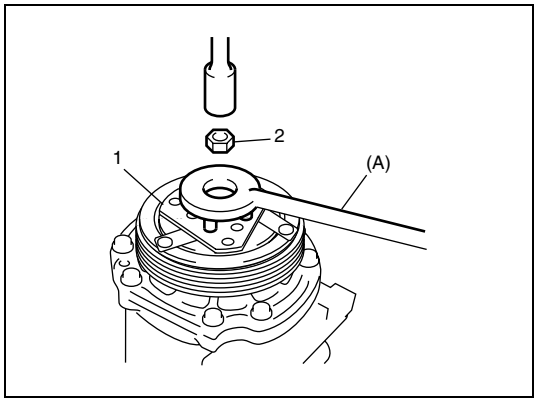

2) Fix armature plate (1) with special tool (A) and remove armature plate nut (2).
   Special tool
   (A): 09920–55810
3) Remove armature plate (1).

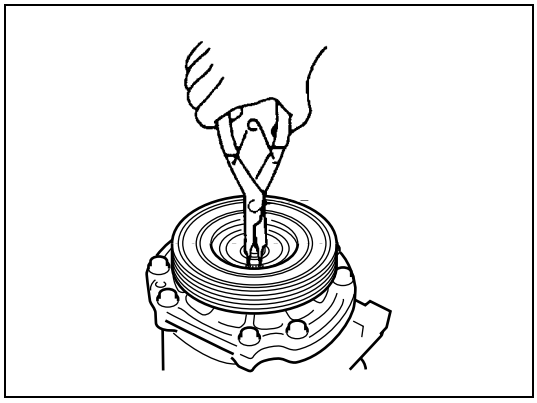

4) Remove shims from shaft.
5) Remove circlip.

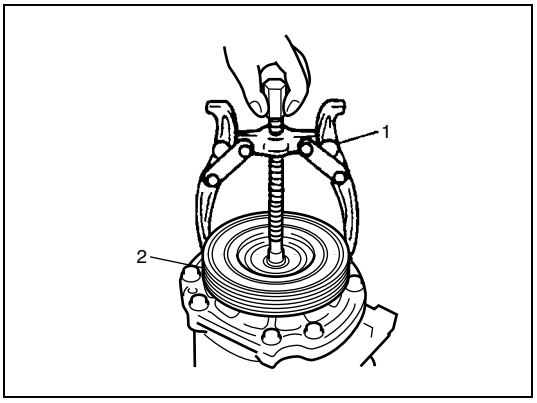

6) Remove magnet clutch pulley (2).

NOTE:

If it is difficult to remove magnet clutch pulley by hand, use puller (1).

CAUTION:

When using puller, turn the center bolt of puller by hand. Otherwise, magnet clutch pulley might be distorted.

7) Disconnect magnet clutch lead wire coupler and removal magnet clutch lead wire clamp.

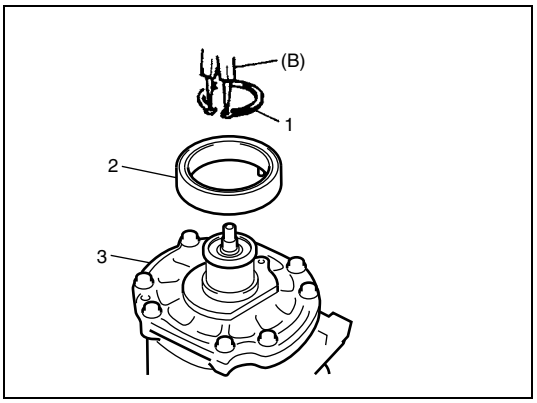

8) Remove circlip (1) by using special tool.

Special tool
(B):09900–06107

9) Remove magnet clutch coil (2) from compressor (3).

INSTALLATION

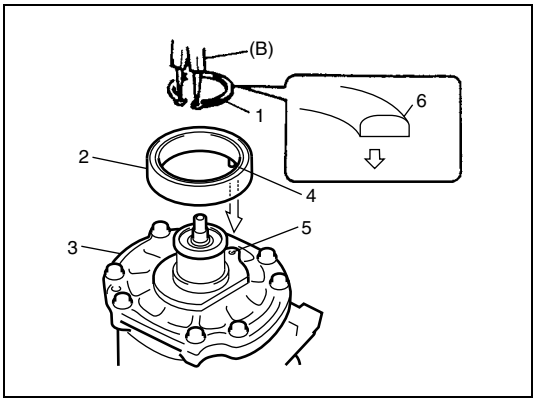

1) Install magnet clutch coil (2) fitting protrusion (4) of magnet clutch coil into hole (5) of compressor case (3).
2) Install circlip (1) directing chamfer side (6) upward.

Special tool
(B):09900–06107

3) Connect magnet clutch lead wire coupler and install magnet clutch lead wire clamp.

4) Install magnet clutch pulley (1) and circlip.

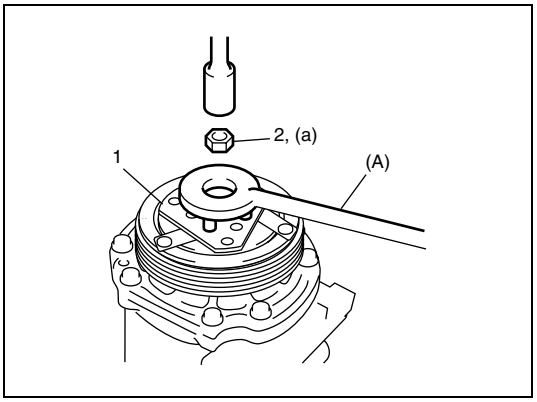

5) Tighten new armature plate nut (2) as specified below.

Tightening t que
Clutch plate nut (a): 16 N·m (1.6 kg-m, 11.5 lb-ft)

Special tool
(A): 09920-55810

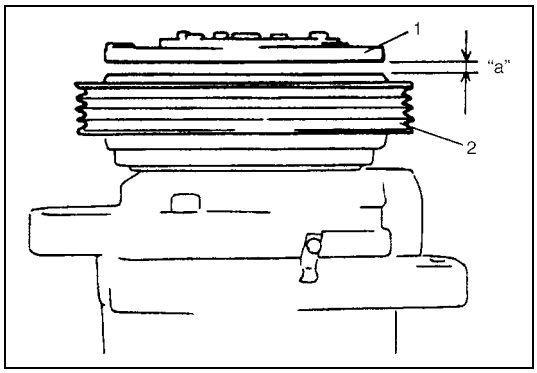

6) Check clearance between armature plate (1) and magnet clutch pulley (2).
   If the clearance comes off the standard clearance, adjust the clearance by putting shim(s) on compressor shaft.

Standard clearance "a": 0.25 – 0.5 mm (0.010 – 0.019 in)

Thermal Switch Inspection

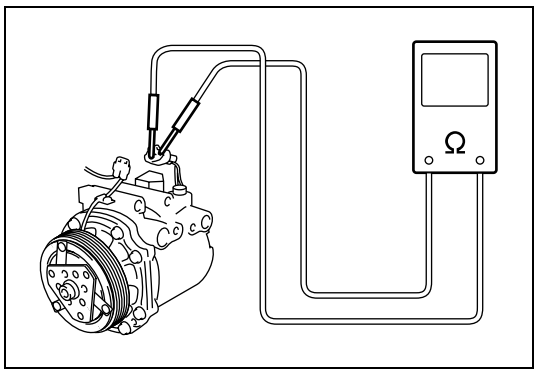

Measured thermal switch for resistance at 20 °C (68 °F)

Standard Resistance: 55 mΩ (DC 1.5 V, 100 mA)

Thermal Switch Removal and Installation

REMOVAL

1) Removal compressor from engine referring to "Compressor Assembly Removal and Installation" in this section.

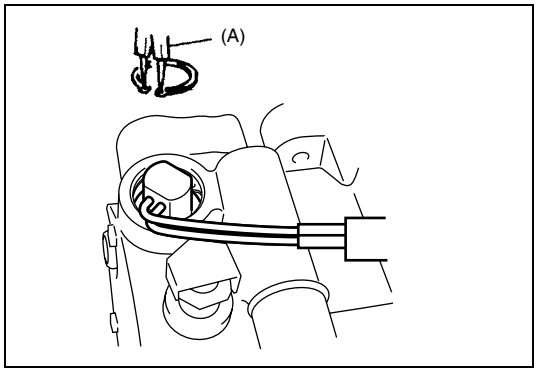

2) Removal circlip using special tool.

Special tool
(A): 09900–06107

3) Remove thermal switch and O-ring.

INSTALLATION

Reverse removal procedure noting the following point.

- Apply compressor oil to O-ring.
- Evacuate and charge system according to previously described procedure.

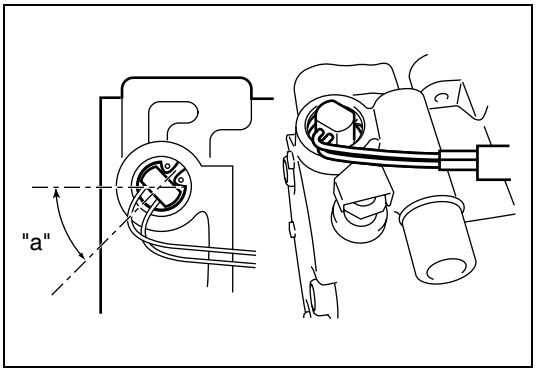

- Install thermal switch with aligning to angle “a” (approx. 45°) in the figure.

“a”: approx. 45°

Relief Valve Inspection

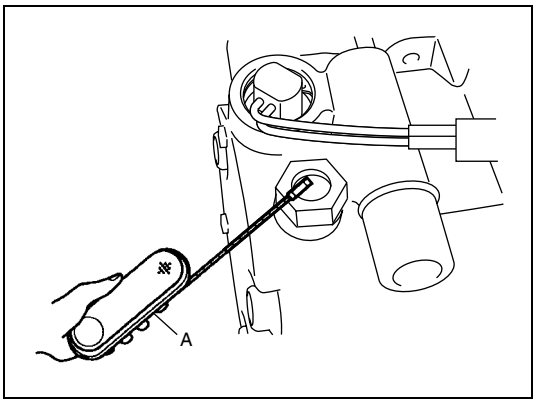

By using special tool, check if there is refrigerant leakage.
If there is refrigerant leakage, replace the relief valve.

Special tool
(A): 09990–86011

Relief valve Removal and Installation

REMOVAL

1) Removal compressor from vehicle. Referring to “Compressor Assembly Removal and Installation” in this section.
2) Remove cap, relief valve and O-ring.

INSTALLATION

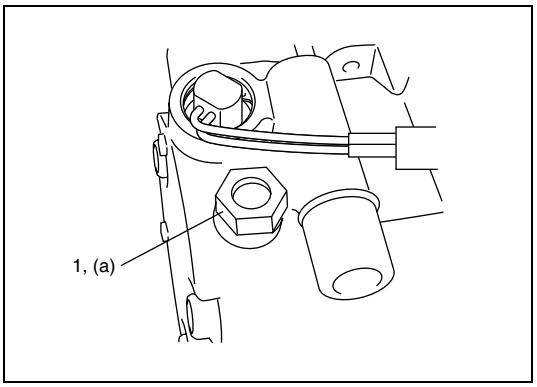

1) Install relief valve (1) and O-ring.

NOTE:

Apply compressor oil to relief valve O-ring.

Tightening torque
Relief valve (a): 10 N·m (1.0 kg-m, 7.2 lb-ft)

2) Install cap.
3) Install compressor to engine referring to “Compressor Assembly Removal and Installation” in this section.

Specifications

Tightening Torque Specifications

Fastening part		Tightening torque		
		N•m	kg-m	lb-ft
Refrigerant line	8 mm pipe	13	1.3	9.5
	12 mm pipe	23	2.3	16.6
	14.5 mm pipe	33	3.3	23.8
Magnet clutch plate		16	1.6	11.5
Relief valve		10	1.0	7.2

Special Tools and Equipment

Required Service Material

Material	Recommended SUZUKI product (Part Number)	Use
Compressor oil (refrigerant oil)	COMPRESSOR OIL P/No.: 99000-99095-00A	• O-ring • Each component

Special Tool

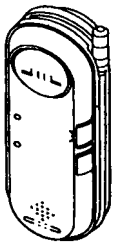	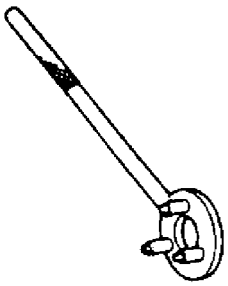	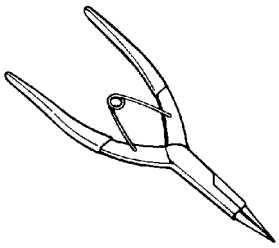
09990-86011 Gas leak detector	09920-55810 Spanner, armature plate	09900-06107 Snap ring puller (Opening type)

SECTION 3

STEERING, SUSPENSION, WHEELS AND TIRES

Diagnosis **3-2**
FRONT WHEEL ALIGNMENT . . . . . **Section 3A**
MANUAL RACK AND PINION . . . . . **Section 3B**
ELECTRICAL POWER STEERING (P/S) SYSTEM . . . . . **Section 3B1**
STEERING WHEEL AND COLUMN . . . . . **Section 3C**
FRONT SUSPENSION . . . . . **Section 3D**
REAR SUSPENSION . . . . . **Section 3E**
WHEELS AND TIRES . . . . . **Section 3F**

CONTENTS

Diagnosis 3-2
General Diagnosis 3-2
Diagnosis Table 3-2
Tire Diagnosis 3-5
Irregular and/or premature wear 3-5
Wear indicators 3-5
Radial tire waddle 3-6
Radial tire lead 3-7
Vibration Diagnosis 3-7

Diagnosis

General Diagnosis

Since the problems in steering, suspension, wheels and tires involve several systems, they must all be considered when diagnosing a complaint. To avoid using the wrong symptom, always road test the vehicle first. Proceed with the following preliminary inspection and correct any defects which are found.

1) Inspect tires for proper pressure and uneven wear.
2) Raise vehicle on a hoist and inspect front and rear suspension and steering system for loose or damaged parts.
3) Spin front wheels. Inspect for out-of-round tires, out-of-balance tires, bent rims, loosen and/or rough wheel bearings.

Diagnosis Table

Condition	Possible Cause	Correction
Vehicle Pulls (Leads)	Mismatched or uneven tires	Replace tire.
	Tires not adequately inflated	Adjust tire pressure.
	Broken or sagging springs	Replace spring.
	Radial tire lateral force	Replace tire.
	Disturbed wheel alignment	Check and adjust wheel alignment.
	Brake dragging in one road wheel	Repair brake.
	Loose, bent or broken front or rear suspension parts	Tighten or replace suspension parts.
Abnormal or Excessive Tire Wear	Sagging or broken spring	Replace spring.
	Tire out of balance	Adjust balance or replace tire.
	Disturbed wheel alignment	Check and adjust wheel alignment.
	Faulty strut (shock absorber)	Replace strut.
	Hard driving	Replace tire.
	Overloaded vehicle	Replace tire.
	Not rotating tire	Replace or rotate tire.
	Worn or loose wheel bearing	Replace wheel bearing.
	Wobbly wheel or tire	Replace wheel or tire.
	Tires not adequately inflated	Adjust tire pressure.
Wheel Tramp	Blister or bump on tire	Replace tire.
	Improper strut (shock absorber) action	Replace strut.
Shimmy, Shake or Vibration	Tire or wheel out of balance	Balance wheels or replace tire and/or wheel.
	Loose wheel bearings	Replace wheel bearing.
	Worn tie rod ends	Replace tie rod end.
	Worn lower ball joints	Replace front suspension arm.
	Excessive wheel runout	Repair or replace wheel and/or tire.
	Blister or bump on tire	Replace tire.
	Excessively loaded radial runout of tire / wheel assembly	Replace tire or wheel.
	Disturbed wheel alignment	Check and adjust wheel alignment.
	Loose or worn steering linkage	Tighten or replace steering linkage.
	Loose steering gear case bolts	Tighten case bolts.

Condition	Possible Cause	Correction
Hard Steering	Tire not adequately inflated	Inflate tires to proper pressure.
	Malfunction of power steering system	Check and correct.
	Bind in tie rod end ball studs or lower ball joints	Replace tie rod end or front suspension arm.
	Disturbed front wheel alignment	Check and adjust front wheel alignment.
	Rack and pinion adjustment	Check and adjust rack and pinion torque.
	Bind in steering column	Repair or replace steering column.
Too Much Play in Steering	Wheel bearings worn	Replace wheel bearing.
	Loose steering gear case bolts	Tighten gear case bolts.
	Rack and pinion adjustments	Check and adjust rack and pinion torque.
	Worn steering shaft joints	Replace joint.
	Worn tie rod ends or tie rod inside ball joints	Replace tie rod end or tie rod.
	Worn lower ball joints	Replace front suspension control arm.
Poor Returnability	Bind in tie rod end ball studs	Replace tie rod end.
	Bind in ball joints	Replace front suspension arm.
	Bind in steering column	Repair or replace steering column.
	Poorly lubricated rack and pinion	Check, repair or lubricate rack and pinion.
	Disturbed front end alignment	Check and adjust front end alignment.
	Rack and pinion adjustment	Check and adjust rack and pinion torque.
	Tires not adequately inflated	Adjust tire pressure.
Rack and Pinion Noise (Rattle or Chuckle)	Loose steering gear case bolts	Tighten steering gear case bolts.
	Worn rack bush	Replace rack bush.
	Rack and pinion adjustment	Check and adjust rack and pinion torque.
Abnormal Noise, Front End	Worn, sticky or loose tie rod ends, lower ball joints, tie rod inside ball joints or drive shaft joints	Replace tie rod end, suspension arm, tie rod or drive shaft joint.
	Damaged struts or mountings	Repair or replace.
	Worn suspension arm bushings	Replace arm bushings.
	Loose stabilizer bar	Tighten bolts or nuts, replace bushes.
	Loose wheel bolts (or nuts)	Tighten wheel bolts (or nuts).
	Loose suspension bolts or nuts	Tighten suspension bolts or nuts.
	Broken or otherwise damaged wheel bearings	Replace wheel bearings.
	Broken suspension springs	Replace springs.
	Poorly lubricated or worn strut bearings	Replace strut bearing.

Condition	Possible Cause	Correction
Wander or Poor Steering Stability	Mismatched or uneven tires	Replace or inflate tires to proper pressure.
	Loose ball joints and tie rod ends	Replace suspension arm or tie rod end.
	Faulty struts or mountings	Replace strut or repair mounting.
	Loose stabilizer bar	Tighten or replace stabilizer bar or bush.
	Broken or sagging springs	Replace spring.
	Rack and pinion adjustment	Check and adjust rack and pinion torque.
	Disturbed front wheel alignment	Check and adjust front wheel alignment.
Erratic Steering When Braking	Worn wheel bearings	Replace wheel bearing.
	Broken or sagging springs	Replace coil spring.
	Wheel tires are inflated unequally	Inflate tires to proper pressure.
	Disturbed front wheel alignment	Check and adjust front wheel alignment.
	Brakes not working in unison	Check and repair brake system.
	Leaking wheel cylinder or caliper	Repair or replace wheel cylinder or caliper.
	Warped discs	Replace brake disc.
	Badly worn brake linings	Replace brake shoe lining.
	Drum is out of round in some brakes	Replace brake drum.
	Defective wheel cylinders	Replace or repair wheel cylinder.
Low or Uneven Trim Height **NOTE:** **See NOTE *1.**	Broken or sagging suspension springs	Replace suspension spring.
	Over loaded	Check loading.
	Incorrect suspension springs	Replace suspension spring.
Ride Too Soft	Faulty struts (shock absorber)	Replace struts or absorber.
Suspension Bottoms	Overloaded	Check loading.
	Faulty struts (shock absorber)	Replace strut.
	Incorrect, broken or sagging springs	Replace springs.
Body Leans or Sways in Corners	Loose stabilizer bar	Tighten stabilizer bar bolts or nuts, or replace bushes.
	Faulty struts (shock absorbers) or mountings	Replace strut or tighten mounting.
	Broken or sagging springs	Replace suspension springs.
	Overloaded	Check loading.
Cupped Tires	Front struts defective	Replace struts.
	Worn wheel bearings	Replace wheel bearings.
	Excessive tire or wheel run-out	Replace tire or wheel disc.
	Worn ball joints	Replace front suspension arm.
	Tire out of balance	Adjust tire balance.

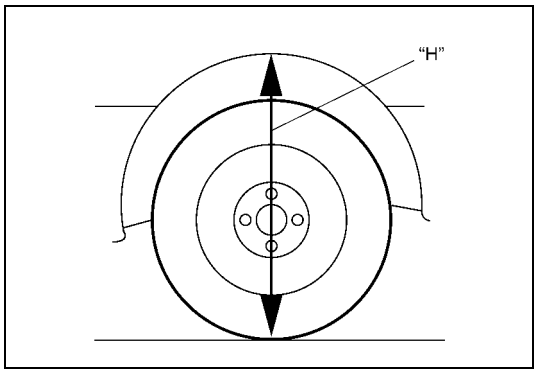

NOTE:

***1: Right-to-left trim height ("H") difference should be within 15 mm (0.6 in.) with curb weight. (same with rear side.)**

Tire Diagnosis

Irregular and/or premature wear

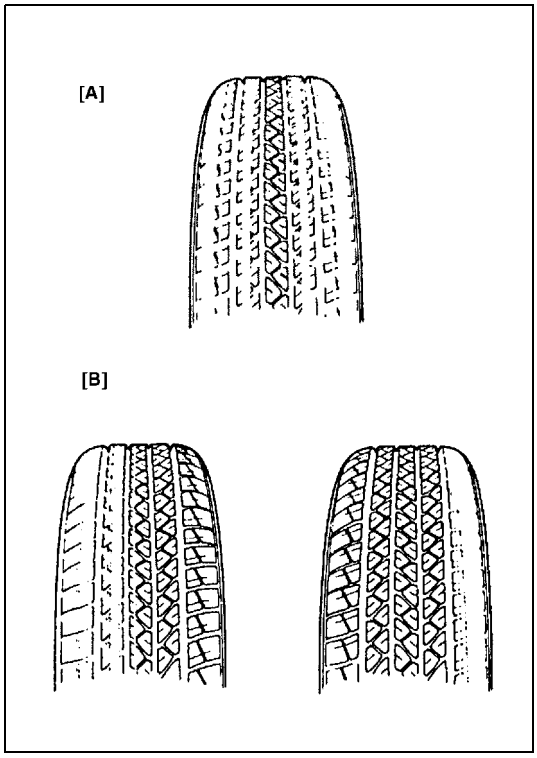

Irregular and premature wear has many causes. Some of them are: incorrect inflation pressures, lack of tire rotation, driving habits, improper alignment.

If the following conditions are noted, rotation is necessary:

- Front tire wear is different from rear.
- Uneven wear exists across the tread of any tire.
- Front tire wear is unequal between the right and left.
- Rear tire wear is unequal between the right and left.
- There is cupping, flat spotting, etc.

A wheel alignment check is necessary if following conditions are noted:

- Front tire wear is unequal between the right and left.
- Wear is uneven across the tread of any front tire.
- Front tire treads have scuffed appearance with "feather" edges on one side of tread ribs or blocks.

[A] :	Hard cornering, under inflation or lack of tire rotation
[B] :	Incorrect wheel alignment, tire construction not uniform or wheel heavy acceleration

Wear indicators

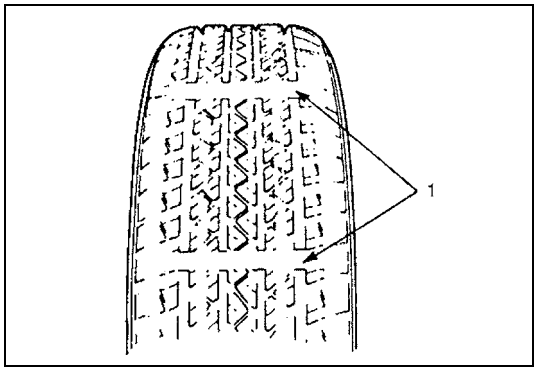

Original equipment tires have built-in tread wear indicators (1) to show when they need replacement.

These indicators (1) will appear as approx. 12 mm (0.47 in) wide bands when the tire tread depth becomes 1.6 mm (0.063 in).

When the indicators (1) appear in 3 or more grooves at 6 locations, tire replacement is recommended.

Radial tire waddle

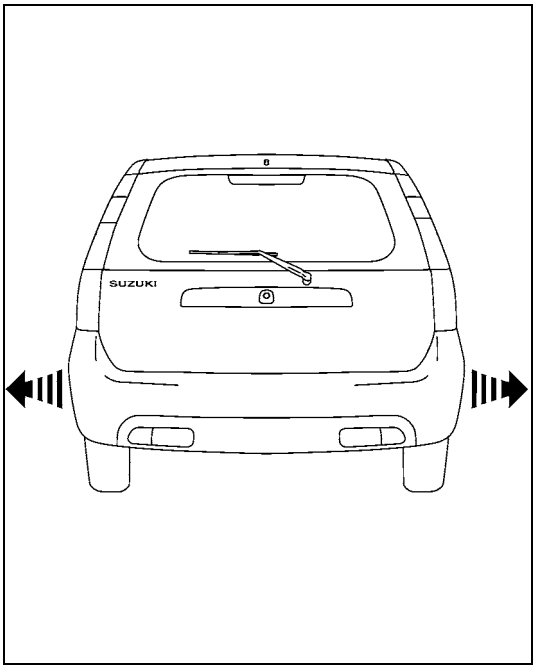

Waddle is side to side movement at the front and/or rear of the vehicle. It is caused by the steel belt not being straight within the tire. It is most noticeable at a low speed, 8 to 48 kph (5 to 30 mph). It is possible to locate the faulty tire by road testing the vehicle. If it is on the rear, the rear end of the vehicle shakes from side to side or “waddles”. To the driver in the seat, it feels as though someone is pushing on the side of vehicle.
If the faulty tire is on the front, waddling is more visual. The front sheet metal appears to be moving back and forth and the driver feels as though he is at the pivot point in vehicle.
Waddle can be quickly diagnosed by using Tire Problem Detector (TPD) and following the equipment manufacture’s recommendations.
If TPD is not available, an alternative method of substituting known-good tire / wheel assemblies can be used as follows, although it takes a longer time.

1) Ride vehicle to determine whether the front or rear waddles.
2) Install tires and wheels that are known to be good (on similar vehicle) in place of those on waddling end of vehicle. If waddling end cannot be identified, substitute rear ones.
3) Road test again. If improvement is noted, reinstall originals one at a time till waddle causal tire is found. If no improvement is noted, install known-good tires in place of all four. Then reinstall originals in the same manner as above.

EQUIPMENT MANUFACTURE’S RECOMMENDATIONS

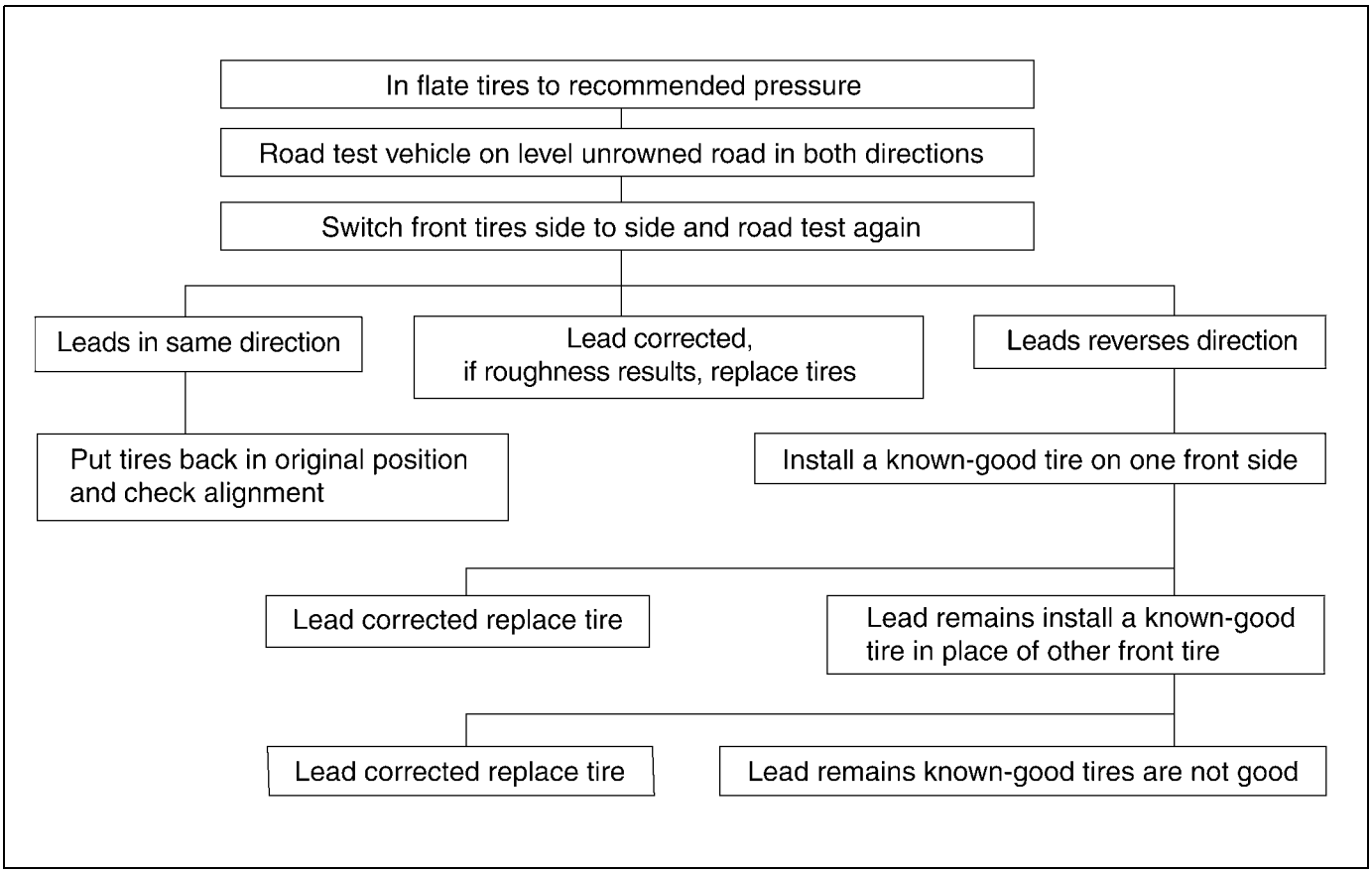
In flate tires to recommended pressure
Road test vehicle on level unrowned road in both directions
Switch front tires side to side and road test again
Leads in same direction
Lead corrected,
if roughness results, replace tires
Leads reverses direction
Put tires back in original position
and check alignment
Install a known-good tire on one front side
Lead corrected replace tire
Lead remains install a known-good
tire in place of other front tire
Lead corrected replace tire
Lead remains known-good tires are not good

Radial tire lead

"Lead" is the deviation of the vehicle from a straight path on a level rod even with no pressure on the steering wheel.

Lead is usually caused by:

- Incorrect alignment.
- Uneven brake adjustment.
- Tire construction.

The way in which a tire is built can produce lead in a vehicle. An example of this is placement of the belt. Off center belts on radial tires can cause the tire to develop a side force while rolling straight down the road. If one side of the tire has a little larger diameter than the other, the tire will tend to roll to one side. This will develop a side force which can produce vehicle lead.

The procedure in previous page should be used to make sure that front alignment is not mistaken for tire lead.

- Part of the lead diagnosis procedure is different from the proper tire rotation pattern currently in the owner and service manuals. If a medium to high mileage tire is moved to the other side of the vehicle, be sure to check that ride roughness has not developed
- Rear tires will not cause lead.

Vibration Diagnosis

Wheel unbalance causes most of the highway speed vibration problems. If a vibration remains after dynamic balancing, its possible causes are as follows.

- Tire runout.
- Wheel runout.
- Tire stiffness variation.

Measuring tire and/or wheel free runout will uncover only part of the problem. All three causes, known as loaded radial runout, must be checked by using a Tire Problem Detector (TPD). If TPD is not available, alternative method of substituting known-good tire and wheel assemblies on the problem vehicle can be used, although it takes a longer time.

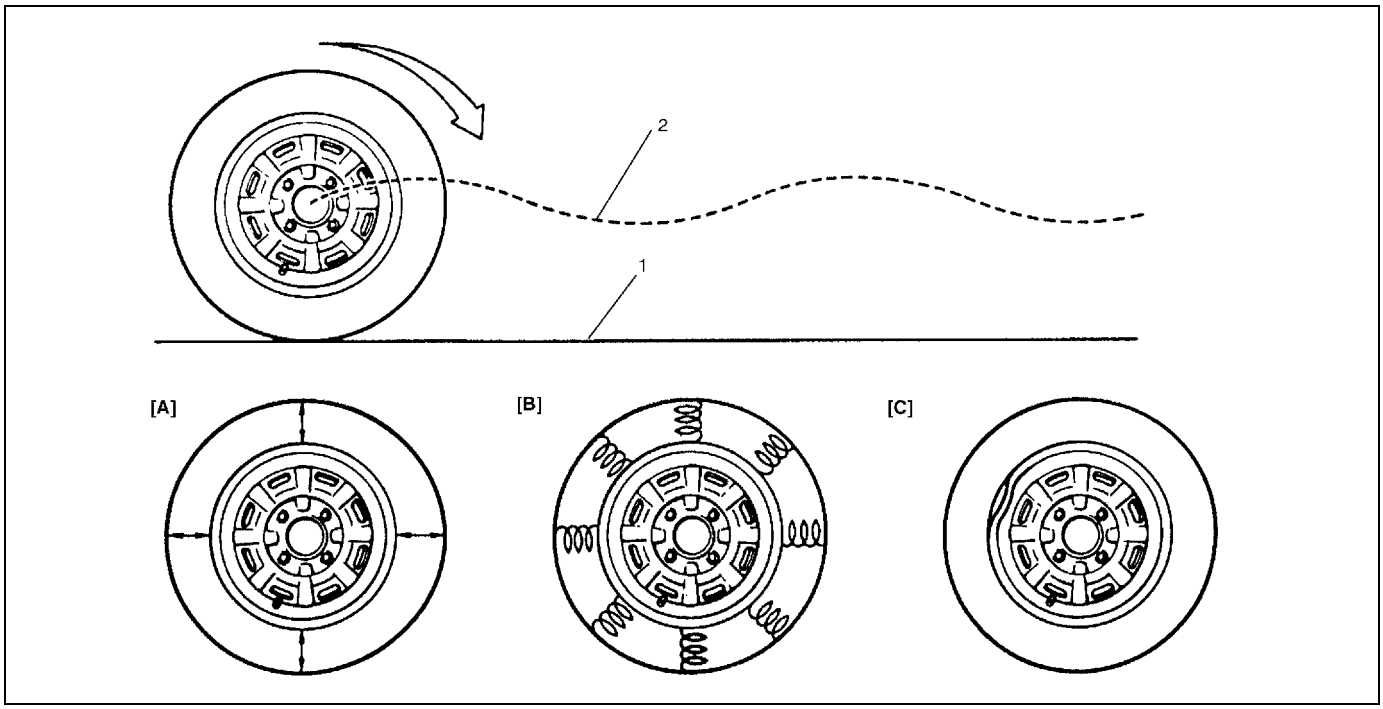

[A] : Caused by tire out of round	1. Smooth road
[B] : Caused by tire stiffness variation	2. Suspension movement (loaded runout)
[C] : Caused by rim bent or out of round	

SECTION 3A

FRONT WHEEL ALIGNMENT

CONTENTS

General Description 3A-2
Front Wheel Alignment Construction 3A-2
Toe setting 3A-2
Camber 3A-2
Diagnosis 3A-3
Diagnosis Table 3A-3
Wheel Alignment Specifications 3A-3
Front Wheel Alignment Specifications 3A-3
Repair Instruction 3A-3
Front Wheel Alignment Inspection and Adjustment 3A-3
Preliminary checks prior to adjusting front alignment 3A-3
Toe inspection and adjustment 3A-4
Camber and caster check and adjustment 3A-5
Steering angle check and adjustment 3A-5
Side slip (reference information) 3A-5
Tightening Torque Specifications 3A-5

General Description

Front Wheel Alignment Construction

Front alignment refers to the angular relationship between the front wheels, the front suspension attaching parts and the ground. Generally, the only adjustment required for front alignment is toe setting.
Camber and caster can't be adjusted. Therefore, should camber or caster be out of specification due to the damage caused by hazardous road conditions or collision, whether the damage is in body or in suspension should be determined.
If the body is damaged, it should be repaired and if suspension is damaged, it should be replaced.

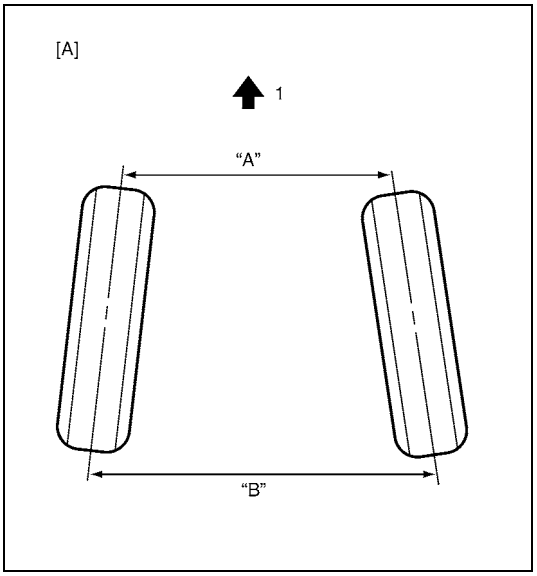

Toe setting

Toe is the turning in or out of the front wheels. The purpose of a toe specification is to ensure parallel rolling of the front wheels (Excessive toe-in or toe-out may increase tire wear).
Amount of toe can be obtained by subtracting "A" from "B" as shown in figure and therefore is given in mm (in.).

[A]: Wheel top view
1. Forward

Camber

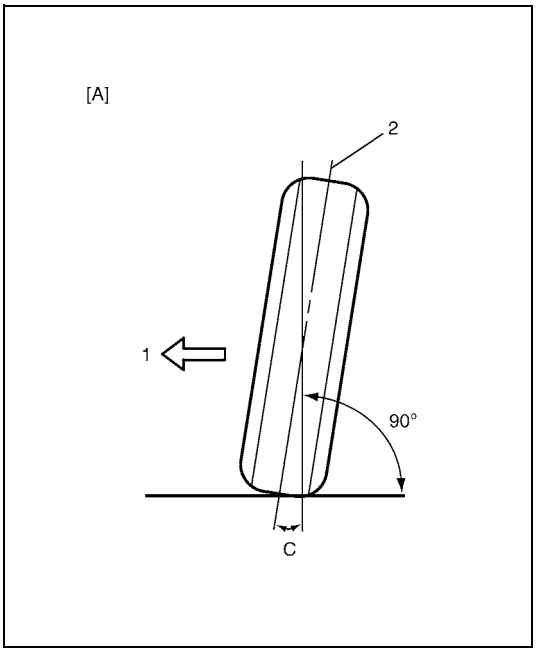

Camber is the tilting of the front wheels from the vertical, as viewed from the front of the vehicle. When the wheels tilt outward at the top, the camber is positive. When the wheels tilt inward at the top, the camber is negative. The amount of tilt is measured in degrees.

1. Body center	[A]: Front view
2. Center line of wheel	

Diagnosis

Diagnosis Table

For the details, refer to “Diagnosis Table” in Section 3.

Wheel Alignment Specifications

Front Wheel Alignment Specifications

Item		Front Wheel	
		2WD	4WD
Toe (total)		IN 2 ± 1 mm	←
Camber		0 ° ± 1 °	←
Caster		3 ° 09’ ± 1 °	←
Side Slip Limit mm/m (in./ 3.3 ft)		IN 3 – 0	←
Steering Angle (Turning angle)	Inside	35 ° ± 2 °	←
	Outside	31 ° (Reference)	←

NOTE:

Toe value in the specifications table was measured by using a toe-in gauge.

Repair Instruction

Front Wheel Alignment Inspection and Adjustment

Preliminary checks prior to adjusting front alignment

Steering and vibration complaints are not always the result of improper alignment. An additional item to be checked is the possibility of tire lead due to worn or improperly manufactured tires. “Lead” is the deviation of the vehicle from a straight path on a level road without hand pressure on the steering wheel. Procedure for determining the presence of a tire lead problem contains in Section 3. Before making any adjustment affecting toe setting, the following checks and inspections should be made to ensure correctness of alignment readings and alignment adjustments:

- Check all tires for proper inflation pressures and approximately the same tread wear.
- Check for loose of ball joints. Check tie-rod ends; if excessive looseness is noted, it must be corrected before adjusting.
- Check for run-out of wheels and tires.
- Check vehicle trim heights; if out of limits and a correction is to be made, it must be made before adjusting toe.
- Check for loose of suspension arms.
- Check for loose or missing stabilizer bar attachments.
- Consideration must be given to excess loads, such as tool boxes. If this excess load is normally carried in vehicle, it should remain in vehicle during alignment checks.
- Consider condition of equipment being used to check alignment and follow manufacturer's instructions.
- Regardless of equipment used to check alignment, vehicle must be on a level surface both fore and aft and transversely.

NOTE:

To prevent possible incorrect reading of camber of caster, vehicle front (or rear) end must be moved up and down a few times before inspection.

Toe inspection and adjustment

Preparation for toe inspection and adjustment.

- Place vehicle in non-loaded state on level floor.
- Set steering wheel in straight state.
- Check that inflation pressure of each tire is adjusted properly and disc wheel is free from deflection.
- Check that each suspension part is free from bend, dent, wear or damage in any other form.
- Check that ground clearance at the right and left is just about the same.

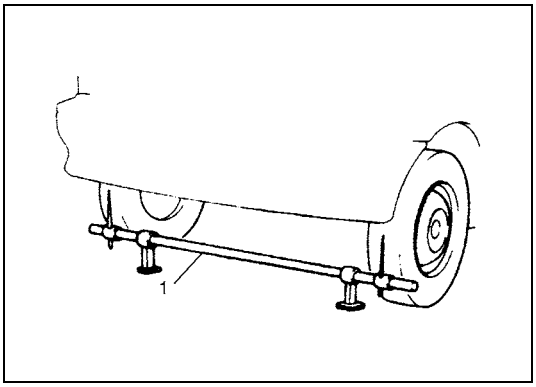

1) Check toe with toe-in gauge (1). Refer to “Wheel Alignment Specifications” for specified value. It is out of specification, adjust it as follows.

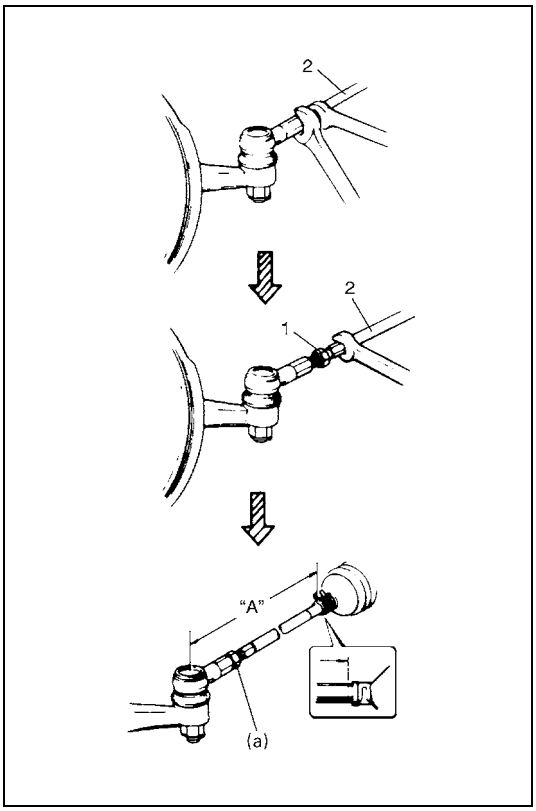

2) Toe is adjusted by changing tie-rod length.
3) Loosen right and left tie-rod end lock nuts (1) first.

NOTE:

Before rotating tie-rods (2), apply grease between tie-rods and rack boots so that boots won't be twisted.

4) Rotate right and left tie-rods (2) by the same amount to align toe to specification. In this adjustment, right and left tie-rods (2) should become equal in length “A”.
5) After adjustment, tighten lock nuts (1) to specified torque.

Tightening torque
Tie-rod end lock nut (a): 45 N·m (4.5 kg-m, 32.5 lb-ft)

NOTE:

Make sure that rack boots are not twisted.

Camber and caster check and adjustment

1) To prevent possible incorrect reading of camber or caster, vehicle front end must be moved up and down a few times before inspection.
2) Check camber and caster using camber and caster gauge. Refer to “Wheel Alignment Specifications:” for specified value.
3) Should camber or caster be found out of specifications upon inspection, locate its cause first. if it is in damaged, loose, bent, dented or worn suspension parts, they should be replaced. If it is in body, repair it so as to attain specifications.

Steering angle check and adjustment

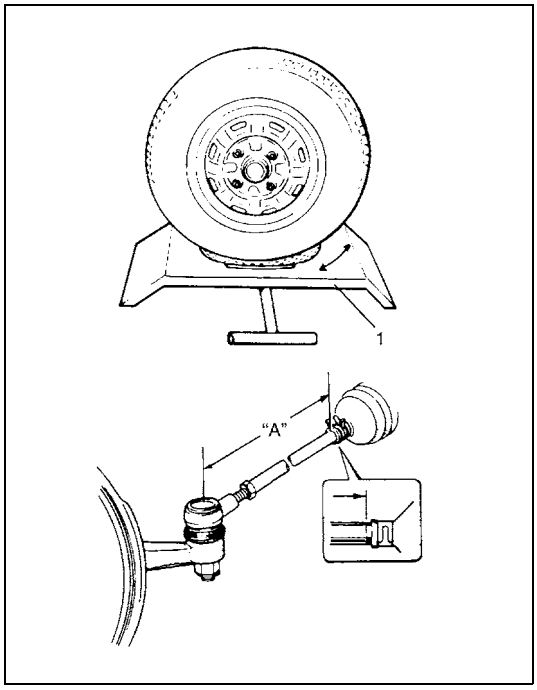

When tie-rod or tie-rod end was replaced, check toe and then also steering angle with turning radius gauge (1).
If steering angle is not correct, check if right and left tie-rods are equal in length (“A” in figure).

NOTE:

If tie-rod lengths were changed to adjust steering angle, reinspect toe.

1. Turning radius gauge

Side slip (reference information)

For inspecting front wheel side slip with side slip tester:
If side slip exceeds limit, toe or front wheel alignment may not be correct.

NOTE:

When side slip limit is exceeded or when adjusting wheel alignment while doing some other work, adjust alignment so as to obtain above side slip adjusting value.

Tightening Torque Specifications

Fastening part	Tightening torque		
	N•m	kg-m	lb-ft
Tie-rod end lock nut	45	4.5	32.5

SECTION 3B

MANUAL RACK AND PINION

WARNING:

For vehicles equipped with Supplemental Restraint (Air Bag) System:

- **Service on and around the air bag system components or wiring must be performed only by an authorized SUZUKI dealer. Refer to "System Components and Wiring Location View" under "General Description" in air bag system section in order to confirm whether you are performing service on or near the air bag system components or wiring. Please observe all WARNINGS and "Service Precautions" under "On-Vehicle Service" in air bag system section before performing service on or around the air bag system components or wiring. Failure to follow WARNINGS could result in unintentional activation of the system or could render the system inoperative. Either of these two conditions may result in severe injury.**
- **Technical service work must be started at least 90 seconds after the ignition switch is turned to the "LOCK" position and the negative cable is disconnected from the battery. Otherwise, the system may be activated by reserve energy in the Sensing and Diagnostic Module (SDM).**

NOTE:

All steering gear fasteners are important attaching parts in that they could affect the performance of vital parts and systems, and/or could result in major repair expense. They must be replaced with one of the same part number or with an equivalent part if replacement becomes necessary. Do not use a replacement part of lesser quality or substitute design. Torque values must be used as specified during reassembly to assure proper retention of these parts.

CONTENTS

General Description 3B-2
Rack and Pinion Steering Construction 3B-2
Diagnosis 3B-3
Diagnosis Table 3B-3
Steering Wheel Check 3B-3
Steering Rack Boot Check 3B-3
Tie Rod End Boot Check 3B-4
Steering Shaft Joint Check 3B-4
Tie Rod End Check 3B-4
On-Vehicle Service 3B-5
Rack and Pinion Assembly Components 3B-5
Tie Rod End Removal and Installation 3B-6
Steering Gear Case Removal and Installation 3B-8
Unit Repair 3B-13
Rack Boot / Tie Rod Removal and Installation 3B-13
Steering Rack Plunger Removal and Installation 3B-15
Steering Rack Plunger Inspection 3B-16
Steering Pinion Removal and Installation 3B-17
Steering Pinion Inspection 3B-18
Steering Rack Removal and Installation 3B-18
Steering Rack Inspection 3B-19
Pinion Bearing Removal and Installation 3B-20
Required Service Material 3B-20
Special Tool 3B-21

General Description

Rack and Pinion Steering Construction

The rack and pinion steering system consists of two components, the rack (1) and the pinion (2). When the steering wheel (3) is turned, the motion is transmitted to the steering shaft joint (4) and then to the pinion (2). Since the pinion teeth mesh with teeth on rack, the motion is further transferred to the rack and changed to linear motion. The force is then transmitted through the tie rods (5) to the steering knuckles (6) which turn wheels.

NOTE:

Although the figure below shows only the left-hand steering vehicle, the same work procedure and data apply to the right-hand steering vehicle.

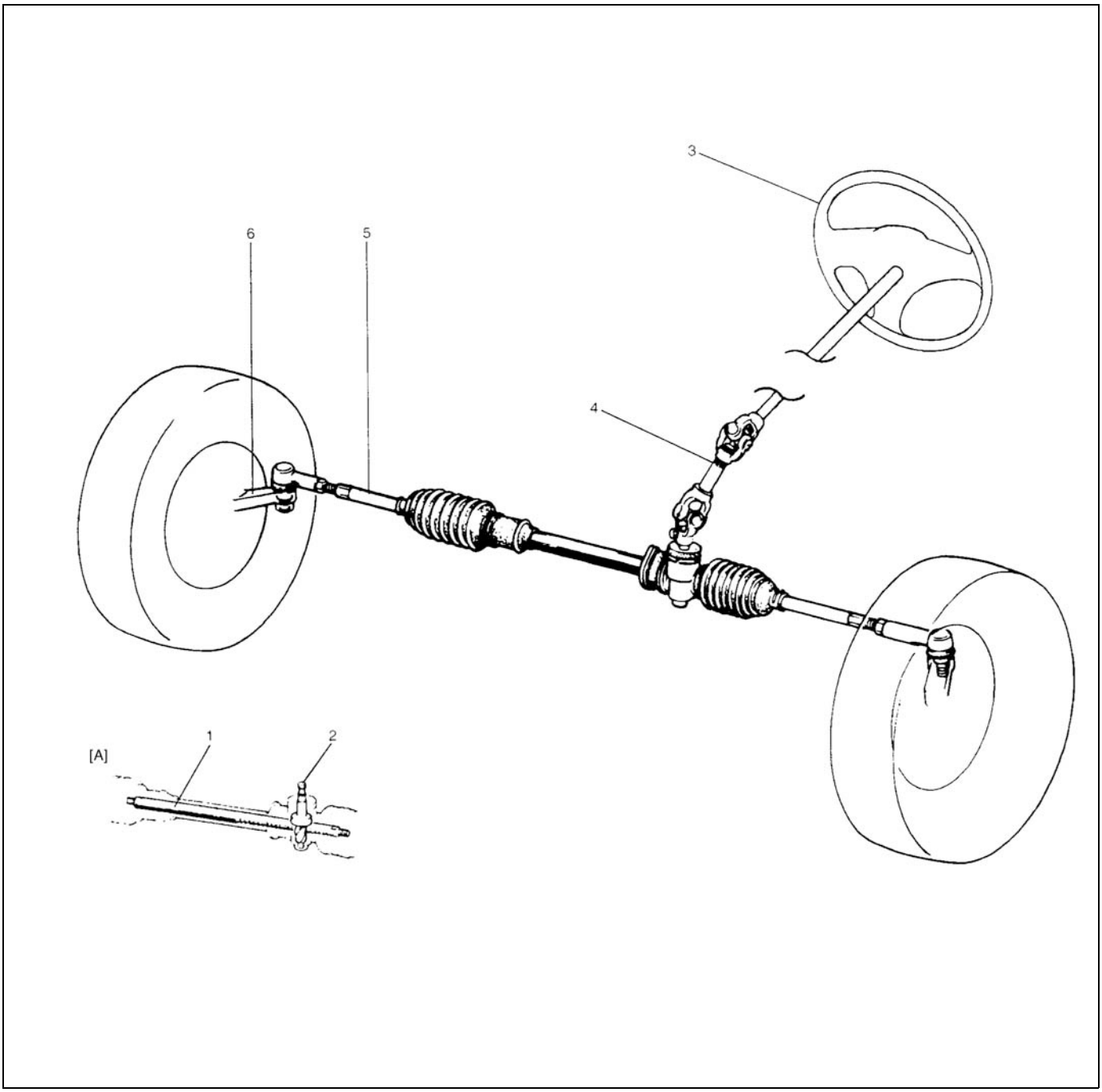

[A]: Rack and Pinion

Diagnosis

Diagnosis Table

Refer to Section 3.

Steering Wheel Check

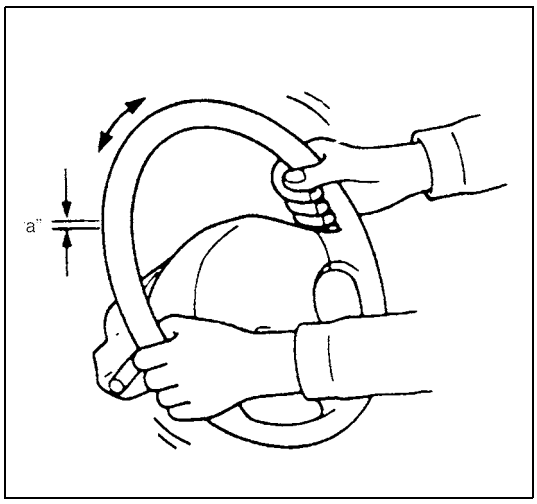

Check steering wheel for play and rattle, holding vehicle in straight forward condition on the ground.

Steering wheel play
"a": 0 – 30 mm (0 – 1.1 in.)

If steering wheel play is not within specification, inspect as follows and replace if found defective.

- Tie-rod end ball stud for wear (Ball stud should move when more than 0.2 N·m (2 kg-cm,0.44 lb-ft) torque is applied.)
- Lower ball joint for wear
- Steering shaft joint for wear
- Steering pinion or rack gear for wear or breakage
- Each part for looseness

Steering Rack Boot Check

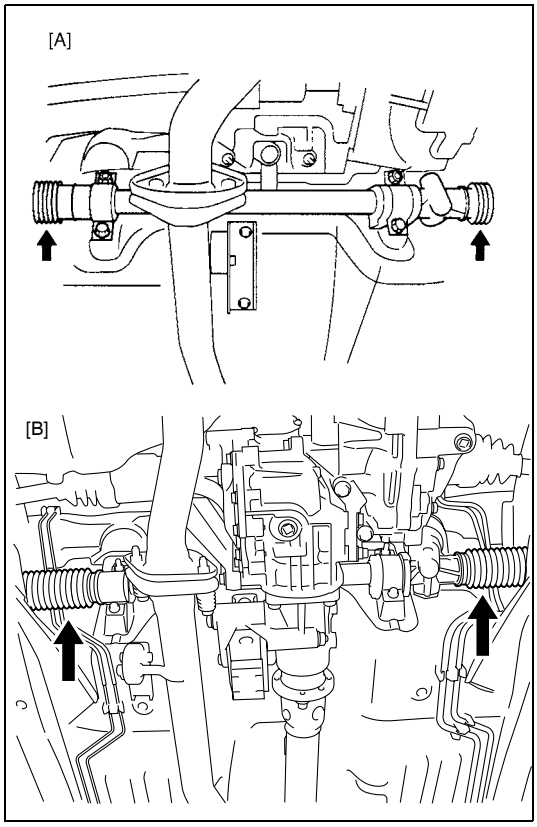

Hoist vehicle.
Inspect each boot for tear. A torn boot allows entry of dust and water which can cause wear to steering rack and pinion to produce noise as well as rust to result in malfunction of steering system.
If even a small tear is noted, replace with new one.
Also, check each boot for dent. If there is a dent, keep boot in most compressed state for some seconds to correct dent.

Boots should be visually inspected for any damage, dent and tear during every periodical inspection at specified intervals and whenever vehicle is hoisted for any other purpose.

[A]: 2WD model
[B]: 4WD model

Tie Rod End Boot Check

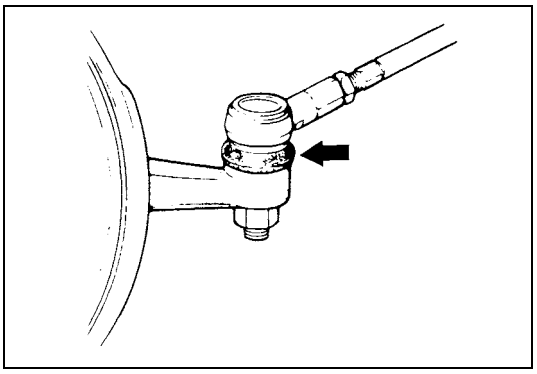

Inspect each boot for tear. If even a small tear is noted, replace with new one.

Steering Shaft Joint Check

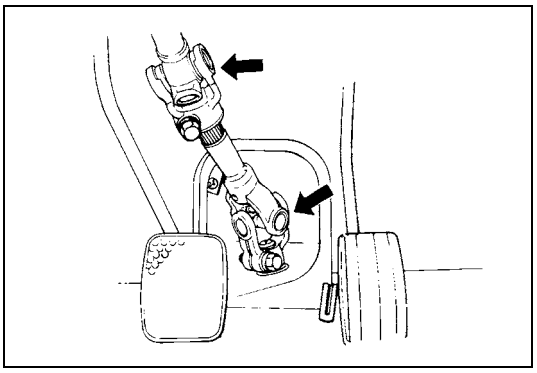

Check shaft joint for wear, breakage and other damage and replace if any defect exists.

Tie Rod End Check

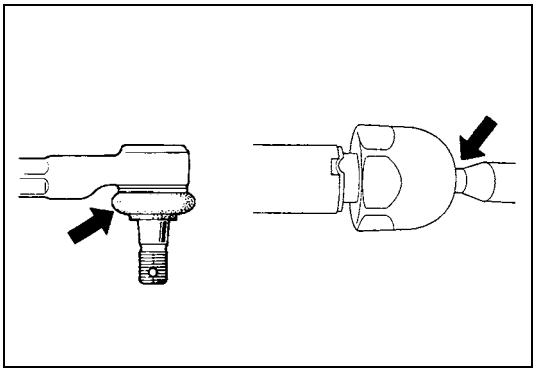

1) Inspect for play in ball joint.
2) Inspect for play in rack end ball joint.
   In either case, if found defective, replace.

On-Vehicle Service

Rack and Pinion Assembly Components

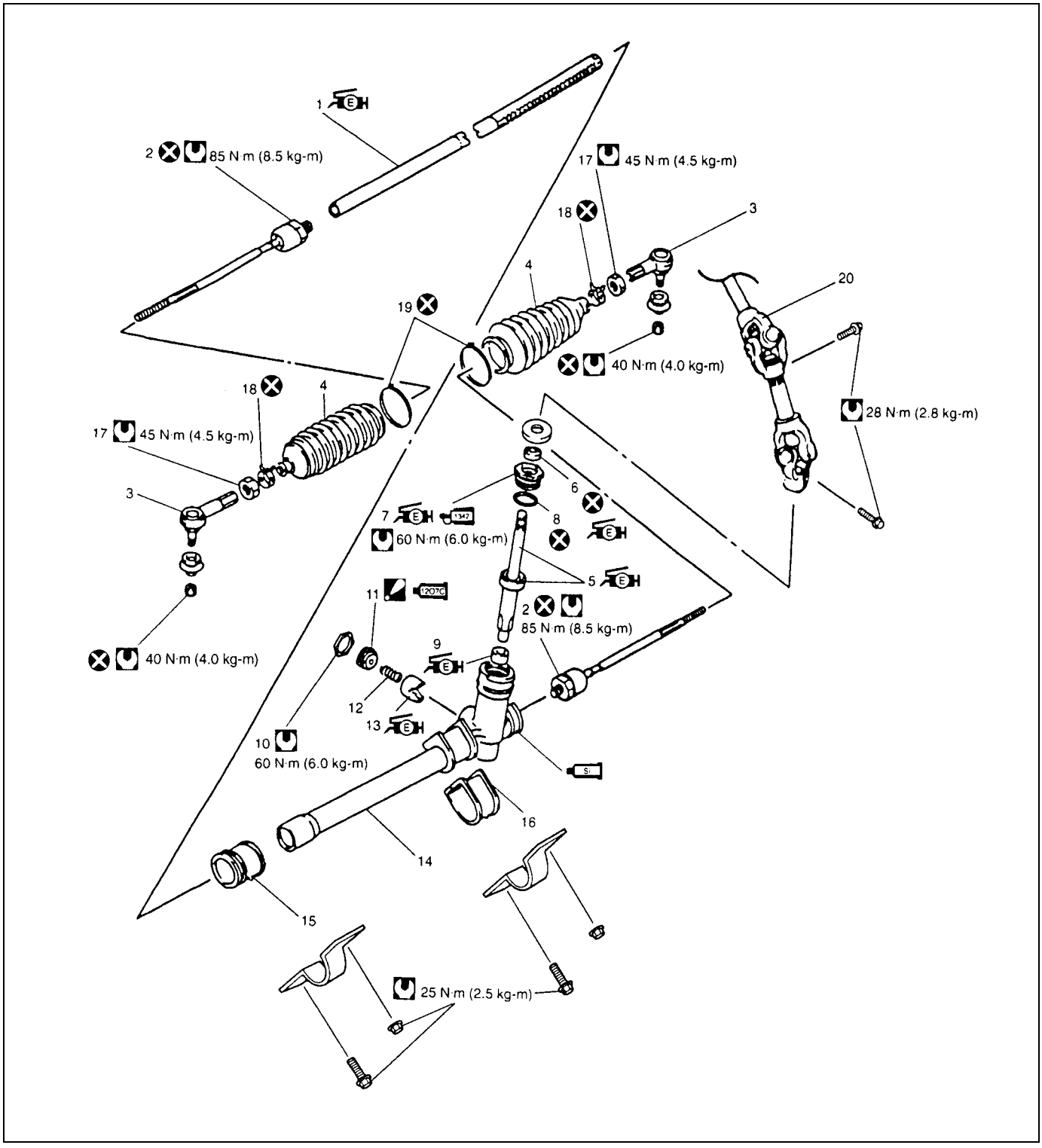

	1. Steering rack : Apply grease 9900-25050 to teeth surface of rack.		12. Rack plunger spring
	2. Steering tie rod		13. Steering rack plunger : Apply grease 99000-25050 to sliding part of plunger.
	3. Tie rod end	Si	14. Steering rack housing and gear case : Apply sealant 99000-31120 between boot and grooves of gear case.
	4. Boot		15. Steering rack side mount
	5. Steering pinion : Apply grease 99000-25050 to pinion shaft.		16. Steering pinion side mount
	6. Steering gear case oil seal : Apply grease 99000-25050 to oil seal lip.		17. Tie rod end lock nut
1342	7. Pinion bearing plug : Apply grease 99000-25050 to inside of pinion bearing plug. : Apply thread lock cement 1342 99000-32050 to plug thread.		18. Rack boot clip
	8. O-ring : Apply grease 99000-25050 to O-ring		19. Band
	9. Steering pinion needle bearing : Apply grease 99000-25050 to rollers of bearing.		20. Steering shaft joint
	10. Lock nut		Tightening torque
1207D	11. Rack damper screw : Tighten rack damper screw so that rotation torque becomes as specified. : Apply sealant 99000-31250 to all around thread part of rack damper screw.		Do not reuse.

Tie Rod End Removal and Installation

REMOVAL

1) Hoist vehicle and remove wheel referring to “Wheel Removal and Installation” in Section 3F.

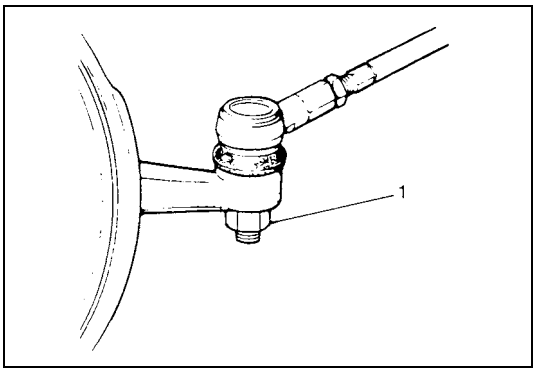

2) Remove tie rod end nut (1) from steering knuckle.

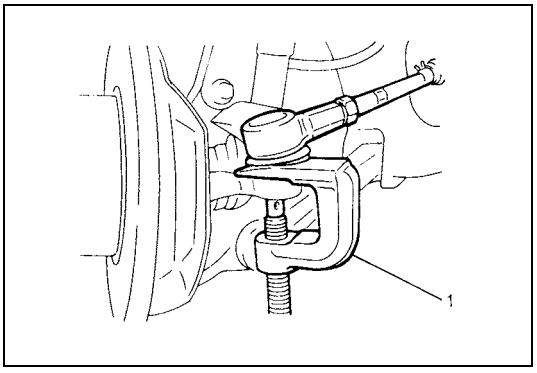

3) Disconnect tie rod end from knuckle, using puller (1).

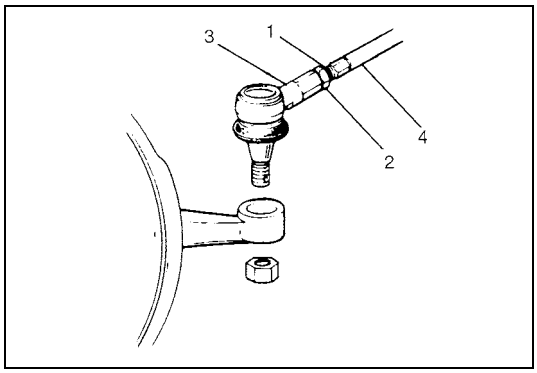

4) For ease of adjustment after installation, make marking (1) of tie rod end lock nut (2) position on tie rod end thread. Then loosen lock nut (2) and remove tie rod end (3) from tie rod (4).

INSTALLATION

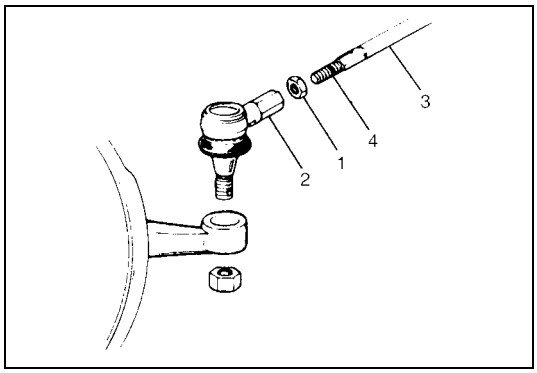

1) Install tie rod end lock nut (1) and tie rod end (2) to tie rod (3). Align lock nut with mark (4) on tie rod thread.

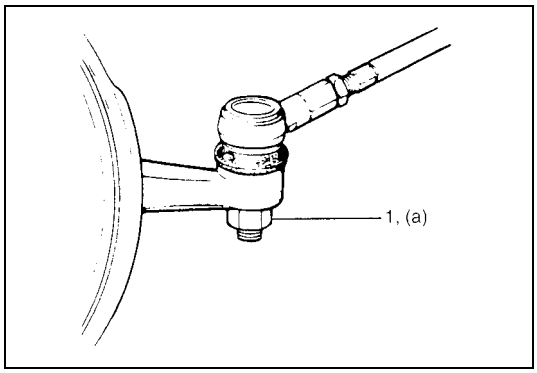

2) Connect tie rod end to knuckle. Tighten new tie rod end nut (1) to specified torque.

Tightening torque
Tie rod end nut (a): 40 N·m (4.0 kg-m, 29.0 lb-ft)

3) Inspect for proper toe (Refer to “FRONT WHEEL ALIGNMENT”).

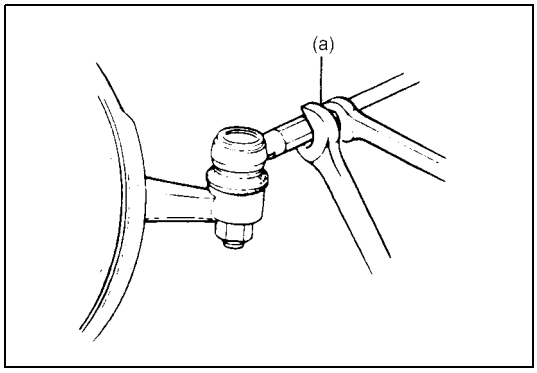

4) After confirming proper toe, tighten tie rod end lock nut to specified torque.

Tightening torque
Tie rod end lock nut (a): 45 N·m (4.5 kg-m, 32.5 lb-ft)

5) Tighten wheel bolts to specified torque and lower hoist.

Tightening torque
Wheel bolt: 95 N·m (9.5 kg-m, 69.0 lb-ft)

Steering Gear Case Removal and Installation

REMOVAL

CAUTION:
Be sure to set front wheels in straight direction and remove ignition key from key cylinder before these steps, otherwise contact coil of air bag system may get damaged.

1) Slide driver's seat as far back as possible.

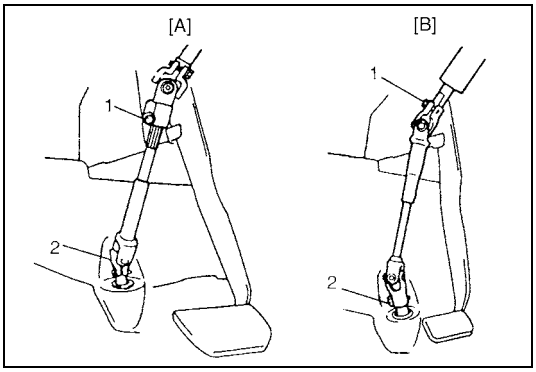

2) For ease of installation, loosen steering shaft upper joint bolt (1) but don't remove.
3) Remove steering shaft lower joint bolt (2).
4) Disconnect lower joint from pinion.

[A]: Power steering
[B]: Manual steering

5) Hoist vehicle and remove both wheels referring to "Wheel Removal and Installation" in Section 3F.

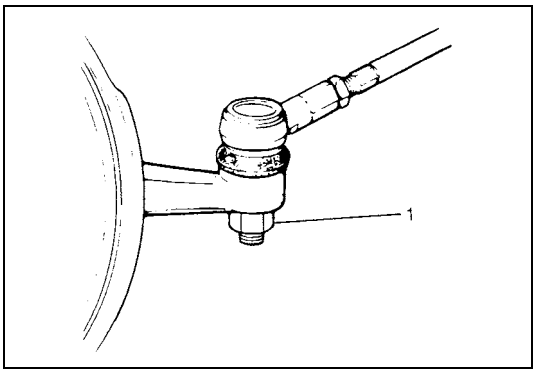

6) Remove tie rod end nuts (1) from both steering knuckles.

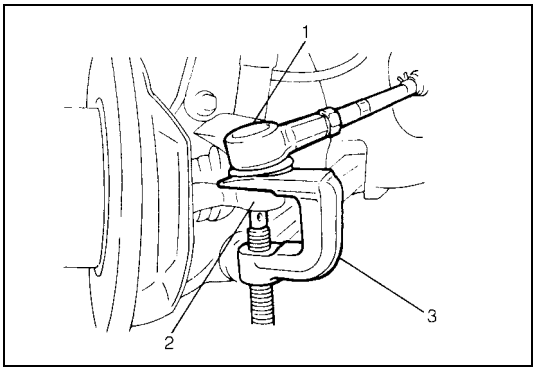

7) Disconnect both tie rod ends (1) from knuckles (2), using puller (3).

8) To remove the steering gear case easily, lower the engine with transmission, but don't remove.

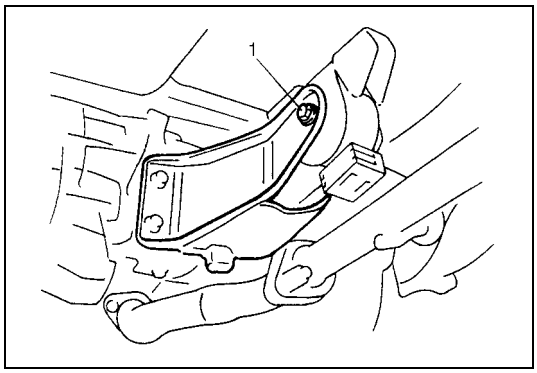

• 2WD model

a) Support engine with transmission by transmission jack and then remove engine rear mounting bolt (1).

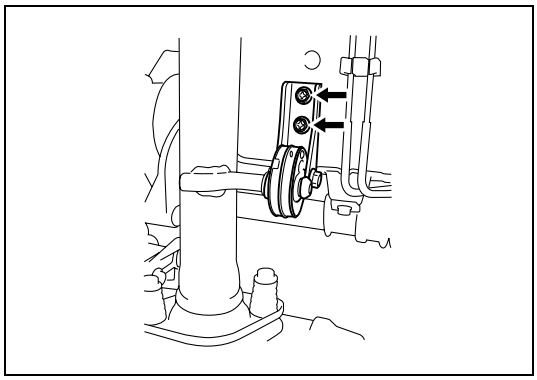

• 4WD model

a) Remove exhaust pipe bracket bolts.

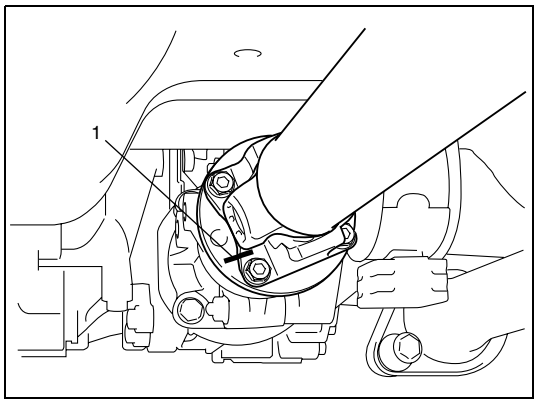

b) Make marking (1) on propeller shaft and joint flange as shown, and then remove the universal joint bolts.

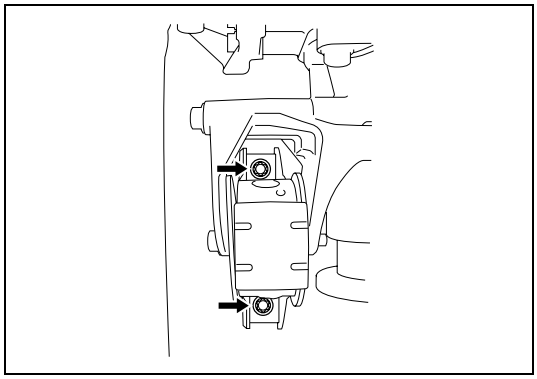

c) Support engine with transmission by transmission jack and then remove engine rear mount bracket from floor panel.

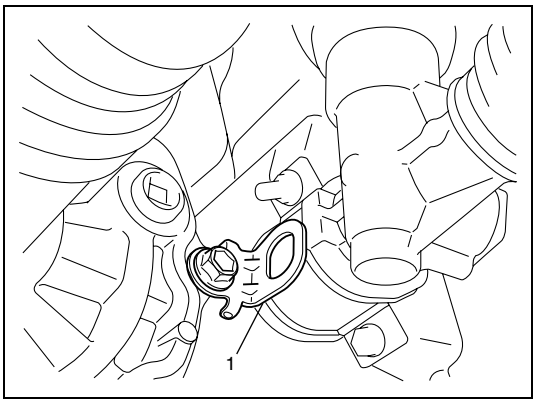

d) Remove bracket (1).

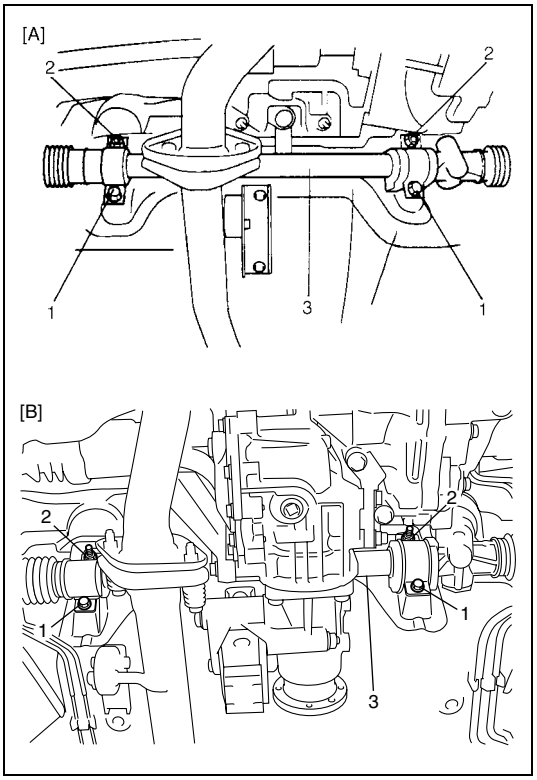

9) Remove steering gear case mount bolts (1), nuts (2) and gear case brackets, then remove gear case (3).

[A]: 2WD model
[B]: 4WD model

INSTALLATION

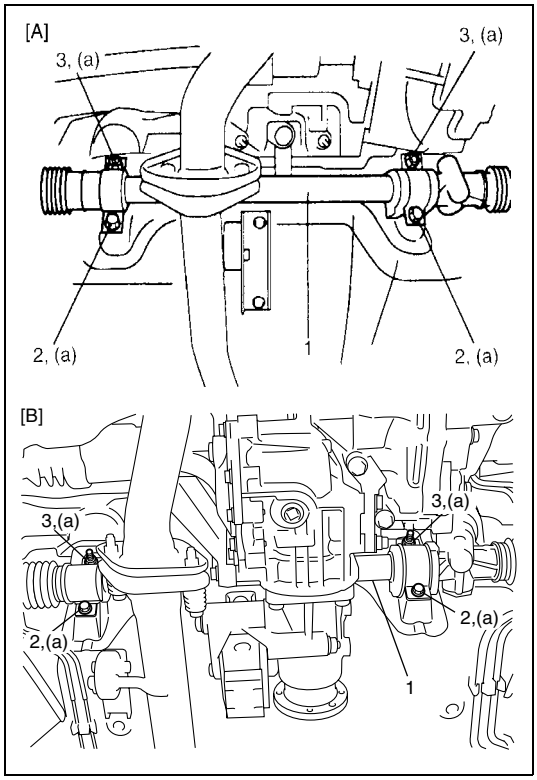

1) Apply grease to inside of pinion packing and install pinion packing onto pinion. Mount steering gear case (1) to body and tighten gear case mounting bolts (2) and nuts (3) to specified torque.

Tightening torque
Steering gear case mounting bolt and nut
(a): 25 N·m (2.5 kg-m, 18.0 lb-ft)

[A]: 2WD model
[B]: 4WD model

2) Remount the engine with transmission.

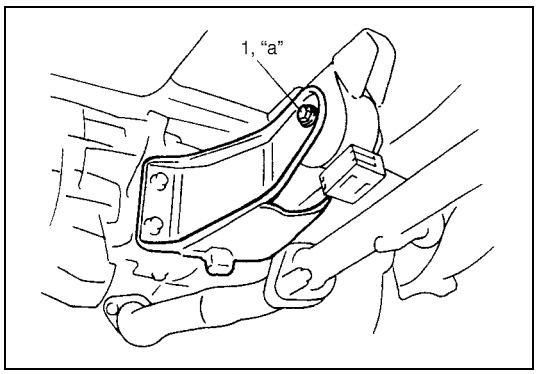

- 2WD model

a) Install engine rear mounting bolt (1).

Tightening torque
Engine rear mounting bolt (a): 55 N·m (5.5 kg-m, 40 lb-ft)

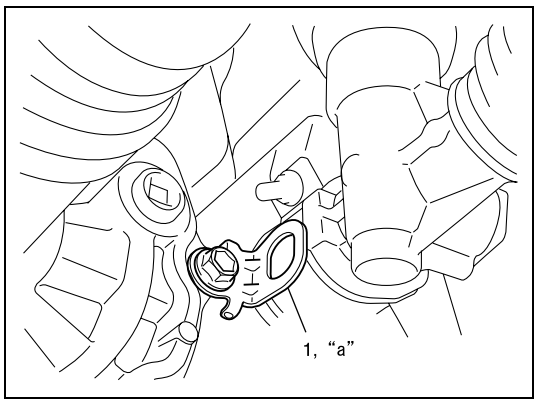

- 4WD model

a) Install bracket (1).

Tightening torque
Transmission bracket bolt
(a): 18.5 N·m (1.85 kg-m, 13.3 lb-ft)

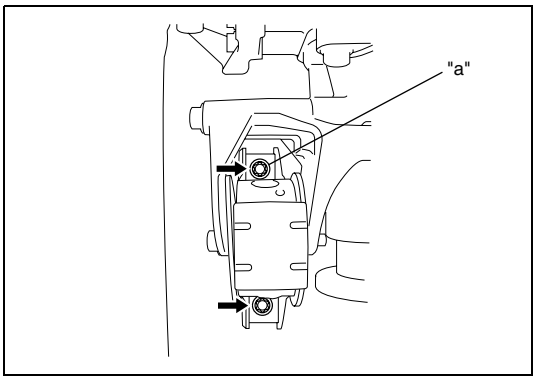

b) Install engine rear mount bracket.

Tightening torque
Engine rear mount bracket bolt
(a): 55 N·m (5.5 kg-m, 40 lb-ft)

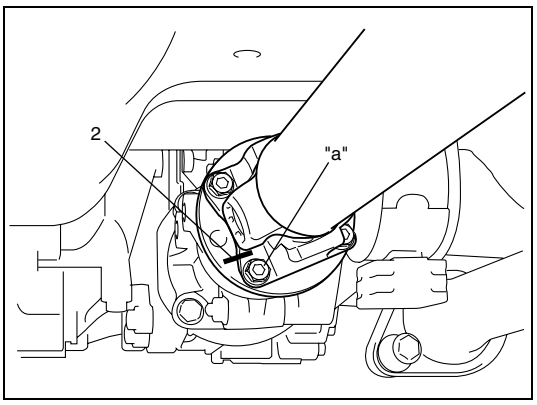

c) Install propeller shaft to joint flange aligning match marks (2) and tighten flange bolts to specified torque.

Tightening torque
Propeller shaft joint bolt (a): 23 N·m (2.3 kg-m, 16.6 lb-ft)

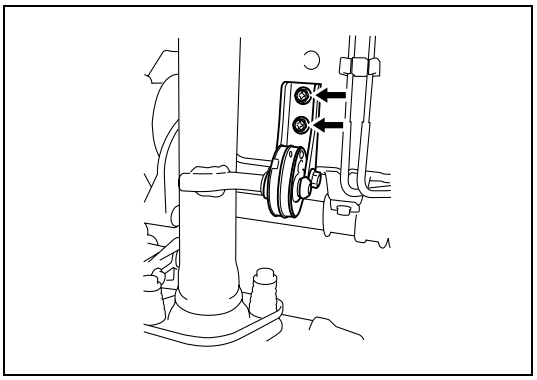

d) Install exhaust pipe bracket.

3) Remove transmission jack.

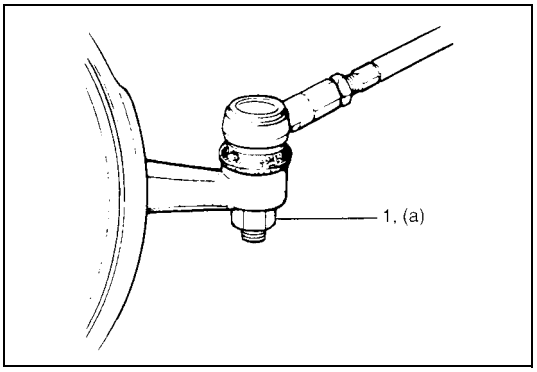

4) Install tie rod ends to knuckles (right & left). Tighten each new tie rod end nut (1) to specified torque.

Tightening torque
Tie rod end nut (a): 40 N·m (4.0 kg-m, 29.0 lb-ft)

5) Be sure that steering wheel and brake discs (right & left) are all straight-ahead position and then insert steering lower joint into steering pinion shaft.

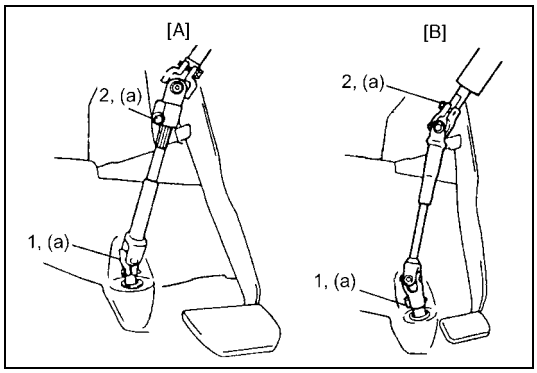

6) Tighten steering shaft joint bolts (1) and (2) to specified torque (Lower side first and then upper side).

Tightening torque
Steering shaft joint bolt (a): 28 N·m (2.8 kg-m, 20.5 lb-ft)

[A]:	Power steering
[B]:	Manual steering

7) Install both wheels and tighten wheel bolts to specified torque.

Tightening torque
Wheel bolt: 95 N·m (9.5 kg-m, 69.0 lb-ft)

8) Lower hoist.
9) Check toe setting. Adjust as required (refer to “Front Wheel Alignment Construction” in Section 3A).

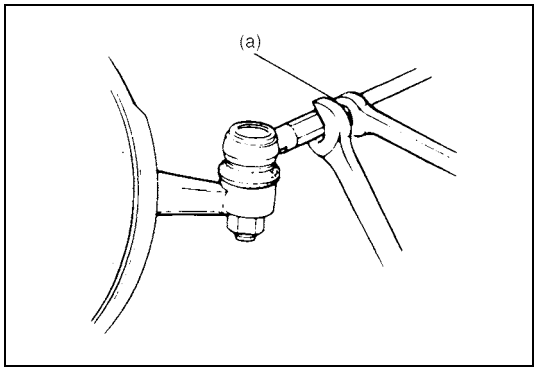

10) Tighten both tie rod end lock nuts to specified torque.

Tightening torque
Tie rod end lock nut (a): 45 N·m (4.5 kg-m, 32.5 lb-ft)

Unit Repair

Rack Boot / Tie Rod Removal and Installation

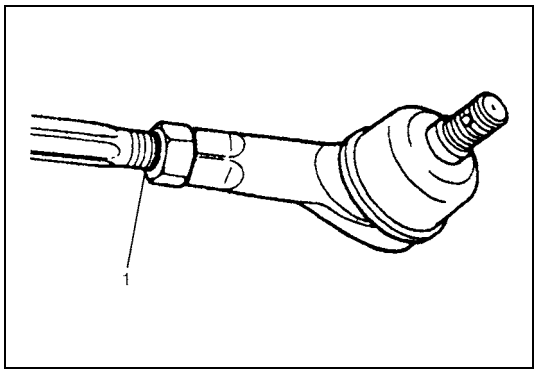

REMOVAL

1) Remove steering gear case referring to “Steering Gear Case Removal and Installation” in this section.
2) For ease of adjustment after installation, make marking (1) of tie rod end lock nut position of tie rod end thread.
3) Loosen tie rod end lock nut and remove tie rod end.

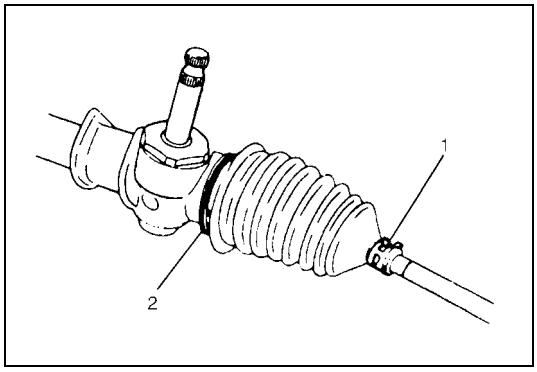

4) Remove boot band (2) and clip (1).
5) Remove boot from tie rod.

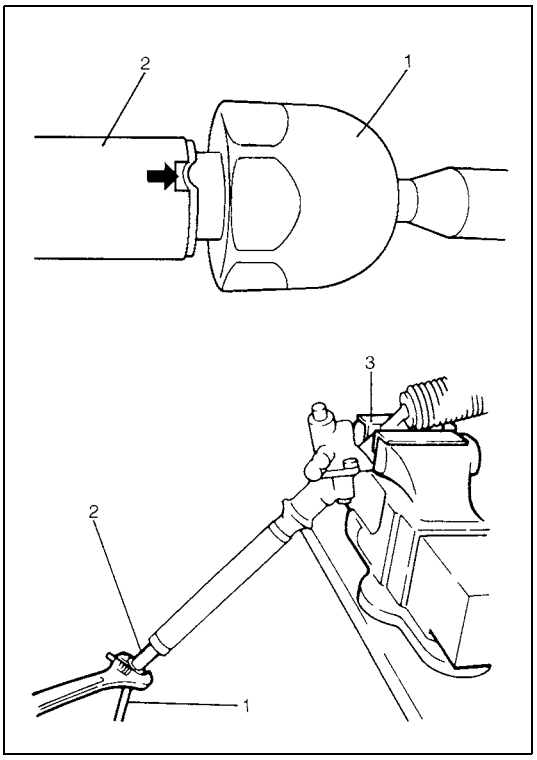

6) Unbend bent part of tie rod (1).
7) Hold rack with soft jawed vise (3) and remove tie rod from rack (2).

INSTALLATION

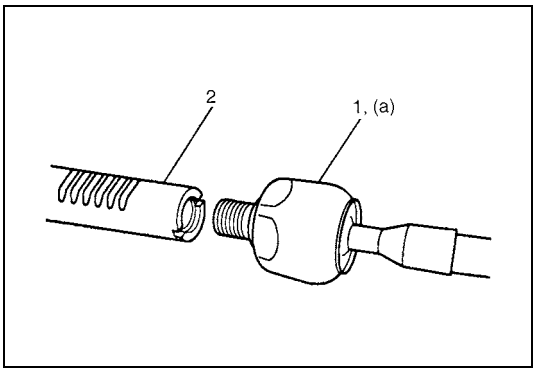

1) Install new tie rod (1) to rack (2).
2) Hold rack with soft jawed vise and tighten tie rod to specifiedtorque.

Tightening torque
Tie rod (a): 85 N·m (8.5 kg-m, 61.5 lb-ft)

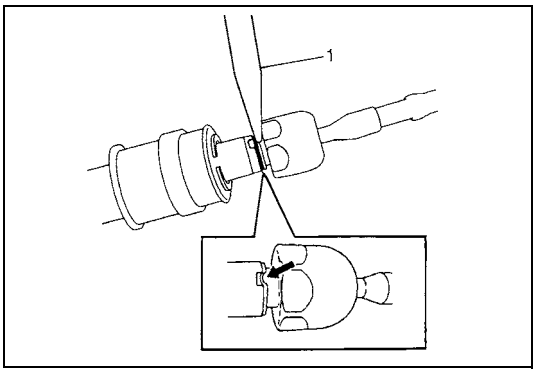

3) Caulk a part of tie rod indicated in figure with punch (1).

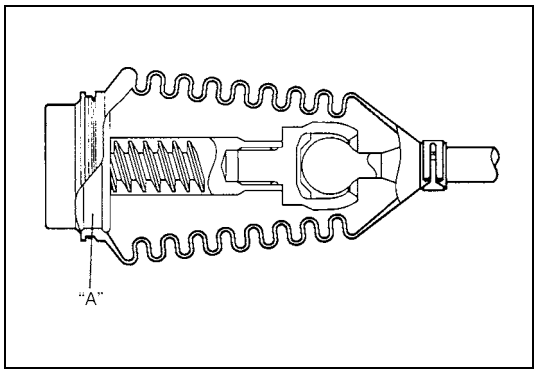

4) Apply sealant to gear case groove "A" indicated in figure.

"A": Sealant, 99000-31120

Position boot properly in grooves of gear case (or rack side mount) and tie rod.
After this, check to ensure that boot is free from twist and dent.

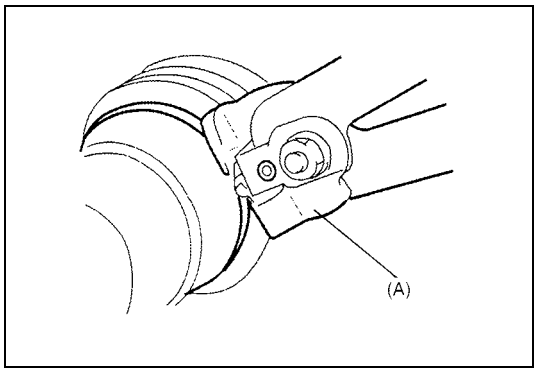

5) Fasten boot with new band and clip securely.

Special tool
(A): 09943-55010

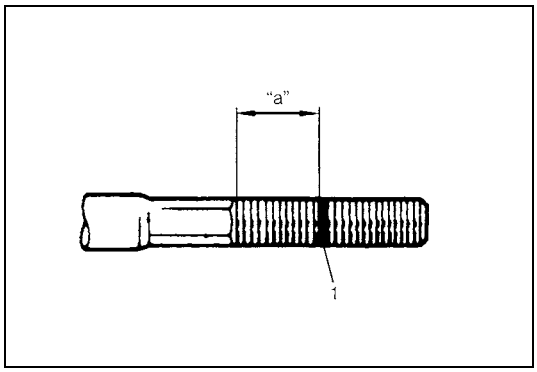

6) Install tie rod end lock nut and tie rod end to tie rod.
Position lock nut to marking (1) made in removal.

NOTE:

When tie rod was replaced, measure length "a" on removed tie rod and use it on new replacement tie rod so as to position lock nut properly.

7) Remount steering gear case referring to "Steering Gear Case Removal and Installation".

Steering Rack Plunger Removal and Installation

REMOVAL

1) Remove rack boots and tie rods referring to "Rack Boot / Tie Rod Removal and Installation".

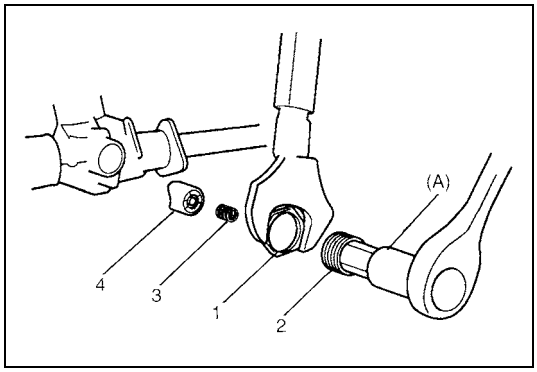

2) Loosen lock nut (1) with holding damper screw (2) with special tool.

Special tool
(A): 09944-28320

3) Remove lock nut (1), rack damper screw (2), rack plunger spring (3) and rack plunger (4).

INSTALLATION

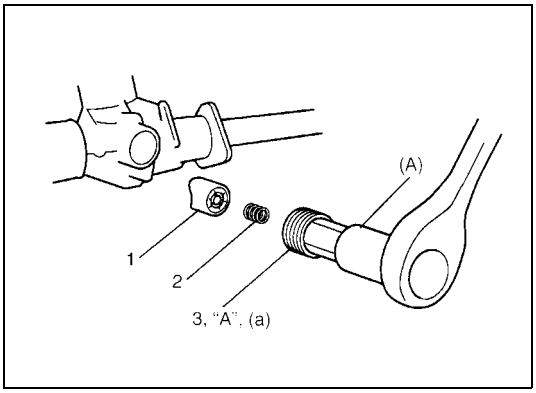

1) Apply grease lightly to sliding part of plunger (1) against rack.
2) Install plunger and spring (2) as shown.
3) Apply sealant to all around thread part of rack damper screw (3) and tighten it to specified torque with special tool.

Special tool
(A): 09944-28320
"A": Sealant 1207F, 99000-31250
Tightening torque
Rack damper screw
(a): 7 – 12 N·m (0.7 – 1.2 kg-m, 5.5 – 8.5 lb-ft)

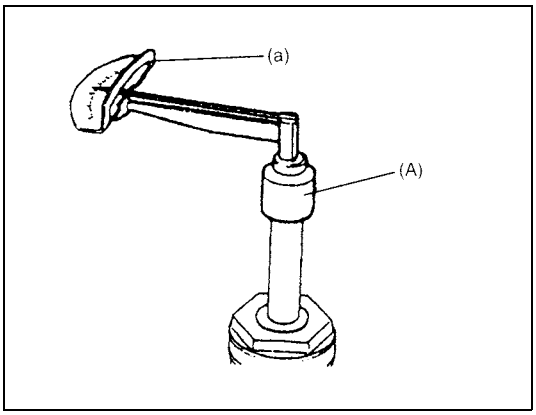

4) After tightening rack damper screw to specified torque, turn it back by 30° – 60° so that rotation torque becomes as specified below.
Pinion rotation torque should be checked with rack position centered.

Special tool
(A): 09944-18310

Rotation Torquer of pinion
(a): 0.5 – 1.2 N·m (0.05 – 0.12 kg-m, 0.36 – 0.87 lb-ft)

Also, check if rack as a whole moves smoothly.

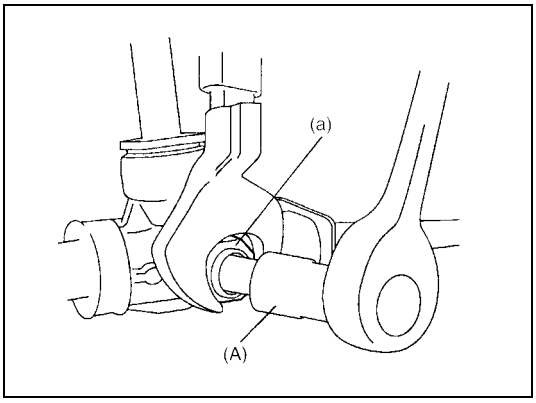

5) After adjustment, tighten lock nut to specified torque with holding damper screw at the position.

Special tool
(A): 09944-28320

Tightening torque
Rack damper screw lock nut
(a): 60 N·m (6.0 kg-m, 43.5 lb-ft)

Steering Rack Plunger Inspection

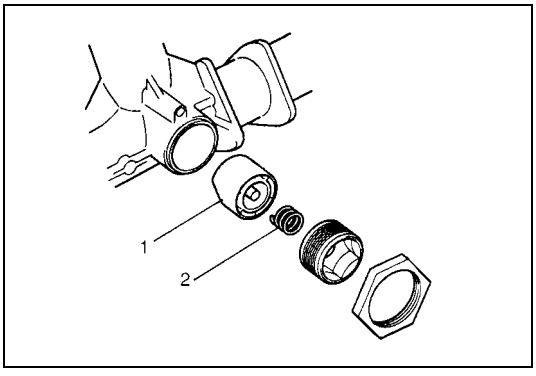

- Inspect rack plunger (1) for wear or damage.
- Inspect rack plunger spring (2) for deterioration.
In either case, if found defective, replace.

Steering Pinion Removal and Installation

REMOVAL

1) Remove rack plunger referring to “Steering Rack Plunger Removal and Installation”.

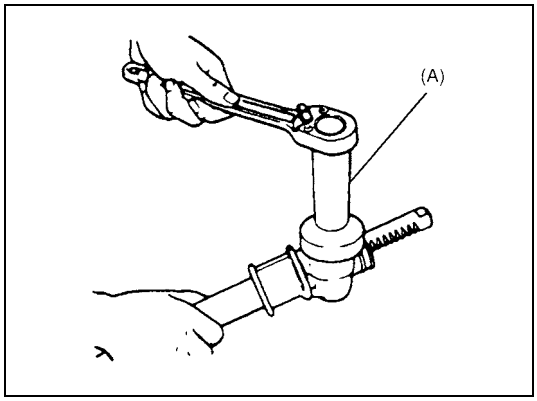

2) Remove bearing plug with special tool.

Special tool
(A): 09944-28310

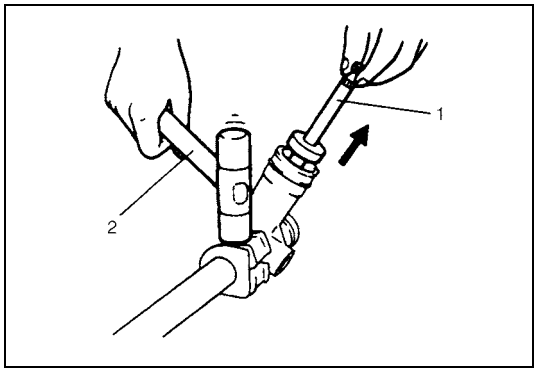

3) Tap on position as shown with plastic hammer (2) to separate pinion assembly (1) from housing, and remove pinion assembly (1).

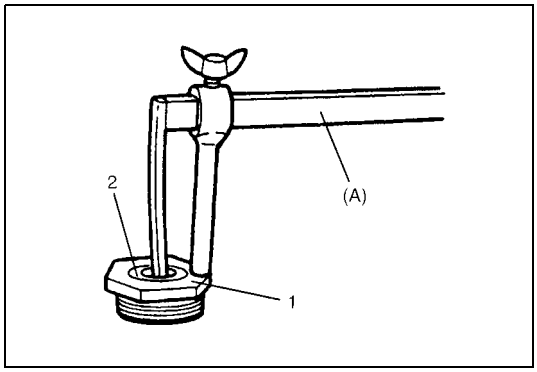

4) Remove oil seal (2) with special tool from pinion bearing plug (1).

Special tool
(A): 09913-50121

INSTALLATION

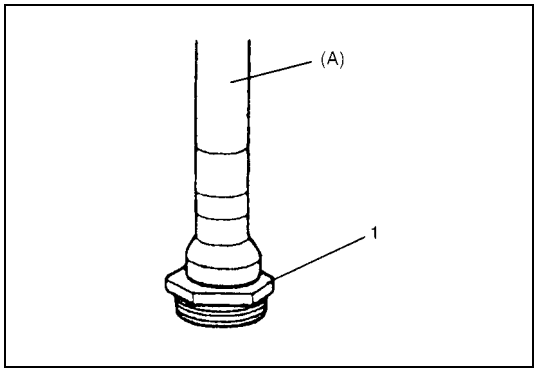

1) Install new oil seal with special tool to pinion bearing plug (1).

Special tool
(A): 09925-98210

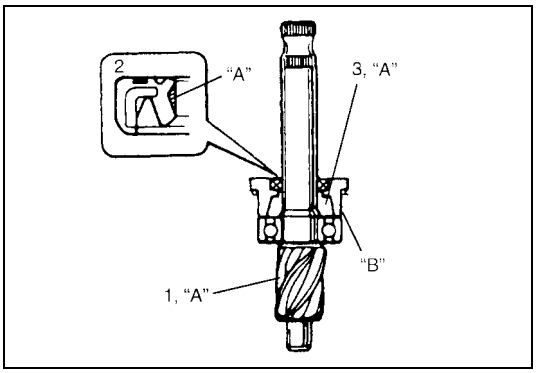

2) Apply grease to all around pinion teeth (1), pinion needle bearing, gear case, O-ring and gear case oil seal lip (2). Fill inside of pinion bearing plug (3) with grease.

"A": Grease E, 99000-25050

3) Apply thread lock cement to pinion bearing plug thread. Install pinion assembly to steering gear case.

"B": Thread lock cement 1342, 99000-32050

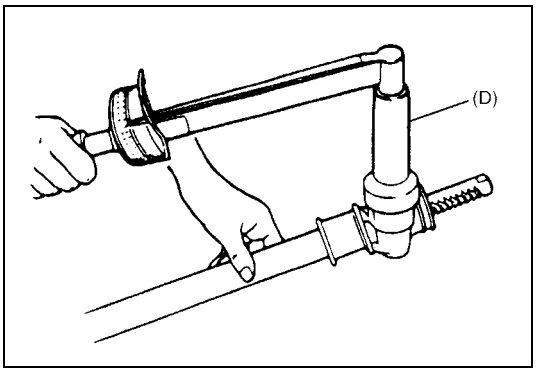

4) Tighten pinion bearing plug to specified torque.

Tightening torque
Pinion bearing plug: 60 N·m (6.0 kg-m, 43.5 lb-ft)

Special tool
(D): 09944-28310

5) Install rack plunger referring to "Steering Rack Plunger Removal and Installation" in this section.

Steering Pinion Inspection

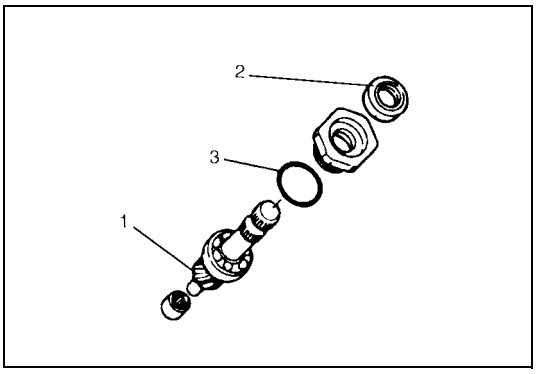

- Inspect pinion teeth surface (1) for wear or damage.
- Inspect oil seal (2) for damage.
- Inspect O-ring (3) for damage.
- Check rotation condition of bearing and inspect for wear. If found defective, replace.

Steering Rack Removal and Installation

REMOVAL

1) Remove steering gear case.

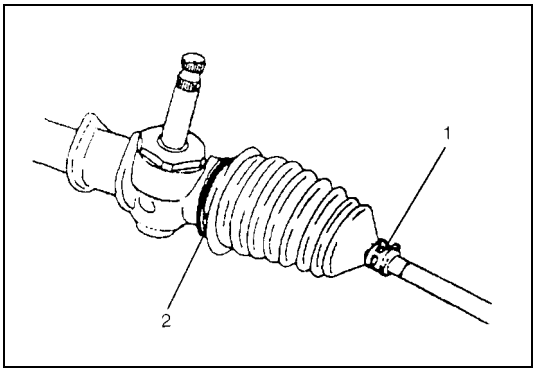

2) Remove boot bands (2) and clips (1).
3) Move both boots toward tie rod end.

4) Remove tie rods (right and left) from steering rack referring to "Rack Boot / Tie Rod Removal and Installation" in this section.
5) Mark left and right tie rods accordingly.

6) Remove rack plunger and pinion assembly from gear case referring to “Steering Pinion Removal and Installation” in this section.

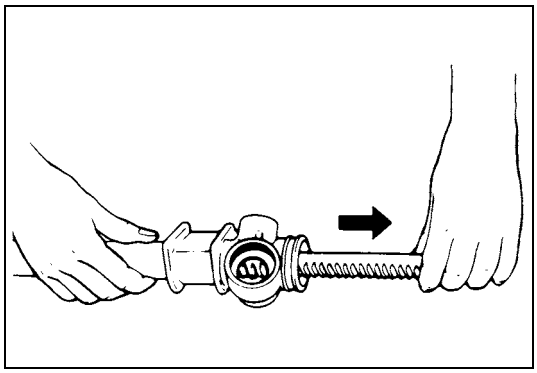

7) Remove rack from gear case. Direction for rack removal is as shown.

CAUTION:
Inside of steering rack bushing is coated with special coating. As it is damageable, be very careful not to cause damage to it when removing rack from steering gear case.

INSTALLATION

1) Apply grease to entire teeth surface of rack and its periphery.

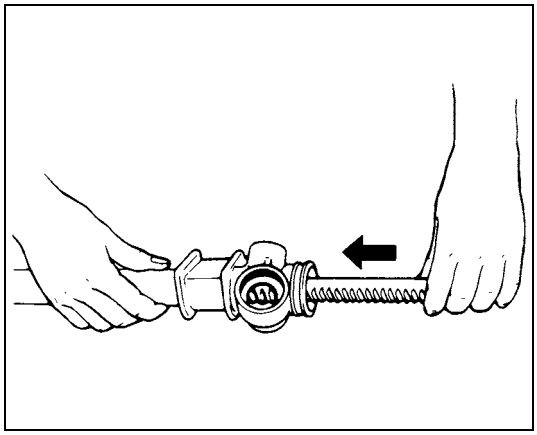

2) Slide rack into steering gear case in the direction as shown.

CAUTION:
Inside of steering rack bushing is coated with special coating. As it is damageable, be very careful not to cause damage to it when inserting rack into steering gear case.

3) Install pinion assembly to gear case referring to “Steering Pinion Removal and Installation” in this section.
4) Install Steering Rack Plunger referring to “Steering Rack Plunger Removal and Installation” in this section.

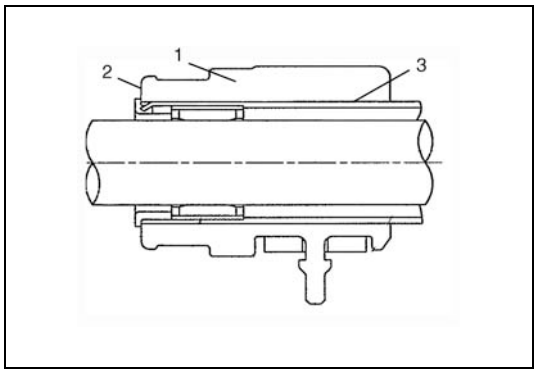

5) Before installing boot to steering rack housing (3), position rack side mount (1) so that its end (2) is flush with housing end. Install tie rods to rack referring to “Rack Boot / Tie Rod Removal and Installation” in this section.

Steering Rack Inspection

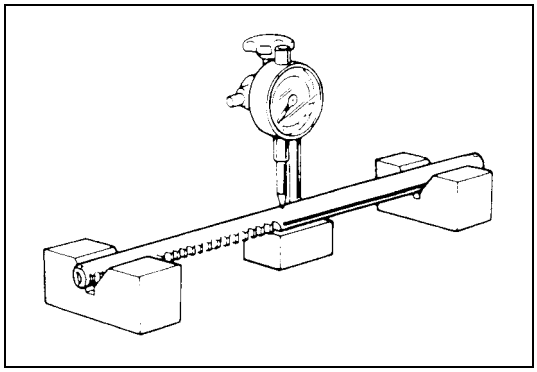

Inspect for deflection, teeth wear, or damage, back surface wear or damage.

CAUTION:
Do not use a wire brush when cleaning.

Limit of rack deflection
: 0.4 mm (0.016 in.)

If deflection exceeds limit, replace rack.

Pinion Bearing Removal and Installation

REMOVAL

1) Remove rack from steering gear case referring to “Steering Rack Removal and Installation” in this section.

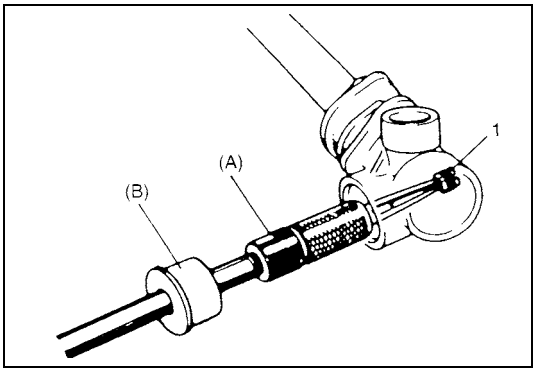

2) Remove pinion bearing (1) from gear case with special tools as shown.

Special tool
(A): 09921-20200
(B): 09930-30104

INSTALLATION

1) Apply grease to rollers of pinion bearing.

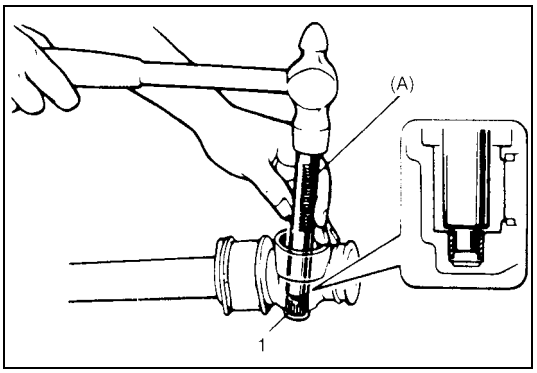

2) Press-fit pinion bearing (1) into gear case with special tool as shown.
After press-fitting, make sure that bearing rollers are installed properly.

Special tool
(A): 09943-88211

3) Install rack referring to “Steering Rack Removal and Installation” in this section to complete installation.

Required Service Material

Material	Recommended SUZUKI product (Part Number)	Use
Lithium Grease (Should be applicable for –40 C° – 130 °C or –40 °F – 266 °F)	SUZUKI SUPER GREASE (E) (99000-25050)	• Sliding part of rack against steering housing (All around rack plunger and rack) • Sliding part against steering pinion (Oil seal lip, needle bearing) • Steering rack and pinion gear teeth • Rack end ball joint
Lock cement	THREAD LOCK CEMENT 1342 (99000-32050)	• Pinion bearing plug thread
Sealant	SUZUKI BOND NO. 1207F (99000-31250)	• All around thread part of rack damper screw
Silicon sealant	SUZUKI SILICONE SEAL (99000-31120)	• Contacting parts of gear case groove and pinion side boot

Special Tool

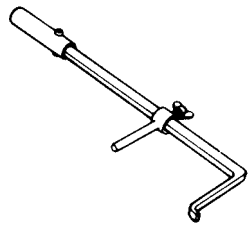 09913-50121 Oil seal remover	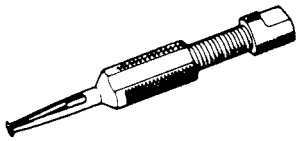 09921-20200 Pinion bearing remover	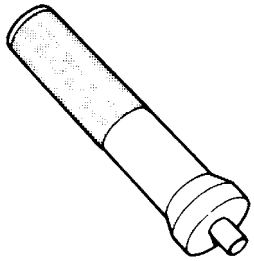 09925-98210 Bearing installer	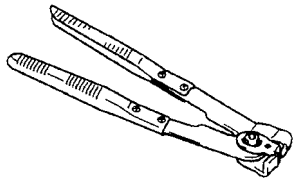 09943-55010 (J-22610) Boot clamp plier
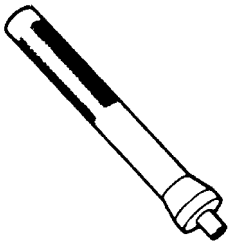 09943-88211 Pinion bearing installer	 09944-18310 Pinion torque checking socket	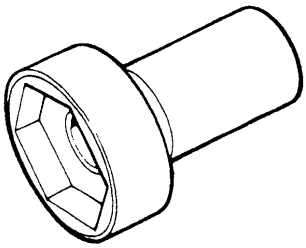 09944-28310 42 mm Socket (Pinion bearing plug socket)	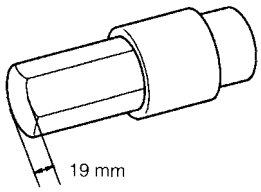 09944-28320 Hexagon bit (19 mm)
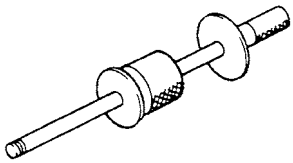 09930-30104 Sliding hummer			

SECTION 3B1

ELECTRICAL POWER STEERING (P/S) SYSTEM

WARNING:

For vehicles equipped with a Supplemental Restraint (Air Bag) System :

- **Service on and around the air bag system components or wiring must be performed only by an authorized SUZUKI dealer. Refer to "System Components and Wiring Location View" under "General Description" in Section 10B in order to confirm whether you are performing service on or near the air bag system components or wiring. Please observe all WARNINGS and "Service Precautions" under "On-Vehicle Service" in Section 10B before performing service on or around the air bag system components or wiring. Failure to follow WARNINGS could result in unintentional activation of the system or could render the system inoperative. Either of these two conditions may result in severe injury.**
- **Technical service work must be started at least 90 seconds after the ignition switch is turned to the "LOCK" position and the negative cable is disconnected from the battery. Otherwise, the system may be activated by reserve energy in the Sensing and Diagnostic Module (SDM).**

CONTENTS

General Description 3B1-2
- P/S System Construction 3B1-2
- EPS System Wiring Circuit Diagram 3B1-3

Diagnosis 3B1-4
- On-Board Diagnostic System Description 3B1-4
- Precautions in Diagnosing Troubles 3B1-4
- EPS System Check 3B1-5
- "EPS" Warning Lamp Check 3B1-7
- DTC Check 3B1-7
- DTC Clearance 3B1-7
- Serial Data Link Circuit Check 3B1-8
- DTC Table 3B1-10
- Scan Tool Data 3B1-10
  - Scan tool data definitions 3B1-11
- "EPS" Warning Lamp Does Not Come ON at Ignition Switch ON But Leaving Engine OFF 3B1-13
- "EPS" Warning Lamp Come ON at Ignition Switch ON But Leaving Engine OFF 3B1-15
- DTC C1111 Torque Sensor Main Circuit Failure 3B1-16
- DTC C1113 Torque Sensor Main and Sub Circuit Failure 3B1-16
- DTC C1115 Torque Sensor Sub Circuit Failure 3B1-16
- DTC C1114 Torque Sensor 5 V Power Supply Circuit Failure 3B1-17
- DTC C1121/C1123/C1124 VSS Circuit Failure 3B1-19
- DTC C1122 Engine Speed Signal Circuit Failure 3B1-21
- DTC C1141/C1142/C1143/C1144/ C1145 Motor Circuit Failure 3B1-22
- DTC C1151 Clutch Circuit Failure 3B1-24
- DTC C1153 P/S Control Module Power Supply Circuit Failure 3B1-26
- DTC C1152/C1154/C1155 P/S Control Module Failure 3B1-26
- Trouble Diagnosis (For Trouble Not Indicated by On-Board Diagnostic System) 3B1-27
- Inspection of P/S Control Module and Its Circuits 3B1-28
- Steering Wheel Play Check 3B1-30
- Steering Force Check 3B1-30

On-Vehicle Service 3B1-31
- Steering Column Removal and Installation 3B1-31
- Checking Steering Column Check After Accident Damage 3B1-31
- P/S Control Module Removal and Installation 3B1-31
- Torque Sensor On-Vehicle Inspection 3B1-32
- Motor Assembly (with Clutch Incorporated) On-Vehicle Inspection 3B1-32

Special Tool 3B1-33

General Description

P/S System Construction

This power steering (P/S) system consists of a P/S control module, a torque sensor, a motor and a clutch installed to the steering column. In this system, the P/S control module determines the level and direction of the assist force for the steering wheel according to the signals from the torque sensor and the vehicle speed sensor (VSS). The P/S control module runs the motor so as to assist the operation of the steering wheel.

The P/S control module diagnoses troubles which may occur in the area including the following components when the ignition switch is ON and the engine is running. When the P/S control module detects any malfunction, it stops the motor and clutch operation.

- Torque sensor
- Vehicle speed sensor (VSS) circuit
- Engine speed signal circuit
- Motor
- Clutch
- P/S control module

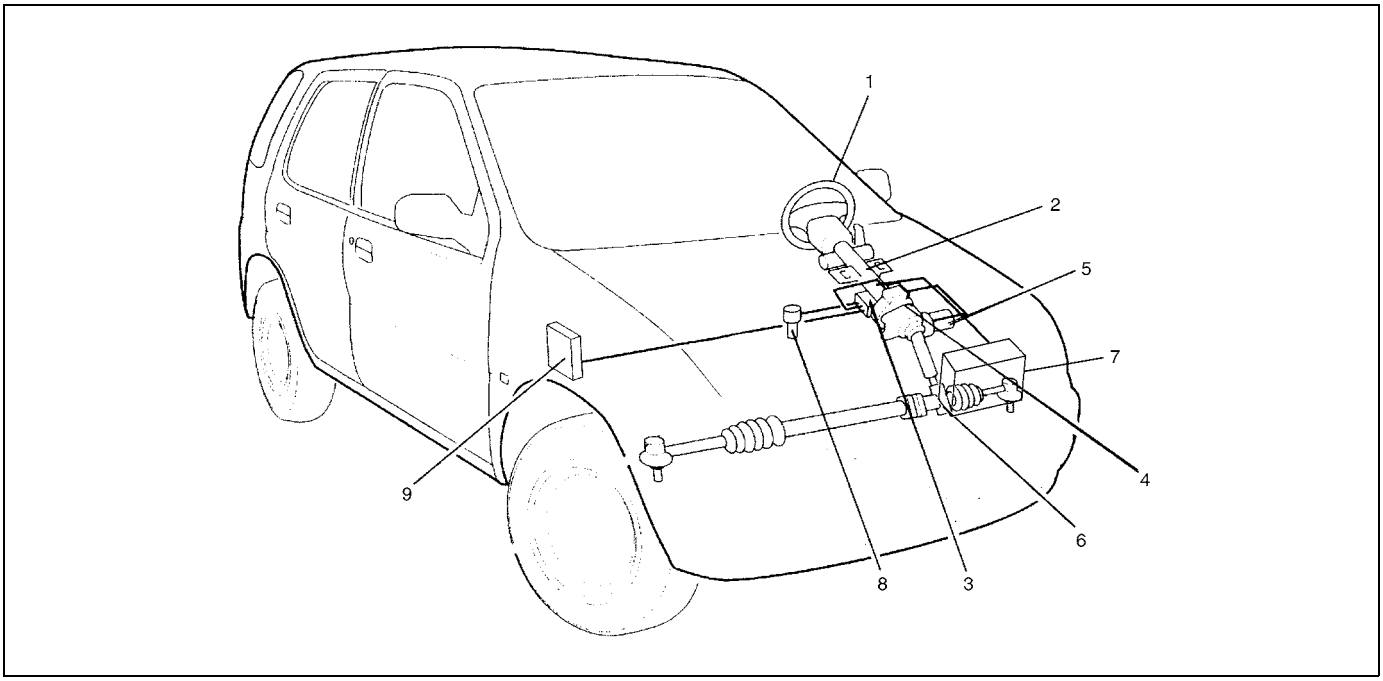

1. Steering wheel	4. Torque sensor	7. Battery
2. Steering column assembly	5. Motor and clutch	8. Vehicle speed sensor (VSS)
3. P/S control module	6. Steering gear box	9. ECM

NOTE:

For vehicle with a right-hand steering wheel, position of each component is symmetrical.

EPS System Wiring Circuit Diagram

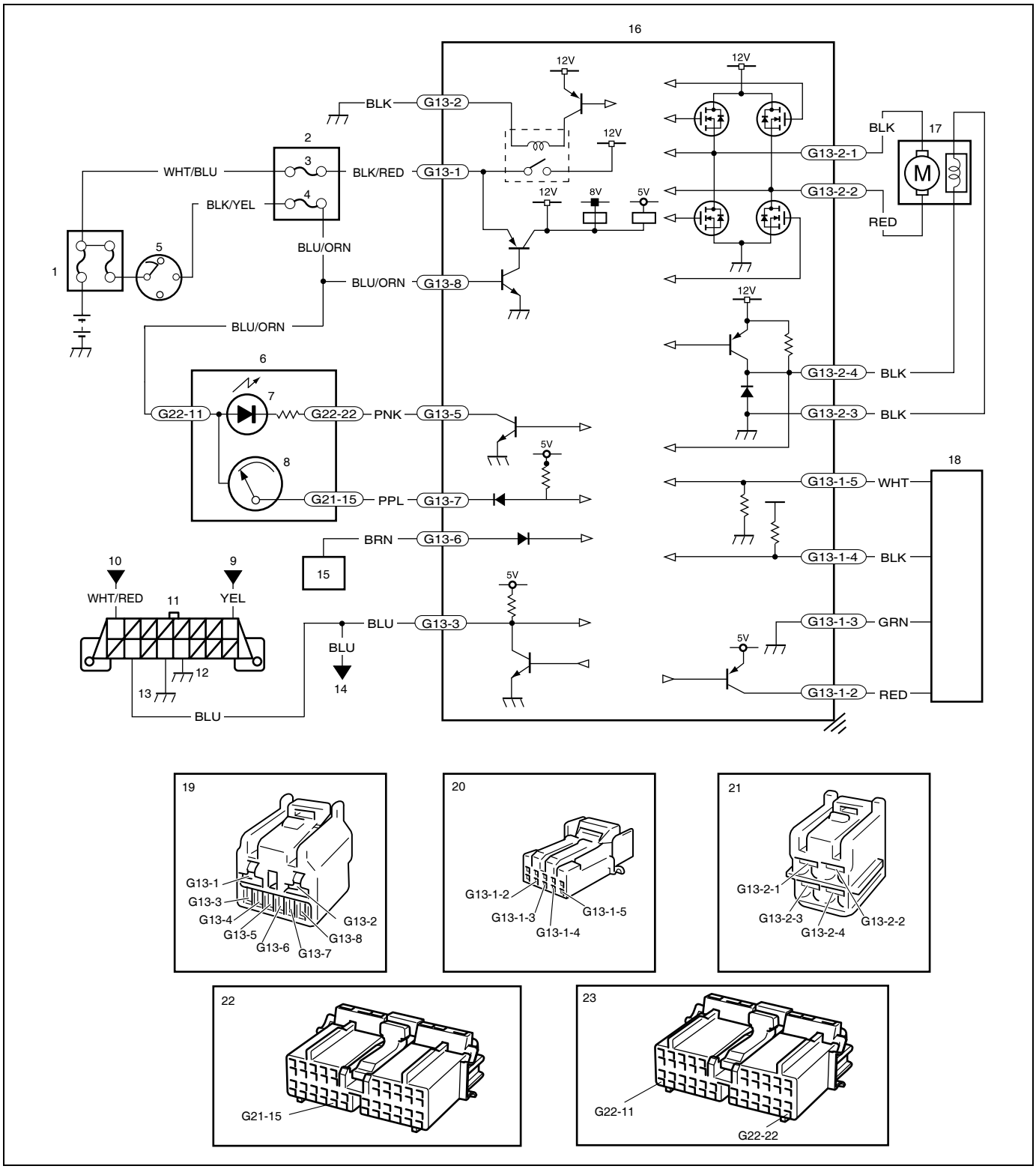

1. Main fuse box	9. From immobilizer control module	17. Motor assembly (with clutch incorporated)
2. Circuit fuse box	10. From circuit fuse box	18. Torque sensor
3. “P/S” fuse (30 A)	11. Data link connector (DLC)	19. Connector G13 (viewed from terminal side)
4. “METER” fuse (10 A)	12. Ground on engine block	20. Connector G13-1 (viewed from terminal side)
5. Ignition switch	13. Ground on body	21. Connector G13-2 (viewed from terminal side)
6. Combination meter	14. To ECM, Air bog SDM and ABS hydraulic unit/control module assembly (if equipped)	22. Connector G21 (viewed from terminal side)
7. “EPS” warning lamp	15. ECM	23. Connector G22 (viewed from terminal side)
8. Speedometer	16. P/S control module	

Diagnosis

The P/S system in this vehicle is controlled by the P/S control module. The P/S control module has an on-board diagnostic system which detects a malfunction in this system. When diagnosing troubles, be sure to have full understanding of the outline of “On-Board Diagnostic System Description” and each item in “Precaution in Diagnosing Troubles”, and then execute diagnosis according to “EPS System Check”.

On-Board Diagnostic System Description

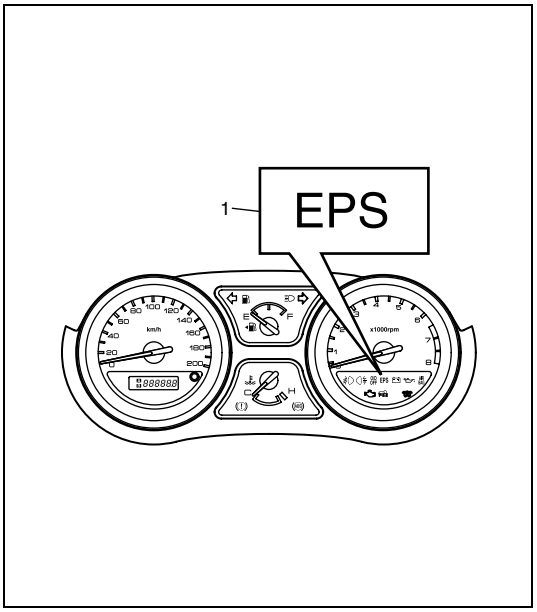

The P/S control module performs the on-board diagnosis (self-diagnosis) on the system and operates the “EPS” warning lamp (1) as follows.

- The “EPS” warning lamp lights when the ignition switch is turned to ON position (but the engine at stop) regardless of the condition of the P/S control system. This is only to check if the “EPS” warning lamp is operated properly.
- If the areas monitored by the P/S control module is free from any trouble after the engine start (while engine is running), the “EPS” warning lamp turns OFF.
- When the P/S control module detects a trouble which has occurred in the monitored areas the “EPS” warning lamp flashes ON and OFF while the engine is running to warn the driver of such occurrence of the trouble and at the same time it stores the exact trouble area in memory inside of the P/S control module.

Precautions in Diagnosing Troubles

- Take a note of DTC (diagnostic trouble code) indicated on the Suzuki Scan Tool.
- Before inspection, be sure to read “Precautions for Electrical Circuit Service” in Section 0A and understand what is written there.
- DTC C1122 (engine speed signal failure) is indicated when ignition switch is at ON position and engine is not running, but it means there is nothing abnormal if indication changes to a normal one when engine is started.
- As DTC is stored in memory of the P/S control module, be sure to clear memory after repair by performing the procedure described in “DTC Clearance”.

EPS System Check

Step	Action	Yes	No
1	1) Record details of the problem. For your record, use of a questionnaire form as shown will facilitate collecting information for proper analysis and diagnosis. 2) Check if the problem described in “CUSTOMER QUESTIONNAIRE” actually occurs in the vehicle. (This step should be performed with the customer if possible.) 3) Check for operation of the “EPS” warning lamp referring to ““EPS” Warning Lamp Check”. 4) Check for DTC referring to “DTC Check” in this section, and then record DTC(s). 5) Clear DTC if any DTC exists referring to “DTC Clearance” in this section, and then recheck for DTC. Is any DTC still detected?	Go to Step 2.	Go to Step 3.
2	1) Inspect and repair referring to applicable “DTC Table” in this section. 2) Clear DTC referring to “DTC Clearance” in this section. Does the trouble recur?	Go to Step 5.	Go to Step 4.
3	1) Test drive the vehicle and turn the steering wheel fully to the right and left during the test drive. Check if any trouble exists. See WARNING. 2) Inspect and repair basic parts referring to “Diagnosis Table” in Section 3. 3) If the trouble cannot be repaired in Step 3-2), inspect and repair referring to “Trouble Diagnosis (For Trouble Not Indicated by On-Board Diagnostic System)” in this section. Does the trouble recur?	Go to Step 5.	Go to Step 4.
4	1) Confirm if the problem is solved and the P/S system is free from any abnormal conditions. If what has been repaired is related to the DTC, clear the DTC once and perform the test drive in Step 3-1), and then confirm that no DTC is indicated. Is any malfunction DTC detected?	Go to Step 5.	END
5	1) Check for DTC referring to “DTC Check” in this section. Is any DTC detected?	Go to Step 2.	Go to Step 3.

WARNING:
Carry out test drive in light traffic area to prevent an accident.

NOTE:

- **As execution of “DTC Clearance” will clear all DTCs, be sure to record all DTCs before service.**
- **DTC C1122 is indicated when ignition switch is at ON position and engine is not running, it means that nothing is abnormal.**
- **Current DTC and history DTC can be identified by condition of the “EPS” warning lamp. “EPS” warning lamp operates as follows.**

	Current DTC is set. (Abnormality exists at present.)	**Only history DTC is set. (Faulty condition occurred once in the past, but normal condition is detected at present.)**	**Current and history DTC exist.**
"EPS" warning lamp after engine started	Remains ON.	Turns OFF.	Remains ON.

CUSTOMER QUESTIONNAIRE (EXAMPLE)

Customer's name:	Model:	VIN:	
Date of issue:	Date Reg.	Date of problem:	Mileage:

Problem Symptoms	• Steering wheel feels heavy • Vehicle pulls to one side during straight driving • Poor recovery from turns • Too much play in steering • Abnormal noise while vehicle is running: from motor, from rack and pinon, other_____ • Other_____
Frequency of Occurrence	• Continuous/Intermittent (times a day, a month)/ other_____
Conditions for Occurrence of Problem	• Vehicle at stop & ignition switch ON: • When starting: at initial start only/at every start/Other_____ • Vehicle speed: while: while accelerating/while decelerating/at stop/ while turning/while running at constant speed/ other_____ • Road surface condition: Paved road/rough road/snow-covered road/other_____ • Chain equipment:
Environmental Condition	• Weather: fair/cloudy/rain/snow/other_____ • Temperature: °F (°C)
DTC	• First check: Normal code/malfunction code ( ) • Second check after driving test: Normal code/malfunction code ( )

"EPS" Warning Lamp Check

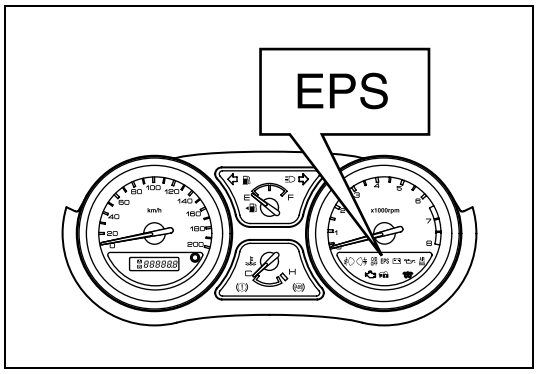

1) Turn ignition switch to ON position (but without running engine) and check if the "EPS" warning lamp lights up. If the lamp dose not light up, go to ""EPS" Warning Lamp Dose Not Come ON at Ignition Switch ON But Leaving Engine OFF" of the diagnostic flows.
2) Start engine and check if the "EPS" warning lamp turns OFF. If the lamp comes OFF, the P/S system is in good condition.

DTC Check

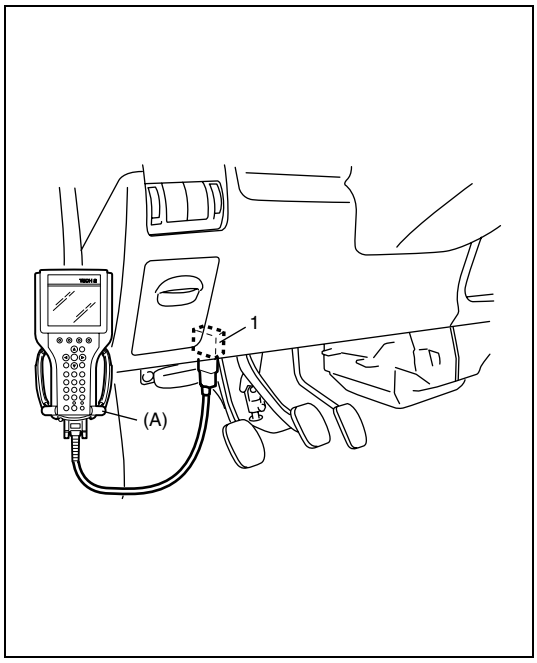

1) Turn ignition switch to OFF position.
2) Connect Suzuki Scan Tool to data link connector (DLC) (1) located on underside of instrument panel at driver's seat side.

Special tool
(A): Suzuki Scan Tool

3) Turn ignition switch to ON position.
4) Read DTC according to the instructions displayed on Suzuki Scan Tool. For further details, refer to operator's manual for Suzuki Scan Tool.

NOTE:

If communication between Suzuki Scan Tool and the vehicle can not be established, perform "Serial Data Link Circuit Check" described in this section.

5) After completing the check, turn ignition switch to OFF position and disconnect Suzuki Scan Tool from DLC.

DTC Clearance

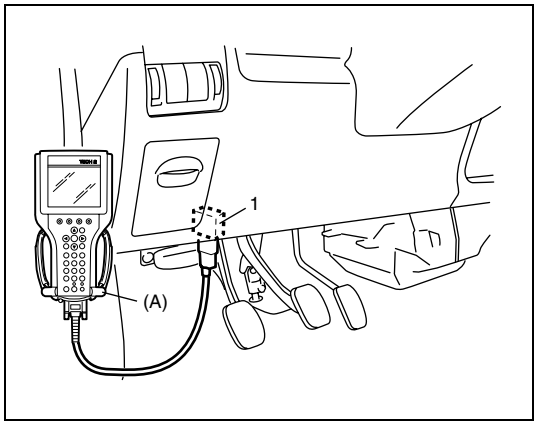

1) Turn ignition switch to OFF position.
2) Connect Suzuki Scan Tool to data link connector (DLC) (1) located on underside of instrument panel at driver's seat side.

Special tool
(A): Suzuki Scan Tool

3) Turn ignition switch to ON position.
4) Erase DTC according to the instructions displayed on Suzuki Scan Tool. For further details, refer to operator's manual for Suzuki Scan Tool.
5) After completing the clearance, turn ignition switch to OFF position and disconnect Suzuki Scan Tool from DLC.

Serial Data Link Circuit Check

CAUTION:
Be sure to perform "EPS System Check" before starting "DTC Troubleshooting".

WIRING DIAGRAM

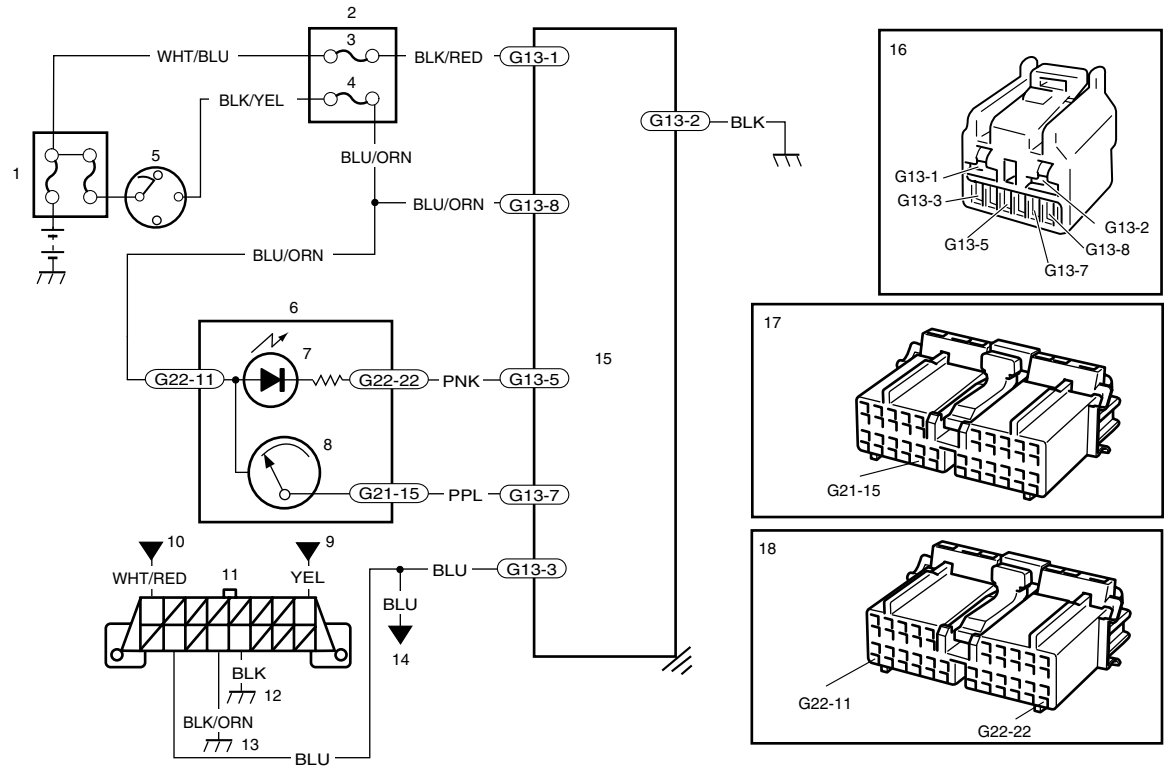

1. Main fuse box	7. "EPS" warning lamp	13. Ground on body
2. Circuit fuse box	8. Speedometer	14. To ECM, Air bag SDM and ABS hydraulic unit/control module assembly (if equipped)
3. "P/S" fuse (30 A)	9. From immobilizer control module	15. P/S control module
4. "METER" fuse (10 A)	10. From circuit fuse box	16. Connector G13 (viewed from terminal side)
5. Ignition switch	11. Data link connector (DLC)	17. Connector G21 (viewed from terminal side)
6. Combination meter	12. Ground on engine block	18. Connector G22 (viewed from terminal side)

TROUBLESHOOTING

Step	Action	Yes	No
1	Was "EPS System Check" performed?	Go to Step 2.	Go to "EPS System Check" in this section.
2	1) Make sure that Suzuki Scan Tool is free from malfunction and that correct program card (software) for P/S system is used. 2) Turn ignition switch to OFF position. 3) Check proper connection of Suzuki Scan Tool to DLC. Is connection in good condition?	Go to Step 3.	Connect Suzuki Scan Tool to DLC properly.

Step	Action	Yes	No
3	1) Check if communication is possible by making communication with other controllers (ECM, ABS hydraulic unit/control module assembly (if equipped) or SDM) or other vehicles. Is it possible to communicate with the other controllers?	Go to Step 4.	Repair open in common section of serial data circuit (“BLU” wire circuit) used by all controllers or short to ground or power circuit which has occurred somewhere in serial data circuit (“BLU” wire circuit).
4	1) With ignition switch at OFF position, disconnect G13-8 terminal from P/S control module. 2) Check proper connection at “G13-3” (“BLU” wire) terminal for serial data circuit. 3) If OK, then check resistance between “G13-3” (“BLU” wire) terminal and “BLU” wire terminal for serial data circuit in DLC. Is resistance 1 Ω or less?	Substitute a known-good P/S control module and recheck. If communication is possible, replace the original P/S control module with a known-good P/S control module.	Repair high resistance or open in “BLU” wire circuit for P/S system.

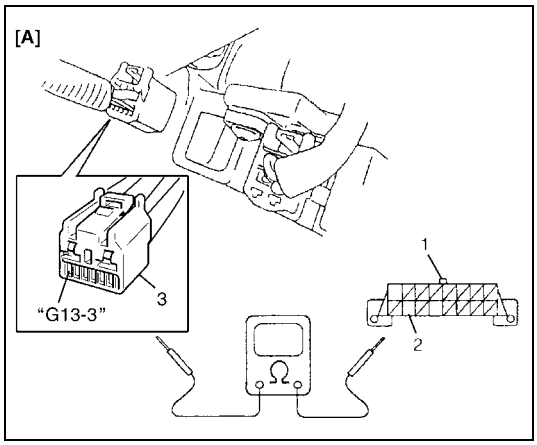

[A]: Fig. for Step 4
1. DLC
2. “BLU” wire terminal
3. Connector “G13” (viewed from terminal side)

DTC Table

CAUTION:
Be sure to perform the "EPS System Check" before starting troubleshooting corresponding to each DTC.

DTC (displayed on Suzuki Scan Tool)	Diagnosis	
No DTC	Normal	This is displayed on Suzuki Scan Tool when there is no problem with EPS system.
C1111	Torque sensor main circuit failure	Perform diagnosis corresponding to each DTC.
C1113	Torque sensor main and sub circuit failure	
C1114	Torque sensor 5 V power supply circuit failure	
C1115	Torque sensor sub circuit failure	
C1121	VSS circuit failure	
C1123		
C1124		
C1122	Engine speed signal circuit failure	
C1141	Motor circuit failure	
C1142		
C1143		
C1144		
C1145		
C1151	Clutch circuit failure	
C1152	P/S control module power supply circuit failure	
C1154		
C1155		
C1153	P/S control module power supply circuit failure	

Scan Tool Data

Scan Tool Data	Normal Condition
BATTERY VOLT	10 – 14 V
TQS POWER SUPPL	7.5 – 10 v
MOT POWER SUPPL	ON
MOTOR VOLT	1.5 – 2 V
TQS MAIN TORQUE	0 N·m
TQS SUB TORQUE	0 N·m
ASSIST TORQUE	0 N·m
MOTOR (CON)	0 A
MOTOR (MON)	0 A
CLUTCH (CON)	ON
CLUTCH (MON)	ON
VEHICLE SPEED	0 km/h 0 MPH
ENGINE SPEED	700 ± 50 rpm
IGNITION SWITCH	ON

Scan tool data definitions

BATTERY VOLT

Battery Voltage is an analog input signal read by the ECU.

TQS POWER SUPPL

This parameter indicates the power supply voltage which the EPS controller supplies to the torque sensor.

MOT POWER SUPPL

This parameter indicates the condition of the power supply to the motor.

MOTOR VOLT

This parameter indicates the voltage between motor terminals.

TQS MAIN TORQUE

The torque sensor is installed to detect the steering force and the steering direction. It consists of two potentiometers and the main torque sensor is one of these.

TQS SUB TORQUE

The torque sensor is installed to detect the steering force and the steering direction. It consists of two potentiometers and the sub-torque sensor is one of these. Its output characteristics are compared with those of the main torque sensor.

ASSIST TORQUE

This parameter is an internal parameter of the EPS controller. It is obtained by computing the torque sensor input signal.

MOTOR (CON)

Based on the input signal, the EPS controller determines the assist amount and controls the current to the motor suitable for that assist amount. This parameter indicates that control value.

MOTOR (MON)

This parameter indicates the actually measured value of the current flowing to the motor. The motor circuit condition is diagnosed by comparing this parameter with “MOTOR (CON)” parameter described previously.

CLUTCH (CON)

This parameter indicates whether the EPS controller controls the motor clutch or not.

CLUTCH (MON)

This parameter indicates the connection condition of the clutch from the clutch voltage monitored by the EPS controller.

VEHICLE SPEED

The AC voltage signal produced by the vehicle speed sensor (VSS) is divided and adjusted by the speedometer and thus the vehicle speed signal is obtained. The EPS controller determines the amount of power assist based on this vehicle speed signal and the torque sensor signal.

ENGINE SPEED

Engine speed signal is fed from the ECM so that it can be used for trouble diagnosis of the electric power steering system.

IGNITION SWITCH

This parameter indicates the condition of the power supply through the ignition switch.

"EPS" Warning Lamp Does Not Come ON at Ignition Switch ON But Leaving Engine OFF

WIRING DIAGRAM

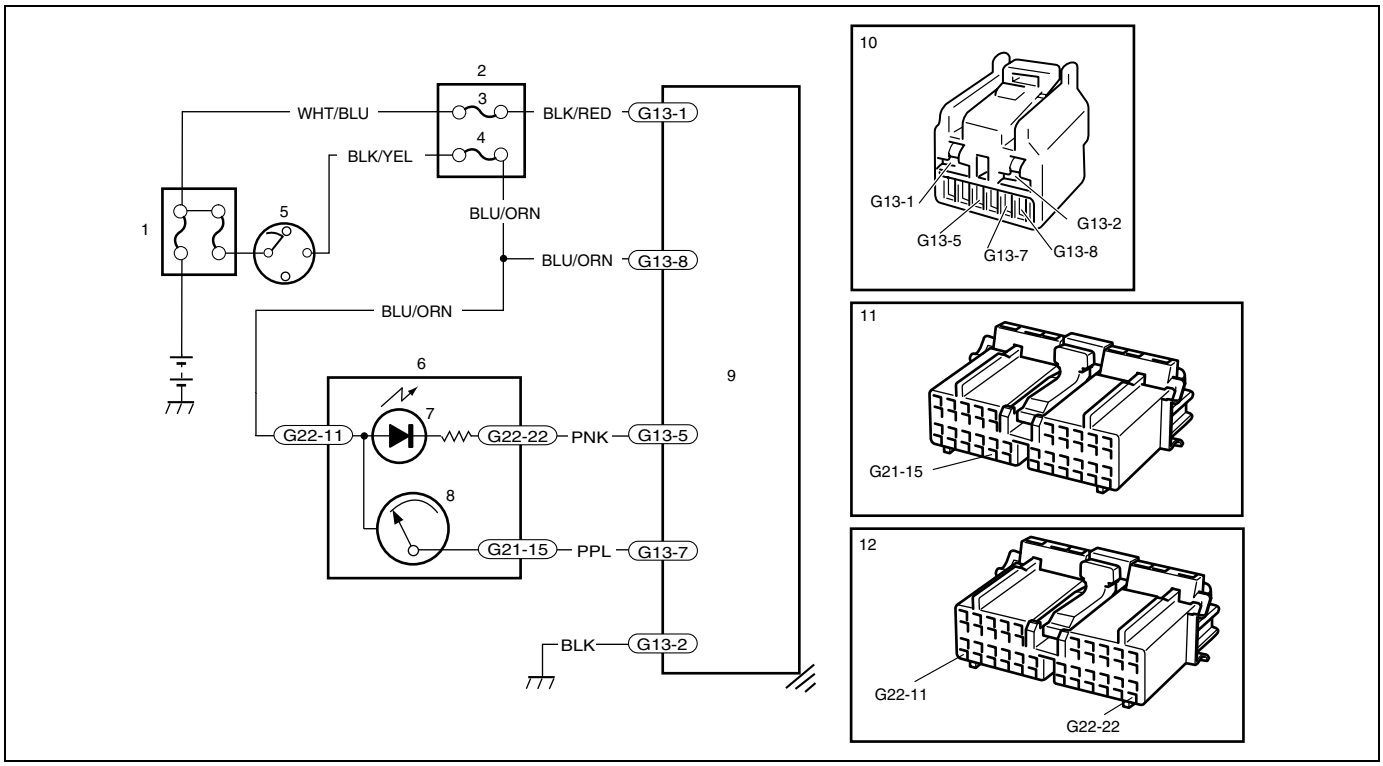

1. Main fuse box	5. Ignition switch	9. P/S control module
2. Circuit fuse box	6. Combination meter	10. Connector G13 (viewed from terminal side)
3. "P/S" fuse (30 A)	7. "EPS" warning lamp	11. Connector G21 (viewed from terminal side)
4. "METER" fuse (10 A)	8. Speedometer	12. Connector G22 (viewed from terminal side)

TROUBLESHOOTING

Step	Action	Yes	No
1	1) Turn ignition switch ON. Do the other warning lamps come on?	Go to Step 2.	"BLK/YEL", "BLU/ORN" wire circuit or "METER" fuse open or short to ground.
2	1) Ignition switch OFF. 2) Remove and inspect the "P/S" fuse. Is fuse in good condition?	Reinstall the "P/S" fuse, and then go to Step 3.	Check "BLK/RED" wire circuit for short to ground. If OK, replace the "P/S" fuse.
3	1) With ignition switch OFF, disconnect P/S control module connector ("G13"). 2) Check for proper connection to the P/S control module at "G13-2" terminal. 3) Measure resistance between "G13-2" ("BLK" wire) terminal and body ground. Is it infinite (∞)?	"BLK" wire circuit open.	Go to Step 4.

Step	Action	Yes	No
4	1) Check for proper connection to P/S control module at “G13-1” terminal. 2) If OK, check for voltage between “G13-1” (“BLK/RED” wire) terminal and body ground with ignition switch ON. Is it 10 – 14 V?	Go to Step 5.	“WHT/BLU” or “BLK/RED” wire circuit open or short to ground.
5	1) Check for proper connection to the P/S control module at “G13-8” terminal. 2) If OK, check voltage between “G13-8” (“BLU/ORN” wire) terminal and body ground with ignition switch ON. Is it 10 – 14 V?	Go to Step 6.	“BLU/ORN” wire circuit open or short to ground.
6	1) Remove combination meter and disconnect combination meter connector (“G22”) with ignition switch turned OFF. 2) Check for proper connection to the combination meter at “G22-11” terminal. 3) If OK, check voltage between “G22-11” (“BLU/ORN” wire) terminal and body ground with ignition switch ON. Is it 10 – 14 V?	Go to Step 7.	“BLU/ORN” wire circuit open or short to ground.
7	1) Check for proper connection to the combination meter at “G22-22” terminal and P/S control module at “G13-5” terminal. 2) Measure resistance between the combination meter at “G22-22” terminal and the P/S control module at “G13-5” terminal. Is it infinite (∞)?	“PNK” wire circuit open.	Connect combination meter connector (“G22”) with ignition switch turned OFF. Go to Step 8.
8	1) Check for voltage between “G13-5” (“PNK” wire) terminal and body ground with ignition switch ON. Is it 10 – 14 V?	Replace the P/S control module.	Replace the combination meter.

“EPS” Warning Lamp Come ON at Ignition Switch ON But Leaving Engine OFF

WIRING DIAGRAM

Refer to ““EPS” Warning Lamp Does Not Come ON at Ignition Switch ON But Leaving Engine OFF” in this section.

TROUBLESHOOTING

Step	Action	Yes	No
1	1) Perform diagnostic trouble code check. Is there any DTC (NO CODES on Suzuki Scan Tool) exists?	Go to Step 2.	Go to Step 3.
2	1) Does malfunction DTC exist at Step 1?	Go to Step 5 of “EPS System Check” in this section.	Go to Step 3.
3	1) With ignition switch OFF, disconnect P/S control module connector (“G13”). 2) Check for proper connection to the P/S control module at “G13-5” terminal. 3) If OK then ignition switch ON. Does EPS warning lamp turn on?	Connect P/S control module connector (“G13”) with ignition switch turned OFF. Go to Step 4.	Replace the P/S control module.
4	1) Remove combination meter and disconnect combination meter connector (“G22”). 2) Check for proper connection to combination meter at “G22-22” terminal. 3) If OK then ignition switch ON. Does EPS warning lamp turn on?	Replace the combination meter.	“PNK” wire circuit short to ground.

DTC C1111 Torque Sensor Main Circuit Failure
DTC C1113 Torque Sensor Main and Sub Circuit Failure
DTC C1115 Torque Sensor Sub Circuit Failure

WARING DIAGRAM

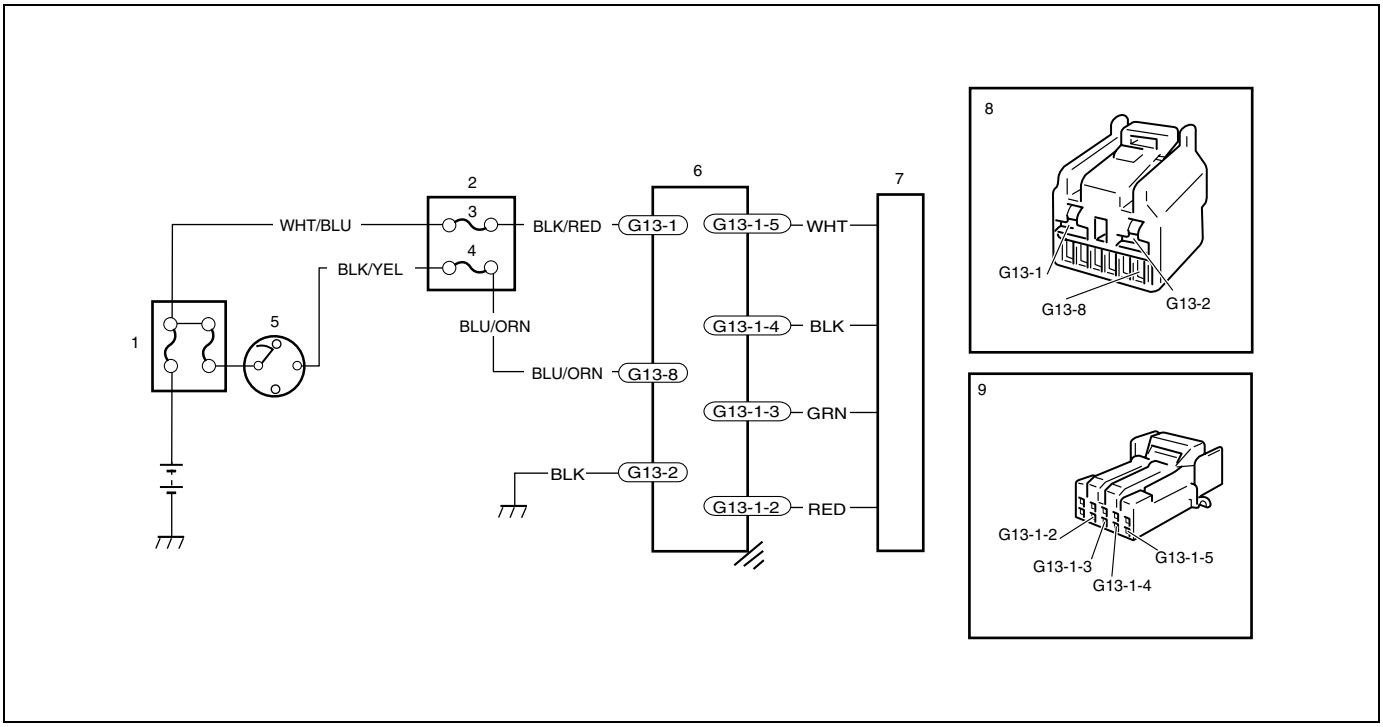

1. Main fuse box	4. "METER" fuse (10 A)	7. Torque sensor
2. Circuit fuse box	5. Ignition switch	8. Connector G13 (viewed from terminal side)
3. "P/S" fuse (30 A)	6. P/S control module	9. Connector G13-1 (viewed from terminal side)

DTC TROUBLESHOOTING

Step	Action	Yes	No
1	1) Was "EPS System Check" performed?	Go to Step 2.	Go to "EPS System Check".
2	1) Is DTC C1114 indicated, too?	Go to flow table corresponding to the DTC No.	Go to Step 3.
3	1) Check for proper connection for 5-terminals connector ("G13-1") to the P/S control module. 2) If OK, check torque sensor and its circuit referring to "Torque Sensor On-Vehicle Inspection" in this section. Is torque sensor in good condition?	Substitute the original P/S control module with a known-good P/S control module, and then recheck.	Replace the steering column assembly, and then recheck.

DTC C1114 Torque Sensor 5 V Power Supply Circuit Failure

WIRING DIAGRAM

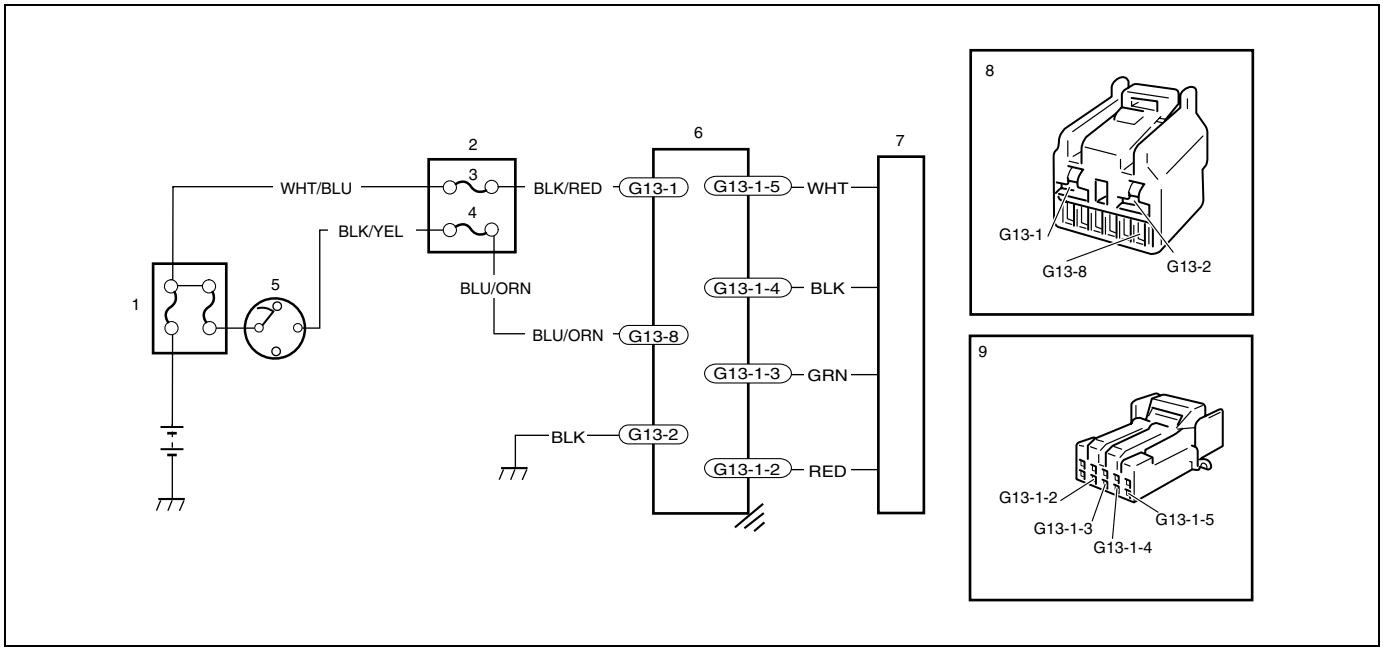

1. Main fuse box	4. "METER" fuse (10 A)	7. Torque sensor
2. Circuit fuse box	5. Ignition switch	8. Connector G13 (viewed from terminal side)
3. "P/S" fuse (30 A)	6. P/S control module	9. Connector G13-1 (viewed from terminal side)

DTC TROUBLESHOOTING

Step	Action	Yes	No
1	Was "EPS System Check" performed?	Go to Step 2.	Go to "EPS System Check".
2	1) Remove steering column hole cover. 2) Check for proper connection for 5-terminals connector ("G13-1") to the P/S control module. 3) If OK, turn ignition switch ON. 4) Check for voltage between "G13-1-2" ("RED" wire) terminal of 5-terminals connector ("G13-1") and body ground with connector ("G13-1") connected to the P/S control module. Is it about 5 V?	Go to Step 3.	Repair high resistance, open or short to power circuit or ground in 5V power supply ("RED" wire) circuit.
3	1) Check torque sensor and its circuit referring to "Torque Sensor On-Vehicle Inspection" in this section. Is torque sensor in good condition?	Substitute the original P/S control module with a known-good P/S control module, and then recheck.	Replace the steering column assembly, and then recheck.

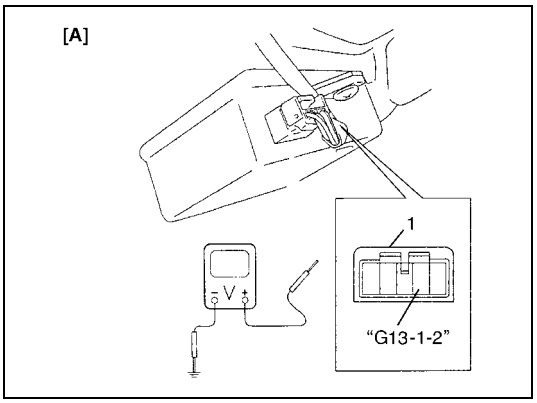

[A]: Fig. for Step 2
1. Connector "G13-1" (viewed from harness side)

DTC C1121/C1123/C1124 VSS Circuit Failure

WIRING DIAGRAM

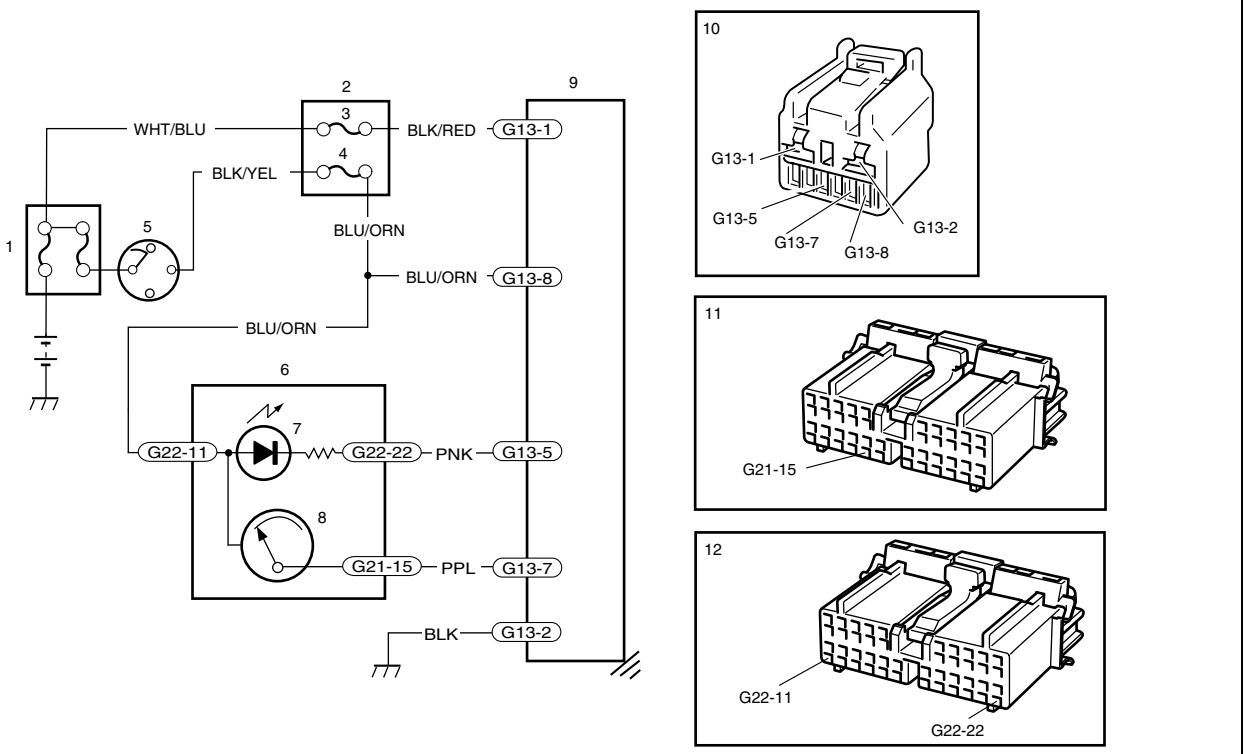

1. Main fuse box	5. Ignition switch	9. P/S control module
2. Circuit fuse box	6. Combination meter	10. Connector G13 (viewed from terminal side)
3. “P/S” fuse (30 A)	7. “EPS” warning lamp	11. Connector G21 (green connector) (viewed from terminal side)
4. “METER” fuse (10 A)	8. Speedometer	12. Connector G22 (blue connector) (viewed from terminal side)

DTC TROUBLESHOOTING

Step	Action	Yes	No
1	Was “EPS System Check” performed?	Go to Step 2.	Go to “EPS System Check”.
2	1) Ignition switch OFF. 2) Remove steering column lower cover. 3) Disconnect 8-terminals connector (“G13”) from P/S control module. 4) Check for proper connection to the P/S control module at “G13-7” (“PPL” wire) terminal. 5) If OK, connect voltmeter between “G13-7” (“PPL” wire) terminal and body ground with connector (“G13”) connected. 6) Hoist front end of vehicle and lock front right tire. 7) Turn front left tire quickly with ignition switch ON. Does voltmeter indicate deflection between 0 – 1 V and 9 – 11 V a few times while tire is turned one revolution?	Check for intermittent trouble referring to “Intermittent and Poor Connection” in Section 0A. If OK, substitute the original P/S control module with a known-good P/S control module, and then recheck.	Repair VSS or its (“PPL” wire) circuit.

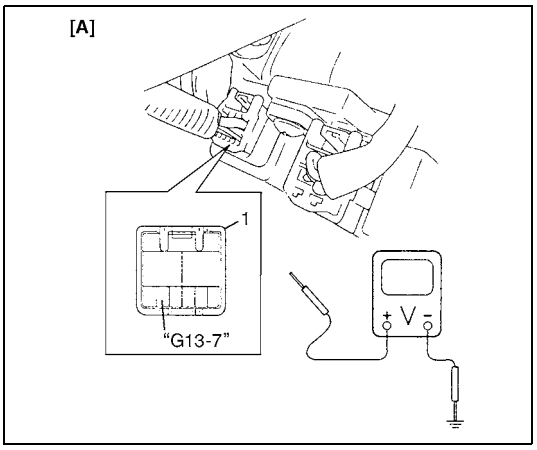

[A]: Fig. for Step 2
1. Connector "G13" (viewed from harness side)

DTC C1122 Engine Speed Signal Circuit Failure

WIRING DIAGRAM

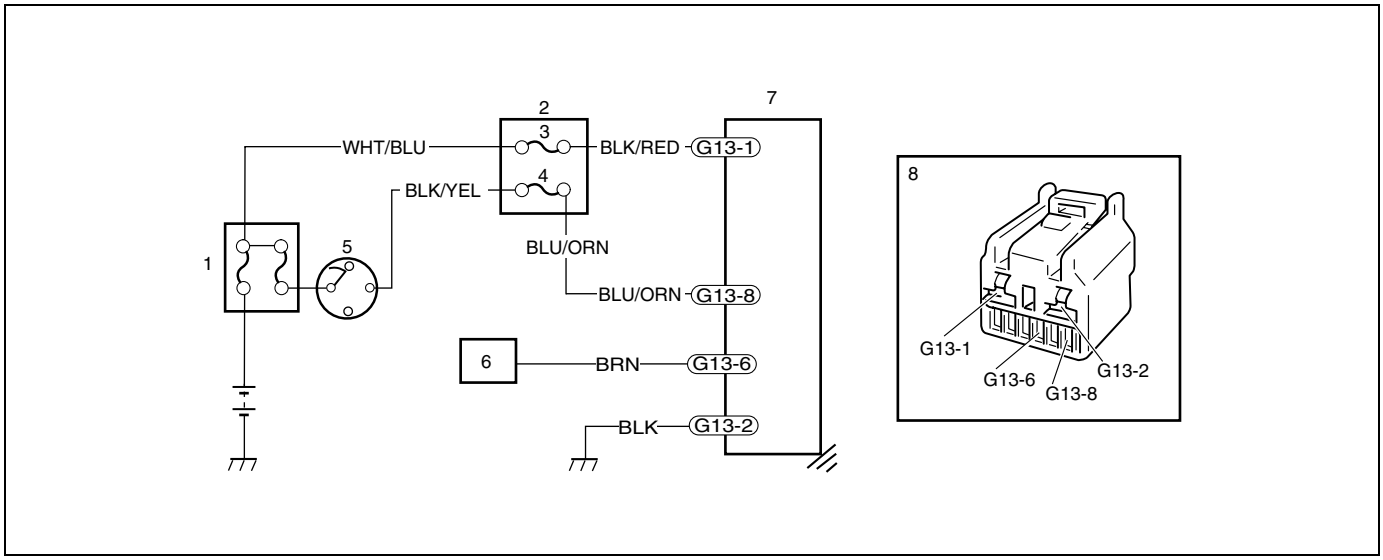

1. Main fuse box	4. "METER" fuse (10 A)	7. P/S control module
2. Circuit fuse box	5. Ignition switch	8. Connector G13 (viewed from terminal side)
3. "P/S" fuse (30 A)	6. ECM	

DTC TROUBLESHOOTING

Step	Action	Yes	No
1	Was "EPS System Check" performed?	Go to Step 2.	Go to "EPS System Check".
2	1) Recheck DTC with engine running. Is DTC C1122 indicated?	Go to Step 3.	P/S system is in normal condition.
3	1) Check for proper connection to the P/S control module and ECM at each "BRN" wire terminal (P/S control module side: "G13-6" terminal, ECM side: Refer to "ECM INPUT/OUTPUT CIRCUIT DIAGRAM" under "Electronic Control System Description" in Section 6E1), then check for intermittent trouble referring to "Intermittent and Poor Connection" in Section 0A. 2) If they are OK, check for high resistance, open or short to power circuit or ground in "BRN" wire circuit. Is check result in good condition?	Substitute the original P/S control module with a known-good P/S control module, and then recheck.	Repair.

DTC C1141/C1142/C1143/C1144/C1145 Motor Circuit Failure

WIRING DIAGRAM

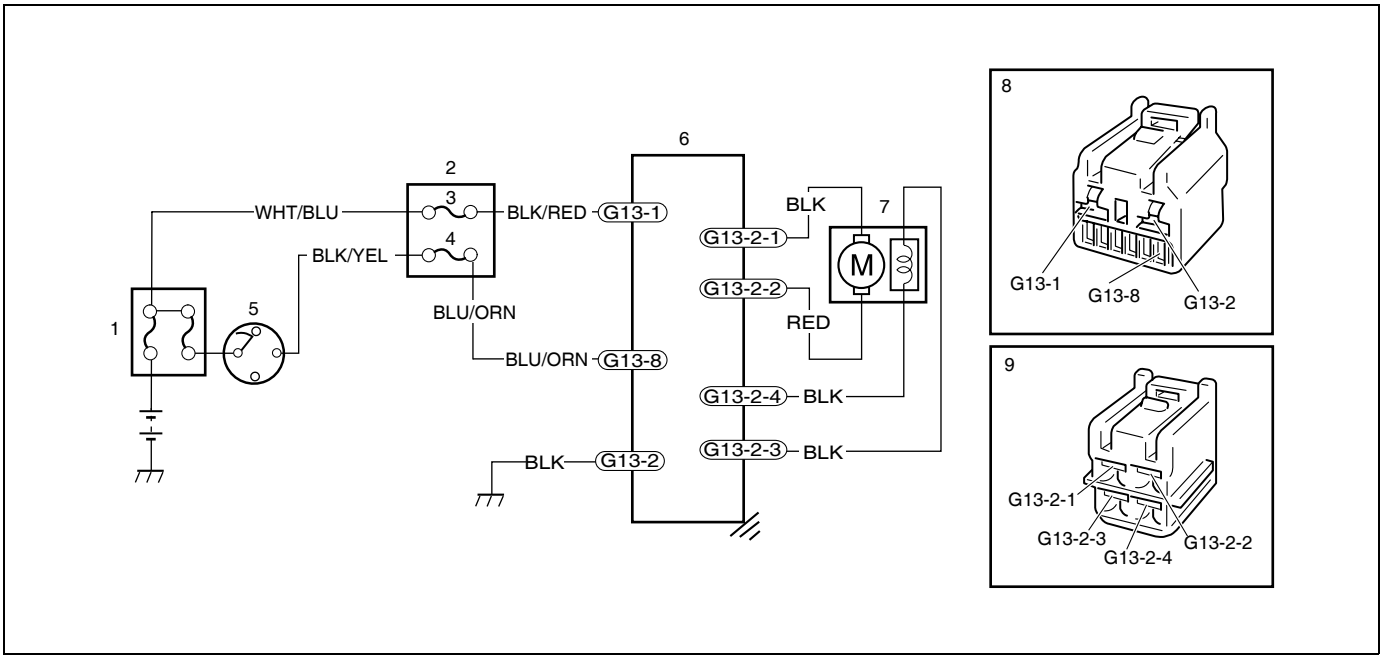

1. Main fuse box	4. "METER" fuse (10 A)	7. Motor assembly (with clutch incorporated)
2. Circuit fuse box	5. Ignition switch	8. Connector G13 (viewed from terminal side)
3. "P/S" fuse (30 A)	6. P/S control module	9. Connector G13-2 (viewed from terminal side)

DTC TROUBLESHOOTING

Step	Action	Yes	No
1	Was "EPS System Check" performed?	Go to Step 2.	Go to "EPS System Check".
2	1) Remove steering column hole cover. 2) Check for proper connection for 4-terminals connector ("G13-2") to P/S control module. 3) If OK, start engine. 4) Check for voltage between "G13-2-1" ("BLK" wire) terminal and body ground and "G13-2-2" ("RED" wire) terminal and body ground with connector ("G13-2") connected to the P/S control module. Are they 5 – 7 V with steering wheel at straight position?	Go to Step 3.	Repair poor connection, high resistance, open or short to power circuit or ground in "G13-2-1" ("BLK" wire) or "G13-2-2" ("RED" wire) circuit.
3	1) Check motor and its circuit referring to "Motor Assembly (with Clutch Incorporated) On-Vehicle Inspection". Is motor and clutch in good condition?	Substitute the original P/S control module with a known-good P/S control module, and then recheck.	Replace the steering column assembly, and then recheck.

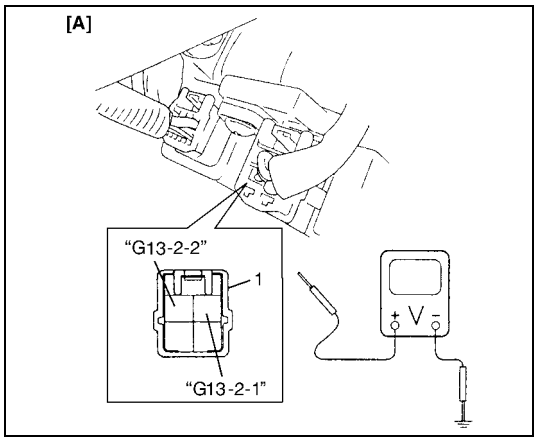

[A]: Fig. for Step 2
1. Connector "G13-2" (viewed from harness side)

DTC C1151 Clutch Circuit Failure

WIRING DIAGRAM

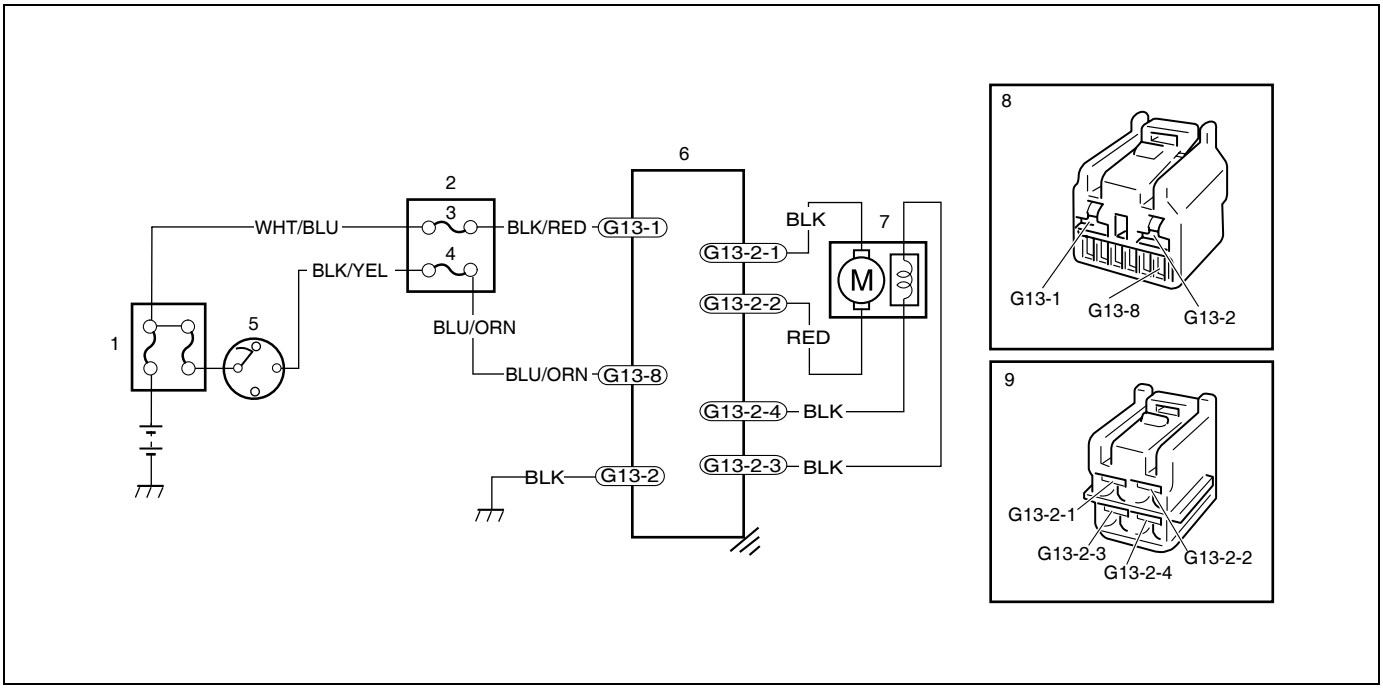

1. Main fuse box	4. "METER" fuse (10 A)	7. Motor assembly (with clutch incorporated)
2. Circuit fuse box	5. Ignition switch	8. Connector G13 (viewed from terminal side)
3. "P/S" fuse (30 A)	6. P/S control module	9. Connector G13-2 (viewed from terminal side)

DTC TROUBLESHOOTING

Step	Action	Yes	No
1	Was "EPS System Check" performed?	Go to Step 2.	Go to "EPS System Check".
2	1) Remove steering column hole cover. 2) Check for proper connection for 4-terminals connector ("G13-2") to the P/S control module. 3) If OK, start engine. 4) Check for voltage between "G13-2-4" ("BLK" wire) terminal and body ground with connector ("G13-2") connected to the P/S control module. Is it 0 V?	Go to Step 3.	Repair poor connection, high resistance, open or short to power circuit or ground in "G13-2-4" ("BLK" wire) circuit.
3	1) Check for voltage between "G13-2-3" ("BLK" wire) terminal and body ground with connector ("G13-2") connected to P/S control module. Is it 10 – 14 V with steering wheel at straight position?	Go to Step 4.	Repair poor connection, high resistance, open or short to power circuit or ground in "G13-2-3" ("BLK" wire) circuit.
4	1) Check motor and its circuit referring to "Motor Assembly (with Clutch Incorporated) On-Vehicle Inspection". Is motor and clutch in good condition?	Substitute the original P/S control module with a known-good P/S control module, and then recheck.	Replace the steering column assembly, and then recheck.

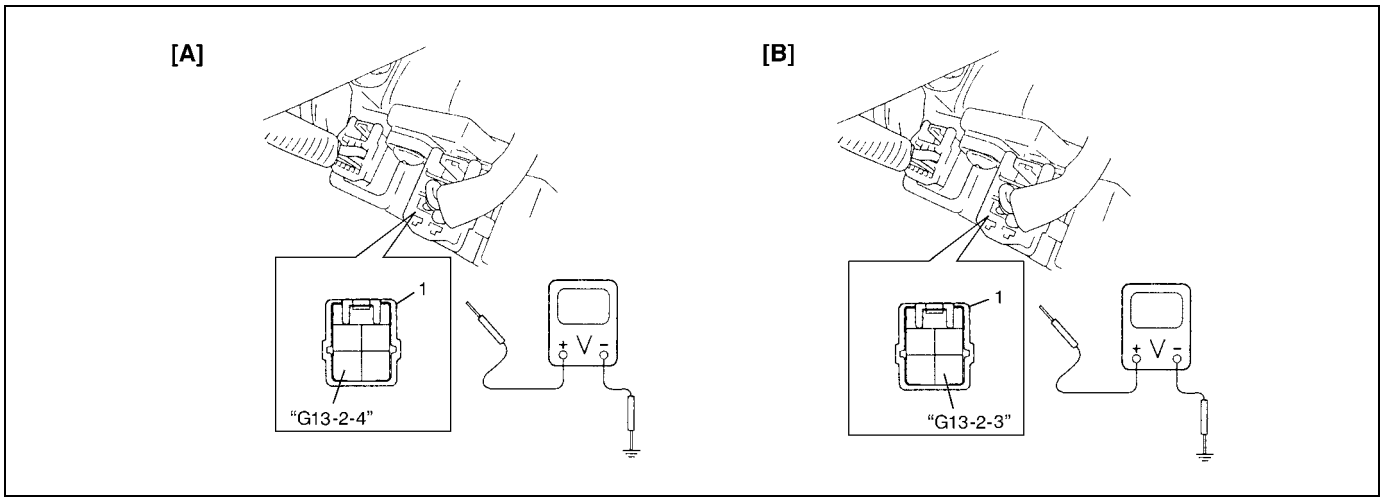

[A]: Fig. for Step 2
[B]: Fig. for Step 3
1. Connector "G13-2" (viewed from harness side)

DTC C1153 P/S Control Module Power Supply Circuit Failure

WIRING DIAGRAM

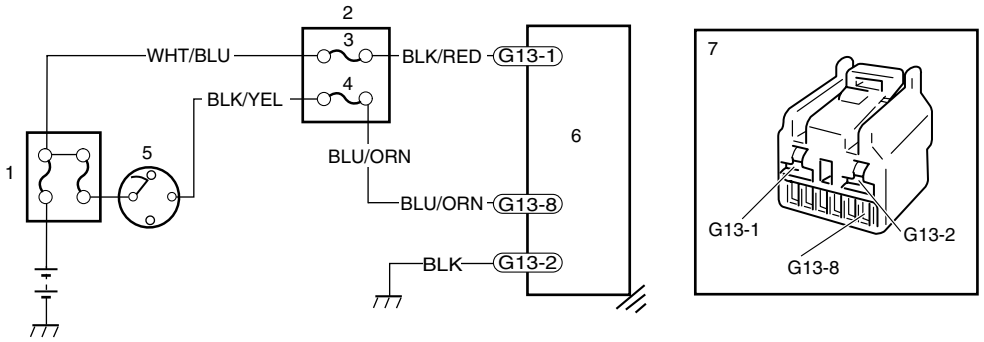

1. Main fuse box	3. "P/S" fuse (30 A)	5. Ignition switch	7. Connector G13 (viewed from terminal side)
2. Circuit fuse box	4. "METER" fuse (10 A)	6. P/S control module	

DTC TROUBLESHOOTING

Step	Action	Yes	No
1	Was "EPS System Check" performed?	Go to STEP 2.	Go to "EPS System Check".
2	1) Remove steering column hole cover. 2) Check "P/S" fuse and check for proper connection to the P/S control module at "G13-1" ("BLK/RED" wire) terminal. 3) If OK, check voltage between "G13-1" terminal and body ground with connector ("G13") connected to the P/S control module. Is it 10 – 14 V?	Check for intermittent trouble referring to "Intermittent and Poor Connection" in Section 0A. If OK, substitute the original P/S control module with a known-good P/S control module, and then recheck.	Repair poor connection or high resistance in "G13-1" ("BLK/RED" wire) circuit.

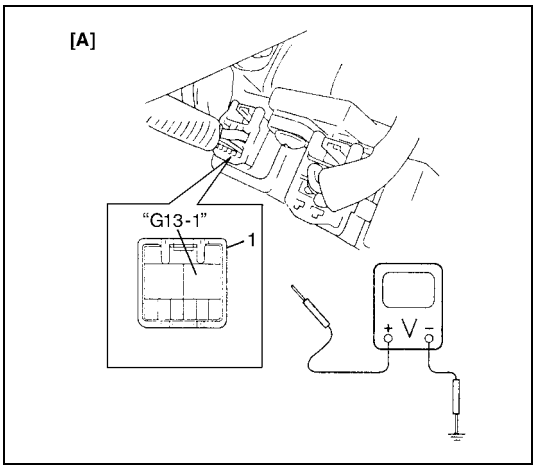

[A]: Fig. for Step 3
1. Connector "G13" (viewed from harness side)

DTC C1152/C1154/C1155 P/S Control Module Failure

Substitute the original P/S control module with a known-good P/S control module, and then recheck.

Trouble Diagnosis (For Trouble Not Indicated by On-Board Diagnostic System)

This section describes trouble diagnosis of the P/S system parts whose trouble is not indicated by the on-board diagnostic system (self-diagnostic function). When no malfunction is indicated by the on-board diagnostic system (self-diagnosis function) and assuredly those steering basic parts as described in “Diagnosis Table” in Section 3 are all in good condition, check the following power steering system parts which may be a possible cause for each symptom of the steering.

Condition	Possible Cause	Correction
Steering wheel feels heavy (Perform “Steering Force Check” in this section before diagnosis.)	Steering wheel installed improperly (twisted)	Install steering wheel correctly.
	Poor performance of torque sensor	Check torque sensor referring to “Torque Sensor On-Vehicle Inspection” in this section.
	Poor performance of motor and clutch	Check motor and clutch referring to “Motor Assembly (with Clutch Incorporated) On-Vehicle Inspection” in this section”.
	Steering column faulty	Replace.
	Poor performance of VSS	Check VSS referring to “DTC P0500 Vehicle Speed Sensor (VSS) Malfunction” in Section 6.
Vehicle pulls to one side during straight driving	Poor performance of torque sensor	Check torque sensor referring to “Torque Sensor On-Vehicle Inspection” in this section.
Poor recovery after turns	Poor performance of torque sensor	Check torque sensor referring to “Torque Sensor On-Vehicle Inspection” in this section.
	Steering column faulty	Replace.

Inspection of P/S Control Module and Its Circuits

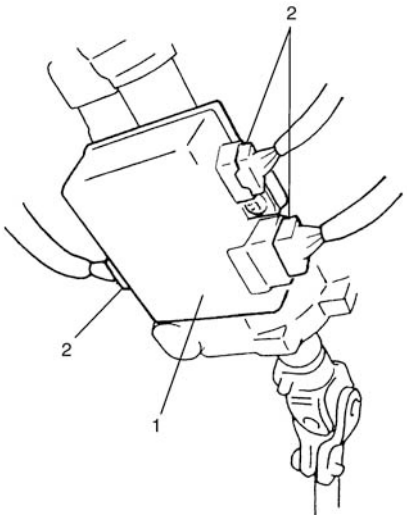

The P/S control module (1) and its circuits can be checked at the P/S control module wiring couplers (2) by measuring voltage and resistance.

CAUTION:

P/S control module cannot be checked by itself. It is strictly prohibited to connect voltmeter or ohmmeter to the P/S control module with connectors disconnected from the P/S control module.

VOLTAGE CHECK

1) Remove steering column hole cover with ignition switch OFF position.
2) Check for voltage at each terminal with connectors (2) connected to the P/S control module.

NOTE:

As each terminal voltage is affected by the battery voltage, confirm if the battery voltage is 11V or more when ignition switch is ON.

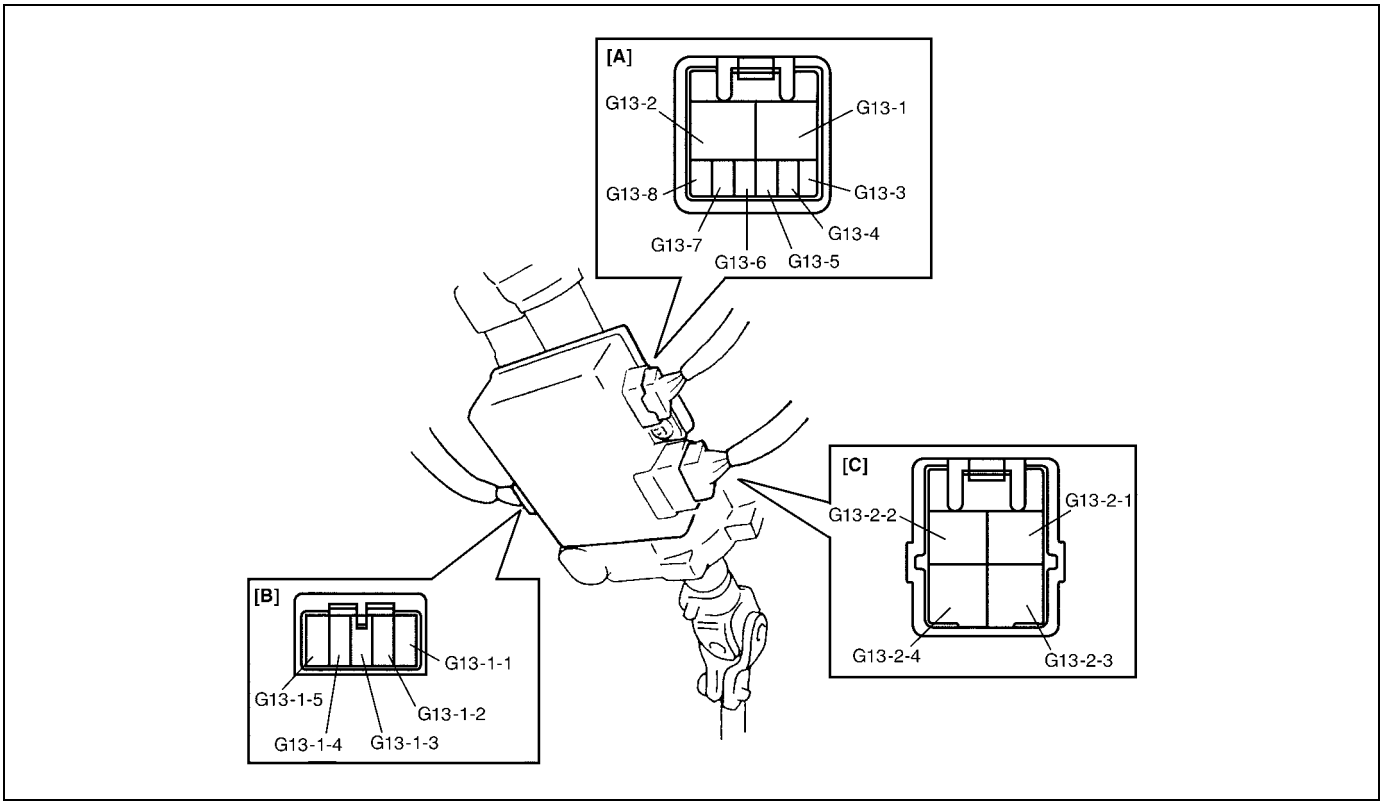

[A]: Connector “G13” (viewed from harness side)
[B]: Connector “G13-1” (viewed from harness side)
[C]: Connector “G13-2” (viewed from harness side)

Terminal	Circuit	Normal Voltage	Condition
G13-1	P/S control module power supply from battery	10 – 14 V	–
G13-2	Ground	–	–
G13-3	Data link connector	–	–
G13-5	“EPS” light	0 V	“EPS” warning lamp ON
G13-6	Engine speed signal	✱ Indicator deflection repeated 0 – 1 V and 10 – 6 V	Engine idling
G13-7	VSS	✱ Indicator deflection repeated 0 – 1 V and 9 – 11 V	• Ignition switch ON • Front left tire turned quickly with right tire locked
G13-8	P/S control module power supply from ignition switch	10 – 14 V	Ignition switch ON
G13-1-2	5V power supply for torque sensor	About 5 V	• Ignition switch ON • Check voltage between “G13-1-2” and “G13-1-4” terminals
G13-1-3	Torque sensor (GND)	0 V	–
G13-1-4	Torque sensor (Sub)	About 2.5 V	• Ignition switch ON and steering wheel at straight position • Check voltage between “G13-1-4” and “G13-1-3” terminals
G13-1-5	Torque sensor (Main)	About 2.5 V	• Ignition switch ON and steering wheel at straight position • Check voltage between “G13-1-5” and “G13-1-4” terminals
G13-2-1	Motor output 1	5 – 7 V	Engine idling and steering wheel at straight position
G13-2-2	Motor output 2	5 – 7 V	Engine idling and steering wheel at straight position
G13-2-3	Clutch output 1	10 – 14 V	Engine idling
G13-2-4	Clutch output 2	0 V	–

NOTE:

✱: The voltage of this circuit may not be checked by voltmeter. If so, use oscilloscope.

Steering Wheel Play Check

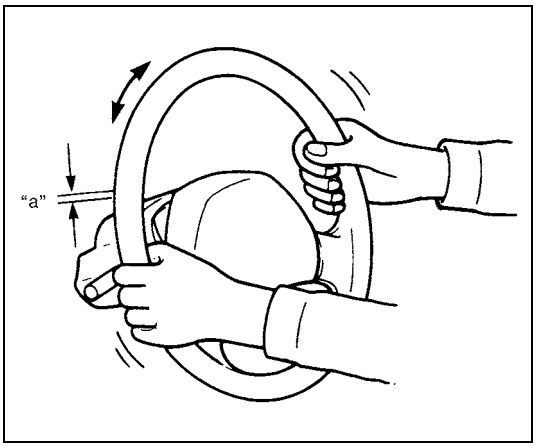

- Check steering wheel for looseness or rattle by moving it in its shaft direction and lateral direction. If found to be defective, repair or replace.
- Check steering wheel play, holding vehicle in straight forward condition on the ground and with engine stopped.

Steering wheel play
"a": 0 – 30 mm (0 – 1.2 in.)

If steering wheel play is not within specification, inspect as follows and replace if found to be defective.

- Tie rod end ball stud for wear
- Lower ball joint for wear
- Steering shaft joint for wear
- Steering pinion or rack gear for wear or breakage
- Each part for looseness

Steering Force Check

1) Place vehicle on level road and set steering wheel at straight-ahead position.
2) Check if tire inflation pressure is as specified on tire placard on vehicle.
3) Remove driver air bag (inflator) module referring to "Driver Air Bag (Inflator) Module Removal and Installation" in Section 3C.
4) Start engine.

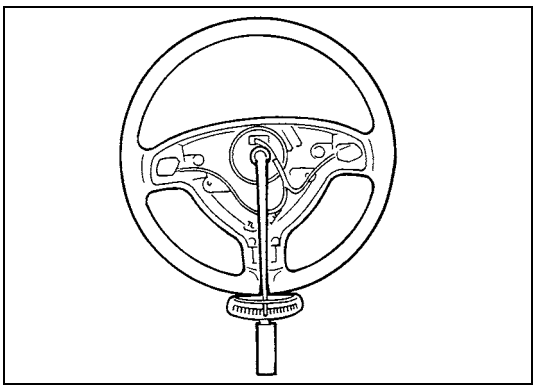

5) With engine idling, measure steering force by turning torque wrench.

Steering force
Less than 6.4 N·m (0.64 kg-m, 4.6 lb-ft)

6) Install driver air bag (inflator) module referring to "Driver Air Bag (Inflator) Module Removal and Installation" in Section 3C.

On-Vehicle Service

Steering Column Removal and Installation

Refer to “Steering Column Removal and Installation” in Section 3C for removal and installation of steering column assembly, but perform the following step beforehand.

1) Remove steering column hole cover.
2) Disconnect all couplers from P/S control module.

CAUTION:

Never disassemble steering column assembly and remove torque sensor or motor assembly (with clutch incorporated). Performing any of these prohibited services will affect original performance of EPS system.

Checking Steering Column Check After Accident Damage

NOTE:

Vehicles involved in accidents resulting in body damage, where steering column has been impacted (or air bag deployed) may have a damaged or misaligned steering column.

Refer to “Checking Steering Column For Accident Damage” in Section 3C.

P/S Control Module Removal and Installation

REMOVAL

1) Disconnect negative cable at battery.
2) Remove steering column hole cover.
3) Disconnect connectors (1) from P/S control module.
4) Remove P/S control module (2) from steering column assembly (3).

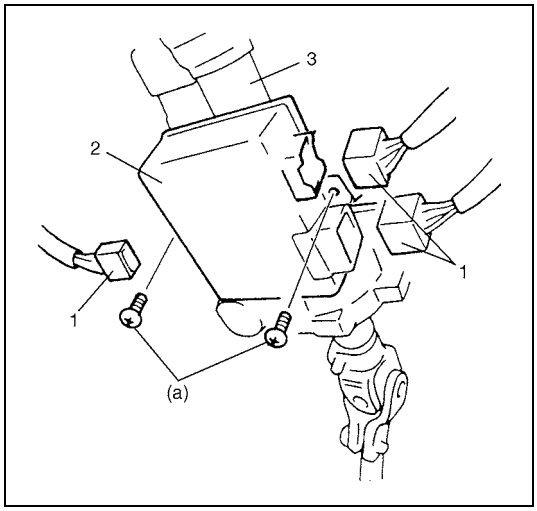

INSTALLATION

Reverse removal procedure for installation noting the following.

- Tighten P/S control module screw to the specified torque.

P/S control module screw
(a) : 3 N·m (0.3 kg-m, 2.0 lb-ft)

Torque Sensor On-Vehicle Inspection

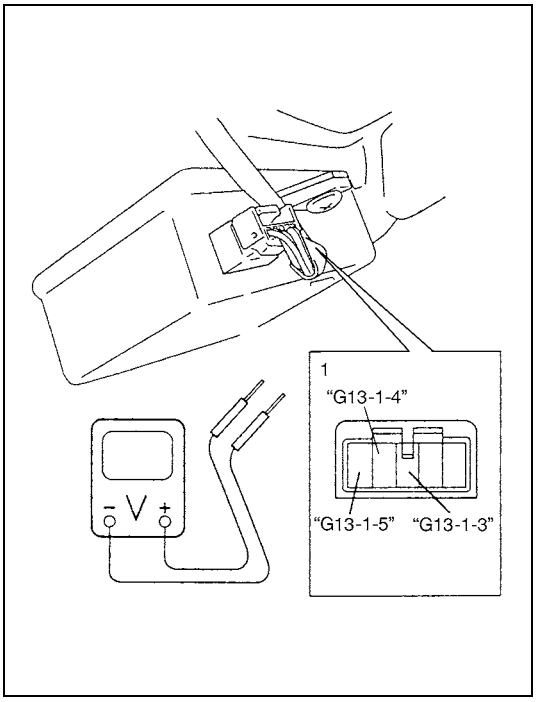

1) Remove steering column hole cover.
2) Turn ignition switch to ON position.
3) Check for voltage between terminals of torque sensor connector with connecting it to P/S control module and not running engine. If check result is not satisfactory, replace steering column assembly.

Torque sensor specification

	Steering wheel fully turned right	Steering wheel held at position for run straight	Steering wheel fully turned left
Main sensor ("G13-1-5" – "G13-1-3")	Above 3.9 V	About 2.5 V	Above 1.1 V
Sub sensor ("G13-1-4" – "G13-1-3")	Above 1.1 V	About 2.5 V	Above 3.9 V

1. Connector "G13-1" (viewed from harness side)

Motor Assembly (with Clutch Incorporated) On-Vehicle Inspection

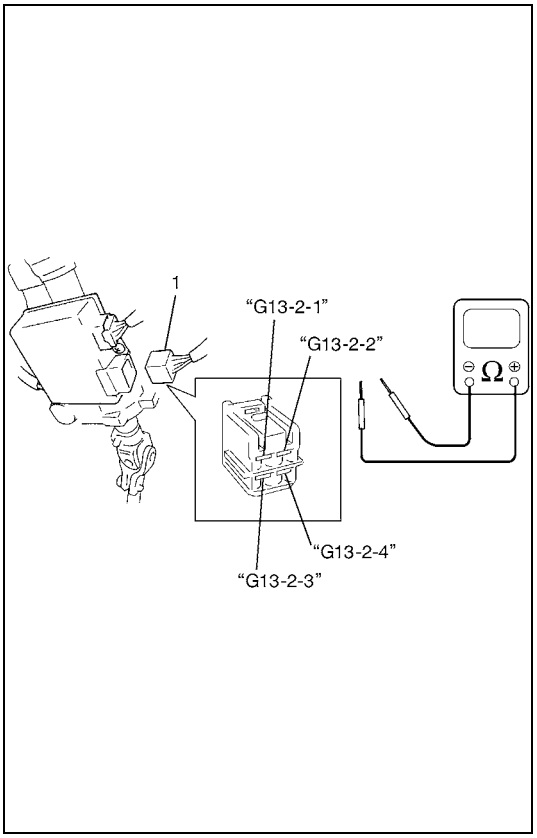

1) Remove steering column hole cover.
2) Disconnect motor and clutch connector (1) from P/S control module with ignition switch OFF.
3) Check for resistance between terminals of motor and clutch connector (1).

Motor and clutch circuit resistance

"G13-2-2" and "G13-2-1" (For motor)	About 1 Ω
"G13-2-4" and "G13-2-3" (For clutch)	About 12 Ω (at 20°C (68°F))

If check result is not as specified above, replace steering column assembly.

4) Check for continuity between terminal of motor and clutch connector (1) and body ground.

Motor and clutch circuit resistance

"G13-2-4" and body ground	No continuity
"G13-2-2" and body ground	No continuity

If check result is not as specified above, replace steering column assembly.

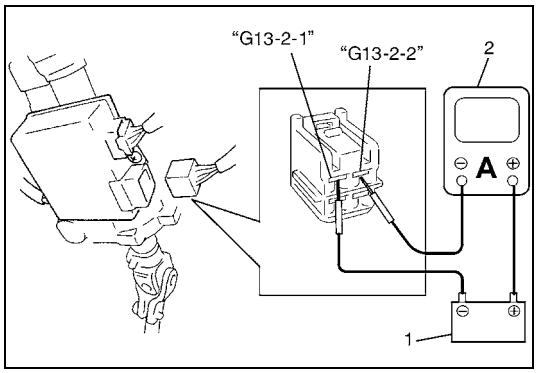

5) Connect battery (1) between "G13-2-2" and "G13-2-1". Check if motor rotates smoothly, and then measure current between "G13-2-1" and "G13-2-2" using ammeter (2) as shown in figure. If check result is not satisfactory, replace steering column assembly.

Motor and clutch circuit current (reference value)
Standard: About 0.65 A

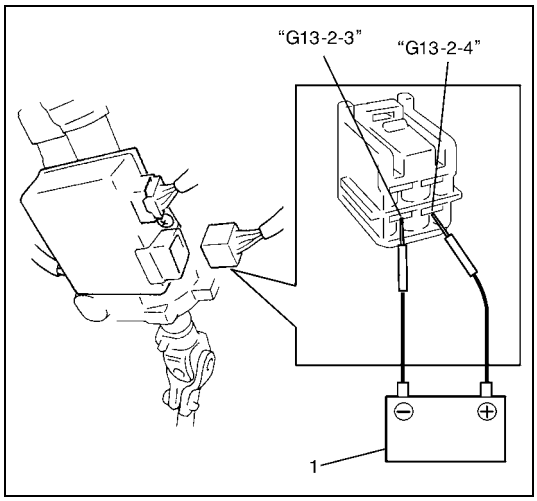

6) Connect battery (1) between "G13-2-4" and "G13-2-3", and then check that sound of clutch operation is heard. If check result is not satisfactory, replace steering column assembly.

Special Tool

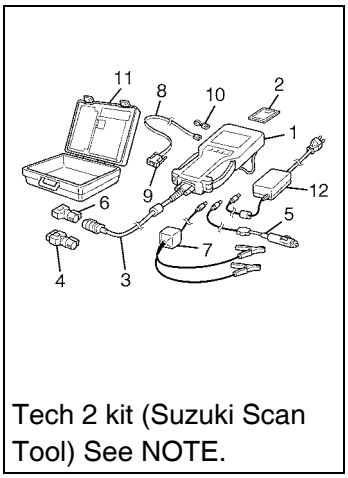

Tech 2 kit (Suzuki Scan Tool) See NOTE.

NOTE:

This kit includes the following items.
1. Tech 2, 2. PCMCIA card, 3. DLC cable, 4. SAE 16/19 adapter, 5. Cigarette cable, 6. DLC loopback adapter, 7. Battery power cable, 8. RS232 cable, 9. RS232 adapter, 10. RS232 loopback connector, 11. Storage case, 12. Power supply

SECTION 3C

STEERING WHEEL AND COLUMN

WARNING:

For vehicles equipped with a Supplemental Restraint (Air Bag) System:

- **Service on and around the air bag system components or wiring must be performed only by an authorized SUZUKI dealer. Please observe all WARNINGS and "Service Precautions" under "General Description" in air bag system section before performing service on or around the air bag system components or wiring. Failure to follow WARNINGS could result in unintentional activation of the system or could render the system inoperative. Either of these two conditions may result in severe injury.**
- **The procedures in this section must be followed in the order listed to temporarily disable the air bag system and prevent false diagnostic codes from setting. Failure to follow procedures could result in possible air bag system activation, personal injury or otherwise unneeded air bag system repairs.**

CAUTION:

When fasteners are removed, always reinstall them at the same location from which they were removed. If a fastener needs to be replaced, use the correct part number fastener for that application. If the correct part number fastener is not available, a fastener of equal size and strength (or stronger) may be used. Fasteners that are not reused, and those requiring thread-locking compound, will be called out. The correct torque value must be used when installing fasteners that require it. If the above procedures are not followed, parts or system damage could result.

CONTENTS

Precautions.....3C-2
Service Precautions of Air Bag Steering Wheel and Column.....3C-2
Service and Diagnosis of Air Bag Steering Wheel and Column.....3C-2
Disabling Air Bag System of Air Bag Steering Wheel and Column.....3C-2
Enabling Air Bag System of Air Bag Steering Wheel and Column.....3C-2
Handling and Storage of Air Bag Steering Wheel and Column.....3C-2
Disposal of Air Bag Steering Wheel and Column.....3C-2
On-Vehicle Service.....3C-3
Steering Wheel and Column Components Location.....3C-3
Driver Air Bag (Inflator) Module Removal and Installation.....3C-4
Driver Air Bag (Inflator) Module Inspection...3C-5
Steering Wheel Removal and Installation.....3C-6
Centering Contact Coil Cable Assembly.....3C-7
Contact Coil Cable Assembly Removal and Installation.....3C-8
Contact Coil Cable Assembly Inspection....3C-10
Steering Column Removal and Installation...3C-11
Steering Column Inspection.....3C-14
Steering Lower Shaft Removal and Installation.....3C-14
Checking Steering Column For Accident Damage 3C-15
Required Service Material.....3C-17
Special Tool.....3C-17

Precautions

Service Precautions of Air Bag Steering Wheel and Column

For service precautions, refer to “Service Precautions” in Section 10B.

Service and Diagnosis of Air Bag Steering Wheel and Column

For diagnosis and servicing, refer to “Service and diagnosis” under “Service Precautions” in Section 10B.

Disabling Air Bag System of Air Bag Steering Wheel and Column

For disabling air bag system, refer to “Disabling air bag system” under “Service Precautions” in Section 10B.

Enabling Air Bag System of Air Bag Steering Wheel and Column

For enabling air bag system, refer to “Enabling air bag system” under “Service Precautions” in Section 10B.

Handling and Storage of Air Bag Steering Wheel and Column

For handling and storage, refer to “Handling and storage” under “Service Precautions” in Section 10B.

Disposal of Air Bag Steering Wheel and Column

For disposal, refer to “Deployment/Activation Outside of Vehicle” and “Deployment/Activation Inside of Vehicle” in Section 10B.

On-Vehicle Service

Steering Wheel and Column Components Location

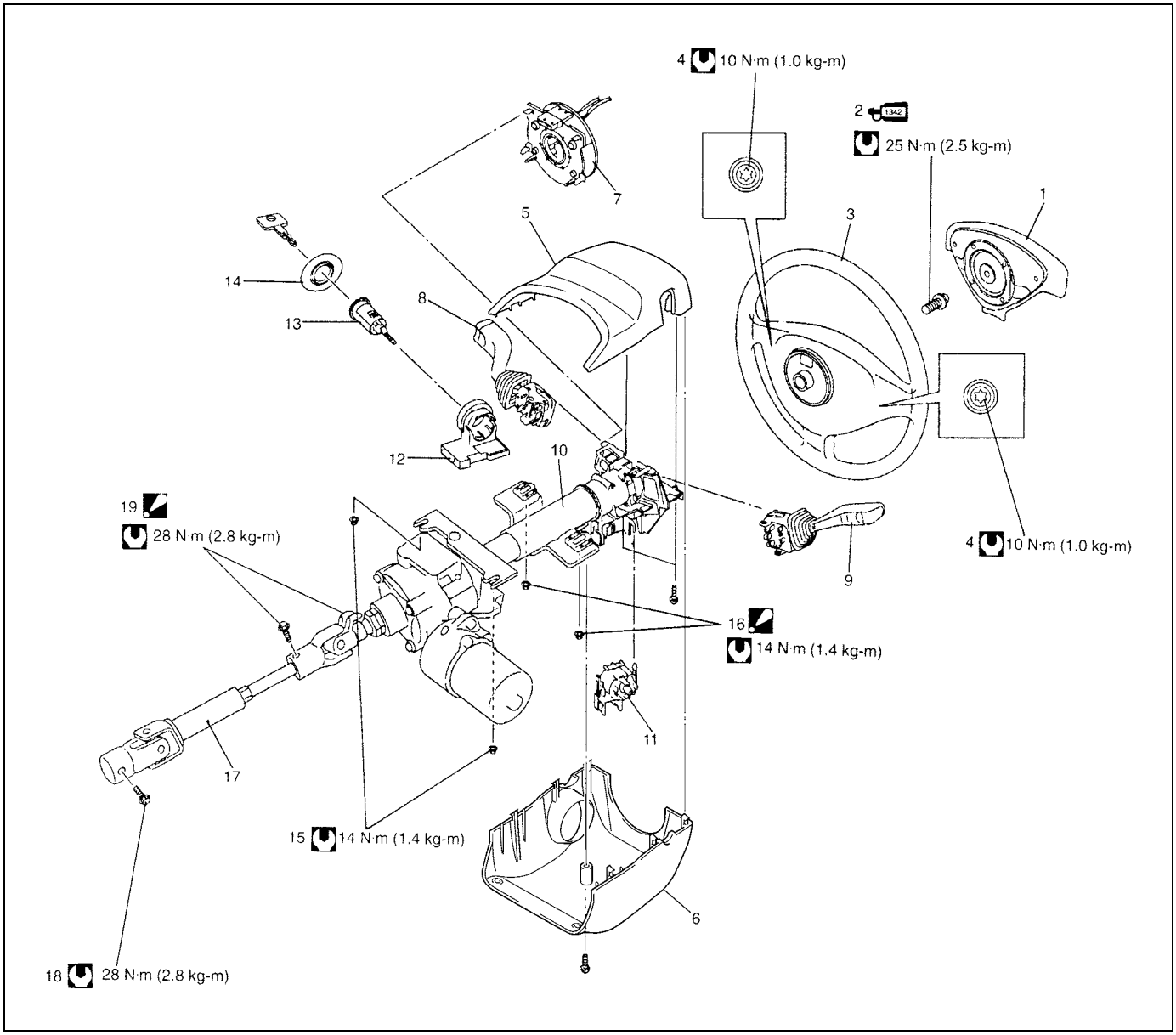

1. Driver air bag (inflator) module	8. Wiper switch assembly	15. Steering column lower mounting nut
1207D 2. Steering shaft bolt : Apply thread lock cement 1342 99000-32050 to all around thread part of steering shaft bolt.	9. Turn & dimmer switch assembly	16. Steering column upper mounting nut: After tightening lower nut, tighten upper nut.
3. Steering wheel	10. Steering column assembly	17. Lower shaft
4. Driver air bag (inflator) module mounting bolt	11. Ignition switch assembly	18. Lower joint bolt
5. Steering column upper cover	12. Immobilizer control module	19. Upper joint bolt: After tightening lower joint bolt, tighten upper joint bolt.
6. Steering column lower cover	13. Ignition switch cylinder assembly	: Tightening torque
7. Contact coil cable assembly	14. Ignition switch protector	

Driver Air Bag (Inflator) Module Removal and Installation

WARNING:

When handling an air bag (inflator) module, be sure to read "Service Precautions of Air Bag Steering Wheel and Column" given earlier in this section and observe each instruction. Failure to follow them could cause a damage to the air bag (inflator) module or result in personal injury.

REMOVAL

1) Disconnect negative battery cable at battery terminal.
2) Disable air bag system. Refer to "Disabling air bag system" in Section 10B.

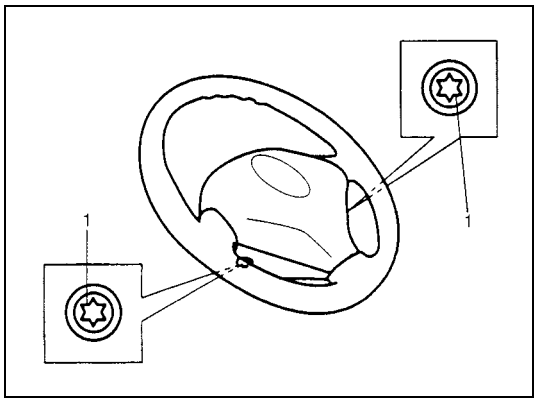

3) Loosen 2 bolts (1) mounting driver air bag (inflator) module till it turns freely.

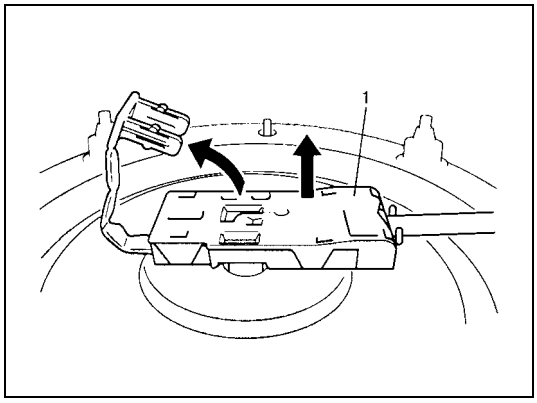

4) Remove air bag (inflator) module from steering wheel.
5) Disconnect yellow connector (1) of driver air bag (inflator) module as shown in figure.

INSTALLATION

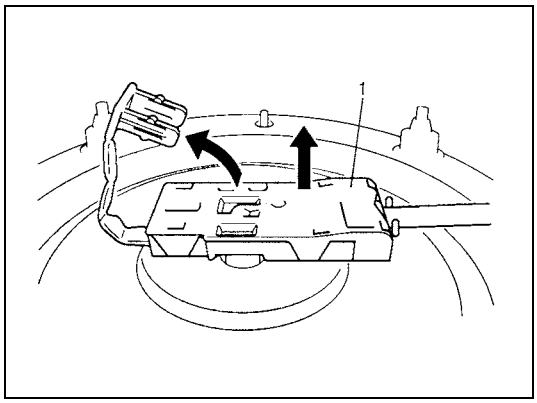

1) Connect yellow connector (1) of driver air bag (inflator) module and then lock (2) securely as shown in figure.

2) Install driver air bag (inflator) module to steering wheel, taking care so that no part of wire harness is caught between them.

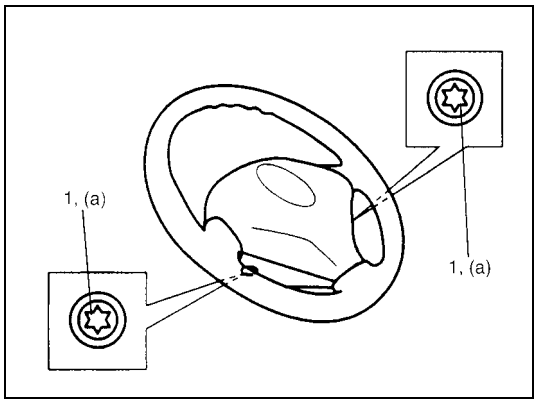

3) Tighten driver air bag (inflator) module mounting bolts (1) to specified torque.

Tightening torque
Air bag module mounting bolt
(a): 10 N·m (1.0 kg-m, 7.5 lb-ft)

4) Make sure that clearance between module and steering wheel is uniform all the way.
5) Connect negative battery cable.
6) Enable air bag system. Refer to “Enabling air bag system” in Section 10B.

Driver Air Bag (Inflator) Module Inspection

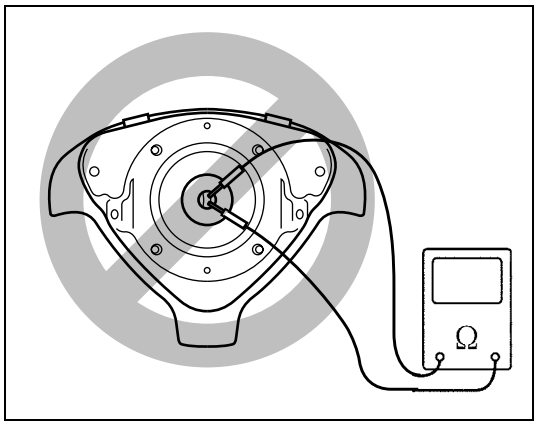

WARNING:
Never disassemble air bag (inflator) module or measure its resistance. Otherwise, personal injury may result.

CAUTION:
If air bag (inflator) module was dropped from a height of 90 cm (3 ft) or more, it should be replaced.

Check air bag (inflator) module visually and if any of the following is found, replace it with a new one.

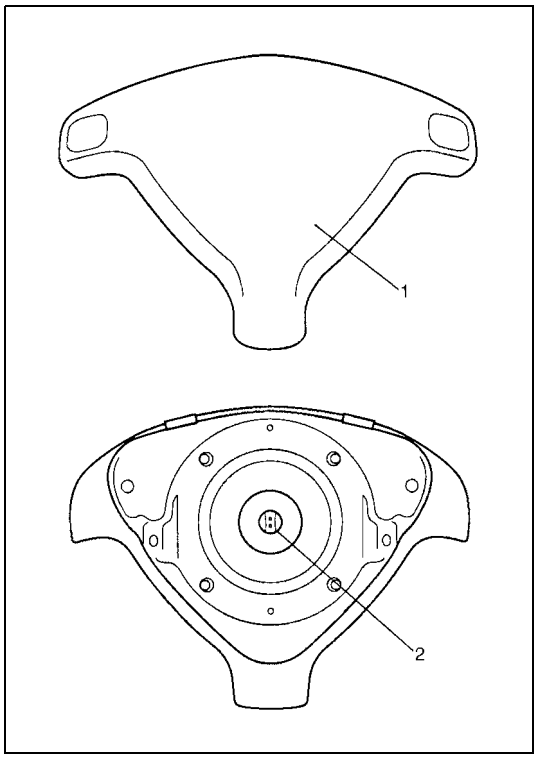

- Air bag being deployed
- Trim cover (pad surface) (1) being cracked
- Terminal (2) being damaged
- Air bag (inflator) module being damaged or having been exposed to strong impact (dropped)

Steering Wheel Removal and Installation

CAUTION:
Do not turn the contact coil more than allowable number of turns (about two and a half turns from the center position clockwise or counterclockwise respectively) with steering wheel removed, or coil will break.

REMOVAL

1) Disconnect negative battery cable at battery terminal.
2) Disable air bag system. Refer to “Disabling air bag system” in Section 10B.
3) Remove driver air bag (inflator) module from steering wheel. Refer to “Driver Air Bag (Inflator) Module Removal and Installation” in this section.
4) Disconnect horn connector.
5) Lift up and turn steering shaft bolt from steering shaft about 3 times.

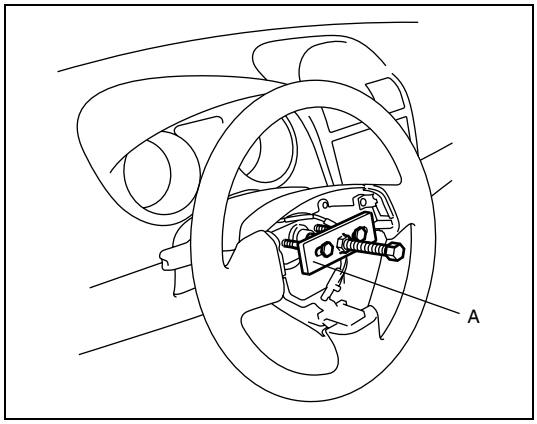

6) Lift up steering wheel in the front by using special tool.
   Special tool
   “A”: 09944-36011

CAUTION:
Do not hammer the end of the shaft. Hammering it will loosen the plastic shear pins which maintain the column length and impair the collapsible design of the column.

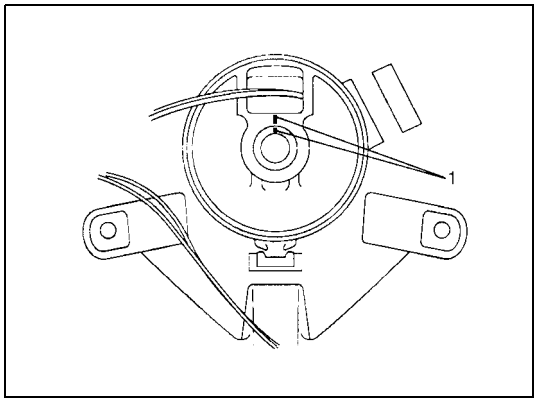

7) Remove steering shaft bolt and then make alignment marks (1) on steering wheel and shaft for a guide during reinstallation.
8) Remove steering wheel.

INSTALLATION

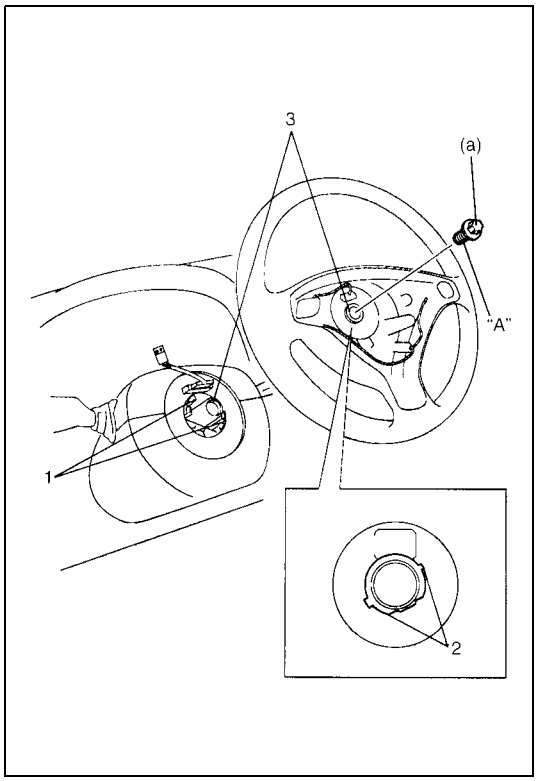

1) Check that vehicle's front tires are at straight-ahead position and contact coil is centered. If contact coil is turned after removing steering wheel, center contact coil referring to "Centering Contact Coil Cable Assembly" in this section.

CAUTION:

These two conditions are prerequisite for installation of steering wheel. If steering wheel has been installed without these conditions, contact coil will break when steering wheel is turned.

2) Install steering wheel to steering shaft with 2 grooves (1) on contact coil fitted in two lugs (2) in the back of steering wheel and also aligning marks (3) on steering wheel and steering shaft.
3) Apply thread lock to all around thread part of steering shaft bolt and tighten to specified torque.

"A": Thread lock cement 1342, 99000-32050
Tightening torque
Steering shaft bolt (a): 25 N·m (2.5 kg-m, 18.5 lb-ft)

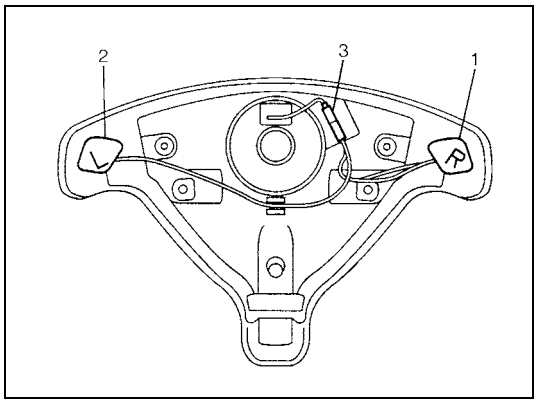

4) Install horn buttons, right (1) and left (2), and fix connector (3) securely.
5) Install driver air bag (inflator) module to steering wheel. Refer to "Driver Air Bag (Inflator) Module Removal and Installation" in this section.
6) Connect negative battery cable.
7) Enable air bag system. Refer to "Enabling air bag system" in Section 10B.

Centering Contact Coil Cable Assembly

1) Check that vehicle's wheels (front tires) are set at straight-ahead position.
2) Check that ignition switch is at "LOCK" position.

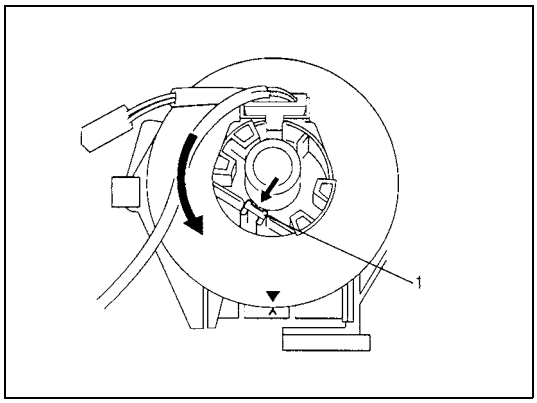

3) With pushing lock lever (1) and releasing contact coil lock, turn contact coil counterclockwise slowly with a light force till contact coil will not turn any further.

NOTE:

Contact coil can turn about 5 turns at maximum, that is, if it is at the center position, can turn about two and a half turns both clockwise and counterclockwise.

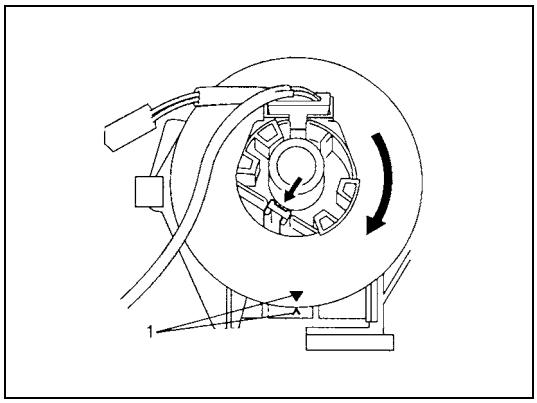

4) From the position where contact coil became unable to turn any further (it stopped), turn it back clockwise about two and a half rotations and align center mark with alignment mark (1).

Contact Coil Cable Assembly Removal and Installation

CAUTION:

Do not turn contact coil more than allowable number of turns (about two and a half turns from the center position clockwise or counterclockwise respectively), or coil will break.

REMOVAL

1) Disconnect negative battery cable at battery terminal.
2) Disable air bag system. Refer to “Disabling air bag system” in Section 10B.
3) Remove steering wheel from steering column. Refer to “Steering Wheel Removal and Installation” in this section.

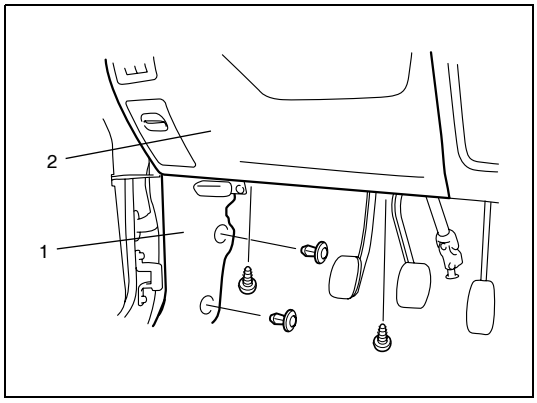

4) Remove dash side trim (1) and steering column hole cover (2).

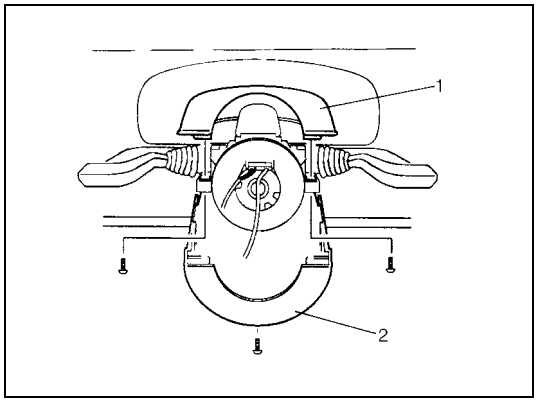

5) Remove steering column lower cover (2) and upper cover (1).

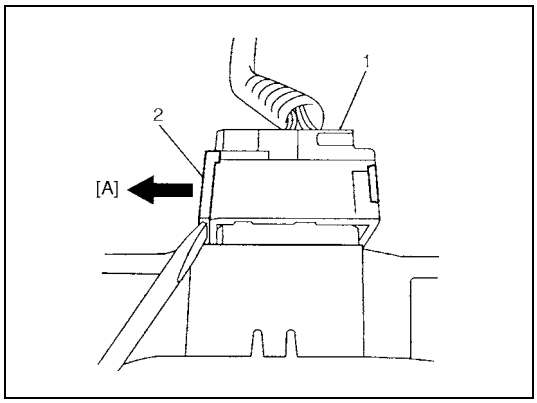

6) Disconnect connector (1) from contact coil cable assembly by pulling connector lock (2) to the outside (A).

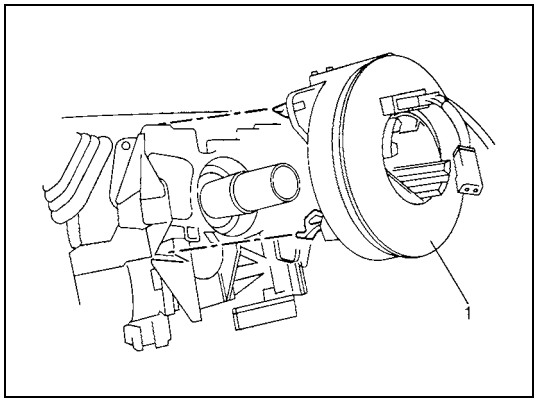

7) Remove contact coil cable assembly (1) from steering column.

INSTALLATION

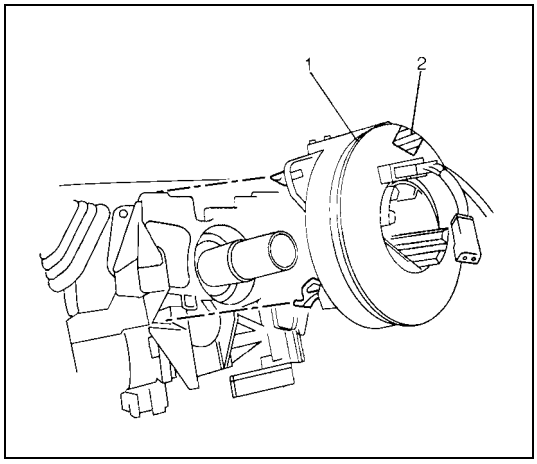

1) Check to make sure that vehicle's front tires are set at straight-ahead position and then ignition switch is at "LOCK" position.
2) Install contact coil cable assembly (1) to steering column securely.

NOTE:

New contact coil cable assembly is supplied with contact coil set and held at its center position with a seal (2). Peel this seal after installing contact coil cable assembly to steering column.

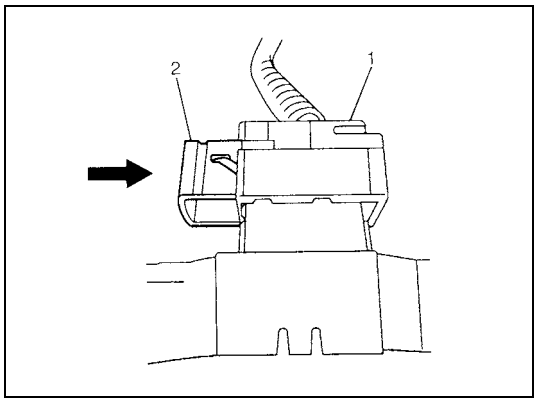

3) Connect connector (1) to contact coil cable assembly by pushing connector lock (2) into connector.

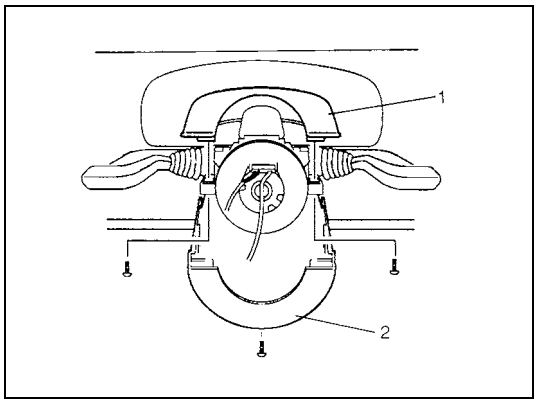

4) Install steering column upper cover (1) and lower cover (2).

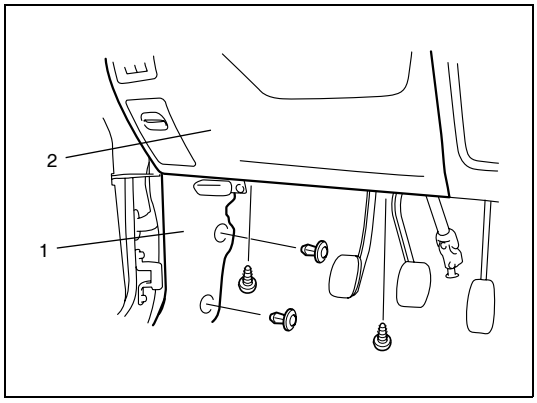

5) Install steering column hole cover (2) and dash side trim (1).

6) Install steering wheel to steering column referring to “Steering Wheel Removal and Installation” in this section.
7) Connect battery negative cable.
8) Enable air bag system referring to “Enabling air bag system” in Section 10B.

Contact Coil Cable Assembly Inspection

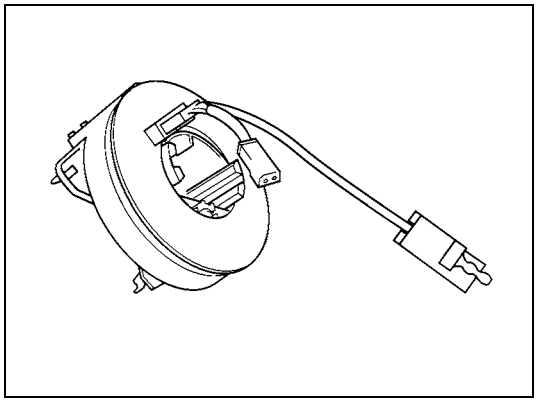

Check contact coil cable assembly wire harness for any signs of scorching, melting or other damage. If it is damaged, replace.

Steering Column Removal and Installation

CAUTION:

Once the steering column is removed from the vehicle, the column is extremely susceptible to damage.

- **Dropping the column assembly on its end could collapse the steering shaft or loosen the plastic shear pins which maintain column length.**
- **Leaning on the column assembly could cause it to bend or deform.**

Any of the above damage could impair the column's collapsible design.

Steering column mounting nuts should not be loosened with steering shaft joint upper side bolt tightened as this could cause damage to shaft joint bearing.

NOTE:

When servicing steering column or any column-mounted component, remove steering wheel. But when removing steering column simply to gain access to instrument panel components, leave steering wheel installed on steering column.

REMOVAL

1) Disconnect negative battery cable at battery terminal.
2) Disable air bag system referring to "Disabling air bag system" in Section 10B.
3) Remove steering wheel and contact coil cable assembly referring to "Steering Wheel Removal and Installation" and "Contact Coil Cable Assembly Removal and Installation" in this section.
4) Detach turn & dimmer switch assembly and wiper switch assembly from steering column.

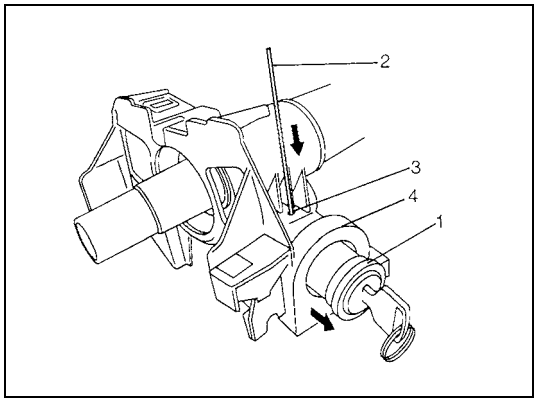

5) Remove ignition switch cylinder assembly (1) as follows.
   a) Turn ignition switch key to "ACC" position.
   b) Insert 2 mm (0.078 in.) rod (2) through hole (3) and push ignition switch cylinder lock.
6) Remove immobilizer control module (4) from steering column.

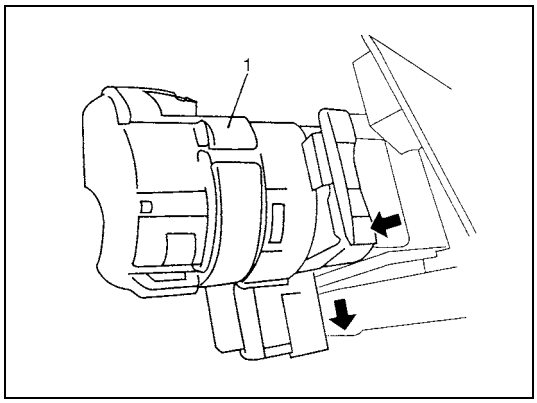

7) Detach ignition switch assembly (1) from steering column.

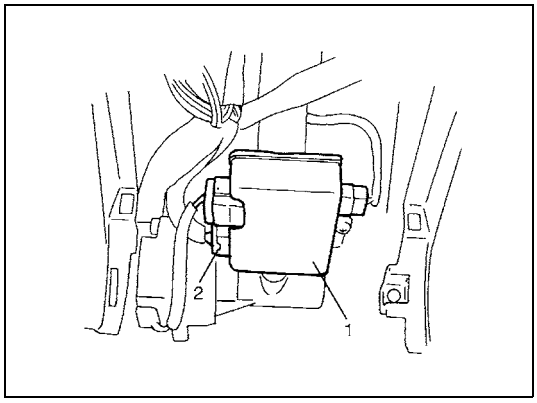

8) Disconnect connector (2) from P/S control module (1) if equipped.

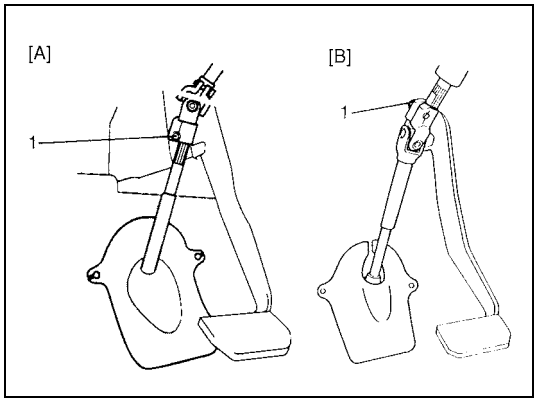

9) Remove steering shaft upper joint bolt (1).

[A]: Power steering
[B]: Manual steering

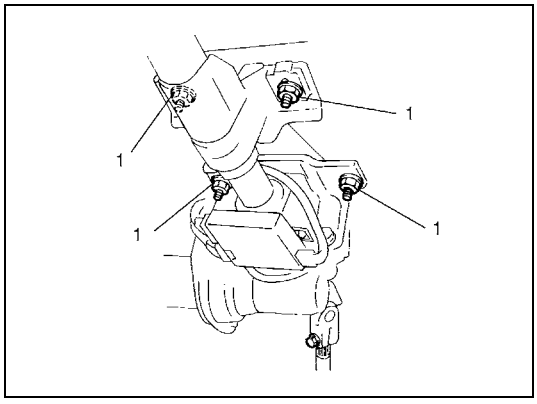

10) Remove steering column mounting nuts (1).
11) Remove steering column from vehicle.

WARNING:
Never rest a steering column assembly on the steering wheel with the air bag (inflator) module face down and column vertical. Otherwise, personal injury may result.

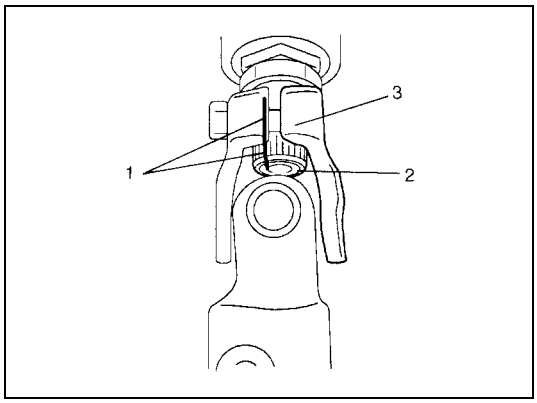

12) When disconnecting upper joint (3) from power steering column shaft (2), make alignment marks (1) on column shaft and upper joint.

INSTALLATION

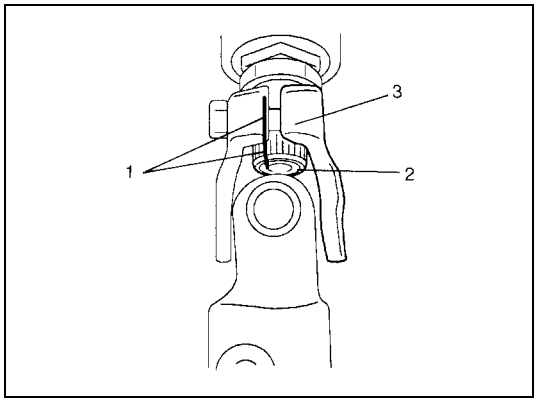

1) Install upper joint (3) and steering column shaft (2) according to alignment mark (1).

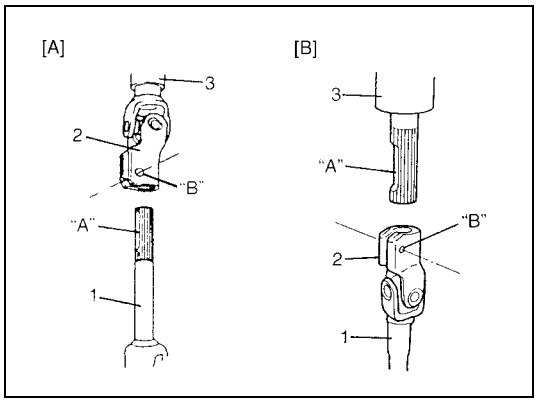

2) Connect steering column to lower shaft.
For power steering, align flat part "A" of lower shaft (1) with bolt hole "B" of upper joint (2) as shown. Then insert upper joint (2) onto lower shaft (1).
For manual steering, align flat part "A" of steering column (3) with bolt hole "B" of upper joint (2) and insert steering column shaft into upper joint (2) of lower shaft (1).

[A]: Power steering
[B]: Manual steering

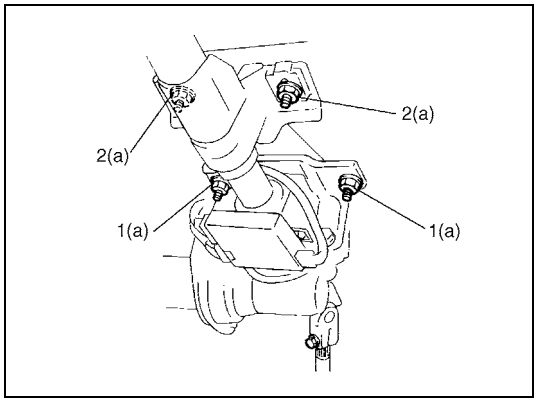

3) Install steering column assembly to lower and upper brackets. Torque steering column lower nuts (1) first and then upper nuts (2) to specifications as given below.

Tightening torque

Steering column nut (a): 14 N·m (1.4 kg-m, 10.5 lb-ft)

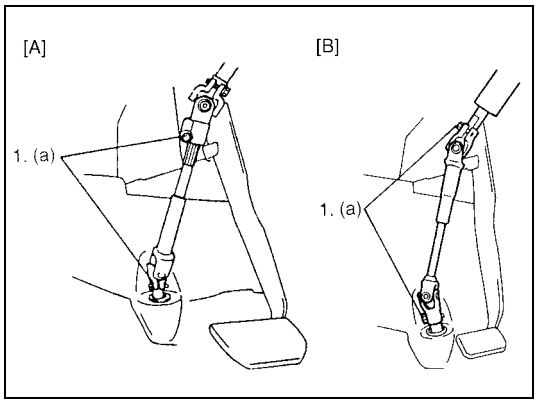

4) Install bolt (1) to steering shaft upper joint and tighten it to specified torque.

CAUTION:
After tightening column nuts, tighten steering shaft upper joint bolt. Otherwise shaft joint bearing is damaged.

Tightening torque
Steering shaft upper joint bolt
(a): 28 N·m (2.8 kg-m, 20.5 lb-ft)

[A]:	Power steering
[B]:	Manual steering

5) Install ignition switch assembly and immobilizer control module to steering column.

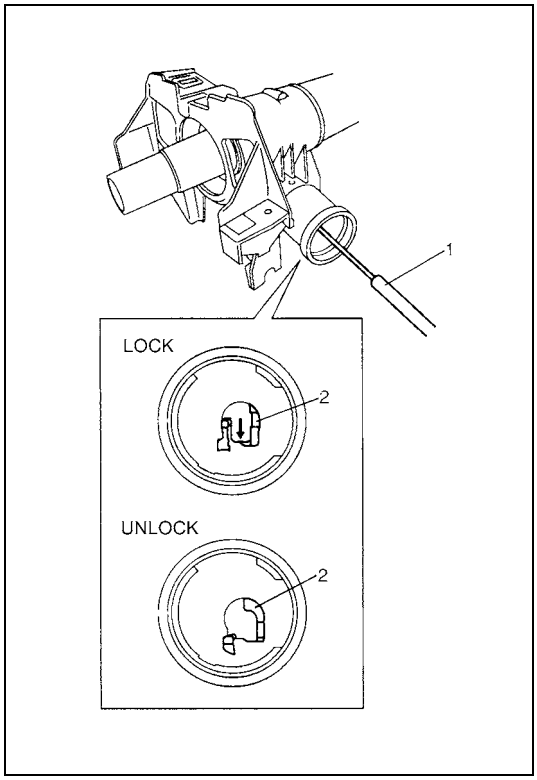

6) Install ignition switch cylinder assembly as follows.
   a) Push steering lock (2) down till it clicks, using screw driver (1), so that it is at unlock position.
   b) Turn ignition key of ignition switch cylinder assembly to "ACC" position.
   c) In this state, push ignition switch cylinder assembly into steering column till it clicks.
7) Install turn & dimmer switch, wiper switch and ignition switch protector to steering column.
8) Connect all connectors that have been removed in "Removal".
9) Install contact coil cable assembly and steering wheel refer to "Contact Coil Cable Assembly Removal and Installation" and "Steering Wheel Removal and Installation" in this section.
10) Connect negative battery cable.
11) Enable air bag system referring to "Enabling air bag system" in section 10B.

Steering Column Inspection

Check steering column for damage and operation referring to "Checking Steering Column For Accident Damage" in this section.

Steering Lower Shaft Removal and Installation

REMOVAL

1) Turn steering wheel so that vehicle's front tires are at straight-ahead position.
2) Turn ignition switch to "LOCK" position and remove key.

CAUTION:
Never turn steering wheel while steering lower shaft is removed. Should it have been turned and contact coil have got out of its centered position, it needs to be centered again. Also, turning steering wheel more than about two and a half turns will break contact coil.

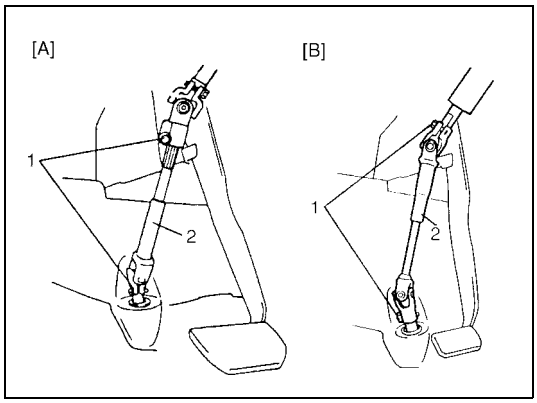

3) Remove steering shaft joint bolts (1) and then remove steering lower shaft (2).

[A]: Power steering
[B]: Manual steering

INSTALLATION

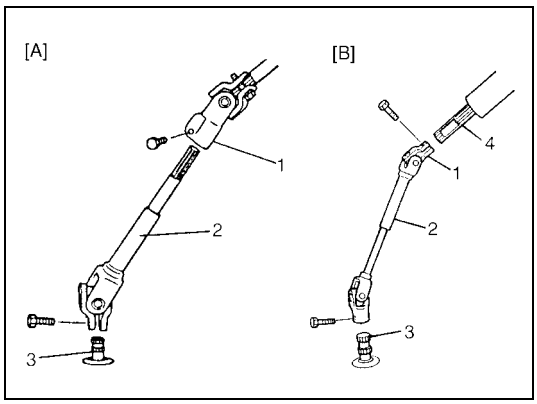

1) Align flat part of steering lower shaft (2) or steering column (4) with bolt hole of upper joint (1) as shown. Then insert lower shaft or steering column into upper joint.
2) Be sure that front wheels and steering wheel are in straightforward state and insert lower joint into steering pinion shaft (3).

[A]: Power steering
[B]: Manual steering

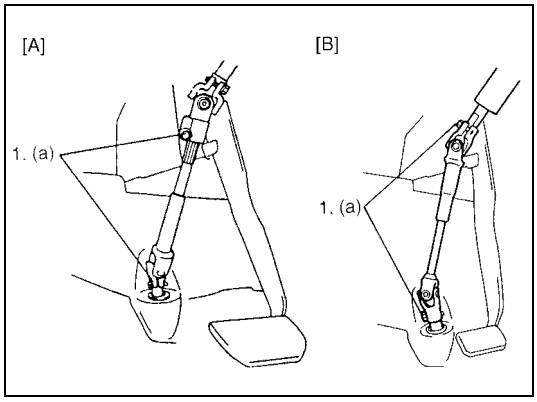

3) Tighten steering shaft joint bolts (1) to specification (lower side first and then upper side).

Tightening torque
Steering shaft joint bolt (a): 28 N·m (2.8 kg-m, 20.5 lb-ft)

[A]: Power steering
[B]: Manual steering

Checking Steering Column For Accident Damage

NOTE:
Vehicles involved in accidents resulting in body damage, where steering column has been impacted or air bag deployed, may have a damaged or misaligned steering column.

CHECKING PROCEDURE

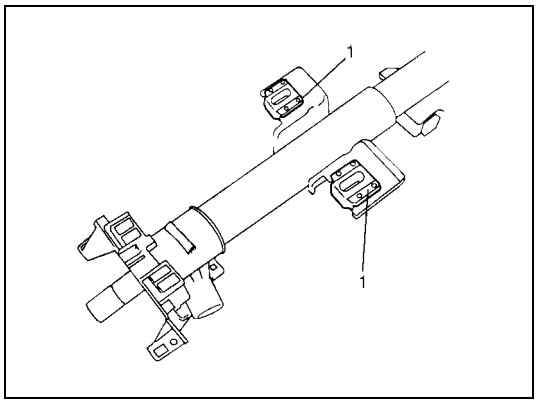

1) Check that two capsules (1) are attached to steering column bracket securely. If found loose, replace steering column assembly.

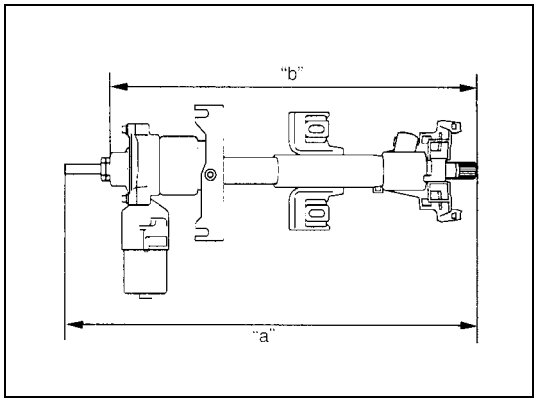

2) Take measurement "a" and "b" as shown. If it is shorter than specified length, replace column assembly with new one.

Power steering column length
"a": 520 ± 1.5 mm (20.5 ± 0.06 in.)
"b": 475.5 ± 1.5 mm (18.7 ± 0.06 in.)
Manual steering column length
"a": 508 ± 1.5 mm (20.0 ± 0.06 in.)
"b": 440 ± 1.5 mm (17.3 ± 0.06 in.)

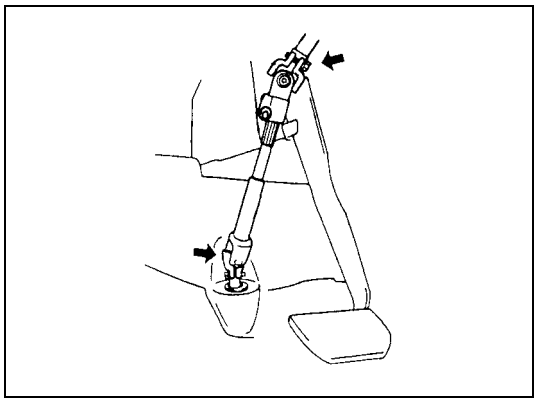

3) Check steering shaft joints and shaft for any damages such as crack, breakage, malfunction or excessive play. If anything is found faulty, replace as lower joint assembly or column assembly.

4) Check steering shaft for smooth rotation. If found defective, replace as column assembly.
5) Check steering shaft and column for bend, cracks or deformation. If found defective, replace.

Required Service Material

Material	Recommended SUZUKI product (Part Number)	Use
Thread lock cement	THREAD LOCK CEMENT1342 (99000-32050)	• Steering shaft bolt

Special Tool

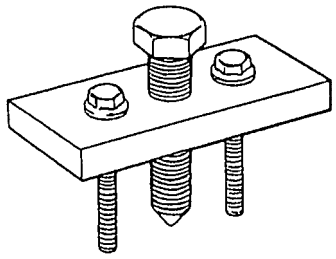

09944-36011
Steering wheel remover

SECTION 3D

FRONT SUSPENSION

NOTE:

- **All front suspension fasteners are an important attaching part in that it could affect the performance of vital parts and systems, and/or could result in major repair expense. They must be replaced with one of the same part number or with an equivalent part if replacement becomes necessary. Do not use a replacement part of lesser quality or substitute design. Torque values must be used as specified during reassembly to assure proper retention of this part.**
- **Never attempt to heat, quench or straighten any front suspension part. Replace it with a new part or damage to the part may result.**

CONTENTS

General Description 3D-2
Front Suspension Construction 3D-2
Diagnosis 3D-3
Diagnosis Table 3D-3
Stabilizer Bar and Bushing Check 3D-3
Strut Assembly Check 3D-4
Suspension Control Arm / Steering Knuckle Check 3D-4
Suspension Control Arm Joint Check 3D-5
Front Suspension Fasteners Check 3D-5
Wheel Disc, Bolt and Bearing Check 3D-5
On-Vehicle Service 3D-6
Strut Assembly Component 3D-6
Strut Assembly Removal and Installation 3D-7
Strut Assembly Disassembly and Assembly 3D-8
Stabilizer Bar and Bushings Component 3D-10
Stabilizer Bar and Bushings Removal and Installation 3D-10
Wheel Hub and Steering Knuckle Component 3D-12
Wheel Hub and Steering Knuckle Removal and Installation 3D-12
Wheel Hub and Steering Knuckle Disassembly and Assembly 3D-16
Suspension Control Arm / Bushing Removal and Installation 3D-18
Suspension Control Arm / Bushing Disassembly and Assembly 3D-19
Tightening Torque Specifications 3D-20
Required Service Material 3D-20
Special Tool 3D-21

General Description

Front Suspension Construction

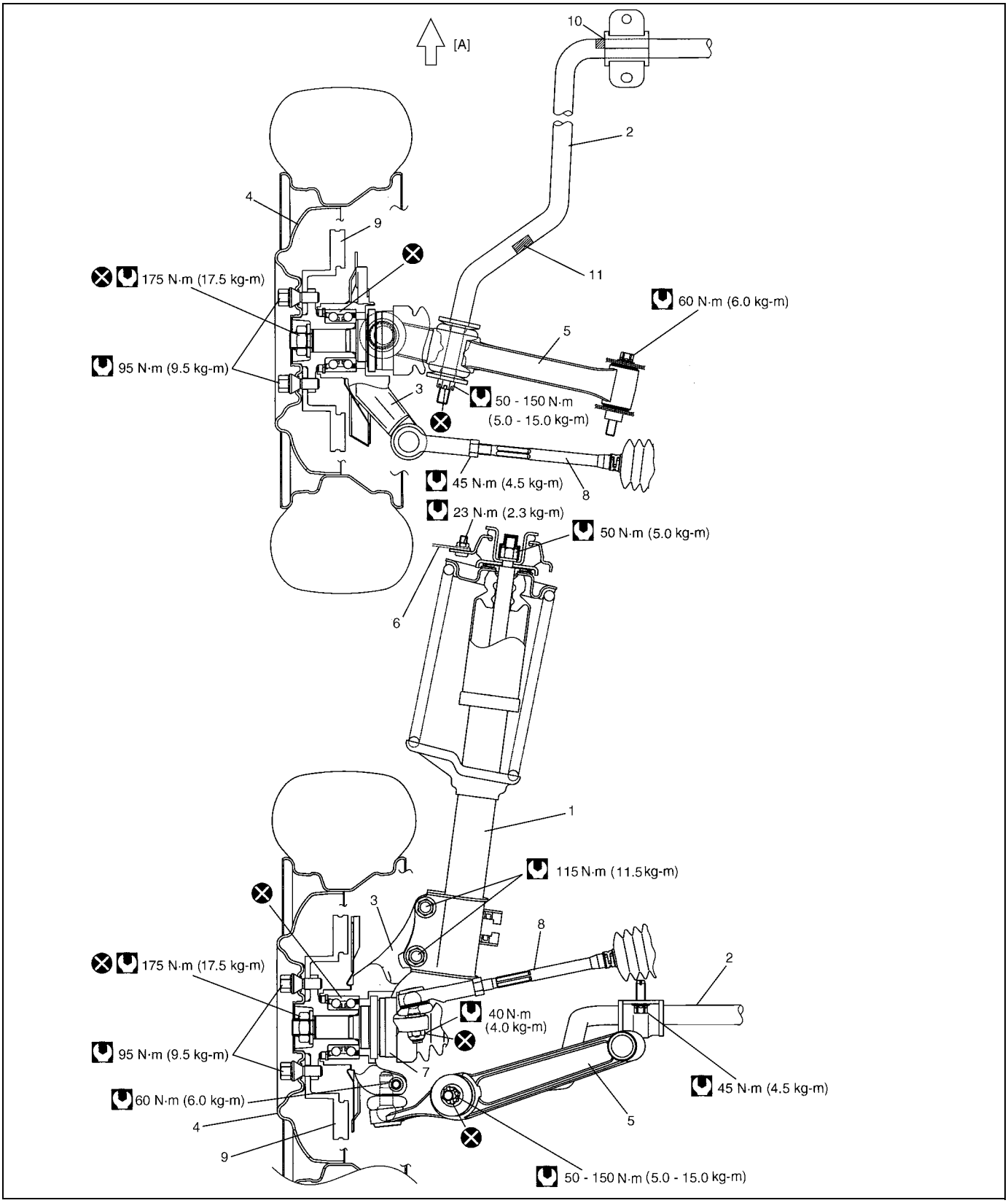

1. Strut assembly	4. Wheel	7. Drive shaft	10. Paint mark	Tightening torque
2. Stabilizer bar	5. Suspension control arm	8. Tie rod	11. Paint mark (only RH side)	Do not reuse.
3. Steering knuckle	6. Vehicle body	9. Brake disc	[A] : Forward	

Diagnosis

Diagnosis Table

Refer to “Diagnosis Table” in Section 3.

Stabilizer Bar and Bushing Check

Bar

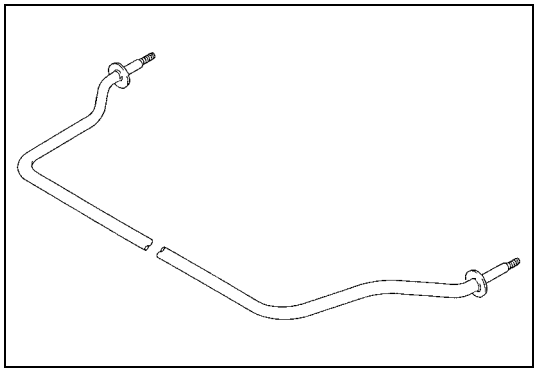

Inspect for damage or deformation.
If defective, replace.

Bushing

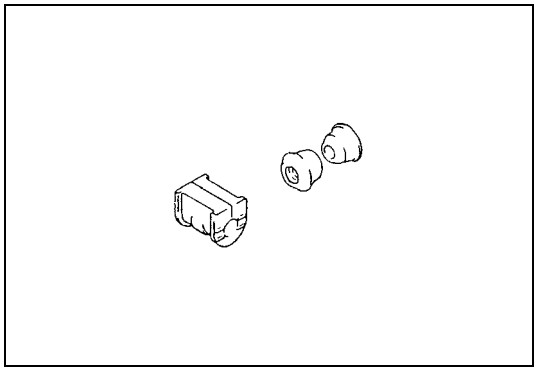

Inspect for damage, wear or deterioration.
If defective, replace.

Strut Assembly Check

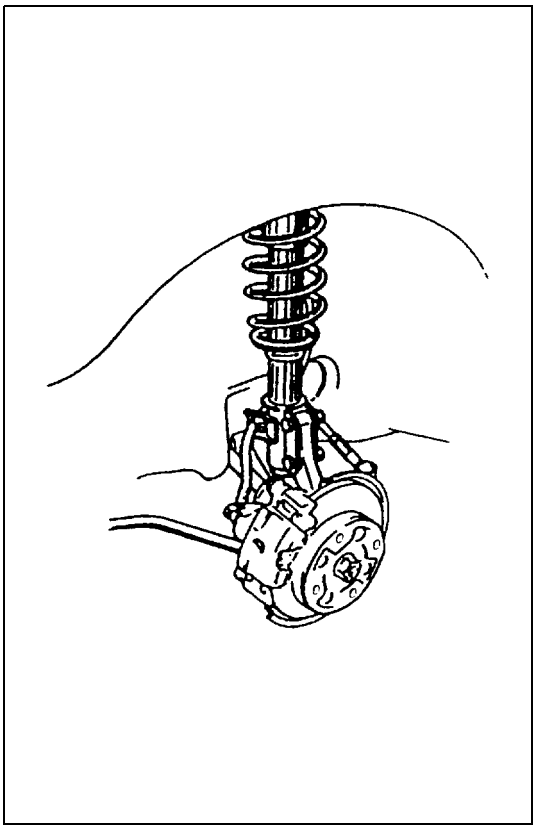

- Inspect strut for oil leakage, damage or deformation.
- If strut is found faulty, replace it as an assembly unit, because it can not be disassembled.
- Inspect strut function refer to the following procedures.

1) Check and adjust tire pressures as specified.
2) Bounce vehicle body 3 or 4 times continuously by pushing front end on the side with strut to be checked.
3) Apply the same amount of force at each push and note strut resistance both when pushed and rebounding.
4) Also, note how many times vehicle body rebounds before coming to stop after hands are off. Do the same for strut on the other side.
5) Compare strut resistance and number of rebound on the right with those on the left. And they must be equal in both. With proper strut, vehicle body should come to stop the moment hands are off or after only one or two small rebounds.

If conditions of struts are in doubt, compare them with known-good vehicle or strut.

- Inspect bearing for wear, abnormal noise or gripping.
  If defective, replace.
- Inspect spring seat for cracks or deformation.
  If defective, replace.
- Inspect bump stopper for deterioration.
  If defective, replace.
- Inspect rebound stopper and strut mount for wear, cracks or deformation.
  If defective, replace.

Suspension Control Arm / Steering Knuckle Check

Steering Knuckle

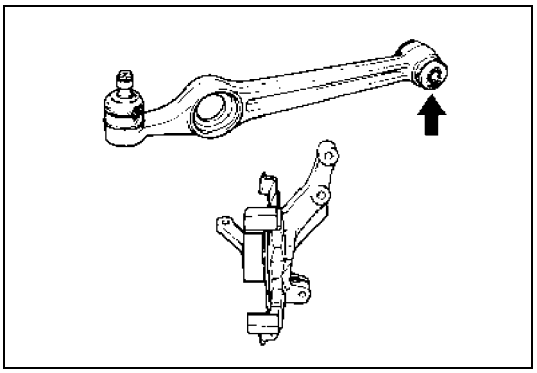

Inspect for cracks, deformation or damage.
If defective, replace.

Suspension Control Arm / bushing

Inspect for damage, wear or deterioration.
If defective, replace.

Suspension Control Arm Joint Check

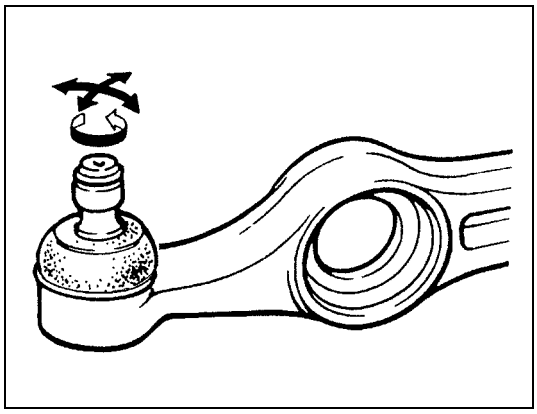

- Check for smooth rotation.
- Inspect ball stud for damage.
- Inspect dust cover for damage.
- Inspect for play in ball joint. If found defective, replace.

NOTE:

Suspension control arm and arm joint cannot be separated.

If there is any damage to either, control arm assembly must be replaced as a complete unit.

Front Suspension Fasteners Check

Check each bolt and nut fastening suspension parts for tightness. Tighten loose one, if any, to specified torque, referring to "General Description" in this section.

Wheel Disc, Bolt and Bearing Check

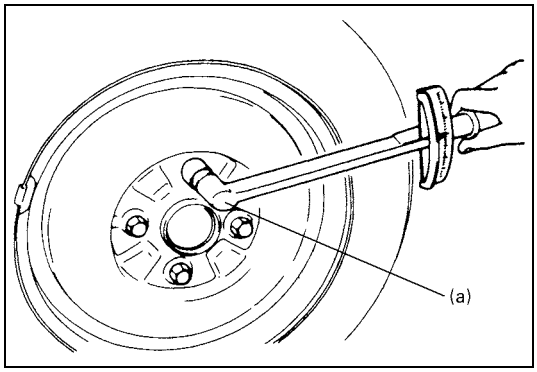

- Inspect each wheel disc for dents, distortion and cracks. A disc in badly damaged condition must be replaced.
- Check wheel bolts for tightness and, as necessary, retighten them to specification.

Tightening torque
Wheel bolt (a): 95 N·m (9.5 kg-m, 69.0 lb-ft)

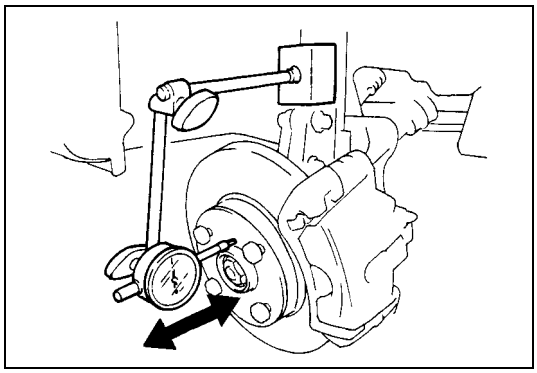

- Check wheel bearing for wear.

a) Remove wheel, referring to "Wheel Removal and Installation" in Section 3F.
b) Fix brake disc tightening wheel bolts.
c) Set a dial gauge.
d) Check wheel bearing for thrust play.
When measurement exceeds limit, replace bearing.

Thrust play limit:
0.1 mm (0.004 in.)

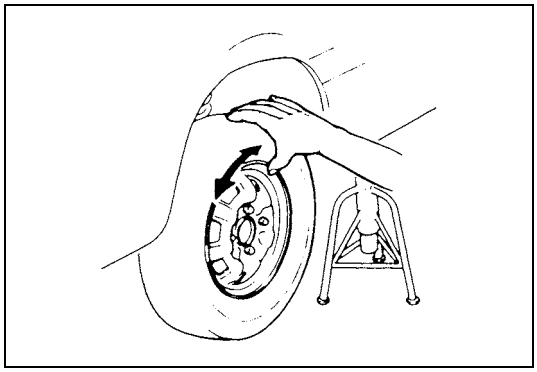

- By rotating wheel actually, check wheel bearing for noise and smooth rotation.
If defective, replace bearing.

On-Vehicle Service

Strut Assembly Component

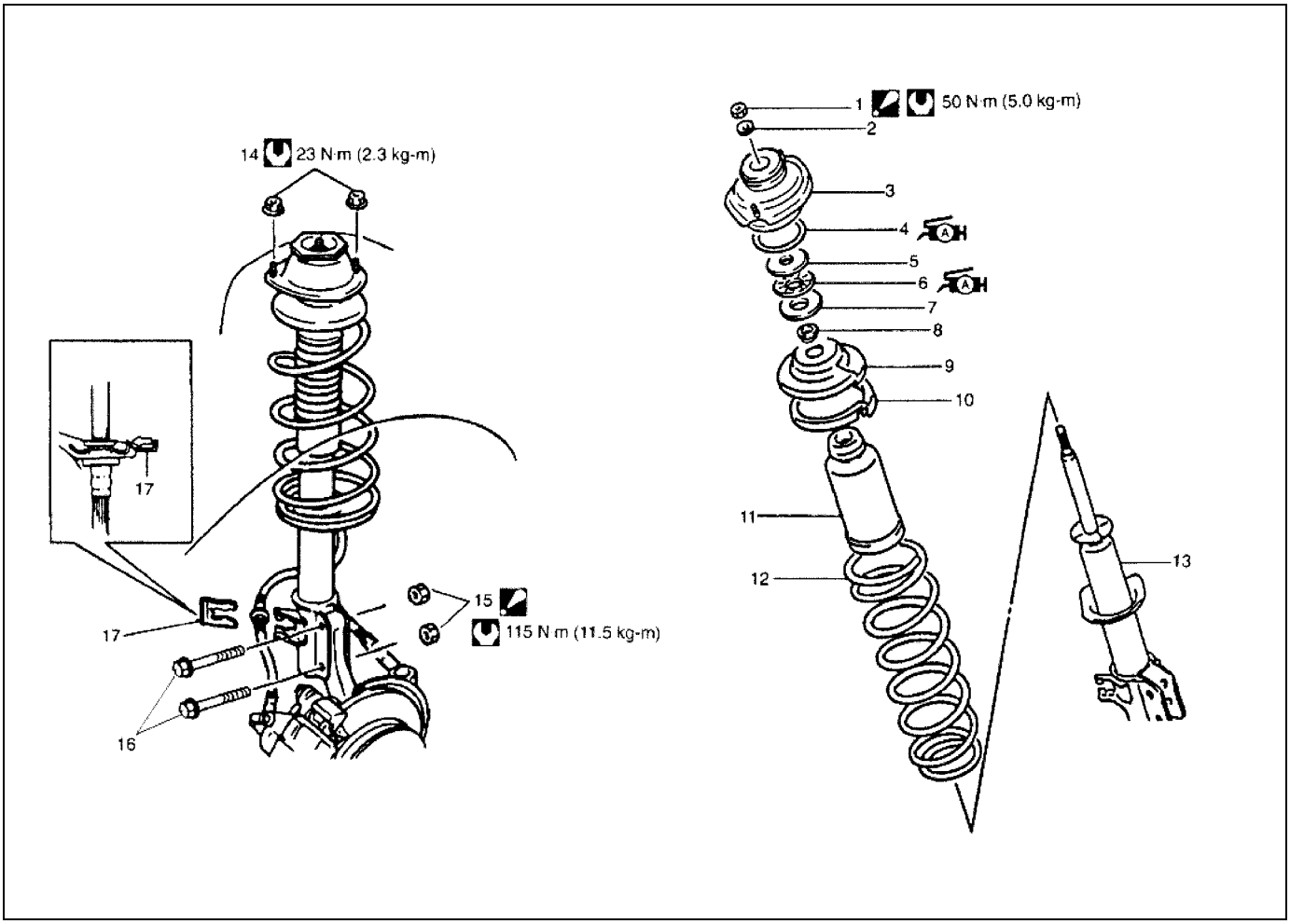

	1. Strut nut: Apply water-proof coating (paint or lacquer) all around nut and strut rod screw part.	8. Bearing spacer	14. Strut support nut.
	2. Strut lock washer	9. Coil spring upper seat	15. Strut bracket nut
	3. Strut support	10. Coil spring seat	16. Strut bracket bolt
	4. Bearing seal: Apply SUZUKI SUPER GREASE A 99000-25010	11. Bump stopper	17. E-ring
	5. Bearing upper washer	11-1. Strut dust cover	Tightening torque
	6. Strut bearing: Apply SUZUKI SUPER GREASE A (99000-25010) to all around bearing.	12. Coil spring	
	7. Bearing lower washer	13. Shock absorber	

Strut Assembly Removal and Installation

REMOVAL

1) Disconnect negative cable at battery.

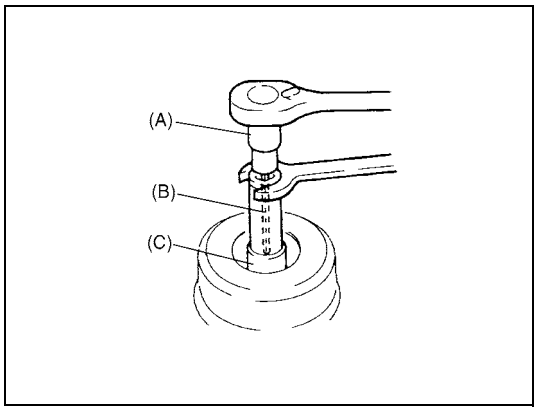

NOTE:

When disassembling strut assembly, loosen strut nut a little before removing strut assembly from vehicle. This will make disassembly easier. Note, however, nut must not be removed at this point.

Special tool
(A): 09900-00411
(B): 09900-00414
(C): 09945-26010

2) Hoist vehicle, allowing front suspension to hang free.
3) Remove wheel, referring to “Wheel Removal and Installation” in Section 3F.

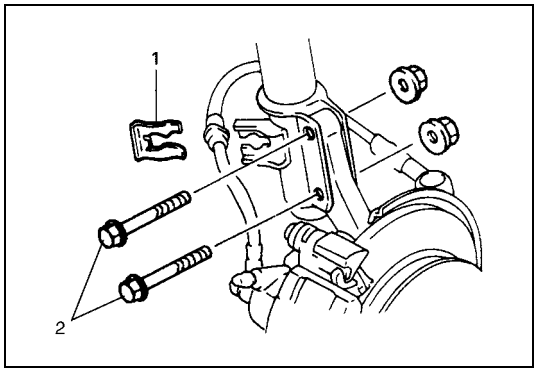

4) Remove E-ring (1) securing brake hose and take brake hose off strut bracket as shown.
5) Remove ABS wheel speed sensor harness clamp bolt from strut (if equipped).
6) Remove strut bracket bolts (2).

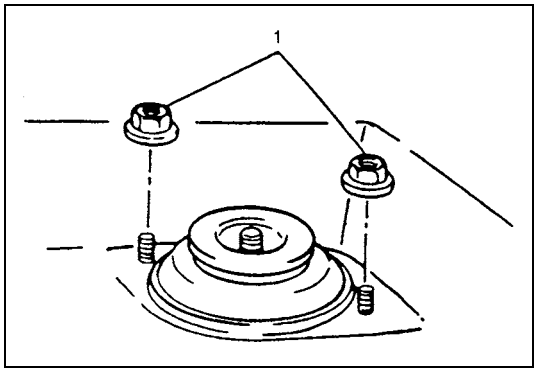

7) Remove strut support nuts (1).

NOTE:

Hold strut by hand so that it will not fall off.

8) Remove strut assembly.

INSTALLATION

Install strut assembly by reversing removal procedure, noting the following instructions.

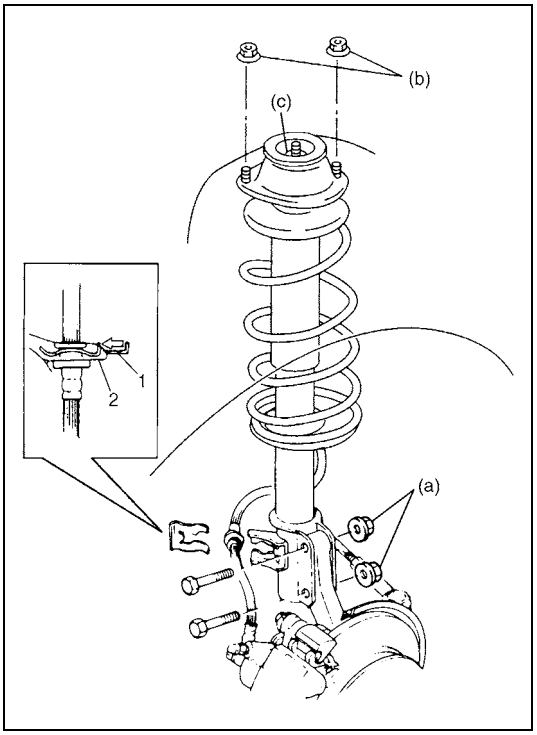

- Insert bolts in such direction as shown in figure.
- Tighten all fasteners to specified torque.

Tightening torque
Strut bracket nut (a): 115 N·m (11.5 kg-m, 83.0 lb-ft)
Strut support nut (b): 23 N·m (2.3 kg-m, 17.0 lb-ft)
Strut nut (c): 50 N·m (5.0 kg-m, 36.5 lb-ft)

CAUTION:
- **Don't twist brake hose when installing it.**
- **Install E-ring (1) as far as it fits to bracket (2) as shown in figure.**

- Tighten wheel bolts to specified torque.

Tightening torque
Wheel bolt: 95 N·m (9.5 kg-m, 69.0 lb-ft)

- After installation, confirm front wheel alignment referring to "Preliminary checks prior to adjusting front alignment" in Section 3A.

Strut Assembly Disassembly and Assembly

DISASSEMBLY

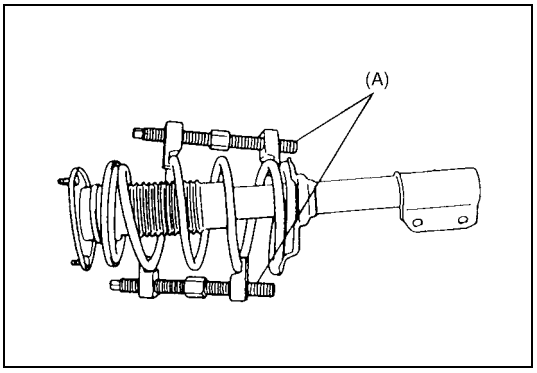

1) With special tool (A) placed to spring as shown, turn special tool bolts alternately until spring tension is released. Whether it is released or not can be known by whether strut turns lightly while strut spring is held stationary.

Special tool
(A): 09940-71431

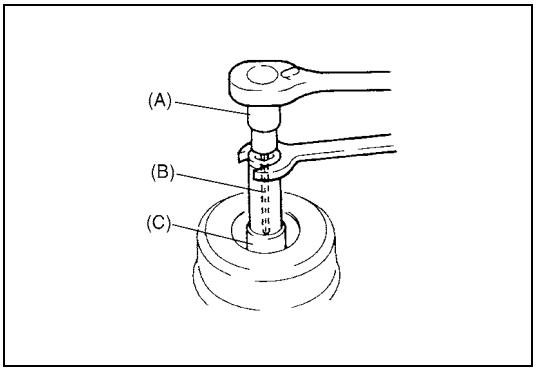

2) Remove strut nut with special tools while coil spring is compressed.

Special tool
(A) : 09900-00411
(B) : 09900-00414
(C) : 09945-26010

3) Disassemble strut assembly.

ASSEMBLY

For assembly, reverse disassembly procedure, noting the following instructions.

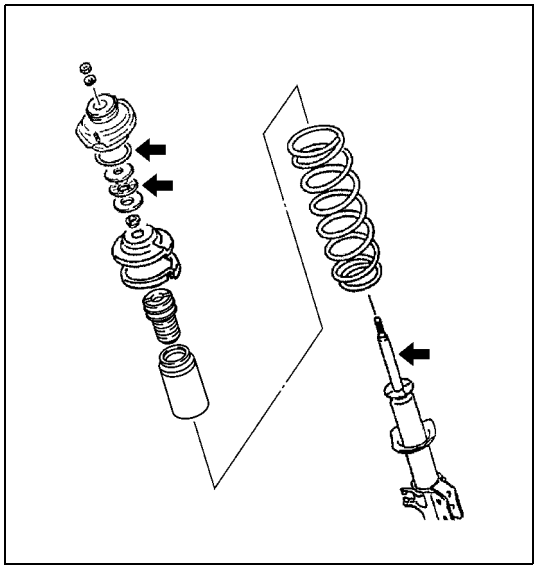

- Apply grease to bearing seal, strut bearing and sliding part of strut rod.

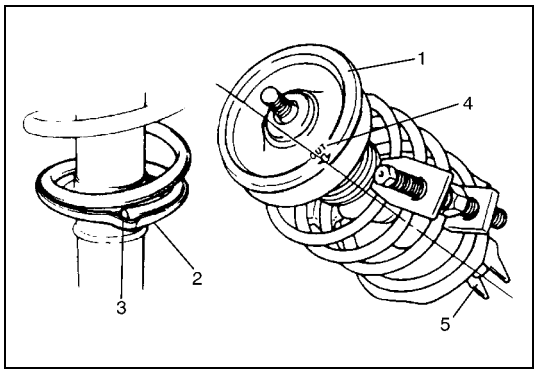

- Mate spring end with stepped part (3) of spring lower seat (2) as shown.
- Install spring seat on coil spring and then spring upper seat (1) aligning “OUT” mark (4) on spring upper seat and center of strut bracket (5).
- Install bearing spacer, bearing, bearing seal, strut support and strut unit in this sequence.

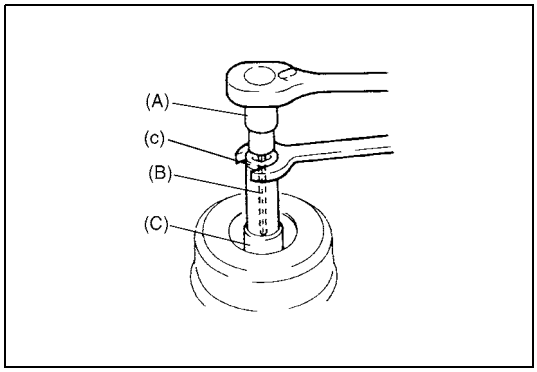

- Tighten strut nut temporarily at this step.

Special tool
(A) : 09900-00411
(B) : 09900-00414
(C) : 09945-26010

Stabilizer Bar and Bushings Component

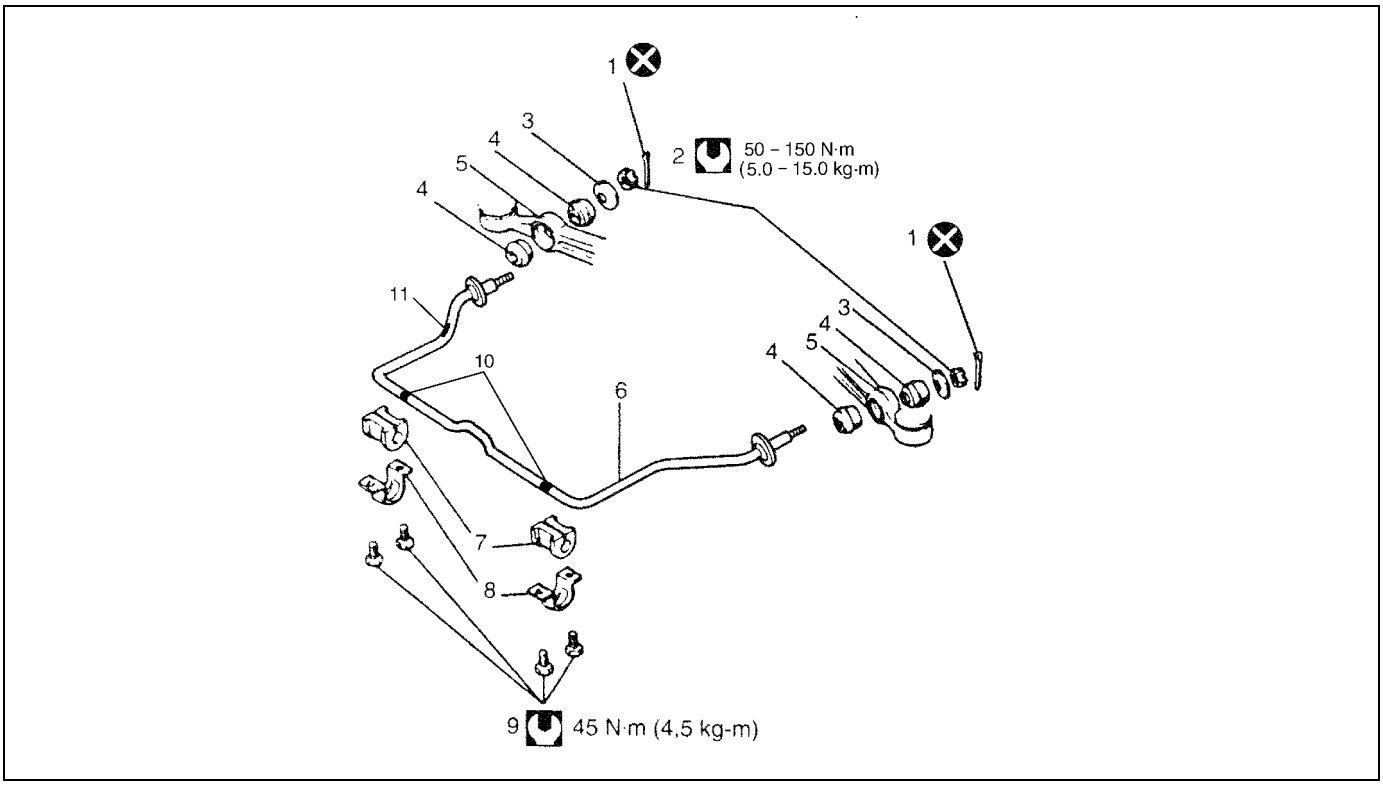

1. Split pin	5. Control arm	9. Stabilizer bar mounting bracket bolt	Tightening torque
2. Stabilizer bar nut	6. Stabilizer bar	10. Paint mark	Do not reuse.
3. Washer	7. Mount bushing	11. Paint mark (RH side)	
4. Bushing	8. Mount bracket: Oblong hole side comes to the rear.		

Stabilizer Bar and Bushings Removal and Installation

REMOVAL

1) Hoist vehicle and allow front suspension control arms to hang free.
2) Remove front wheels, referring to “Wheel Removal and Installation” in Section 3F.

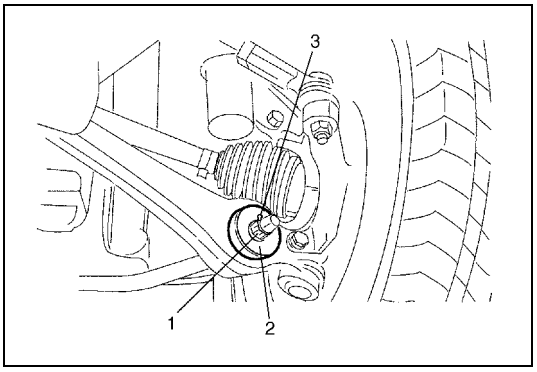

3) Remove stabilizer bar split pins (3), nuts (1) and washers (2).

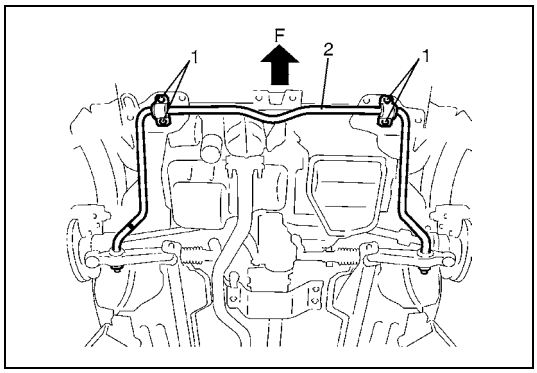

4) Remove stabilizer bar mounting bracket bolts (1).
5) Remove stabilizer bar (2).

NOTE:

If it is hard to remove stabilizer bar, set tires in contact with ground (with suspension compressed).

F. Forward

INSTALLATION

For installation, reverse removal procedure, noting the following instructions.

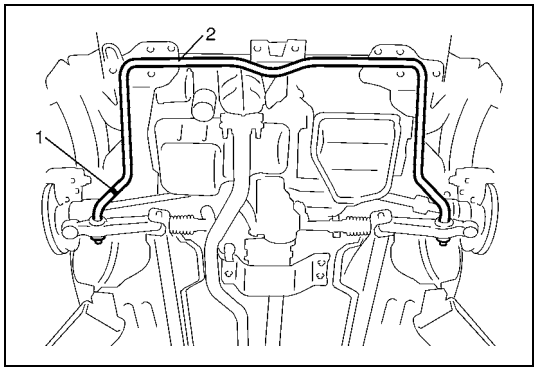

- Install stabilizer bar (2) so that paint mark (1) on it comes to the right side of vehicle.

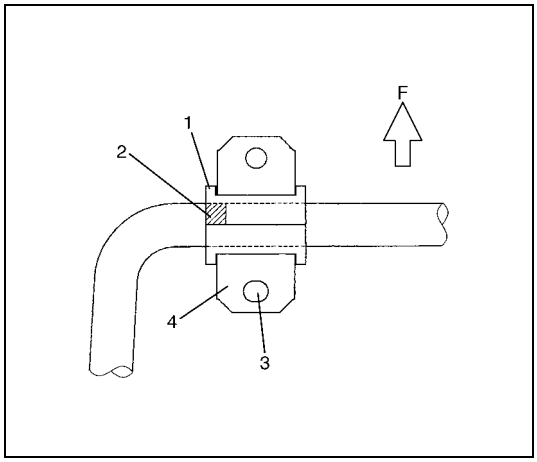

- Align the outside edge (1) of mount bushing with the outside edge (2) of paint mark as shown in figure.
- Install mount brackets (4) so that its oblong hole side (3) comes to the rear.

F: Forward

- Tighten stabilizer bar mounting bracket bolts to specified torque.

Tightening torque
Stabilizer bar mounting bracket bolt:
45 N·m (4.5 kg-m, 32.5 lb-ft)

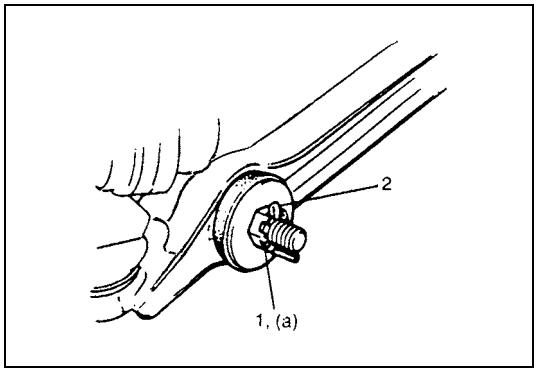

- Tighten stabilizer bar nuts (1) to specified torque.

Tightening torque
Stabilizer bar nut
(a): 50 – 150 N·m (5.0 – 15.0 kg-m, 36.5 – 108.0 lb-ft)

- Install new split pins (2) as shown.
- Tighten wheel bolts to specified torque.

Tightening torque
Wheel bolt: 95 N·m (9.5 kg-m, 69.0 lb-ft)

Wheel Hub and Steering Knuckle Component

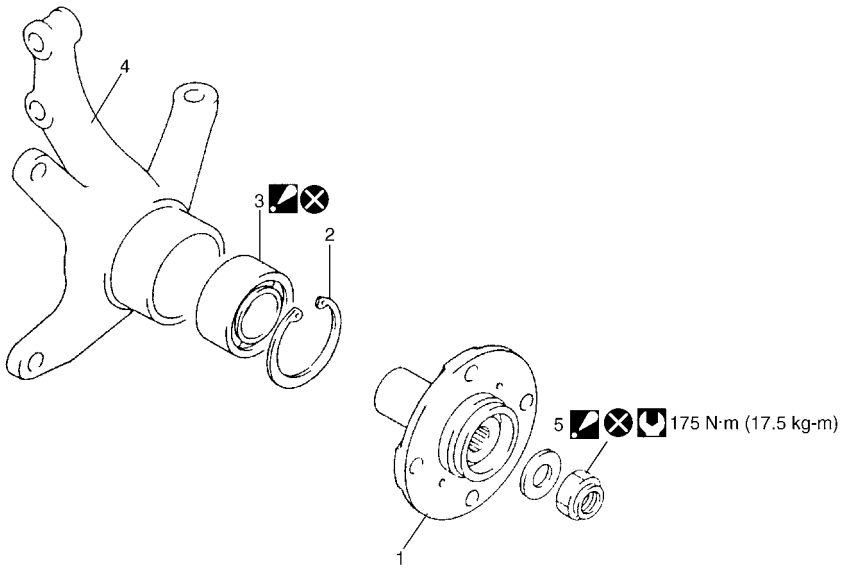

	1. Front wheel hub		4. Steering knuckle		Tightening torque
	2. Circlip		5. Drive shaft nut : Calk, after tightening.		Do not reuse.
	3. Wheel bearing : Face grooved rubber seal side to wheel hub.				

Wheel Hub and Steering Knuckle Removal and Installation

REMOVAL

1) Hoist vehicle and remove wheel, referring to “Wheel Removal and Installation” in Section 3F.

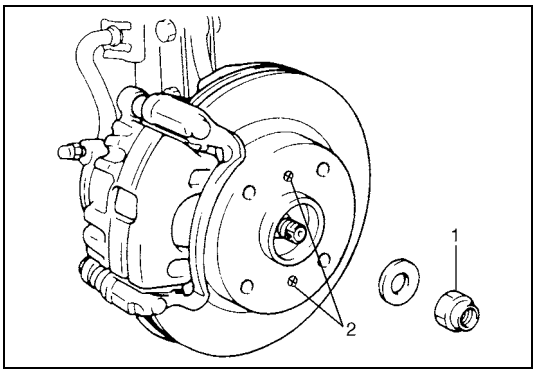

2) Uncaulk drive shaft nut (1).
3) Depress foot brake pedal and hold it there. Remove drive shaft nut (1).
4) Remove brake disc screws (2) and caliper carrier bolts.

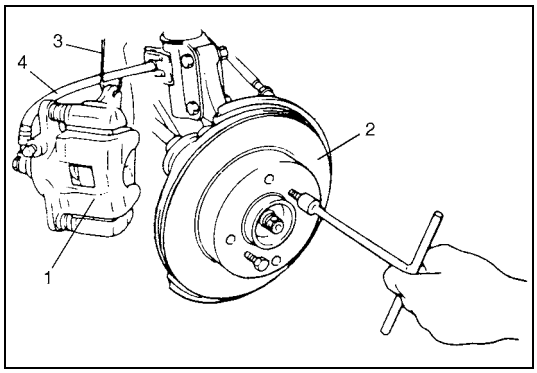

5) Remove caliper (1) with carrier.

NOTE:

Hang removed caliper with a wire hook or the like (3) so as to prevent brake hose (4) from bending and twisting excessively or being pulled.
Don't operate brake pedal with pads removed.

6) Pull brake disc (2) off by using two 8 mm bolts.

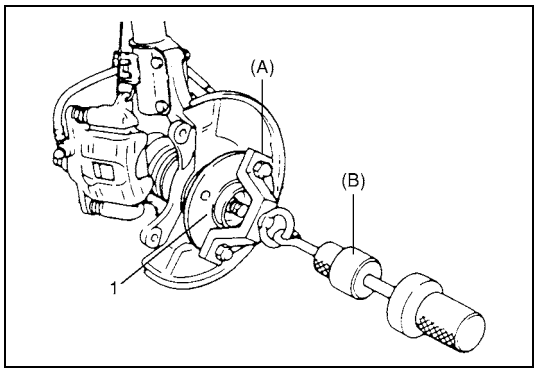

7) Pull out wheel hub (1) with special tools.

Special tool
(A): 09943-17912
(B): 09942-15511

CAUTION:
When wheel hub is removed, replace wheel bearing as a set.

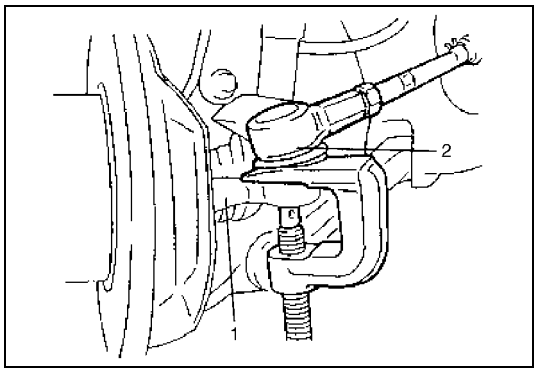

8) Disconnect tie rod end (2) from steering knuckle (1) with puller.

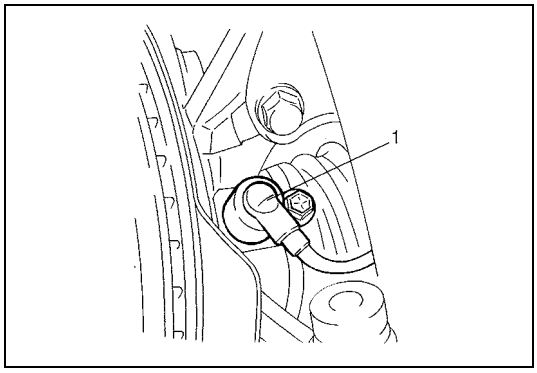

9) Remove wheel speed sensor (1) from knuckle (if equipped with ABS).

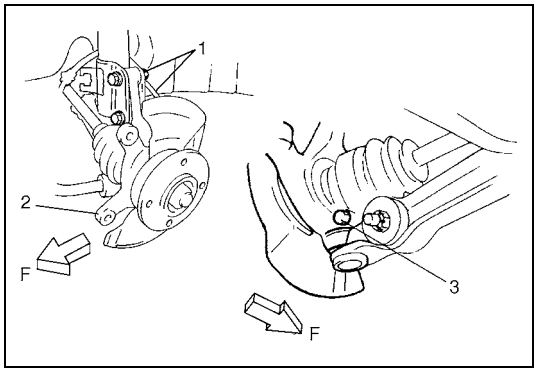

10) Loosen strut bracket nuts (1).

F: Forward

11) Remove ball joint bolt (3).
12) Remove strut bracket bolts from strut bracket and then steering knuckle (2).

INSTALLATION

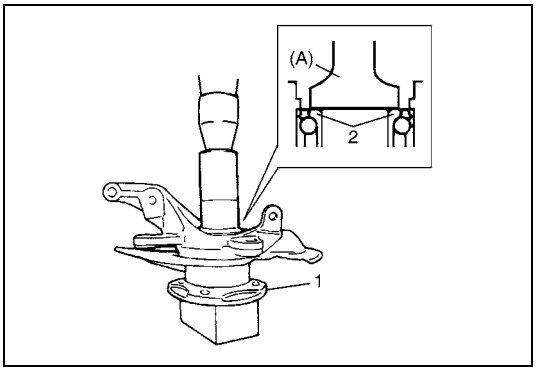

1) Using special tool and hydraulic press, press-fit wheel hub (1) into wheel bearing (2) (Face grooved rubber seal side to wheel hub).

Special tool
(A): 09913-75810

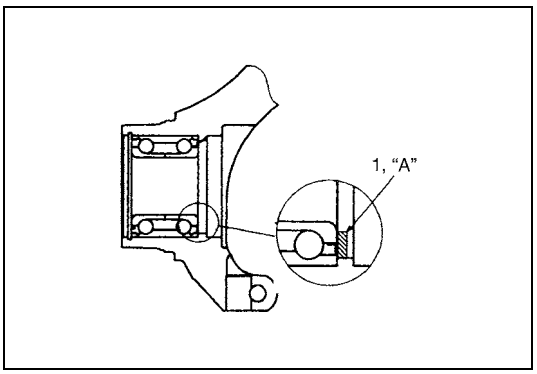

2) Apply grease lightly to contact part (1) of wheel bearing and drive shaft.

"A": Grease 99000-25050

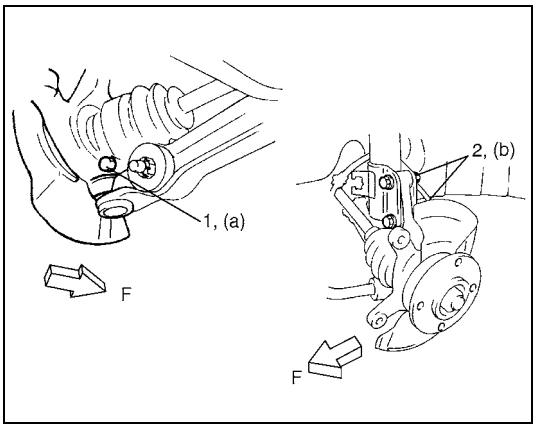

3) Install ball joint bolt (1) from the direction as shown.
4) Tighten suspension arm ball joint bolt (1) to specified torque.

Tightening torque
Suspension arm ball joint bolt
(a): 60 N·m (6.0 kg-m, 43.5 lb-ft)

5) Tighten strut bracket nuts (2) to specified torque.

Tightening torque
Strut bracket nut (b): 115 N·m (11.5 kg-m, 83.0 lb-ft)

F: Forward

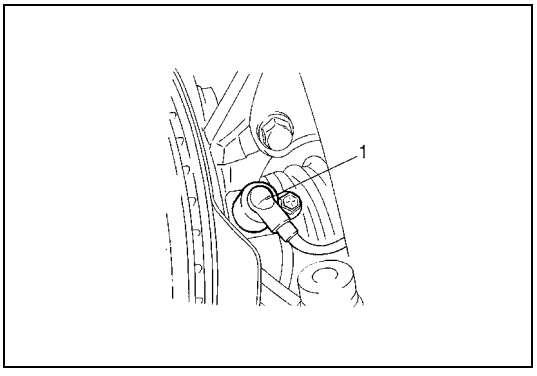

6) Install wheel speed sensor (1) (if equipped with ABS).

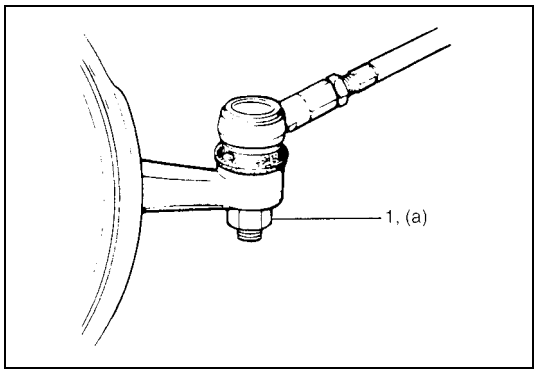

7) Connect tie rod end to steering knuckle, install new tie rod end nut and tighten nut (1) to specified torque.

Tightening torque
The rod end nut (a): 40 N·m (4.0 kg-m, 29.0 lb-ft)

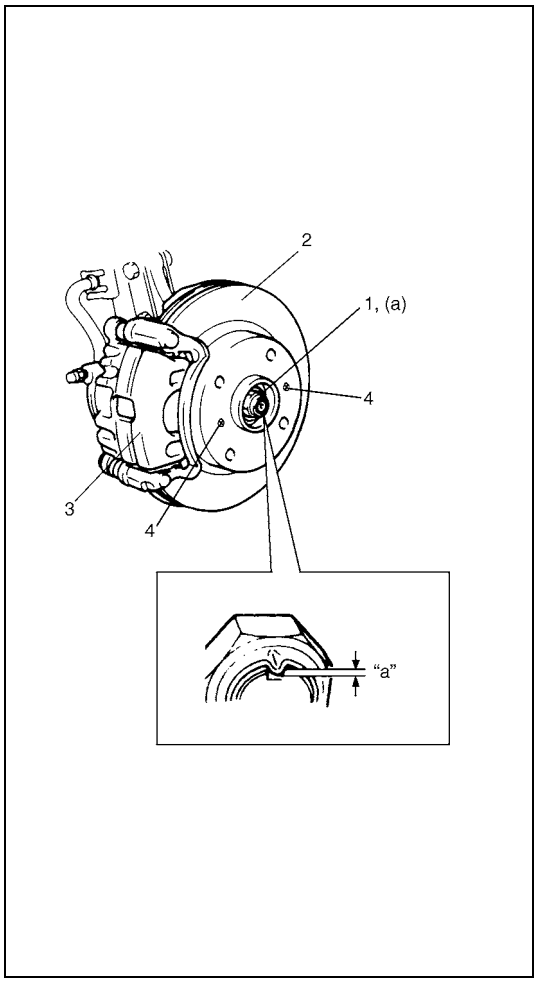

8) Install brake disc (2) and brake caliper (3).
9) Tighten brake disc screws (4) and brake caliper bolt to specified torque.

Tightening torque
Brake disc screw: 9 N·m (0.9 kg-m, 6.5 lb-ft)
Brake caliper bolt: 95 N·m (9.5 kg-m, 69.0 lb-ft)

10) Depress foot brake pedal and hold it there.
Tighten new drive shaft nut (1) to specified torque.

Tightening torque
Drive shaft nut (a): 175 N·m (17.5 kg-m, 127.0 lb-ft)

CAUTION:
Never reuse drive shaft nut (1).

11) Caulk drive shaft nut (1) as shown.

Caulking specification "a": 0.5 mm (0.02 in.) or more

CAUTION:
Be careful while caulking nut so that no crack will occur in caulked part of nut. Cracked nut must be replaced with new one.

12) Tightening wheel bolts to specified torque.

Tightening torque
Wheel bolt: 95 N·m (9.5 kg-m, 69.0 lb-ft)

Wheel Hub and Steering Knuckle Disassembly and Assembly

DISASSEMBLY

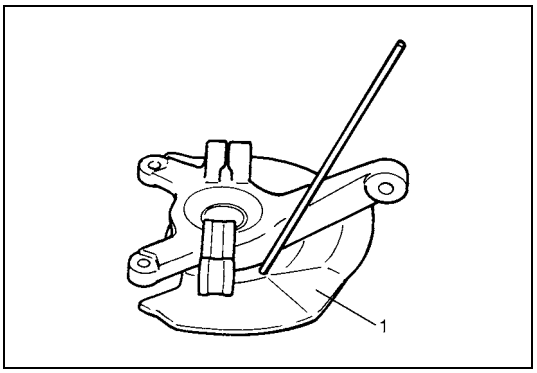

1) Uncaulk and remove dust cover (1).
2) Remove wheel bearing circlip.

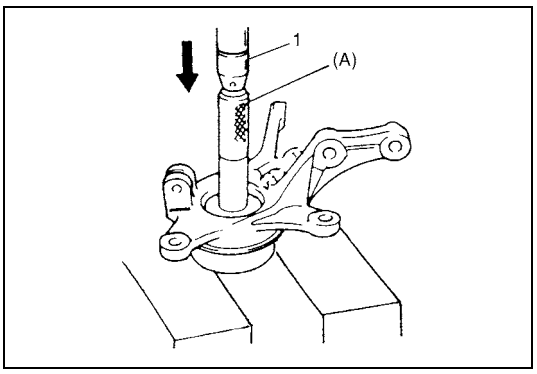

3) Remove wheel bearing using hydraulic press (1) and special tool.

Special tool
(A): 09913-75520

CAUTION:
When installing wheel bearing, replace it with new one.

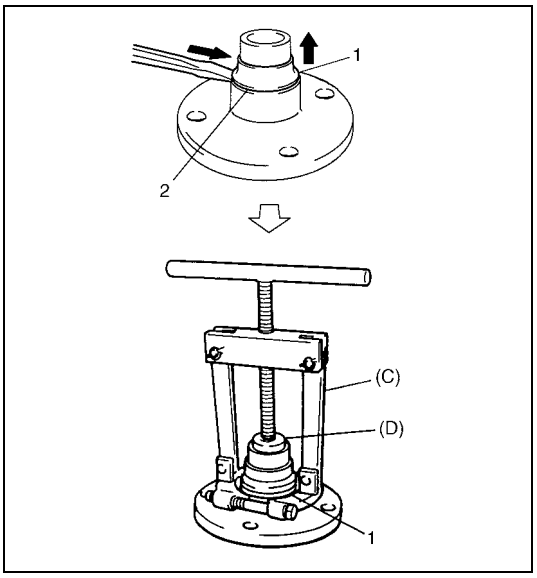

4) Remove wheel bearing outside inner race (1) as shown by hammering lightly at 3 locations around it so as not to cause damage to seating part (2) of wheel hub.

Special tool
(C): 09913-65810
(D): 09926-37610-003

ASSEMBLY

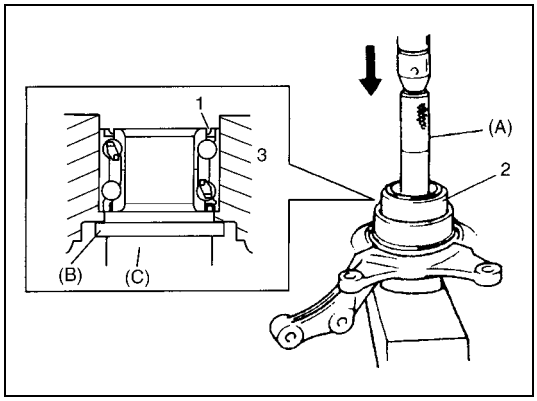

1) Face rubber seal side (1) of new wheel bearing (2) upward as shown in figure and press-fit it into knuckle (3) using special tools.

Special tool
(A): 09913-75510
(B): 09926-68310
(C): 09951-18210

CAUTION:
When replacing bearing, inner races or outer race, be sure to replace them with new ones as a set.

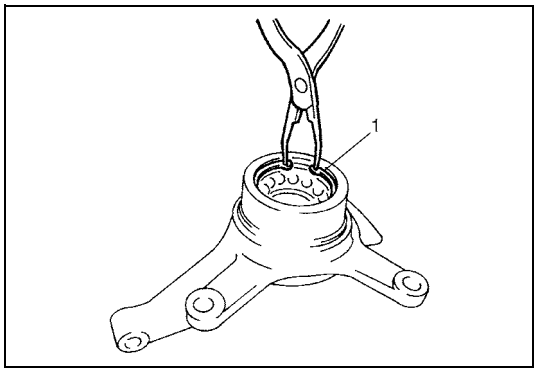

2) Install wheel bearing circlip (1).

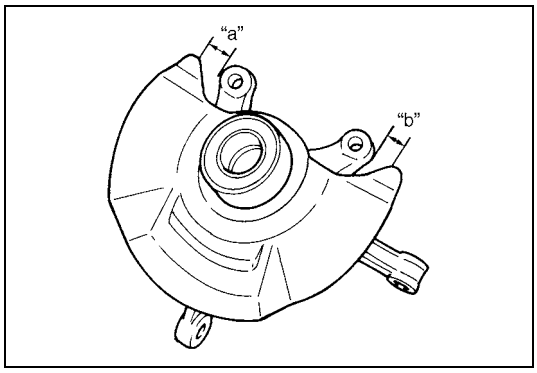

3) Drive in dust cover so that dimensions "a" and "b" become equal as shown in figure.

CAUTION:
When drive in dust cover, be careful not to deform it.

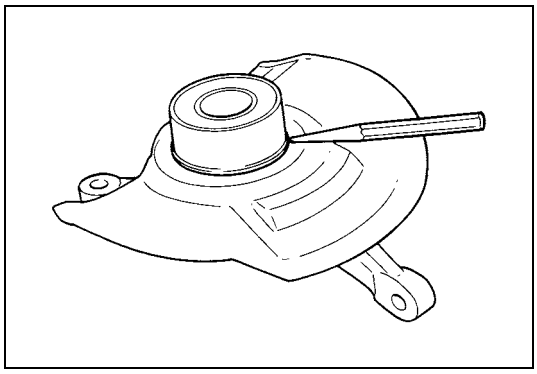

4) Caulk with a punch.

Suspension Control Arm / Bushing Removal and Installation

REMOVAL

1) Remove stabilizer bar refer to “Stabilizer Bar and Bushings Removal and Installation” in this section.

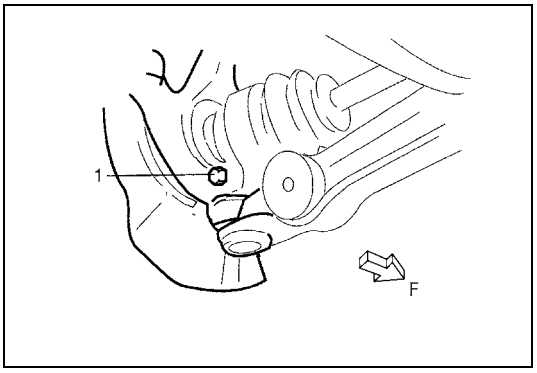

2) Remove suspension control arm ball joint bolt (1).

F: Forward

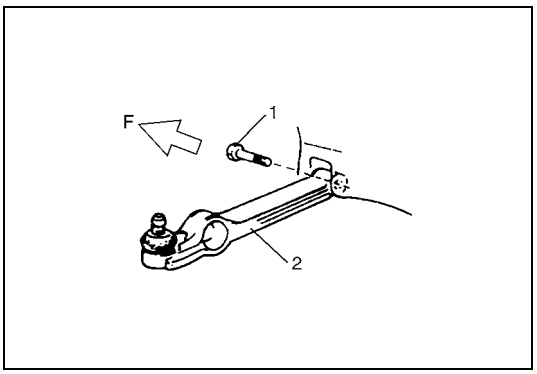

3) Remove suspension control arm bolt and washer (1).
4) Remove suspension control arm (2).

F: Forward

INSTALLATION

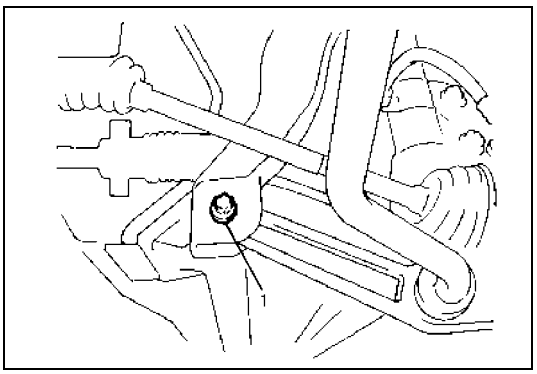

1) Install body side of suspension control arm but tighten suspension control arm bolt and washer (1) only temporarily.

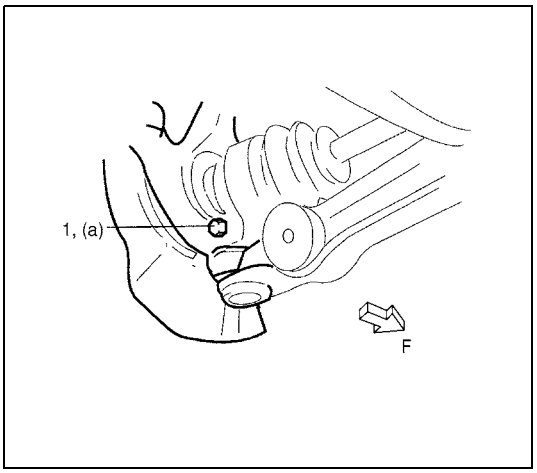

2) Install suspension control arm ball joint to steering knuckle. Align ball stud groove with steering knuckle bolt hole. Then install ball joint bolt (1) from the direction as shown in figure. Tighten suspension arm ball joint bolt (1) to specified torque.

Tightening torque
Suspension arm ball joint bolt
(a): 60 N·m (6.0 kg-m, 43.5 lb-ft)

3) Install stabilizer bar, referring to “Stabilizer Bar and Bushings Removal and Installation” in this section.

F: Forward

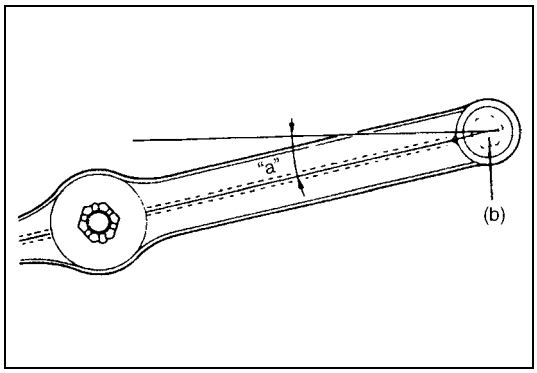

4) Lower hoist and vehicle in non-loaded condition, tighten control arm bolt to specified torque at the position where control arm is installed at angle "a" as shown below.

Angle "a": 15 ° ± 5 °

Tightening torque
Control arm bolt (b): 60 N·m (6.0 kg-m, 43.5 lb-ft)
Control arm member bolt: 60 N·m (6.0 kg-m, 43.5 lb-ft)

5) Confirm front wheel alignment referring to "Front Wheel Alignment Inspection and Adjustment" in Section 3A.

Suspension Control Arm / Bushing Disassembly and Assembly

DISASSEMBLY

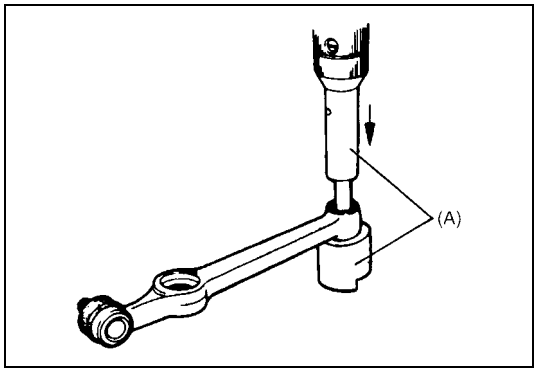

1) Remove bushing.
Place suspension control arm onto flat surface side of special tool and push out bushing with special tool and oil hydraulic press as shown.

Special tool
(A) : 09943-77910

ASSEMBLY

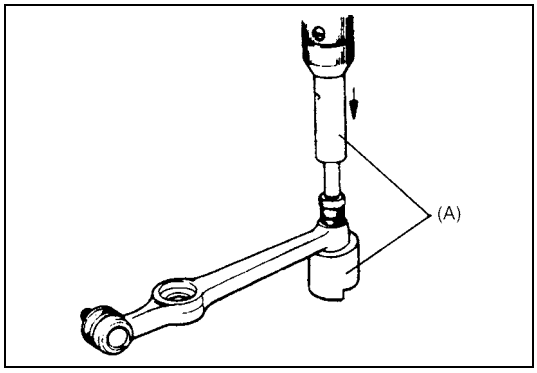

1) Press-fit bushing by using special tool and press.

Special tool
(A) : 09943-77910

CAUTION:
Be sure to use new bushing.

NOTE:

- **Before installing bushing, apply soap water on its circumference to facilitate installation.**
- **When installed, bush should be equal on the right and left of arm as shown.**

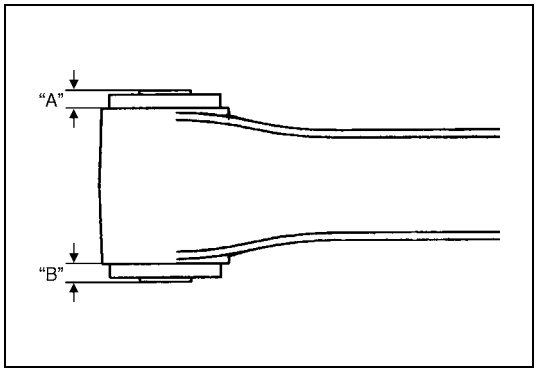

2) Press-fit bushing so that dimensions "A" and "B" in figure become equal.

Tightening Torque Specifications

Fastening part	Tightening torque		
	N•m	kg-m	lb-ft
Brake caliper bolt	95	9.5	69.0
Brake disc screw	9	0.9	6.5
Control arm bolt	60	6.0	43.5
Control arm member bolt	60	6.0	43.5
Drive shaft nut	175	17.5	127.0
Stabilizer bar mounting bracket bolt	45	4.5	32.5
Stabilizer bar nut	50 – 150	5.0 – 15.0	36.5 – 108.0
Strut bracket nut	115	11.5	83.0
Strut nut	50	5.0	36.5
Strut support nut	23	2.3	17.0
Suspension arm ball joint bolt	60	6.0	43.5
The rod end nut	40	4.0	29.0
Control arm crossmember bolt	60	6.0	43.5
Wheel bolt	95	9.5	69.0

Required Service Material

Material	Recommended SUZUKI product (Part Number)	Use
Lithium grease	SUZUKI SUPER GREASE A (99000-25010)	• Strut bearing
Lithium grease	SUPER GREASE E (99000-25050)	• Mating surfaces of wheel bearing and CV joint

Special Tool

 09900-00411 Hexagon wrench socket	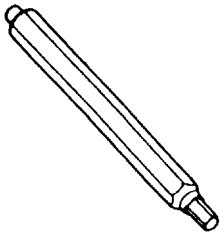 09900-00414 Hexagon wrench bit 6 mm	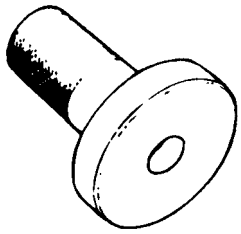 09913-75520 Bearing installer	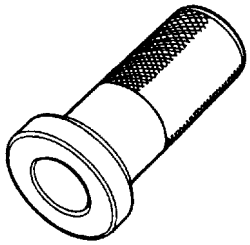 09913-75810 Bearing installer
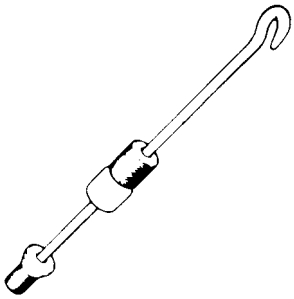 09942-15511 Sliding hammer	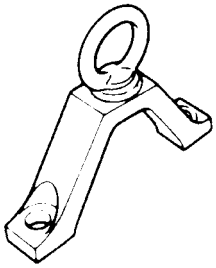 09943-17912 Front wheel hub remover	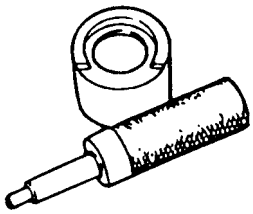 09943-77910 Bushing remover	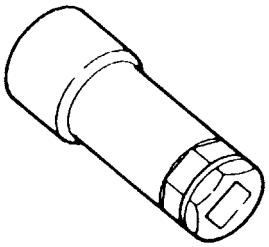 09945-26010 Socket wrench 17 mm
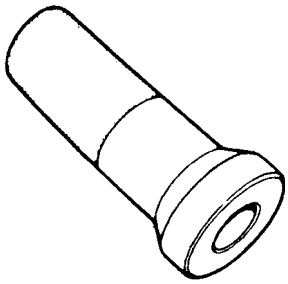 09913-75510 Bearing installer	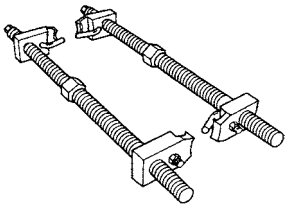 09940-71431 Spring compressor	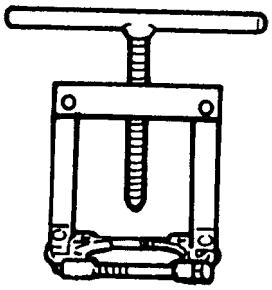 09913-65810 Bearing puller	 09926-37610-003 Bearing puller attachment
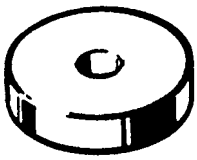 09926-68310 Bevel pinion bearing installer	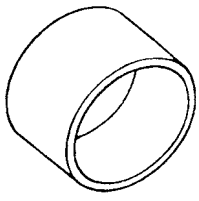 09951-18210 Remover booster body oil No.2		

SECTION 3E

REAR SUSPENSION

NOTE:

- **All suspension fasteners are an important attaching part in that it could affect the performance of vital parts and systems, and/or could result in major repair expense. They must be replaced with one of the same part number or with an equivalent part if replacement becomes necessary. Do not use a replacement part of lesser quality or substitute design. Torque values must be used as specified during reassembly to assure proper retention of this part.**
- **Never attempt to heat, quench or straighten any suspension part. Replace it with a new part, or damage to the part may result.**

CONTENTS

General Description 3E-2
Rear Suspension Component Locator 3E-2
Rear Suspension Construction 3E-4
Diagnosis 3E-6
Rear Shock Absorber Check 3E-6
Trailing Arm, Lateral Rod, Rear Axle, Rear Axle (Housing) and Coil Spring Check 3E-6
Bump Stopper / spring Upper Seat Check 3E-7
Rear Suspension Fasteners 3E-7
Wheel Disc, Bolt and Bearing Check 3E-7
On-vehicle Service 3E-8
Lateral Rod Removal and Installation 3E-8
Rear Shock Absorber Removal and Installation 3E-9
Coil Spring Removal and Installation 3E-9
Bump Stopper Removal and Installation 3E-12
Spring Upper Seat Removal and Installation 3E-13
Trailing Arm Removal and Installation 3E-13
Rear Axle Removal and Installation (for 2WD Model) 3E-16
Wheel Bearing Removal and Installation (for 2WD Model) 3E-22
Rear Axle Shaft and Wheel Bearing Removal and Installation (for 4WD Model) 3E-24
Rear Axle Shaft Oil Seal Removal and Installation (for 4WD Model) 3E-28
Rear Axle Housing Removal and Installation (for 4WD Model) 3E-29
Tightening Torque Specifications 3E-34
Required Service Material 3E-35
Special Tool 3E-36

General Description

Rear Suspension Component Locator

2WD model

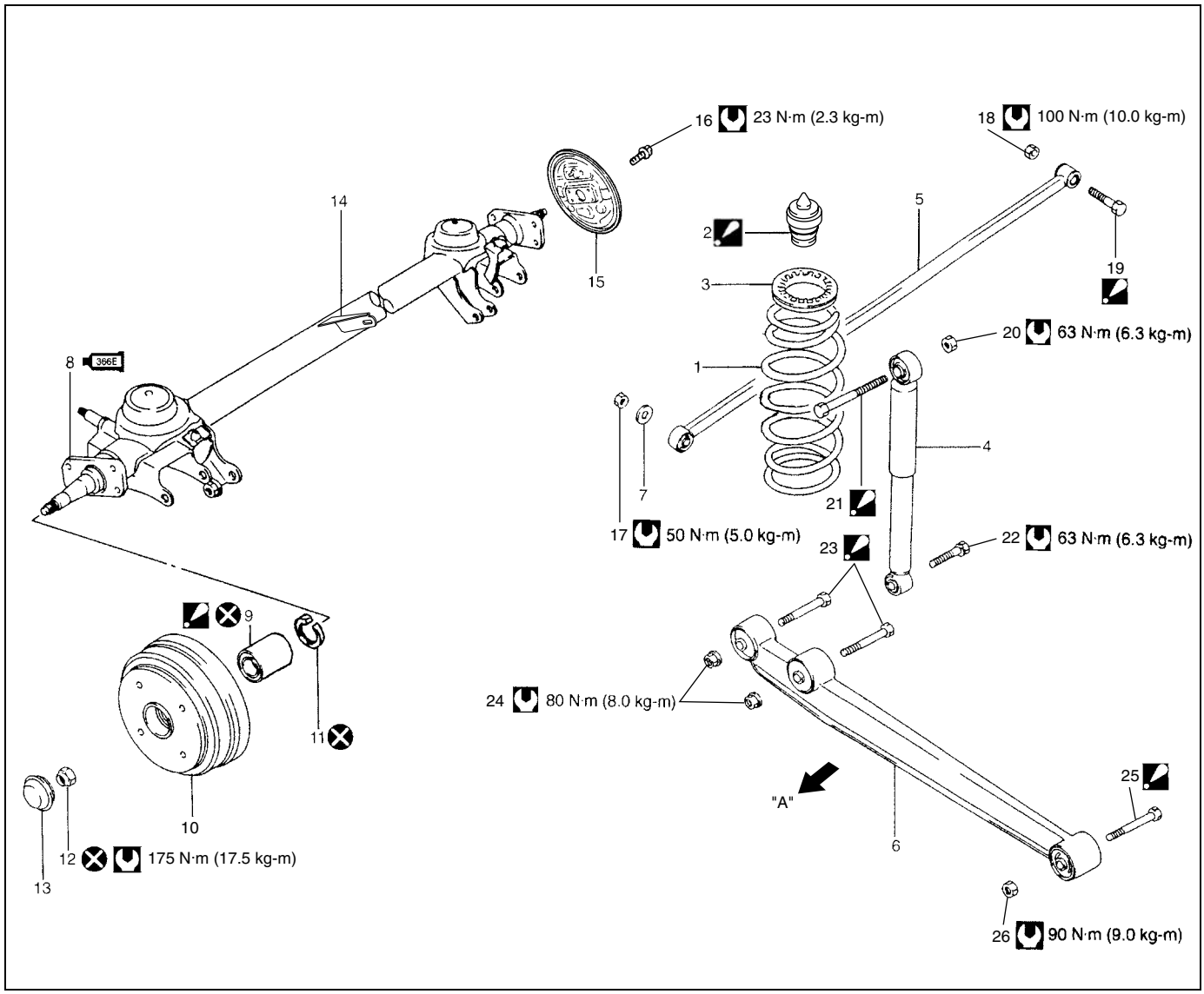

"A": Body outside	366E 8. Rear axle	16. Brake back plate bolt	24. Trailing arm rear nut
1. Rear coil spring	9. Bearing :Seal side of bearing comes brake back plate side.	17. Lateral rod axle housing side nut	25. Trailing arm front bolt :Insert from vehicle inside.
2. Rear bump stopper :Apply soap water, when installing.	10. Brake drum	18. Lateral rod body side nut	26. Trailing arm front nut
3. Rear spring upper seat	11. Circlip	19. Lateral rod bolt :Insert from the direction as shown.	Tightening torque
4. Rear shock absorber	12. Spindle nut	20. Rear shock absorber upper nut	Do not reuse
5. Lateral rod	13. Spindle cap	21. Rear shock absorber upper bolt :Insert from vehicle outside.	
6. Trailing arm	14. LSPV bracket (only vehicle with LSPV)	22. Rear shock absorber lower bolt	
7. Lateral rod outer washer	15. Brake back plate	23. Trailing arm rear bolt :Insert from vehicle inside.	

4WD model

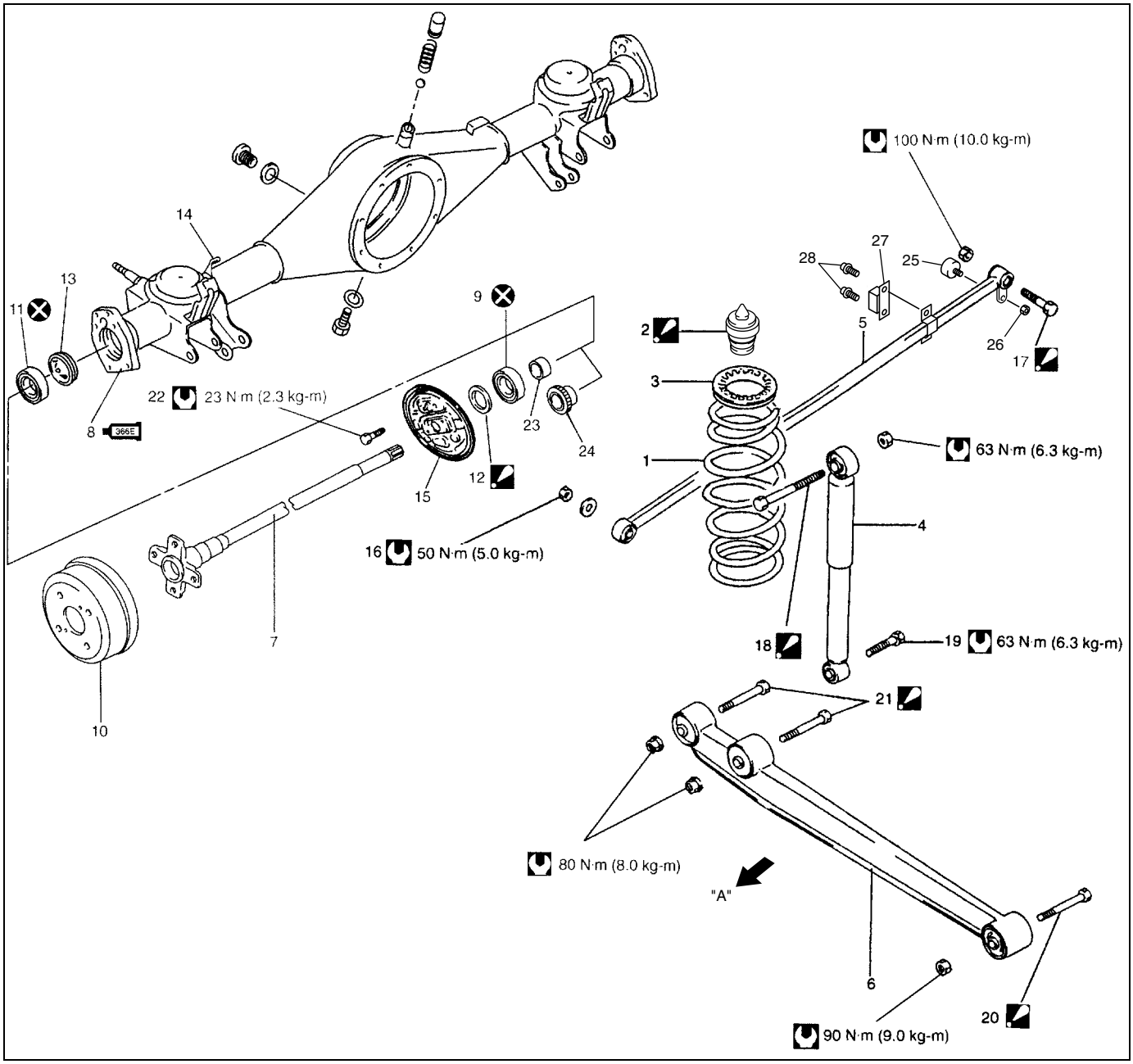

"A": Body outside	11. Oil seal	22. Brake back plate bolt
1. Rear coil spring	12. Spacer : The tapered side of spacer inner diameter directed toward outside (brake drum side).	23. Bearing retainer ring (without ABS)
2. Rear bump stopper : Apply soap water, when installing.	13. Oil seal protector	24. Bearing retainer ring (with ABS)
3. Rear spring upper seat	14. LSPV bracket (only vehicle with LSPV)	25. Lateral rod dumper
4. Rear shock absorber	15. Brake back plate	26. Lateral rod dumper nut
5. Lateral rod	16. Lateral rod axle housing side nut	27. Lateral rod dumper
6. Trailing arm	17. Lateral rod body side bolt : Insert from the direction as shown.	28. Lateral rod dumper bolt
7. Rear axle shaft	18. Shock absorber upper bolt : Insert from vehicle outside.	Tightening torque
366E 8. Rear axle housing : Apply water tight sealant 99000-31090 to joint of plate and axle housing.	19. Shock absorber lower bolt	Do not reuse
9. Bearing	20. Trailing arm front bolt : Insert from vehicle inside.	
10. Brake drum	21. Trailing arm rear bolt : Insert from vehicle inside.	

Rear Suspension Construction

2WD model

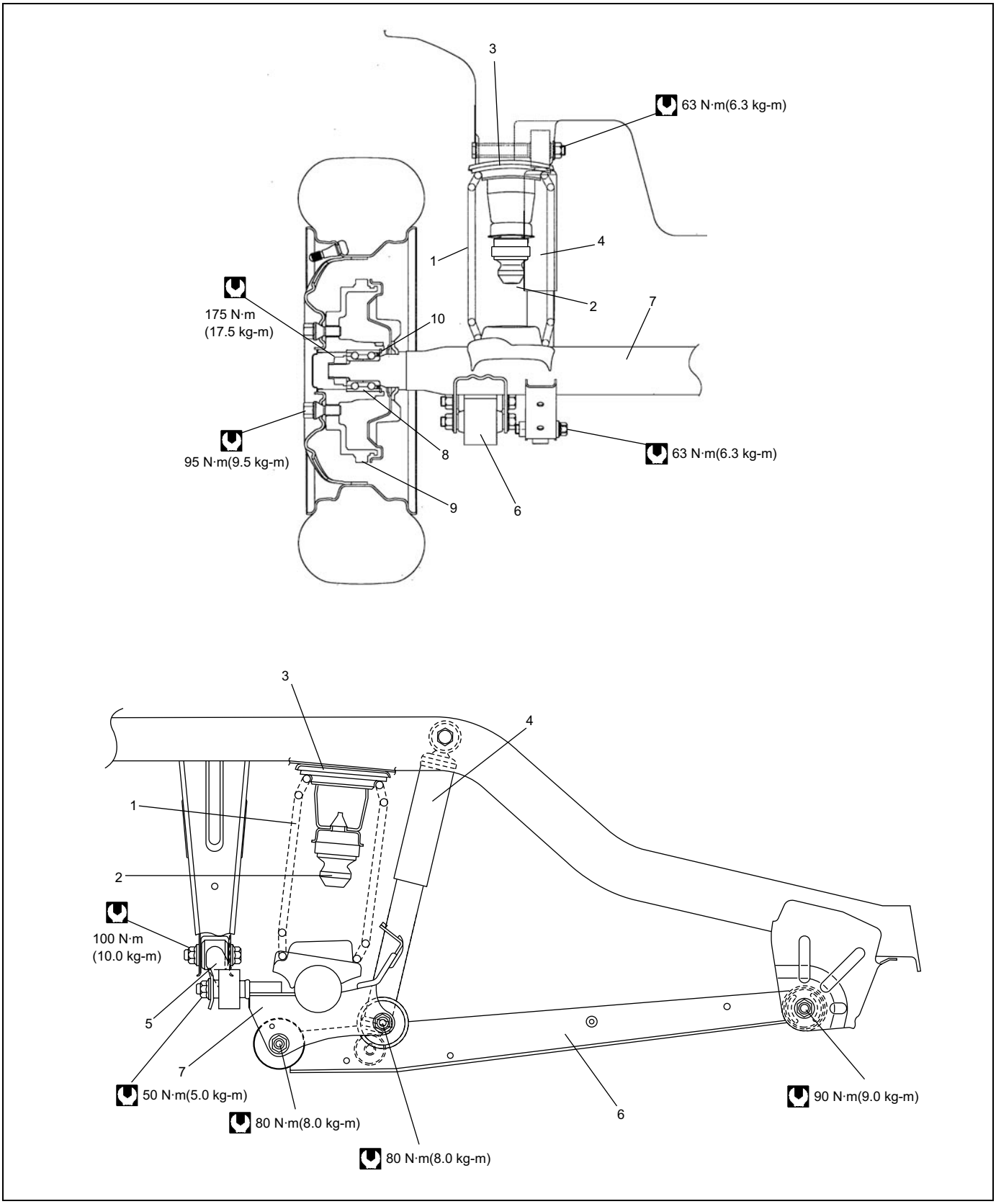

1. Rear coil spring	4. Rear shock absorber	7. Rear axle	10. Circlip
2. Rear bump stopper	5. Lateral rod	8. Wheel bearing	Tightening torque
3. Rear spring upper seat	6. Trailing arm	9. Brake drum	

4WD model

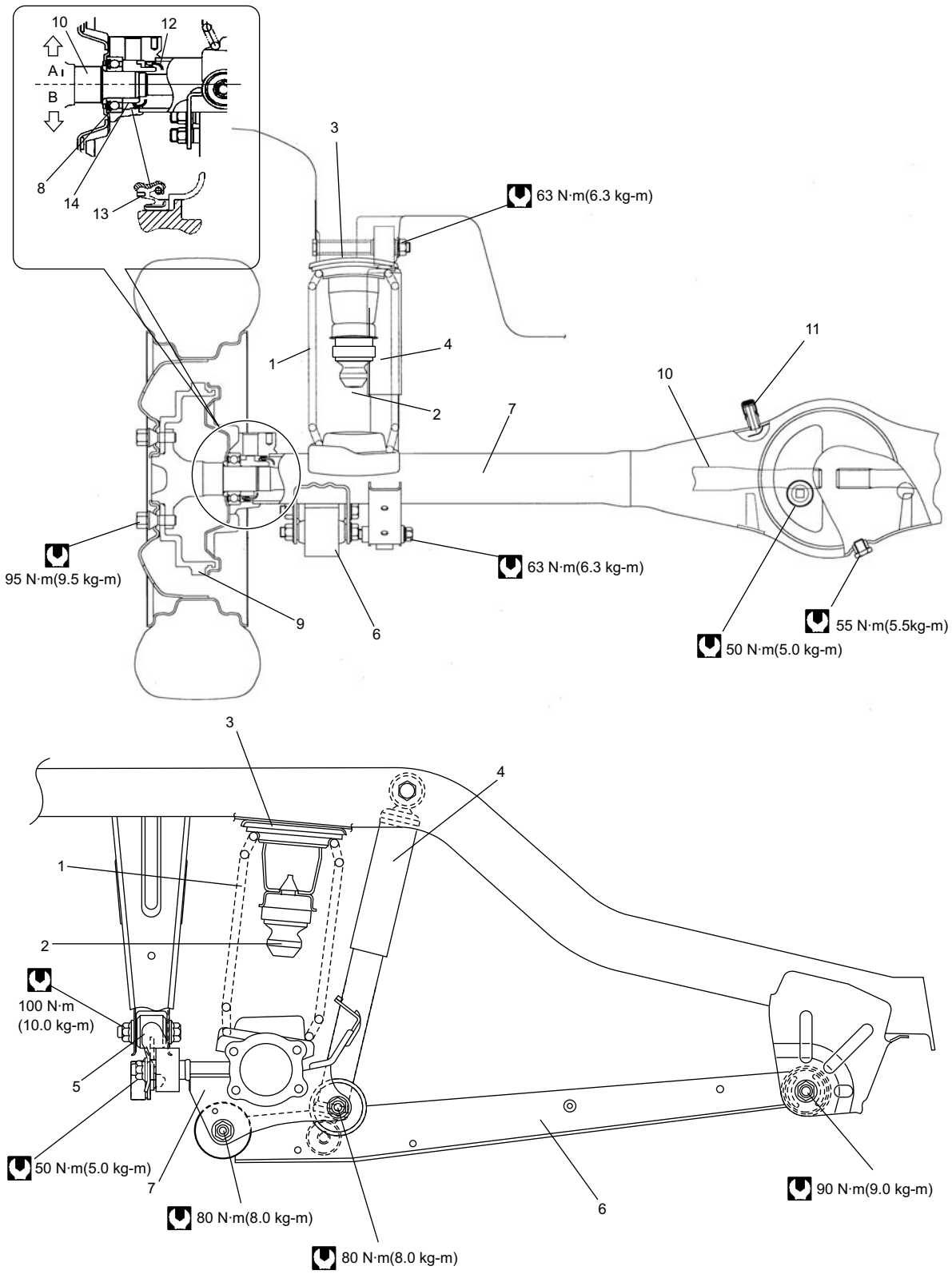

A: With ABS	4. Rear shock absorber	9. Brake drum	14. Wheel bearing retainer ring or rear wheel sensor ring (if equipped with ABS)
B: Without ABS	5. Lateral rod	10. Rear axle shaft	Tightening torque
1. Rear coil spring	6. Trailing arm	11. Breather cap	
2. Rear bump stopper	7. Rear axle housing	12. Oil seal protector	
3. Rear spring upper seat	8. Wheel bearing	13. Oil seal	

Diagnosis

Rear Shock Absorber Check

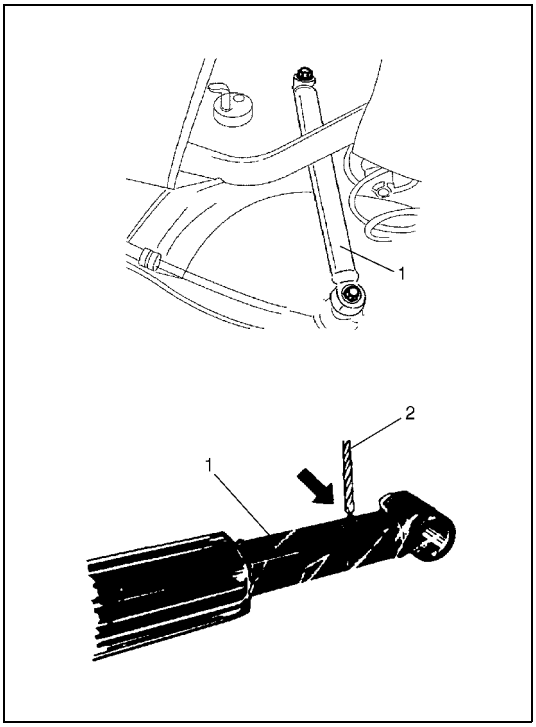

- Inspect for deformation or damage.
- Inspect bushings for wear or damage.
- Inspect for evidence of oil leakage.

Replace any defective part.

WARNING:

When handling rear shock absorber (1) in which high-pressure gas is sealed, make sure to observe the following precautions.

- **Don't disassemble it.**
- **Don't put it into the fire.**
- **Don't store it where it gets hot.**
- **Before disposing it, be sure to drill a hole (approximately 3 mm (0.12 in.) diameter) (2) in it where shown by an arrow in figure and let gas and oil out.**
  Lay it down sideways for this work. The gas itself is harmless but it may issue out of the hole together with chips generated by the drill. Therefore, be sure to wear goggle.

Trailing Arm, Lateral Rod, Rear Axle, Rear Axle (Housing) and Coil Spring Check

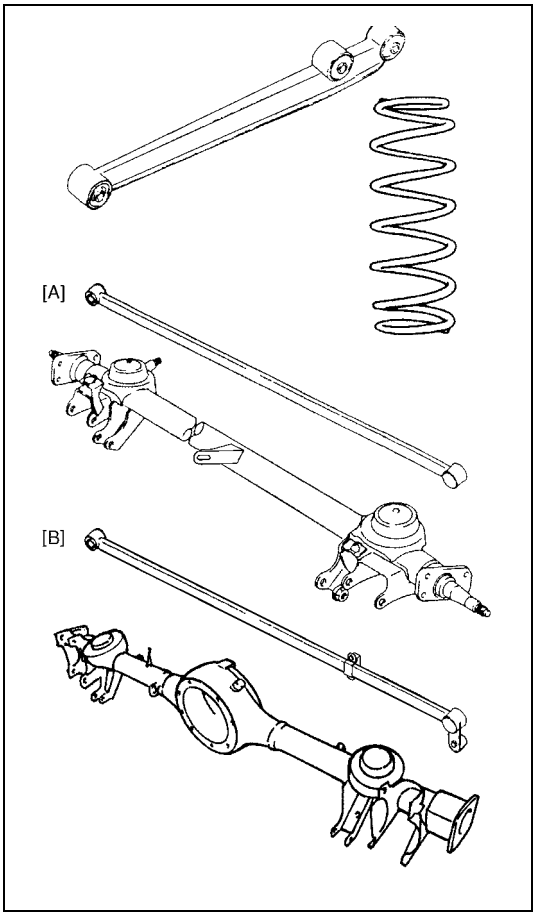

- Inspect for cracks, deformation or damage.
- Inspect bushing for damage, wear or breakage.

Replace any defective part.

[A]: 2WD model
[B]: 4WD model

Bump Stopper / spring Upper Seat Check

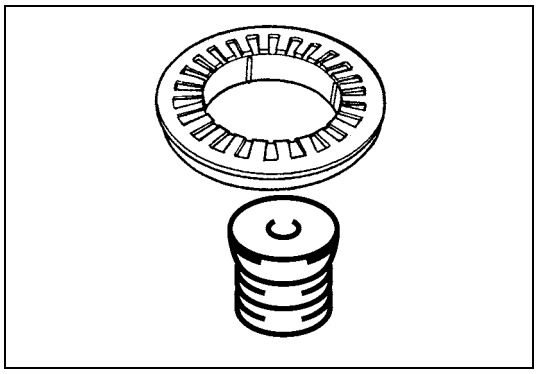

- Inspect for cracks, deformation or damage.

Replace any defective part.

Rear Suspension Fasteners

Check each bolt and nut fastening suspension parts for tightness.Tighten loose one, if any, to specified torque referring to the figure in “Rear Suspension Construction” in this section.

Wheel Disc, Bolt and Bearing Check

- Inspect each wheel disc for dents, distortion and cracks.
  A disc in badly damaged condition must be replaced.

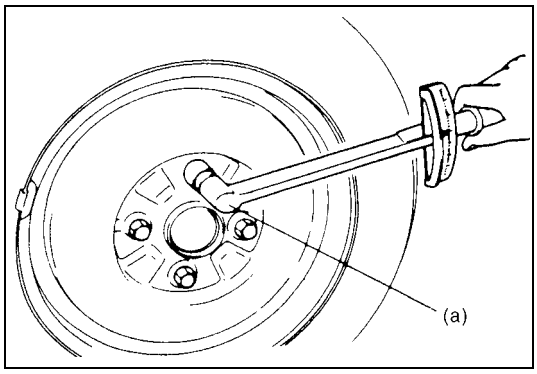

- Check wheel bolts for tightness and, as necessary, retighten to specification.

Tightening torque
Wheel bolt (a): 95 N·m (9.5 kg-m, 69.0 lb-ft)

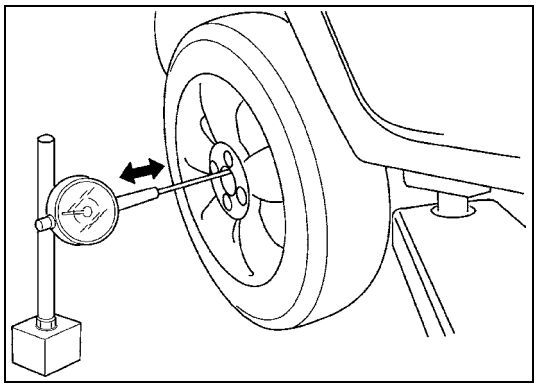

- Check wheel bearings for wear. When measuring thrust play, apply a dial gauge to axle shaft center.
  When measurement exceeds limit, replace bearing.

Thrust play limit
“a”: 0.1 mm (0.004 in.)

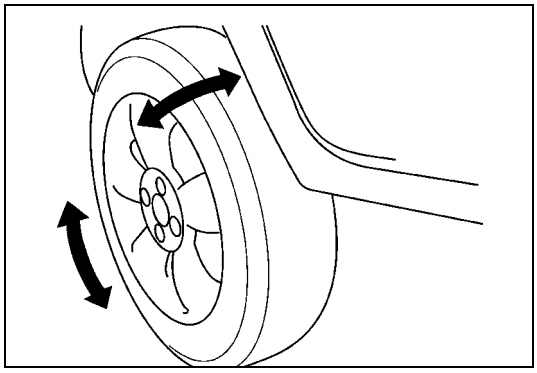

- By rotating wheel actually, check wheel bearing for noise and smooth rotation. If it is defective, replace bearing.

On-vehicle Service

Lateral Rod Removal and Installation

REMOVAL

1) Hoist vehicle.

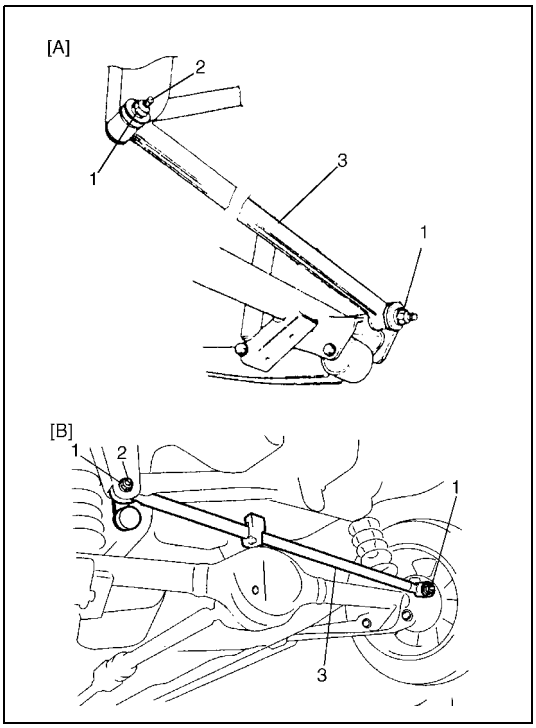

2) Remove lateral rod nuts (1) and bolt (2).
3) Remove lateral rod (3).

[A]: 2WD model
[B]: 4WD model

INSTALLATION

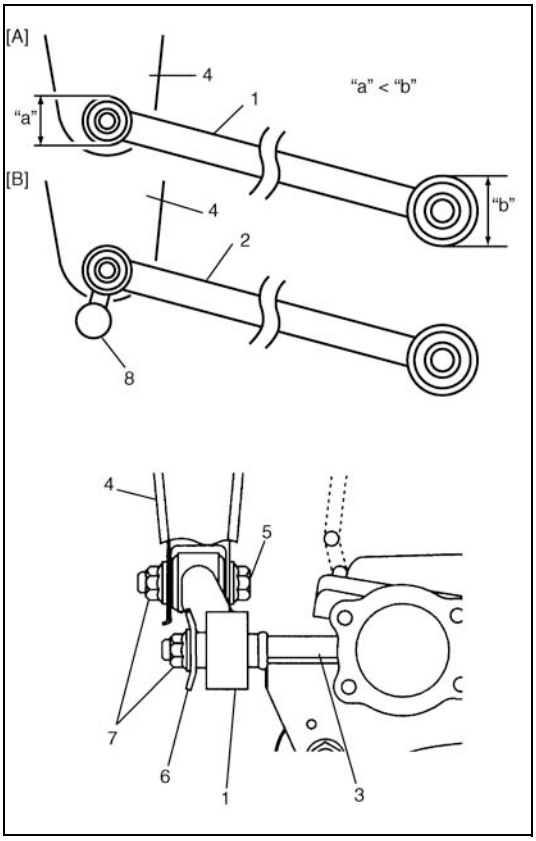

1) Install lateral rod (1) or (2) to rear axle (or axle housing) (3) and vehicle body (4) referring to figure for proper installing direction of bolt (5) and washer (6).
   Tighten nuts (7) temporarily at this step.

NOTE:

- **When installing Rod (1) for 2WD, identify rod end by smaller diameter "a" and install that end to vehicle body side.**
- **When installing rod (2) for 4WD, identify rod end by damper (8) and install that end to vehicle body side. Also make sure that both dampers are directed rearward of vehicle.**

[A]: 2WD model
[B]: 4WD model

2) Lower hoist.

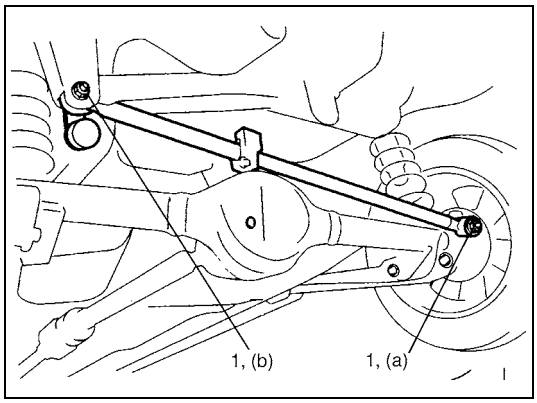

3) Tighten lateral rod nuts (1) to specified torque. It is the most desirable to have vehicle off hoist and in non-loaded condition when tightening them.

Tightening torque
Lateral rod axle side nut (a): 50 N·m (5.0 kg-m, 36.5 lb-ft)
Lateral rod body side nut (b): 100 N·m (10.0 kg-m, 72.5 lb-ft)

Rear Shock Absorber Removal and Installation

REMOVAL

1) Hoist vehicle.
2) Support rear axle (or axle housing) by using floor jack to prevent it from lowering.

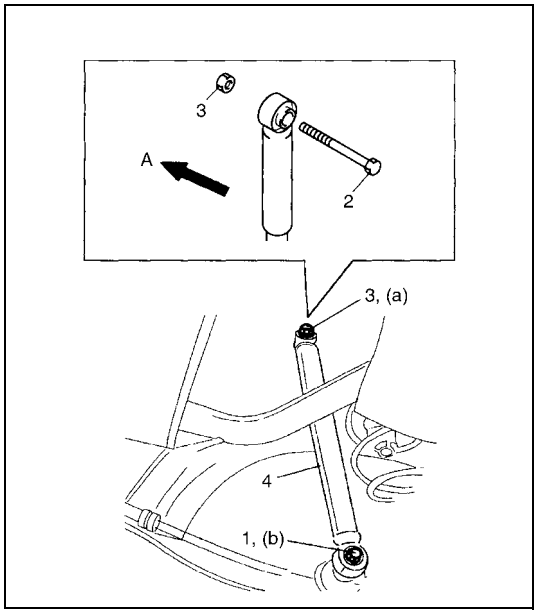

3) Remove lower bolt (1).
4) Remove upper bolt (2) and nut (3). Then remove shock absorber (4).

INSTALLATION

1) Install shock absorber (4) referring to figure.
   Tighten bolt and nut temporarily at this step.
2) Remove floor jack from rear axle (or axle housing) and lower hoist.
3) Tighten bolts and nut to specified torque.

Tightening torque
Rear shock absorber upper nut
(a): 63 N·m (6.3 kg-m, 45.5 lb-ft)
Rear shock absorber lower bolt
(b): 63 N·m (6.3 kg-m, 45.5 lb-ft)

A: Vehicle inside

Coil Spring Removal and Installation

REMOVAL

1) Hoist vehicle and remove rear wheel referring to “Wheel Removal and Installation” in Section 3F.

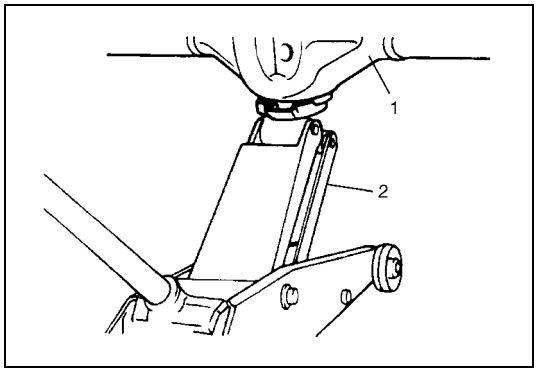

2) Support rear axle (or axle housing) (1) by using floor jack (2) to prevent it from lowering.

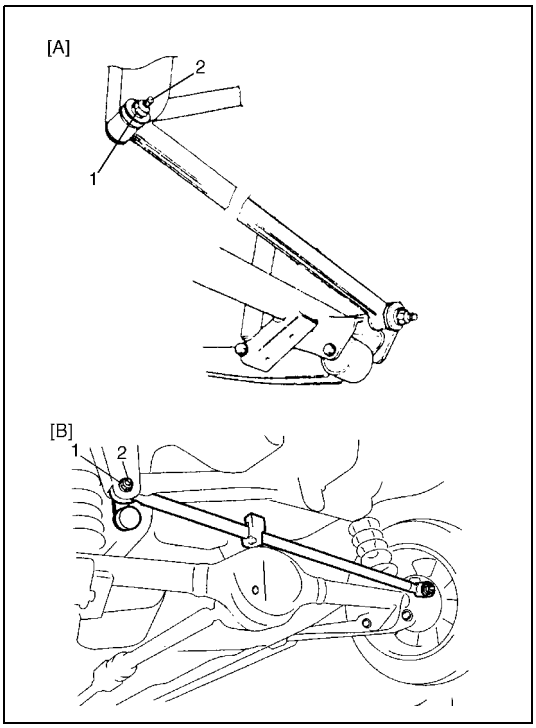

3) Remove lateral rod body side bolt (1) and nut (2).
4) Detach lateral rod from vehicle body.

[A]: 2WD model
[B]: 4WD model

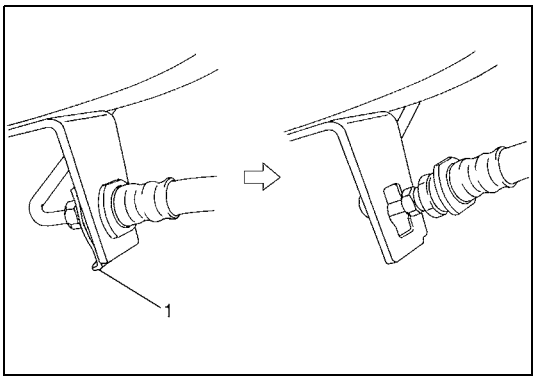

5) Remove brake flexible hose E-ring (1).
6) Remove LSPV adjust nut and detach spring end from rear axle (if equipped with LSPV).

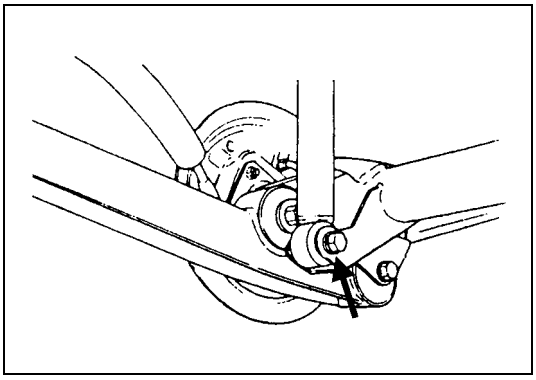

7) Detach shock absorber lower side from rear axle (or axle housing).

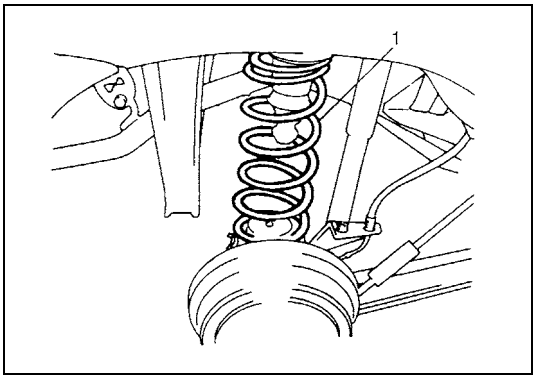

8) Lower rear axle (or axle housing) gradually as far down as where coil spring (1) can be removed.

CAUTION:
Be careful not to let rear axle (or axle housing) down too much.
It may cause damage to brake flexible hose and parking brake cable.

9) Remove coil spring.

INSTALLATION

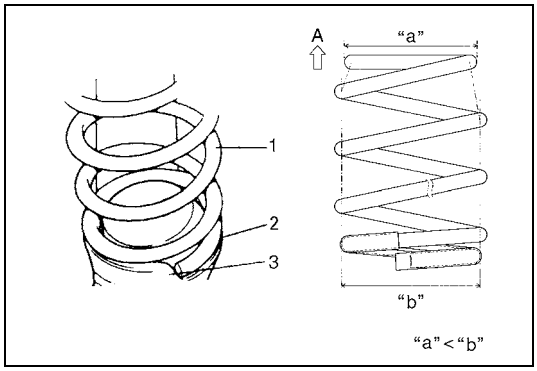

1) Install coil spring (1) on spring seat (2) of rear axle (or axle housing) and mate spring open end with stepped part (3) of spring lower seat and raise rear axle (or axle housing).

A :	Upper side
"a"	Small
"b"	Large

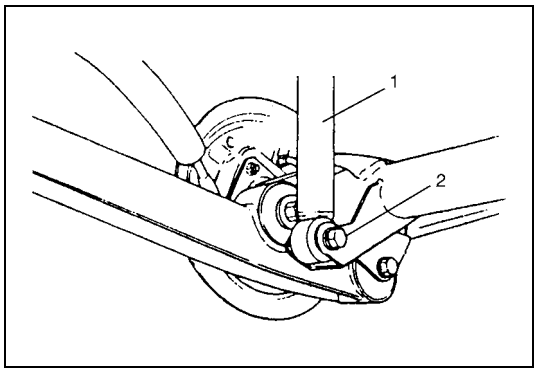

2) Install shock absorber (1) lower side to rear axle (or axle housing).
Tighten shock absorber lower bolt (2) temporarily by hand at this step.

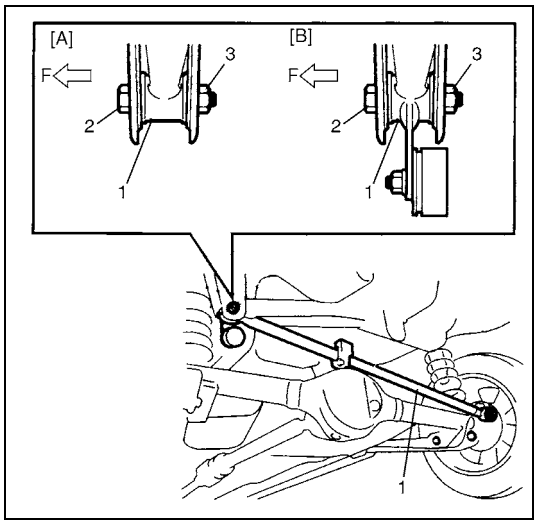

3) Install lateral rod (1) to vehicle body, refer to the figure for proper installing direction of bolt (2).
Tighten nut (3) temporarily by hand at this step.
4) Remove floor jack from rear axle (or axle housing).

[A]:	2WD model
[B]:	4WD model
F:	Forward

5) Install brake flexible hose E-ring.
6) Install LSPV spring to rear axle. Tighten LSPV adjust nut temporarily at this step (if equipped with LSPV).

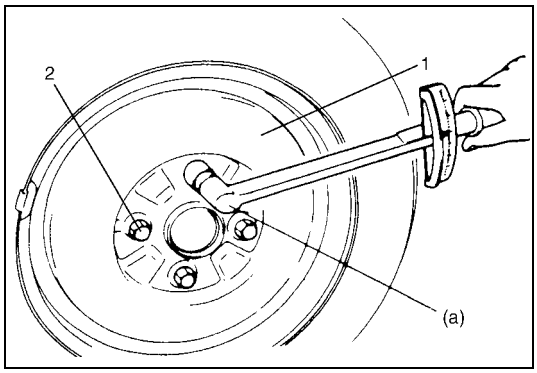

7) Install wheel (1) and tighten wheel bolts (2) to specified torque.

Tightening torque
Wheel bolt (a): 95 N·m (9.5 kg-m, 69.0 lb-ft)

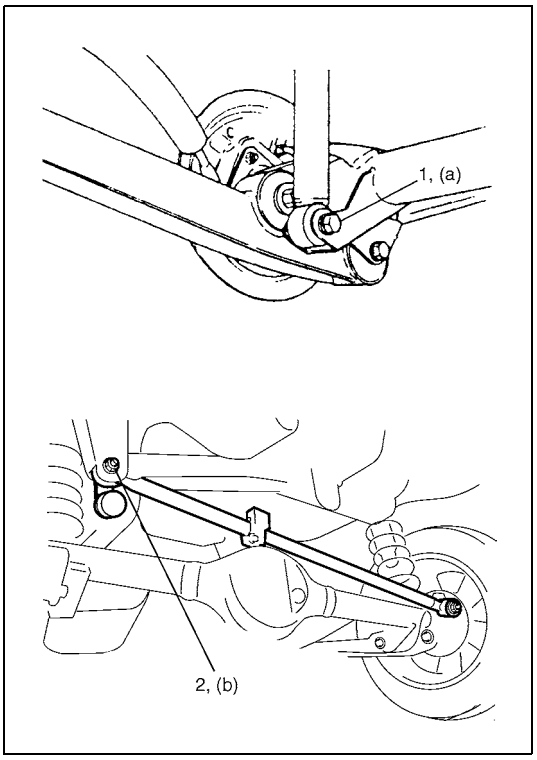

8) Lower hoist and vehicle in non-loaded condition, tighten absorber lower bolt (1) and lateral rod body side nut (2) to specified torque.

Tightening torque
Rear shock absorber lower bolt
(a): 63 N·m (6.3 kg-m, 45.5 lb-ft)
Lateral rod body side nut
(b): 100 N·m (10.0 kg-m, 72.5 lb-ft)

9) If equipped with LSPV, check and adjust LSPV spring referring to "LSPV (Load Sensing Proportioning Valve) Inspection and Adjustment" in Section 5A and "Brake Fluid Pressure Test (if equipped with LSPV)" in Section 5.

Bump Stopper Removal and Installation

REMOVAL

1) Hoist vehicle and remove rear wheel.

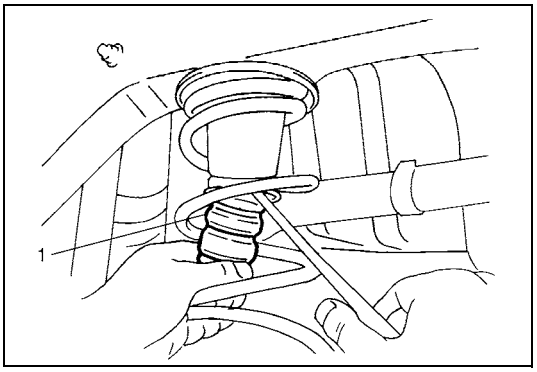

2) Remove bump stopper (1).

INSTALLATION

1) Install bumper stopper.

NOTE:
Before installing bushing, apply soap water on it.

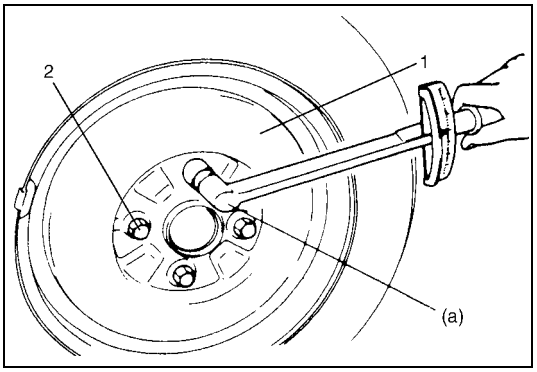

2) Install wheel (1) and tighten wheel bolts (2) to specified torque.

Tightening torque
Wheel bolt (a): 95 N·m (9.5 kg-m, 69.0 lb-ft)

Spring Upper Seat Removal and Installation

REMOVAL

1) Remove coil spring referring to “Coil Spring Removal and Installation” in this section.
2) Remove spring upper seat (1).

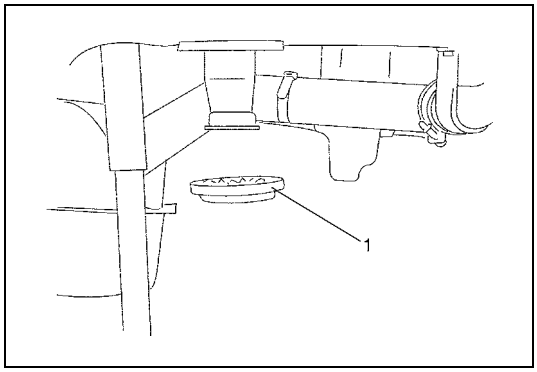

INSTALLATION

1) Install spring upper seat (1).

NOTE:

For proper installing direction of spring upper seat (1), refer to the figure.

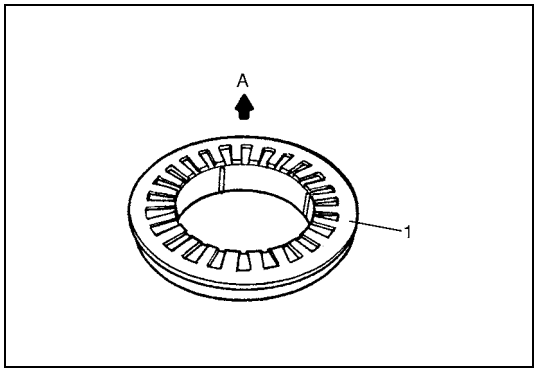

A : Vehicle body side (Upper side)

2) Install coil spring referring to “Coil Spring Removal and Installation” in this section.

Trailing Arm Removal and Installation

REMOVAL

1) Hoist vehicle and remove rear wheel referring to “Wheel Removal and Installation” in Section 3F.
2) Support rear axle (or axle housing) (1) by using floor jack (2).

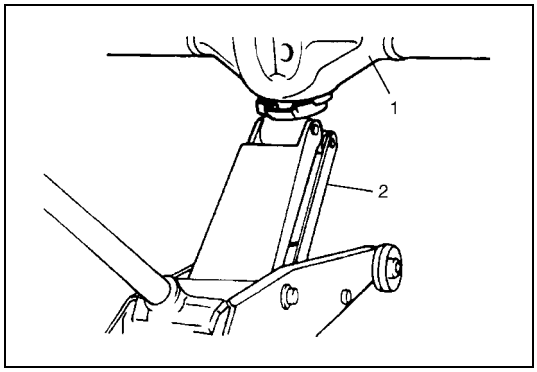

CAUTION:

Never apply floor jack against lateral rod as it may get deformed.

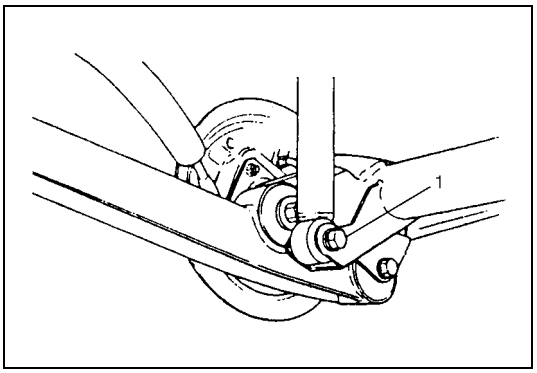

3) Remove shock absorber lower bolt (1) (right & left).

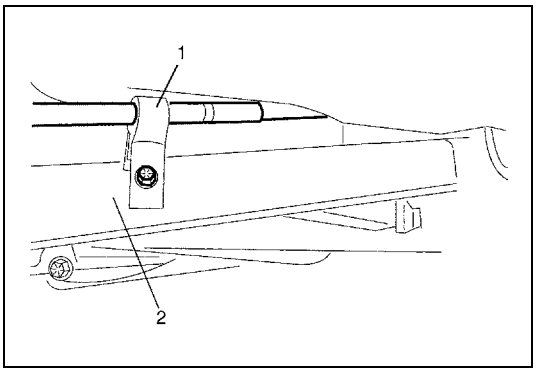

4) Remove parking brake cable clamp (1) from trailing arm (2).

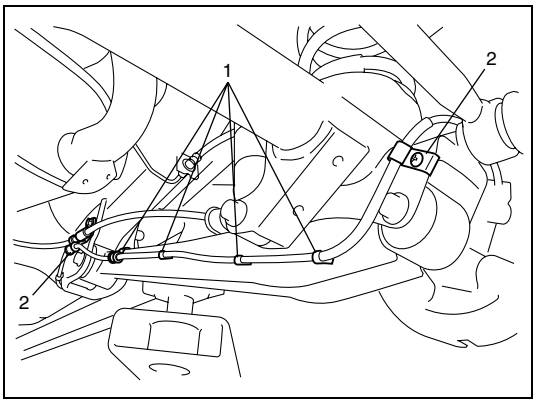

5) Release wheel speed sensor lead wire clamps (1) and (2) from trailing arm (if equipped with ABS).

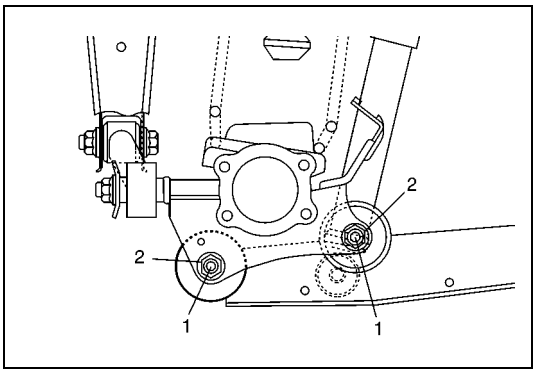

6) Remove trailing arm rear bolts (1) and nuts (2).

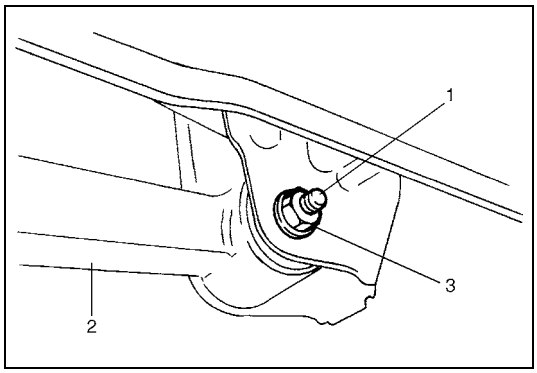

7) Remove trailing arm front bolt (1) and nuts (3) and then remove trailing arm (2).

INSTALLATION

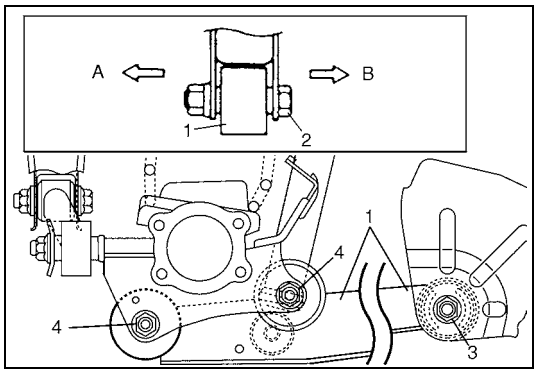

1) Install trailing arm (1) to vehicle body and rear axle (or axle housing) referring to figure for proper installing direction of bolts (2).
   Tighten front nut (3) and rear nuts (4) temporarily by hand at this step.

A :	Vehicle out side
B :	Vehicle center side

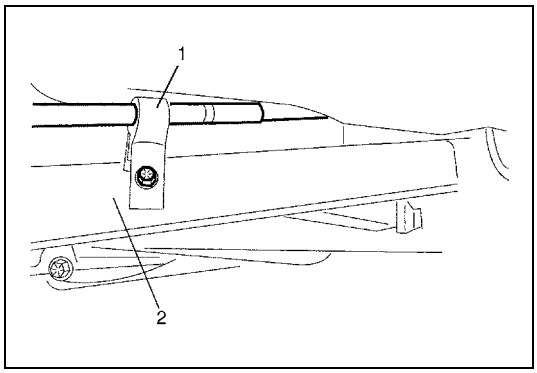

2) Install parking brake cable clamp (1) to trailing arm (2).

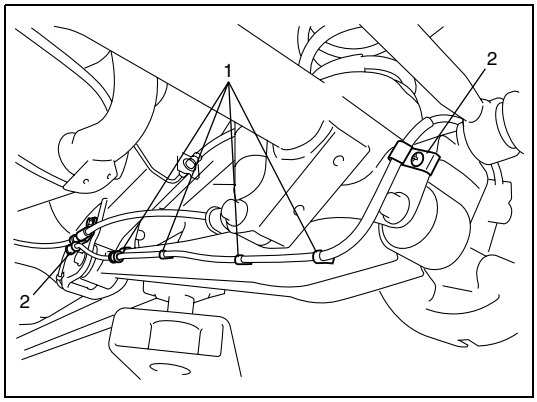

3) Clamp wheel speed sensor lead wire clamps (1) and (2) securely (if equipped with ABS).

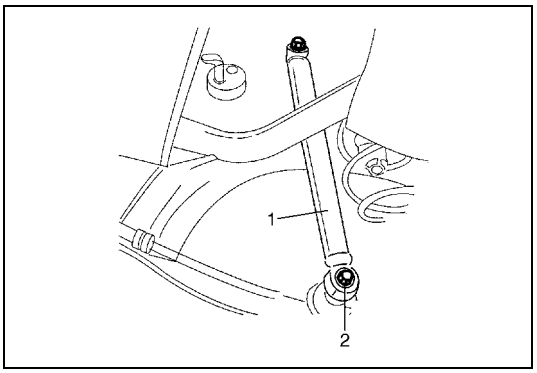

4) Install shock absorber (1) lower side to rear axle (or axle housing).
   Tighten shock absorber lower bolt (2) temporarily by hand at this step.

5) Remove floor jack from rear axle (or axle housing).
6) Install wheel and tighten wheel bolts to specified torque.

Tightening torque
Wheel bolt: 95 N·m (9.5 kg-m, 69.0 lb-ft)

7) Lower hoist.

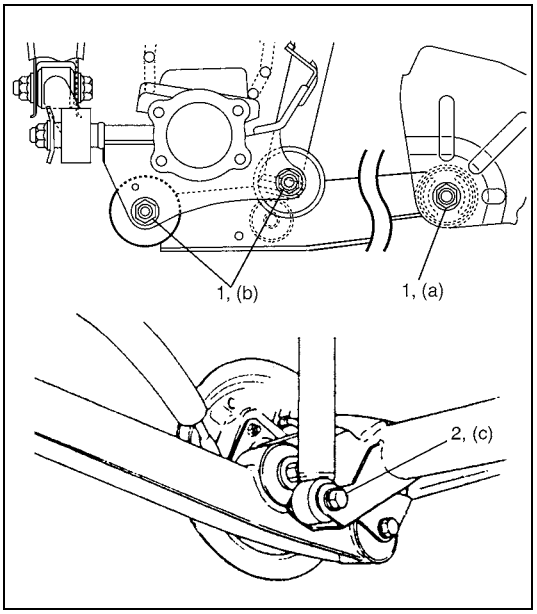

8) Tighten front and rear trailing arm nuts (1), shock absorber lower bolts (2) and lateral rod right side nut (3) to specified torque.

NOTE:
When tightening these nuts, be sure that vehicle is off hoist and in no-loaded condition.

Tightening torque
Front trailing arm nut (a): 90 N·m (9.0 kg-m, 65.0 lb-ft)
Rear trailing arm nut (b): 80 N·m (8.0 kg-m, 58.0 lb-ft)
Rear shock absorber lower bolt
(c): 63 N·m (6.3 kg-m, 45.5 lb-ft)

Rear Axle Removal and Installation (for 2WD Model)

REMOVAL

1) Hoist vehicle and remove rear wheels (right & left) referring to “Wheel Removal and Installation” in Section 3F.

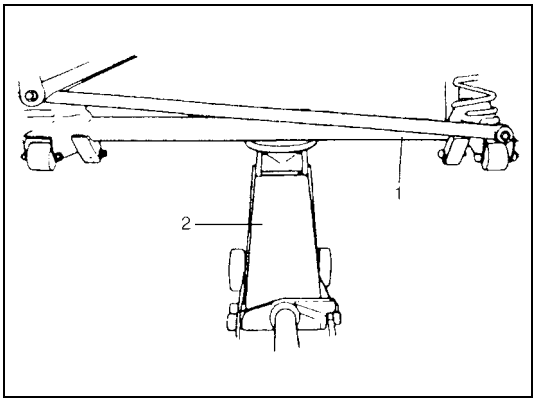

2) Support rear axle (1) by using floor jack (2).
3) Remove rear brake drums (right & left). For details, refer to steps 2) to 6) of “Brake Drum Removal and Installation (for 2WD Model)” in Section 5C.

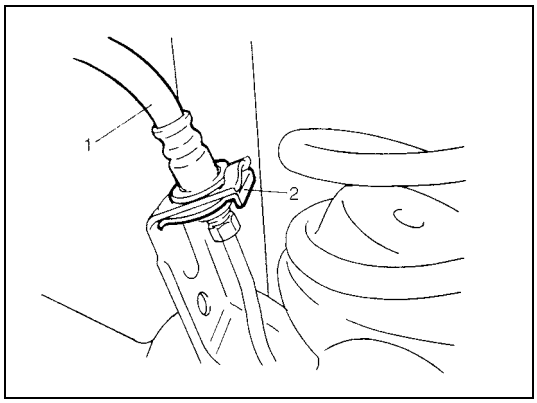

4) Remove E-rings (2) (right & left) securing brake hose (1).

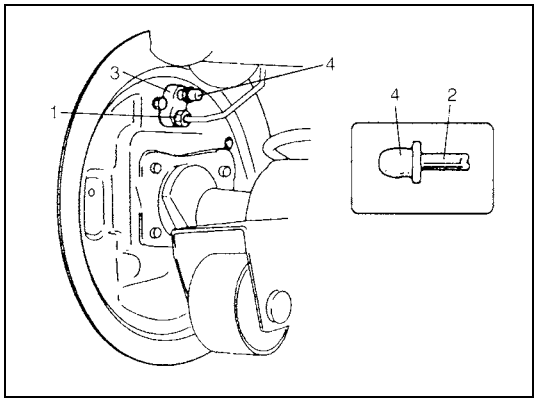

5) Disconnect brake pipe flare nuts (1) from wheel cylinders (3) (right & left) and put bleeder plug cap (4) onto pipe (2) to prevent fluid from spilling.

CAUTION:
Do not allow brake fluid to get on painted surfaces.

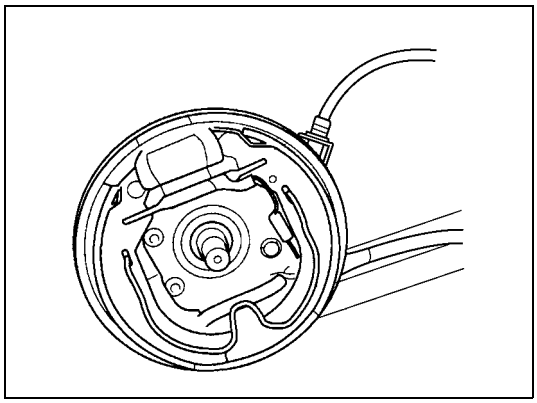

6) Remove brake back plates (1) (right & left) from rear axle and hang removed brake back plate with a wire hook.

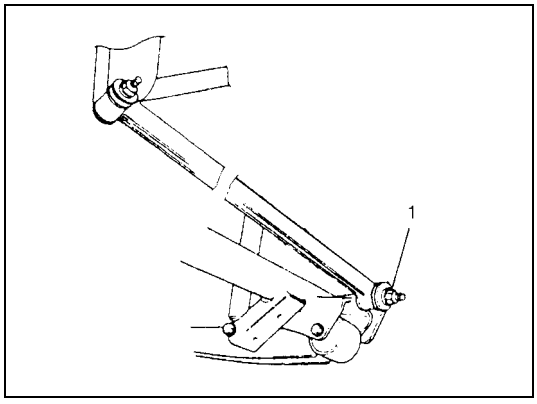

7) Remove lateral rod axle side nut (1).

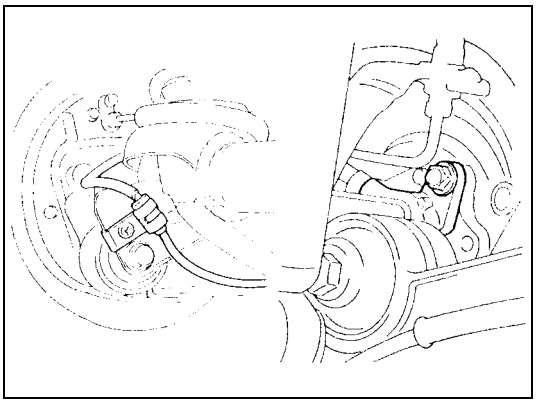

8) Disconnect wheel speed sensor and lead wire clamps (right & left) (if equipped).

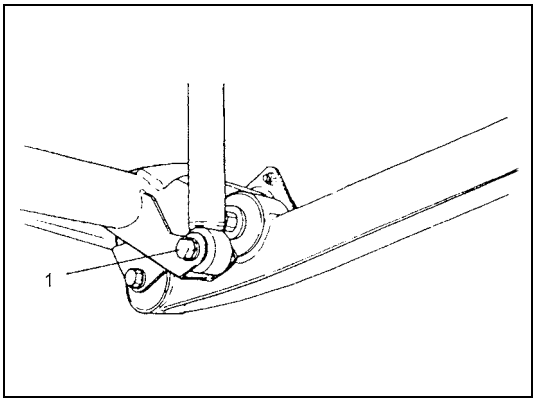

9) Remove shock absorber lower bolts (1) (right & left).

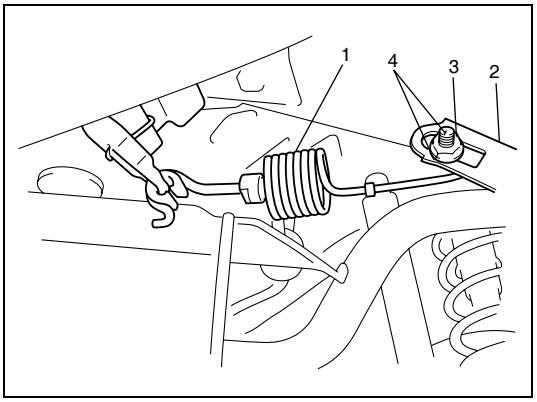

10) Remove LSPV spring end nut (3) and spring (1) from rear axle bracket (2) (if equipped).

NOTE:

When removing LSPV spring end nut (3) from bracket (2), put match marks (4) on bolt and bracket (2) to facilitate reassembly.

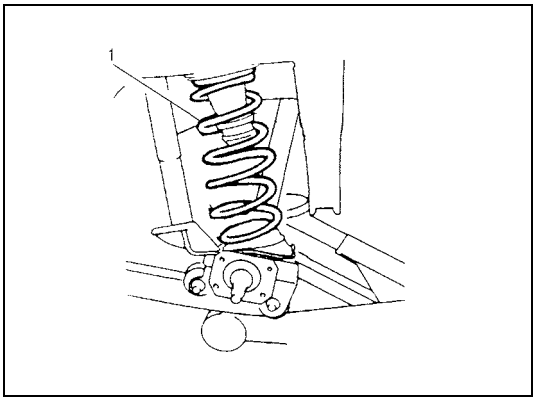

11) Lower rear axle gradually as far down as where coil springs (1) (right & left) can be removed.

CAUTION:

Be careful not to let rear axle down too much.
It may cause damage to brake flexible hose and parking brake cable.

12) Remove coil springs (right & left).

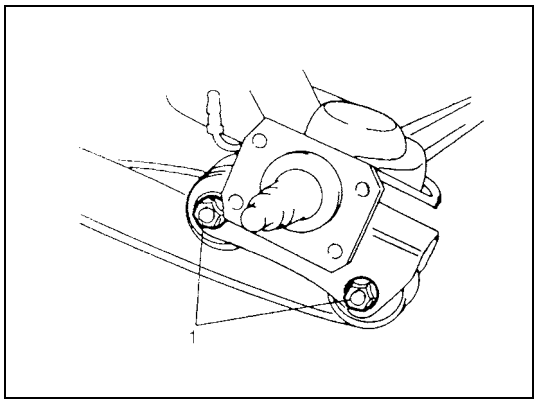

13) Loosen trailing arm rear side nuts (1) but don't remove bolts (right & left).

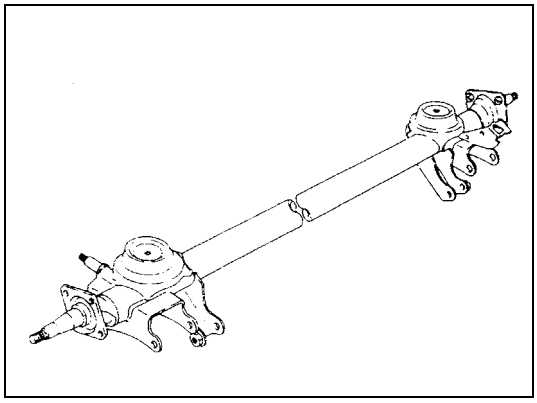

14) While supporting rear axle at both ends (right & left), remove trailing arm rear side bolts and then remove rear axle from chassis by lowering floor jack gradually.

INSTALLATION

Install removed parts in reverse order of removal, noting the following points.

1) Place rear axle on floor jack. Then install lateral rod to rear axle and tighten nut temporarily by hand.

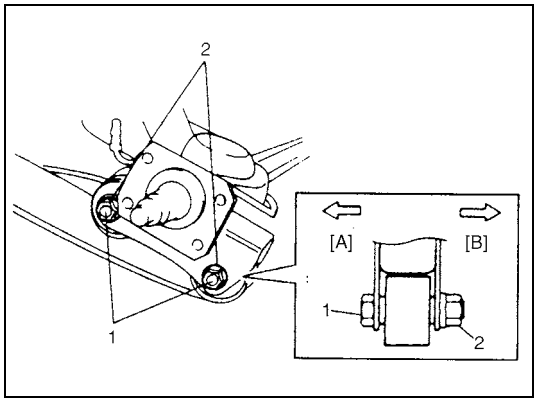

2) Install trailing arm rear bolts (1) (right & left) in proper direction as shown in figure. Then tighten nuts (2) temporarily by hand.

[A]:	Vehicle center side
[B]:	Vehicle outside

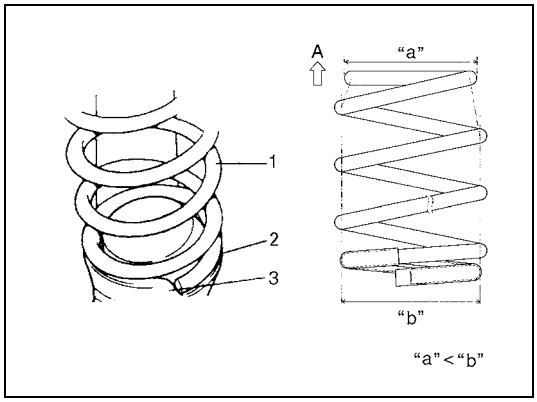

3) Install coil springs (1) (right & left) on spring seat (2) of rear axle as shown in figure and then raise rear axle.

NOTE:

When seating coil spring (1), mate spring end with stepped part (3) of rear axle spring seat as shown.

A:	Upper side
"a":	Small
"b":	Large

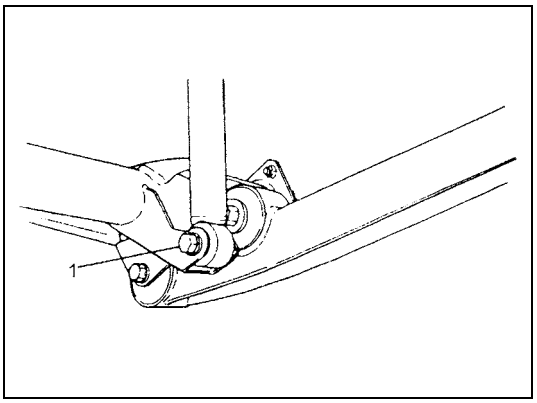

4) Tighten shock absorber lower bolts (1) (right & left) temporarily by hand.
5) Remove floor jack from rear axle.

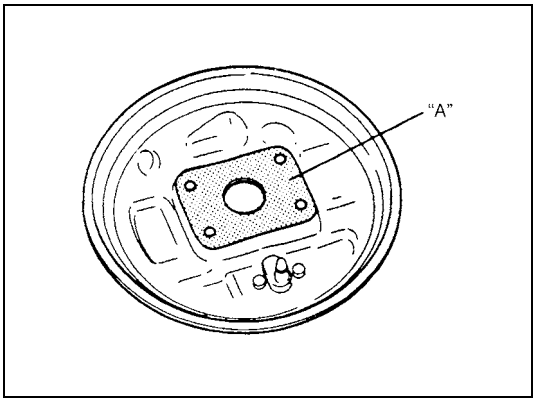

6) Clean mating surface of rear axle (right & left) with brake back plate and apply water tight sealant as shown in figure.
"A": Sealant 99000-31090

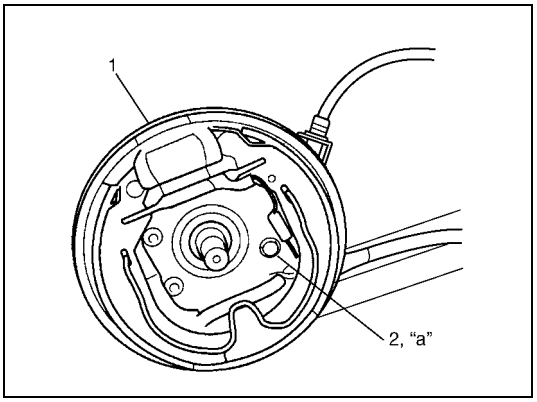

7) Install brake back plates (1) and tighten back plate bolts (2) to specified torque.
Tightening torque
Brake back plate bolt (a): 23 N·m (2.3 kg-m, 17.0 lb-ft)

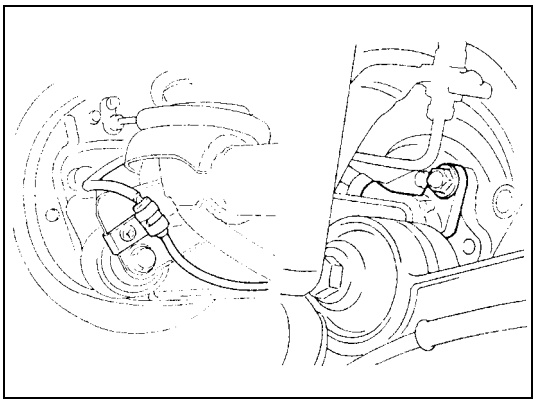

8) Connect wheel speed sensor and lead wire clamps (right & left) (if equipped with ABS).

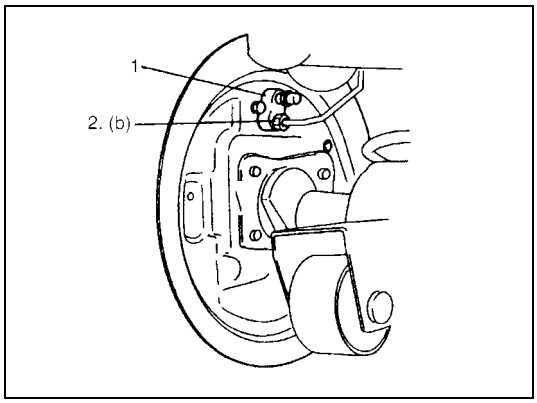

9) Connect brake pipes to wheel cylinders (1) (right & left) and tighten brake pipe flare nuts (2) to specified torque.
Tightening torque
Brake pipe flare nut (b): 16 N·m (1.6 kg-m, 11.5 lb-ft)

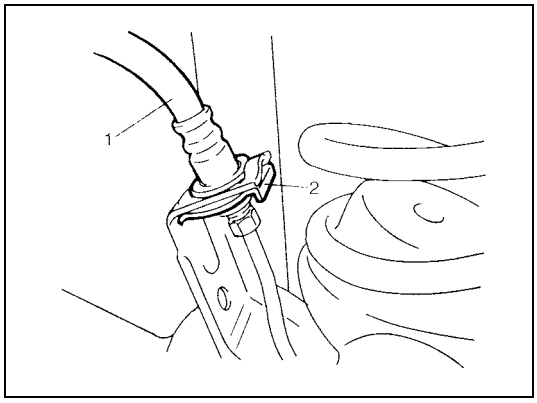

10) Connect brake flexible hoses (1) (right & left) to bracket on rear axle and secure it with E-rings (2) (right & left).

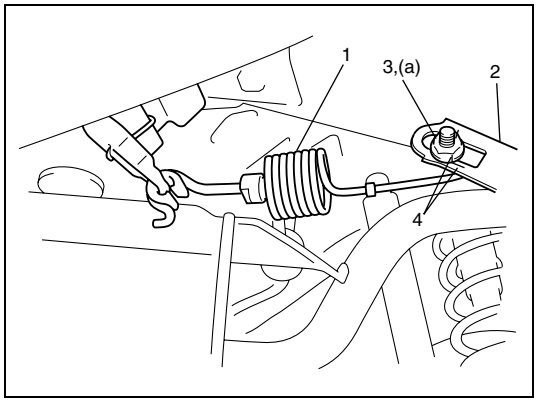

11) Install LSPV spring end nut (3) and spring (1) to rear axle bracket (2) (if equipped).

NOTE:

When installing LSPV spring end nut (3) to bracket (2), make sure to align match marks (4) made during removal.

Tightening torque
LSPV spring end nut (a): 20 N·m (2.0 kg-m, 14.5 lb-ft)

12) Install brake drums (right & left). For details, refer to “Brake Drum Removal and Installation (for 2WD Model)” in Section 5C.
13) Fill reservoir with brake fluid and bleed brake system. (For Bleeding Operation, see SECTION 5.)

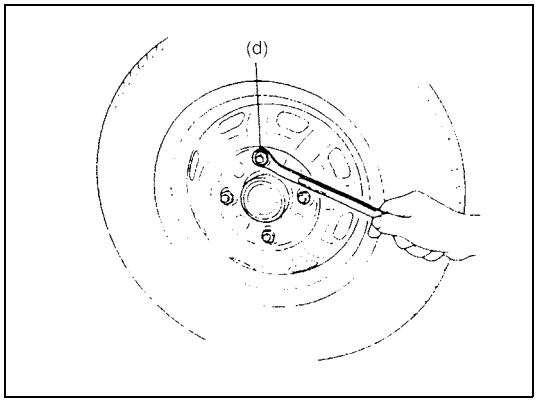

14) Install wheel and tighten wheel bolts to specified torque.
Tightening torque
Wheel bolt (d): 95 N·m (9.5 kg-m, 69.0 lb-ft)

15) Upon completion of all jobs, depress brake pedal with about 300 N (30 kg, 66 lbs) load three to five times so as to obtain proper drum-to-shoe clearance.
Adjust parking brake cable. (for ADJUSTMENT, see SECTION 5.)
16) Lower hoist and bounce vehicle up and down several times to stabilize suspension.

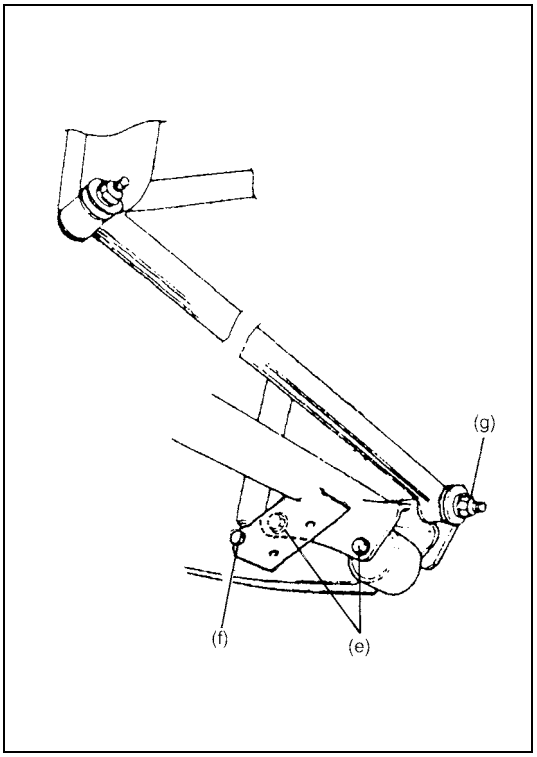

17) Tighten right and left trailing arm rear nuts, shock absorber lower bolts and lateral rod rear axle side nut to specified torque.

NOTE:

When tightening these nuts and bolts, be sure that vehicle is off hoist and in non loaded condition.

Tightening torque
Rear trailing arm nut
(e): 80 N·m (8.0 kg-m, 58.0 lb-ft)
Rear shock absorber lower bolt
(f): 63 N·m (6.3 kg-m, 45.5 lb-ft)
Lateral rod axle housing side nut
(g): 50 N·m (5.0 kg-m, 36.5 lb-ft)

18) Check to ensure that brake drum is free from dragging and proper braking is obtained.
19) Perform brake test (foot brake and parking brake).
20) If equipped with LSPV, check and adjust LSPV spring referring to “LSPV (Load Sensing Proportioning Valve) Inspection and Adjustment” in Section 5A and perform “Brake Fluid Pressure Test (if equipped with LSPV)” in Section 5.
21) Check each installed part for oil leakage.

Wheel Bearing Removal and Installation (for 2WD Model)

REMOVAL

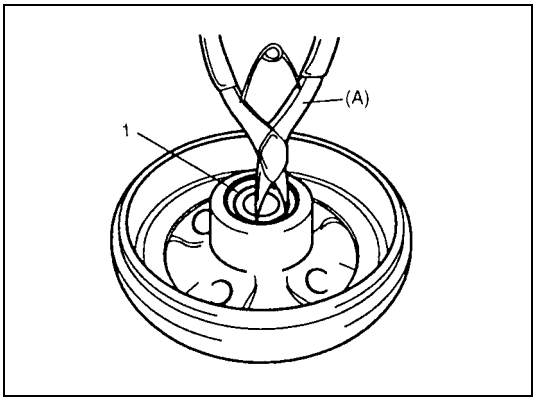

1) Remove rear brake drum referring to “Brake Drum Removal and Installation (for 2WD Model)” in Section 5C.
2) Remove circlip (1).
Special tool
(A): 09900-06108

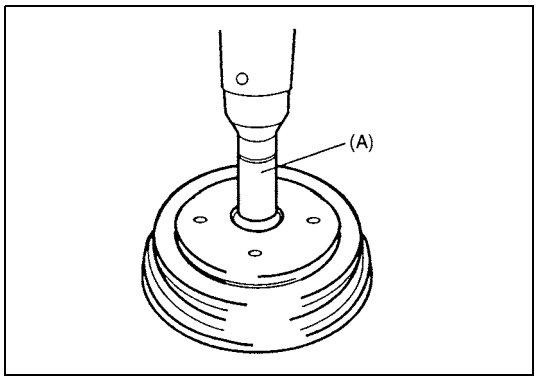

3) Remove wheel bearing by using special tool and hydraulic press.
Special tool
(A): 09913-76010

CAUTION:
Never reuse wheel bearing.
Reused bearing should have excessive play.

INSTALLATION

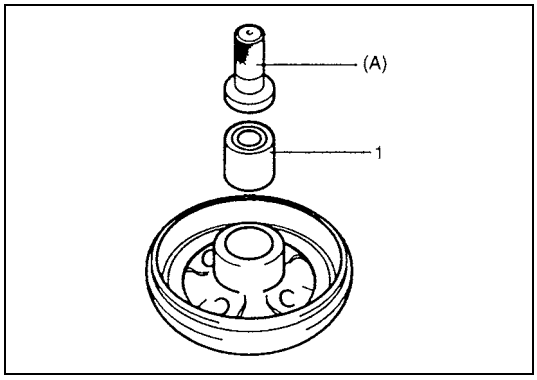

1) Install new wheel bearing (1) by using special tool and hydraulic press.

NOTE:
Seal side of bearing comes brake back plate side.

Special tool
(A): 09913-75810

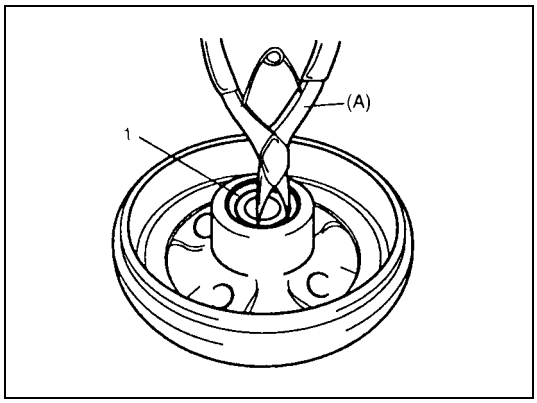

2) Install circlip (1).
Special tool
(A): 09900-06108

3) Install brake drum and wheel, referring to “Brake Drum Removal and Installation (for 2WD Model)” in Section 5C.

Rear Axle Shaft and Wheel Bearing Removal and Installation (for 4WD Model)

REMOVAL

1) Hoist vehicle and remove rear wheel and brake drum screw.

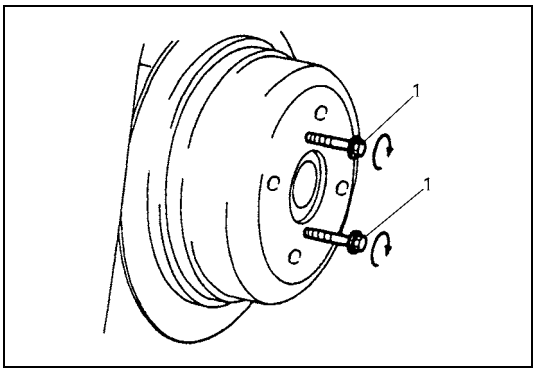

2) Remove rear brake drum by using two 8 mm bolts (1). For details referring " Brake Drum Removal and Installation (for 4WD Model)" to Section 5C.

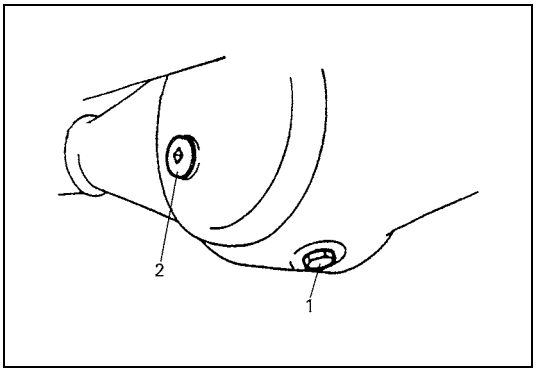

3) Drain gear oil from rear axle housing by loosening drain plug (1).

2. Filler and level plug

4) Remove brake shoe referring to "Brake Shoe Removal and Installation" in Section 5C.
5) Remove parking brake cable from brake back plate.

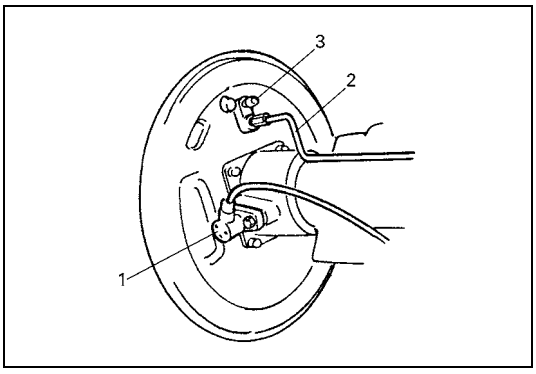

6) Disconnect brake pipe (2) from wheel cylinder and put wheel cylinder bleeder plug (3) cap onto pipe to prevent fluid from spilling.
7) Remove wheel speed sensor (1) from axle housing (if equipped with ABS).
8) Remove brake back plate bolts from axle housing.

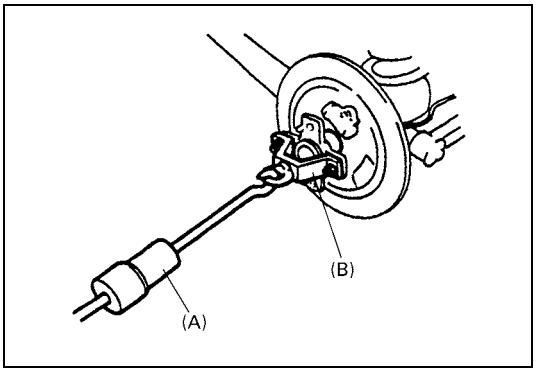

9) Using special tools indicated, draw out axle shaft with brake back plate.

Special tool
(A): 09942-15511
(B): 09943-17912

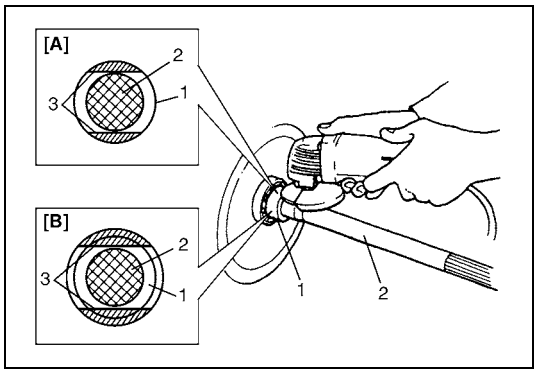

10) In order to remove the retainer ring (1) from the axle shaft (2), grind (3) with a grinder two parts of the bearing retainer ring as illustrated till it becomes thin.

CAUTION:
Be careful not to go so far as to grind the shaft.

[A]: Without ABS
[B]: With ABS

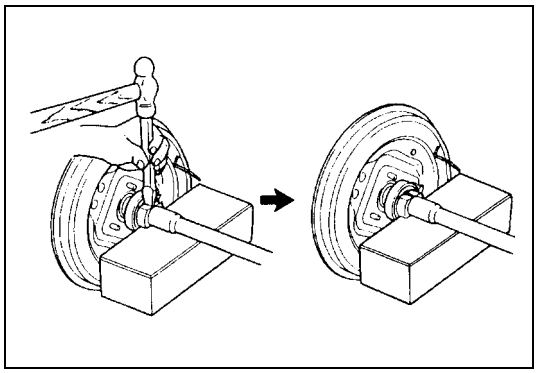

11) Break with a chisel the thin ground retainer ring, and it can be removed.

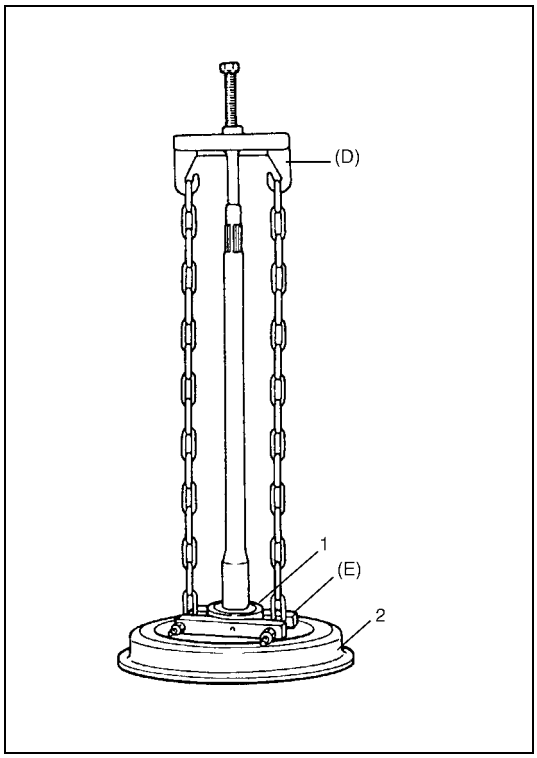

12) Using special tools, remove bearing (1) from shaft and then remove brake back plate (2).

Special tool
(D): 09927-18411
(E): 09921-57810

INSTALLATION

Install removed parts in reverse order of removal, noting the following points.

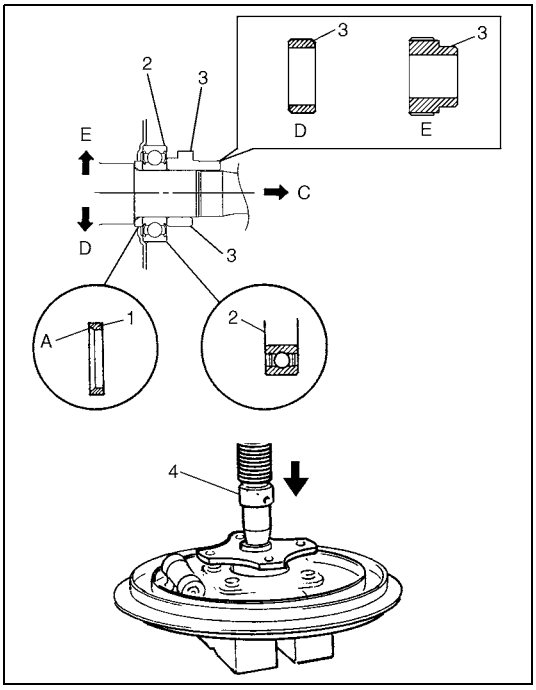

1) Install wheel bearing spacer (1) with the tapered side of its inner diameter directed toward outside, or brake drum side.
2) Press in a new bearing (2) and retainer ring (3) in order by using an hydraulic press (4).

NOTE:

Use care not to cause any damage to outside of retainer ring.

A :	Tapered side
B :	Blank
C :	Differential side
D :	Without ABS
E :	With ABS

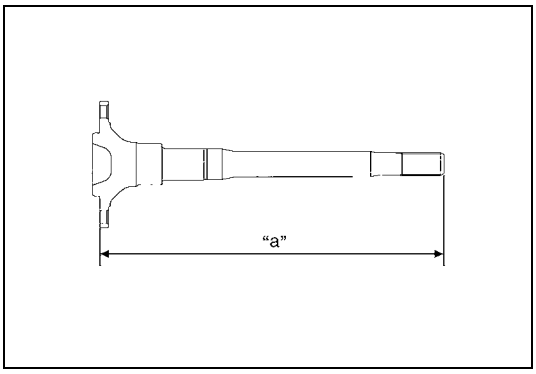

3) Inspect axle shaft length.

Rear axle shaft length "a"
Left side: 792.0 mm (31.2 in.)
Right side: 673.0 mm (26.5 in.)

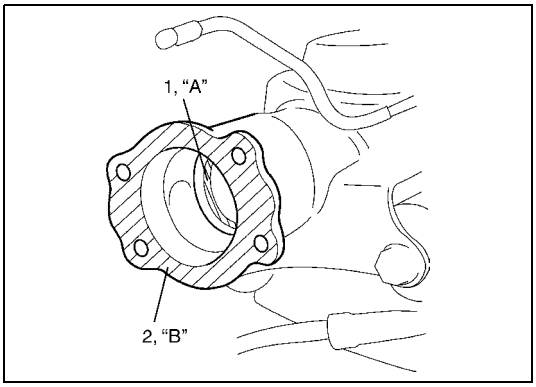

4) Apply grease to axle shaft oil seal (1) lip as shown.

"A": Grease 99000-25010

5) Apply sealant to mating surface of rear axle housing (2) with brake back plate.

NOTE:

Make sure to remove old sealant before applying it anew.

"B": Sealant 99000-31090

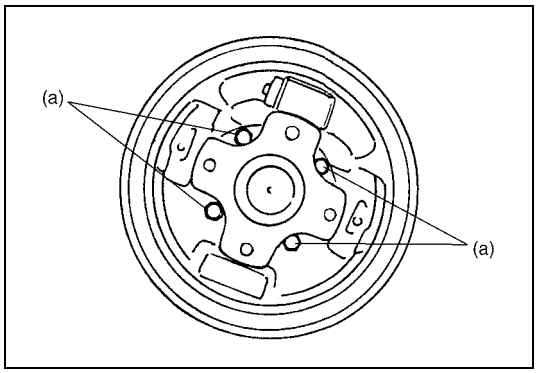

6) Install rear axle shaft to rear axle housing.
7) Tighten brake back plate bolts to specified torque.

NOTE:

When installing rear axle shaft, be careful not to cause damage to oil seal lip in axle housing.

Tightening torque
Brake back plate bolt (a): 23 N·m (2.3 kg-m, 17.0 lb-ft)

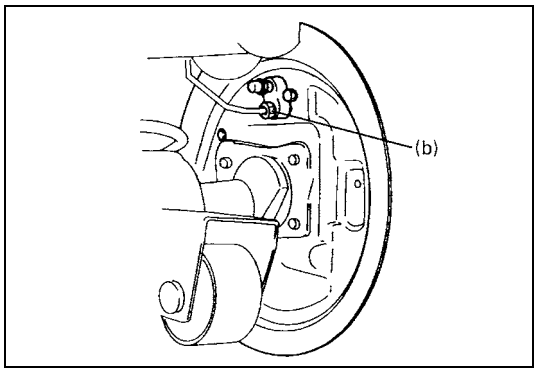

8) Connect brake pipe to wheel cylinder and tighten brake pipe flare nut to specified torque.

Tightening torque
Brake pipe flare nut (b): 16 N·m (1.6 kg-m, 11.5 lb-ft)

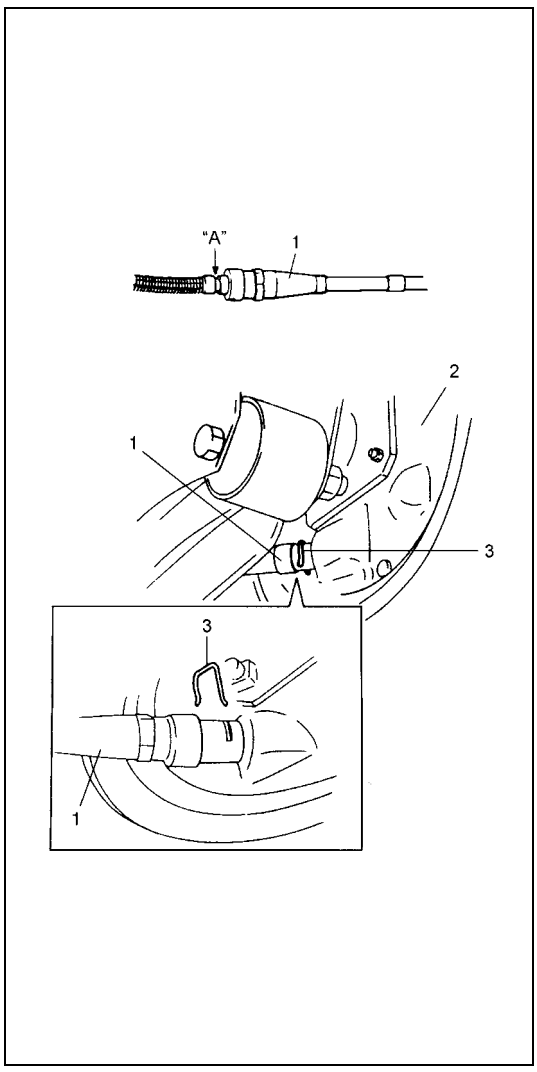

9) Apply watertight sealant where plate and cable contact, and run parking brake cable (1) through brake back plate (2) and secure it with clip (3).

"A": Sealant 99000-31090

CAUTION:
Check to ensure that clip is in good condition before installing it. If deformed or broken, replace.

10) Install wheel speed sensor (if equipped with ABS).
11) Install brake shoe referring to "Brake Shoe Removal and Installation" in Section 5C.
12) Install brake drum. For details, refer to "Brake Drum Removal and Installation (for 2WD Model)" of Section 5C.
13) Tighten oil drain plug to specified torque and refill rear axle (differential) housing with new specified gear oil. Then tighten filler plug to specified torque. Refer to "Rear Differential Gear Oil Change" in Section 7F for refill.
14) Install wheel and tighten wheel bolts to specified torque.
15) Fill reservoir with brake fluid and breed brake system. (For bleeding operation, refer to "Air Bleeding of Brake System" in Section 5.)
16) Upon completion of all jobs, pull parking brake lever with about 200 N (20 kg, 44 lbs) load three to five times so as to obtain proper drum-to-shoe clearance.
    Adjust parking brake cable (for adjustment, refer to "Parking Brake Inspection and Adjustment" in Section 5).
17) Check to ensure that brake drum is free from dragging and proper braking is obtained.

18) Perform brake test (foot brake and parking brake).
(For brake test, refer to “Road Testing Brakes” in Section 5.)
19) Check each installed part for oil leakage.

Rear Axle Shaft Oil Seal Removal and Installation (for 4WD Model)

REMOVAL

1) Remove rear axle shaft. For details, refer to steps 1) to 9) of “Rear Axle Shaft and Wheel Bearing Removal and Installation (for 4WD Model)” in this section.

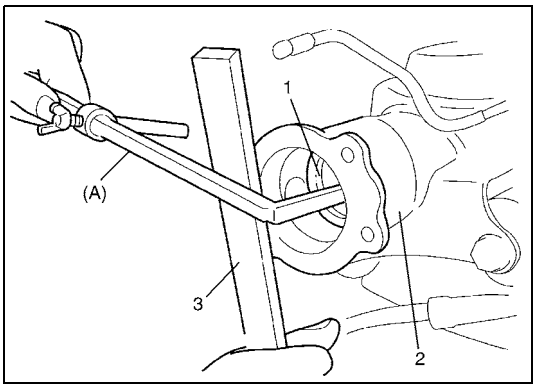

2) Remove axle shaft oil seal (1) from axle housing (2).

Special tool
(A): 09913-50121

3. Wooden block

INSTALLATION

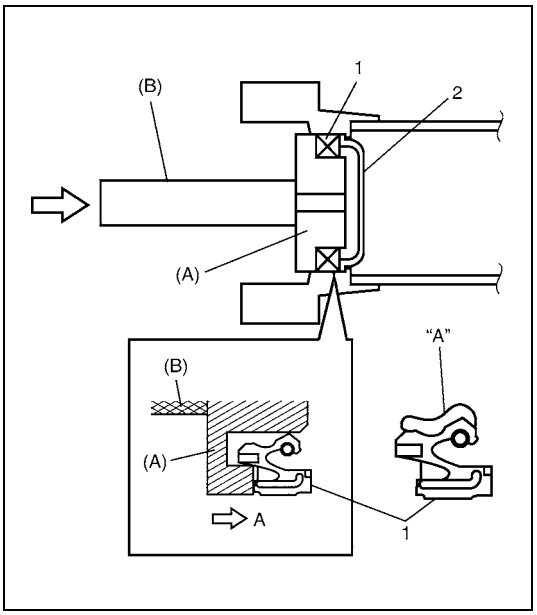

1) Using special tools, drive in oil seal (1) until it contacts oil seal protector (2) in axle housing.

NOTE:

- **Make sure that oil seal is free from inclination as it is installed.**
- **Refer to the figure so that oil seal is installed in proper direction.**

Special tool
(A): 09944-67010
(B): 09924-74510
“A”: Grease 99000-25010

A: Differential side

2) For procedure hereafter, refer to Steps 3) to 18) of “Rear Axle Shaft and Wheel Bearing Removal and Installation (for 4WD Model)” in this section.

Rear Axle Housing Removal and Installation (for 4WD Model)

REMOVAL

1) Hoist vehicle and remove rear wheels referring to “Wheel Removal and Installation” in Section 3F.
2) Remove rear axle shafts (right & left) referring to Steps 2) – 9) of “Rear Axle Shaft and Wheel Bearing Removal and Installation (for 4WD Model))” in this section.

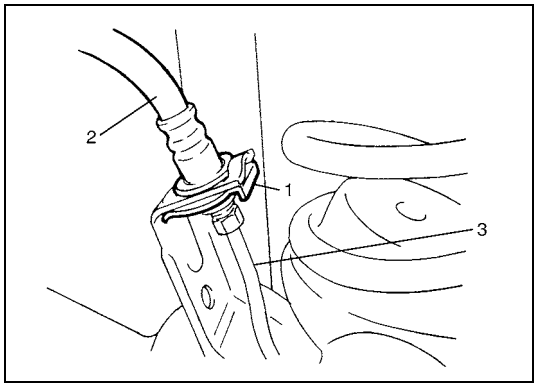

3) Disconnect brake pipes (3) (right & left) from flexible hoses (2) and remove E-rings (1).
4) Release wheel speed sensor clamps from axle housing (if equipped with ABS).

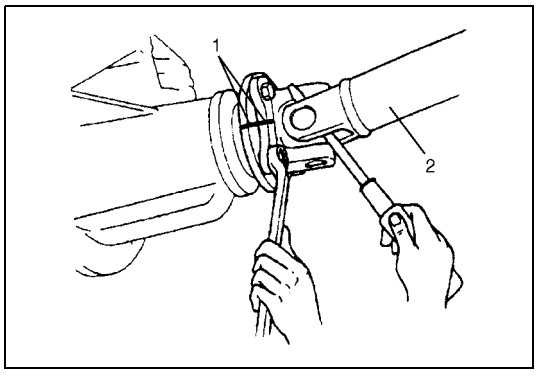

5) Before removing propeller shaft, give match marks (1) on joint flange and propeller shaft (2) as shown.
6) Remove propeller shaft.

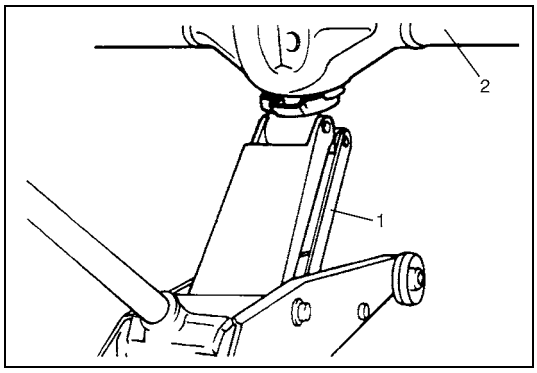

7) For jobs hereafter, support rear axle housing by using floor jack (1) under axle housing (2).
8) Remove differential carrier assembly.

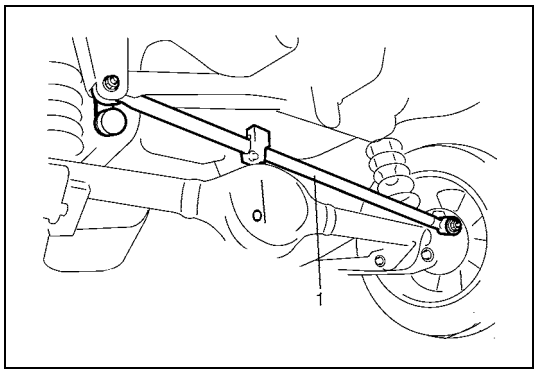

9) Remove lateral rod (1).

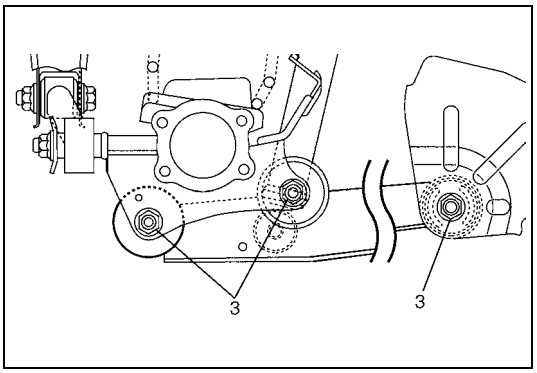

10) Loosen front and rear mounting nuts (3) of trailing arm but don't remove bolts.

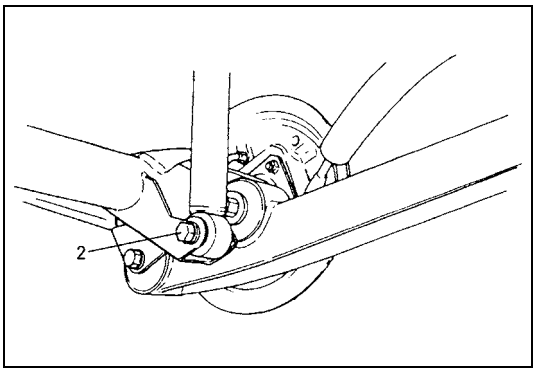

11) Remove shock absorber lower mounting bolts (2) (right & left).
12) Lower floor jack until tension of suspension coil spring becomes a little loose and remove rear mount bolts of trailing arms (right & left).
13) Lower rear axle housing gradually and remove coil springs (right & left).

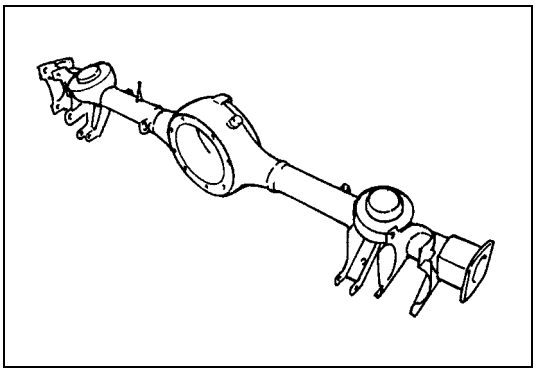

14) Remove axle housing.

INSTALLATION

Install removed parts in reverse order of removal, noting the following.

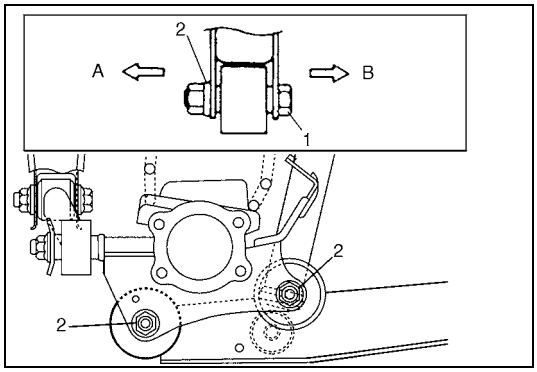

1) Place rear axle housing on floor jack. Then install rear trailing arm bolts (1) (right & left) in proper direction as shown. Then tighten nuts (2) temporarily by hand.

A : Vehicle out side
B : Vehicle center side

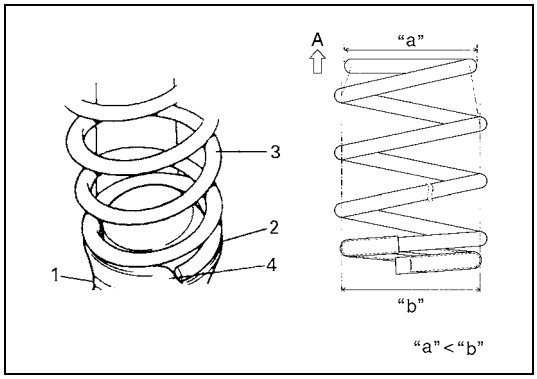

2) Install coil springs (3) (right & left) on spring seat (2) of axle housing (1) and raise axle housing.

NOTE:

Upper and lower diameters of coil spring are different. Bring lager diameter end at bottom and set its open end in place on spring seat.

4. Stepped part
A : Upper side

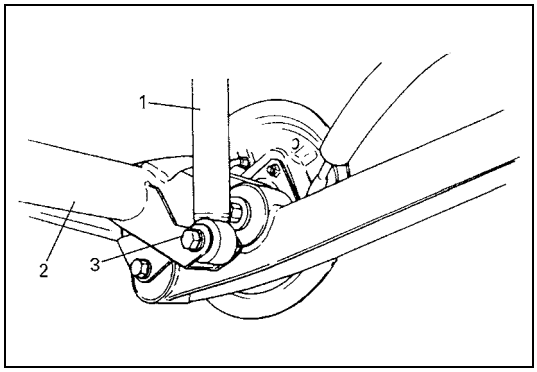

3) Install shock absorber (1) (right & left) to rear axle housing (2) and install bolts in proper direction as shown. Then tighten absorber lower bolts (3) (right & left) temporarily by hand at this step.

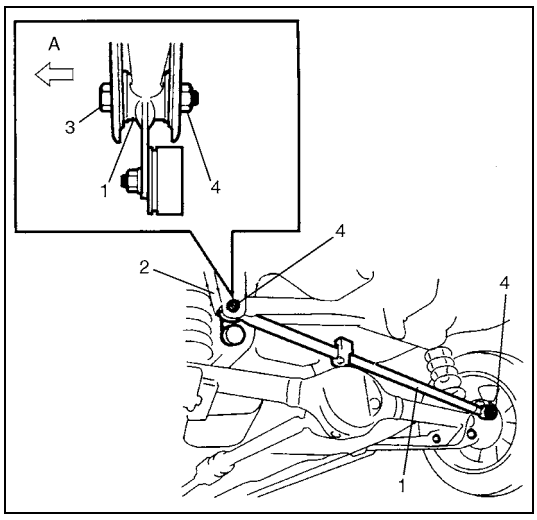

4) Install lateral rod (1) and install bolt (3) in proper direction as shown. Then tighten nuts (4) temporarily by hand.

2. Vehicle body
A : Forward

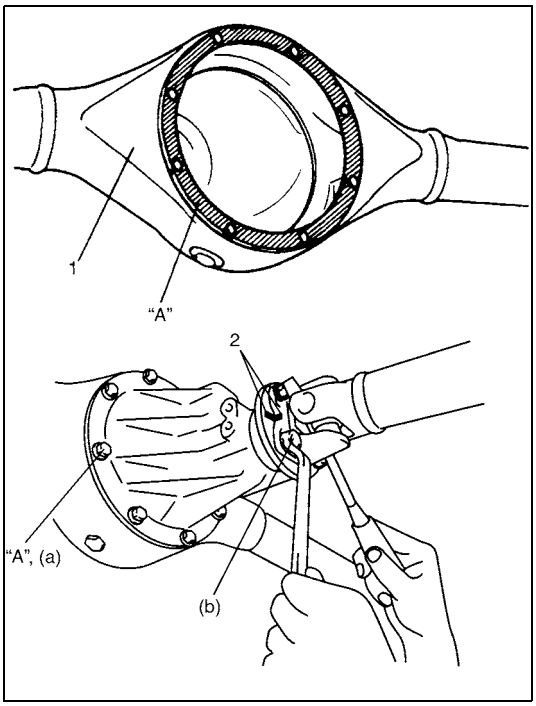

5) Clean mating surfaces of axle housing (1) and differential carrier and apply sealant to housing side.

"A": Sealant 99000-31110

6) Apply sealant to thread part of carrier bolts and tighten carrier bolts to specified torque.

"A": Sealant 99000-31110

Tightening torque
Rear differential carrier bolt
(a): 23 N·m (2.3 kg-m, 17.0 lb-ft)

7) Install propeller shaft to joint flange aligning match marks (2) and tighten flange bolts to specified torque.

Tightening torque
Companion flange bolt (b): 23 N·m (2.3 kg-m, 17.0 lb-ft)

8) Remove floor jack from axle housing.

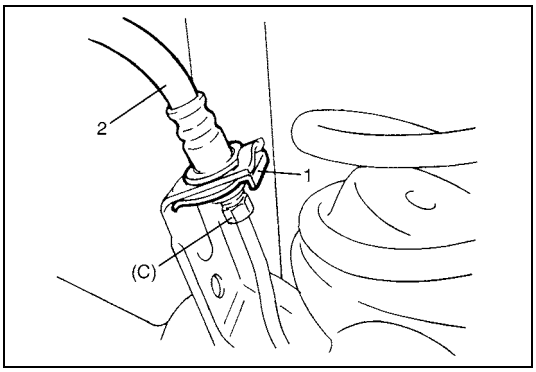

9) Connect brake flexible hoses (2) (right & left) to bracket on axle housing and secure it with E-rings (1).

Tightening torque
Brake pipe flare nut (C): 16 N·m (1.6 kg-m, 11.5 lb-ft)

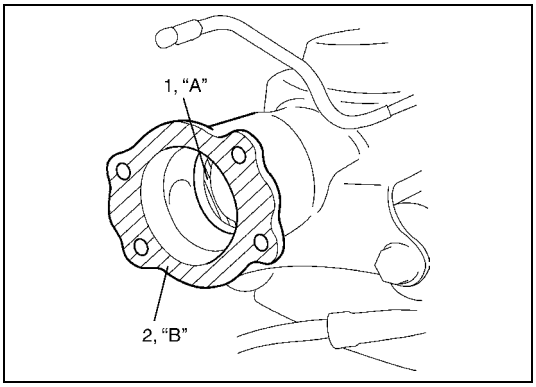

10) Apply grease to rear axle shaft oil seals (1) lip (right & left) as shown.

"A": Grease 99000-25010

11) Clean mating surface (2) (right & left) of rear axle housing and brake back plate and apply sealant as shown in figure.

"B": Sealant 99000-31090

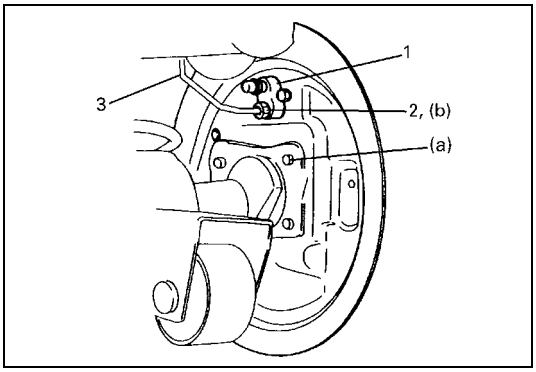

12) Install rear axle shaft (right & left) to rear axle housing.
13) Tighten brake back plate bolts to specified torque.

Tightening torque
Brake back plate bolt (a): 23 N·m (2.3 kg-m, 17.0 lb-ft)

14) Connect brake pipes (3) to wheel cylinders (1) (right & left) and tighten brake pipe flare nuts (2) to specified torque.

Tightening torque
Brake pipe flare nut (b): 16 N·m (1.6 kg-m, 11.5 lb-ft)

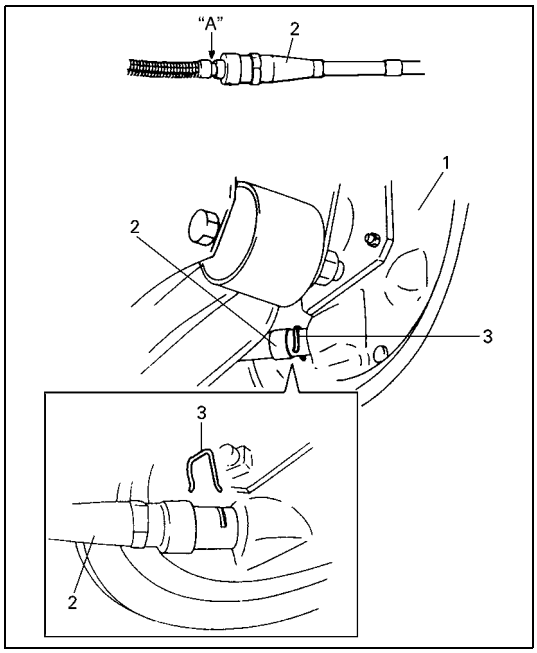

15) Apply water tight sealant where brake back plate (1) and parking brake cable contact.
Connect parking brake cable (2) to brake back plate (right & left) and secure it with clip (3).

"A": Sealant 99000-31090

NOTE:

Check to ensure that clip is in good condition before installing it. If deformed or broken, replace.

16) Install parking brake cable clamps to trailing arm.
17) Install wheel speed sensors (right & left) and clamp wire securely (if equipped with ABS).
18) Install brake shoes (right & left) referring to "Brake Shoe Removal and Installation" in Section 5C.

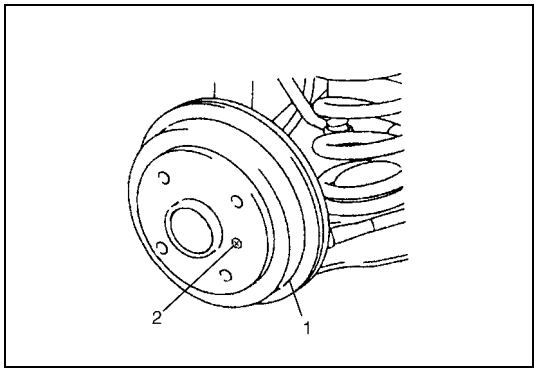

19) Install brake drums (1) (right & left) after making sure that inside of brake drum and brake shoes are free from dirt and oil. Then tighten brake drum screw (2).
20) Fill reservoir with brake fluid and bleed brake system. (For bleeding operation, refer to "Air Bleeding of Brake System" in Section 5.)
21) Refill differential gear housing with new specified gear oil. Refer to "Rear Differential Gear Oil Change" in Section 7F.

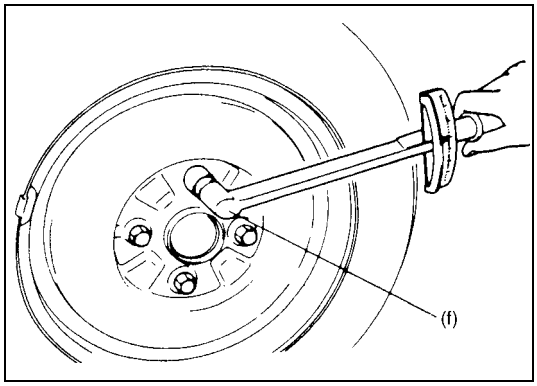

22) Install wheels and tighten wheel bolts to specified torque.

Tightening torque
Wheel bolt (f): 95 N·m (9.5 kg-m, 69.0 lb-ft)

23) Upon completion of all jobs, pull parking brake lever with about 200 N (20 kg, 44 lbs) load three to five times so as to obtain proper drum-to-shoe clearance.
Adjust parking brake cable referring to "Parking Brake Inspection and Adjustment" in Section 5.
24) Lower hoist.

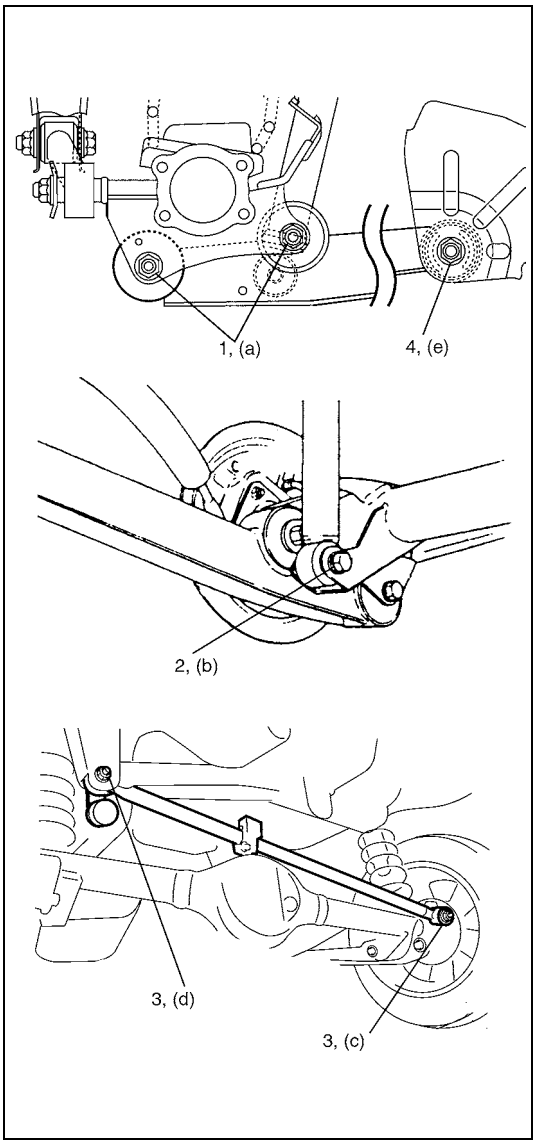

25) Tighten right and left trailing arm nuts (1), (4) and shock absorber lower bolts (2) to specified torque.
Tighten lateral rod nuts (3) to specified torque.

NOTE:

When tightening these bolts and nuts, be sure that vehicle is off hoist and in non loaded condition.

Tightening torque
Rear trailing arm nut
(a): 80 N·m (8.0 kg-m, 58.0 lb-ft)
Rear shock absorber lower bolt
(b): 63 N·m (6.3 kg-m, 45.5 lb-ft)
Lateral rod axle housing side nut
(c): 50 N·m (5.0 kg-m, 36.5 lb-ft)
Lateral rod body side nut
(d): 100 N·m (10.0 kg-m, 72.5 lb-ft)
Front trailing arm nut
(e): 90 N·m (9.0 kg-m, 65.0 lb-ft)

26) Check to ensure that brake drum is free from dragging and proper braking is obtained.
27) Perform brake test (foot brake and parking brake).
28) Check each installed part for oil leakage.

Tightening Torque Specifications

Fastening part	Tightening torque		
	N•m	kg-m	lb-ft
Brake back plate bolt	23	2.3	17.0
Brake pipe flare nut	16	1.6	11.5
Companion flange bolt	23	2.3	17.0
Front trailing arm nut	90	9.0	65.0
Lateral rod axle (housing) side nut	50	5.0	36.5
Lateral rod body side nut	100	10.0	72.5
LSPV spring end nut (2WD Model)	20	2.0	14.5
Rear differential carrier bolt (4WD Model)	23	2.3	17.0
Rear shock absorber lower bolt	63	6.3	45.5
Rear shock absorber upper nut	63	6.3	45.5
Rear trailing arm nut	80	8.0	58.0
Wheel bolt	95	9.5	69.0

Required Service Material

Material	Recommended SUZUKI product (Part Number)	Use
Lithium grease	SUZUKI SUPER GREASE (A) (99000-25010)···(for 4WD Model)	• Axle shaft oil seal • Wheel bearing
Sealant	SUZUKI BOND NO. 1215 (99000-31110)···(for 4WD Model)	• Joint seam of differential carrier and axle housing • Differential carrier bolt
Gear oil	For gear oil information, refer to SECTION 7F. (for 4WD Model)	• Differential gear (Rear axle housing)
Water tight sealant	SUZUKI SEALING COMPOUND 366E (99000-31090)	• Joint seam of axle housing and brake back plate
Brake fluid	DOT 4 or SEA J1704	• To fill master cylinder reservoir • To clean and apply to inner parts of caliper and wheel cylinder when they are disassembled.

Special Tool

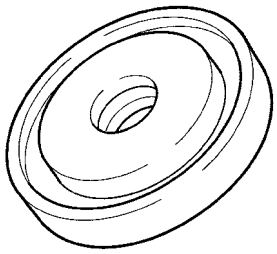 09944-67010 Oil seal installer (for 4WD Model)	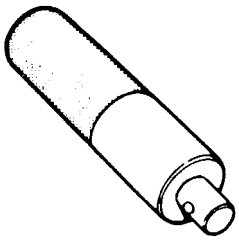 09924-74510 Installer attachment (for 4WD Model)	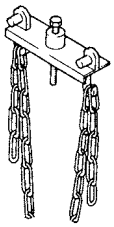 09927-18411 Universal puller (for 4WD Model)	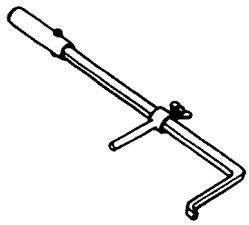 09913-50121 Oil seal remover (for 4WD Model)
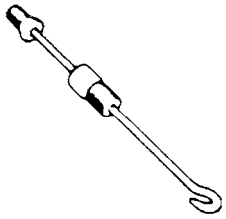 09942-15511 Sliding hammer	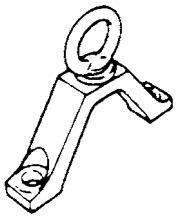 09943-17912 Brake drum remover	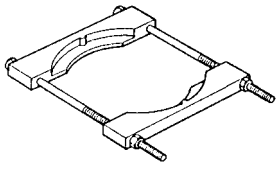 09921-57810 Bearing remover (for 4WD Model)	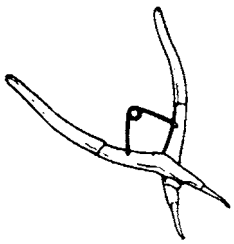 09900-06108 Snap ring pliers (for 2WD Model)
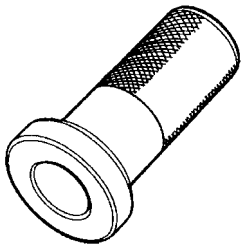 09913-75810 Bearing installer (for 2WD Model)	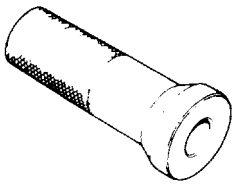 09913-76010 Rear wheel bearing installer (for 2WD Model)		

SECTION 3F

WHEELS AND TIRES

NOTE:

All wheel fasteners are important attaching parts in that they could affect the performance of vital parts and systems, and/or could result in major repair expense. They must be replaced with one of the same part number or with an equivalent part if replacement becomes necessary. Do not use a replacement part of lesser quality or substitute design. Torque values must be used as specified during reassembly to assure proper retention of all parts.

There is to be no welding as it may result in extensive damage and weakening of the metal.

CONTENTS

General Description 3F-2
Tire and Wheel Description 3F-2
Replacement Tires 3F-2
Replacement Wheel 3F-2
How to measure wheel run-out 3F-3
Wheel Bolts 3F-3
Matched Tires and Wheels 3F-3
Diagnosis 3F-4
Diagnosis Table 3F-4
Maintenance and Minor Adjustments 3F-4
Wheel Maintenance 3F-4
Inflation of Tires 3F-4
Tire Placard 3F-5
Tire Rotation 3F-5
On-vehicle Service 3F-6
Wheel Removal and Installation 3F-6
Tire Mounting and Dismounting 3F-7
Tire Repair 3F-7
Balancing Wheels 3F-7
General balance procedures 3F-8
Off-vehicle balancing 3F-8
On-vehicle balancing 3F-8
Tightening Torque Specifications 3F-8

General Description

Tire and Wheel Description

This vehicle is equipped with the following tire and wheel.

Tire and wheel size (Standard): 165/70R14 ··· 14 x 4 1/2 J, 175/65R14 ··· 14 x 5J or 185/60R15 ··· 15 x 5J

The tire is of tubeless type. The tire is designed to operate satisfactorily with loads up to the full rated load capacity when inflated to the recommended inflation pressures.

Correct tire pressures and driving habits have an important influence on tire life. Heavy cornering, excessively rapid acceleration, and unnecessary sharp braking increase tire wear.

Replacement Tires

When replacement is necessary, the original equipment type tire should be used. Refer to the tire placard. Replacement tires should be of the same size, load range and construction as those originally on the vehicle. Use of any other size or type tire may affect ride, handling, speedometer / odometer calibration, vehicle ground clearance and tire or snow chain clearance to the body and chassis.

It is recommended that new tires be installed in pairs on the same axle. If necessary to replace only one tire, it should be paired with the tire having the most tread, to equalize braking traction.

WARNING:

Do not mix different types of tires on the same vehicle such as radial, bias and bias-belted tires except in emergencies, because handling may be seriously affected and may result in loss of control.

kPa	kgf/cm²	psi
160	1.6	23
180	1.8	26
200	2.0	29
220	2.2	32
240	2.4	35
260	2.6	38
280	2.8	41
300	3.0	44

The metric term for tire inflation pressure is the kilo pascal (kPa). Tire pressures is usually printed in kPa, kgf/cm^2 and psi on the tire placard.

Metric tire gauges are available from tool suppliers.

The chart, shown left table, converts commonly used inflation pressures from kPa to kgf/cm^2 and psi.

Replacement Wheel

Wheels must be replaced if they are bent, dented, have excessive
lateral or radial run-out, air leak through welds, have elongated bolt holes, if lug nuts won't stay tight, or if they are heavily rusted.

Wheels with greater run-out than shown in figure below may cause objectionable vibrations.

Replacement wheels must be equivalent to the original equipment wheels in load capacity, diameter, rim with offset and mounting configuration. A wheel of improper size or type may affect wheel and bearing life, brake cooling, speedometer / odometer calibration, vehicle ground clearance and tire clearance to body and chassis.

How to measure wheel run-out

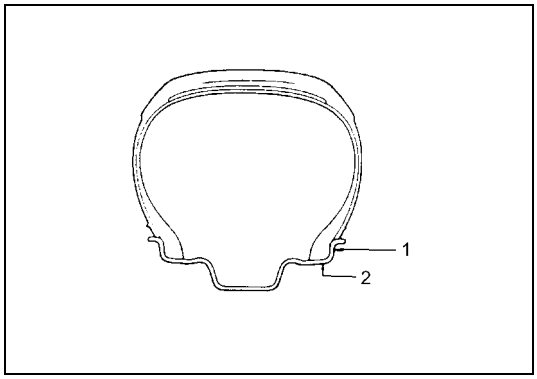

To measure the wheel run-out, it is necessary to use an accurate dial indicator. The tire may be on or off the wheel. The wheel should be installed to the wheel balancer of the like for proper measurement.
Take measurements of both lateral run-out (1) and radial run-out (2) at both inside and outside of the rim flange. With the dial indicator set in place securely, turn the wheel one full revolution slowly and record every reading of the indicator.

NOTE:

Total indicator reading ignore indicator "JUMP" due to weld seams, paint runs, scratches, etc.

When the measured run-out exceeds the specification and correction by the balancer adjustment is impossible, replace the wheel.If the reading is affected by welding, paint or scratch, it should be ignored.

Run-out limit

Radial run-out limit	Lateral run-out limit
2.0 mm (0.078 in.)	2.0 mm (0.078 in.)

Wheel Bolts

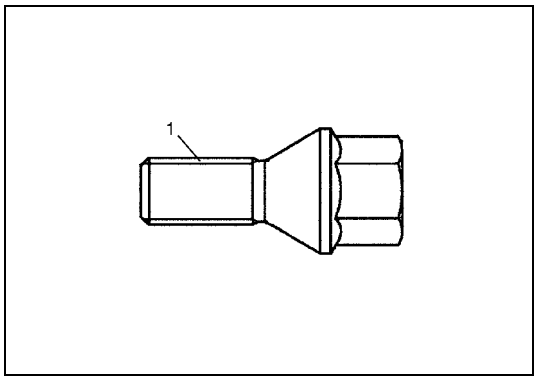

All models use metric lug wheel bolts.

Metric lug bolt size

(1): M12 x 1.5

Matched Tires and Wheels

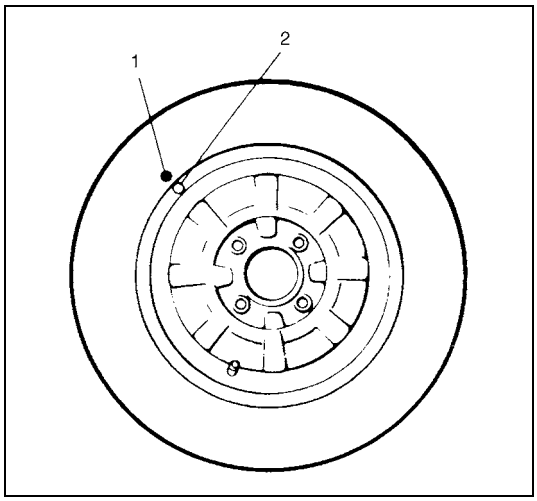

Tires and wheels are match-mounted at the assembly plant.
This means that the radially stiffest part of the tire, or "high spot", is matched to the smallest radius or "low spot" of the wheel.
This is done to provide the smoothest possible ride.
The "high spot" of the tire is originally marked by paint dot (1) on the outboard sidewall. This paint dot will eventually be washed off the tire. The "low spot" of the wheel is originally marked by paint dot (2) on the wheel rim-flange. Properly assembled, the wheel rims' paint dot should be aligned with the tires' paint dot as shown in left figure.
Whenever a tire is dismounted from its wheel, it should be remounted so that the tire and wheel are matched. If the tire's paint dot cannot be located, a line should be scribed on the tire and wheel before dismounting to assure that it is remounted in the same position.

Diagnosis

Diagnosis Table

Refer to SECTION 3.

Maintenance and Minor Adjustments

Wheel Maintenance

Wheel repairs that use welding, heating, or peening are not approved.
All damaged wheels should be replaced.

Inflation of Tires

The pressure recommended for any model is carefully calculated to give a satisfactory ride, stability, steering, tread wear, tire life and resistance to bruises.
Tire pressure, with tires cold, (after vehicle has set for three hours or more, or driven less than one mile) should be checked monthly or before any extended trip. Set to the specifications on the tire placard located on the left door (right door for right-hand side steering vehicle) lock pillar.
It is normal for tire pressure to increase when the tires become hot during driving.
Do not bleed or reduce tire pressure after driving. Bleeding reduces the “Cold Inflation Pressure”.

Higher than recommended pressure can cause:

- Hard ride
- Tire bruising or carcass damage
- Rapid tread wear at center of tire

Unequal pressure on same axle can cause:

- Uneven braking
- Steering lead
- Reduced handling
- Swerve on acceleration

Lower than recommended pressure can cause:

- Tire squeal on turns
- Hard Steering
- Rapid and uneven wear on the edges of the tread
- Tire rim bruises and rupture
- Tire cord breakage
- High tire temperature
- Reduced handling
- High fuel consumption

Valve caps should be on the valves to keep dust and water out.

Tire Placard

The tire information placard is located on the left door (right door for right-hand side steering vehicle) lock pillar and should be referred to for tire information.
The placard lists the maximum load, tire size and cold tire pressure where applicable.

NOTE:

Whether rim size and/or maximum load are listed or not depends on regulations of each country.

Tire Rotation

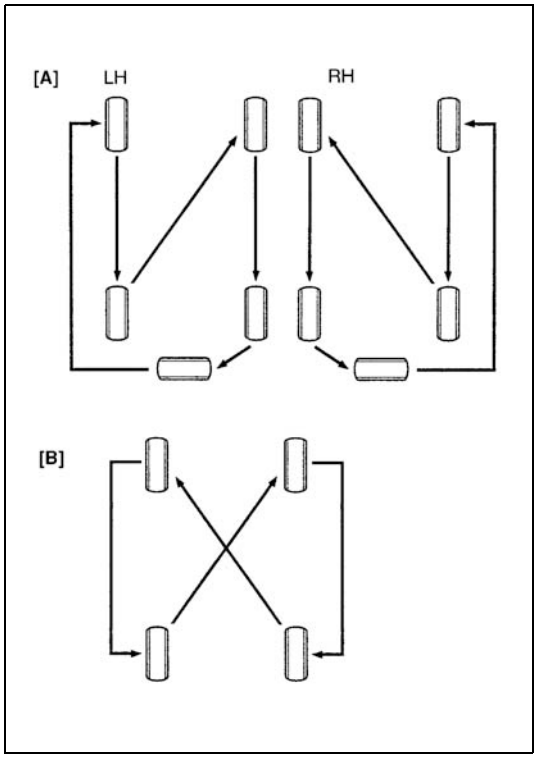

To equalize wear, rotate tires according to left figure. Radial tires should be rotated periodically. Set tire pressure.

NOTE:

Due to their design, radial tires tend to wear faster in the shoulder area, particularly in front positions. This makes regular rotation especially necessary.

[A]:	5-tire rotation NOTE: Applicable to vehicles equipped with 5 tires including spare tire all of which are identical in size
[B]:	4-tire rotation
LH:	Left-hand steering vehicle
RH:	Right-hand steering vehicle

On-vehicle Service

Wheel Removal and Installation

REMOVAL

WARNING:
Do not removal all of the wheel bolts at once, because all the wheels of this vehicle are mounted by the wheel bolts.
Leave a bolt at least not to drop the wheel.
Support the wheel and/or tire and then remove the bolt(s) left with the wheel.

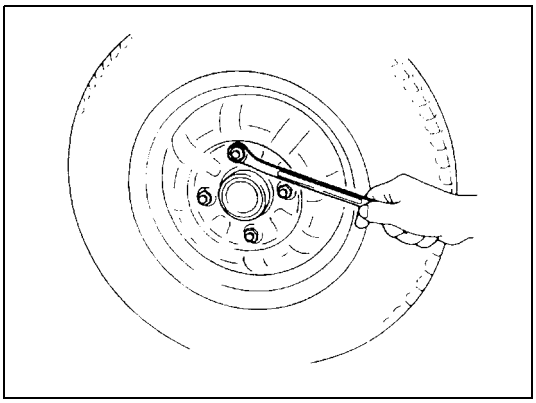

1) Loosen wheel bolts by approximately 180 ° (half a rotation).
2) Hoist vehicle.
3) Make sure that the Vehicle will not fall off by trying to more vehicle body in both ways.
4) Remove wheel bolts except one.
5) Support the wheel and/or tire not to drop the wheel and then remove the bolt left with the wheel.

CAUTION:
Never use heat to loosen tight wheel because application of heat to wheel can shorten life of wheel and damage wheel bearings.

INSTALLATION

For installation, reverse removal procedure, noting the flowing. Wheel bolts must be tightened in sequence and to proper torque to avoid bending wheel or brake disc, left figure.

NOTE:
Before installing wheels, remove any build-up of corrosion on wheel mounting surface and brake disc mounting surface by scraping and wire brushing. Installing wheels without good metal-to-metal contact at mounting surfaces can cause wheel bolts to loosen, which can later allow a wheel to come off while vehicle is moving.

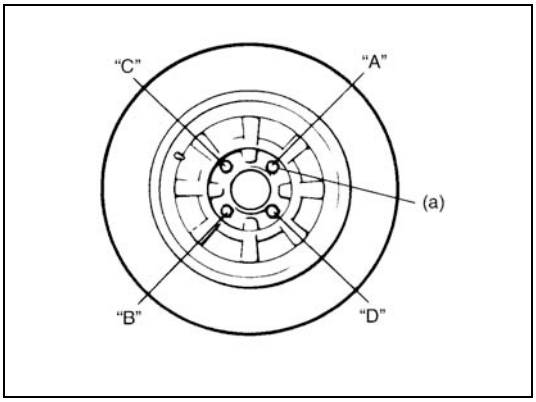

Tightening order
"A" – "B" – "C" – "D":

Tightening torque
Wheel bolt (a): 95 N·m (9.5 kg-m, 69.0 lb-ft)

Tire Mounting and Dismounting

Use a tire changing machine to mount or dismount tires. Follow equipment manufacturer's instructions. Do not use hand tools or tire irons alone to change tires as they may damage tire beads or wheel rim.

Rim bead seats should be cleaned with a wire brush or coarse steel wool to remove lubricants, old rubber and light rust. Before mounting or dismounting a tire, bead area should be well lubricated with approved tire lubricant.

After mounting, inflate to specified pressure shown on tire information placard so that beads are completely seated.

WARNING:

Do not stand over tire when inflating. Bead may break when bead snaps over rim's safety hump and cause serious personal injury.

Do not exceed specified pressure when inflating. If specified pressure will not seat beads, deflate, re-lubricate and reinflate.

Over inflation may cause bead to break and cause serious personal injury.

Install valve core and inflate to proper pressure.

Tire Repair

There are many different materials and techniques on the market to repair tires. As not all of these work on all types of tires, tire manufacturers have published detailed instructions on how and when to repair tires. These instructions can be obtained from each tire manufacturer.

Balancing Wheels

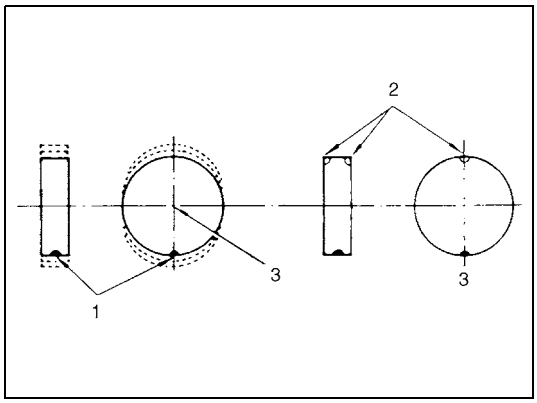

There are two types of wheel and tire balance: static and dynamic.

Static balance, as shown in left figure, is the equal distribution of weight around the wheel. Wheels that are statically unbalanced cause a bouncing action called tramp. This condition will eventually cause uneven tire wear.

1. Heavy spot wheel tramp
2. Add balance weights here.
3. C/L of spindle

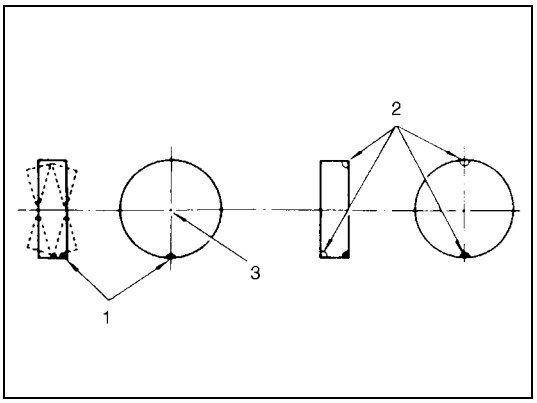

Dynamic balance, as shown in left figure, is the equal distribution of weight on each side of the wheel center line so that when the tire spins there is no tendency for the assembly to move from side to side. Wheels that are dynamically unbalanced may cause shimmy.

1. Heavy spot wheel shimmy
2. Add balance weights here.
3. C/L of spindle

General balance procedures

Deposits of mud, etc. must be cleaned from inside of rim.

WARNING:
Stones should be removed from the tread in order to avoid operator injury during spin balancing and to obtain good balance.

Each tire should be inspected for any damage, then balanced according to equipment manufacturer's recommendation.

Off-vehicle balancing

Most electronic off-vehicle balancers are more accurate than the on-vehicle spin balancers. They are easy to use and give a dynamic (two plane) balance. Although they do not correct for drum or disc unbalance as does on-vehicle spin balancing, this is overcome by their accuracy, usually to within 1/8 ounce.

On-vehicle balancing

On-vehicle balancing methods vary with equipment and tool manufacturers. Be sure to follow each manufacturer's instructions during balancing operation.

WARNING:
Wheel spin should be limited to 55 km/h (35 mph) as indicated on speedometer.
This limit is necessary because speedometer only indicates one-half of actual wheel speed when one drive wheel is spinning and the other drive wheel is stopped.
Unless care is taken in limiting drive wheel spin, spinning wheel can reach excessive speeds. This can result in possible tire disintegration or differential failure, which could cause serious personal injury or extensive vehicle damage.

Tightening Torque Specifications

Fastening part	Tightening torque		
	N•m	kg-m	lb-ft
Wheel bolts	95	9.5	69.0

SECTION 4A

FRONT DRIVE SHAFT

CONTENTS

General Description 4A-1
Diagnosis 4A-1
On-Vehicle Service 4A-2
Front Drive Shaft Assembly Construction 4A-2
Front Drive Shaft Assembly Removal and Installation 4A-3
Front Drive Shaft Assembly Inspection 4A-4
Front Drive Shaft Components 4A-5
Front Drive Shaft Disassembly and Assembly 4A-6
Front Drive Shaft Inspection 4A-18
Tightening Torque Specification 4A-19
Required Service Material 4A-19
Special Tools 4A-19

General Description

A constant velocity double offset joint (DOJ) is used on the differential side of both the right and left side drive shaft assembly. And, a constant velocity ball joint is used on the wheel side of both the right and left drive shaft assemblies. The drive shaft can slide through the DOJ in the extension/contraction direction.

Diagnosis

Condition	Possible Cause	Correction
Abnormal noise	Wear or breakage of the drive shaft joint	Replace.

On-Vehicle Service

Front Drive Shaft Assembly Construction

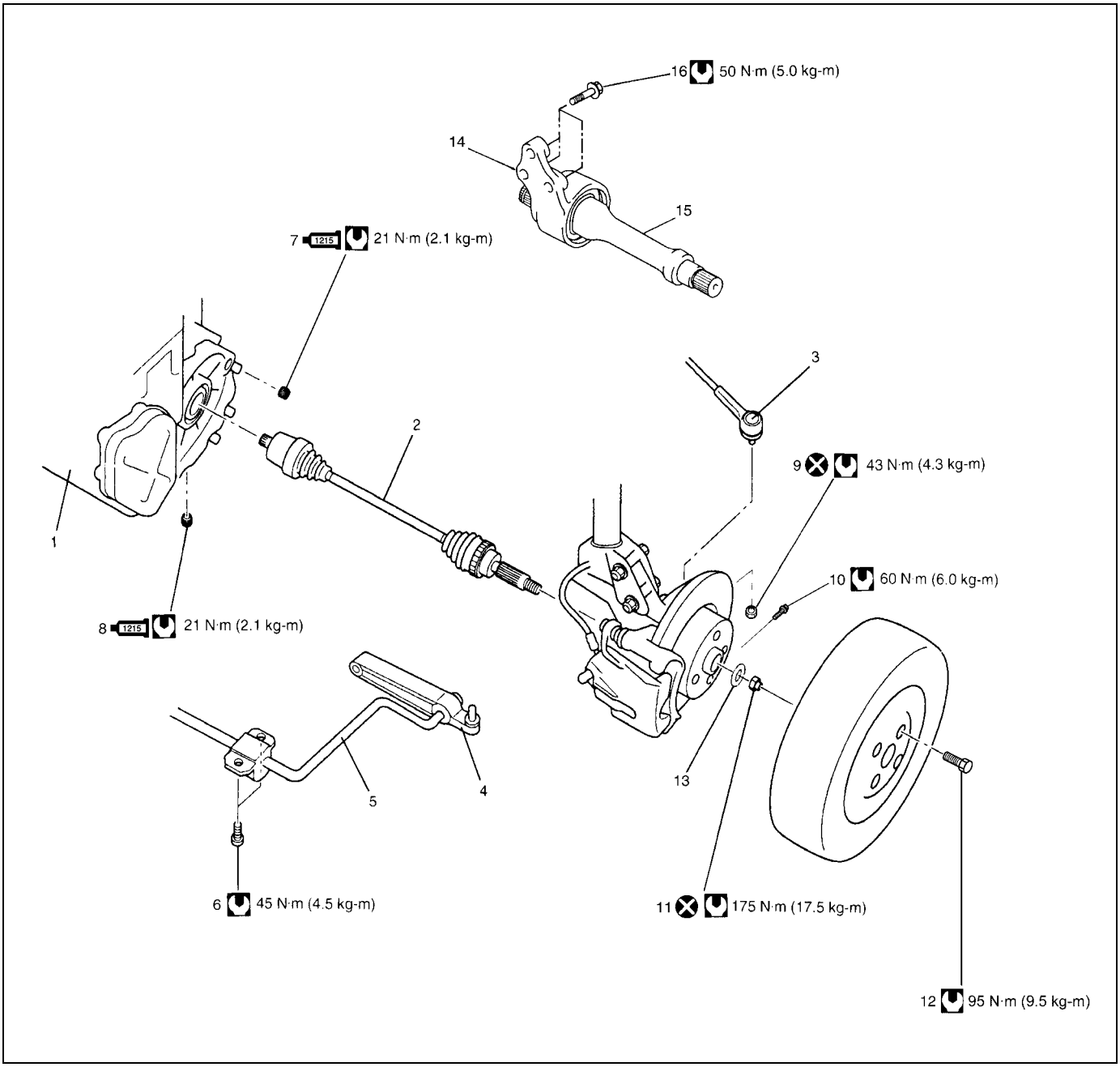

1. Transaxle	7. Oil filler/level plug: Apply sealant 99000-31110 to plug thread	13. Drive shaft washer
2. Drive shaft assembly	8. Oil drain plug: Apply sealant 99000-31110 to plug thread	14. Center bearing support
3. Tie-rod end	9. Tie-rod end nut	15. Center shaft
4. Suspension control arm	10. Ball stud bolt	16. Center bearing support bolts
5. Stabilizer	11. Drive shaft nut	Do not reuse.
6. Stabilizer mount bracket bolt	12. Wheel bolt	Tightening torque

Front Drive Shaft Assembly Removal and Installation

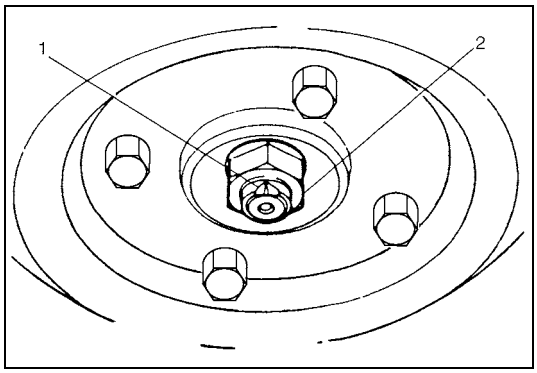

Removal

CAUTION:
To prevent the breakage of boots, be careful not to damage the boots when removing drive shaft assembly.

1) Undo caulking (1) and remove drive shaft nut (2).
2) Loosen wheel bolts.
3) Hoist vehicle.
4) Remove wheel.
5) Drain transaxle oil and transfer oil referring to “Manual Transaxle Oil Change” in Section 7A1 and “Transfer Oil Change” in Section 7D.
6) Remove tie-rod end nut.

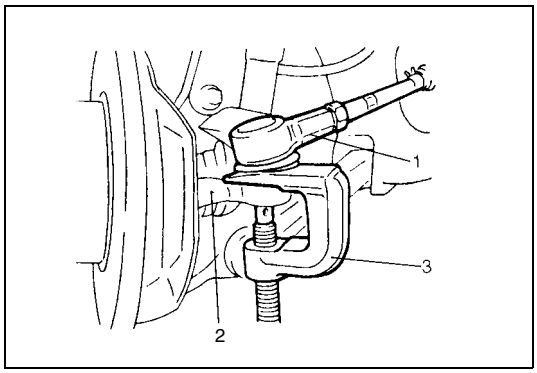

7) Disconnect tie-rod end (1) from steering knuckle (2) by using puller (3).

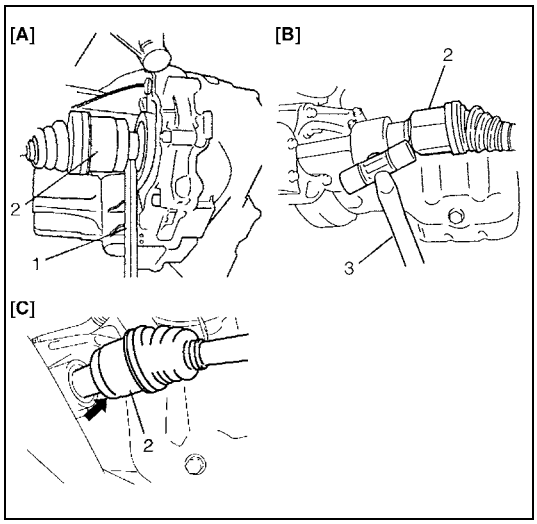

8) Pull out drive shaft joint (2) as follows.
   a) Left side of 2WD vehicle and 4WD vehicle
      Using tire lever (1), pull out drive shaft joint (2) so as to release snap ring fitting of joint spline at differential side.
   b) Right side of 2WD vehicle
      Using plastic hammer (3), drive out drive shaft joint (2) so as to release snap ring fitting of joint spline at center shaft.
   c) Right side of 4WD vehicle
      Using plastic hammer, drive out drive shaft joint (2) so as to release snap ring fitting of joint spline at transfer side.

[A] : Left side of 2WD vehicle and 4WD vehicle
[B] : Right side of 2WD vehicle
[C] : Right side of 4WD vehicle

9) Remove two stabilizer mount brackets from vehicle body.

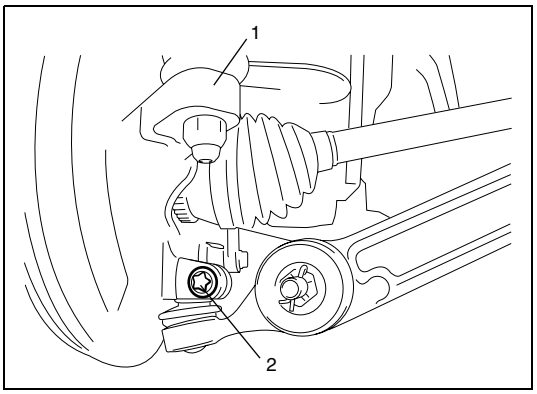

10) Disconnect front suspension control arm ball joint stud from steering knuckle (1) by pushing down stabilizer bar after removing ball joint bolt (2).
11) Remove drive shaft assembly.

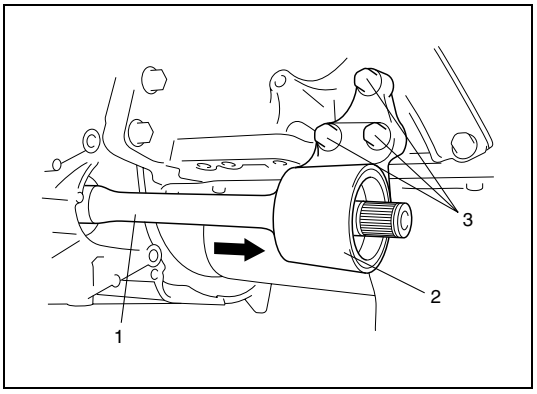

12) For vehicle with center shaft, remove center bearing support bolts (3) and remove center bearing support (2) with center shaft (1) from differential side gear.

Installation

CAUTION:
- **Be careful not to damage oil seals and boots when installing drive shafts.**
- **Do not hit joint boot with hammer. Inserting joint only by hands is allowed.**
- **Make sure that differential side joint is inserted fully and its snap ring is seated as it was.**

Install drive shaft assembly by reversing removal procedure noting the following points.
- Install wheel side joint to steering knuckle first, and then differential side joint to transaxle.
- Tighten each bolt and nut to the specified torque referring to “Front Drive Shaft Components” in this section.
- Apply sealant to drain plug of manual transaxle.
- Fill transaxle with oil as specified referring to “Manual Transaxle Oil Change” in Section 7A1.
- Check toe setting and adjust as required.

Front Drive Shaft Assembly Inspection

Inspection

- Check boots for breakage or deterioration.
- Check wheel side joint for rattle or smoothness.
- Check differential side joint for smoothness.
  If any abnormality is found, replace.

Front Drive Shaft Components

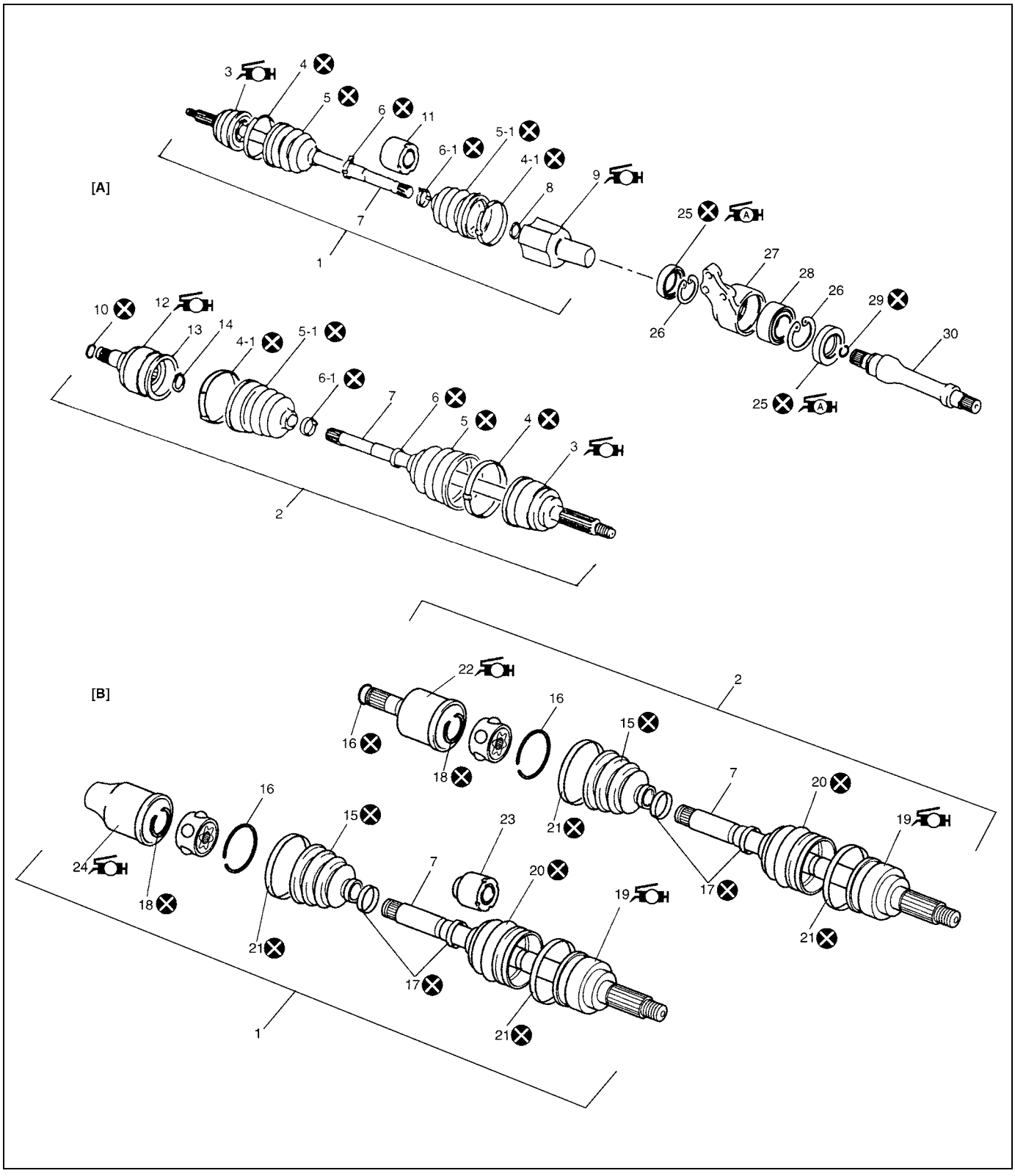

[A] : 2WD model	8. Snap ring	20. Boot (Wheel side)
[B] : 4WD model	9. Center shaft side joint (Constant velocity DOJ joint) : Apply grease included in spare parts to DOJ joint.	21. Boot big band
1. Right side drive shaft assembly	10. Snap ring	22. Differential side joint : Apply grease included in spare part to joint.
2. Left side drive shaft assembly	11. Damper	23. Damper (RH)
3. Wheel side joint (constant velocity ball joint) : Apply grease included in spare parts to ball joint.	12. Differential side joint (Constant velocity DOJ) : Apply grease included in spare parts to DOJ	24. Transfer side joint (RH) : Apply grease included in spare part to joint.
4. Ball joint boot big band	13. Snap ring	25. Oil seal
4-1. DOJ boot big band	14. Retaining ring	26. Center bearing support circlip
5. Ball joint boot	15. Boot (Differential or transfer side)	27. Center bearing support
5-1. DOJ boot	16. Circlip	28. Center bearing
6. Ball joint boot small band	17. Boot small band	29. Snap ring
6-1. DOJ boot small band	18. Snap ring	30. Center shaft
7. Drive shaft for DOJ	19. Wheel side joint (Constant velocity joint) : Apply grease included in spare part to joint.	Do not reuse.

Front Drive Shaft Disassembly and Assembly

Disassembly

For 2WD vehicle

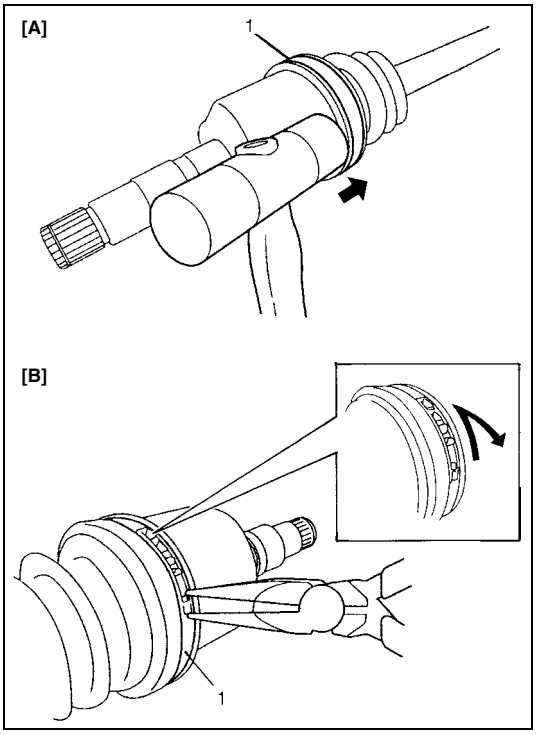

CAUTION:
Disassembly of wheel side joint is not allowed. If any abnormality is found, replace it as assembly.

1) Remove differential side boot big band (1) as follows.
   a) For boot big band without joint
      i) Remove boot big band by tapping boot and band with plastic hammer. If it is hard to remove boot big band, cut it using a nipper or a iron saw with care not to damage DOJ housing.
   b) For boot big band with joint
      i) Draw hooks of boot big band together and remove band.

[A] : For boot big band without joint
[B] : For boot big band with joint

2) Remove DOJ from shaft as follows.

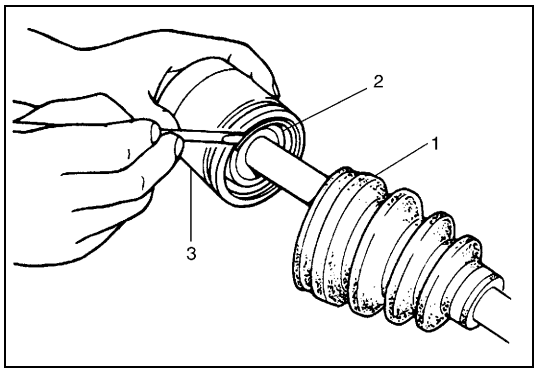

a) Right side
   i) Side boot (1) toward the center of shaft and remove circlip (2) from joint housing, and then take shaft out of joint housing (3).

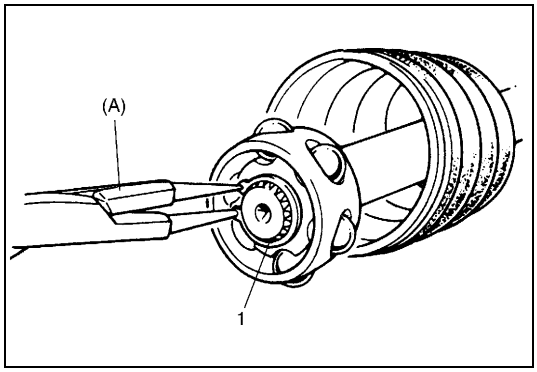

   ii) Wipe off grease and remove snap ring (1) used to fix cage by using special tool.

Special tool
(A) : 09900-06107

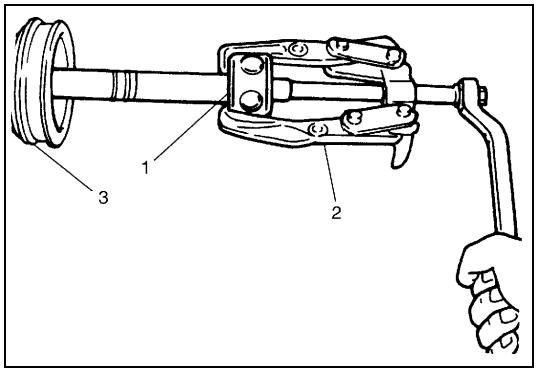

   iii) Draw away cage (1) by using bearing puller (2), and then remove boot (3) from shaft.

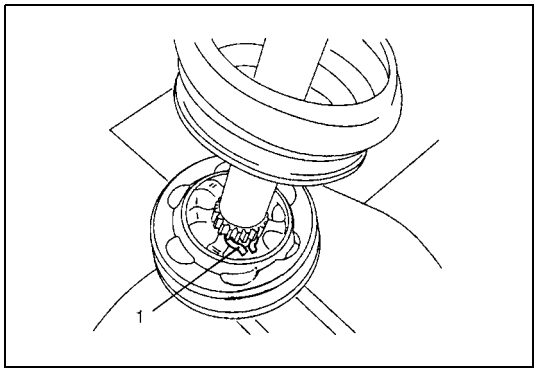

b) Left side
   i) Fold over boot and remove old grease so that retaining ring (1) is accessible.

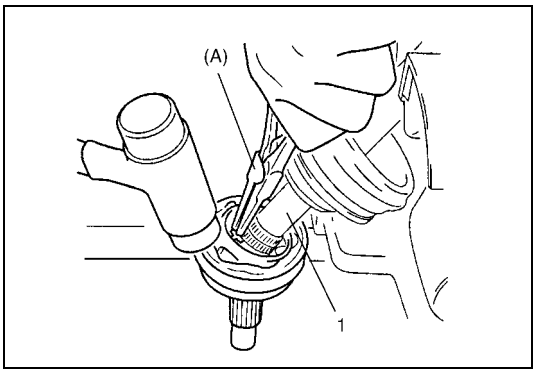

ii) Clamp drive shaft in soft jawed vise, and then open retaining ring using special tool and tap DOJ of drive shaft (1) using plastic hammer until retaining ring no longer engages in groove of shaft.

Special tool
(A) : 09900-06107

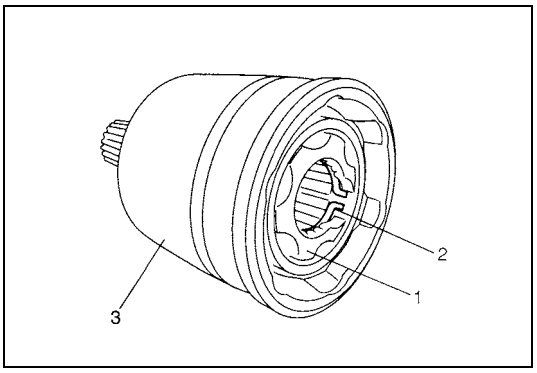

iii) Remove cage (1) with retaining ring (2) from housing (3) if necessary.

3) Remove boot small band, and then pull out differential side boot from shaft.
4) Pull out damper through shaft.

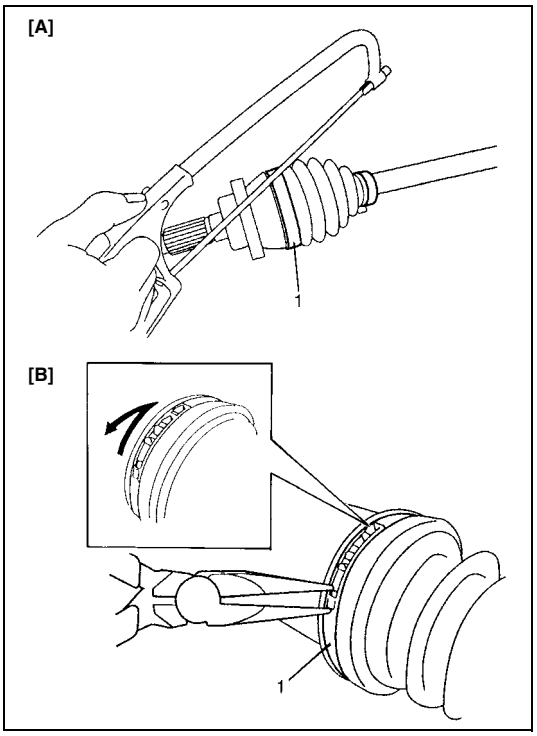

5) Remove wheel side boot big band (1) as follows.
   a) For boot big band without joint
      i) Cut boot big band using a iron saw or a nipper with care not to damage wheel side joint housing.
   b) For boot big band with joint
      i) Draw hooks of boot big band together and remove band.
6) Remove wheel side small band, and then pull out wheel side boot from shaft.

[A] : For boot big band without joint
[B] : For boot big band with joint

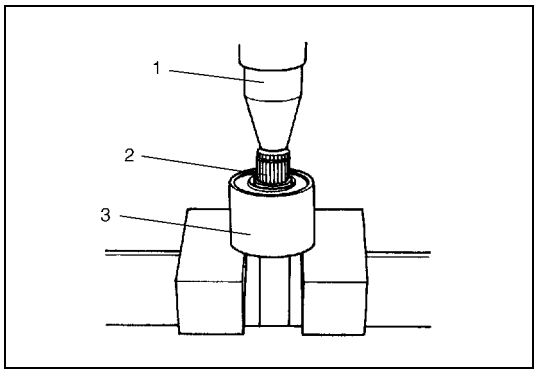

For center shaft and center bearing support

1) Using hydraulic press (1), draw out center shaft (2) from center bearing.
2) Remove oil seals from center bearing support (3).

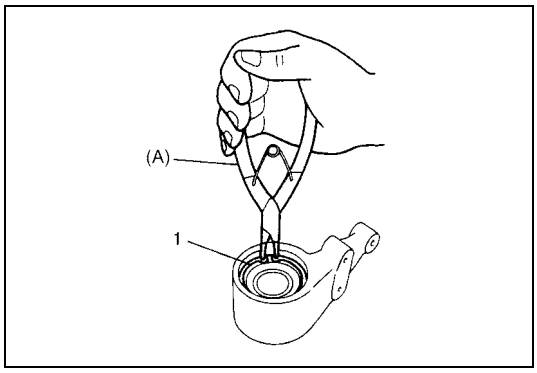

3) Remove bearing support circlips (1).

Special tool
(A) : 09900-06108

4) Remove center bearing from center bearing support.

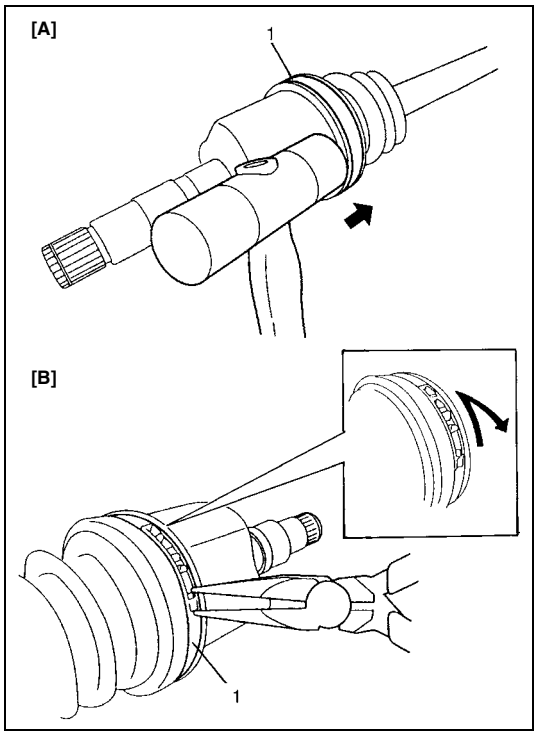

For 4WD vehicle

CAUTION:
Do not disassemble wheel side joint. If any malcondition is found in any joint, replace it as assembly.

1) Remove differential side boot big band (1) as follows.
   a) For boot big band without joint
      i) Remove boot big band by tapping boot and band with plastic hammer. If it is hard to remove boot big band, cut it using a nipper or a iron saw with care not to damage differential side joint housing.
   b) For boot big band with joint
      i) Draw hooks of boot big band together and remove band.

[A] : For boot big band without joint
[B] : For boot big band with joint

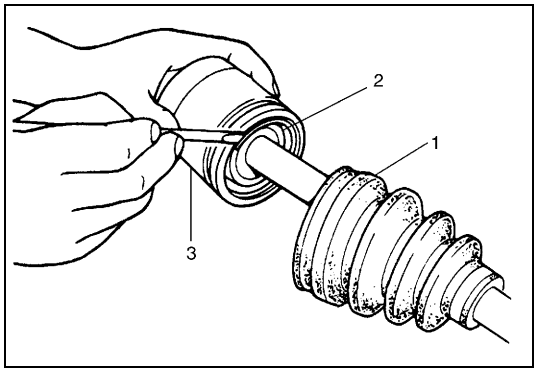

2) Side boot (1) toward the center of shaft and remove snap ring (2) from joint housing, and then take shaft out of joint housing (3).

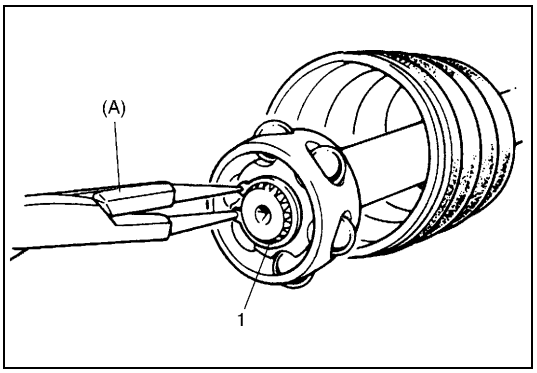

3) Wipe off grease and remove circlip (1) used to fix cage by using special tool.

Special tool
(A) : 09900-06107

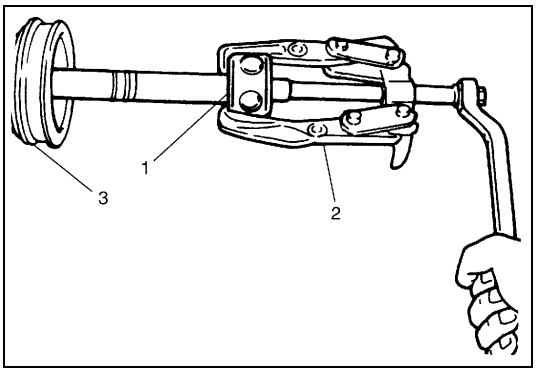

4) Draw away cage (1) by using bearing puller (2), and then remove boot (3) from shaft.

5) Remove small boot band, and then pull out differential side boot from shaft.
6) Pull out damper through shaft. (if equipped)
7) Remove boot bands of wheel side joint boot, and then pull out boot through shaft.

Assembly

For 2WD vehicle

1) Wash disassembled parts (except boots), and then dry parts completely by blowing air.
2) Clean boots with cloth.

NOTE:

Do not wash boot in degreaser, such as gasoline or kerosene, etc. Washing in degreaser causes deterioration of boot.

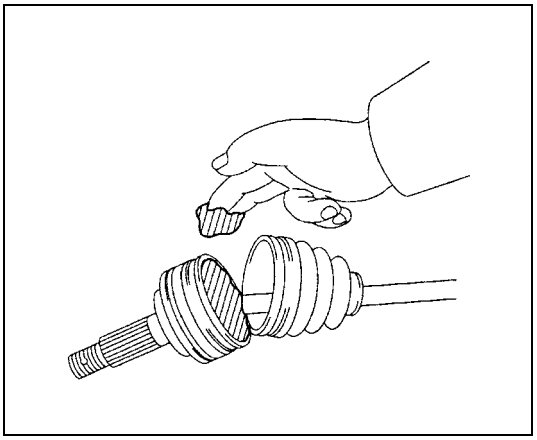

3) Install new wheel side boot on shaft temporarily.
4) Apply grease in the supplied parts to wheel side joint.

Color
For right side shaft : Black
For left side shaft : Black

Amount
For right side shaft : 60 – 80 g (2.1 – 2.8 oz)
For left side shaft : About 110 g (3.85 oz)

5) Fit wheel side boot onto grooves of housing and shaft.

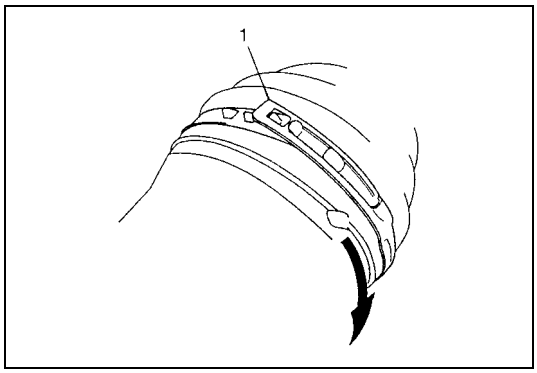

6) Place new wheel side big band onto boot putting band outer end (1) against forward rotation (2) as shown in figure.

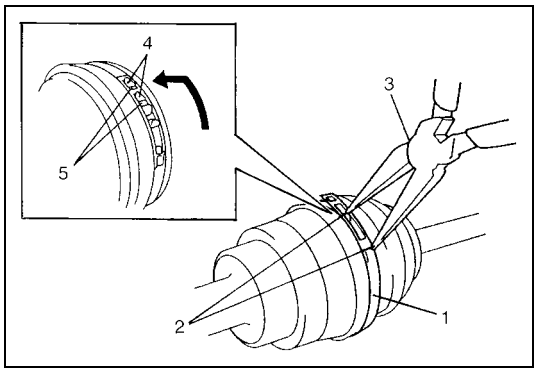

7) Fasten boot big band (1) by drawing hooks (2) with plier (3) and engage hooks (4) in slot and window (5).

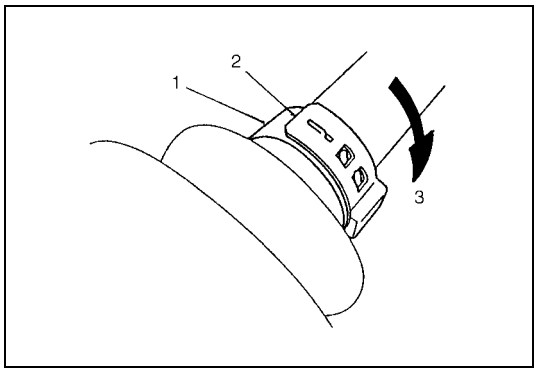

8) Place new wheel side small band (1) onto boot putting band outer end (2) against forward rotation (3) as shown in figure.

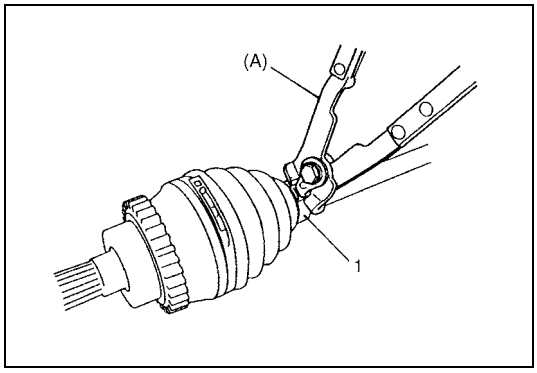

9) Confirm that wheel side boot is not stretched or contracted, and then fasten boot small band (1) securely using special tool.

Special tool
(A) : 09943-55010

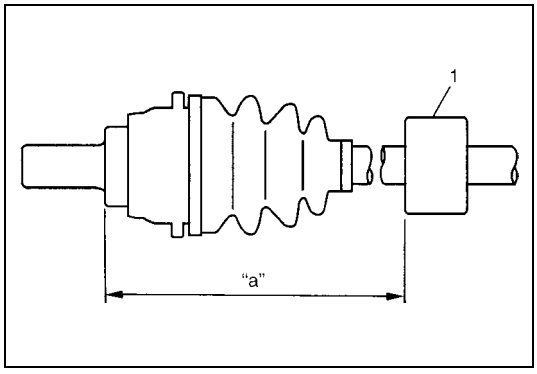

10) Install damper (1) on right side drive shaft according to dimension specified below.

Length "a": 174 – 180 mm (6.83 – 7.06 in.)

11) Install cage into joint housing
  a) Right side
    i) Set new differential side small band and differential side boot on shaft temporarily.

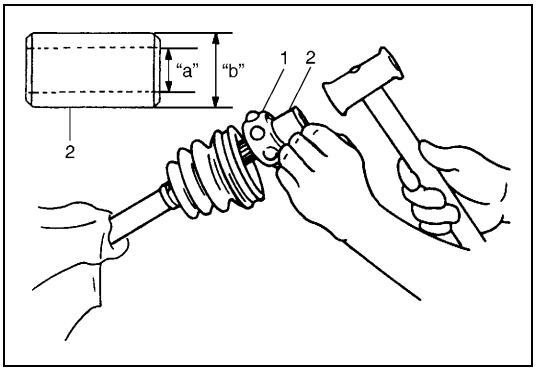

    ii) Driver in the cage (1) by using pipe (2).

Drive shaft joint cage installing pipe diameter
"a" : 25.0 mm (0.984 in.) or more
"b" : 33.0 mm (1.299 in.) or less

CAUTION:
Install cage directing smaller outside diameter side to wheel side.

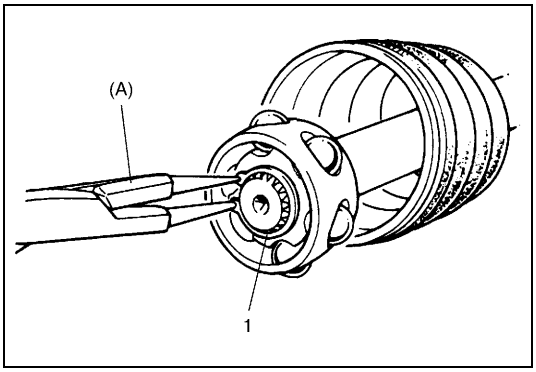

    iii) Install circlip (1) by using special tool.

Special tool
(A) : 09900-06107

    iv) Apply grease in the supplied parts to the entire surface of cage.

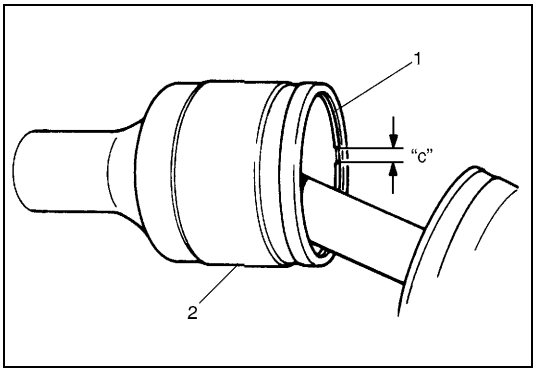

    v) Insert cage into joint housing and fit snap ring (1) into groove of joint housing (2).

CAUTION:
Position opening of snap ring "c" so that it will not be lined up with a ball.

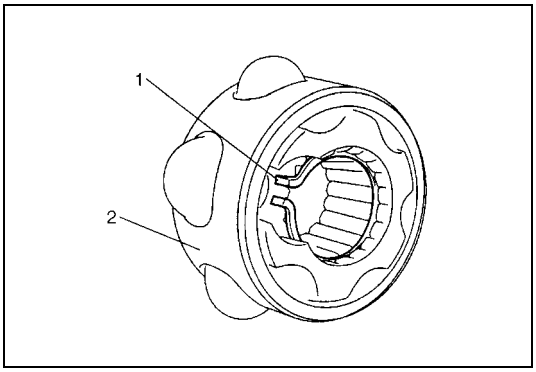

  b) Left side
    i) Install retaining ring (1) to cage (2).

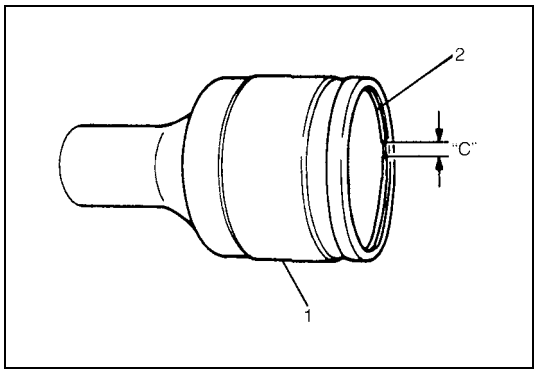

ii) Insert cage into housing (1) and fit snap ring (2) into groove of housing.

CAUTION:
Position opening of snap ring "c" so that it will not be lined up with a ball.

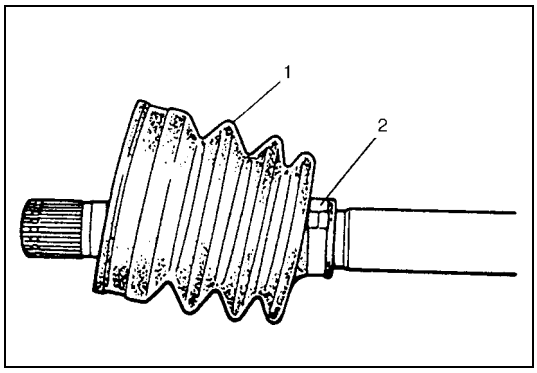

iii) Set new differential side small band (2) and differential side boot (1) on shaft temporarily.

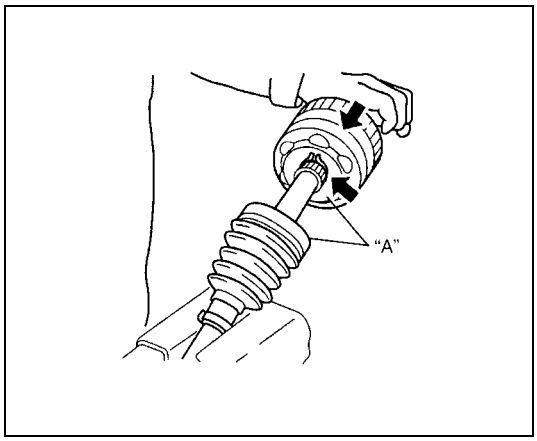

12) Apply grease in the supplied parts to DOJ and inside of housing.

Color
For right side shaft : Black and grey
For left side shaft : Black

Amount
For right side shaft : 75 – 95 g (2.7 – 3.4 oz)
For left side shaft : About 100 g (3.6 oz)

13) Place DOJ onto spline of drive shaft and drive onto drive shaft by using plastic hammer until retaining ring engages.

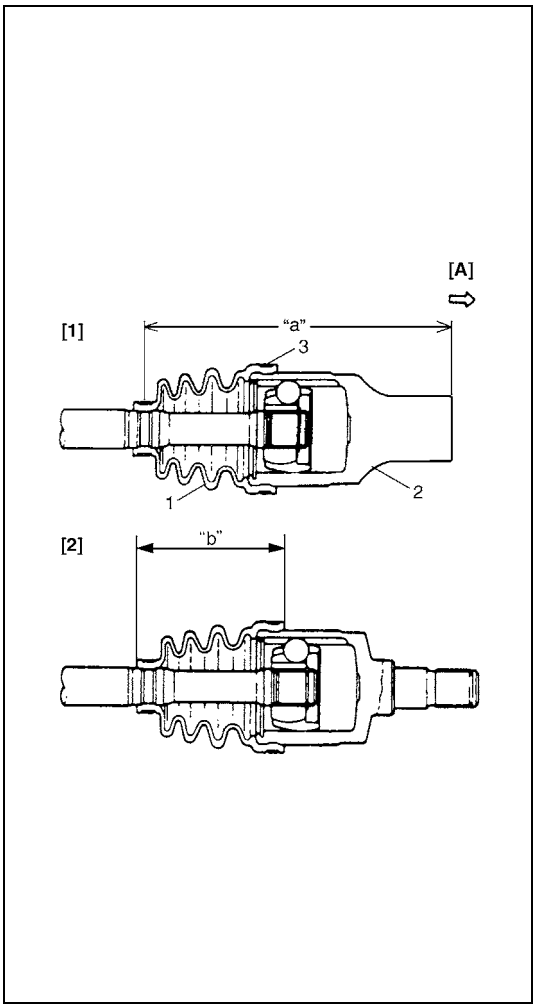

14) Install boot on joint housing.
   a) Right side
      When fixing boot (1) to joint housing (2) with differential side big band (3), adjust so that measurements become as indicated below.
   b) Left side
      Fit boot to grooves of shaft and housing and adjust length "d" to specification below.
      Insert screwdriver into boot and allow air to enter boot so that air pressure in boot becomes the same as atmospheric pressure.

Length "a": 187.8 mm (7.39 in.)
"b": 94.5 mm (3.72 in.)

[A] :	Differential side
[1] :	Right side
[2] :	Left side

CAUTION:
- **To prevent any problem caused by washing solution, do not wash joint boots. Degreasing of those parts with cloth in allowed.**
- **Do not squeeze or distort boot when fastening it with bands.**
  Distorted boot caused by squeezing air may reduce its durability.

15) Install and fasten new big and small bands at the position of step 14) referring to steps 6) to 9).

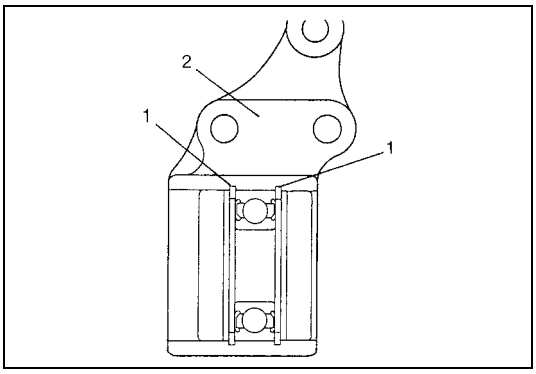

For center shaft and center bearing support

Install center shaft by reversing removal procedure and noting following points

- When installing bearing support circlip (1), make sure that it fits in circlip groove in center bearing support (2) securely as shown.

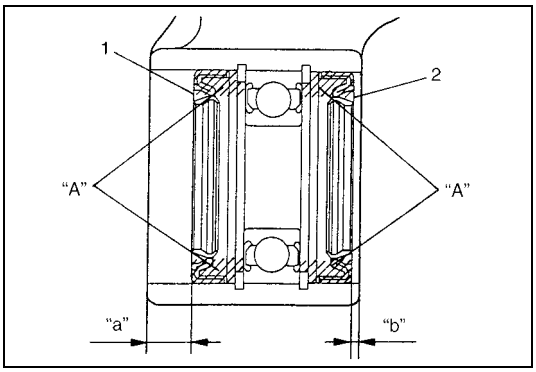

- When installing left oil seal (1) and right oil seal (2), use care so that oil seals in proper direction and position as shown figure.

Distance "a": 11 – 12 mm (0.43 – 0.47 in.)
"b": 2 – 3 mm (0.08 – 0.12 in.)

- Be sure to apply grease to oil seal lip and bearing side space indicated in figure.

"A" : Grease 99000-25010

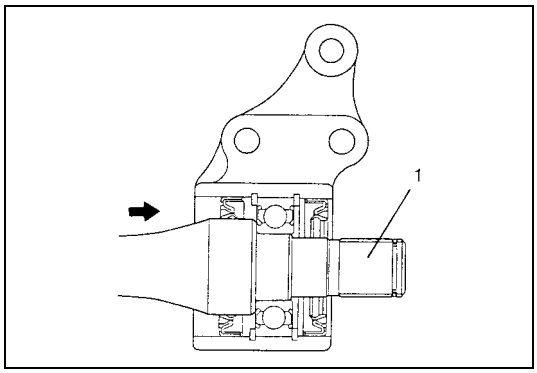

- Press-fit center shaft (1) from left oil seal side.

For 4WD vehicle

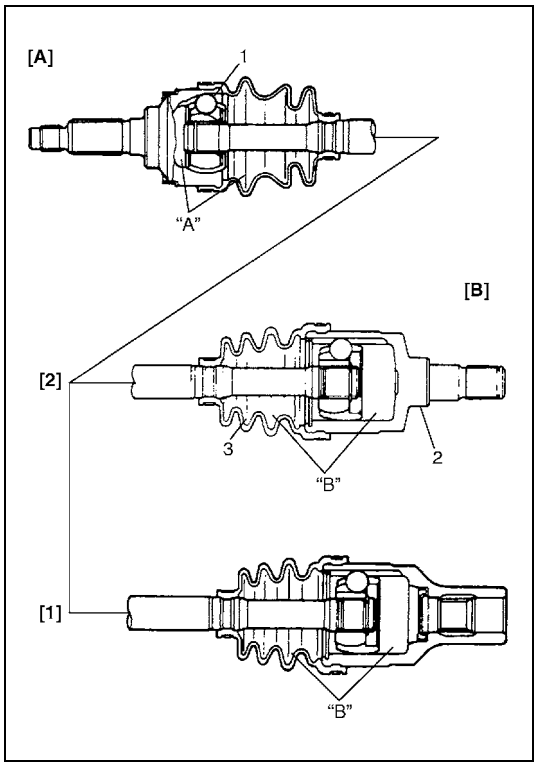

Judging from abnormality noted before disassembly and what is found though visual check of component parts after disassembly, prepare replacing parts and proceed to reassembly.
Make sure that wheel side joint assembly (1) and DOJ housing (2) are washed thoroughly and air dried, and boots (3) are cleaned with cloth if they are to be reused.

CAUTION:
To ensure full performance of joint as designed, be sure to distinguish between two types of grease in repair set and apply specified volume to respective joint.

[A] :	Wheel side
[B] :	Transaxle or transfer side
[1] :	Right side
[2] :	Left side

1) Wash disassembled parts (except boots). After washing, dry parts completely by blowing air.
2) Clean boots with cloth. Do not wash boots in degreaser, such as gasoline or kerosene, etc.
   Washing in degreaser causes deterioration of boot.
3) Apply grease in the supplied parts to wheel side joint.

Color : Black
Amount : 60 – 80 g (2.1 – 2.8 oz)

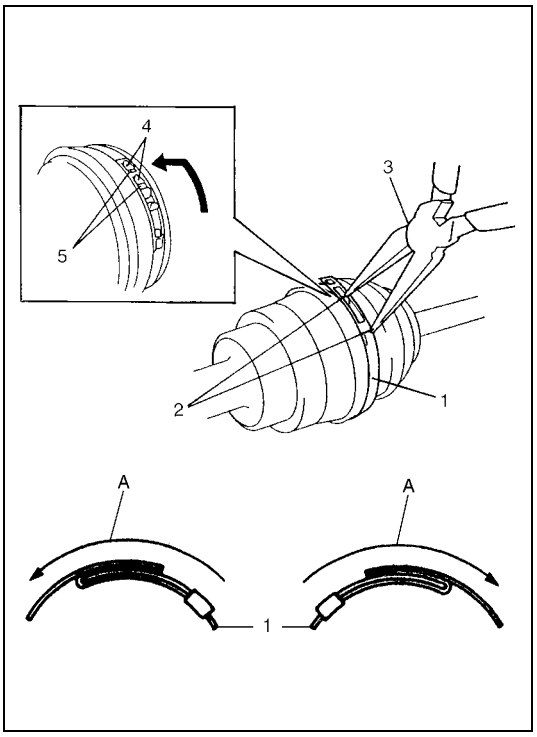

4) Install wheel side boot on shaft, fill up boot inside with grease and then fasten boot big band (1) by drawing hooks (2) with plier (3) and engage hooks (4) in slot and window (5).

CAUTION:
- **Bend each boot band against forward rotation (A).**
- **Do not squeeze or distort boot when fastening it with bands.**
  Distorted boot caused by squeezing air may reduce its durability.

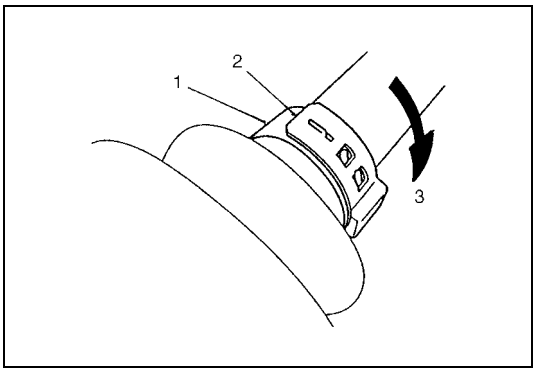

5) Place new wheel side small band (1) onto boot putting band outer end (2) against forward rotation (3) as shown in figure.

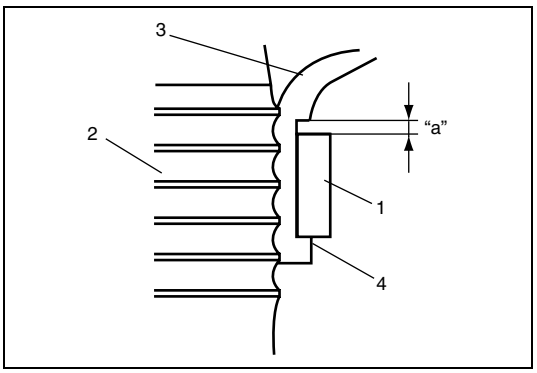

6) Install wheel side small band (1), putting its lower edge against projected end (4) of boot (3) so that clearance "a" is provided as shown in figure.

2. Shaft

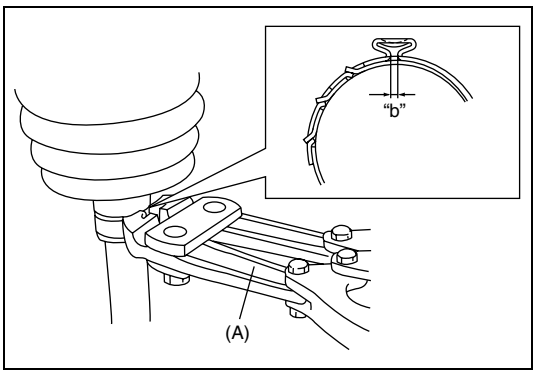

7) Fasten small band by using special tool.

NOTE:
- **Small band must not come out of its installation section.**
- **Be sure to caulk small band securely until complete contact "b" is obtained.**

Special tool
(A) : 09943-57010

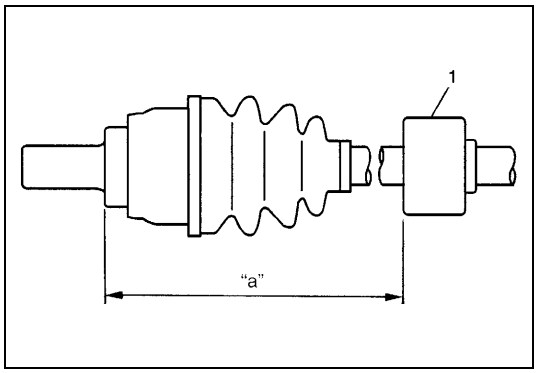

8) Install dynamic damper (1) on right side drive shaft according to dimension specified below.

Dynamic damper installing position
"a" : 174 – 180 mm (6.89 – 7.13 in.)

9) Set new differential side small band and differential side boot on shaft temporarily.

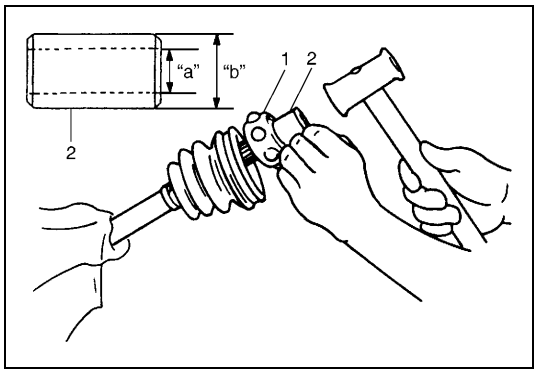

10) Driver in the cage (1) by using pipe (2).

Drive shaft joint cage installing pipe diameter
"a" : 25.0 mm (0.984 in.) or more
"b" : 33.0 mm (1.299 in.) or less

CAUTION:
Install cage directing smaller outside diameter side to wheel side.

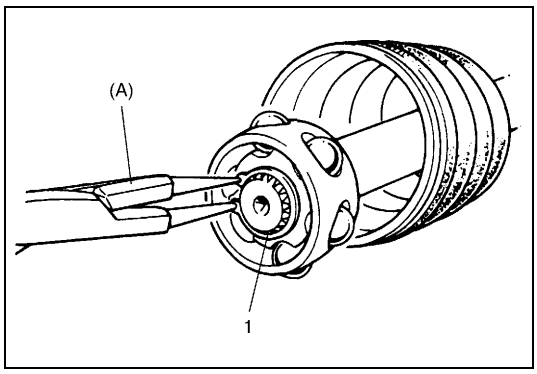

11) Install circlip (1) by using special tool.

Special tool
(A) : 09900-06107

12) Apply grease to entire surface of cage.
Use specified grease in tube included in spare parts.

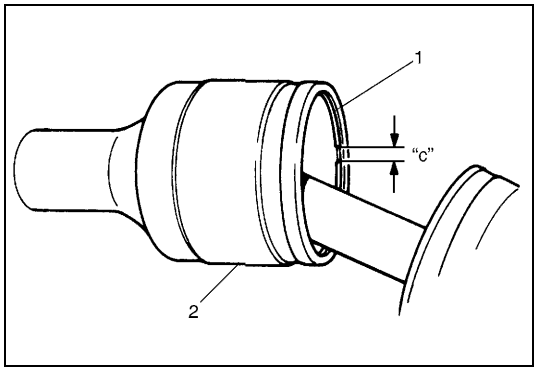

13) Insert cage into joint housing and fit snap ring (1) into groove of joint housing (2).

CAUTION:
Position opening of snap ring "c" so that it will not be lined up with a ball.

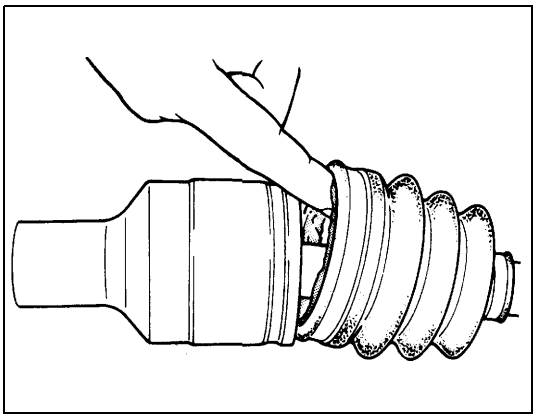

14) Apply grease to inside of joint housing, and fit boot to joint housing. After fitting boot, insert screwdriver into boot on joint housing side and allow air to enter boot so that air pressure in boot becomes the same as atmospheric pressure.

Color
For right side shaft : Black and grey
For left side shaft : Black and grey

Amount
For right side shaft : 75 – 95 g (2.7 – 3.4 oz)
For left side shaft : 70 – 90 g (2.5 – 3.2 oz)

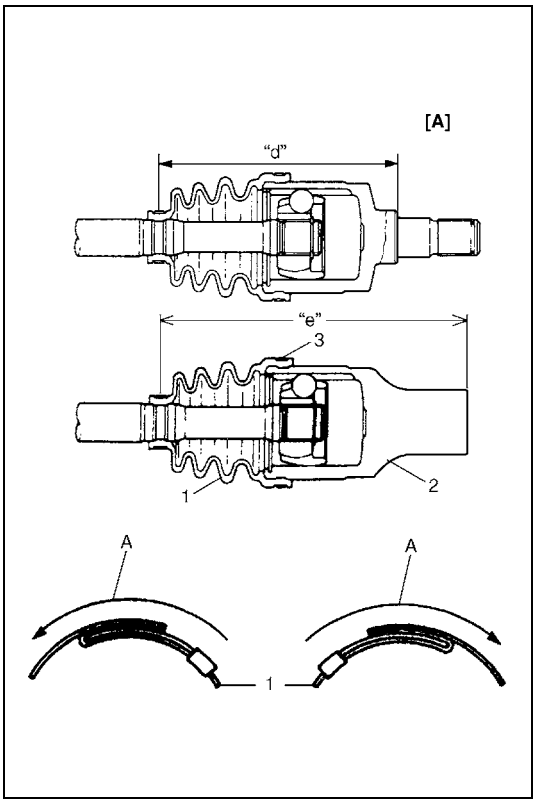

15) When fixing boot (1) to joint housing (2) with differential side big band (3), adjust so that measurements become as indicated below. For fixing boot band, refer to steps 4) to 7).

Drive shaft boot fixing position
"d" : 154.5 mm/6.09 in. for left side drive shaft
"e" : 192.8 mm/7.60 in. for right side drive shaft

CAUTION:
To prevent any problem caused by washing solution, do not wash joint boots. Degreasing of those parts with cloth is allowed.

CAUTION:
- **Bend each boot band against forward rotation (A).**
- **Do not squeeze or distort boot when fastening it with bands.**
  Distorted boot caused by squeezing air may reduce its durability.

[A] : Differential side

Front Drive Shaft Inspection

Inspection

- Check shaft and joint for damage, wear or bend.
  Replace them as necessary.
- Check retaining ring and snap ring for breakage or deformation.
  Replace as necessary.

Tightening Torque Specification

Fastening part	Tightening torque		
	N•m	kg-m	lb-ft
Transfer oil filler/level and drain plugs	21	2.1	15.5
Transmission oil filler/level and drain plugs	23	2.3	17.0
Ball stud bolt	60	6.0	43.5
Tie rod end nut	30 – 50	3.0 – 5.0	22.0 – 37.0
Drive shaft nut	175	17.5	127.0
Wheel bolt	95	9.5	69.0
Stabilizer mount bracket bolt	45	4.5	33.0
Center bearing support bolts	50	5.0	37.0

Required Service Material

Material	Recommended SUZUKI product (Part Number)	Use
Sealant	SUZUKI BOND NO. 1215 (99000-31110)	• Oil drain and filler/level plugs for manual transmission

Special Tools

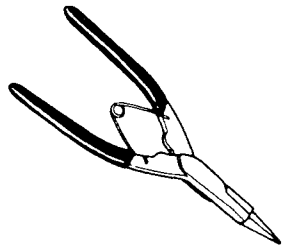	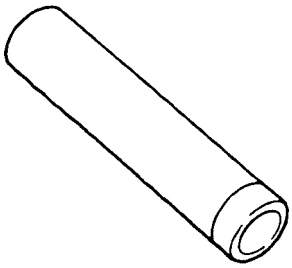	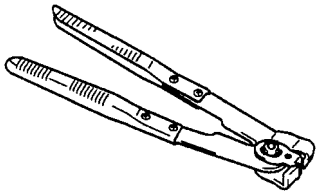	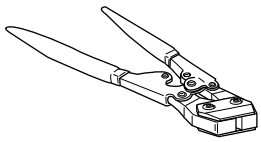
09900-06107 Snap ring pliers (Open type)	09925-98221 Bearing installer	09943-55010 (J-22610) Boot clamp plier	09943-57010 Band compressor

SECTION 4B

PROPELLER SHAFTS

CONTENTS

General Description 4B-1
Propeller Shaft Description 4B-1
Diagnosis 4B-1
Propeller Shaft Symptom Diagnosis 4B-1
Propeller shaft joint check 4B-2
On-Vehicle Service 4B-2
Propeller Shaft Component 4B-2
On-Vehicle Inspection 4B-2
Propeller Shaft Removal and Installation 4B-3
Propeller Shaft Inspection 4B-6
Tightening Torque Specification 4B-6
Required Service Material 4B-6

General Description

Propeller Shaft Description

Most universal and constant velocity joints require no maintenance. They are lubricated for life and can not be lubricated on the vehicle. If universal and constant velocity joints becomes noisy or worn, it must be replaced.
The propeller shaft is a balanced unit. Handle it carefully so that balance can be maintained.
A viscous coupling is used for the coupling system which distributes an optimum driving force to the front and rear wheels according to the driving conditions. It is located at the center of the propeller shaft.

Diagnosis

Propeller Shaft Symptom Diagnosis

Condition	Possible Cause	Correction
Abnormal noise	• Loose universal joint bolt	Tighten universal joint bolt.
	• Spider bearing worn out or stuck	Replace.
	• Worn or broken constant velocity joint	Replace.
	• Worn or broken center support bearing	Replace.
	• Broken center support rubber	Replace.
	• Wear spider	Replace propeller shaft.
Vibration	• Performed propeller shaft	Replace.

Propeller shaft joint check

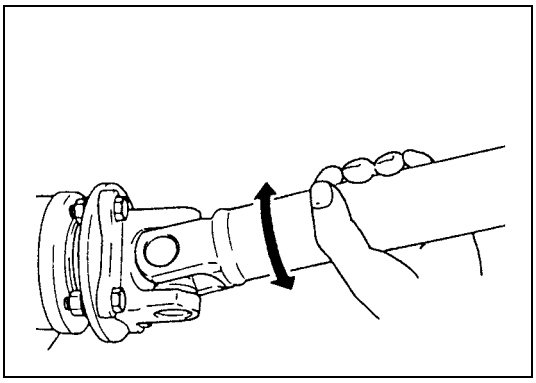

If universal joints are suspected of producing chattering or rattling noise, inspect them for wear. Check if cross spider rattles in yokes and replace defective propeller shaft with new one.
Noise coming from universal joint can be easily distinguished from other noises because rhythm of chattering or rattling is in step with cruising speed. Noise is pronounced particularly on standing start or in coasting condition (when braking effect of engine is showing in the drive line).

On-Vehicle Service

Propeller Shaft Component

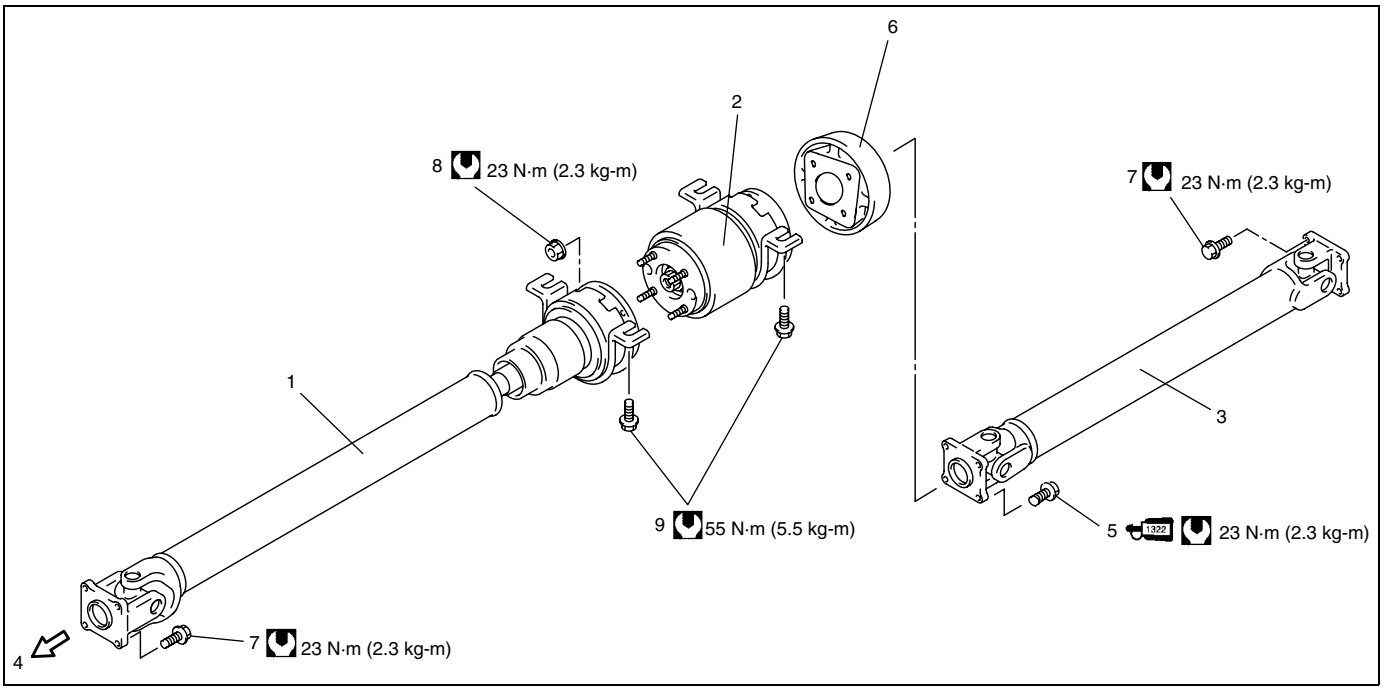

1. Propeller shaft No.1 with center support	5. Propeller shaft No.2 bolt : Apply thread lock 99000-32110 to thread.	9. Center support bolt
2. Viscous coupling with center support	6. Dynamic damper	Tightening torque
3. Propeller shaft No.2	7. Propeller shaft bolt	
4. Forward	8. Viscous coupling nut	

On-Vehicle Inspection

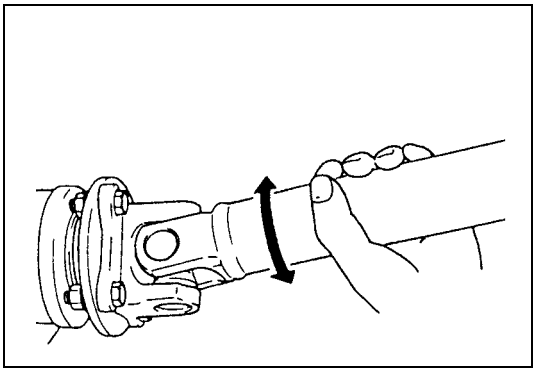

- Check propeller shaft connecting bolts for looseness. If looseness is found, tighten to specified torque.
- Check propeller shaft joints for wear, rattle and damage. If any defect is found, replace.
- Check propeller shaft center support for biting of foreign matter, crack, abnormal noise and damage. If any defect is found, replace.

Propeller Shaft Removal and Installation

Removal

1) Hoist vehicle.

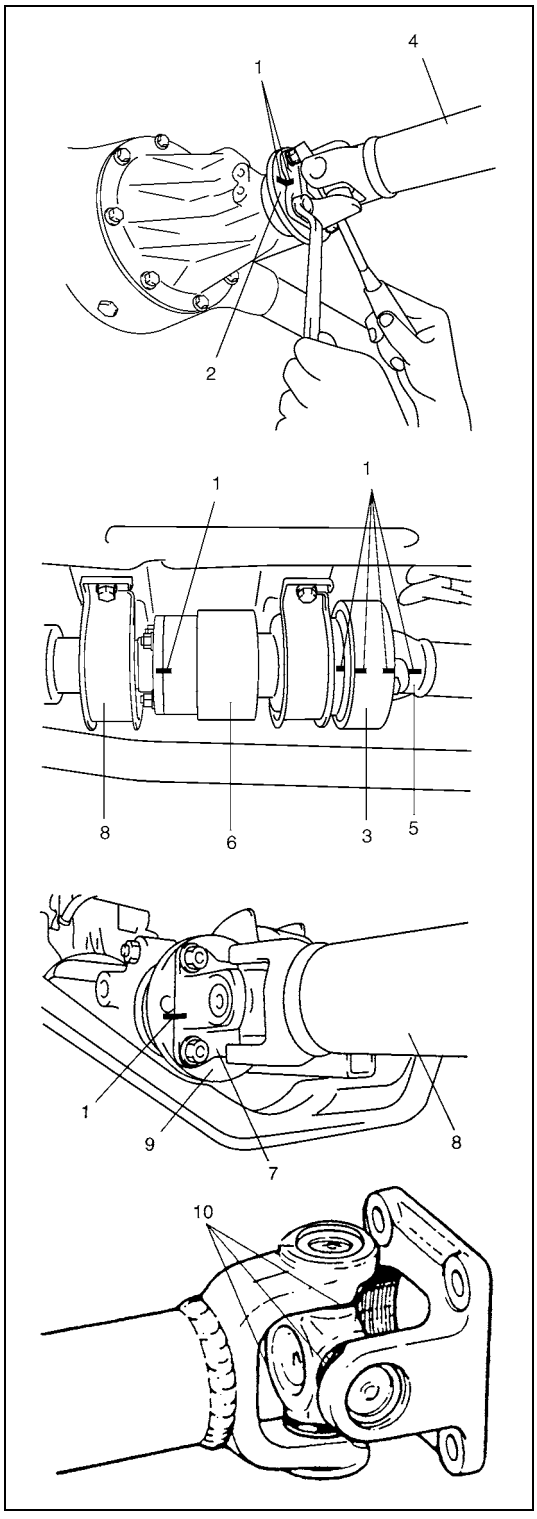

2) Before removing propeller shafts, give match marks (1) on propeller shaft No.2 (4) and companion flange (2) of rear differential as shown. Also give match marks (1) on propeller shaft No.2 yoke (5), dynamic damper (3), viscous coupling with center support (6), yoke (7) of propeller shaft No.1 with center support (8) and transfer output flange (9).

CAUTION:

Don't damage joint seal (10) to prevent lubrication defect of joint.

3) Loosen propeller shaft bolts at front and rear end, and separate propeller shafts from transfer and rear differential.

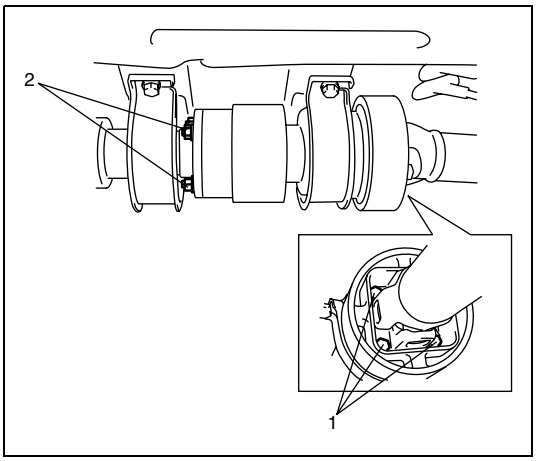

4) If disassembling propeller shaft assembly is necessary, loosen propeller shaft No.2 bolts (1) and viscous coupling nuts (2) to facilitate subsequent disassembling, but keeping each connection provisionally.

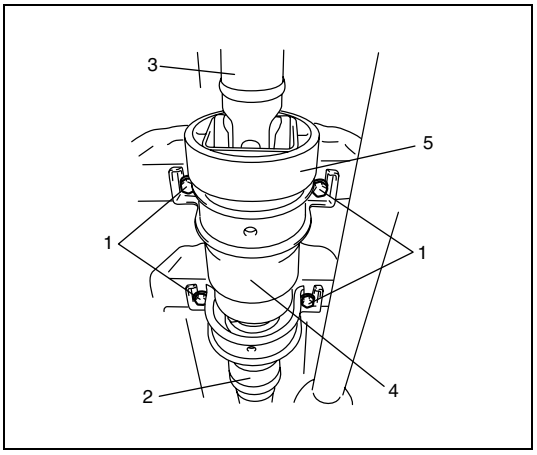

5) Loosen center support bolts (1), then remove propeller shaft No.1 with center support (2), propeller shaft No.2 (3), dynamic damper (5) and viscous coupling with center support (4) all together.

6) Disconnect propeller shaft No.1 with center support and propeller shaft No.2 from viscous coupling with center support.

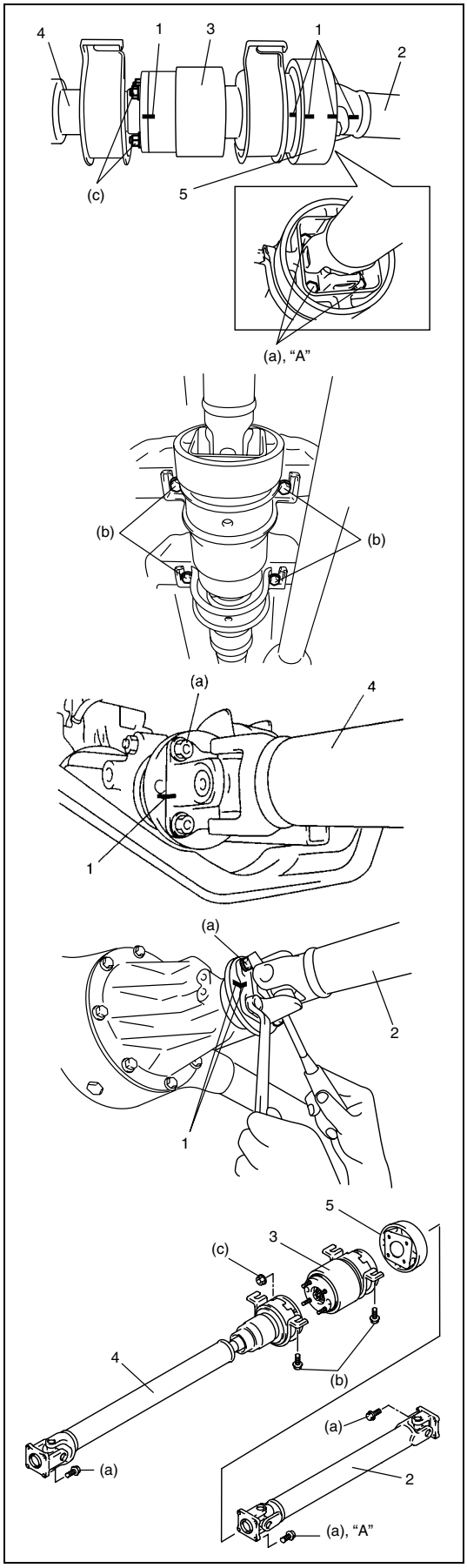

Installation

Reverse removal procedure to install propeller shafts noting the following points.

- When installing propeller shafts, dynamic damper and viscous coupling with center support, align the match marks (1). Otherwise, vibration may occur during driving.
- Apply thread lock cement to thread of propeller shaft No.2 bolts.

"A" : Cement 99000-32110

- Use following specification to torque bolts.

Tightening torque
Propeller shaft bolts (a) : 23 N·m (2.3 kg-m, 17.0 lb-ft)
Center support bolts (b) : 55 N·m (5.5 kg-m, 40.0 lb-ft)
Viscous coupling nuts (c) : 23 N·m (2.3 kg-m, 17.0 lb-ft)

2.	Propeller shaft No.2
3.	Viscous coupling with center support
4.	Propeller shaft No.1 with center support
5.	Dynamic damper

Propeller Shaft Inspection

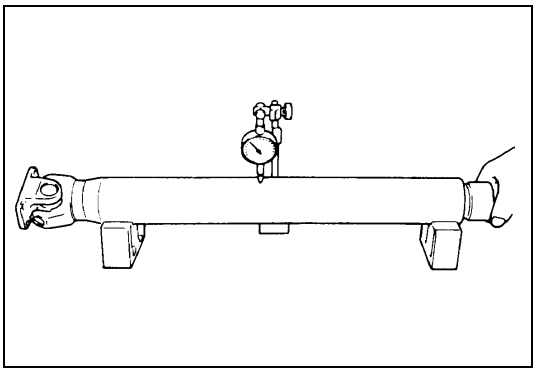

- Inspect propeller shaft and flange yoke for damage.
- Inspect propeller shaft for runout.
  If damage is found or shaft runout exceeds its limit, replace.

Propeller shaft runout
Limit : 0.7 mm (0.028 in.)

Tightening Torque Specification

Fastening portion	Tightening torque		
	N•m	kg-m	lb-ft
Propeller shaft bolts	23	2.3	17.0
Propeller shaft No.2 bolt	23	2.3	17.0
Center support bolt	55	5.5	40.0
Viscous coupling nut	23	2.3	17.0

Required Service Material

Material	Recommended SUZUKI Material (Part Number)	Use
Thread lock cement	THREAD LOCK CEMENT 1322 (99000-32110)	• Propeller shaft No.2 bolt

SECTION 5

BRAKES

WARNING:

For vehicles equipped with Supplemental Restraint (Air Bag) System:

- **Service on and around the air bag system components or wiring must be performed only by an authorized SUZUKI dealer. Refer to "System Components and Wiring Location View" under "General Description" in air bag system section in order to confirm whether you are performing service on or near the air bag system components or wiring. Please observe all WARNINGS and "Service Precautions" under "On-Vehicle Service" in air bag system section before performing service on or around the air bag system components or wiring. Failure to follow WARNINGS could result in unintentional activation of the system or could render the system inoperative. Either of these two conditions may result in severe injury.**
- **Technical service work must be started at least 90 seconds after the ignition switch is turned to the "LOCK" position and the negative cable is disconnected from the battery. Otherwise, the system may be activated by reserve energy in the Sensing and Diagnostic Module (SDM).**

NOTE:

- **When inspecting and servicing vehicle equipped with ABS, be sure to refer to SECTION 5E first.**
- **All brake fasteners are important attaching parts in that they could affect the performance of vital parts and systems, and/or could result in major repair expense. They must be replaced with one of same part number or with an equivalent part if replacement becomes necessary. Do not use a replacement part of lesser quality or substitute design. Torque values must be used as specified during reassembly to assure proper retention of all parts. There is to be no welding as it may result in extensive damage and weakening of the metal.**

CONTENTS

General Description 5-2
Diagnosis 5-3
Road Testing Brakes 5-3
Brake Fluid Leaks 5-3
Substandard or Contaminated Brake Fluid 5-3
Diagnosis Table 5-4
Check and Adjustment 5-7
Air Bleeding of Brake System 5-7
Brake Pedal Free Height Check 5-9
Brake (Stop) Light Switch Check 5-9
Excessive Pedal Travel Check 5-10
Brake Pedal Play Check 5-10
Brake Fluid Level Check 5-11
Brake Hose and Pipe Check 5-11
Master Cylinder Check 5-12
Brake Disc Check 5-12
Brake Pad Check 5-12
Brake Shoe Check 5-13
Parking Brake Inspection and Adjustment 5-13
Flushing Brake Hydraulic System 5-14
Brake Fluid Pressure Test (if equipped with LSPV) 5-14
Booster Operation Check 5-16
Check air tightness 5-16
Check operation 5-17
Check air tightness under load 5-17
Tightening Torque Specifications 5-18
Required Service Material 5-18
Special Tool 5-18

General Description

When the foot brake pedal is depressed, hydraulic pressure is developed in the master cylinder to actuate pistons (two in front and four in rear).
The master cylinder is a tandem master cylinder. Brake pipes are connected to the master cylinder and they make two independent circuits. One connects front right & rear left brakes and the other connects front left & rear right brakes.
The load sensing proportioning valve (LSPV) is included in these circuits between the master cylinder and the rear brake for the vehicle without ABS.
In this brake system, the disc brake type is used for the front wheel brake and a drum brake type (leading / trailing shoes) for the rear brake.
The parking brake system is mechanical. It applies brake force to only rear wheels by means of the cable and mechanical linkage system. The same brake shoes are used for both parking and foot brakes.

NOTE:

The figures shows left-hand steering vehicle.
The figure for right-hand steering vehicle should be symmetrical.

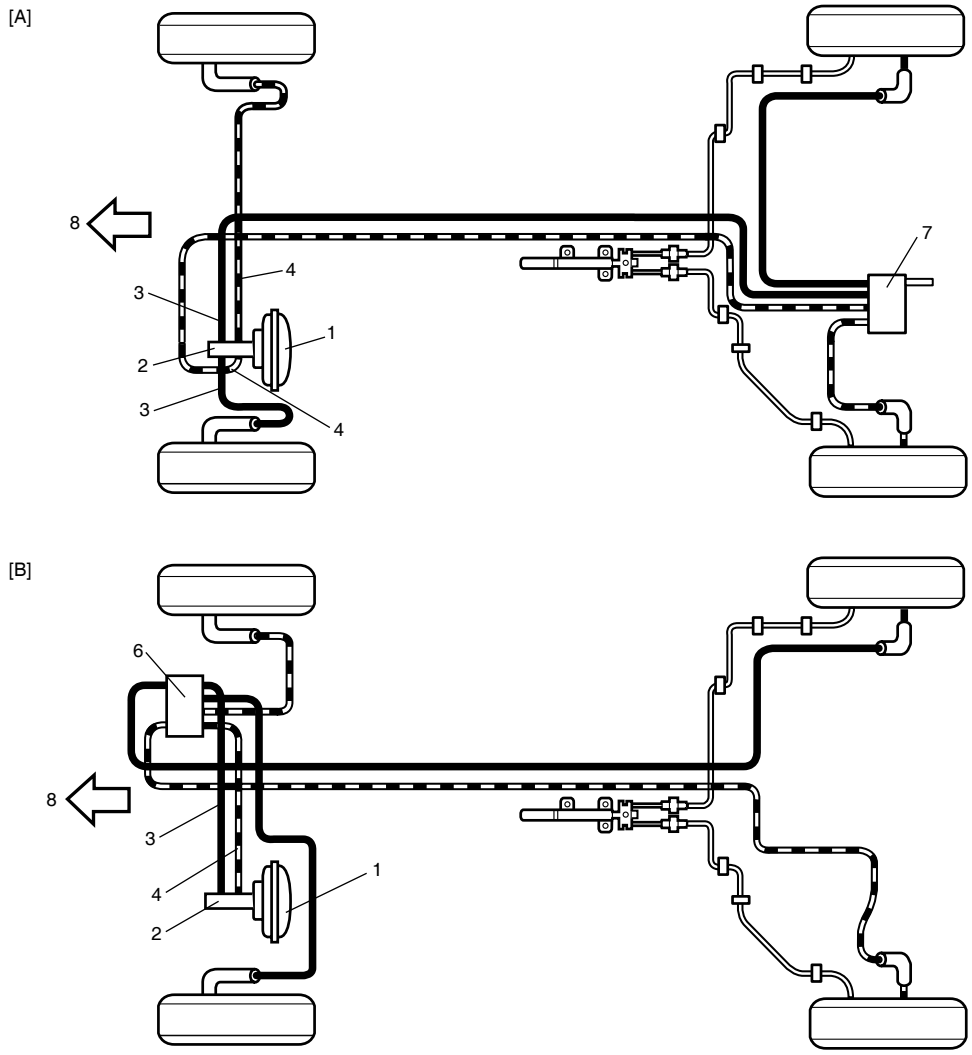

[A]: For vehicle without ABS	3. Secondary side	7. LSPV (Load Sensing Proportioning Valve)
[B]: For vehicle with ABS	4. Primary side	8. Forward
1. Brake booster	5. Blank	
2. Master cylinder	6. ABS hydraulic unit / control module assembly	

Diagnosis

Road Testing Brakes

Brakes should be tested on dry, clean, smooth and reasonably level roadway which is not crowned. Road test brakes by making brake applications with both light and heavy pedal forces at various speeds to determine if the vehicle stops evenly and effectively.

Also drive vehicle to see if it leads to one side or the other without brake application. If it does, check the tire pressure, front wheel alignment and front suspension attachments for looseness. See diagnosis table for other causes.

Brake Fluid Leaks

Check the master cylinder fluid levels. While a slight drop in reservoir level does result from normal lining wear, an abnormally low level indicates a leak in the system. In such a case, check the entire brake system for leakage. If even a slight evidence of leakage is noted, the cause should be corrected or defective parts should be replaced.

If fluid level is lower than the minimum level of reservoir, refilling is necessary. Fill reservoir with specified brake fluid.

Brake fluid: Refer to reservoir tank cap.

CAUTION:

Since brake system of this vehicle is factory filled with brake fluid indicated on reservoir tank cap, do not use or mix different type of fluid when refilling; otherwise serious damage will occur.

Do not use old or used brake fluid, or any fluid from a unsealed container.

Substandard or Contaminated Brake Fluid

Improper brake fluid, mineral oil or water in the fluid may cause the brake fluid to boil or the rubber components in the hydraulic system to deteriorate.

If deterioration of rubber is evident, disassemble all hydraulic parts and wash with alcohol. Dry these parts with compressed air before assembly to keep alcohol out of the system. Replace all rubber parts in the system, including hoses. Also, when working on the brake mechanisms, check for fluid on the linings. If excessive fluid is found, replace the linings.

The system must be flushed if there is any doubt as to the grade of fluid in the system or if fluid has been used which contained parts that have been subjected to contaminated fluid.

Diagnosis Table

Condition	Possible Cause	Correction
Not enough braking force	Brake fluid leakage from brake lines	Locate leaking point and repair.
	Overheated brakes	Determine cause and repair.
	Poor contact of shoes on brake drum	Repair for proper contact.
	Brake shoes linings stained with oil or wet with water	Replace.
	Badly worn brake linings	Replace pads or shoes.
	Defective wheel cylinders	Repair or replace.
	Malfunctioning caliper assembly	Repair or replace.
	Air in system	Bleed system.
	Maladjusted sensor spring length of LSPV, if equipped	Check or adjust.
	Broken sensor spring of LSPV, if equipped	Replace.
	Defective LSPV, if equipped	Replace.
	Malfunctioning ABS (Antilock brake system), if equipped	Check system and replace as necessary.
Brake pull (Brakes not working in unison)	Pad linings and/or shoe linings are wet with water or stained with oil in some brakes	Replace.
	Drum-to-shoe clearance out of adjustment in some brakes (Malfunctioning auto adjusting mechanism)	Check for inoperative auto adjusting mechanism.
	Disc and/or drum is out of round in some brakes	Replace.
	Wheel tires are inflated unequally	Inflate equally.
	Malfunction in wheel cylinders	Repair or replace.
	Disturbed front wheel alignment	Adjust as prescribed.
	Unmatched tires on same axle	Tires with approximately the same amount of tread should be used on the same axle.
	Restricted brake pipes or hoses	Check for soft hoses and damaged lines. Replace with new hoses and new double-walled steel brake tubing.
	Malfunctioning caliper assembly	Check for stuck or sluggish pistons and proper lubrication of caliper slide bush. Caliper should slide.
	Loose suspension parts	Check all suspension mountings.
	Loose calipers	Check and torque bolts to specifications.
Noise (high pitched squeak without brake applied)	Front lining worn out	Replace linings.
	Contact wear indicator to brake disc	Replace pads.
Rear brake locked prematurely	Maladjusted sensor spring length of LSPV, if equipped	Check or adjust.
	Malfunction LSPV assembly, if equipped	Replace assembly.

Condition	Possible Cause	Correction
Excessive pedal travel (Pedal stroke too large)	Partial brake system failure	Check brake systems and repair as necessary.
	Insufficient fluid in master cylinder reservoirs	Fill reservoirs with approved brake fluid. Check for leaks and air in brake system. Check warning light. Bleed system if required.
	Air in system (soft / spongy pedal)	Bleed system.
	Rear brake system not adjusted (malfunctioning auto adjusting mechanism)	Repair auto adjusting mechanism. Adjust rear brakes.
	Bent brake shoes	Replace brake shoes.
	Worn rear brake shoes	Replace brake shoes.
Brake locked (For vehicle equipped with ABS)	Malfunctioning ABS	Check system referring to “ABS Diagnostic Flow Table” in Section 5E.
Dragging brakes (A very light drag is present in all brakes immediately after pedal is released)	Master cylinder pistons not returning correctly	Replace master cylinder.
	Restricted brake pipes or hoses	Check for soft hoses or damaged pipes and replace with new hoses and/or new double-walled steel brake piping.
	Incorrect parking brake adjustment on rear brakes	Check and adjust to correct specifications.
	Weakened or broken return springs in the brake	Replace.
	Sluggish parking brake cables or linkage	Repair or replace.
	Wheel cylinder or caliper piston sticking	Repair as necessary.
	Badly worn piston seal in caliper	Replace piston seal.
Pedal pulsation (Pedal pulsates when depressed for braking)	Damaged or loose wheel bearings	Replace wheel bearings.
	Distorted steering knuckle or rear axle shaft	Replace knuckle or rear axle shaft.
	Excessive disc lateral runout	Check per instructions. If not within specifications, replace or machine disc.
	Parallelism between pad and disc not within specifications	Check per instructions. If not within specifications, replace or machine disc.
	Rear drums out of round	Check runout. Repair or replace drum as necessary.
Braking noise	Glazed shoe linings or foreign matters stuck to linings	Repair or replace shoe linings.
	Worn or distorted shoe linings	Replace shoe lining (or pad).
	Loose front wheel bearings	Replace wheel bearing.
	Distorted backing plates or loose mounting bolts	Replace or retighten securing bolts.
	Contact wear indicator to brake disc	Replace pads.

Condition	Possible Cause	Correction
Brake warning lamp lights after engine start	Parking brake applied	Release parking brake and check that brake warning lamp turns off.
	Insufficient amount of brake fluid	Add brake fluid.
	Brake fluid leaking from brake line	Investigate leaky point, correct it and add brake fluid.
	Brake warning lamp circuit faulty	Repair circuit.
	Malfunctioning ABS system, if equipped with ABS.	Check system referring to “ABS Diagnostic Flow Table” in Section 5E.
Brake warning lamp turns on when brake is applied	Brake fluid leaking from brake line	Investigate leaky point, correct it and add brake fluid.
	Insufficient amount of brake fluid	Add brake fluid.
Brake warning lamp fails to turn on even when parking brake is applied	Brake warning lamp circuit faulty	Replace bulb or repair circuit.
ABS warning lamp turns on after engine start (If equipped)	Malfunctioning ABS	Check system referring to “ABS Diagnostic Flow Table” in Section 5E.
ABS warning lamp turns on when brake is applied (If equipped)	Brake fluid leaking from brake line	Investigate leaky point, correct it and add brake fluid.
	Insufficient amount of brake fluid	Add brake fluid.
	Malfunctioning ABS	Check system referring to “ABS Diagnostic Flow Table” in Section 5E.
ABS warning lamp does not turn on for 2 sec. after ignition switch has turned ON	Bulb burnt out	Replace bulb.
	Malfunctioning ABS	Check system referring to “ABS Diagnostic Flow Table” in Section 5E.

Check and Adjustment

Air Bleeding of Brake System

CAUTION:

Brake fluid is extremely damaging to paint. If fluid should accidentally touch painted surface, immediately wipe fluid from paint and clean painted surface.

NOTE:

For vehicle equipped with ABS, make sure that ignition switch is turned off.

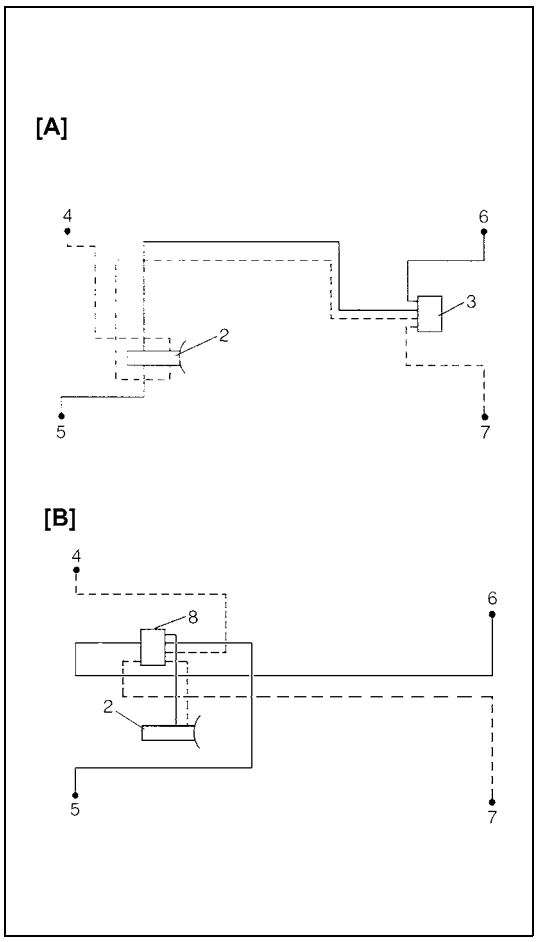

Bleeding operation is necessary to remove air whenever it entered hydraulic brake system.

Hydraulic lines of brake system are based on the diagonal split system. When a brake pipe or hose was disconnected at the wheel, bleeding operation must be performed at both ends of the line of the removed pipe or hose. When any joint part of the master cylinder or other joint part between the master cylinder and each brake (wheel) was removed, the hydraulic brake system must be bled at all 4 wheel brakes.

NOTE:

Perform bleeding operation starting with wheel cylinder farthest from master cylinder and then at front caliper of the same brake line. Do the same on the other brake line.

[A]:	Without ABS
[B]:	With ABS
1.	Blank
2.	Master cylinder
3.	LSPV
4.	Right brake caliper
5.	Left brake caliper
6.	Right wheel cylinder
7.	Left wheel cylinder
8.	ABS hydraulic unit
●:	Air bleeding point

1) Fill master cylinder reservoir with brake fluid and keep at least one-half full of fluid during bleeding operation.

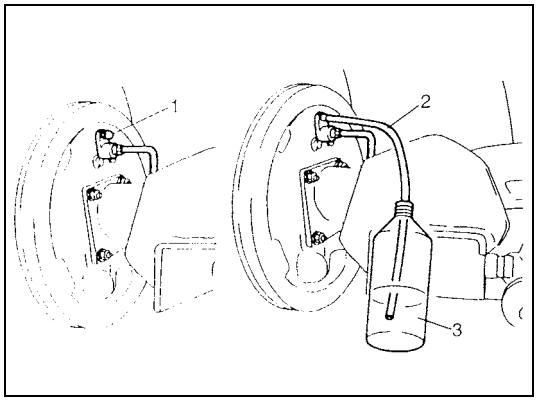

2) Remove bleeder plug cap (1).
   Attach a vinyl tube (2) to bleeder plug of wheel cylinder, and insert the other end into container (3).

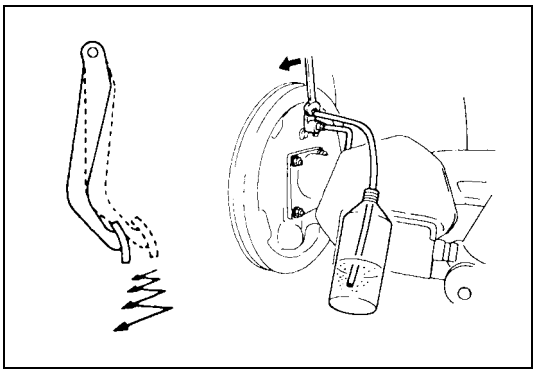

3) Depress brake pedal several times, and then while holding it depressed, loosen bleeder plug about one-third to one half turn.

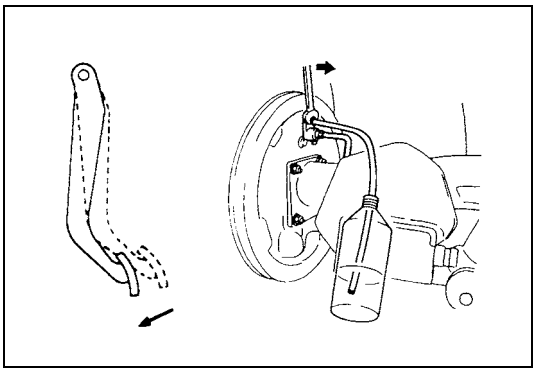

4) When fluid pressure in the cylinder is almost depleted, retighten bleeder plug.
5) Repeat this operation until there are no more air bubbles in hydraulic line.

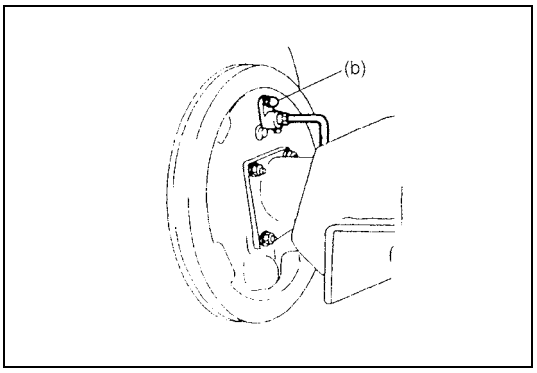

6) When bubbles stop, with depressing brake pedal, tighten bleeder plug.
Tightening torque
Bleeder plug
(b): 8.5 N·m (0.85 kg-m, 6.5 lb-ft) for rear brake
Bleeder plug
(b): 6.5 N·m (0.65 kg-m, 5.0 lb-ft) for front brake
7) Then attach bleeder plug cap.
8) After completing bleeding operation, apply fluid pressure to pipe line and check for leakage.

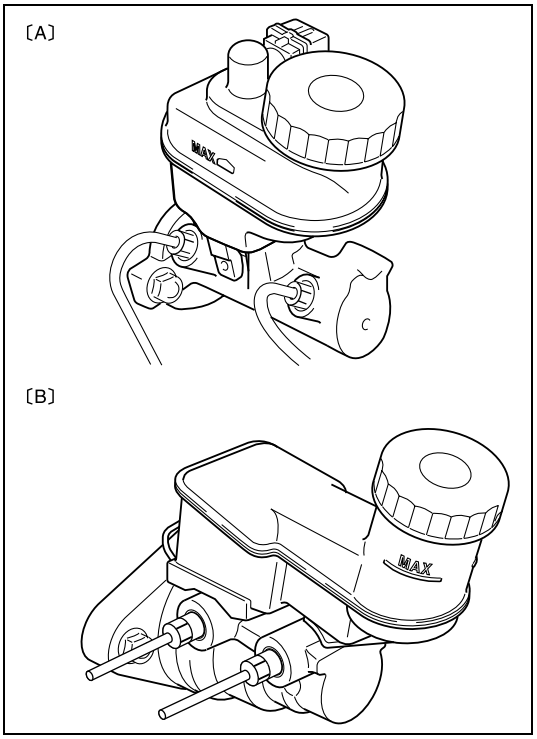

9) Replenish fluid into reservoir up to specified level.
10) Check brake pedal for “sponginess”. If found spongy, repeat entire procedure of bleeding.

[A]: Left-hand steering vehicle
[B]: Right-hand steering vehicle

Brake Pedal Free Height Check

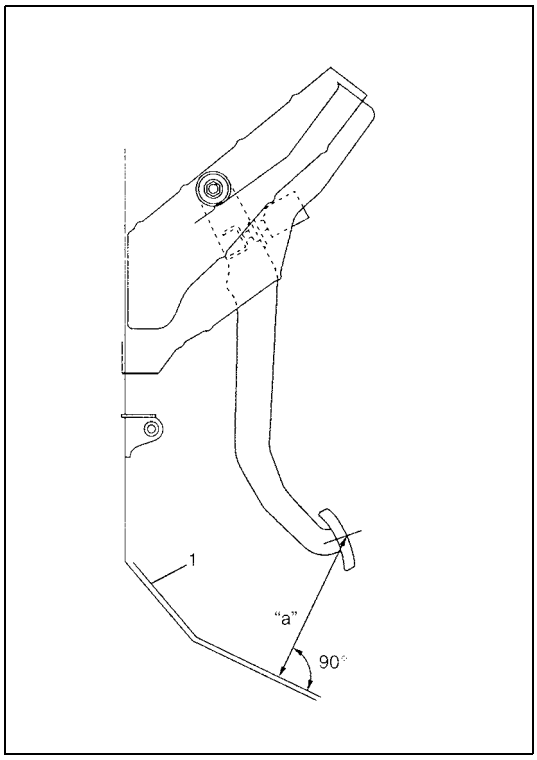

Peel off carpet and check brake pedal for free height.
If it is not within specification, check and adjust the following items.

Brake pedal free height
"a" from silencer (1): 152 – 162 mm (6.0 – 6.4 in.)

- Check brake pedal for dent.
- Check that brake booster is installed securely.
- Check stop light switch position referring to "Brake (Stop) Light Switch Check" below.
- Check measurement between booster mounting surface and center of clevis pin hole referring to "Brake Booster Inspection (for LH Model)" or "Brake Booster Inspection and Adjustment (for RH Model)" in Section 5A.

Brake (Stop) Light Switch Check

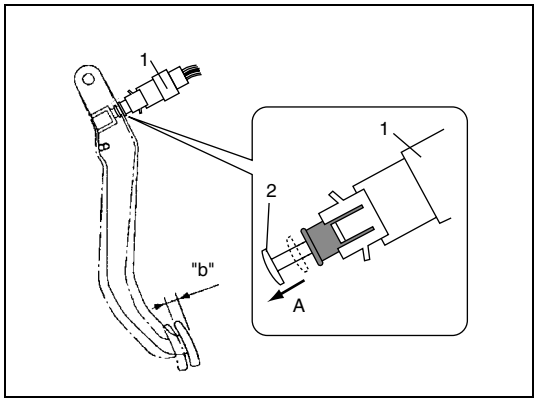

1) Check that stop light lights when brake pedal is depressed the specified distance.
   If the measured value is below the specified value, pull switch slider (2) of brake light switch (1) in the direction of arrow (A) in the figure to measure the distance again. Though the measured value is below or above the specified value, check the following and replace if found defective.

   Distance "b": 3.5 – 14 mm (0.14 – 0.55 in.)

   a) Check brake light switch referring to "Brake Light Switch Inspection" in Section 8A.
   b) Check brake pedal for dent.
   c) Check brake booster for installation.
   d) Check brake booster distance between booster installation surface and the center of clevis pin hole to standard value referring to "Brake Booster Inspection (for LH Model)" or "Brake Booster Inspection and Adjustment (for RH Model)" in Section 5A.
2) Check that stop light is turned off when brake pedal released.

Excessive Pedal Travel Check

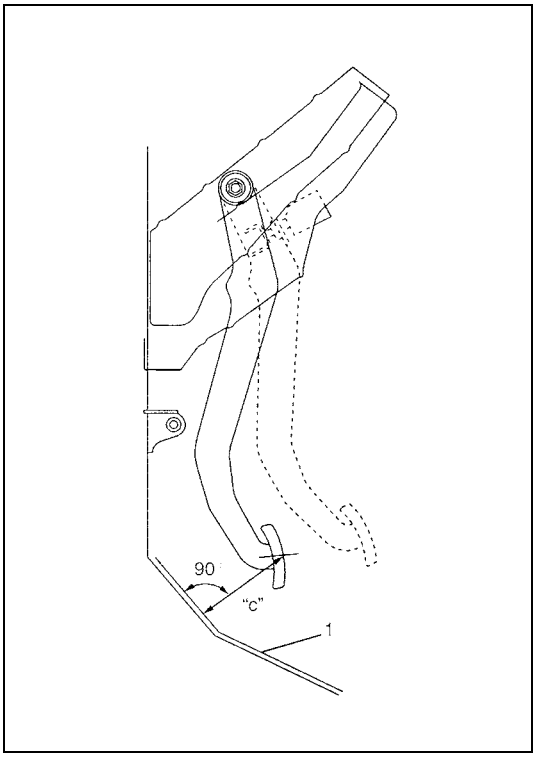

1) Peel off carpet and start engine.
2) Depress brake pedal a few times.
3) With brake pedal depressed with approximately 300 N (30kg, 66 lbs) load, measure pedal to silencer (1) clearance "c".
4) If clearance "c" is less than specification, the most possible cause is either rear brake shoes are worn out beyond limit or air is in lines.
   Should clearance "c" is remained less than specification even after replacement of brake shoes and bleeding of system, other possible but infrequent cause is malfunction of rear brake shoe adjusters or booster push rod length out of adjustment.
   – Bleed brake system. Refer to "Air Bleeding of Brake System" in this section.
   – Remove brake drums for adjuster inspection. (Refer to "Brake Drum Removal and Installation (for 2WD Model)" in Section 5C.) If defective, correct or replace.

Clearance between brake pedal and dash panel silencer
"c": Over 115 mm (4.53 in.)··· Left-hand steering vehicle
"c": Over 88 mm (3.46 in.)··· Right-hand steering vehicle

Brake Pedal Play Check

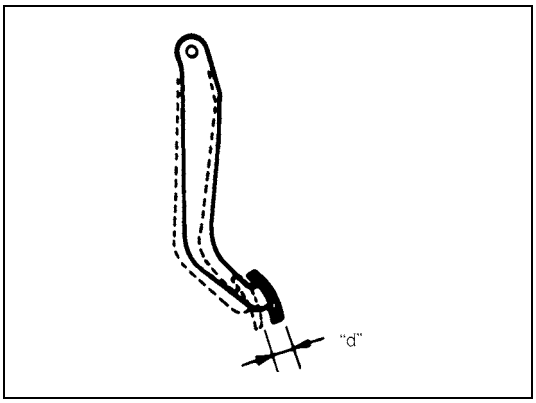

Pedal play should be within specification. If out of specification, check brake light switch for proper installation position and adjust if necessary.
Also check pedal shaft bolt and master cylinder pin installation for looseness and replace if defective.

Pedal play
"d": 1 – 8 mm (0.04 – 0.32 in.)

Brake Fluid Level Check

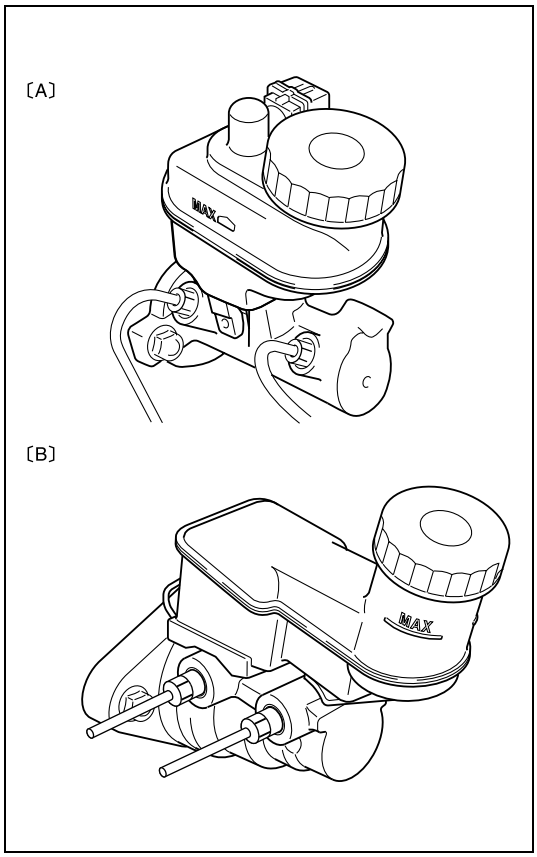

Be sure to use particular brake fluid either as indicated on reservoir cap of that vehicle or recommended in owner's manual which comes along with that vehicle.
Use of any other fluid is strictly prohibited.
Fluid level should be between MIN and MAX lines marked on reservoir.
When warning light lights sometimes during driving, replenish fluid to MAX line.
When fluid decreases quickly, inspect brake system for leakage. Correct leaky points and then refill to specified level.

CAUTION:

Do not use shock absorber fluid or any other fluid which contains mineral oil. Do not use a container which has been used for mineral oil or a container which is wet from water.
Mineral oil will cause swelling and distortion of rubber parts in hydraulic brake system and water mixed into brake fluid will lower fluid boiling point. Keep all fluid containers capped to prevent contamination.

[A]: Left-hand steering vehicle
[B]: Right-hand steering vehicle

Brake Hose and Pipe Check

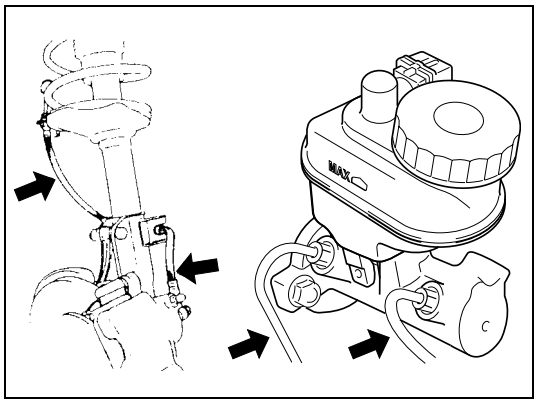

The brake hose assembly should be checked for road hazard damage, for cracks and chafing of the outer cover, for leaks and blisters.
A light and mirror may be needed for an adequate inspection. If any of the above conditions are observed on the brake hose, it is necessary to replace it.
Inspect the pipe for damage, cracks, dents and corrosion. If any defect is found, replace it.

Master Cylinder Check

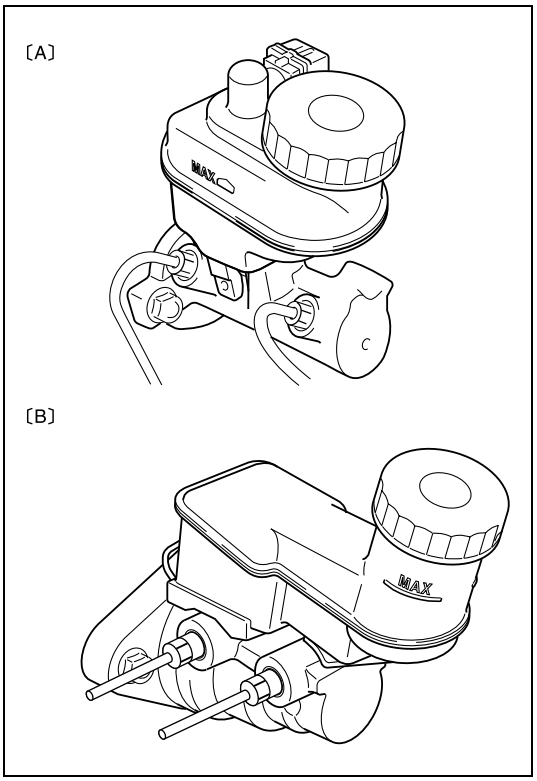

Check master cylinder and reservoir tank for crack, damage and brake fluid leakage. If any faulty condition exists, correct or replace.

[A]: Left-hand steering vehicle
[B]: Right-hand steering vehicle

Brake Disc Check

Refer to item “Front Disc Brake Pad Inspection” of Section 5B for inspection point and procedure.

Brake Pad Check

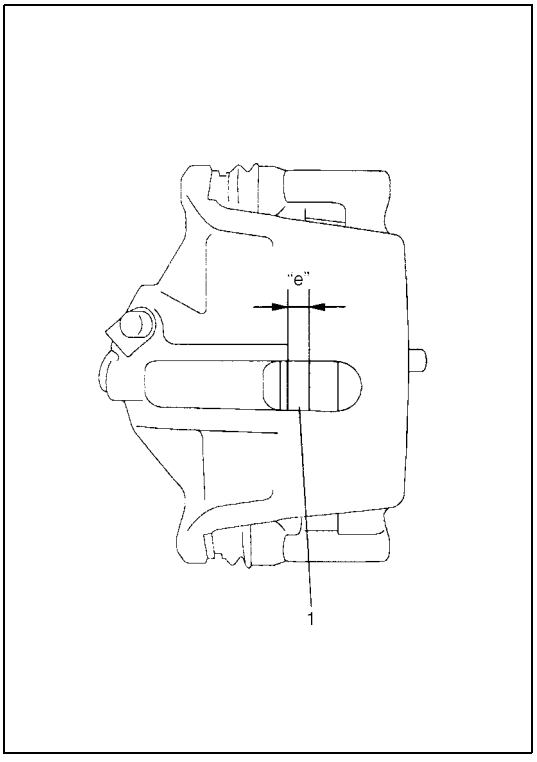

Inspect pad linings periodically according to maintenance schedule whenever wheels are removed (for tire rotation or other reason).
Take a look through hole of caliper and check lining (1) thickness of each pad.
If one of brake pad is worn to service limit, all linings must be replaced at the same time.

Thickness “e”
Service limit: 2.0 mm (0.08 in.)

Brake Shoe Check

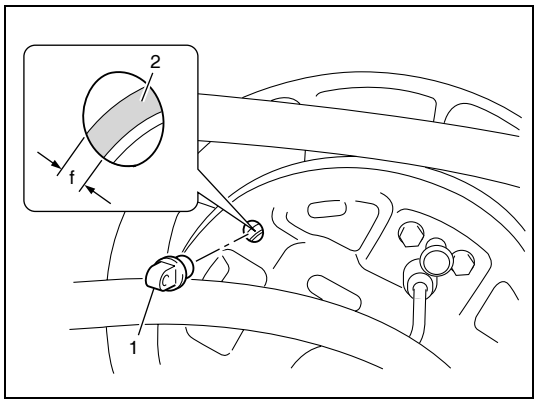

Inspection should be carried out on the following points after brake pedal travel “c” (pedal to silencer clearance) check as described on previous page of this section, even when it is more than specification.

Amount of brake shoe wear can be checked as follows.

1) Hoist vehicle.
2) Remove rubber cover (plug) (1) from brake back plate.
3) Through hole of back plate, visually check for thickness of brake shoe lining (2). If lining thickness “f” is less than specified wear limit, replace all brake shoes with new ones.

Thickness “f”
Service limit: 1.0 mm (0.04 in.)

Parking Brake Inspection and Adjustment

INSPECTION

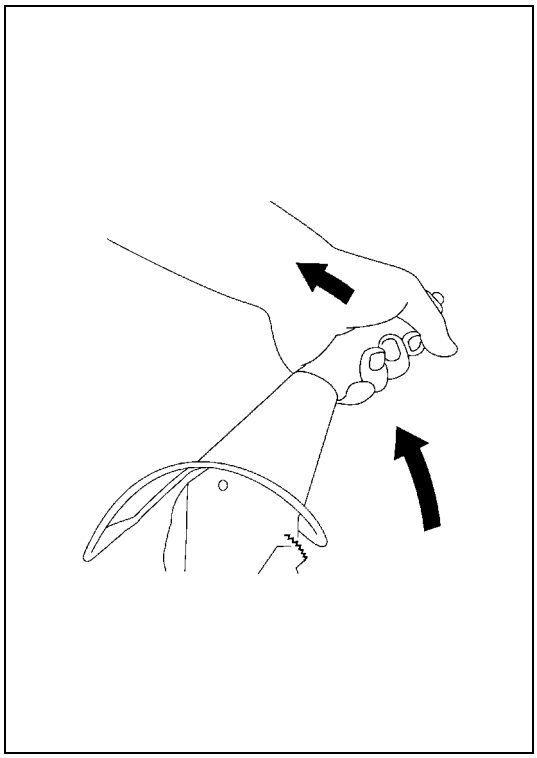

Hold center of parking brake lever grip and pull it up with 200 N (20 kg, 44 lbs) force.

With parking brake lever pulled up as shown, count ratchet notches. There should be 4 to 9 notches.

Also, check if both right and left rear wheels are locked firmly.

To count number of notches easily, listen to click sounds that ratchet makes while pulling parking brake lever without pressing its button.

One click sound corresponds to one notch.

If number of notches is out of specification, adjust cable referring to adjustment procedure so as to obtain specified parking brake stroke.

NOTE:

Check tooth tip of each notch for damage or wear. If any damage or wear is found, replace parking brake lever.

ADJUSTMENT

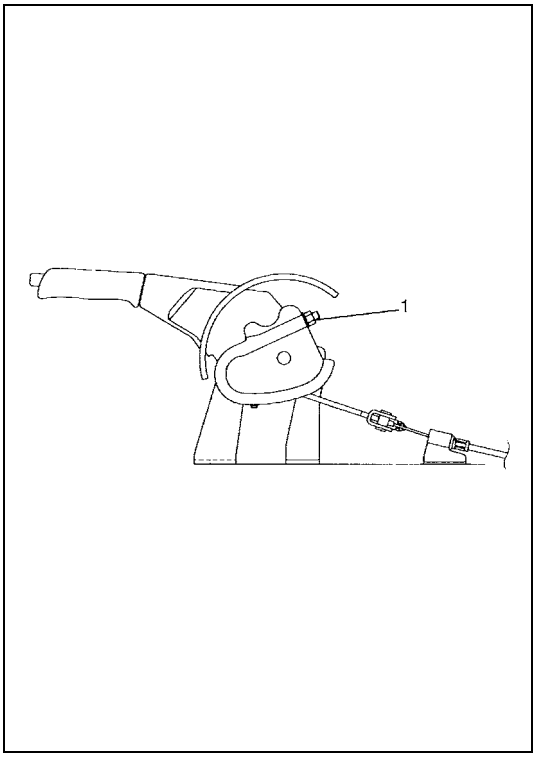

NOTE:

Make sure for the following conditions before cable adjustment.

- **No air is trapped in brake system.**
- **Brake pedal travel is proper.**
- **Brake pedal is depressed repeatedly with about 300 N (30 kg, 66 lbs) load until adjuster actuator clicking sound can not be heard from drum brake.**
- **Parking brake lever is pulled up a few times with about 200 N (20 kg, 44 lbs) force.**
  If parking brake cable is replaced with new one, pull up parking brake lever a few times with about 500 N (50 kg, 110 lbs) force.
- **Rear brake shoes are not worn beyond limit, and self adjusting mechanism operates properly.**
- **If parking brake lever stroke is less than specification, loosen adjusting nut (1) as far as end of bolt. Then depress brake pedal repeatedly with about 300 N (30 kg, 66 lbs) load until adjuster actuator clicking sound can not be heard from drum brake.**

After confirming that above conditions are all satisfied, adjust parking brake lever stroke by loosening or tightening adjust nut.

CAUTION:
Check brake drum for dragging after adjustment.

Parking brake stroke
(When lever is pulled up at 200 N (20 kg, 44 lbs).):
4 to 9 notches

Flushing Brake Hydraulic System

It is recommended that entire hydraulic system be thoroughly flushed with clean brake fluid whenever new parts are installed in hydraulic system.
Periodical change of brake fluid is also recommended.

Brake Fluid Pressure Test (if equipped with LSPV)

Test procedure for LSPV assembly is as follows.
Before testing, confirm the following.

- Fuel tank is filled with fuel fully.
- Vehicle is equipped with spare tire, tools, jack and jack handle.

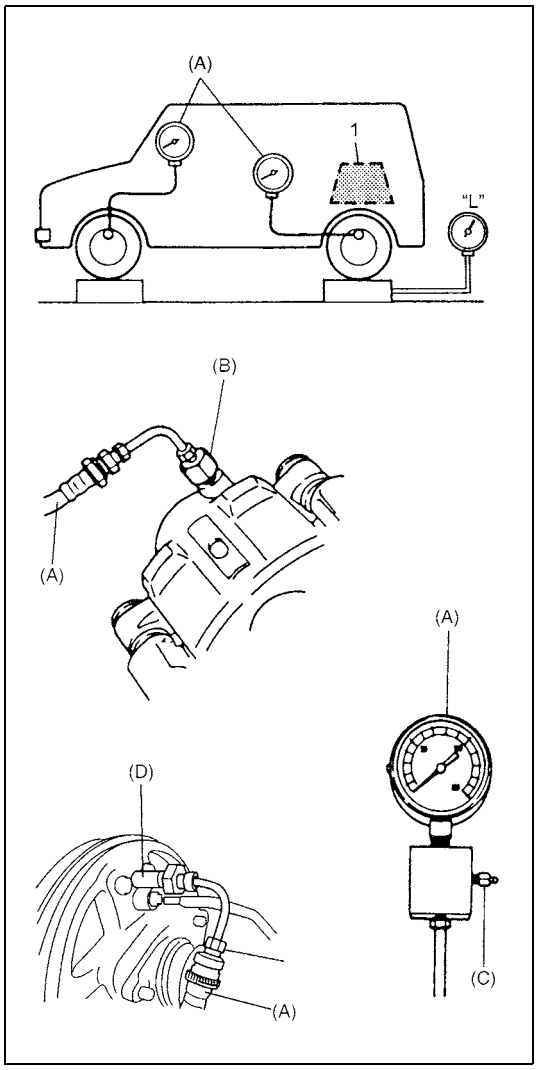

1) Place vehicle on level floor and set approximately about 1,000 N (100 kg, 220 lbs) weight (1) on rear housing so that rear axle weighs 4,500 N (450 kg, 992 lbs).

Rear axle weight
"L": 4,500 N (450 kg, 992 lbs)

2) Install special tool to front and rear brake.

NOTE:

Pressure gauge should be connected to bleeder plug hole of front (left side brake) and rear (right side brake). After testing front left side and rear right side, test front right side and rear left side in the same way.

NOTE:

For front brake, use special tool (B) instead of thread diameter 10 mm attachment included in special tool (A).

Special tool
(A): 09956-02311
(B): 09952-36311 (Front wheel brake)
(C): 55473-82030 (Air bleeder plug as a spare part)
(D): 09952-48320 (Rear wheel brake)

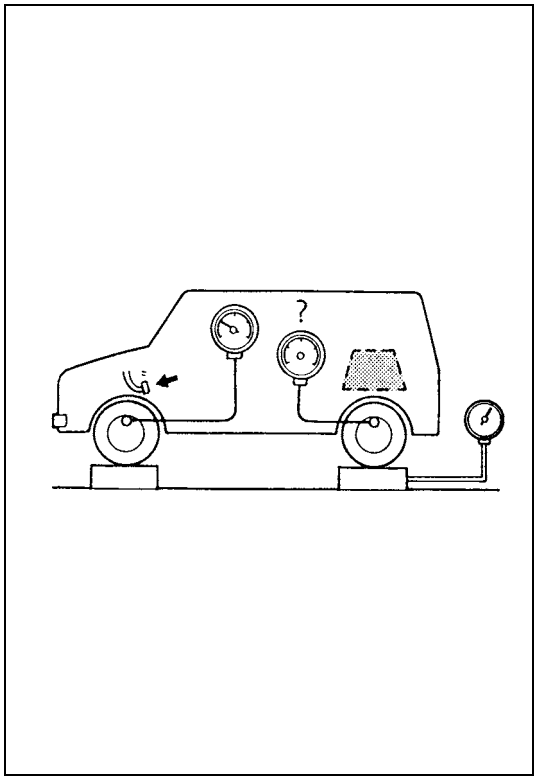

3) Depress brake pedal gradually till fluid pressure of front brake becomes as specified below and check corresponding pressure of rear brake then. It should be within specification given below.

Rear brake pressure with applied by 75 kg/cm^2 on front brake

Front brake	Rear brake
7,500 kPa (75 kg/cm^2, 1,067 psi)	3,750 – 5,250 kPa (37.5 – 52.5 kg/cm^2, 533 – 747 psi)

4) As done above, apply 100 kg/cm^2 pressure to front brake and check that rear brake pressure then is within specification as given below.

Rear brake pressure with applied by 100 kg/cm^2 on front brake

Front brake	Rear brake
10,000 kPa (100 kg/cm^2, 1,422 psi)	4,250 – 5,750 kPa (42.5 – 57.5 kg/cm^2, 605 – 818 psi)

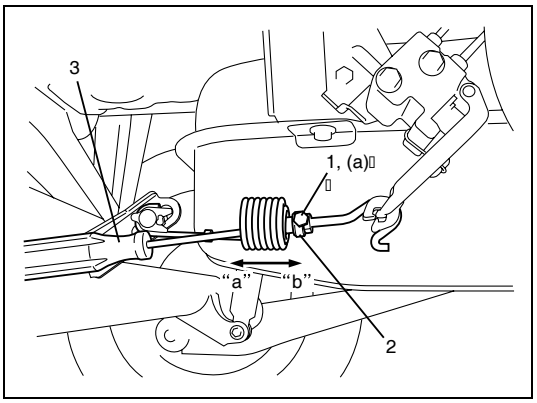

5) If rear brake pressure is not within specification, adjust it by changing spring bracket (2) position as follows.
   Make sure that this adjustment dose not cause any play between bracket (2) and spring (looseness in "a" to "b" direction as indicated in figure).
   - If rear brake pressure is higher than specification, move spring bracket (2) to direction "a" and if it is lower, to direction "b" by pushing spring bracket with a screw driver (3).
   - Repeat steps 3) and 4) until rear brake pressure is within specification.
   - After adjustment, be sure to torque screw (1) to specification.

   Tightening torque
   Setting screw (a): 9 N·m (0.9 kg-m, 6.5 lb-ft)
6) Upon completion of fluid pressure test, bleed brake system and perform brake test.

Booster Operation Check

There are two ways to perform this inspection, with and without a tester. Ordinarily, it is possible to roughly determine its condition without using a tester.

NOTE:

For this check, make sure that no air is in hydraulic line.

Check air tightness

1) Start engine.
2) Stop engine after running for 1 to 2 minutes.

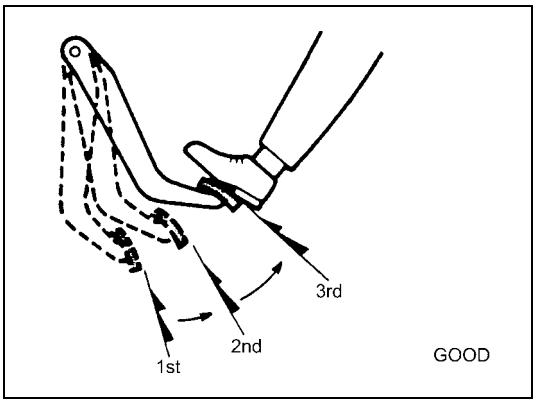

3) Depress brake pedal several times with the same load as in ordinary braking and observe pedal travel. If pedal goes down deep the first time but its travel decreases as it is depressed the second and more times, air tightness is obtained.

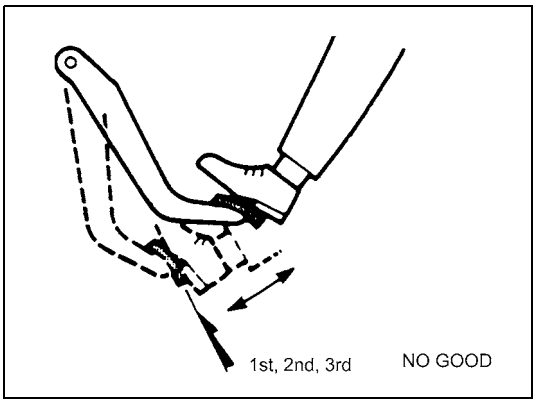

4) If pedal travel doesn't change, air tightness isn't obtained.

NOTE:

If defective, inspect vacuum lines and sealing parts, and replace any faulty part.
When this has been done, repeat the entire test.

Check operation

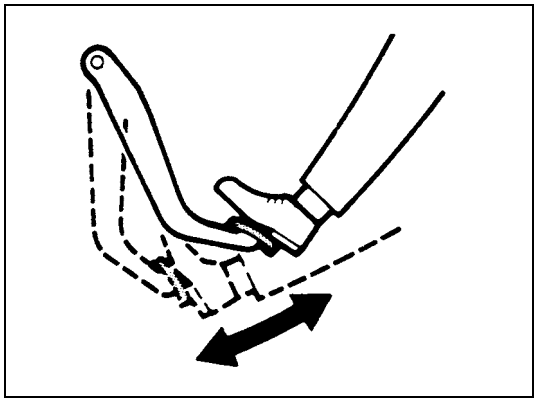

1) With engine stopped, depress brake pedal several times with the same load and make sure that pedal travel doesn't change.

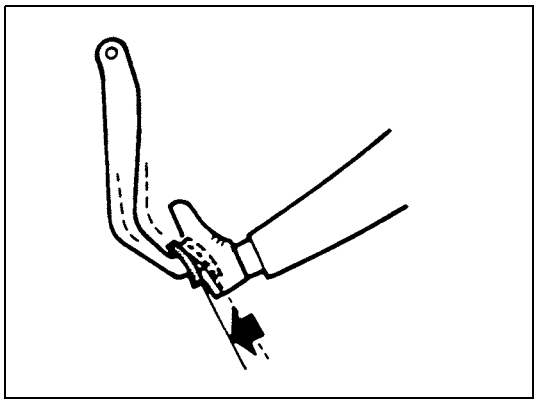

2) Start engine while depressing brake pedal. If pedal travel increases a little, operation is satisfactory. But no change in pedal travel indicates malfunction.

Check air tightness under load

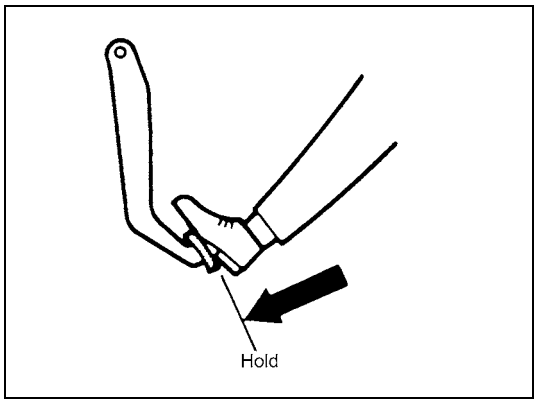

1) With engine running, depress brake pedal. Then stop engine while holding brake pedal depressed.

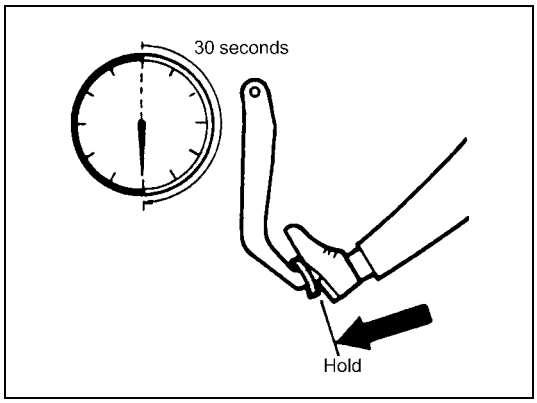

2) Hold brake pedal depressed for 30 seconds. If pedal height does not change, condition is good. But it isn't if pedal rises.

Tightening Torque Specifications

Fastening part		Tightening torque		
		N•m	kg-m	lb-ft
Brake pipe flare nut		16	1.6	11.5
Brake bleeder plug	Front caliper	6.5	0.65	5.0
	Wheel cylinder	8.5	0.85	6.5
LSPV mounting bolt		26	2.6	19.0
LSPV spring end nut		20	2.0	14.5
LSPV spring bracket screw		9	0.9	6.5
Wheel bolt		95	9.5	69.0

Required Service Material

Material	Recommended SUZUKI product (Part Number)	Use
Brake fluid	DOT 4 or SAE J1704	• To fill master cylinder reservoir • To clean and apply to inner parts of caliper and wheel cylinder when they are disassembled

Special Tool

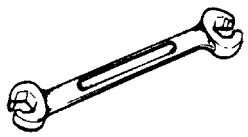	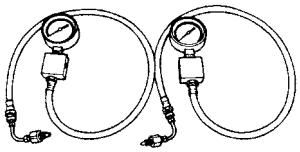	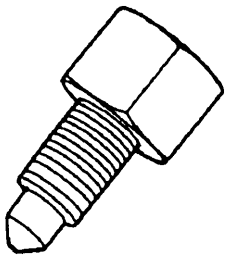	
09950-78230 Flare nut wrench (10 x 11 mm)	09956-02311 Fluid pressure gauge	09952-36311 Pressure gauge attachment	09952-48320 Pressure gauge attachment

SECTION 5A

BRAKES PIPE / HOSE / MASTER CYLINDER

WARNING:

For vehicles equipped with Supplemental Restraint (Air Bag) System:

- **Service on and around the air bag system components or wiring must be performed only by an authorized SUZUKI dealer. Refer to "System Components and Wiring Location View" under "General Description" in air bag system section in order to confirm whether you are performing service on or near the air bag system components or wiring. Please observe all WARNINGS and "Service Precautions" under "On-Vehicle Service" in air bag system section before performing service on or around the air bag system components or wiring. Failure to follow WARNINGS could result in unintentional activation of the system or could render the system inoperative. Either of these two conditions may result in severe injury.**
- **Technical service work must be started at least 90 seconds after the ignition switch is turned to the "LOCK" position and the negative cable is disconnected from the battery. Otherwise, the system may be activated by reserve energy in the Sensing and Diagnostic Module (SDM).**

NOTE:

All brake fasteners are important attaching parts in that they could affect the performance of vital parts and systems, and/or could result in major repair expense. They must be replaced with one of same part number or with an equivalent part if replacement becomes necessary. Do not use a replacement part of lesser quality or substitute design. Torque values must be used as specified during reassembly to assure proper retention of all parts. There is to be no welding as it may result in extensive damage and weakening of the metal.

CONTENTS

General Description 5A-3
LSPV (Load Sensing Proportioning Valve) Assembly Description (if equipped) 5A-3
Diagnosis 5A-3
Check and Adjustment 5A-3
On-Vehicle Service 5A-4
Front Brake Hose Components Location 5A-4
Front Brake Pipe Components Location 5A-5
Rear Brake Hose / Pipe Components Location 5A-7
Brake Hose / Pipe Removal and Installation 5A-8
Master Cylinder Reservoir Removal and Installation (for LH Model) 5A-9
Master Cylinder Reservoir Removal and Installation (for RH Model) 5A-11
Master Cylinder Components 5A-12
Master Cylinder Removal and Installation (for LH Model) 5A-13
Master Cylinder Removal and Installation (for RH Model) 5A-15
Master Cylinder Disassembly and Assembly (for RH Model) 5A-16
Master Cylinder Assembly Inspection (for RH Model) 5A-19
Master Cylinder Check (for LH Model) 5A-20
Master Cylinder Check (for RH Model) 5A-20
Brake Booster Components Locator 5A-21
Brake Booster Removal and Installation (for LH Model) 5A-21
Brake Booster Removal and Installation (for RH Model) 5A-22
Brake Booster Inspection (for LH Model) 5A-24
Brake Booster Inspection and Adjustment (for RH Model) 5A-24
LSPV (Load Sensing Proportioning Valve) Assembly Components Locator (if equipped) 5A-26
LSPV (Load Sensing Proportioning Valve) Removal and Installation 5A-26
LSPV (Load Sensing Proportioning Valve) Inspection and Adjustment 5A-28
Brake Pedal and Brake Pedal Bracket Components Location 5A-29

Brake Pedal and Brake Pedal Bracket Removal and installation 5A-30
Stop (Brake) Lamp Switch Removal and Installation 5A-30

Tightening Torque Specifications 5A-31
Required Service Material 5A-31
Special Tools 5A-32

General Description

LSPV (Load Sensing Proportioning Valve) Assembly Description (if equipped)

As shown in the figure below, LSPV is included within the brake circuit which connects the master cylinder and the rear wheel brake. It controls the hydraulic pressure applied to the rear wheel brake according to the loaded state of the vehicle (or weight of the load), whereby preventing the rear wheels from getting locked prematurely.

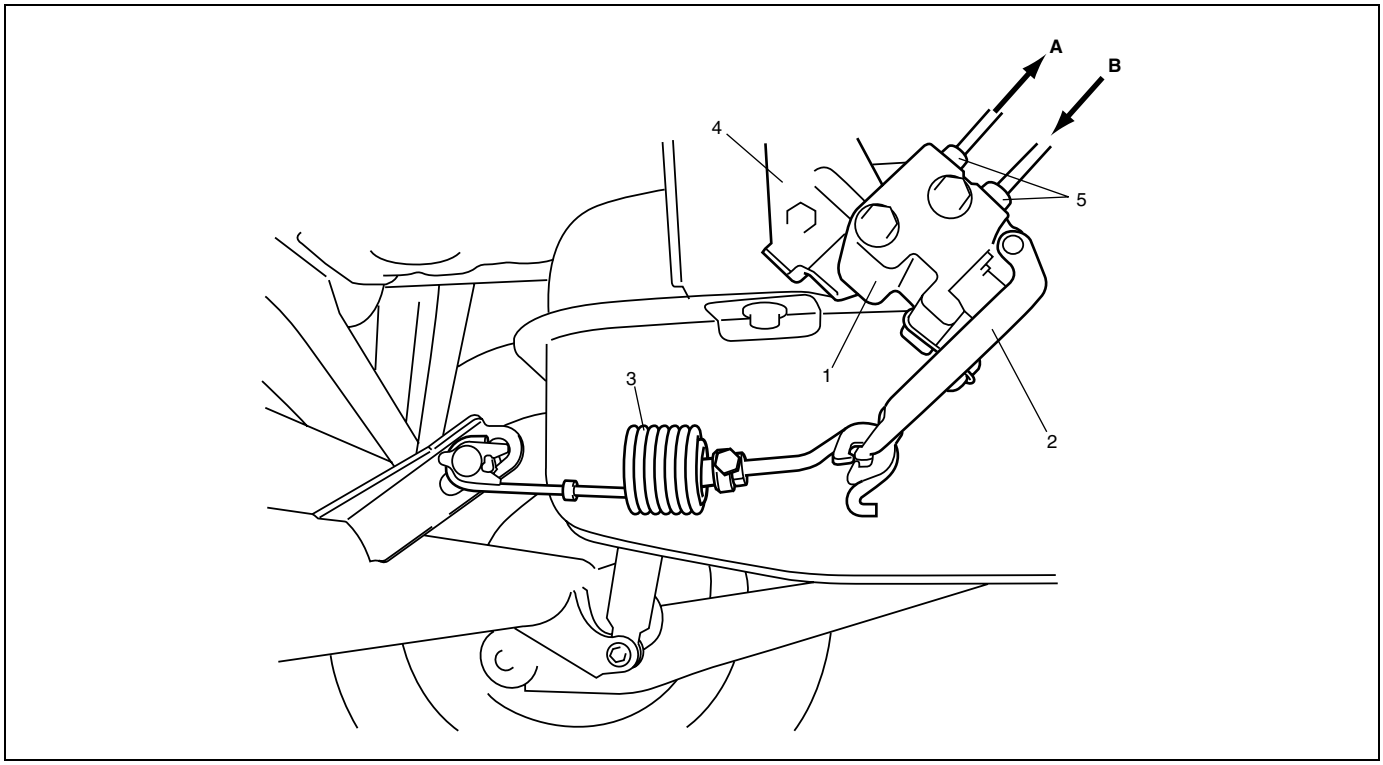

1. LSPV assembly	3. Spring	5. Brake pipe flare nut	B. from master cylinder
2. LSPV lever	4. Bracket	A. to rear brake	

Diagnosis

Refer to Section 5 BRAKES.

Check and Adjustment

Refer to Section 5 BRAKES.

On-Vehicle Service

CAUTION:

- **Lubricate rubber parts with clean, fresh brake fluid to ease assembly.**
- **Do not use lubricated shop air on brake parts as damage to rubber components may result.**
- **If any hydraulic component is removed or brake line disconnected, bleed the brake system.**
- **The torque values specified are for dry, unlubricated fasteners.**
- **Do not allow brake fluid to get on painted surfaces. Painted surfaces will be damaged by brake fluid.**

Front Brake Hose Components Location

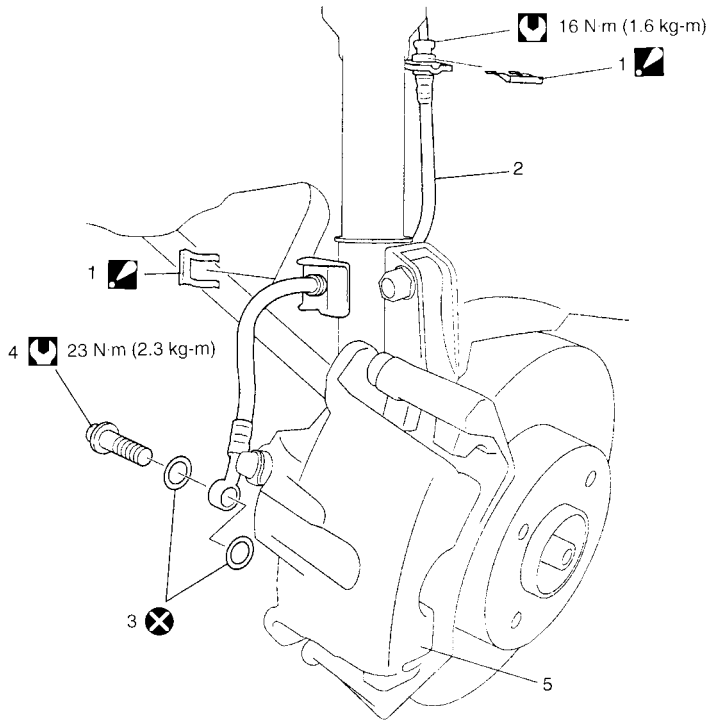

◪	1. E-ring: Insert E-ring till its end surface is flush with or deeper than bracket end surface.	3. Hose washer	5. Bracket caliper	Tightening torque
	2. Flexible hose	4. Hose bolt		⊗ Do not reuse

Front Brake Pipe Components Location

For vehicle with ABS

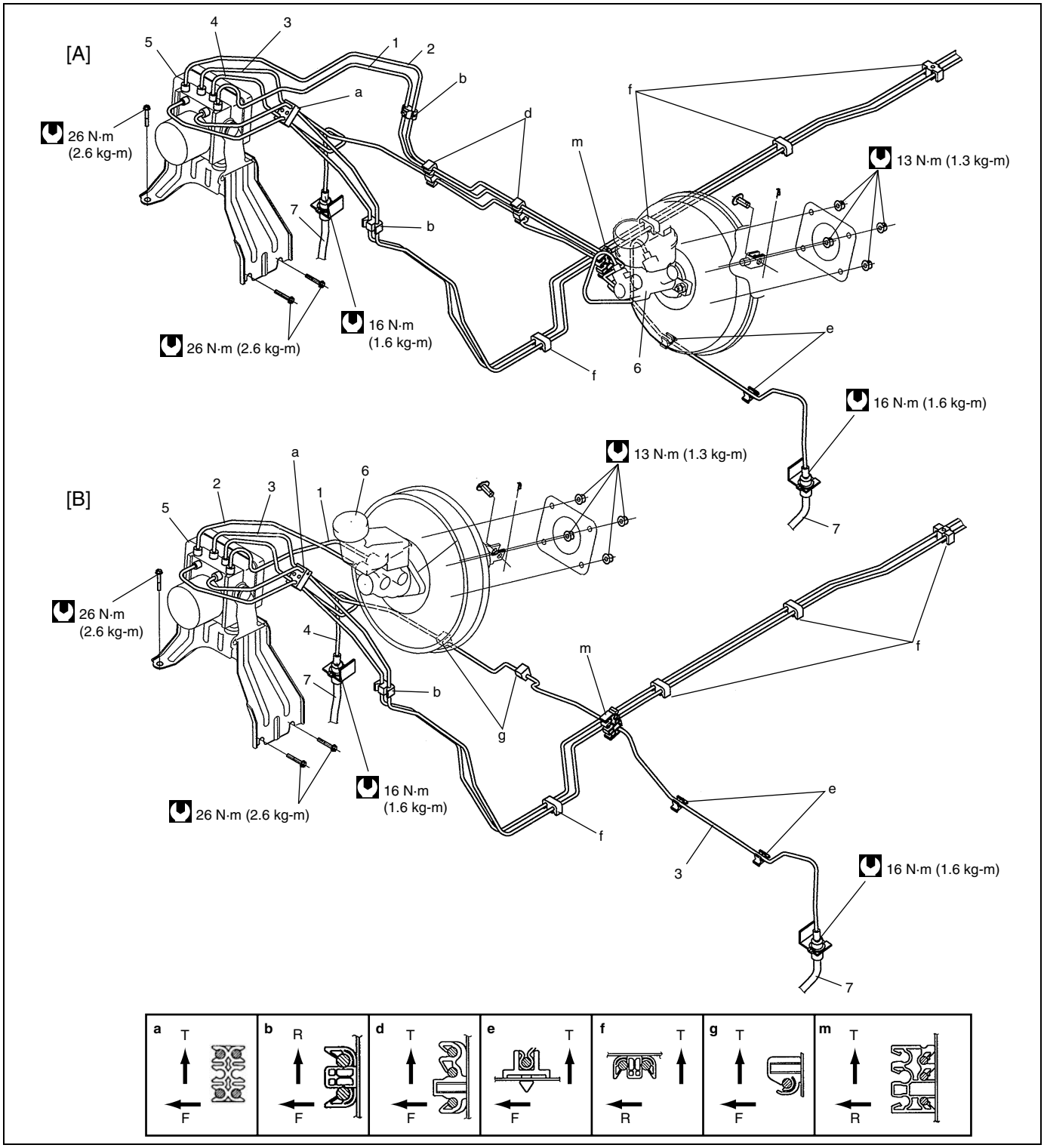

T: Top side	1. from master cylinder primary to ABS hydraulic unit	5. ABS hydraulic unit	[A]: For left-hand steering vehicle
F: Front side	2. from master cylinder secondary to ABS hydraulic unit	6. Master cylinder	[B]: For right-hand steering vehicle
R: Right side	3. from ABS hydraulic unit to left front brake	7. Front brake hose	Tightening torque
a-m: Clamp	4. from ABS hydraulic unit to right front brake		

For vehicle without ABS

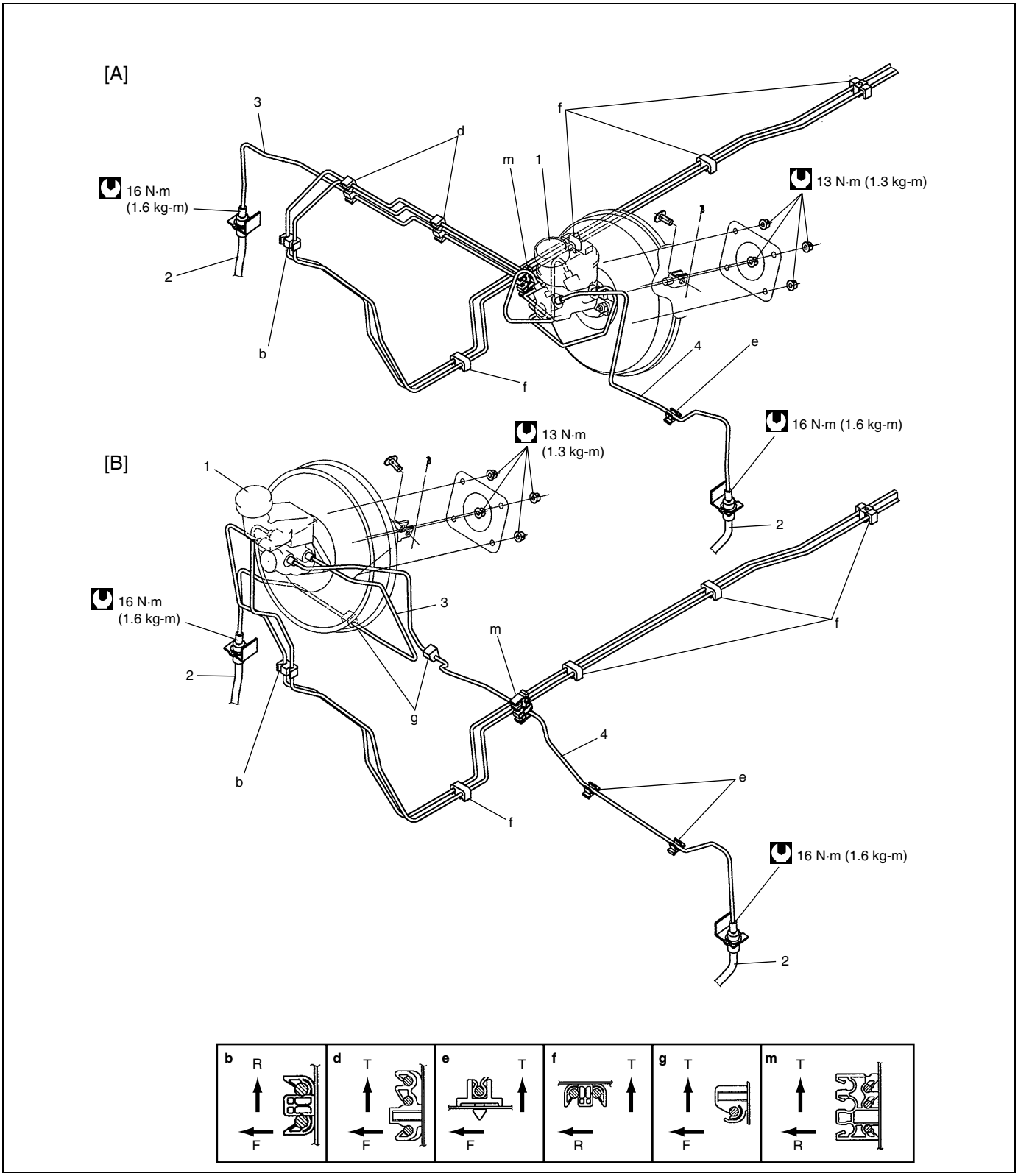

T: Top side	1. Master cylinder	[A]: For left-hand steering vehicle
F: Front side	2. Front brake hose	[B]: For right-hand steering vehicle
R: Right side	3. from master cylinder primary to right front brake	Tightening torque
b-m: Clamp	4. from master cylinder secondary to left front brake	

Rear Brake Hose / Pipe Components Location

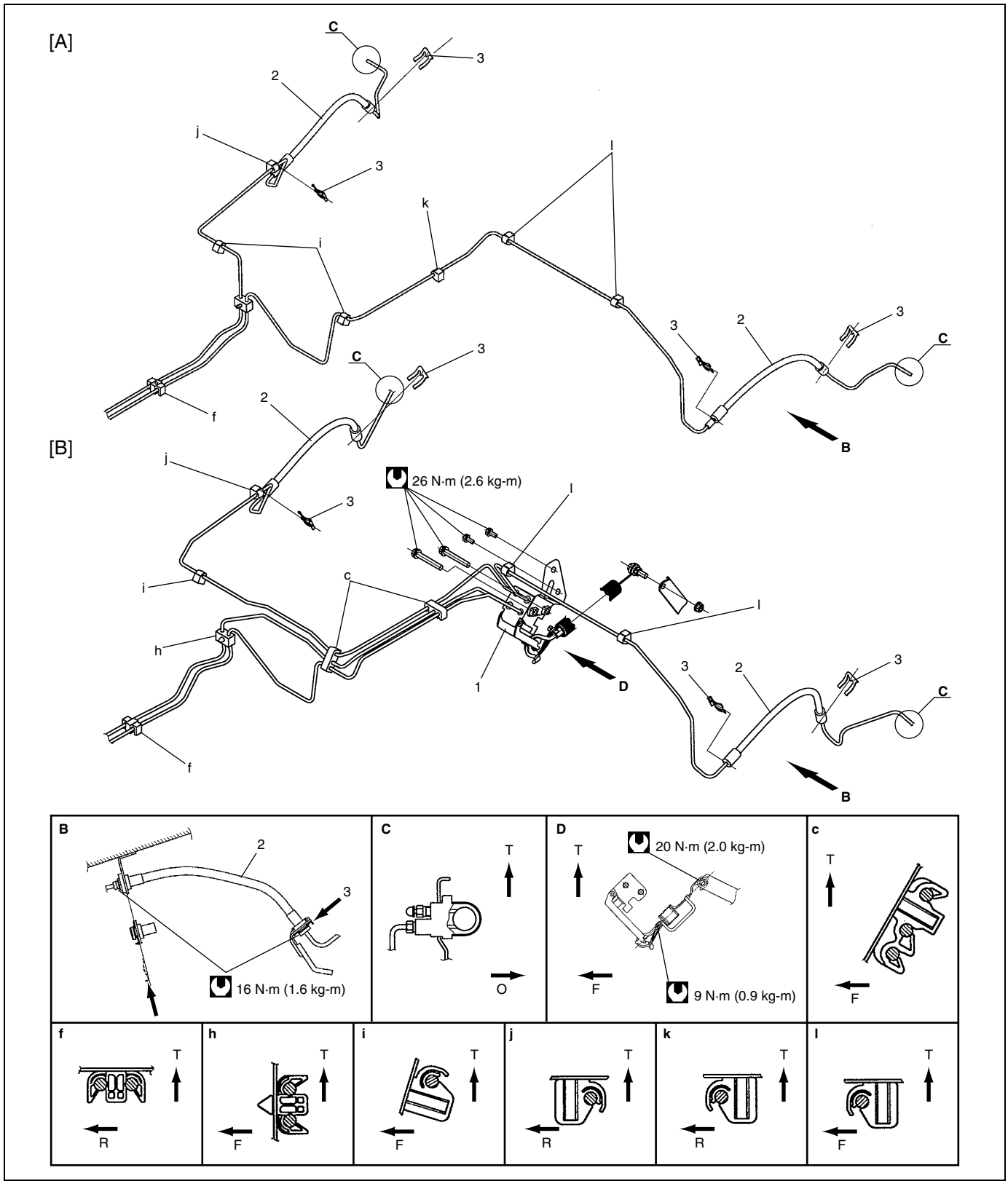

T: Top side	B. View B	1. LSPV assembly	[A]: with ABS
F: Front side	C. Detail	2. Rear brake hose	[B]: with LSPV
R: Right side	D. View D	3. E-ring	Tightening torque
L: Left side	c-l: Clamp		

Brake Hose / Pipe Removal and Installation

REMOVAL

1) Raise and support vehicle properly. Remove tire and wheel referring to “Wheel Removal and Installation” in Section 3F.
2) Clean dirt and foreign material from both flexible hose end and pipe end fittings.
3) Drain brake fluid in reservoir.

CAUTION:
Do not allow brake fluid to get on painted surface. painted surface will be damaged by brake fluid, flush it with water immediately if any fluid is spilled.

4) Remove brake flexible hose or pipe.

INSTALLATION (FOR FRONT BRAKE)

Reverse brake flexible hose installation procedure, noting the following.

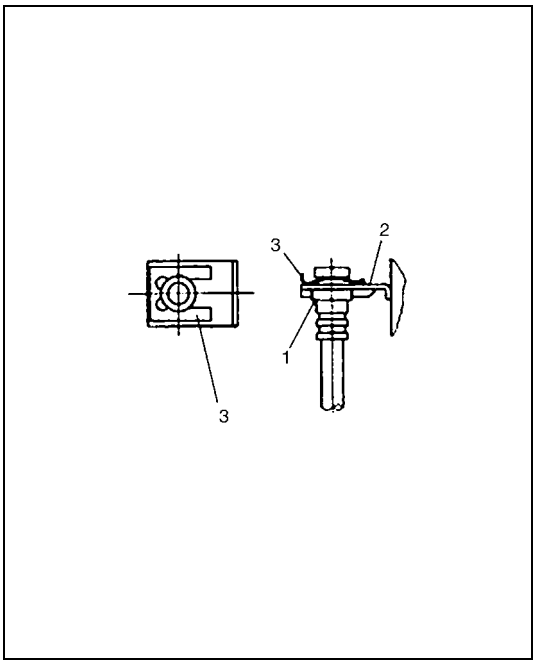

- Install brake hose securely, making sure that there is no faulty condition such as inclination of metal fitting (1) of hose relative to bracket (2) of vehicle body.
- Install E-ring (3) securely, making sure that it does not project from end face of bracket (2).
  After installing E-ring (3), check to make sure that tip end of ring is not open and that there is no clearance between metal fitting of hose end bracket.
- Make sure that steering wheel is in straight-forward position and flexible hose has not twist or kink.
- Check to make sure that flexible hose doesn't contact any part of suspension, both in extreme right and extreme left turn conditions. If it does at any point, remove and correct.
- Fill and maintain brake fluid level in reservoir.
- Bleed brake system. Refer to “Air Bleeding of Brake System” in Section 5.
- Perform brake test and check installed part for fluid leakage.

INSTALLATION (FOR REAR BRAKE)

Reverse brake flexible hose installation procedure, nothing the followings.

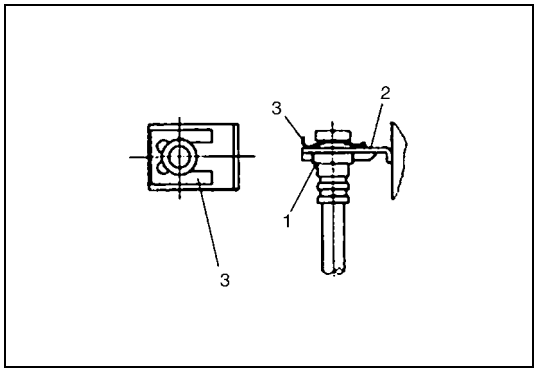

- Install brake hose securely, making sure that there is no faulty condition such as inclination of metal fitting (1) of hose relative to bracket (2) of vehicle body.
- Install E-ring (3) securely, making sure that it does not project from end face of bracket (2).
  After installing E-ring (3), check to make sure that tip end of ring is not open and that there is no clearance between metal fitting of hose end bracket.

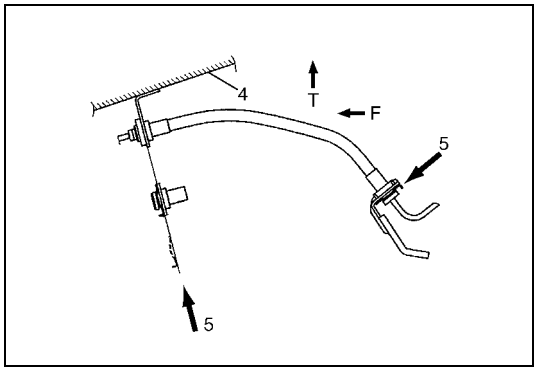

T: Top side	4. Side member
F: Front side	5. E-ring Insure direction

- Fill and maintain brake fluid level in reservoir.
- Bleed brake system. Refer to “Air Bleeding of Brake System” in Section 5.
- Perform brake test and check each installed part for fluid leakage.
- Install clamps properly referring to figure and tighten bolts.
- When installing hose, make sure that it has no twist or kink.

Master Cylinder Reservoir Removal and Installation (for LH Model)

CAUTION:

Observe CAUTION at the beginning of On-Vehicle Service.

REMOVAL

1) Clean outside of reservoir.

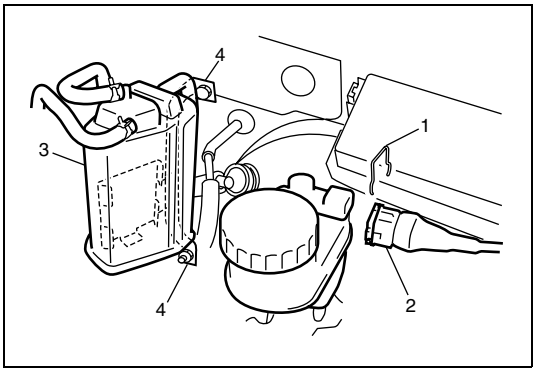

2) Remove switch lock pin (1) and disconnect coupler (2).
3) Remove EVAP canister (3) and bracket (4).
4) Take out fluid with syringe or such.

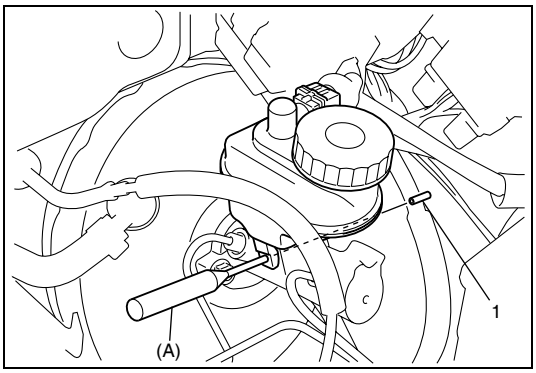

5) Remove reservoir connector pin (1) using special tool.

Special tool
(A): 09922-85811

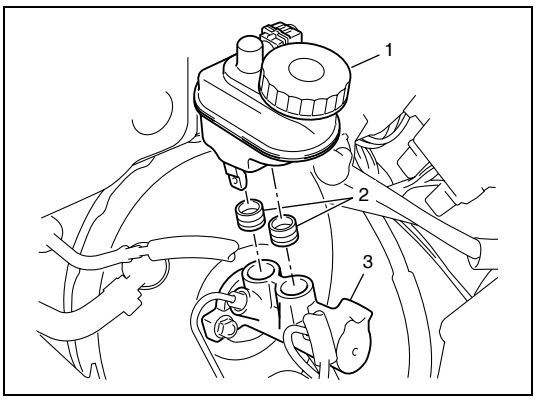

6) Remove reservoir (1) and grommets (2) from master cylinder(3).

INSTALLATION

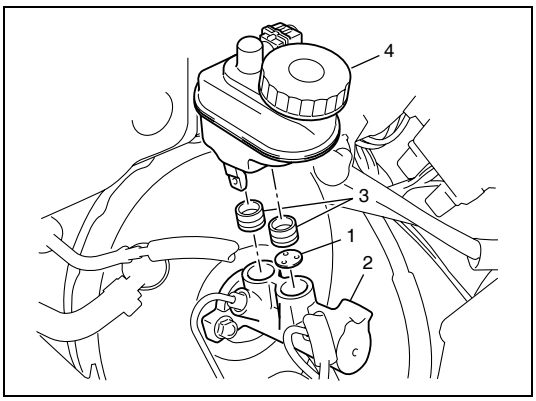

1) Install pin washer retainer (1) to secondary reservoir port of master cylinder (2) if removed.
2) When using new grommets, lubricate them with the same fluid as the one to fill reservoir with. Then fit grommets (3) to master cylinder. Grommets must be seated in place.

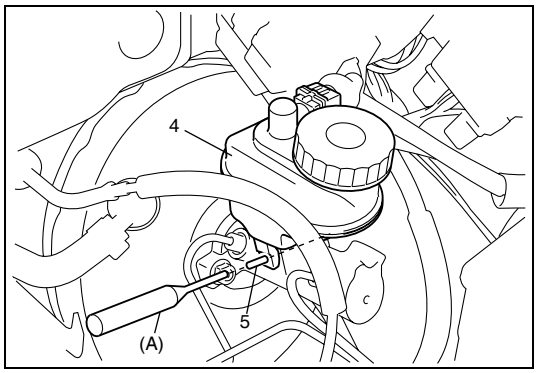

3) Install reservoir (4) and drive in reservoir pin (5).
   Drive in reservoir pin till both of its ends at the right and left of reservoir becomes the same length.

Special tool
(A): 09922-85811

4) Connect coupler and install lock pin.
5) Install EVAP bracket and canister.

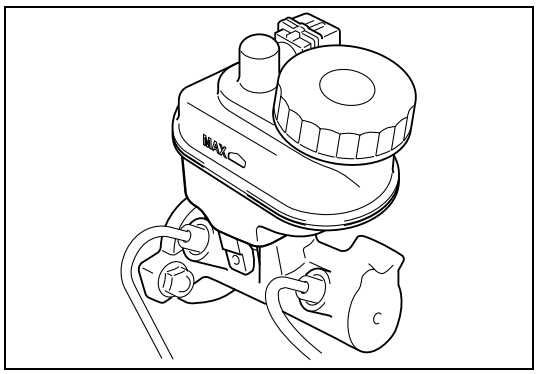

6) Fill reservoir with specified brake fluid up to MAX mark on it and bleed air from brake system. Refer to “Air Bleeding of Brake System” in Section 5.
7) Upon completion of installation, check for fluid leakage.

Master Cylinder Reservoir Removal and Installation (for RH Model)

REMOVAL

1) Remove master cylinder referring to “Master Cylinder Removal and Installation (for RH Model)” in this section.

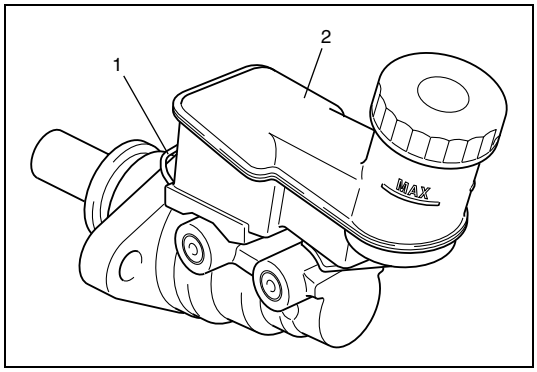

2) Pull out retainer (1) and remove reservoir (2).

INSTALLATION

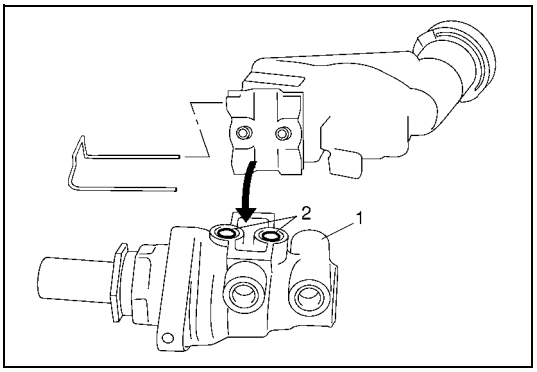

1) Apply brake fluid to new grommets and attach grommets (2) to master cylinder (1).

NOTE:

Be sure to use new grommets.

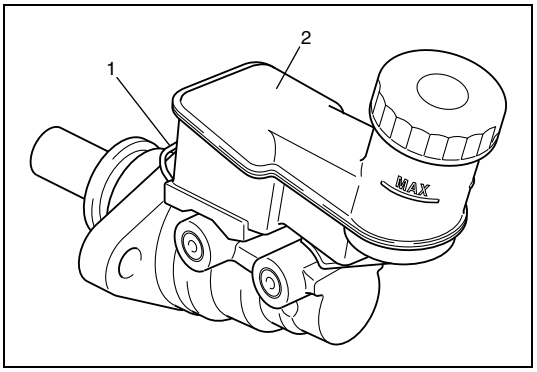

2) Install reservoir (2) to master cylinder and insert retainer (1).
3) Install master cylinder referring to “Master Cylinder Removal and Installation (for RH Model)” in this section.
4) Fill reservoir with specified brake fluid up to MAX mark on it.
5) After installation, bleed air from system and check for brake fluid leakage.

Master Cylinder Components

Left-hand Steering Vehicle

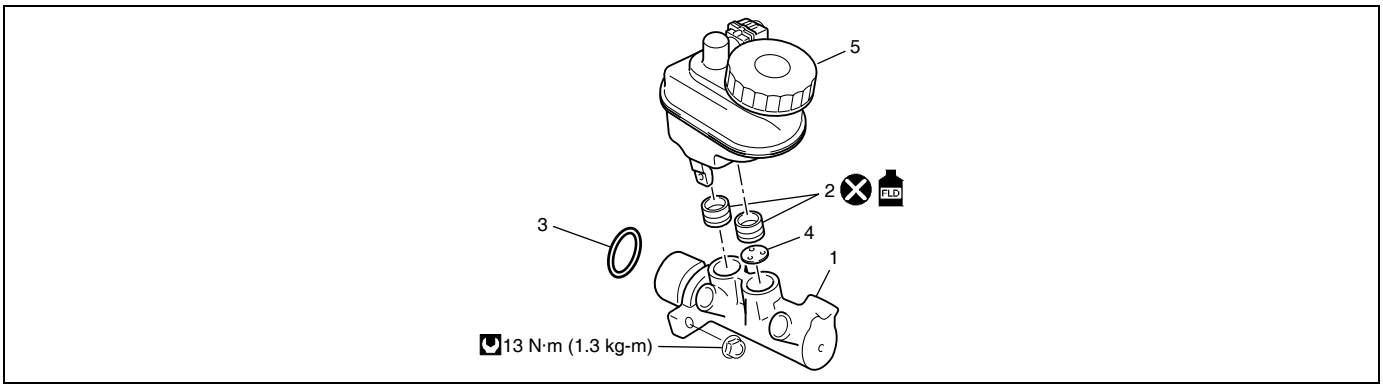

1. Master cylinder body	3. O-ring	5. Reservoir	Do not reuse
2. Grommet: :Apply brake fluid.	4. Pin washer retainer (with ABS)	Tightening torque	

Right-hand Steering Vehicle

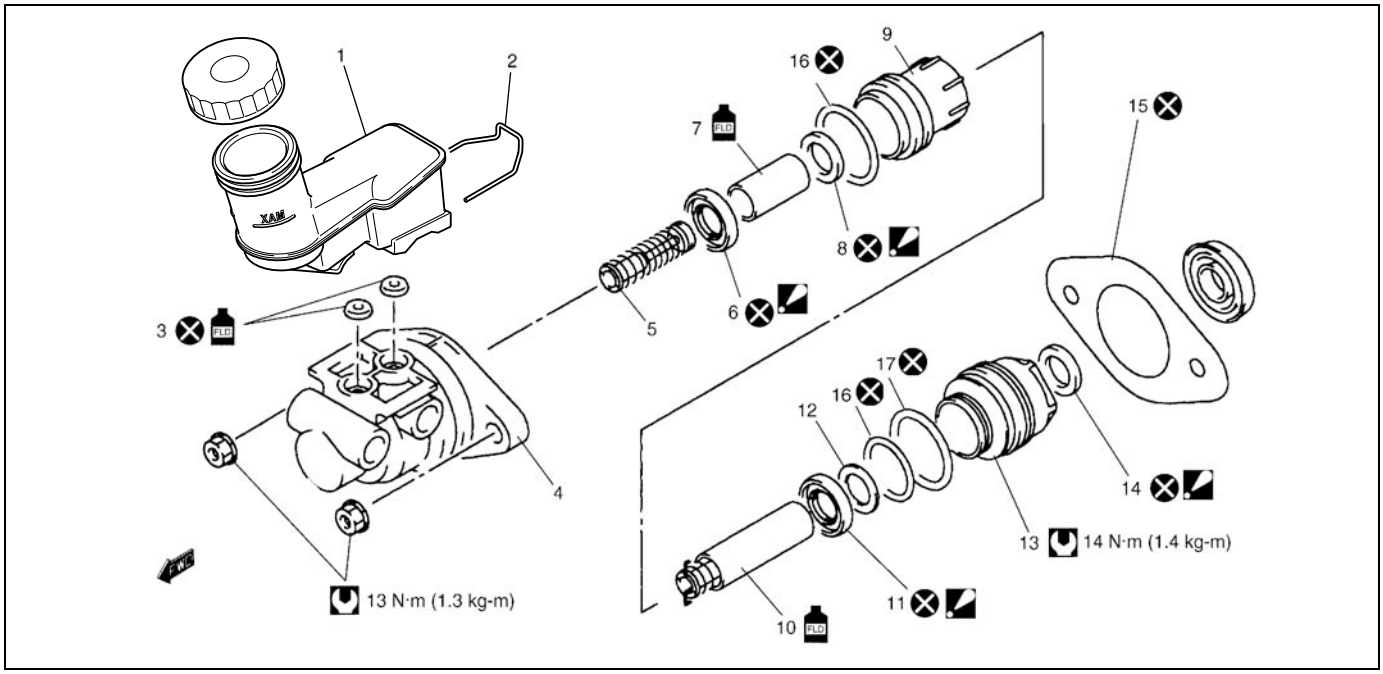

	1. Reservoir		10. Primary piston : Apply brake fluid to contact surface of cup.		Tightening torque
	2. Retainer		11. Primary cup : Confirm installing direction.		Do not reuse.
	3. Grommet : Apply brake fluid.		12. Cup spacer		
	4. Master cylinder body		13. Cap		
	5. Secondary return spring		14. Cap cup : Confirm installing direction.		
	6. Secondary cup : Confirm installing direction Size of cup.		15. Master cylinder gasket		
	7. Secondary piston : Apply brake fluid to contact surface of cup.		16. O-ring (small)		
	8. Sleeve cup : Confirm installing direction.		17. O-ring (large)		
	9. Sleeve				

Master Cylinder Removal and Installation (for LH Model)

CAUTION:

- **Never disassemble master cylinder. Disassembly will spoil its original performance. If faulty condition is found, replace it with new one.**
- **Observe CAUTION at the beginning of On-Vehicle Service.**

REMOVAL

1) Clean around master cylinder and reservoir.

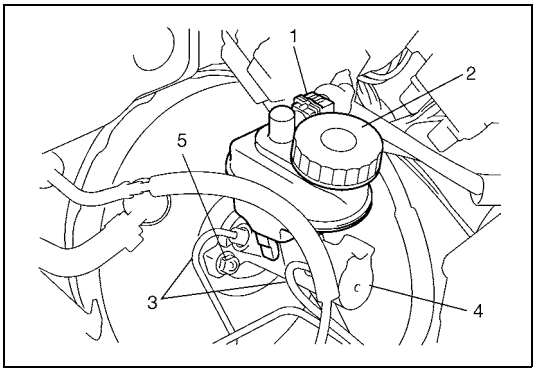

2) Disconnect fluid level switch coupler (1) on reservoir.
3) Remove reservoir cap (2) and take out fluid with syringe or such.
4) Disconnect brake pipes (3) connected with master cylinder (4).
5) Remove master cylinder mounting nuts (5).

6) Remove master cylinder from brake booster.

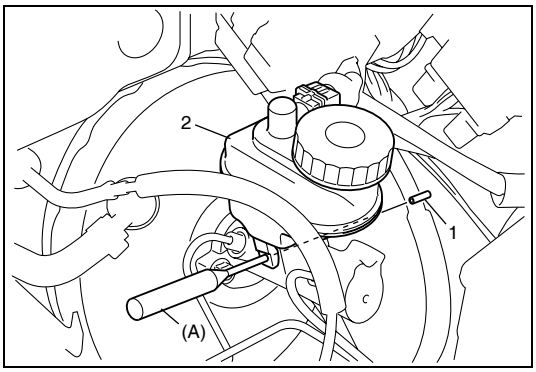

7) Remove reservoir pin (1) and reservoir (2) by using special tool.

Special tool
(A): 09922-85811

INSTALLATION

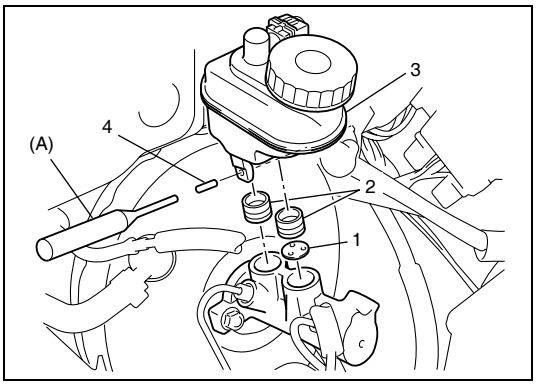

1) Install pin washer retainer (1) if removed.
Apply thin coat of brake fluid to all around new grommets (2) and install them to cylinder body, then install reservoir (3).

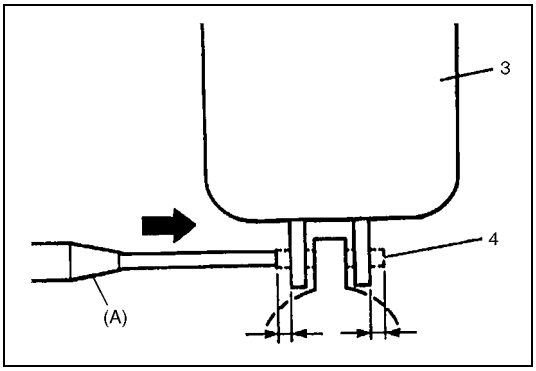

2) Drive in reservoir connector pin (4).

NOTE:

Drive in reservoir pin (4) till both of its ends at the right and left of reservoir becomes the same length.

Special tool
(A): 09922-85811

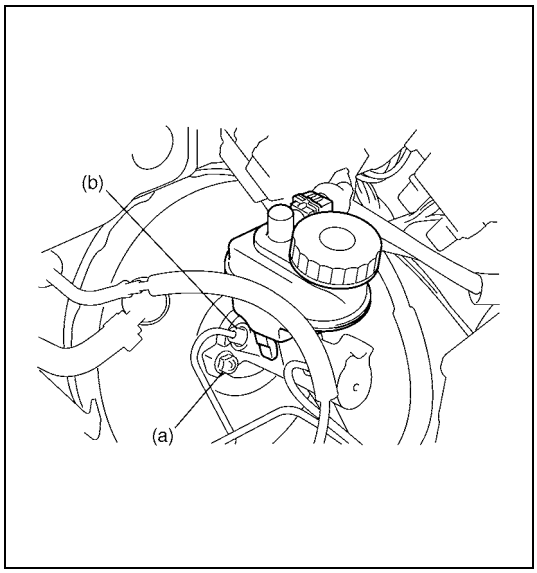

3) Install master cylinder to brake booster.
4) Torque master cylinder mounting nuts to specification.

Tightening torque
Cylinder mounting nut (a): 13 N·m (1.3 kg-m, 9.5 lb-ft)

5) Connect hydraulic lines and torque flare nuts to specification.

Tightening torque
Brake pipe flare nut (b): 16 N·m (1.6 kg-m, 11.5 lb-ft)

6) Connect reservoir lead wire.
7) Fill reservoir with specified brake fluid up to MAX mark on it.
8) After installing, check brake pedal play and bleed air from system.
9) Perform brake test and check each installed part for fluid leakage.

Master Cylinder Removal and Installation (for RH Model)

REMOVAL

1) Clean outside of master cylinder.
2) Drain brake fluid in reservoir.

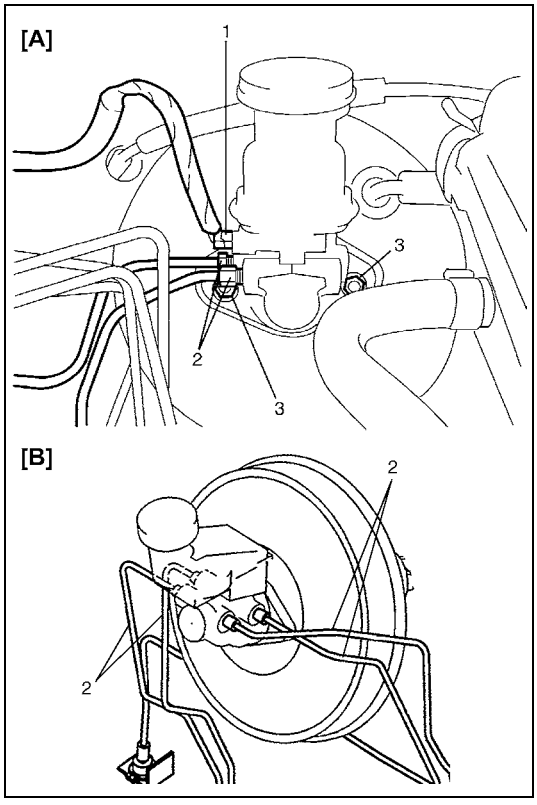

3) Disconnect fluid level switch coupler (1) on reservoir.
4) Disconnect brake pipes (2) connected to master cylinder.

[A]: with ABS
[B]: without ABS

5) Remove master cylinder mounting nuts (3).
6) Remove master cylinder and master cylinder gasket.

INSTALLATION

1) Install new master cylinder gasket to booster.
2) Install master cylinder to booster and tighten master cylinder mounting nuts (3) to specified torque.

Tightening torque
Master cylinder mounting nuts
(a): 13 N·m (1.3 kg-m, 9.5 lb-ft)

3) Connect brake pipe to master cylinder and tighten flare nut (2) to specified torque.

Tightening torque
Brake pipe flare nut (b): 16 N·m (1.6 kg-m, 11.5 lb-ft)

4) Connect fluid level switch connector (1) of reservoir.

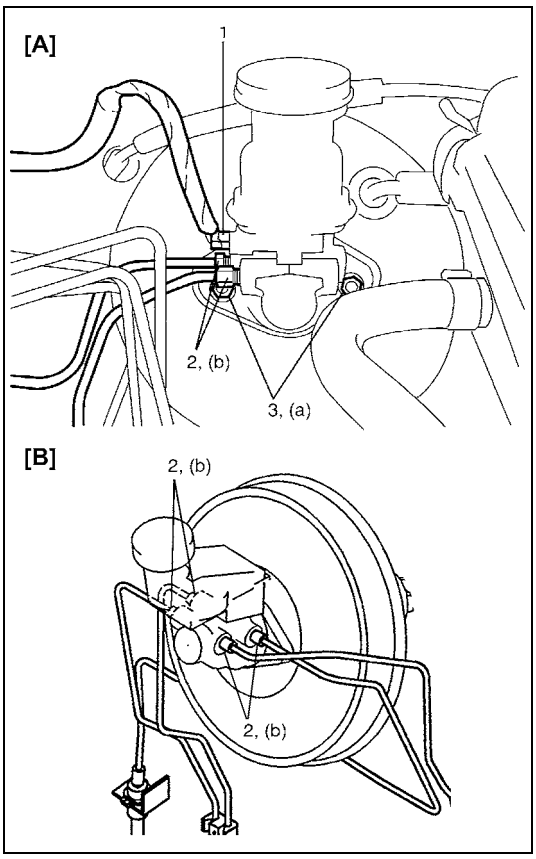

[A]: with ABS
[B]: without ABS

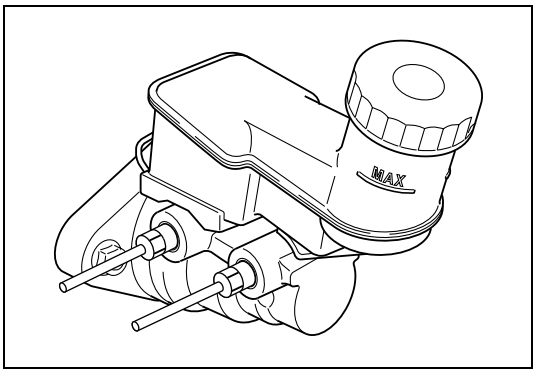

5) Fill reservoir with specified brake fluid up to its MAX mark.
6) After completing above work, bleed air and check brake pedal for play.
7) Perform brake test and check each installed part for fluid leakage.

Master Cylinder Disassembly and Assembly (for RH Model)

DISASSEMBLY

1) Loosen cap and remove it.

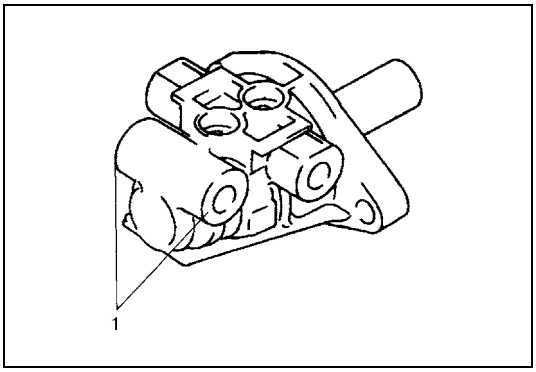

NOTE:
For this work, apply a cloth to outlet port at the tip end (1) of master cylinder body and secure cylinder using soft jawed vise.

2) Remove component parts from master cylinder body.

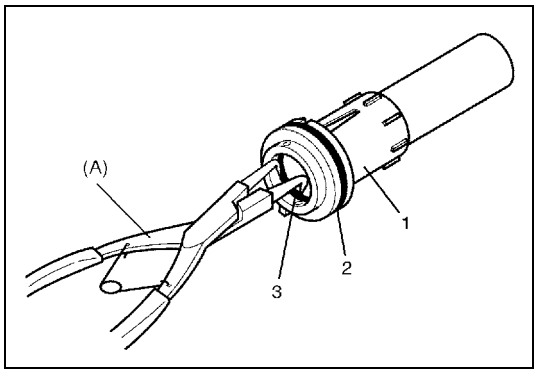

3) Remove sleeve cap (3) and O-ring (2) from sleeve (1).

Special tool
(A): 09900-06106

CAUTION:
Do not cause any damage to inside of sleeve. If caused, replace primary piston assembly.

ASSEMBLY

CAUTION:
- **Never use any mineral oil such as kerosene oil and gasoline when washing and assembling parts.**
- **Check inside of cylinder (sleeve, cap) wall, pistons and cup seals are free from any foreign objects such as dust and dirt and use case not to cause any damage with a tool during assembly.**
- **Do not drop parts. Do not use any part which has been dropped.**

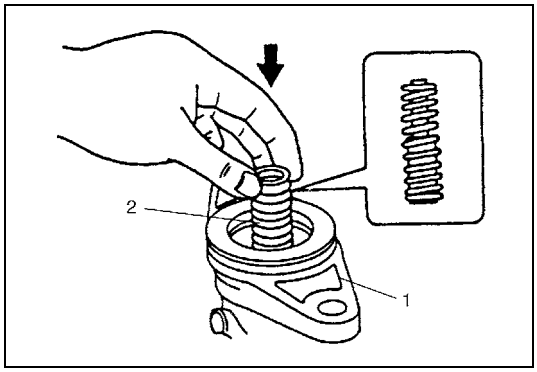

1) Apply brake fluid to inside of cylinder (Sleeve, cap), cups, O-rings and contact surface of piston assembly.
Install secondary return spring (2) to cylinder body (1) with noting spring direction.

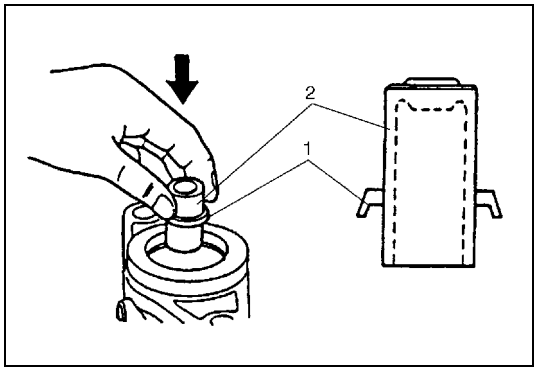

2) Attach secondary cup (1) to secondary piston (2), they install it to cylinder such a direction as shown.

NOTE:
- **Secondary cup is the same as primary cup.**
- **Diameter of secondary cup is the largest compared with sleeve cup and cap cup.**

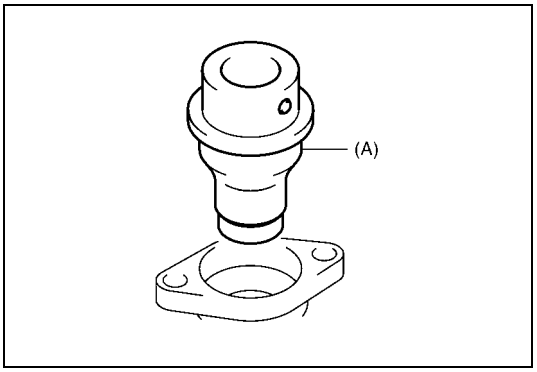

3) Push secondary cup to the bottom by using special tool.

Special tool
(A): 09951-18220

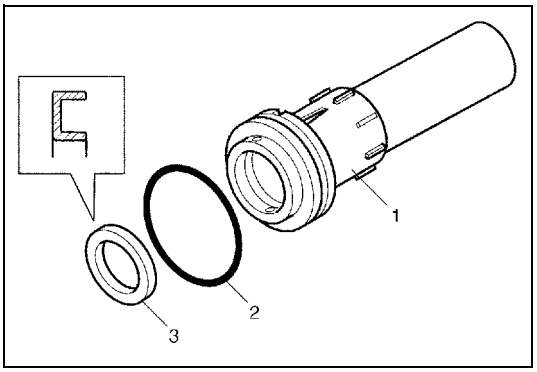

4) Install sleeve cup (3) and O-ring (2) to sleeve (1) such a direction as shown.

NOTE:

- **Diameter of sleeve cup and O-ring are smaller than those of cap.**
- **O-ring is the same as that of smaller one of cap O-ring.**

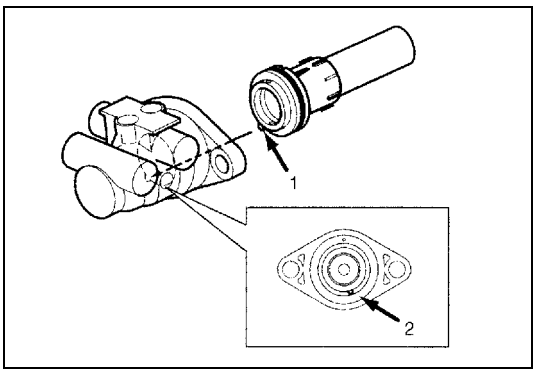

5) Install sleeve assembly with aligning protrusion (1) of sleeve and dent (2) of cylinder body.

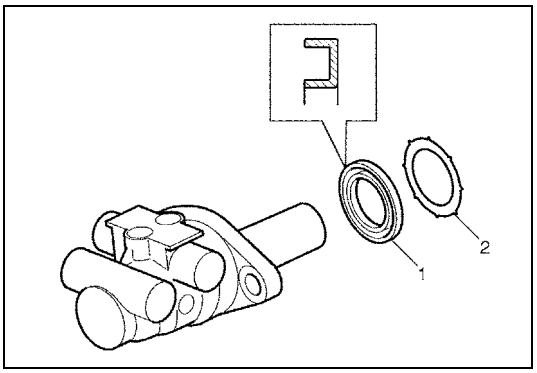

6) Install primary cup (1) and spacer (2) such a direction as shown.

NOTE:

- **Primary cup is the same as secondary cup.**
- **Primary cup is the largest compared with that of cap and sleeve.**

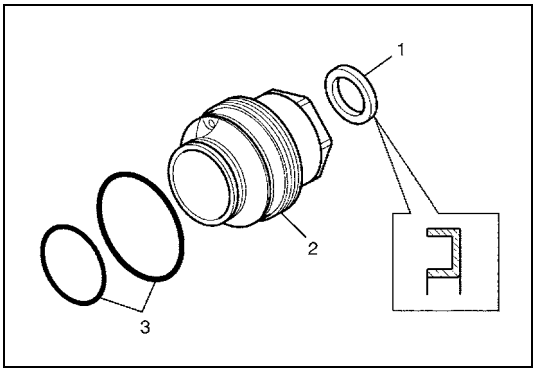

7) Remove old cap cup (1) from cap with caring not to cause any damage to inside of cap (2).
8) Install new cap cup (1) and O-rings (3) to cap such a direction as shown.

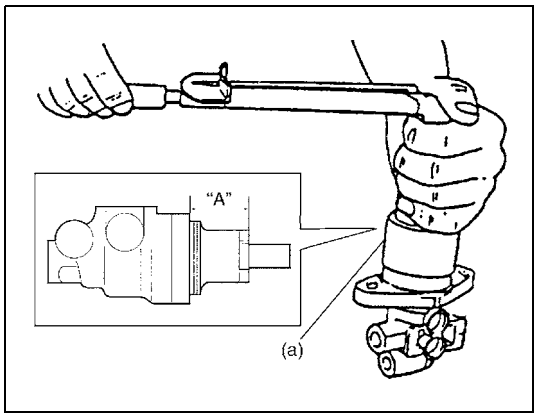

9) Install cap and tighten it to specified torque, then confirm the length "A".

Tightening torque
Master cylinder cap (RH vehicle)
(a): 14 N·m (1.4 kg-m, 10.5 lb-ft)

Cap installation position
"A": Less than 26 mm (1.02 in.)

CAUTION:
Whenever master cylinder is assembled, make sure all the function of master cylinder assembly referring to "Master Cylinder Assembly Inspection (for RH Model)".

Master Cylinder Assembly Inspection (for RH Model)

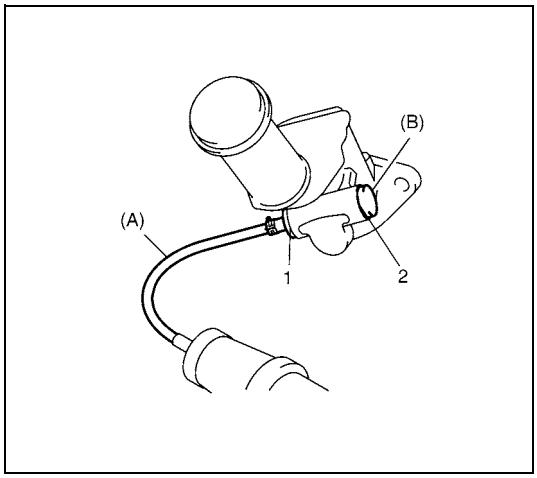

1) Install radiator cap tester with special tool to master cylinder port (1).

NOTE:
For without ABS vehicle, install special tool (B) to opposite side port (2).

Special tool
(A): 09952-46010
(B): 09952-26020

2) Apply air and confirm that pressure is not applied.

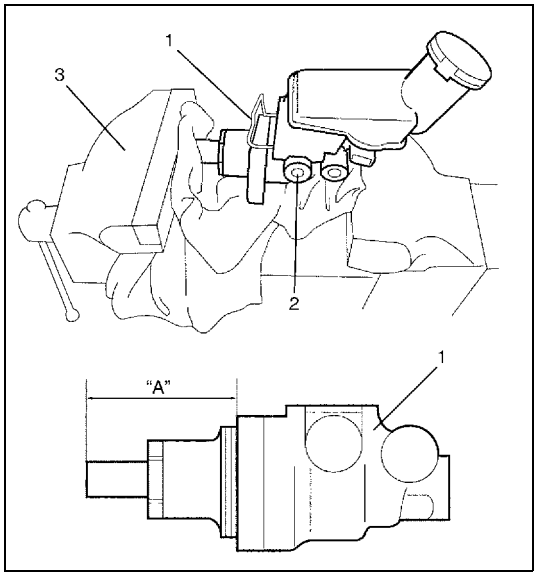

3) Set master cylinder (1) on vise (3) and adjust "A" to be the following.

Cap adjustment position
"A": 50 mm (1.97 in.)

4) Apply air with radiator cap tester, and confirm that 50 kPa pressure is applied.
5) Perform same steps 1) – 4) for port (2).

Master Cylinder Check (for LH Model)

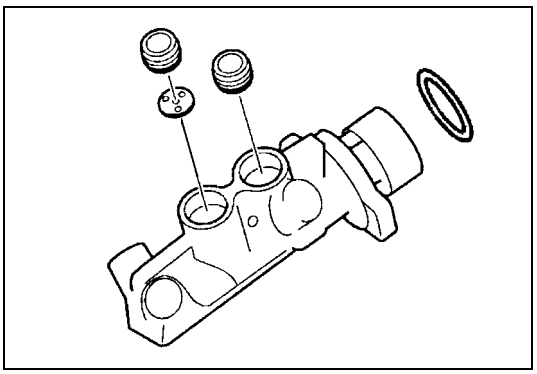

Inspect each parts for wear, deterioration or damage, and replace parts if necessary.
Inspect master cylinder for scoring, corrosion and smooth operation. It is best to replace corroded cylinder.
Corrosion can be identified as pits or excessive roughness.

Master Cylinder Check (for RH Model)

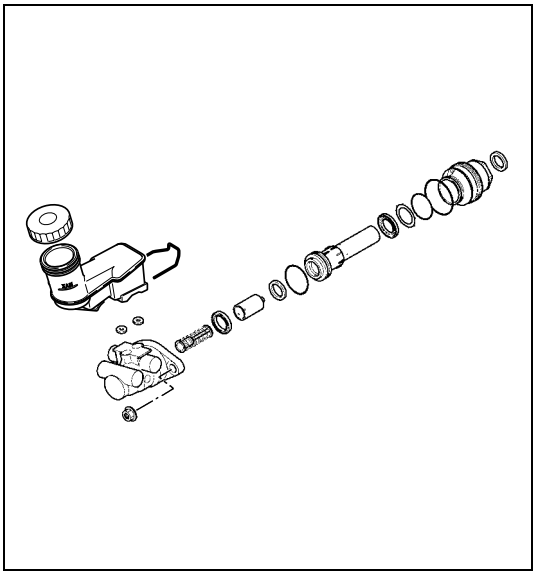

1) Check all disassembled parts for wear, damage, corrosion and smooth operation.
   If anything faulty is found, replace.

CAUTION:
- **Wash disassembled parts with brake fluid.**
- **Do not reuse piston cups and O-rings.**

2) Check screw hole in master cylinder for gall or corrosion.
   If anything faulty is found, replace.

CAUTION:
Wash master cylinder with new brake fluid. Do not use cloth to dry cylinder so as to avoid fibers being attached to internal surface of cylinder.

Brake Booster Components Locator

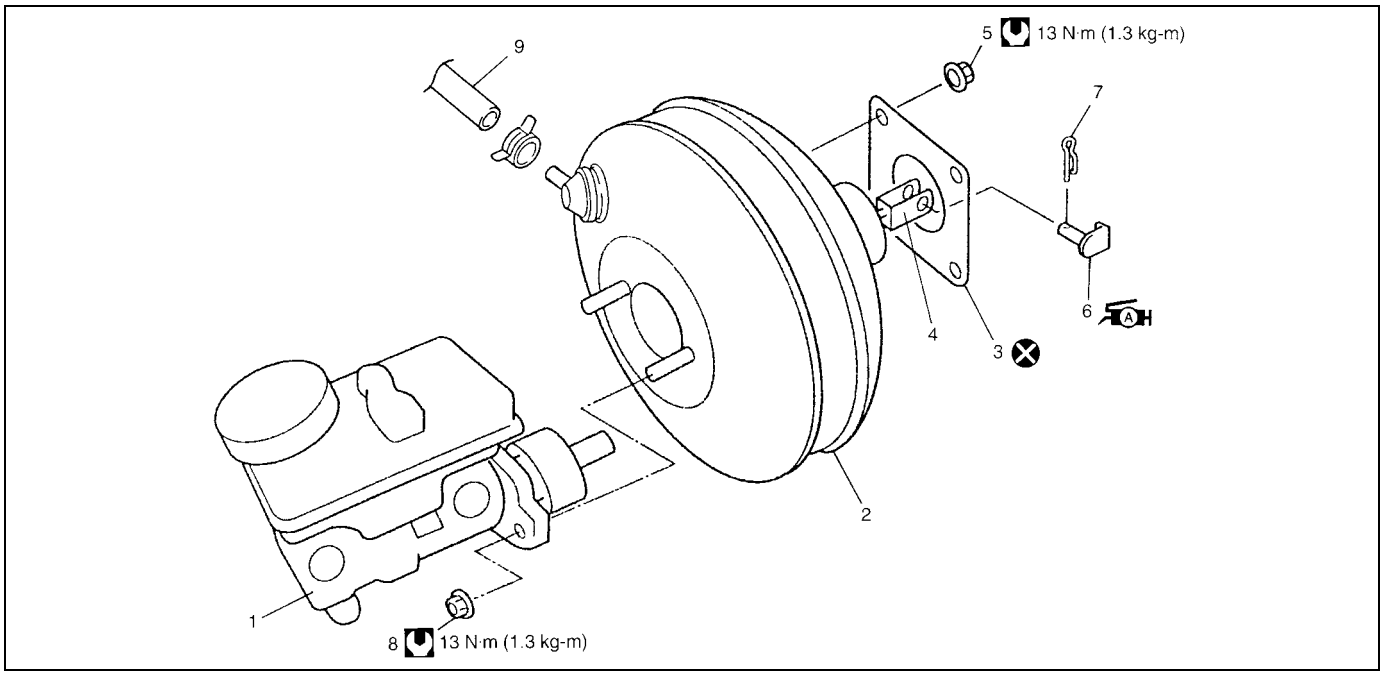

1. Brake master cylinder assembly	4. Push rod clevis	7. Clip	Tightening torque
2. Brake booster assembly	5. Nut	8. Nut	Do not reuse
3. Gasket	6. Clevis pin: Apply SUZUKI SUPER GREASE A 99000-25010 to clevis pin.	9. Brake vacuum hose	

Brake Booster Removal and Installation (for LH Model)

CAUTION:

- **Never disassemble brake booster. Disassembly will spoil its original function. If it is found faulty, replace it with new one.**
- **Observe CAUTION at the beginning of On-Vehicle Service.**

REMOVAL

1) Remove master cylinder assembly, referring to “Master Cylinder Removal and Installation (for LH Model)” in this section.
2) Disconnect brake vacuum hose from brake booster.

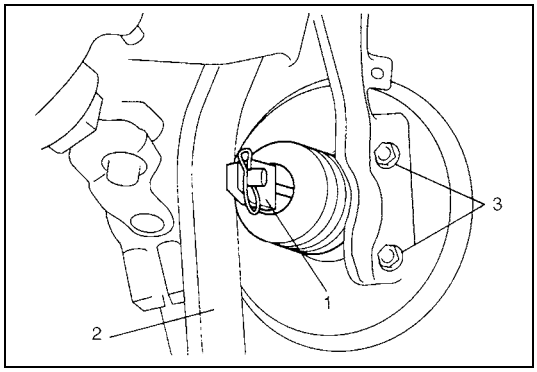

3) Disconnect push rod clevis (1) from brake pedal arm (2).
4) Remove attaching nuts (3) and then booster.

INSTALLATION

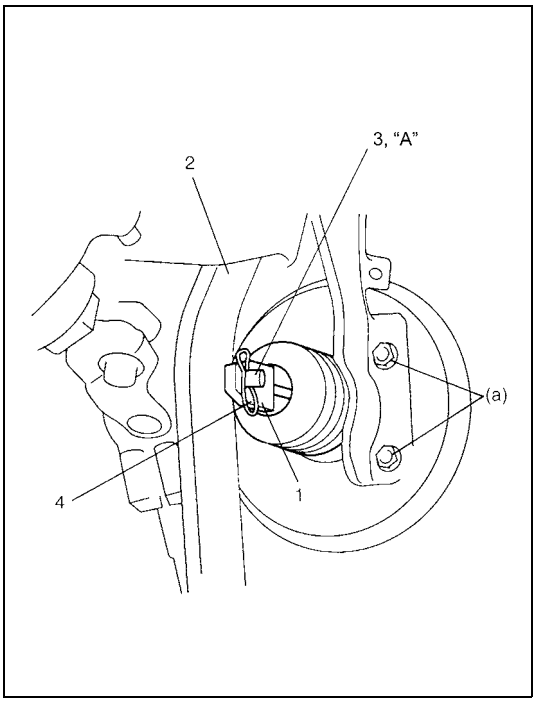

NOTE:

Check for push rod length referring to "Brake Booster Inspection (for LH Model)".

1) Install new gasket and booster to dash panel as shown. Then connect booster push rod clevis (1) to pedal arm (2) with clevis pin (3) and clip (4).

"A": Grease A 99000-25010

2) Tighten booster mounting nuts to the specified torque.

Tightening torque
Booster mounting nut (a): 13 N·m (1.3 kg-m, 9.5 lb-ft)

3) Connect brake vacuum hose to brake booster.
4) Install master cylinder, referring to "Master Cylinder Removal and Installation (for LH Model)" of this section.
5) After installing, perform "Booster Operation Check" referring to Section 5.

Brake Booster Removal and Installation (for RH Model)

CAUTION:

Never disassemble brake booster. Disassembly will spoil its original function. If faulty condition is found, replace it with new one.

REMOVAL

1) Remove master cylinder assembly from booster. Refer to "Master Cylinder Removal and Installation (for RH Model)" in this section.
2) Disconnect vacuum hose from booster.

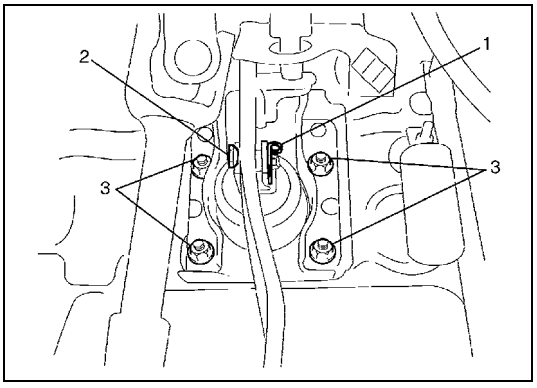

3) Remove push rod clevis clip (1), pin (2) and brake booster mounting nuts (3).
   If brake booster contacts engine and makes it difficult to remove it, perform following steps.

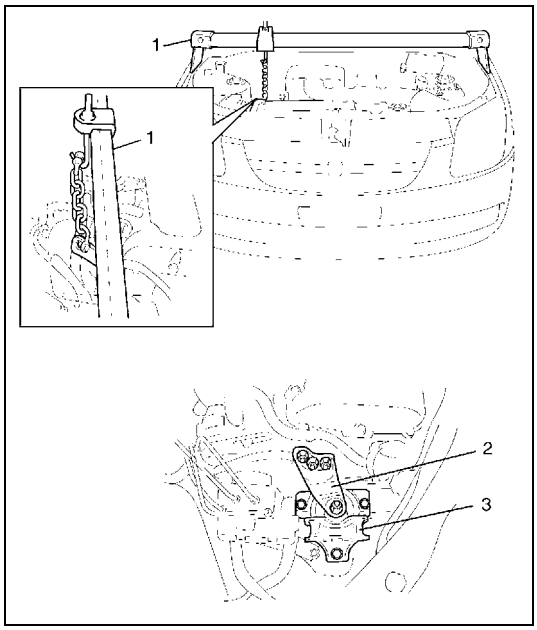

a) Support engine right side by using support device (1).
b) Remove engine right side mounting (3) with bracket (2).
c) Lower engine right side a little and remove brake booster.

INSTALLATION

1) Check and adjust clearance between booster piston rod and master cylinder piston referring to “Brake Booster Inspection and Adjustment (for RH Model)” in this section.
2) Check and adjust position of push rod devise referring to “Brake Booster Inspection and Adjustment (for RH Model)” in this section.

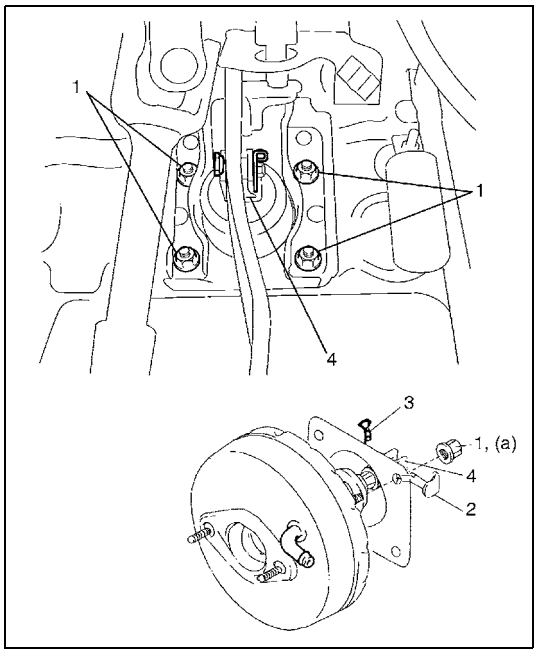

3) Install brake booster to brake pedal and dash panel. Then tighten booster mounting nuts (1) to specified torque and connect push rod clevis (4) to pedal arm with clevis pin (2) and clip (3).

Tightening torque
Booster mounting nut (a): 13 N·m (1.3 kg-m, 9.5 lb-ft)

4) If engine mounting has been removed when removing booster:
Tighten engine right side mounting and bracket bolts and nuts to specified torque. Remove support device. For tightening torque, refer to “Engine Mountings Components” in Section 6A1.

5) Install new master cylinder gasket to booster.

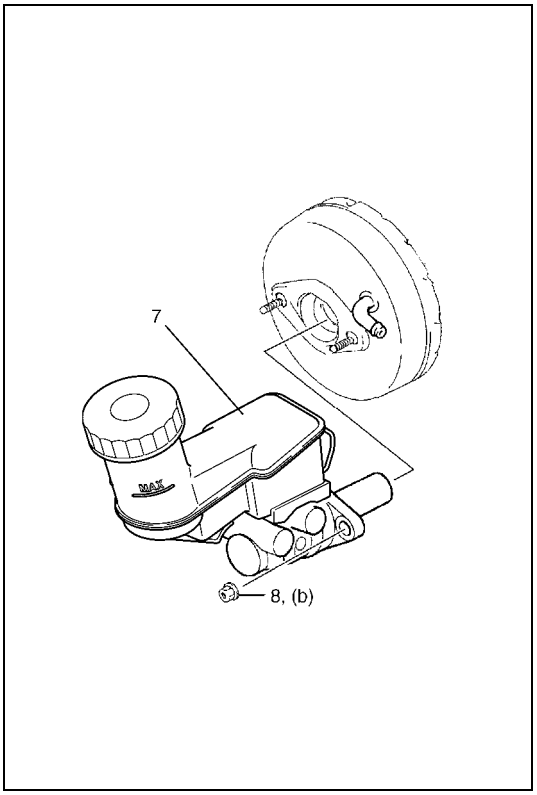

6) Install master cylinder (7) to booster.
7) Tighten master cylinder mounting nuts (8) to specified torque.

Tightening torque
Master cylinder mounting nut
(b): 13 N·m (1.3 kg-m, 9.5 lb-ft)

8) Connect brake pipes and tighten flare nuts to specified torque.

Tightening torque
Brake pipe flare nut: 16 N·m (1.6 kg-m, 11.5 lb-ft)

9) Connect reservoir lead wire connector and booster vacuum hose.
10) Fill reservoir with specified fluid.
11) Bleed air from brake system. Refer to “Air Bleeding of Brake System” in Section 5.
12) After installing, check pedal height and play referring to “Brake Pedal Free Height Check” and “Brake Pedal Play Check” in Section 5.
13) Perform brake test and check each installed part for fluid leakage.

Brake Booster Inspection (for LH Model)

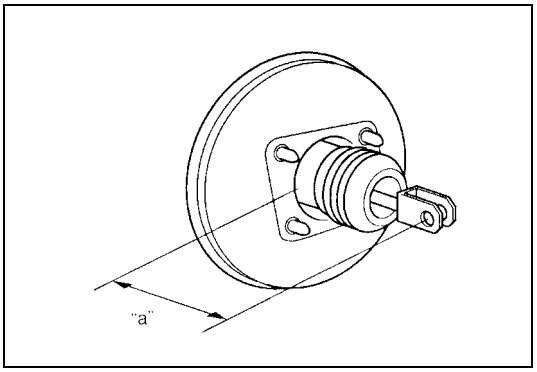

- Check brake booster for damage and operation, boot for damage and deterioration
- Check for push clevis rod distance.
  If any malfunction is found, replace brake booster.

Clevis rod distance
“a”: 97.0 – 98.0 mm (3.82 – 3.85 in.)

Brake Booster Inspection and Adjustment (for RH Model)

INSTALLATION POSITION OF PUSH ROD CLEVIS

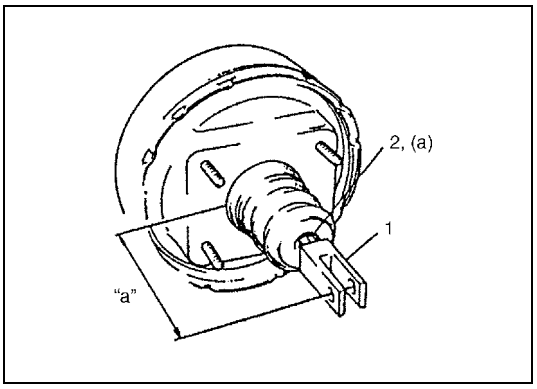

Inspect and adjust distance between booster installation surface (without including packing) and the center of clevis (1) pin hole to standard value “a” and tighten nut (2) to specified torque.

Distance “a” between center of booster clevis pin hole and booster surface
Standard: 97 – 98 mm (3.82 – 3.85 in.)

Tightening torque
Clevis pin lock nut (a): 19 N·m (1.9 kg-m, 14.0 lb-ft)

CLEARANCE BETWEEN BOOSTER PISTON ROD AND MASTER CYLINDER PISTON

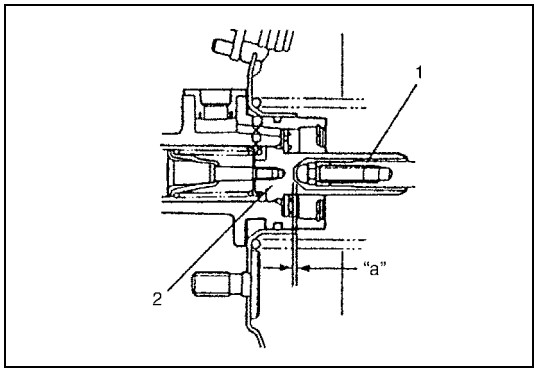

The length of booster piston rod (1) is adjusted to provide specified clearance "a" between piston rod (1) end and master cylinder piston (2).

- Before measuring clearance, push piston rod several times so as to make sure reaction disc is in place.
- Keep inside of booster at atmospheric pressure for measurement.

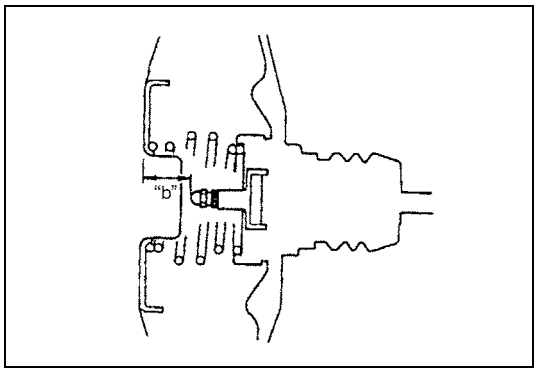

Measure length "b" of piston rod, i.e. distance between piston rod and mating surface of booster-to-master cylinder.

Length "b" of piston rod
30.3 – 30.5 mm (1.193 – 1.200 in.)

NOTE:

Remove gasket from booster, if equipped.

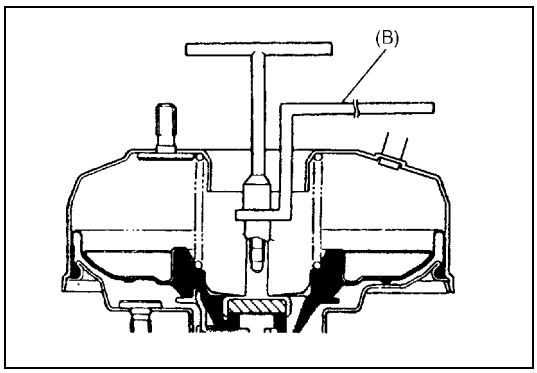

If measurement is out of specification, adjust piston rod by turning adjusting screw of piston rod.

Special tool
(B): 09952-16021

LSPV (Load Sensing Proportioning Valve) Assembly Components Locator (if equipped)

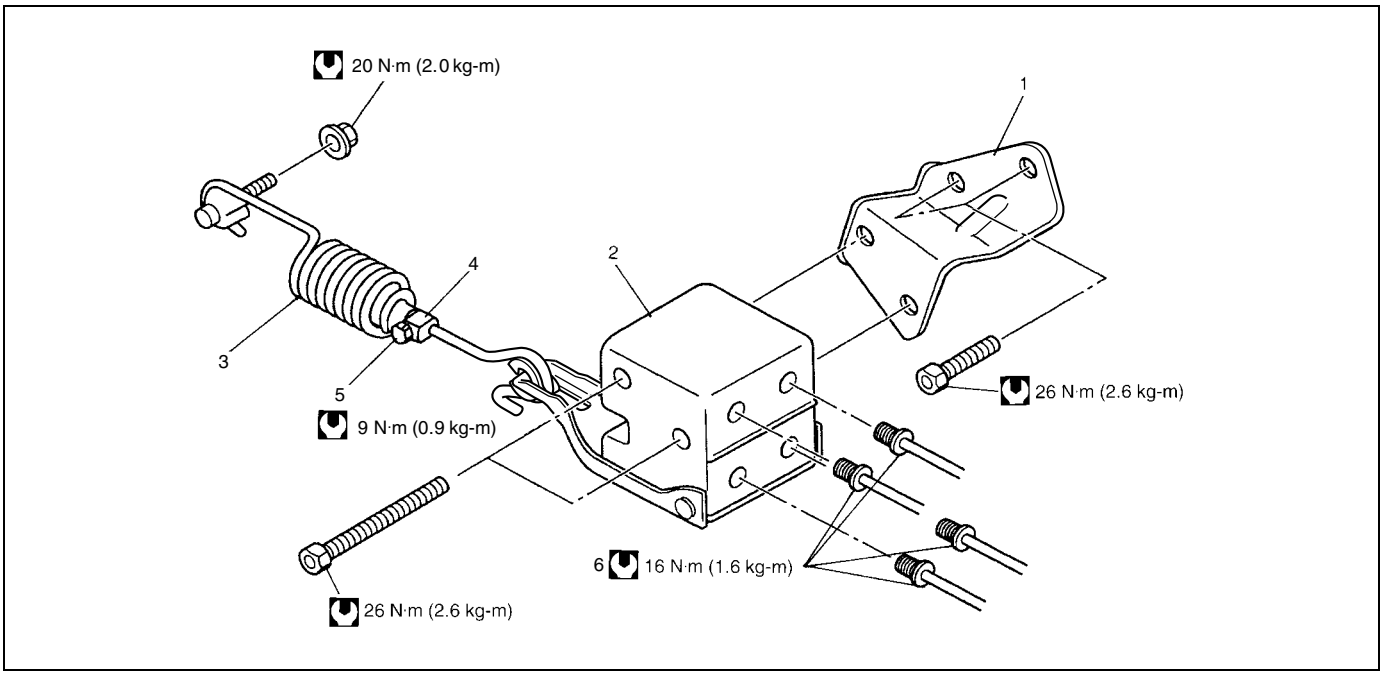

1. LSPV bracket	3. Spring	5. Spring bracket bolt	Tightening torque
2. LSPV assembly	4. Spring bracket	6. Brake pipe flare nut	

CAUTION:
- **Never disassemble LSPV assembly. Disassembly will spoil its original performance. Replace with new one if detective.**
- **Observe CAUTION at the beginning of On-Vehicle Service.**

LSPV (Load Sensing Proportioning Valve) Removal and Installation

REMOVAL

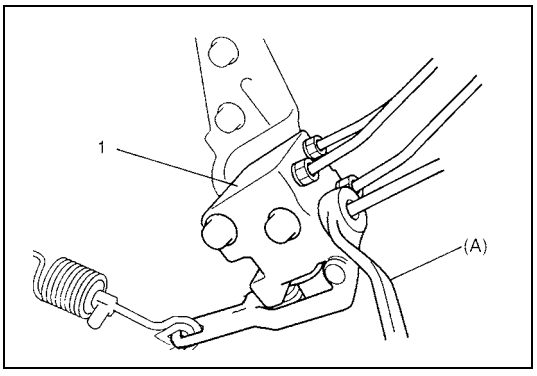

1) Clean around reservoir cap and take out fluid with syringe or such.
2) Hoist vehicle.
3) Disconnect brake pipes from LSPV assembly (1).

Special tool
(A): 09950-78230 (10 x 11 mm)

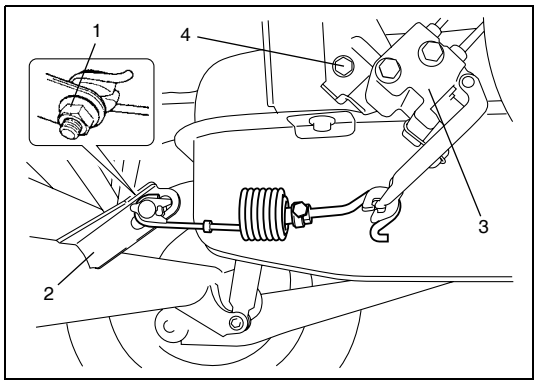

4) Remove nut (1) and detach spring end from rear axle (2).
5) Remove LSPV assembly (3) with bracket (4) from vehicle body.

INSTALLATION

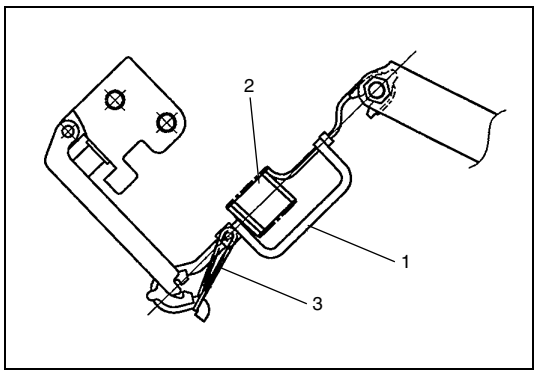

NOTE:

New LSPV assembly is supplied with held in specified spring length with adjusting block (1).
Do not remove rubber band (3) and adjusting block until spring (2) installation position is adjusted.

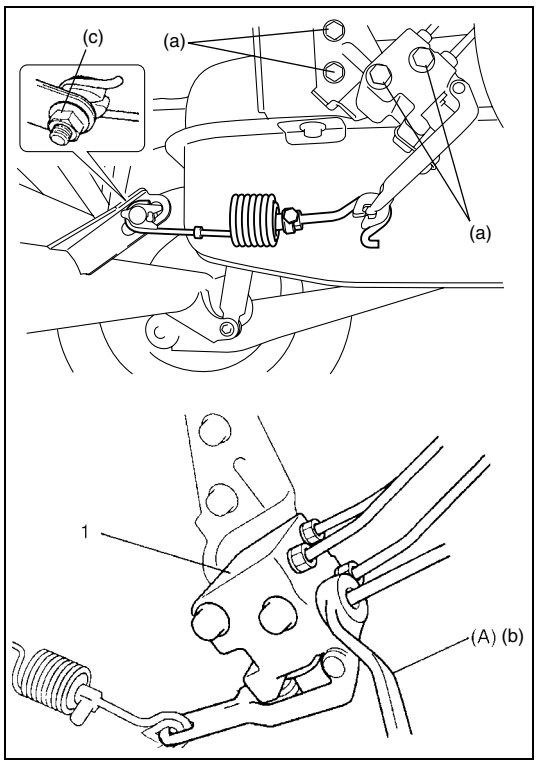

1) Install LSPV assembly (1) with bracket to vehicle body.
2) Torque each bolt and nut to specification as indicated respectively in figure.

Special tool
(A): 09950-78230 (10 x 11 mm)

Tightening torque
LSPV bracket bolt (a): 26 N·m (2.6 kg-m, 19.0 lb-ft)
Brake flare nut (b): 16 N·m (1.6 kg-m, 11.5 lb-ft)
LSPV spring end nut (c): 20 N·m (2.0 kg-m, 14.5 lb-ft)

3) Fill reservoir with specified fluid and bleed air from brake system.

4) Check or adjust spring installation position.
For used LSPV assembly, check that it is installed properly referring to the following “LSPV (Load Sensing Proportioning Valve) Inspection and Adjustment”.
For new LSPV assembly, adjust spring installation position as follows.

a) Confirm the following before adjustment.
- Fuel level meter indicates around “E” (Empty). (Fuel tank holds about 5 liters.)
- Vehicle is equipped with spare tire, tools, jack and jack handle.
- Vehicle is free from any other load.
- Vehicle is placed on level floor.

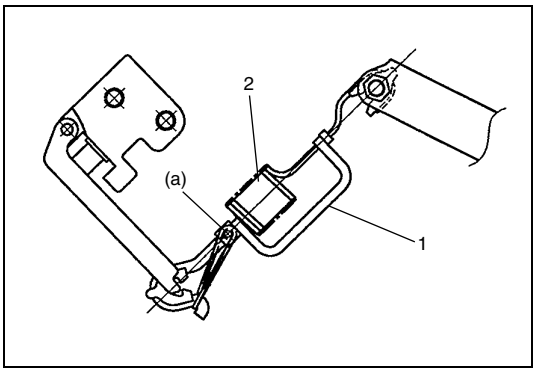

b) Tighten spring bracket bolt to specified torque.

Tightening torque
LSPV spring bracket bolt (a): 9 N·m (0.9 kg-m, 6.5 lb-ft)

c) Remove adjusting block (1) from spring (2).
d) Confirm fluid pressure referring to “Brake Fluid Pressure Test (if equipped with LSPV)” in Section 5.

LSPV (Load Sensing Proportioning Valve) Inspection and Adjustment

1) Confirm the following before inspection and adjustment.
- Fuel tank is filled with fuel fully.
- Vehicle is equipped with spare tire, tools, jack and jack handle.
- Vehicle is free from any other load.
- Vehicle is placed on level floor.

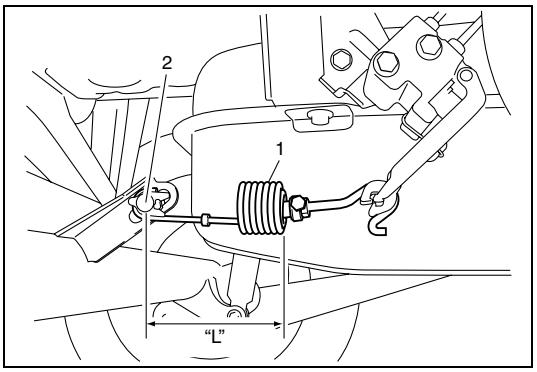

2) Check spring length between spring end (1) and spring bolt center (2).
If it is out of specification, adjust it as follows.

LSPV spring length
“L”: About 99.3 mm (3.9 in.)

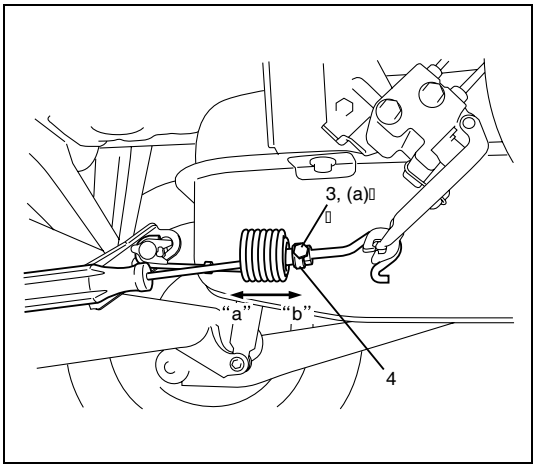

3) Loosen spring bracket bolt (3) and stretch spring to specified length by pushing spring bracket (4) with a driver or the like. Make sure that this adjustment does not cause any play between bracket (4) and spring (looseness in “a” to “b” direction as indicated in figure).
4) At that position in step 3), tighten spring bracket bolt to specified torque.

Tightening torque
LSPV spring bracket bolt (a): 9 N·m (0.9 kg-m, 6.5 lb-ft)

5) Confirm fluid pressure referring to “Brake Fluid Pressure Test (if equipped with LSPV)” in Section 5.

Brake Pedal and Brake Pedal Bracket Components Location

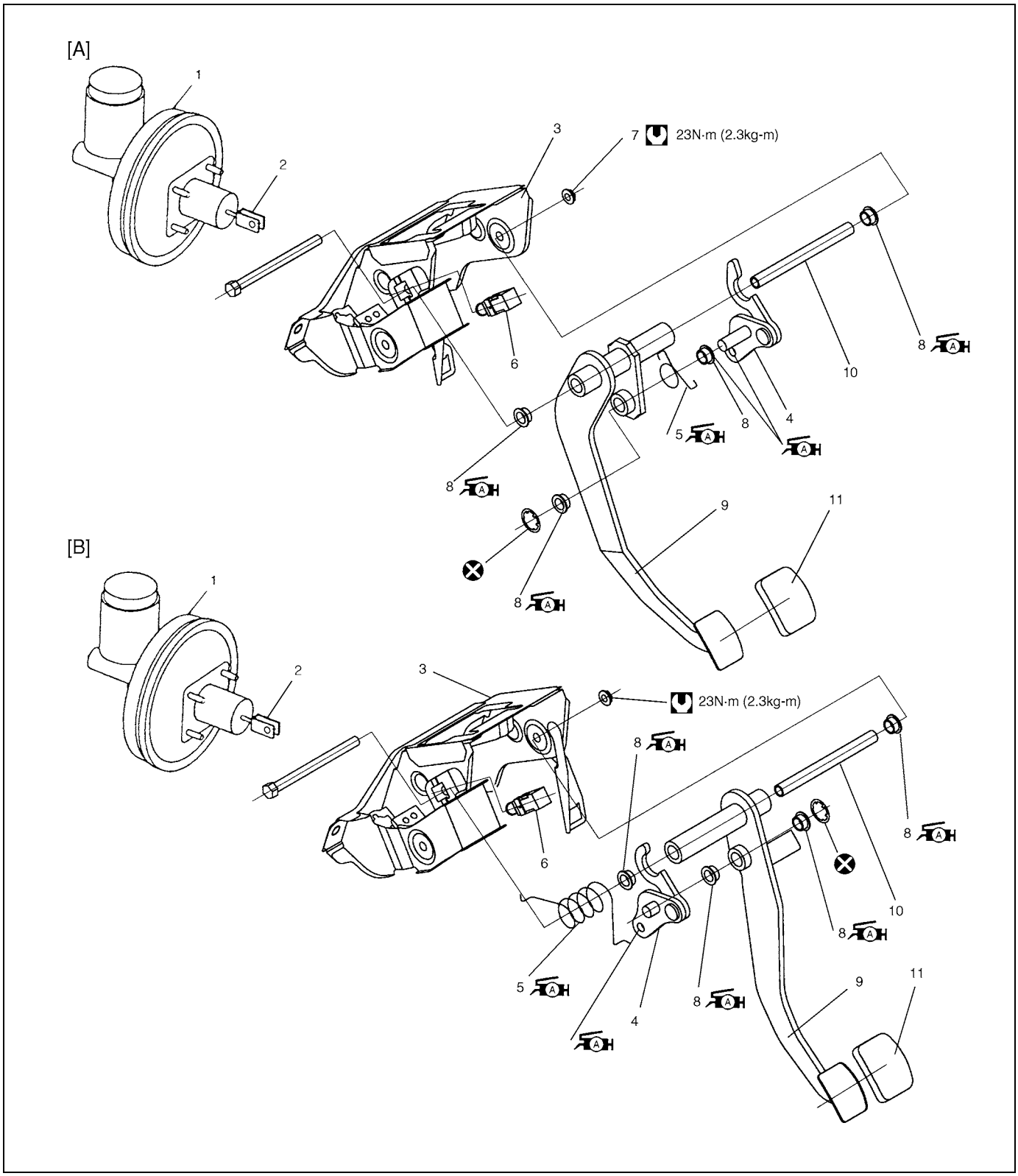

1. Brake booster assembly	5. Spring	9. Brake pedal	[A]: Left-hand steering vehicle
2. Push rod clevis	6. Stop light switch	10. Pedal shaft spacer: Apply SUZUKI SUPER GREASE A 99000-25010 to outside surface of spacer.	[B]: Right-hand steering vehicle
3. Brake pedal bracket	7. Brake pedal lever nut	11. Pedal pad:	Tightening torque
4. Brake pedal lever	8. Pedal bush		Do not reuse

Brake Pedal and Brake Pedal Bracket Removal and installation

REMOVAL

1) Disconnect stop light switch coupler.
2) Disconnect push rod clevis from brake pedal.
3) Remove attaching nuts.
4) Remove brake pedal bracket with brake pedal.
5) Remove each parts, if necessary.

INSTALLATION

Reverse removal procedure for installation, noting the following.

- Tighten each nuts and screws to specified torque as indicated above figure.

Tightening torque
Brake pedal mounting nut: 23 N·m (2.3 kg-m, 17.0 lb-ft)

- After installing, check brake pedal play and perform brake test.

Stop (Brake) Lamp Switch Removal and Installation

REMOVAL

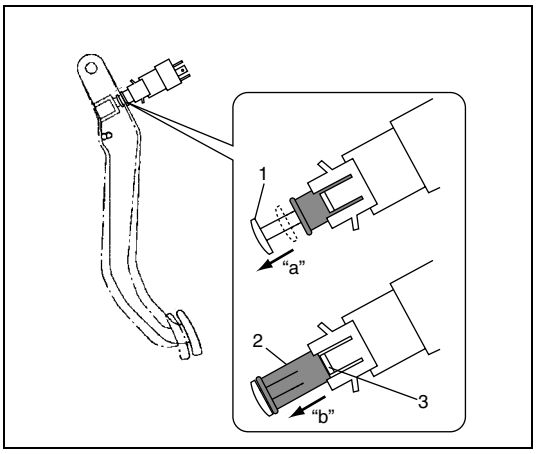

1) Disconnect stop lamp switch coupler.
2) Pull out switch slider (1) of stop lamp switch in the direction of arrow "a" in the illustration.
   Then, pull out adjuster (2) in the direction of arrow "b" in the illustration.
3) Remove stop lamp switch with pressing its pin (3) to inside.

INSTALLATION

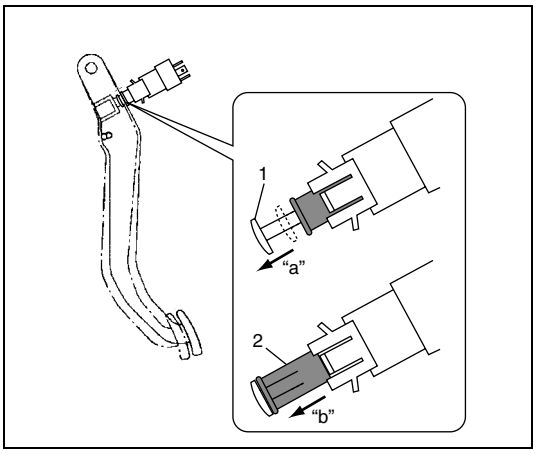

1) Pull out switch slider (1) of stop lamp switch in the direction of arrow "a" in the illustration.
   Then, pull out adjuster (2) in the direction of arrow "b" in the illustration.
2) Install stop lamp switch.
3) Adjustment of stop lamp switch is un necessary.
   When brake pedal is depressed, adjuster adjust the suitable distance automatically.

Tightening Torque Specifications

Fastening part	Tightening torque		
	N•m	kg-m	lb-ft
ABS hydraulic unit mounting bolt	26	2.6	18.8
Booster mounting nut	13	1.3	9.5
Brake pedal mounting nut	23	2.3	17.0
Brake pipe flare nut	16	1.6	11.5
Master cylinder cap (RH vehicle)	14	1.4	10.5
Clevis pin lock nut	19	1.9	14.0
LSPV bracket bolt	26	2.6	19.0
Master cylinder mounting nut	13	1.3	9.5
LSPV spring bracket bolt	9	0.9	6.5
LSPV spring end nut	20	2.0	14.5

Required Service Material

Material	Recommended SUZUKI product (Part Number)	Use
Brake fluid	DOT4 or SAE J1704	• To fill master cylinder reservoir. • To clean and apply to inner parts of caliper and wheel cylinder when they are disassembled.
Lithium grease	SUZUKI SUPER GREASE A (99000-25010)	• Clevis pin • Pedal shaft spacer

Special Tools

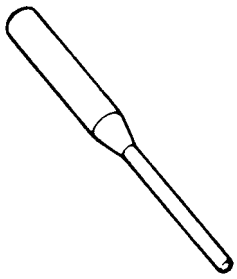 09922-85811 Connector pin remover	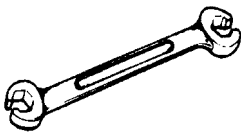 09950-78230 Flare nut wrench (10 – 11 mm)	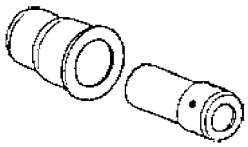 09951-18220 Secondary cup installer	 09952-46010 Master cylinder attachment
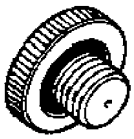 09952-26020 Master cylinder plug	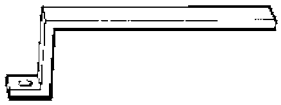 09952-16021 Booster piston rod adjuster		

SECTION 5B

FRONT BRAKE

NOTE:

All brake fasteners are important attaching parts in that they could affect the performance of vital parts and systems, and/or could result in major repair expense. They must be replaced with one of same part number or with an equivalent part if replacement becomes necessary. Do not use a replacement part of lesser quality or substitute design. Torque values must be used as specified during reassembly to assure proper retention of all parts. There is to be no welding as it may result in extensive damage and weakening of the metal.

CONTENTS

General Description 5B-2
- Front Brake Component Location 5B-2

Diagnosis 5B-3

Check and Adjustment 5B-3

On-Vehicle Service 5B-3
- Front Disc Brake Pad Removal and Installation 5B-3
- Front Disc Brake Pad Inspection 5B-5
- Front Brake Disc Inspection 5B-5
- Brake Caliper Carrier Inspection 5B-6
- Front Disc Brake Caliper Removal and Installation 5B-6
- Front Disc Brake Caliper Boot Inspection 5B-8
- Front Disc Brake Caliper Disassembly and Assembly 5B-8
- Front Brake Disc Removal and Installation 5B-11

Tightening Torque Specification 5B-12

Required Service Material 5B-12

Special Tool 5B-12

General Description

Front Brake Component Location

CAUTION:

Lubricate parts as specified. Do not use lubricated shop air on brake parts as damage to rubber components may result. If any component is removed or line disconnected, bleed the brake system. Replace pads in axle sets only. The torque values specified are for dry, unlubricated fasteners.

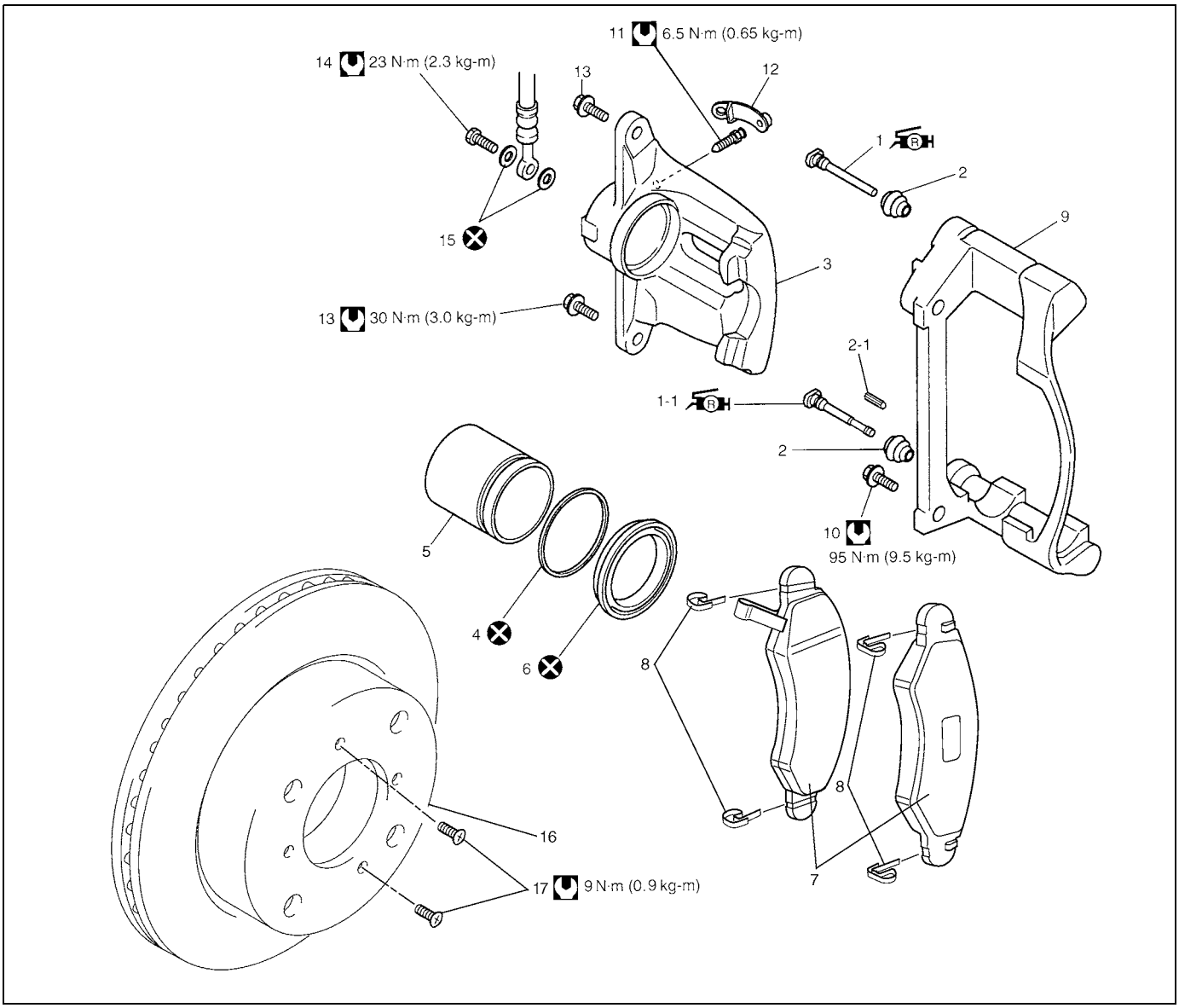

R	1. Guiding pin	6. Piston boot	13. Caliper pin bolt
R	1-1. Locking pin: Apply specified rubber grease to guiding and locking pins surfaces for smooth movement.	7. Disc brake pad	14. Flexible hose bolt
	2. Pin boot	8. Pad spring	15. Blank
	2-1. Rubber tube	9. Brake caliper carrier	16. Brake disk
	3. Disc brake caliper (disc brake cylinder)	10. Caliper bolt	17. Brake disk screw
	4. Piston seal	11. Bleeder plug	Tightening torque
	5. Disc brake piston	12. Bleeder plug cap	Do not reuse

Diagnosis

Refer to Section 5 (BRAKES).

Check and Adjustment

Refer to Section 5 (BRAKES).

On-Vehicle Service

Front Disc Brake Pad Removal and Installation

REMOVAL

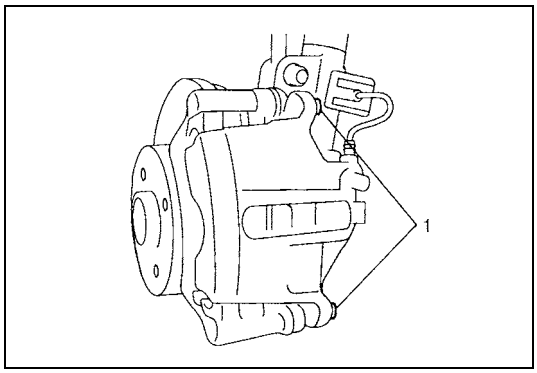

1) Hoist vehicle and remove wheel referring to “Wheel Removal and Installation” in Section 3F.
2) Remove caliper pin bolts (1).

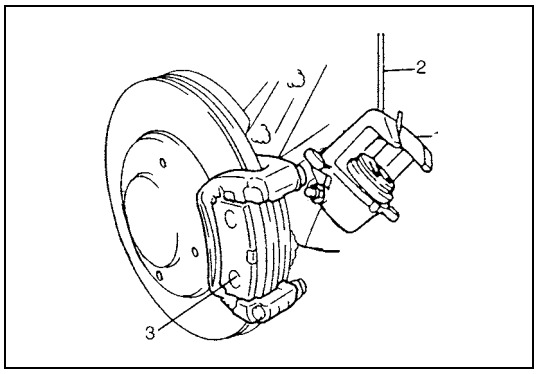

3) Remove E-ring from strut and then remove caliper (1) from caliper carrier.

NOTE:

Hang removed caliper with a wire hook (2) or the like so as to prevent brake hose from bending and twisting excessively or being pulled. Don’t operate brake pedal with pads removed.

4) Remove pads (3).

INSTALLATION

CAUTION:
Observe CAUTION at the beginning of "Front Brake Component Location" in this section.

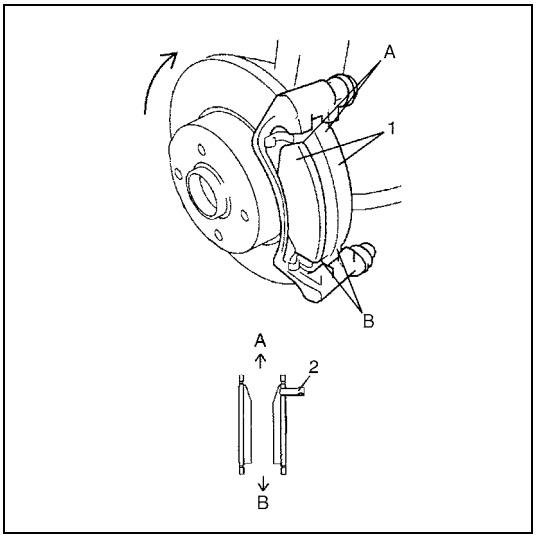

1) Install pads (1).

NOTE:

- **When installing brake pad, make sure that its tapered side is positioned upward (A) as shown in figure.**
- **Install pad with sensor (2) to vehicle center side on right wheel brake.**

A:	Upper side
B:	Lower side

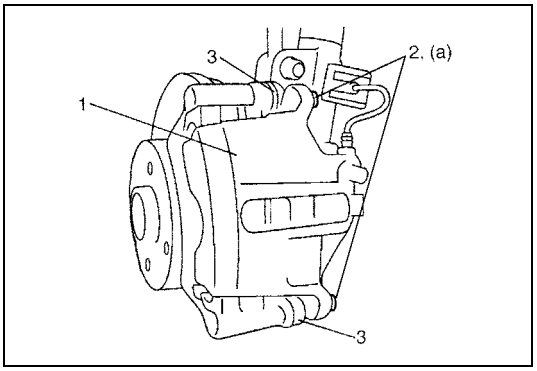

2) Install caliper (1) and tighten caliper pin bolts (2) to specification.

Tightening torque
Caliper pin bolt (a): 30 N·m (3.0 kg-m, 22.0 lb-ft)

NOTE:

Make sure that boots (3) are fit into groove securely.

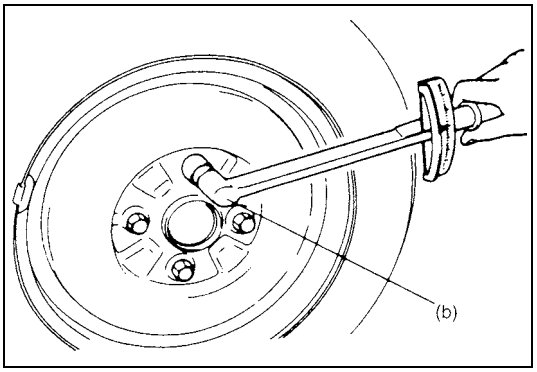

3) Tighten front wheel bolts to specification.

Tightening torque
Wheel bolt (b): 95 N·m (9.5 kg-m, 69.0 lb-ft)

4) Upon completion of installation, perform brake test.

Front Disc Brake Pad Inspection

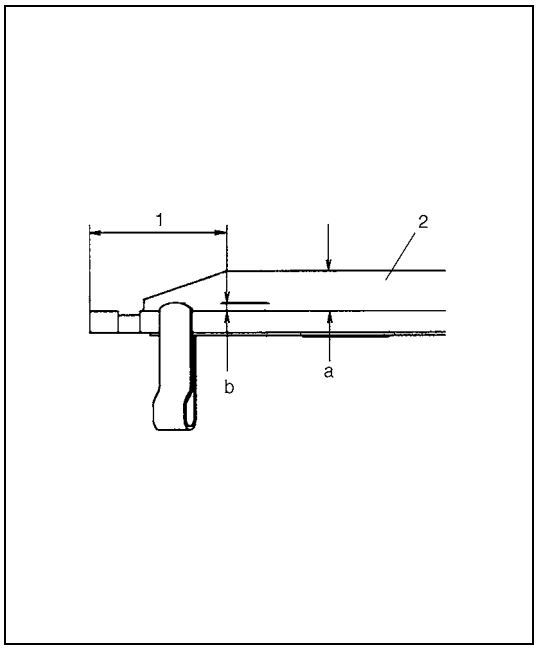

Check pad lining (2) for wear. If one of brake pad is worn to service limit, all pads must be replaced at the same time.

CAUTION:

Never polish pad lining with sandpaper. If lining is polished with sandpaper, hard particles of sandpaper will be deposited in lining and may damage disc. When pad lining requires correction, replace it with a new one.

Pad (lining) thickness
Standard (a): 9.5 mm (0.374 in.)
Service limit (b): 2.0 mm (0.078 in.)

1. 35 mm (1.38 in.)

NOTE:

When pads are removed, visually inspect caliper for brake fluid leak. Correct leaky point, if any.

Front Brake Disc Inspection

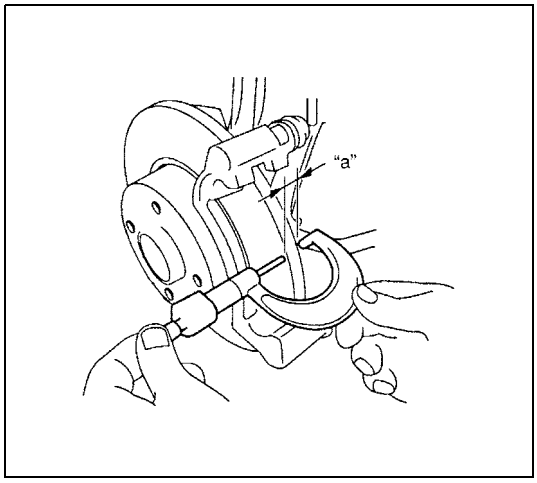

1) Remove brake caliper, referring to "Front Disc Brake Pad Removal and Installation" in this section.
2) Check disc surface for scratches in wearing parts. Scratches on disc surface noticed at the time of specified inspection or replacement are normal and disc is not defective unless they are serious.
   But when there are deep scratches or scratches all over disc surface, replace it. When only one side is scratched, polish and correct that side.

Disc thickness "a"
Standard: 17.0 mm (0.67 in.)
Service limit: 15.0 mm (0.59 in.)

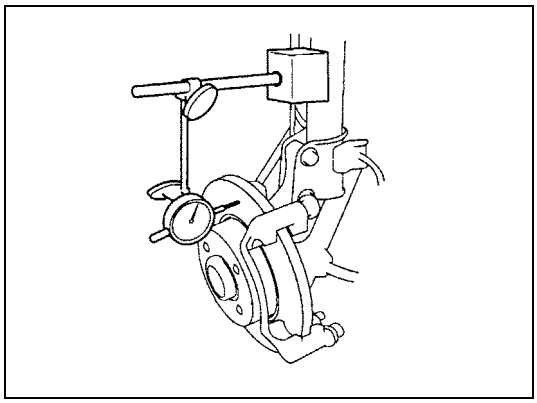

3) Hold the disc securely against the hub, then mount a dial indicator as shown and measure the run-out at 20 mm (0.79 in.) from the outer edge of the disc.

Limit on disc deflection: 0.15 mm (0.006 in.)

NOTE:

Check front wheel bearing for looseness before measurement.

Brake Caliper Carrier Inspection

Remove brake caliper, referring to “Front Disc Brake Pad Removal and Installation”

Cylinder Slide Guiding and Locking Pins

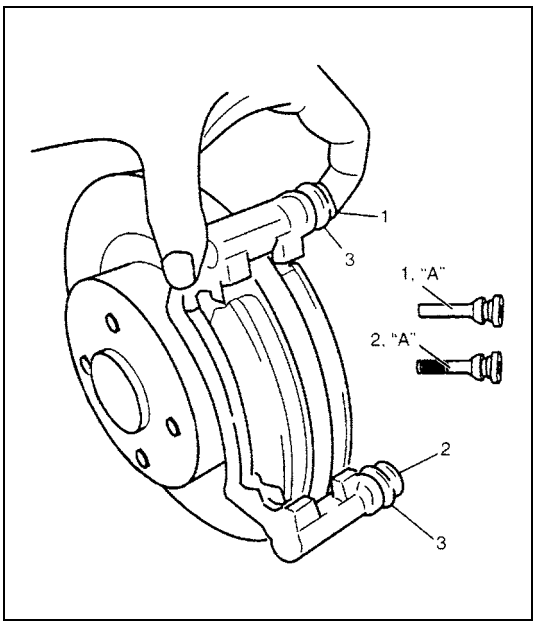

Check guiding pin (1) and locking pin (2) for smooth movement as shown.
If it is found faulty, correct or replace. Apply rubber grease to guiding and locking pins outer surface.
Rubber grease should be the on whose viscosity is less affected by such low temperature a –40°C (–40°F).

“A”: Rubber grease

Locking pin (2) has grooves and rubber tube but guiding pin (1) has no groove. Install guiding pin (1) into pin hole of carrier upper side.

Dust Boot

Check boot (3) for breakage, crack and damage. If defective, replace.

Front Disc Brake Caliper Removal and Installation

REMOVAL

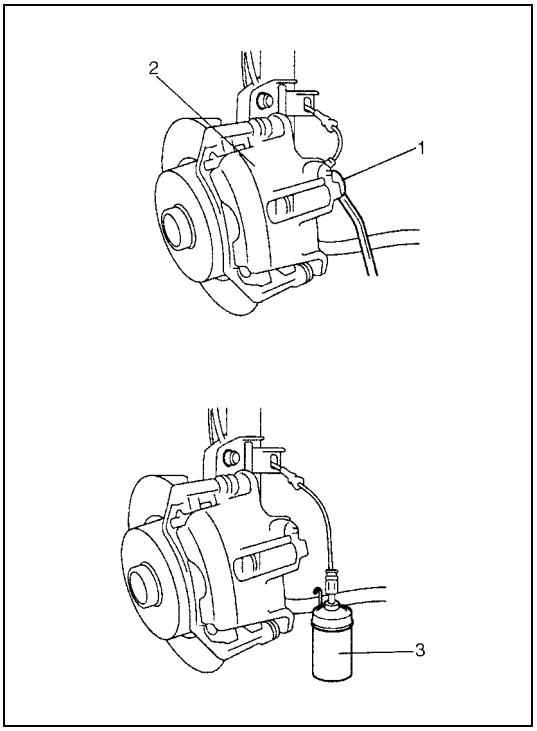

1) Hoist vehicle and remove wheel referring to “Wheel Removal and Installation” in Section 3F.
2) Remove brake flexible hose bolt (1) from caliper (2). As this will allow fluid to flow out of hose, have a container (3) ready before-hand.

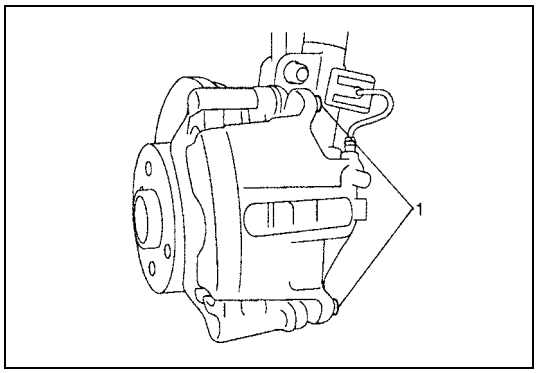

3) Remove caliper pin bolts (1).
4) Remove caliper.

INSTALLATION

CAUTION:
Observe CAUTION at the beginning of "Front Brake Component Location" in this section.

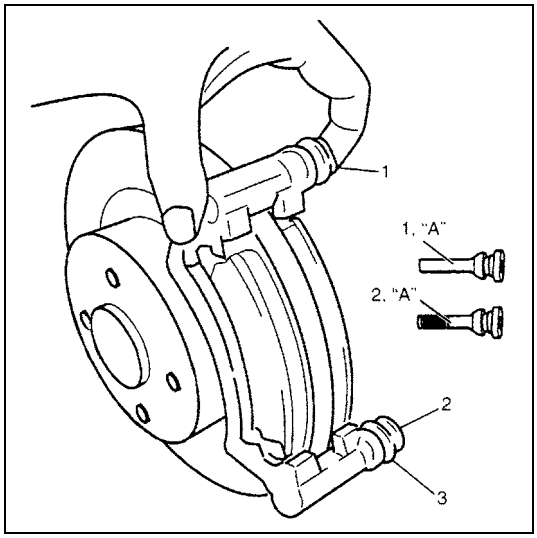

Before installing caliper (cylinder body) to carrier, check to ensure that guiding pin (1) and locking pin (2) inserted in each caliper carrier hole can be moved smoothly in thrust direction.

NOTE:
Use rubber grease whose viscosity varies very little even at –40 °C (–40 °F) if applied.

"A": Rubber grease

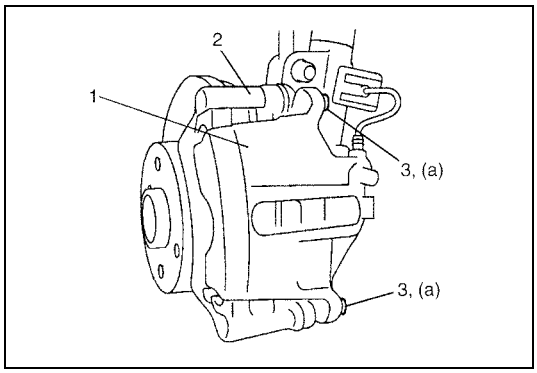

1) Install caliper (1) to caliper carrier (2).
2) Tighten caliper pin bolts (3) to specifications.

Tightening torque
Caliper pin bolt (a): 30 N·m (3.0 kg-m, 22.0 lb-ft)

NOTE:
Make sure that boots are fit into groove securely.

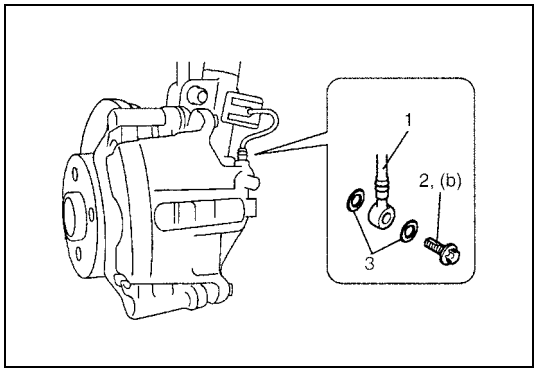

3) Install brake flexible hose (1) and new gaskets (3) as shown and tighten hose bolt (2) to specification.

Tightening torque
Flexible hose bolt (b): 23 N·m (2.3 kg-m, 17.0 lb-ft)

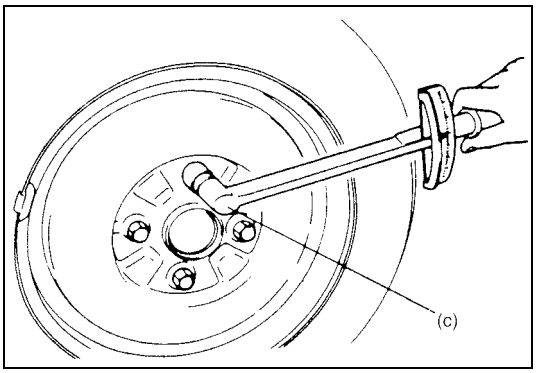

4) Tighten wheel bolts to specification.

Tightening torque
Wheel bolt (c): 95 N·m (9.5 kg-m, 69.0 lb-ft)

5) After completing installation, fill reservoir with brake fluid and bleed brake system. Perform brake test and check each installed part for oil leakage.

Front Disc Brake Caliper Boot Inspection

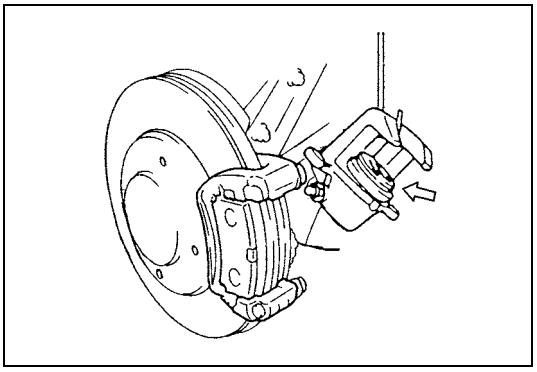

Check boot for breakage, crack, damage and leakage. If defective, replace piston seal and piston boot.

Front Disc Brake Caliper Disassembly and Assembly

DISASSEMBLY

WARNING:
Do not apply too much highly compressed air which will cause piston to jump out of cylinder. It should be taken out gradually with moderately compressed air. Do not place your fingers in front of piston when using compressed air.

Before disassembly, clean all around caliper with brake fluid.

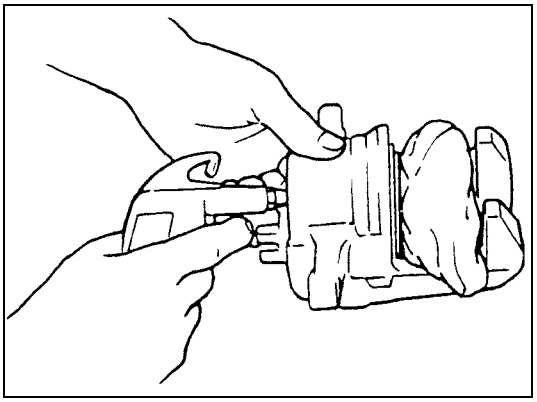

1) Blow compressed air into cylinder through bolt hole where flexible hose was fitted.
With this air pressure, piston can be pushed out of cylinder.

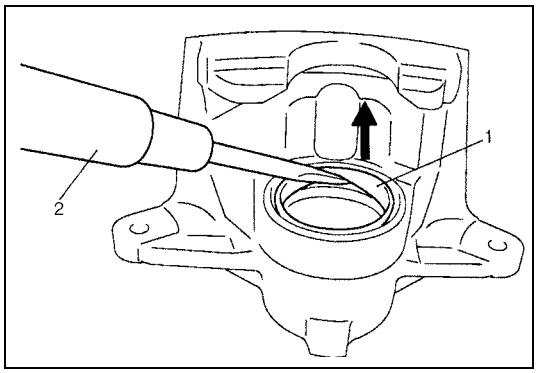

2) Remove piston boot (1) prying it with a metal tool (2) (no sharp edge).

CAUTION:
Be careful not to damage inside (bore side) of cylinder.

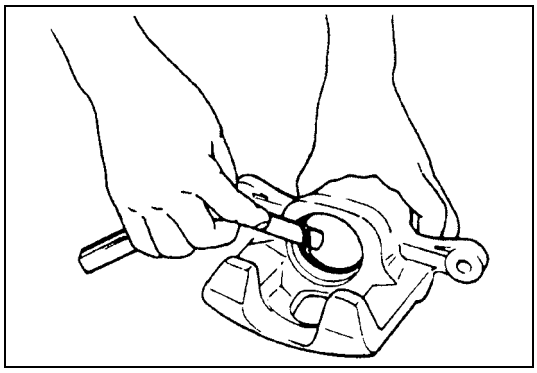

3) Remove piston seal using a thin blade like a thickness gauge, etc.

CAUTION:
Be careful not to damage inside (bore side) of cylinder.

ASSEMBLY

Reassemble front brake in reverse order of disassembly, noting the following points.

CAUTION:
- **Wash each part cleanly before installation in the same fluid as the one used in master cylinder reservoir.**
- **Never use other fluid or thinner.**
- **Before installing piston and piston seal to cylinder, apply fluid to them.**
- **After reassembling brake lines, bleed air from them.**

Piston Seal, Piston and Boot

NOTE:

Piston seal is used to seal piston and cylinder and to adjust clearance between pad and disc. Replace with a new one at every overhaul.

1) Fit piston seal into groove in cylinder taking care not to twist it.

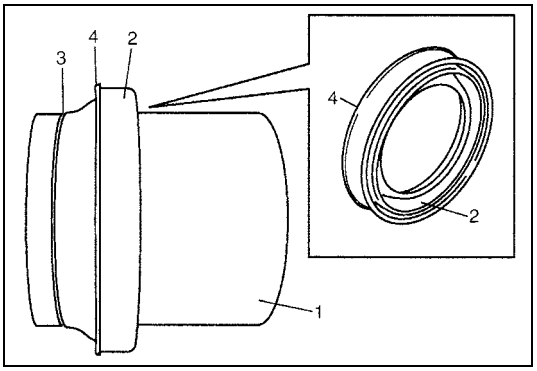

2) Fit new boot (2) in groove (3) of piston (1) facing stepped end (4) of boot to groove side.

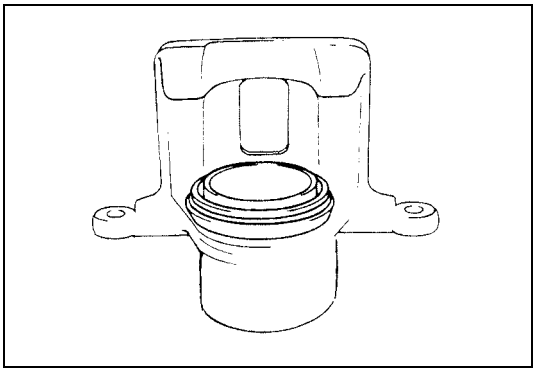

3) Insert piston into cylinder by hand.

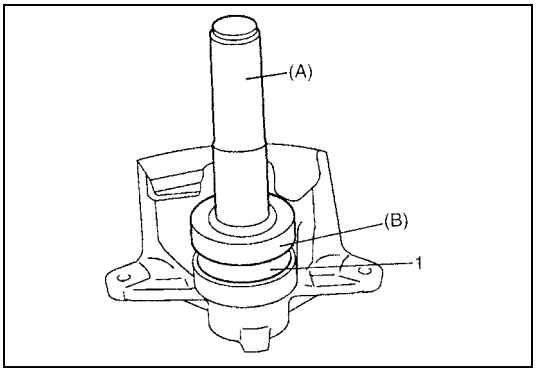

4) Drive in boot (1) into cylinder till its end surface becomes flush with cylinder end surface using special tools.

Special tool
(A): 09924-74510
(B): 09944-88210

Front Brake Disc Removal and Installation

CAUTION:
During removal, be careful not to damage brake flexible hose and not to depress brake pedal.

REMOVAL

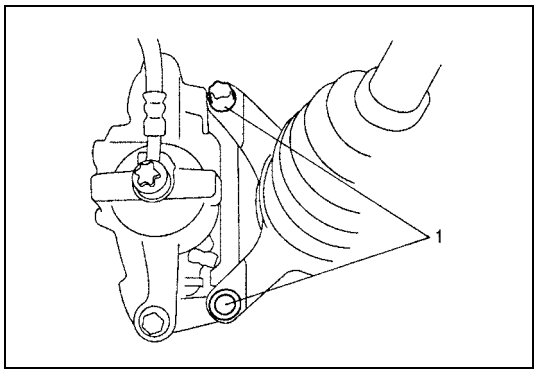

1) Hoist vehicle and remove wheel referring to “Wheel Removal and Installation” in Section 3F.
2) Remove caliper assembly by loosening carrier bolts (1).
3) Remove brake disc securing screws.

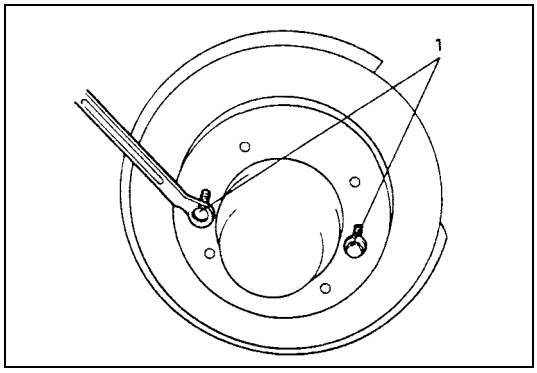

4) Remove disc by using 8 mm bolts (1) (2 pcs).

INSTALLATION

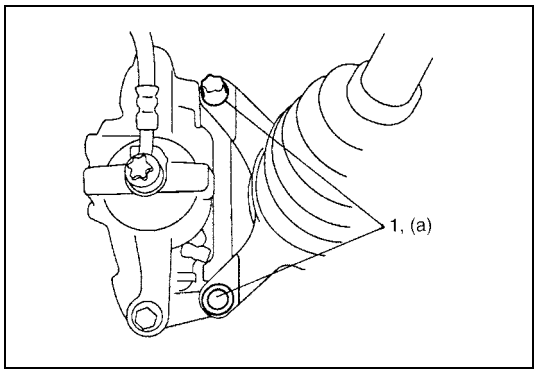

1) Install disc to wheel hub and tighten disc securing screws.
2) Install caliper assembly to steering knuckle.
3) Tighten caliper carrier bolts (1) to specification.

Tightening torque
Caliper carrier bolt (a): 95 N·m (9.5 kg-m, 69.0 lb-ft)

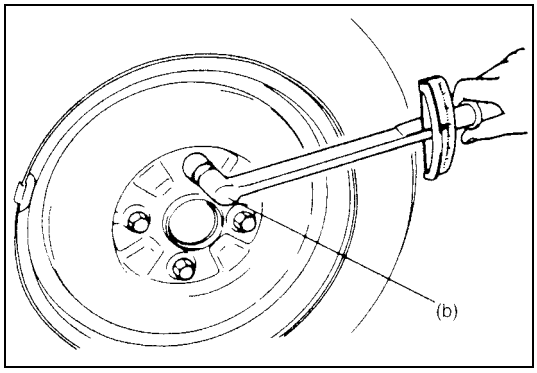

4) Tighten front wheel bolts to specifications.

Tightening torque
Wheel bolt (b): 95 N·m (9.5 kg-m, 69.0 lb-ft)

5) Upon completion of installation, perform brake test.

Tightening Torque Specification

Fastening part	Tightening torque		
	N•m	kg-m	lb-ft
Caliper pin bolt	30.0	3.0	22.0
Wheel bolt	95.0	9.5	69.0
Flexible hose bolt	23.0	2.3	17.0
Caliper carrier bolt	95.0	9.5	69.0
Brake disc securing screw	9.0	0.9	6.5

Required Service Material

Material	Recommended SUZUKI product (Part Number)	Use
Brake fluid	DOT4 or SEA J1704	• To fill master cylinder reservoir • To clean and apply to inner parts of caliper and wheel cylinder when they are disassembled
Rubber grease	Molykoto G807 or equivalent	To caliper guiding and locking pins

Special Tool

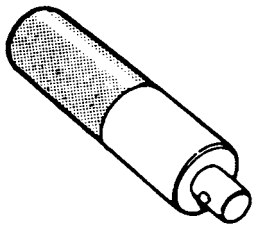	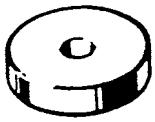
09924-74510 Bearing installer	09944-88210 Bearing installer

SECTION 5C

PARKING AND REAR BRAKE

WARNING:

For vehicles equipped with Supplemental Restraint (Air Bag) System:

- **Service on and around the air bag system components or wiring must be performed only by an authorized SUZUKI dealer. Refer to "System Components and Wiring Location View" under "General Description" in air bag system section in order to confirm whether you are performing service on or near the air bag system components or wiring. Please observe all WARNINGS and "Service Precautions" under "On-Vehicle Service" in air bag system section before performing service on or around the air bag system components or wiring. Failure to follow WARNINGS could result in unintentional activation of the system or could render the system inoperative. Either of these two conditions may result in severe injury.**
- **Technical service work must be started at least 90 seconds after the ignition switch is turned to the "LOCK" position and the negative cable is disconnected from the battery. Otherwise, the system may be activated by reserve energy in the Sensing and Diagnostic Module (SDM).**

NOTE:

All brake fasteners are important attaching parts in that they could affect the performance of vital parts and systems, and/or could result in major repair expense. They must be replaced with one of same part number or with an equivalent part if replacement becomes necessary. Do not use a replacement part of lesser quality or substitute design. Torque values must be used as specified during reassembly to assure proper retention of all parts. There is to be no welding as it may result in extensive damage and weakening of the metal.

CONTENTS

Diagnosis 5C-2
Check and Adjustment 5C-2
On-Vehicle Service 5C-3
Brake Drum Component Location 5C-3
Brake Drum Removal and Installation (for 2WD Model) 5C-4
Brake Drum Removal and Installation (for 4WD Model) 5C-6
Drum Brake Component Parts Inspection 5C-8
ABS Sensor Ring Replacement (for 2WD Model) 5C-11
ABS Sensor Ring Replacement (for 4WD Model) 5C-11
Brake Shoe Removal and Installation 5C-12
Wheel Cylinder Removal and Installation 5C-14
Wheel Cylinder Inspection 5C-15
Brake Back Plate Removal and Installation (for 2WD Model) 5C-15
Brake Back Plate Removal and Installation (for 4WD Model) 5C-17
Parking Brake Cable Component Location 5C-18
Parking Brake Cable Removal and Installation 5C-19
Parking Brake Lever Removal and Installation 5C-20
Required Service Materials 5C-21
Special Tools 5C-22

Diagnosis

Refer to Section 5 (Brakes).

Check and Adjustment

Refer to Section 5 (Brakes).

On-Vehicle Service

Brake Drum Component Location

CAUTION:

- **Replace all components included in repair kits to service this drum brake. Lubricate parts as specified.**
- **If any hydraulic component is removed or brake line disconnected, bleed the brake system.**
- **The torque values specified are for dry, unlubricated fasteners.**

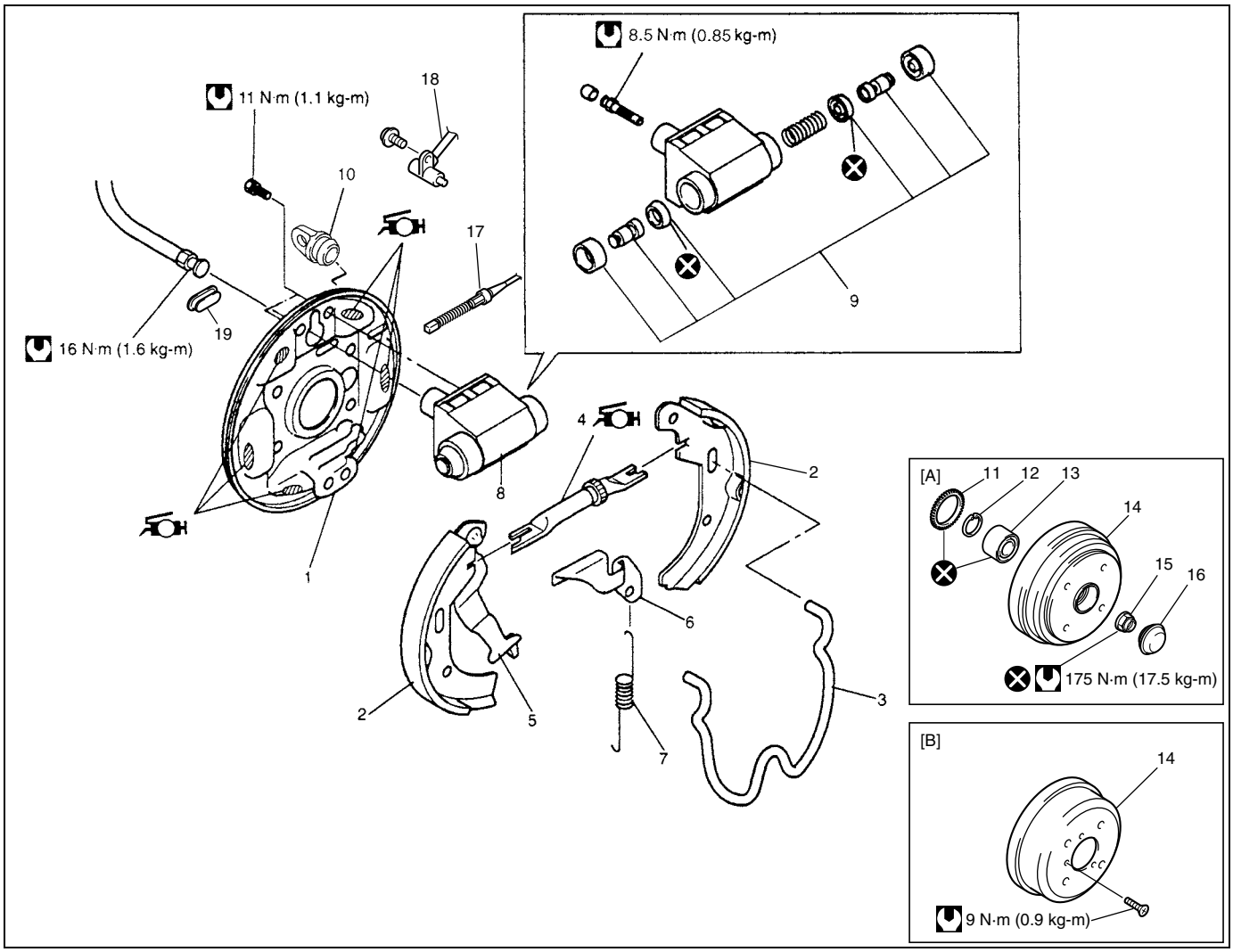

⚙	1. Brake back plate: Clean back plate and apply thin coat of Bentonite base brake grease (anti-squeal agent) to six surfaces on which shoe rims rest.	9. Piston assembly	17. Parking brake cable
	2. Brake shoe	10. Cover	18. Wheel speed sensor ***if equipped with ABS
	3. Retractor spring	11. Sensor ring ***if equipped with ABS	19. Adjuster cover
⚙	4. Brake adjuster (strut): Apply Bentonite base brake grease between actuator and shoe rim and at actuator pivot points.	12. Circlip	[A] 2WD model
	5. Parking brake shoe lever	13. Wheel bearing	[B] 4WD model
	6. Adjuster actuator	14. Brake drum	Tightening torque
	7. Adjuster spring	15. Spindle nut	Do not reuse
	8. Wheel cylinder	16. Spindle cap	

Brake Drum Removal and Installation (for 2WD Model)

REMOVAL

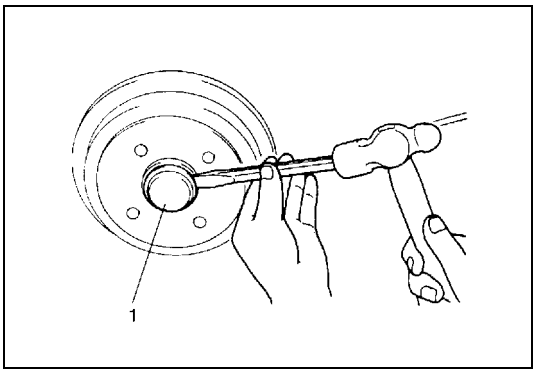

1) Hoist vehicle and remove wheel referring to “Wheel Removal and Installation” in Section 3F.
2) Remove spindle cap (1) as shown (by hammering lightly at 3 locations around it so as not to deform or cause damage to seating part of cap).

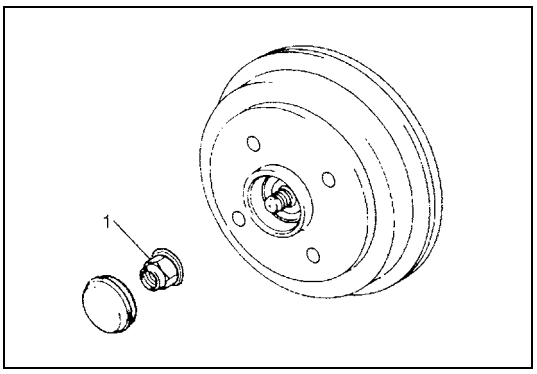

3) Uncaulk spindle nut, remove spindle nut (1).

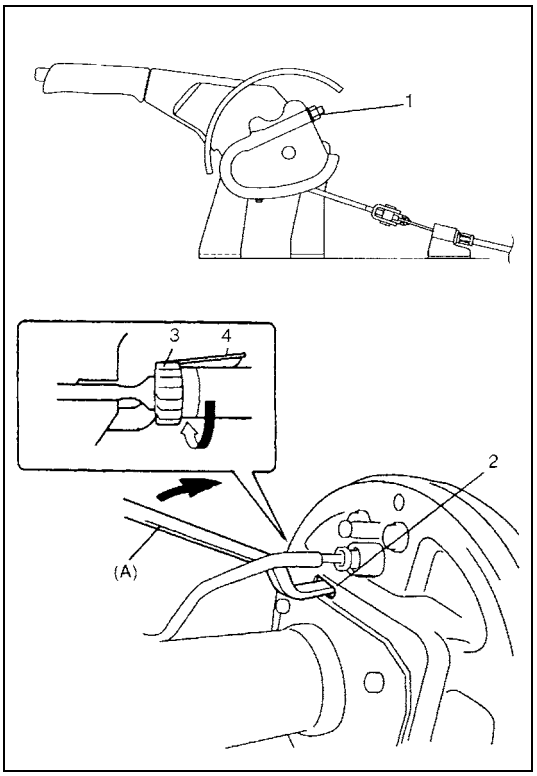

4) Release parking brake lever.
5) Remove brake drum.
   If brake drum can not be removed easily, increase clearance between brake shoes and drum as follows.
   a) Remove console box cap and loosen parking brake cable adjusting nut (1).
   b) Remove adjuster cover on back plate.
   c) Insert special tool through hole (2) in back plate.

   Special tool
   (A): Snap-on Part No. B3404B or equivalent

   d) Pressing adjuster actuator (4) to the outside of the vehicle, turn adjuster (3) with special tool (A) in such direction as indicated in figure so as to obtain larger clearance.

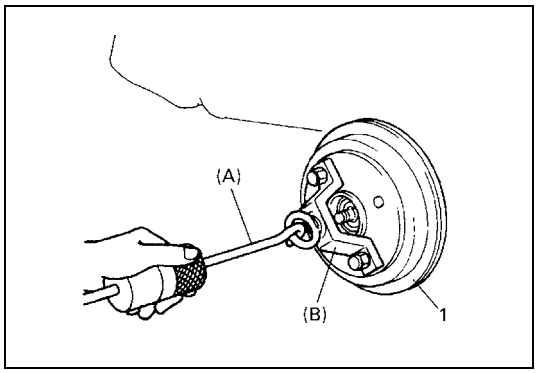

e) Pull brake drum (1) off by hand.
If it is hard to remove, use special tools.

Special tool
(A): 09942-15111
(B): 09943-17912

NOTE:

When drum is removed, visually inspect wheel cylinder for brake fluid leakage. Correct leaky point if any.

INSTALLATION

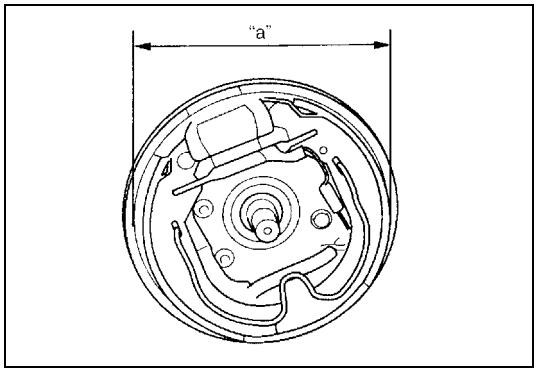

1) Before installing brake drum, check outer diameter "a" of brake shoes. If it is not within value as specified below, adjust it to specification by turning adjuster.

Brake shoes outer diameter "a"	=	Measured brake drum inside diameter	–	0.5 to 1.0 mm (0.02 to 0.04 in.)

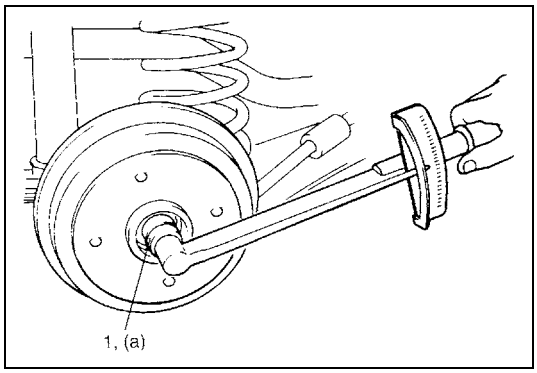

2) Install brake drum after making sure that inside of brake drum and brake shoes are free from dirt and oil.
3) Install new spindle nut (1).
4) Tighten spindle nut (1) to specified torque.

Tightening torque
Spindle nut (a): 175 N·m (17.5 kg-m, 126.5 lb-ft)

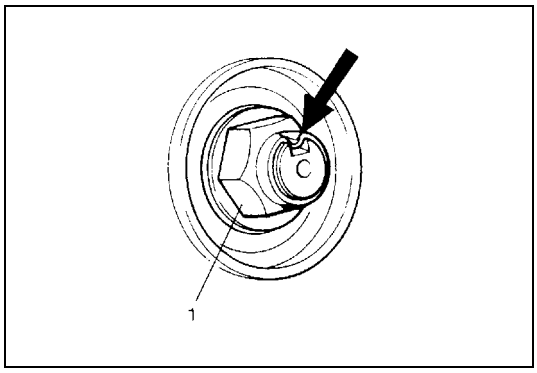

5) Calk spindle nut (1).
6) Install spindle cap.

NOTE:

- **When installing spindle cap, hammer lightly several locations on the collar of cap until collar comes closely into contact with brake drum.**
- **If fitting part of cap is deformed or damaged or if it is fitted loosely, replace with new one.**

7) Upon completion of all jobs, depress brake pedal with about 300 N (30 kg, 66 lbs) load at least 15 – 20 times until adjuster actuator clicking sound from drum brake can not be heard so as to obtain proper drum-to-shoe clearance.
Adjust parking brake cable. For adjustment, refer to "Parking Brake Inspection and Adjustment" in Section 5.
8) Install console box cap if removed.

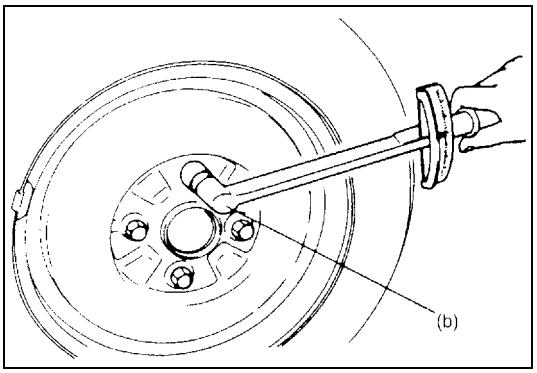

9) Install wheel and tighten wheel bolts to specified torque.

Tightening torque
Wheel bolt (b): 95 N·m (9.5 kg-m, 69.0 lb-ft)

10) Check to ensure that brake drum is free from dragging and proper braking is obtained. Then remove vehicle from hoist and perform brake test (foot brake and parking brake).

Brake Drum Removal and Installation (for 4WD Model)

REMOVAL

1) Hoist vehicle and remove wheel referring to “Wheel Removal and Installation” in Section 3F.

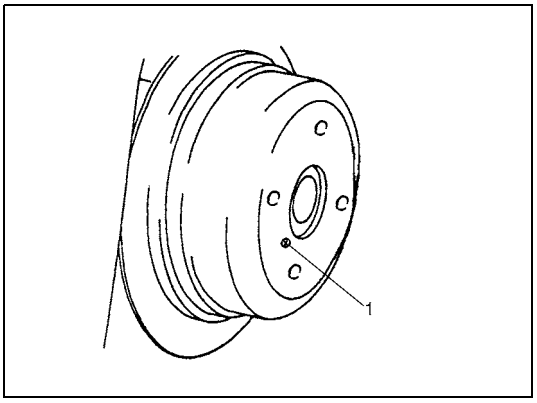

2) Remove brake drum screw (1) and release parking brake lever.

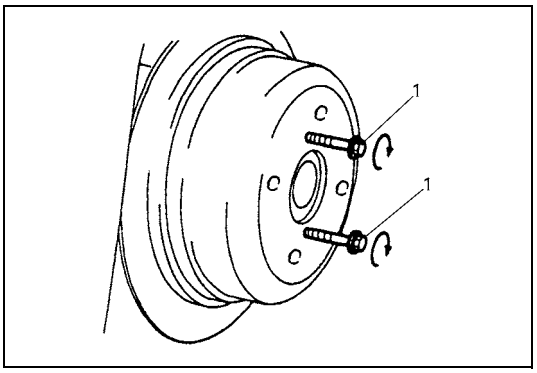

3) Remove brake drum.
If brake drum can not be removed easily, increase clearance between brake shoes and drum, referring to step a) – d) in “Brake Drum Removal and Installation (for 2WD Model)”.
a) Pull brake drum off by using 8 mm bolts (1).

NOTE:
When drum is removed, visually inspect wheel cylinder for brake fluid leakage. Correct leaky point, if any.

INSTALLATION

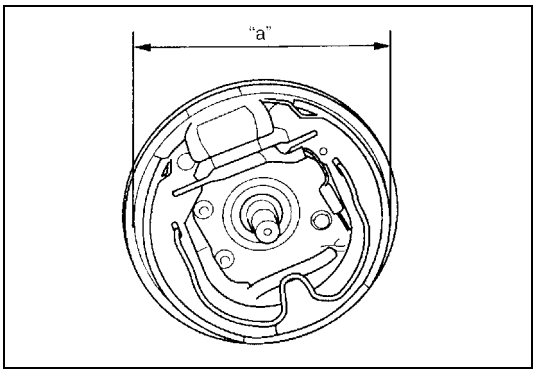

1) Before installing brake drum, check outer diameter “a” of brake shoes. If it is not within value as specified below, adjust it to specification by turning adjuster.

Brake shoes outer diameter “a”	=	Measured brake drum inside diameter	–	0.5 to 1.0 mm (0.02 to 0.04 in.)

2) Install brake drum after making sure that inside of brake drum and brake shoes are free from dirt and oil.

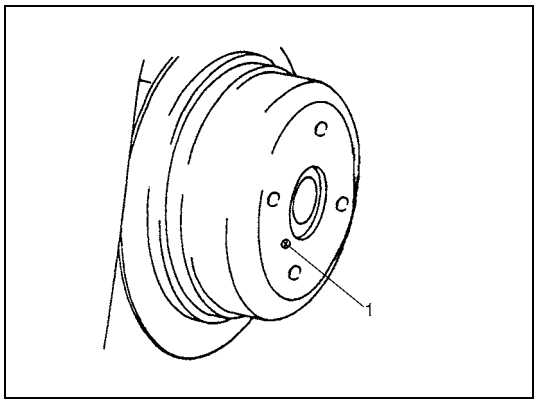

3) Tighten screw (1) to specified torque.

Tightening torque
Brake drum screw (a): 9 N·m (0.9 kg-m, 6.5 lb-ft)

4) Upon completion of all jobs, depress brake pedal with about 300 N (30 kg, 66 lbs) load at least 15 – 20 times until adjuster actuator clicking sound from drum brake can not be heard so as to obtain proper drum-to-shoe clearance.
   Adjust parking brake cable. For adjustment refer to “Parking Brake Inspection and Adjustment” in Section 5.
5) Install console box cap if removed.

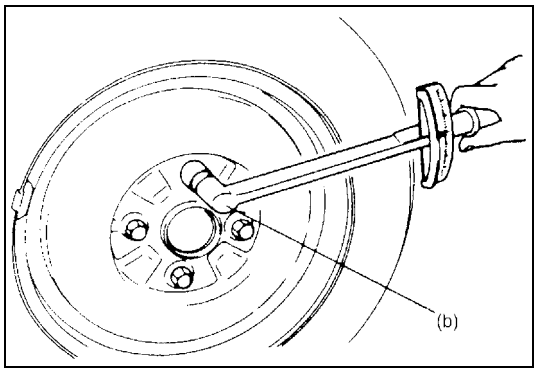

6) Install wheel and tighten wheel bolts to specified torque.

Tightening torque
Wheel bolt (b): 95 N·m (9.5 kg-m, 69.0 lb-ft)

7) Check to ensure that brake drum is free from dragging and proper braking is obtained. Then remove vehicle from hoist and perform brake test (foot brake and parking brake).

Drum Brake Component Parts Inspection

BRAKE DRUM

Inside diameter

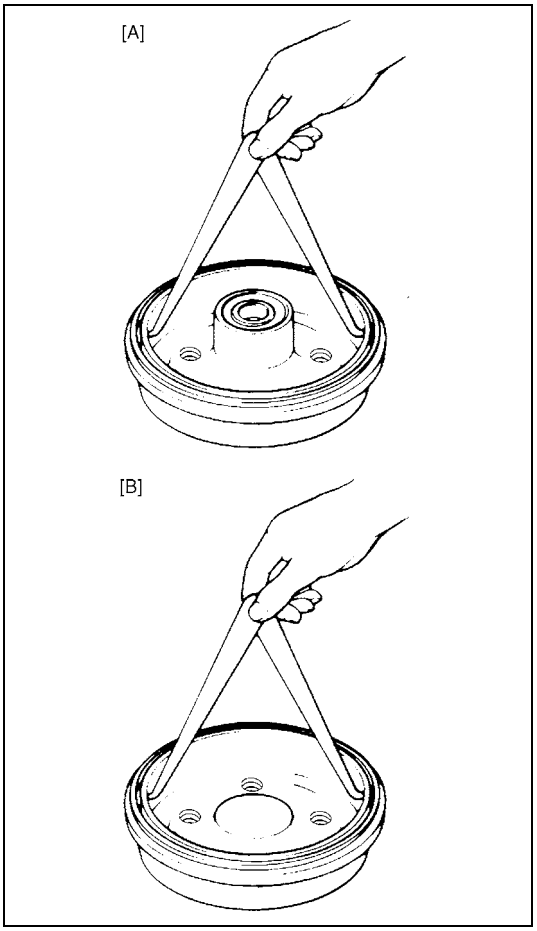

Inspect drum for cleanliness. Check wear of its braking surface by measuring its inside diameter.

Brake drum inside diameter
Standard: 200 mm (7.87 in.)
Service Limit: 202 mm (7.95 in.)

Whenever brake drums are removed, they should be thoroughly cleaned and inspected for cracks, scores, deep grooves.

[A] 2WD model
[B] 4WD model

Cracked, scored, or grooved drum

A cracked drum is unsafe for further service and must be replaced. Do not attempt to weld a cracked drum.
Smooth up any slight scores. Heavy or extensive scoring will cause excessive brake lining wear and it will probably be necessary to resurface drum braking surface.
If brake linings are slightly worn and drum is grooved, drum should be polished with fine emery cloth but should no be turned.

BRAKE SHOE

Brake shoe thickness (wear)

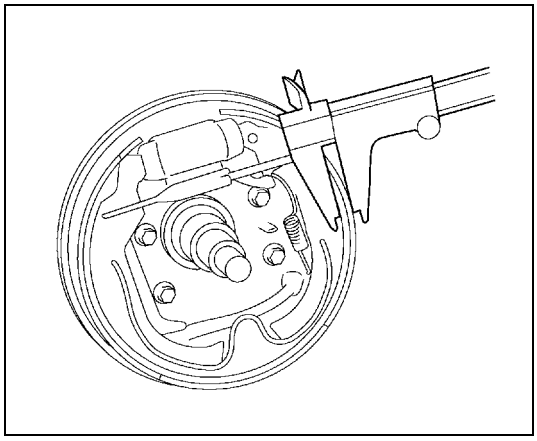

Where lining is worn out beyond service limit, replace shoe.

Thickness (lining + shoe rim)
Standard: 6.4 mm (0.25 in.)
Service limit: 3.6 mm (0.14 in.)

If one of brake linings is to service limit, all linings must be replaced at the same time.

CAUTION:
Never polish lining with sandpaper. If lining is polished with sandpaper, hard particles of sandpaper will be deposited in lining and may damage drum. When it is required to correct lining, replace it with a new one.

WHEEL CYLINDER

Visually inspect wheel cylinder for brake fluid leakage.

PARKING SHOE LEVER

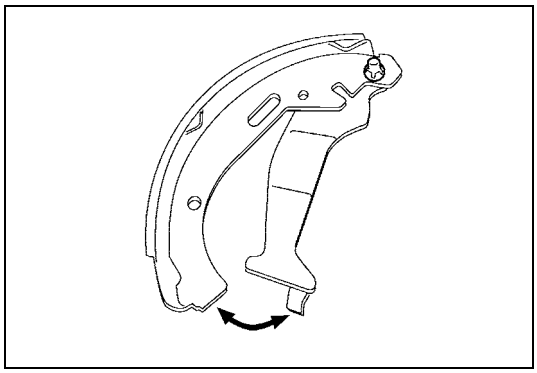

Inspect brake shoe lever for smooth movement along shoe rim. If defective, correct or replace.

BRAKE ADJUSTER (STRUT) AND ADJUSTER ACTUATOR

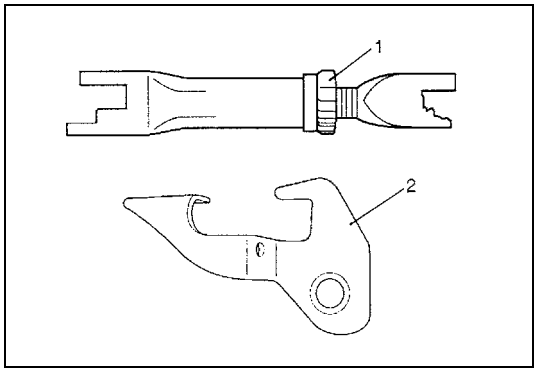

Check ratchet (1) of adjuster and adjuster actuator (2) for operation, wear or damage.

SPRINGS

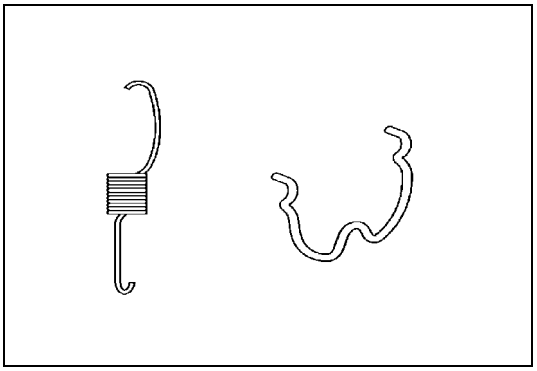

Inspect for damage or weakening.
Inspect each part for rust. If found defective, replace.

ABS SENSOR RING (IF EQUIPPED)

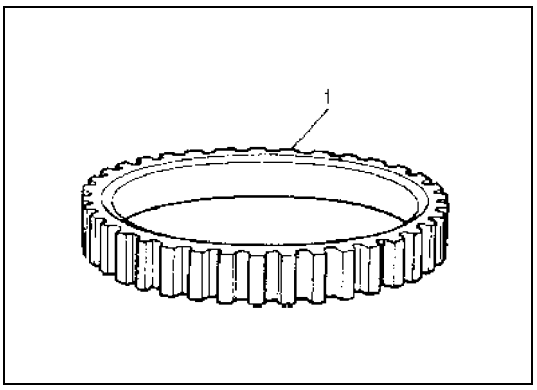

- Check ring serration (teeth) for being missing, damaged or deformed.
- Check sensor ring (1) for being deformed (warped).
- Check that no foreign material is attached.
  If any malfunction is found, repair or replace.

ABS Sensor Ring Replacement (for 2WD Model)

CAUTION:
Do not reuse (reinstall) removed ABS sensor ring.

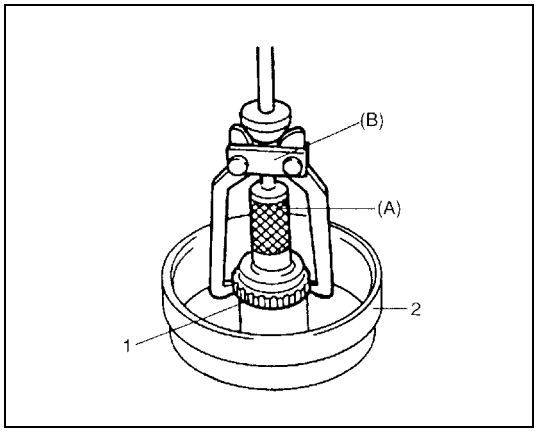

1) Remove sensor ring (1) from brake drum (2) using special tool.

CAUTION:
Pull out sensor ring from brake drum gradually and evenly. Attempt to pull it out partially may cause it to be deformed.

Special tool
(A): 09913-75520
(B): 09913-65135

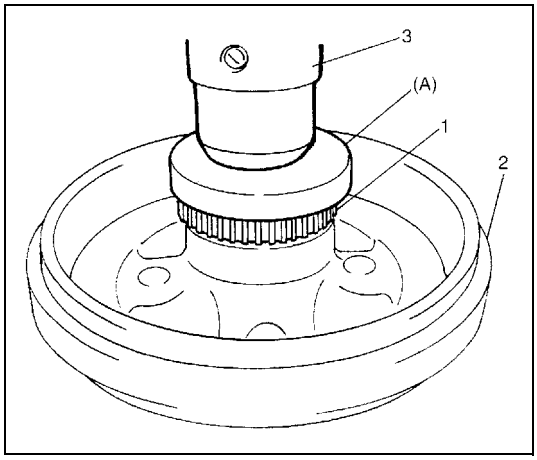

2) Install new sensor ring (1) to brake drum (2) by using special tool and hydraulic press (3).

CAUTION:
Used sensor ring can not be press-fitted securely.

Special tool
(A): 09926-68310

ABS Sensor Ring Replacement (for 4WD Model)

CAUTION:
Do not reuse (reinstall) removed ABS sensor ring.

Replace ABS sensor ring, referring to “Rear Axle Shaft and Wheel Bearing Removal and Installation (for 4WD Model)” in section 3E.

Brake Shoe Removal and Installation

REMOVAL

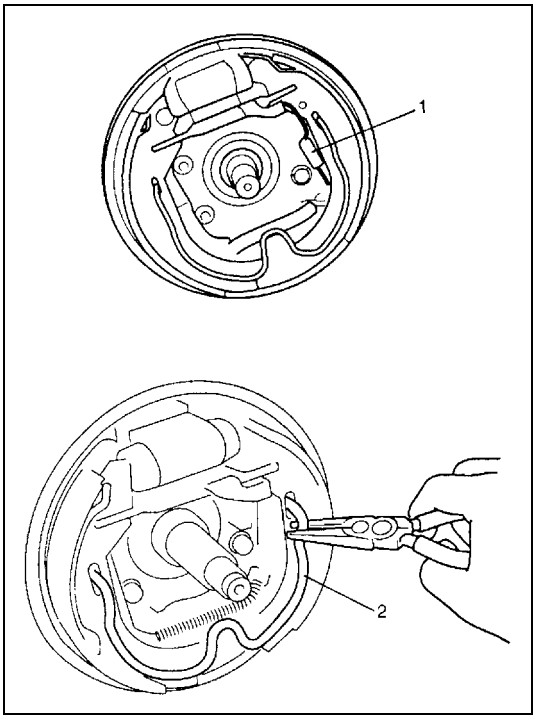

1) Remove brake drum, referring to “REMOVAL” under “Brake Drum Removal and Installation (for 2WD Model)”.
2) Remove adjuster spring (1).
3) Remove retractor spring (2) as shown.

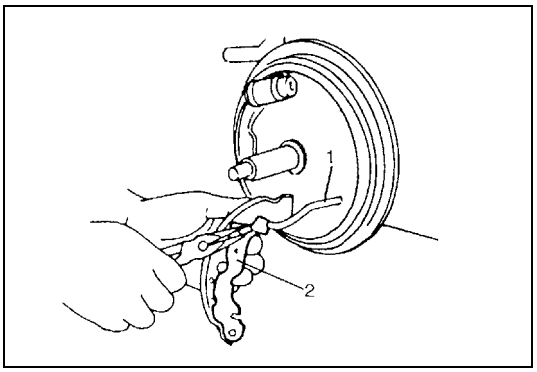

4) Remove brake shoes and disconnect parking brake cable (1) from parking brake shoe lever (2).

INSTALLATION

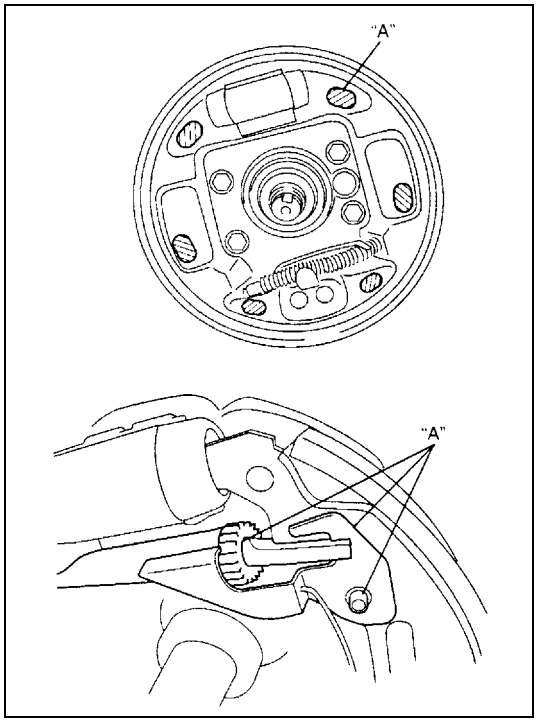

1) When reinstalling brake adjuster, disassemble and thoroughly clean screw threads with a wire brush and apply grease to screw threads.
   Clean brake back plate and apply thin coat of grease to six surface on which shoe rims rest.

"A": Bentonite base brake grease (Anti-squeal agent)

2) Apply thinly grease between actuator and shoe rim, and at actuator pivot point.

"A": Bentonite base brake grease (Anti-squeal agent)

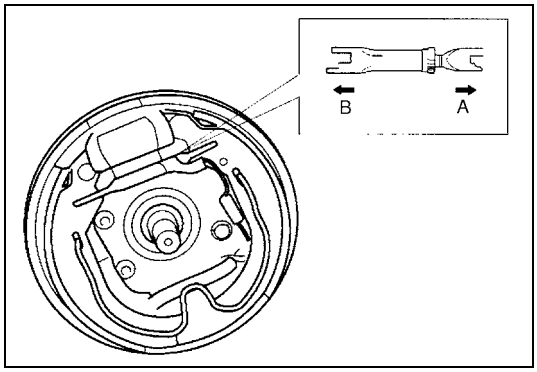

3) Assemble parts as shown in reverse order of Removal.

[A]	Forward
[B]	Rearward

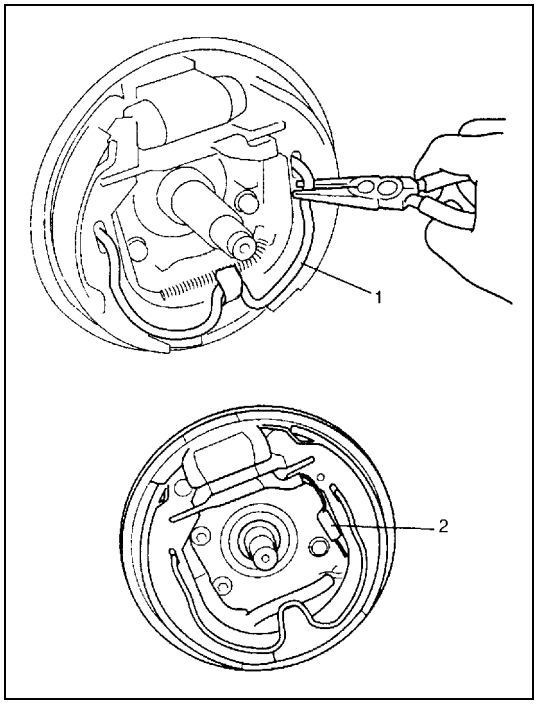

4) Install retractor spring (1) as shown.
5) Install adjuster spring (2) as shown, with loop facing outward.
6) Install brake drum referring to "Brake Drum Removal and Installation (for 2WD Model)" or "Brake Drum Removal and Installation (for 4WD Model)" in this section.

Wheel Cylinder Removal and Installation

REMOVAL

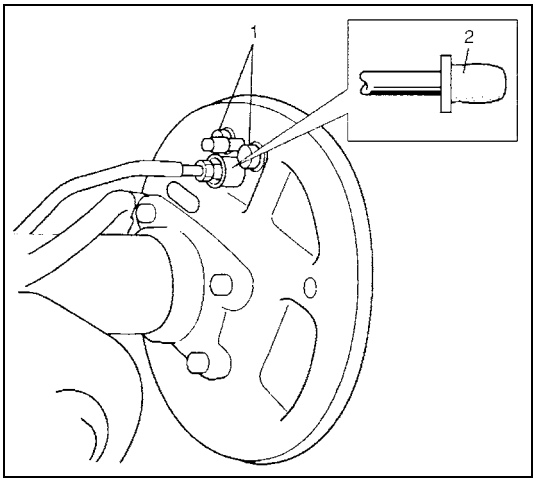

1) Remove brake drum referring to “Brake Drum Removal and Installation (for 2WD Model)” or “Brake Drum Removal and Installation (for 4WD Model)” in this section.
2) Remove brake shoe referring to “Brake Drum Removal and Installation (for 2WD Model)” or “Brake Drum Removal and Installation (for 4WD Model)” in this section.
3) Loosen brake pipe flare nut but only within the extent that fluid does not leak.
4) Remove wheel cylinder mounting bolts (1). Disconnect brake pipe from wheel cylinder and put wheel cylinder bleeder plug cap (2) onto pipe to prevent fluid from spilling.

INSTALLATION

1) Take off bleeder plug cap from brake pipe and connect pipe (for pipes) to wheel cylinder just enough to prevent fluid from leaking.

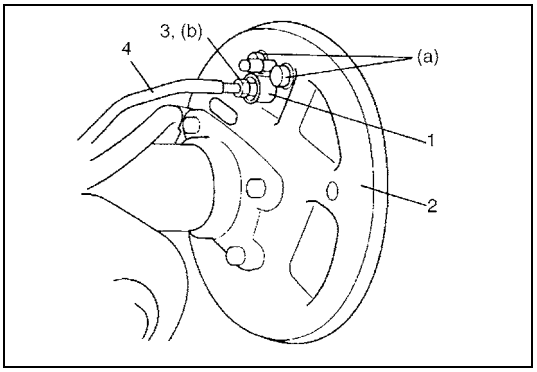

2) Tighten wheel cylinder (1) to brake back plate (2) to specified torque.
3) Torque flare nut (3) of brake pipe (4) which was connected in step 1) to specification.

Tightening torque
Wheel cylinder bolt (a): 11 N·m (1.1 kg-m, 8.0 lb-ft)
Brake pipe flare nut (b): 16 N·m (1.6 kg-m, 12.0 lb-ft)

4) Install bleeder plug cap taken off from pipe back to bleeder plug.
5) For procedure hereafter, refer to “INSTALLATION” under “Brake Shoe Removal and Installation”.

NOTE:

Be sure to bleed brake system. (For bleeding operation, refer to “Air Bleeding of Brake System” in Section 5.)

Wheel Cylinder Inspection

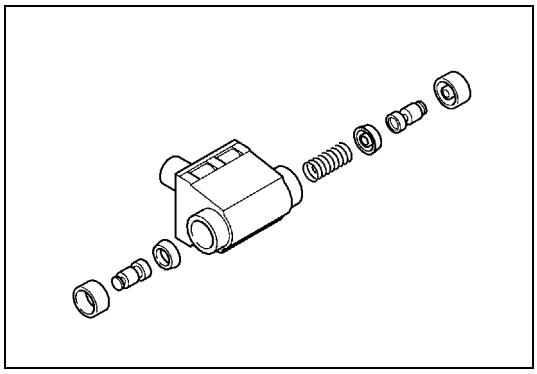

Inspect wheel cylinder disassembled parts for wear, cracks, corrosion or damage.

NOTE:
Clean wheel cylinder components with brake fluid.

Brake Back Plate Removal and Installation (for 2WD Model)

REMOVAL

1) Remove brake drum referring to “Brake Drum Removal and Installation (for 2WD Model)”.
2) Remove brake shoe referring to “Brake Shoe Removal and Installation”.
3) Remove wheel cylinder referring to “Wheel Cylinder Removal and Installation”.

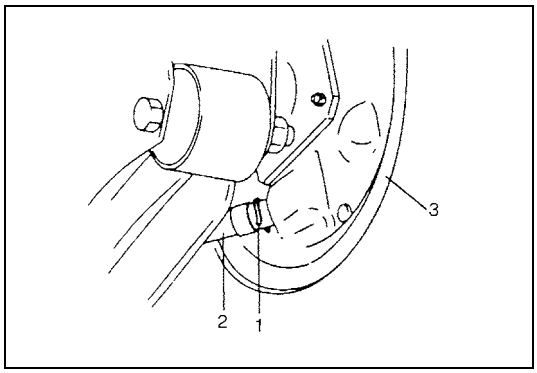

4) Remove parking brake cable securing clip (1) and disconnect brake cable (2) from brake back plate (3).

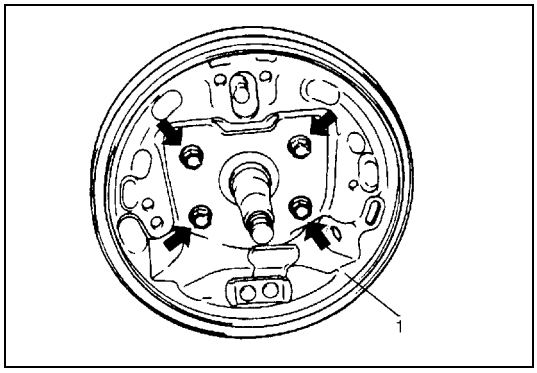

5) Remove brake back plate (1) from rear axle.

INSTALLATION

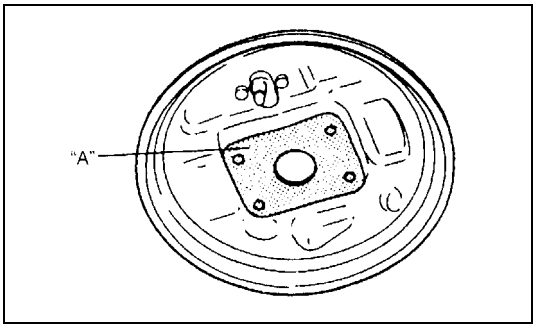

1) Apply water tight sealant to mating surfaces of brake back plate and rear axle.

"A": Sealant 366E, 99000-31090

NOTE:

In case of vehicle equipped with ABS, do not apply sealant around hole for wheel speed sensor.

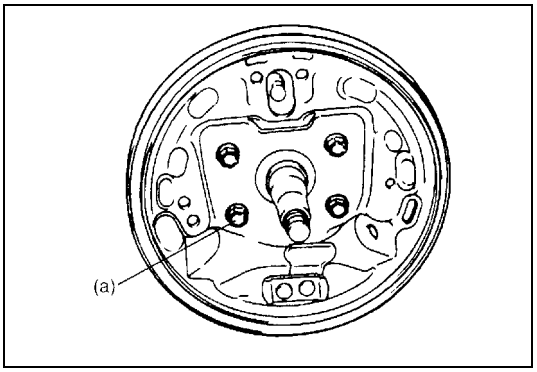

2) Install brake back plate and tighten back plate bolts to specified torque.

Tightening torque
Brake back plate bolt (a): 23 N·m (2.3 kg-m, 17.0 lb-ft)

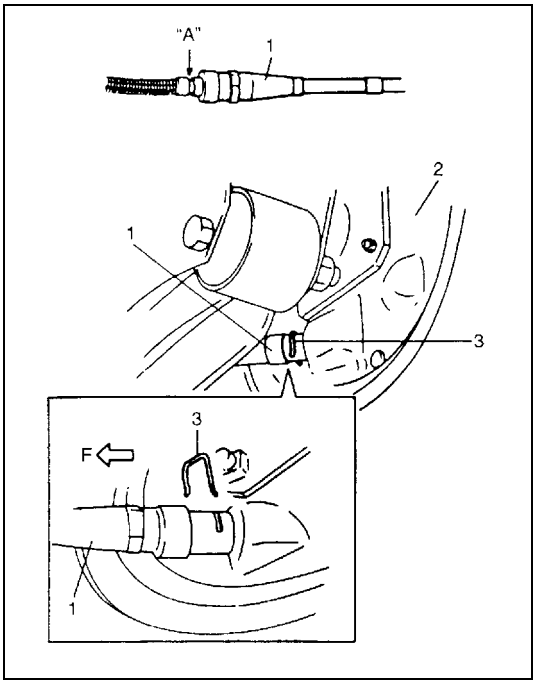

3) Apply water tight sealant where plate and cable contact, and run parking brake cable (1) through brake back plate (2) and secure it with clip (3).

"A": Sealant 366E, 99000-31090

F: Forward

4) Install wheel cylinder, and tighten wheel cylinder bolts and brake pipe flare nut to specified torque. Refer to "Installation" of "Wheel Cylinder Removal and Installation" in this section.
5) Install brake shoe referring to "INSTALLATION" of "Brake Shoe Removal and Installation" in this section.
6) Install brake drum. Refer to "INSTALLATION" of "Brake Drum Removal and Installation (for 2WD Model)" or to "INSTALLATION" of "Brake Drum Removal and Installation (for 4WD Model)" in this section.
7) Fill reservoir with brake fluid and bleed brake system. For bleeding operation, referring to "Air Bleeding of Brake System" in Section 5.

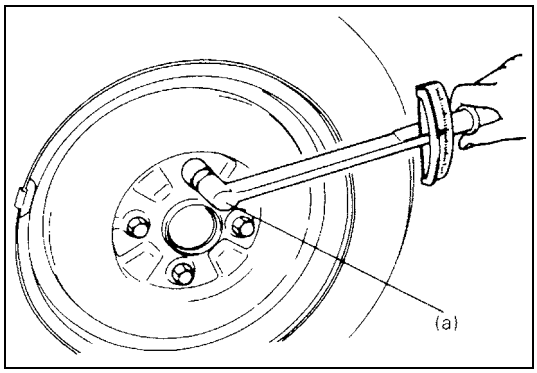

8) Install wheel and tighten wheel bolts to specified torque.

Tightening torque
Wheel bolt (a): 95 N·m (9.5 kg-m, 69.0 lb-ft)

9) Upon completion of all jobs, depress brake pedal with about 300 N (30 kg, 66 lbs) load at least 10 – 15 times until adjuster actuator clicking sound from drum brake can not be heard so as to obtain proper drum-to-shoe clearance.
   Adjust parking brake cable. (For adjustment, refer to "Parking Brake Inspection and Adjustment" in Section 5.)
10) Install console box cap.
11) Check to ensure that brake drum is free from dragging and proper braking is obtained. Then remove vehicle from hoist and perform brake test (foot brake and parking brake).
12) Check each installed part for oil leakage.

Brake Back Plate Removal and Installation (for 4WD Model)

Refer to "Rear Axle Shaft and Wheel Bearing Removal and Installation (for 4WD Model)" in Section 3E.

Parking Brake Cable Component Location

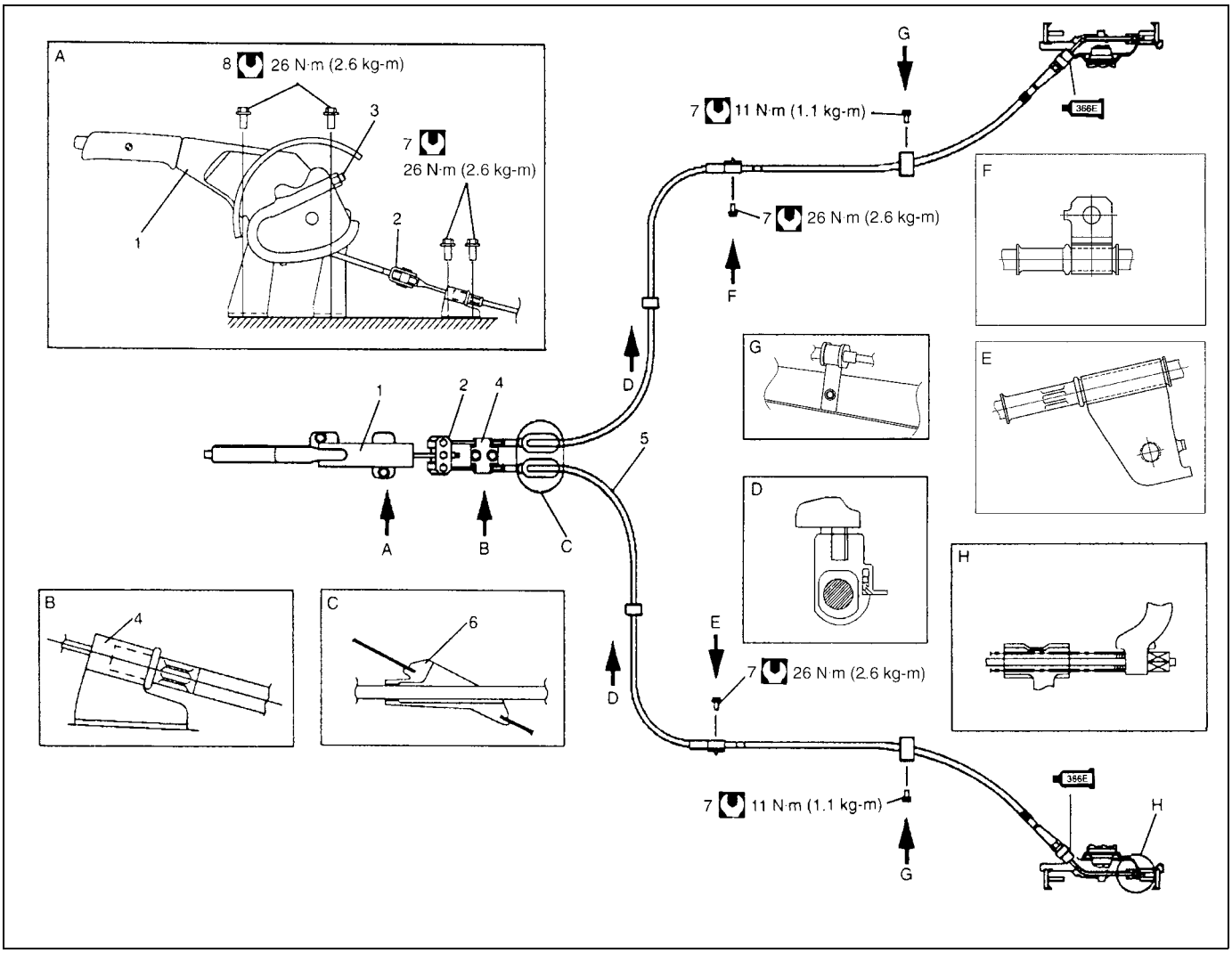

1. Parking brake lever assembly	4. Parking cable bracket	7. Parking brake cable bolt
2. Equalizer	5. Parking brake cable: Apply water tight sealant 99000-31090 to plate and cable contact.	8. Parking brake lever bolt
3. Adjusting nut	6. Grommet	Tightening torque

Parking Brake Cable Removal and Installation

REMOVAL

1) Remove brake drum. Refer to “Brake Drum Removal and Installation (for 2WD Model)” or “Brake Drum Removal and Installation (for 4WD Model)” in this section.
2) Disconnect parking brake cable from brake shoe lever. Refer to “Brake Shoe Removal and Installation” in this section.
3) Disconnect brake cable from brake back plate. Refer to “Brake Back Plate Removal and Installation (for 2WD Model)” of this section or “Rear Axle Shaft and Wheel Bearing Removal and Installation (for 4WD Model)” in Section 3E.

NOTE:

When it is necessary to remove both right and left parking brake cables, repeat above steps 1) and 2) on right and left wheels.

4) Remove cable from equalizer.

INSTALLATION

Install parts in reverse order of removal procedure, noting the following.

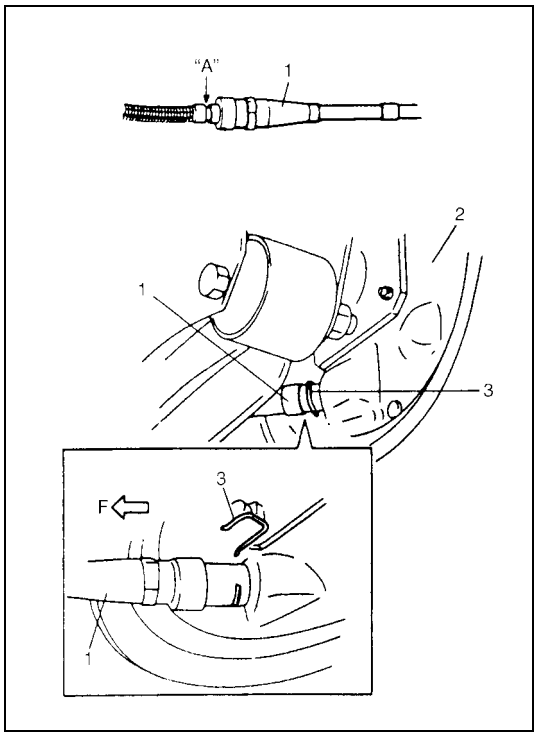

1) Distinguish right side parking brake cable from left side one with its clamp width.
   Parking brake cable with narrow clamp should be installed to right side of vehicle.
2) Apply water tight sealant where plate and cable contact, and run parking brake cable (1) through brake back plate (2) and secure it with clip (3).

“A”: Sealant 366E, 99000-31090

F: Forward

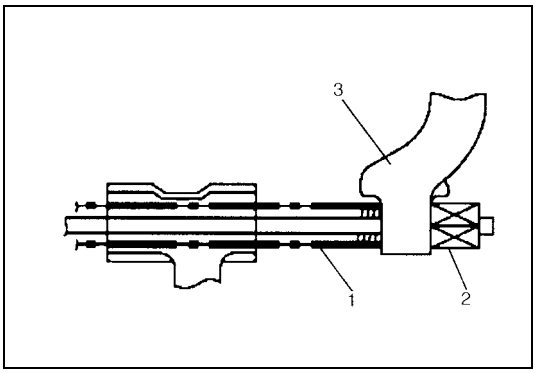

3) Install brake cable spring (1) and nipple end (2) to parking brake shoe lever (3) securely as shown in figure.

4) Install brake shoe referring to “Brake Shoe Removal and Installation” in this section.
5) Install brake drum referring to “Brake Drum Removal and Installation (for 2WD Model)” or “Brake Drum Removal and Installation (for 4WD Model)” in this section.
6) For proper routing and secure clamping of parking brake cable.
7) Install cable to equalizer.
8) Upon completion of installation, adjust cable. Refer to “Parking Brake Inspection and Adjustment” in Section 5. Then check brake drum for dragging and brake system for proper performance. After removing vehicle from hoist, brake test should be performed.

Parking Brake Lever Removal and Installation

REMOVAL

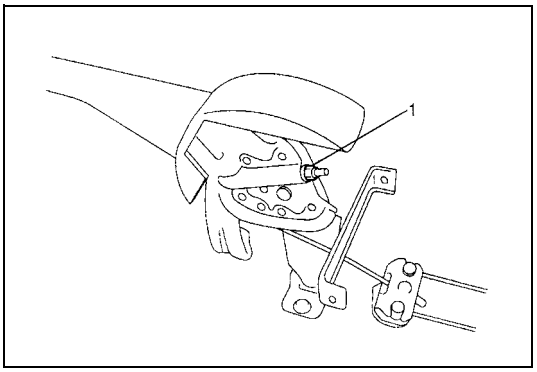

1) Disconnect negative (–) cable at battery.
2) Remove console box.
3) Block vehicle wheels and release parking brake lever.
4) Disconnect lead wire of parking brake switch at coupler.
5) Loosen parking brake cable adjusting nut (1).

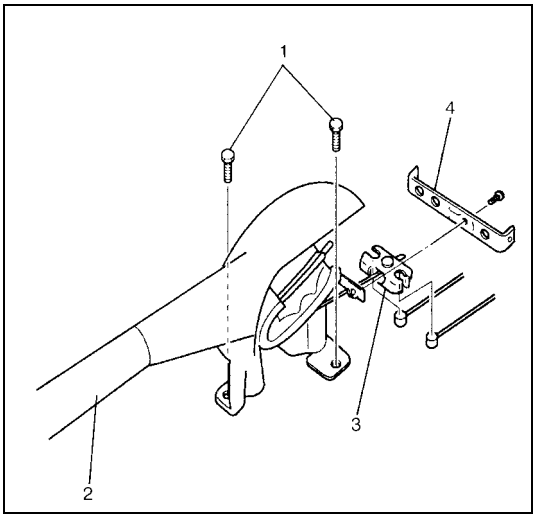

6) Remove parking brake lever bolts (1) and then remove parking brake lever assembly (2) with equalizer (3).
7) Remove console box bracket (4) from parking brake lever assembly.

NOTE:

Don’t disassemble parking brake lever switch. It must be removed and installed as a complete switch assembly.

INSTALLATION

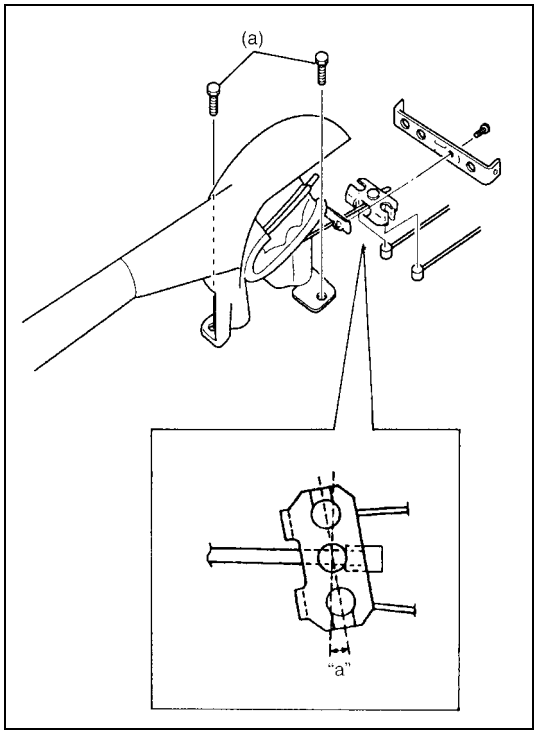

1) Install in reverse order of removal procedure.
   Check equalizer inclined angle.

   Angle "a": within 15 degrees

   Tightening torque
   Parking brake lever mounting bolt
   (a): 26 N·m (2.6 kg-m, 19.0 lb-ft)

2) After all parts are installed, parking brake lever needs to be adjusted. Refer to "Parking Brake Inspection and Adjustment" in Section 5.
3) Check brake drum for dragging and brake system for proper performance.

Required Service Materials

Material	Recommended SUZUKI product (Part Number)	Use
Brake fluid	DOT 4 or SEA J1704	• To fill master cylinder reservoir. • To clean and apply to inner parts of caliper and wheel cylinder when they are disassembled.
Water tight sealant	SEALING COMPOUND 366E 99000-31090	• To apply to mating surfaces of brake back plate and rear wheel cylinder. • To apply to contact position of parking brake cable and back plate. • To apply to mating surfaces of brake back plate and rear axle.
Bentonite base brake grease (Anti-squeal agent)	—	• To coat thinly to surface on which shoe rims rest. • To coat thinly between actuator and shoe rim, and at actuator pivot points.

Special Tools

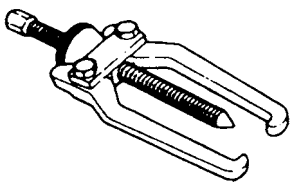 09913-65135 Bearing puller (for 2WD model)	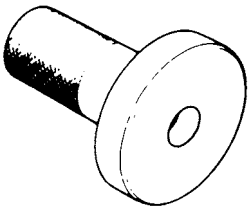 09913-75520 Bearing installer (for 2WD model)	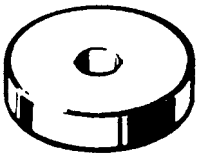 09926-68310 Bearing installer (for 2WD model)	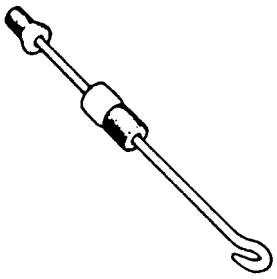 09942-15111 Sliding hammer
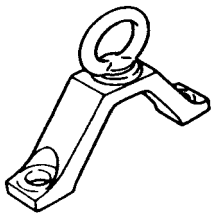 09943-17912 Brake drum remover (Front wheel hub remover)	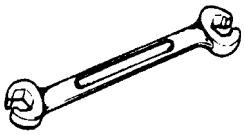 09950-78230 Flare nut wrench (10 – 11 mm)	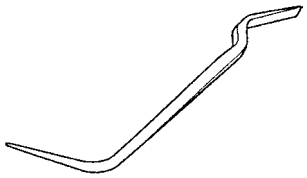 Snap-on Part NO. B3404B or equivalent	

SECTION 5E

ANTILOCK BRAKE SYSTEM (ABS)

WARNING:

For vehicles equipped with Supplemental Restraint (Air Bag) System:

- **Service on and around the air bag system components or wiring must be performed only by an authorized SUZUKI dealer. Refer to "System Components and Wiring Location View" under "General Description" in air bag system section in order to confirm whether you are performing service on or near the air bag system components or wiring. Please observe all WARNINGS and "Service Precautions" under "On-Vehicle Service" in air bag system section before performing service on or around the air bag system components or wiring. Failure to follow WARNINGS could result in unintentional activation of the system or could render the system inoperative. Either of these two conditions may result in severe injury.**
- **Technical service work must be started at least 90 seconds after the ignition switch is turned to the "LOCK" position and the negative cable is disconnected from the battery. Otherwise, the system may be activated by reserve energy in the Sensing and Diagnostic Module (SDM).**

NOTE:

All brake fasteners are important attaching parts in that they could affect the performance of vital parts and systems, and/or could result in major repair expense. They must be replaced with one of same part number or with an equivalent part if replacement becomes necessary. Do not use a replacement part of lesser quality or substitute design. Torque values must be used as specified during reassembly to assure proper retention of all parts. There is to be no welding as it may result in extensive damage and weakening of the metal.

CONTENTS

General Description 5E-3
- Components and Parts Location 5E-3
- System Schematic 5E-4
- ABS Hydraulic Unit/Control Module Assembly 5E-5
  - Self-diagnosis function 5E-5
  - Fail-safe function 5E-5
- System Circuit 5E-6

Diagnosis 5E-8
- Precaution in Diagnosing Troubles 5E-8
- ABS Diagnostic Flow Table 5E-9
- ABS Warning Lamp Check 5E-12
- EBD Warning Lamp (Brake Warning Lamp) Check 5E-12
- Table – A ABS Warning Lamp Circuit Check – Lamp Does Not Come "ON" at Ignition Switch ON 5E-13
- Table – B ABS Warning Lamp Circuit Check – Lamp Comes "ON" Steady 5E-15
- Table – C ABS Warning Lamp Circuit Check – The Lamp Flashes Continuously While Ignition Switch is ON 5E-16
- Table – D EBD Warning Lamp (Brake Warning Lamp) Check – Lamp Comes "ON" Steady 5E-17
- Diagnostic Trouble Code (DTC) Check 5E-18
- Diagnostic Trouble Code (DTC) Clearance 5E-18
- Diagnostic Trouble Code (DTC) Table 5E-19
- Scan Tool Data 5E-20
- Scan Tool Data Definition 5E-20
- Serial Data Link Circuit Check 5E-21
- DTC C1015 – G Sensor Circuit 5E-22
- DTC C1021, DTC C1022 – Right-Front Wheel Speed Sensor Circuit or Sensor Ring 5E-23
- DTC C1025, DTC C1026 – Left-Front Wheel Speed Sensor Circuit or Sensor Ring 5E-23
- DTC C1031, DTC C1032 – Right-Rear Wheel Speed Sensor Circuit or Sensor Ring 5E-23
- DTC C1035, DTC C1036 – Left-Rear Wheel Speed Sensor Circuit or Sensor Ring 5E-23

DTC C1041 – Right-Front Inlet Solenoid Circuit 5E-25
DTC C1045 – Left-Front Inlet Solenoid Circuit 5E-25
DTC C1051 – Right-Rear Inlet Solenoid Circuit 5E-25
DTC C1055 – Left-Rear Inlet Solenoid Circuit 5E-25
DTC C1042 – Right-Front Outlet Solenoid Circuit 5E-25
DTC C1046 – Left-Front Outlet Solenoid Circuit 5E-25
DTC C1052 – Right-Rear Outlet Solenoid Circuit 5E-25
DTC C1056 – Left-Rear Outlet Solenoid Circuit 5E-25
DTC C1057 – Power Source Circuit 5E-27
DTC C1061 – ABS Pump Motor Circuit 5E-28
DTC C1063 – ABS Fail-Safe Relay Circuit 5E-29
DTC C1071 – ABS Control Module 5E-30
On-Vehicle Service 5E-31
Precautions 5E-31
ABS Hydraulic Unit Operation Check 5E-31
ABS Hydraulic Unit/Control Module Assembly Components 5E-32
ABS Hydraulic Unit Control Module Inspection 5E-32
ABS Hydraulic Unit/Control Module Removal and Installation 5E-32
Front Wheel Speed Sensor Components 5E-34
Front Wheel Speed Sensor On-Vehicle Inspection 5E-34
Front Wheel Speed Sensor Removal and Installation 5E-35
Front Wheel Speed Sensor Inspection 5E-36
Front Wheel Speed Sensor Ring Removal and Installation 5E-36
Front Wheel Speed Sensor Ring Inspection 5E-37
Rear Wheel Speed Sensor Components 5E-37
Rear Wheel Speed Sensor On-Vehicle Inspection 5E-38
Rear Wheel Speed Sensor Removal and Installation 5E-39
Rear Wheel Speed Sensor Inspection 5E-40
Rear Wheel Speed Sensor Ring (For 2WD Vehicle) Removal and Installation 5E-40
Rear Wheel Speed Sensor Ring (For 2WD Vehicle) Inspection 5E-40
Rear Wheel Speed Sensor Ring (For 4WD Vehicle) Removal and Installation 5E-40
Rear Wheel Speed Sensor Ring (For 4WD Vehicle) Inspection 5E-40
Special Tool 5E-41

General Description

Components and Parts Location

The ABS (Antilock Brake System) controls the fluid pressure applied to the Wheel cylinder of each brake from the master cylinder so that each wheel is not locked even when hard braking is applied.
This ABS has also the following function.
While braking is applied, but before ABS control becomes effective, braking force is distributed between the front and rear so as to prevent the rear wheels from being locked too early for better stability of the vehicle.
The main component parts of this ABS include the following parts in addition to those of the conventional brake system.

- Wheel speed sensor which senses revolution speed of each wheel and outputs its signal.
- "ABS" warning lamp which lights to inform abnormality when system fails to operate properly.
- ABS hydraulic unit/control module assembly is incorporated ABS control module, ABS hydraulic unit (actuator assembly), fail-safe relay (transistor) and pump motor relay (transistor).
  - ABS control module which sends operation signal to ABS hydraulic unit to control fluid pressure applied to each wheel cylinder based on signal from each wheel speed sensor so as to prevent wheel from locking.
  - ABS hydraulic unit which operates according to signal from ABS control module to control fluid pressure applied to wheel cylinder of each 4 wheels.
  - Fail-safe relay (solenoid valve relay) which supplies power to solenoid valve in ABS hydraulic unit.
  - Pump motor relay which supplies power to pump motor in ABS hydraulic unit.
- G sensor which detects vehicle deceleration speed. (For 4WD model only)

This ABS is equipped with Electronic Brake force Distribution (EBD) system that controls a fluid pressure of rear wheels to best condition, which is the same function as that of proportioning valve, by the signal from wheel speed sensor independently of change of load due to load capacity and so on. And if the EBD system fails to operate properly, the brake warning lamp lights to inform abnormality.

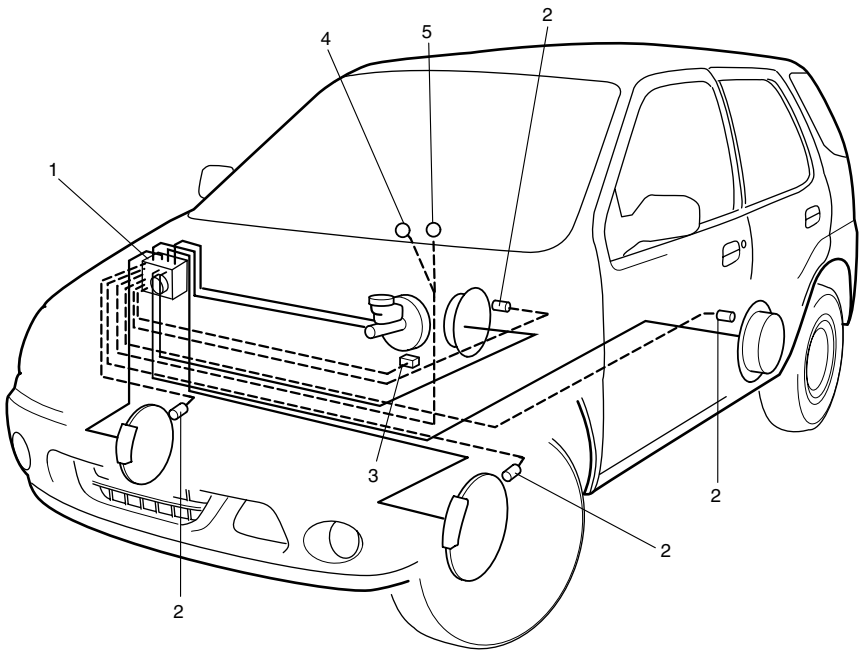

[A]: LH steering vehicle shown	2. Wheel speed sensor	4. ABS warning lamp
1. ABS hydraulic unit/control module assembly (including G sensor (For 4WD model))	3. Brake light switch	5. EBD warning lamp (Brake warning lamp)

System Schematic

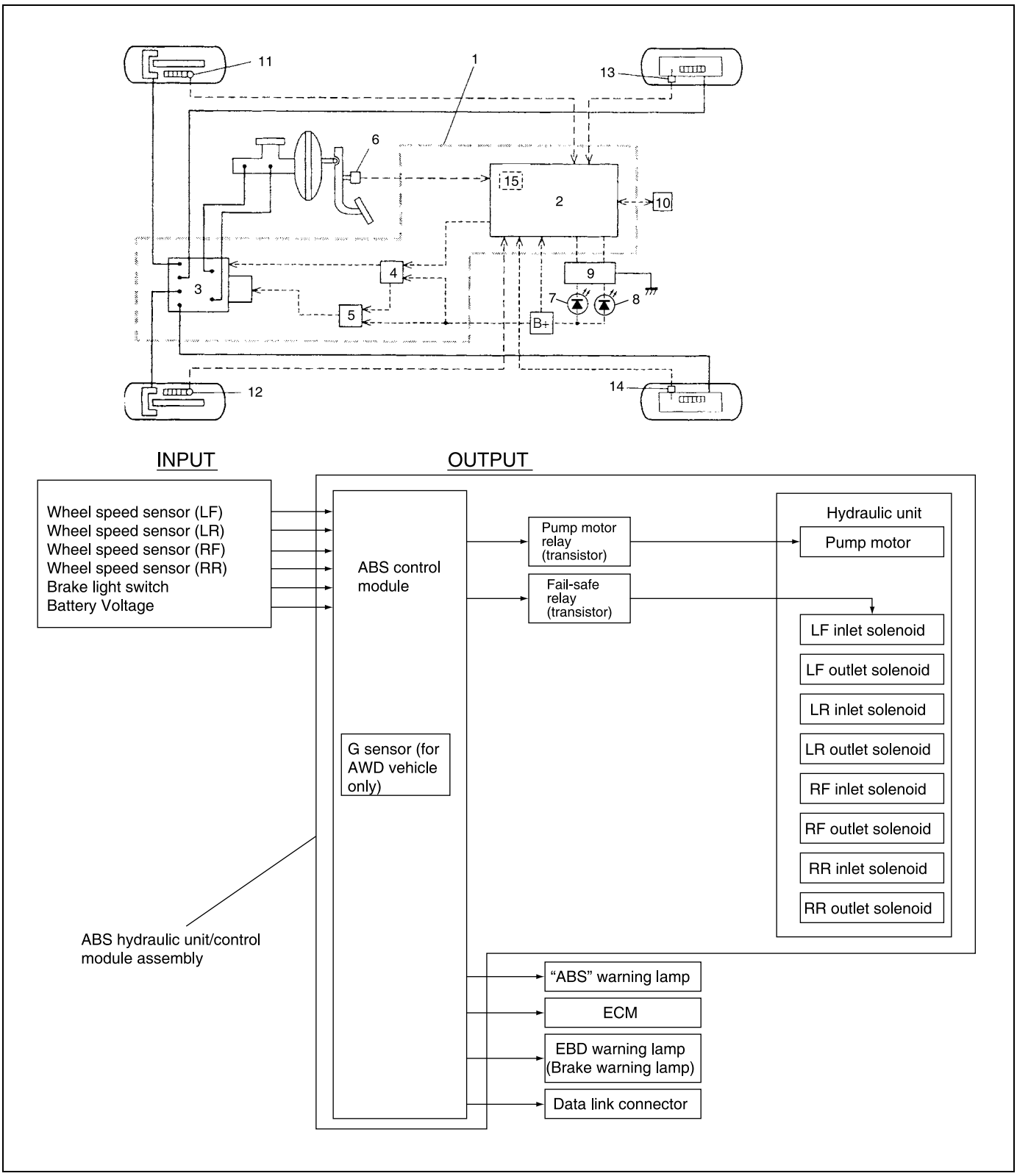

1. ABS hydraulic unit/control module assembly	6. Stop lamp switch	11. Wheel speed sensor (Right-front)
2. ABS control module	7. "ABS" warning lamp	12. Wheel speed sensor (Left-front)
3. ABS hydraulic unit	8. "EBD" warning lamp (Brake warning lamp)	13. Wheel speed sensor (Right-rear)
4. Fail safe relay (transistor)	9. Lamp driver module	14. Wheel speed sensor (Left-rear)
5. Pump motor relay (transistor)	10. Data link connector	15. G sensor (For 4WD model only)

ABS Hydraulic Unit/Control Module Assembly

ABS control module is a component of ABS hydraulic unit/control module assembly and has the following functions.

Self-diagnosis function

ABS control module diagnoses conditions of the system component parts (whether or not there is any abnormality) all the time and indicates the results (warning of abnormality occurrence and DTC) through the ABS warning lamp (1) as described below.

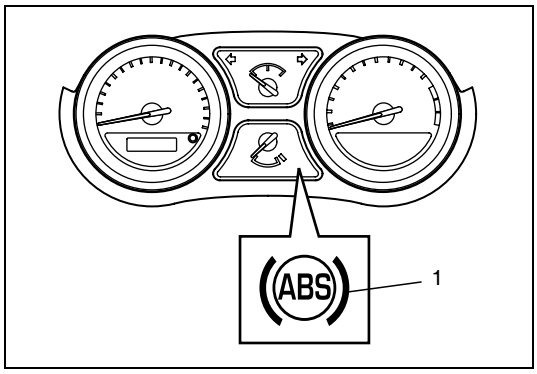

1) When ignition switch is turned ON, ABS warning lamp lights for 2 seconds to check lamp circuit.
2) When no abnormality has been detected (the system is in good condition), ABS warning lamp turns OFF after 2 seconds.
3) When an abnormality in the system is detected, ABS warning lamp lights and the area where that abnormality lies is stored in the memory of EEPROM in ABS control module.

Fail-safe function

When an abnormality occurs (an abnormal DTC is detected), ABS control module turns OFF the fail-safe relay (transistor) which supplies power to ABS hydraulic unit. Thus, with ABS not operating, brakes function just like the brake system of the vehicle without ABS.

System Circuit

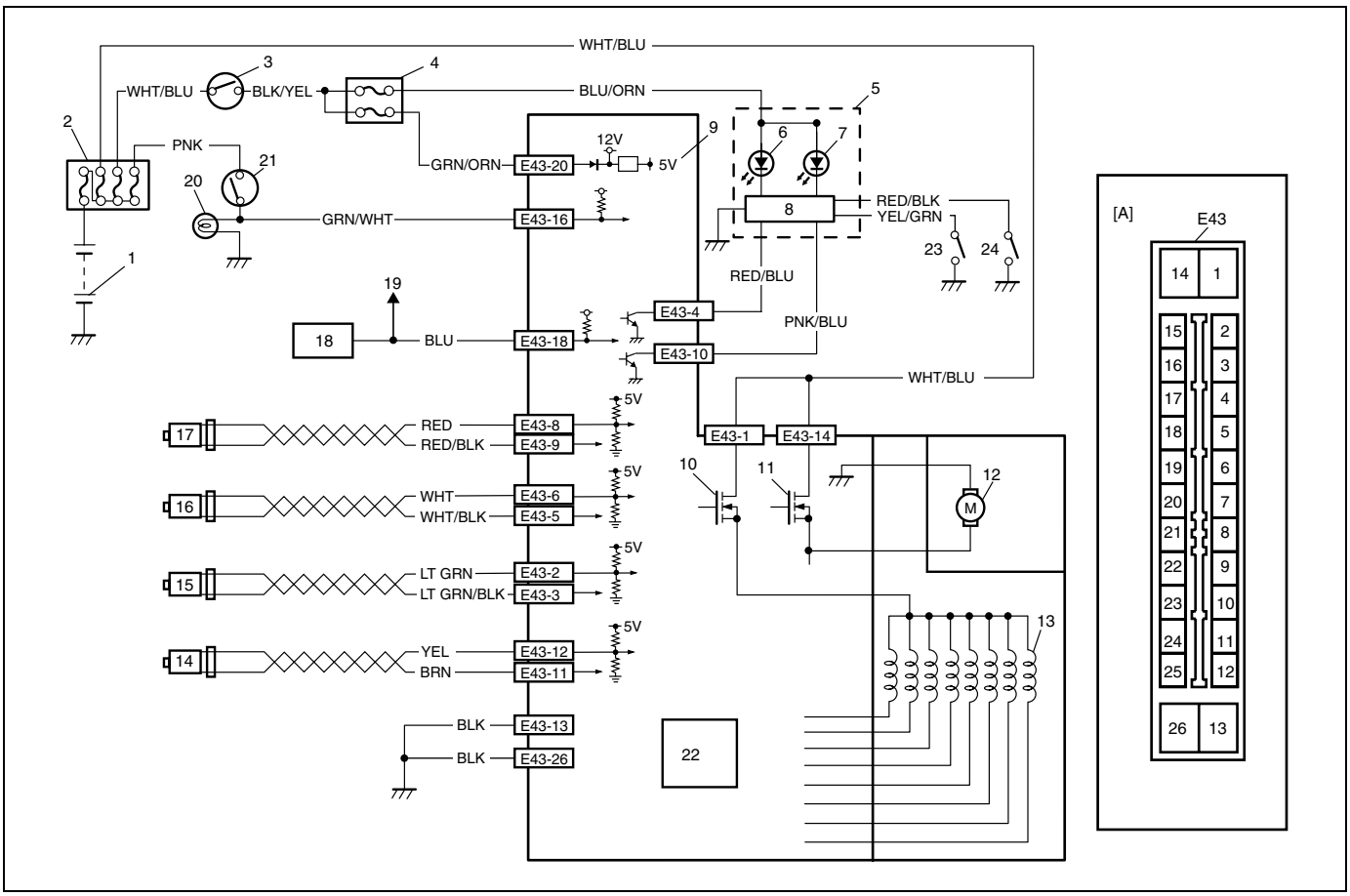

[A]: Terminal arrangement of ABS hydraulic unit/ control module assembly	9. ABS hydraulic unit/control module assembly	18. Data link connector
1. Battery	10. ABS fail-safe relay (transistor) (Solenoid valve relay (transistor))	19. To ECM, TCM, SDM and P/S control module (if equipped)
2. Main fuses	11. ABS pump motor relay (transistor)	20. Stop lamp
3. Ignition switch	12. Pump motor	21. Brake light switch
4. Circuit fuses	13. Solenoid valves	22. G sensor (For 4WD model only)
5. Combination meter	14. Right-rear wheel speed sensor	23. Brake fluid level switch
6. ABS warning lamp	15. Left-rear wheel speed sensor	24. Parking brake switch
7. Brake warning lamp	16. Right-front wheel speed sensor	
8. Lamp driver module	17. Left-front wheel speed sensor	

TERMINAL		CIRCUIT
E43	1	ABS fail-safe relay (transistor)
	2	Left-rear wheel speed sensor (+)
	3	Left rear wheel speed sensor (–)
	4	“ABS” warning lamp
	5	Right-front wheel speed sensor (–)
	6	Right-front wheel speed sensor (+)
	7	–
	8	Left-front wheel speed sensor (+)
	9	Left front wheel speed sensor (–)
	10	Brake warning lamp
	11	Right-rear wheel speed sensor (+)
	12	Right-rear wheel speed sensor (–)
	13	Ground
	14	ABS pump motor relay (transistor)
	15	–
	16	Brake light switch
	17	–
	18	Data link connector
	19	–
	20	Ignition switch
	21	–
	22	–
	23	–
	24	–
	25	–
	26	Ground

Diagnosis

To ensure that the trouble diagnosis is done accurately and smoothly, observe “Precaution in Diagnosing Troubles” and follow “ABS Diagnostic Flow Table”.

Precaution in Diagnosing Troubles

- If the vehicles was operated in any of the following ways, ABS warning lamp may light momentarily but this does not indicate anything abnormal in ABS.
  – The vehicle was driven with parking brake pulled.
  – The vehicle was driven with brake dragging.
  – The vehicle was stuck in mud, sand, etc.
  – Wheel spin occurred while driving.
  – Wheel(s) was rotated while the vehicle was jacked up.
- Be sure to read “Precautions for Electrical Circuit Service” in Section 0A before inspection and observe what is written there.
- Be sure to use the trouble diagnosis procedure as described in the flow table. Failure to follow the flow table may result in incorrect diagnosis. (Some other diagnosis trouble code may be stored by mistake in the memory of ABS control module during inspection.)

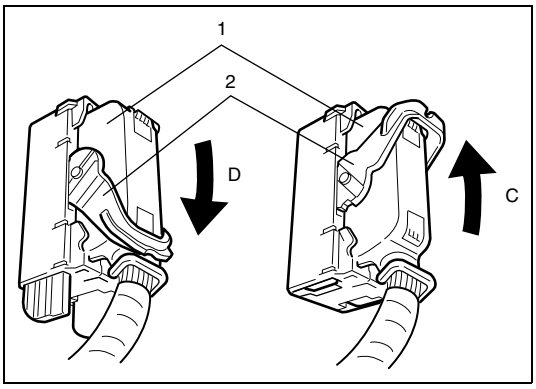

- When disconnecting ABS hydraulic unit/control module connector (1), turn down lock (2) of connector.
  When connecting, set the connector on ABS hydraulic unit/control module assembly and push the lock (2) up.

C: Turn down to disconnect
D: Turn up to connect

ABS Diagnostic Flow Table

Refer to the following pages for the details of each step.

Step	Action	Yes	No
1	1) Perform “Customer Complaint Analysis”. 2) Perform “Problem Symptom Confirmation”. 3) Perform “Diagnostic Trouble Code Check, Record and Clearance”. Is there any malfunction DTC?	Go to Step 2.	Go to Step 5.
2	1) Perform “DRIVING TEST”. Is trouble symptom identified?	Go to Step 3.	Go to Step 6.
3	1) Check DTC. Is it malfunction DTC?	Go to Step 4.	Go to Step 5.
4	1) Inspect and repair referring to applicable DTC table in this section. 2) Perform “FINAL CONFIRMATION TEST” after cleared DTC. Does trouble recur?	Go to Step 7.	End.
5	1) Inspect and repair referring to “Diagnosis” in Section 5. 2) Perform “FINAL CONFIRMATION TEST”.	Go to Step 7.	End.
6	1) Check intermittent troubles referring to “Intermittent and Poor Connection” in Section 0A and related circuit of trouble code recorded in Step 2. 2) Perform “FINAL CONFIRMATION TEST” after cleared DTC. Does trouble recur?	Go to Step 7.	End.
7	1) Perform “Diagnostic Trouble Code Check, Record and Clearance”. Is there any malfunction DTC?	Go to Step 2.	Go to Step 5.

1) MALFUNCTION ANALYSIS

a) Customer Complaint Analysis

Record details of the problem (failure, complaint) and how it occurred as described by the customer.
For this purpose, use of such a questionnaire form as shown below will facilitate collecting information to the point required for proper analysis and diagnosis.

CUSTOMER QUESTIONNAIRE (EXAMPLE)

Customer's name:	Model:	VIN:	
Date of issue:	Date of Reg:	Date of problem:	Mileage:

Problem Symptoms	• ABS warning lamp abnormal: fails to turn on/fails to go off/flashes • Abnormal noise while vehicle is running: from motor, from valve, other_____ • Wheel is locked at braking: • Pump motor does not stop (running): • Braking does not work: • Other:
Frequency of occurrence	• Continuous/Intermittent (times a day, a month)/ other_____
Conditions for Occurrence of Problem	• Vehicle at stop & ignition switch ON: • When starting: at initial start only/at every start/Other_____ • Vehicle speed: while accelerating/while decelerating/at stop/ while turning/while running at constant speed/ other_____ • Road surface condition: Paved road/rough road/snow-covered road/ other_____ • Chain equipment:
Environmental Condition	• Weather: fair/cloudy/rain/snow/other_____ • Temperature: °F (°C)
Diagnostic Trouble Code	• First check: Normal code/malfunction code ( ) • Second check after test drive: Normal code/malfunction code ( )

b) Problem Symptom Confirmation

Check if what the customer claimed in "CUSTOMER QUESTIONNAIRE" is actually found in the vehicle and if that symptom is found, whether it is identified as a failure. (This step should be shared with the customer if possible.) Check warning lamps related to brake system referring to "EBD Warning Lamp (Brake Warning Lamp) Check" and "ABS Warning Lamp Check" in this section.

c) Diagnostic Trouble Code (DTC) Check, Record and Clearance
Perform “Diagnostic Trouble Code (DTC) Check” procedure in this section, record it and then clear it referring to “Diagnostic Trouble Code (DTC) Clearance” in this section.
If the malfunction DTC which was once displayed and then cleared cannot be detected (indicated) again when the ignition switch is turned ON, attempt to diagnose the trouble based on the DTC recorded in this step may mislead the diagnosis or make diagnosing difficult. Proceed to Step 2) to check control module for proper self-diagnosis function.
If the malfunction DTC which was once displayed and then cleared can be detected (indicated) again when ignition switch is turned ON, proceed to Step 3).

2) DRIVING TEST
Test drive the vehicle at 40 km/h for more than a minute and check if any trouble symptom (such as abnormal lighting of ABS warning light) exists.
If the malfunction DTC is confirmed again at ignition switch ON, driving test as described in above is not necessary. Proceed to Step 3).

3) DIAGNOSTIC TROUBLE CODE CHECK
Recheck diagnostic trouble code referring to “Diagnostic Trouble Code (DTC) Check” as shown in the following page.

4) DIAGNOSTIC TROUBLE CODE FLOW TABLE
According to Diagnostic flow table for the diagnostic trouble code confirmation in Step 3), locate the cause of the trouble, namely in a sensor, switch, wire harness, connector, actuator assembly or other part and repair or replace faulty parts.

5) “Diagnosis” IN SECTION 5
Check the parts or system suspected as a possible cause referring to “Diagnosis” in Section 5 and based on symptoms appearing on the vehicle (symptom obtained through Steps 1)-a, 1)-b and 2) and repair or replace faulty parts, if any).

6) CHECK FOR INTERMITTENT PROBLEM
Check parts where an intermittent trouble is easy to occur (e.g., wire harness, connector, etc.), referring to “Intermittent and Poor Connection” in Section 0A and related circuit of trouble code recorded in Step 1)-c.

7) FINAL CONFIRMATION TEST
Confirm that the problem symptom has gone and the ABS is free from any abnormal conditions. If what has been repaired is related to the malfunction DTC, clear the DTC once and perform test driving and confirm that no DTC is indicated.

ABS Warning Lamp Check

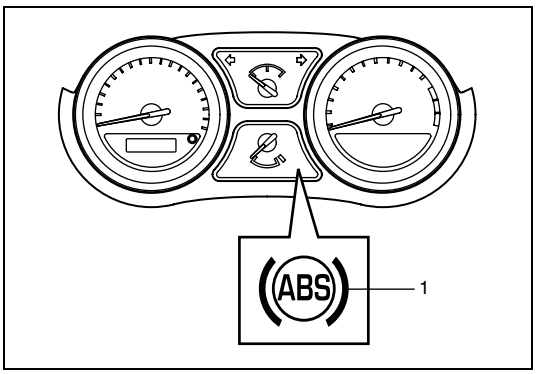

1) Turn ignition switch ON.
2) Check that ABS warning lamp (1) comes ON for about 2 seconds and then goes off.
   If any faulty condition is found, advance to Diagnostic Flow Table-A, B, or C.

EBD Warning Lamp (Brake Warning Lamp) Check

NOTE:

Perform this check on a level place.

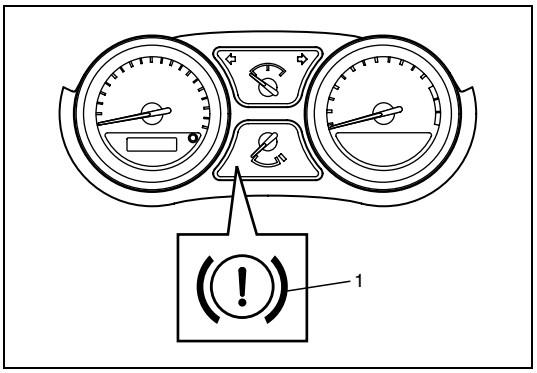

1) Turn ignition switch ON with parking brake applied.
2) Check that EBD warning lamp (brake warning lamp) (1) is turned ON.
3) Release parking brake with ignition switch ON and check that EBD warning lamp (brake warning lamp) goes off.
   If it doesn't go off, go to "Table – D EBD Warning Lamp (Brake Warning Lamp) Check – Lamp Comes "ON" Steady" in this section.

Table – A ABS Warning Lamp Circuit Check – Lamp Does Not Come "ON" at Ignition Switch ON

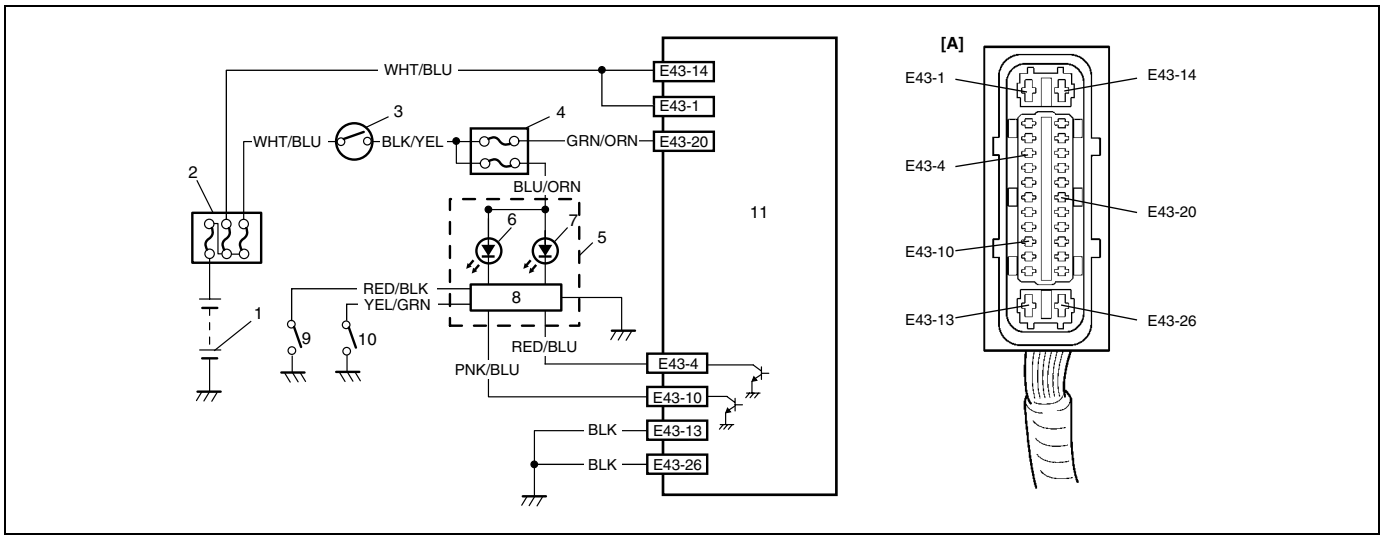

[A]: ABS hydraulic unit/control module connector E43	4. Circuit fuse	8. Lamp driver module
1. Battery	5. Combination meter	9. Brake fluid level switch
2. Main fuse	6. Brake warning lamp	10. Parking brake switch
3. Ignition switch	7. ABS warning lamp	11. ABS hydraulic unit/control module assembly

CIRCUIT DESCRIPTION

Operation (ON/OFF) of ABS warning lamp is controlled by ABS control module through lamp driver module in combination meter.

If the Antilock brake system is in good condition, ABS control module turns ABS warning lamp ON at the ignition switch ON, keeps it ON for 2 seconds and then turns it OFF. If an abnormality in the system is detected, ABS warning lamp is turned ON continuously by ABS control module. Also, it is turned ON continuously by lamp driver module when the connector of ABS control module is disconnected.

INSPECTION

Step	Action	Yes	No
1	1) Turn ignition switch to ON position. Do other warning lamps come ON?	Go to Step 2.	Go to Step 4.
2	1) Turn OFF ignition switch. 2) Disconnect ABS hydraulic unit/control module connector. 3) Turn ON ignition switch. Does ABS warning lamp light with ignition switch ON?	Replace ABS hydraulic unit/control module assembly.	Go to Step 3.
3	1) Remove combination meter with ignition switch turned OFF. 2) Measure resistance between "RED/BLU" wire of combination meter connector and ground. Is it infinite (∞)?	Go to Step 6.	"RED/BLU" circuit shorted to ground.
4	Is "METER" fuse in good condition?	Go to Step 5.	Replace fuse and check for short circuit to ground.

Step	Action	Yes	No
5	1) Remove combination meter with ignition switch turned OFF. 2) Check for roper connection to “BLU/ORN” wire of combination meter connector. 3) If OK, turn ON ignition switch and measure voltage at “BLU/ORN” wire of combination meter connector. Is it 10 – 14 V?	Go to Step 6.	“BLU/ORN” circuit open.
6	1) Measure resistance between “BLK” wire of combination meter connector and ground. Is resistance below 5 Ω?	Replace combination meter.	“BLK” circuit open or high resistance.

Table – B ABS Warning Lamp Circuit Check – Lamp Comes "ON" Steady

Refer to TABLE – A for System Circuit Diagram and Circuit Description.

INSPECTION

Step	Action	Yes	No
1	Perform diagnostic trouble code check. Is there any DTC?	Go to Step 7 of "ABS Diagnostic Flow Table" in this section.	Go to Step 2.
2	1) Disconnect ABS hydraulic unit/control module connector. 2) Check for proper connection to ABS hydraulic unit/control module connector at terminals "E43-4", "E43-20" and "E43-13". 3) If OK then ignition switch ON and measure voltage at terminal "E43-20" of connector. Is it 10 – 14 V?	Go to Step 3.	"GRN/ORN" circuit open.
3	1) With ABS hydraulic unit/control module connector disconnected, turn ignition switch ON and light ABS warning lamp. 2) Connect terminal "E43-4" of disconnected connector to ground using service wire. Does ABS warning lamp turn off?	Go to Step 4.	"RED/BLU" circuit open. If wire and connection are OK, replace combination meter.
4	1) Measure resistance from connector terminal "E43-13 and 26" to body ground. Is continuity indicated?	Substitute a known-good ABS hydraulic unit/control module assembly and recheck.	"BLK" circuit open.

Table – C ABS Warning Lamp Circuit Check – The Lamp Flashes Continuously While Ignition Switch is ON

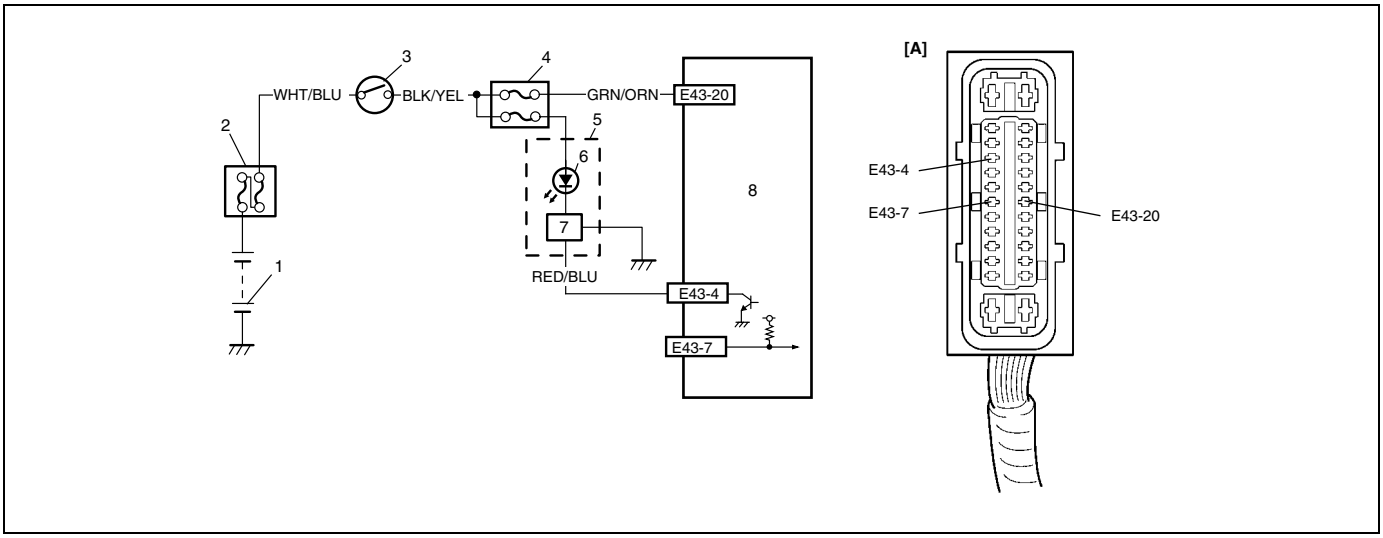

[A]: ABS hydraulic unit/control module connector E43	3. Ignition switch	6. "ABS" warning lamp
1. Battery	4. Circuit fuse	7. Lamp driver module
2. Main fuse	5. Combination meter	8. ABS hydraulic unit/control module assembly

INSPECTION

Step	Action	Yes	No
1	1) Check for proper connection to ABS control module at ABS hydraulic unit/control module connector. Is it in good condition?	Substitute a known-good ABS hydraulic unit/control module assembly and recheck.	"E43-7" terminal shorted to ground.

Table – D EBD Warning Lamp (Brake Warning Lamp) Check – Lamp Comes "ON" Steady

CIRCUIT DESCRIPTION

EBD warning lamp (Brake warning lamp) is controlled by parking brake switch, brake fluid level switch and ABS control module/hydraulic unit assembly through lamp driver module in combination meter. Refer to "TABLE – A" for circuit diagram.

INSPECTION

Step	Action	Yes	No
1	1) Make sure that: • Parking brake is completely released. • Brake fluid level is upper than the minimum level. Are the check results OK?	Go to Step 2.	Release parking brake completely and/or replenish brake fluid.
2	Does "ABS" warning lamp come on?	Perform "TABLE – B ABS Warning Lamp Circuit Check – Lamp Comes "ON" Steady" previously outlined.	Go to Step 3.
3	1) Disconnect ABS hydraulic unit/control module connector. 2) Check for proper connection to ABS hydraulic unit/control module connector at terminals "E43-10". 3) If OK, apply chocks to wheels and select gear in neutral position. 4) Keep brake pedal depressed and start engine. Release parking brake. 5) Connect terminal "E43-10" of disconnected connector to ground using service wire. Does brake warning lamp turn off?	Substitute a known-good ABS hydraulic unit/control module assembly and recheck.	"PNK/BLU" circuit open. If wire and connection are OK, replace combination meter.

Diagnostic Trouble Code (DTC) Check

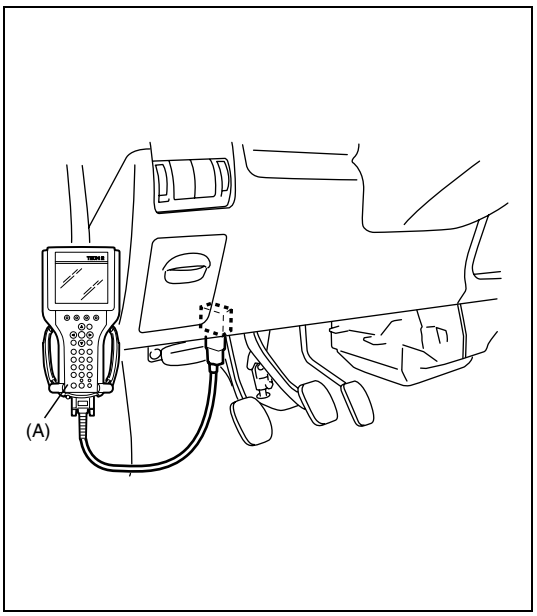

1) Turn ignition switch to OFF position.
2) Connect Suzuki Scan Tool to data link connector.

Special tool
(A): Suzuki Scan Tool

3) Turn ignition switch ON.
4) Read DTC according to instructions displayed on Suzuki Scan Tool and print it or write it down. Refer to Suzuki Scan Tool operator's manual for further details.

NOTE:

If Suzuki Scan Tool cannot communicate ABS hydraulic unit/control module, perform "Serial Data Link Circuit Check" described in this section.

5) After completing the check, turn ignition switch off and disconnect Suzuki Scan Tool from DLC.

Diagnostic Trouble Code (DTC) Clearance

WARNING:

When performing a driving test, select a safe place where there is neither any traffic nor any traffic accident possibility and be very careful during testing to avoid occurrence of an accident.

After repair or replace malfunction part(s), clear all DTCs by performing the following procedure.

1) Connect Suzuki Scan Tool to data link connector in the same manner as when making this connection for DTC check.
2) Turn ignition switch ON.
3) Erase DTC according to instructions displayed on scan tool. Refer to scan tool operator's manual for further details.
4) After completing the clearance, turn ignition switch off and disconnect scan tool from data link connector.

Diagnostic Trouble Code (DTC) Table

DTC (displayed on Suzuki Scan Tool)	DIAGNOSTIC ITEMS	
NO DTC	Normal	
C1015	G sensor circuit	
C1021	RF	Wheel speed sensor circuit
C1025	LF	
C1031	RR	
C1035	LR	
C1022	RF	Wheel speed sensor circuit or sensor ring
C1026	LF	
C1032	RR	
C1036	LR	
C1041	RF	Inlet solenoid valve circuit
C1042		Outlet solenoid valve circuit
C1045	LF	Inlet solenoid valve circuit
C1046		Outlet solenoid valve circuit
C1051	RR	Inlet solenoid valve circuit
C1052		Outlet solenoid valve circuit
C1055	LR	Inlet solenoid valve circuit
C1056		Outlet solenoid valve circuit
C1057	Power source	
C1061	ABS pump motor and/or motor relay circuit	
C1063	Fail-safe relay	
C1071	ABS control module	

Scan Tool Data

The parameter deta in the table below are values measured with the scan tool when the vehicle is under the following conditions. When taking measurements for comparison by using the scan tool, be sure to check that the vehicle is under the following conditions.

- Apply parking brake and block wheels.
- Ignition switch ON.
- Turn OFF air conditioner (if equipped).
- Apply no load to power steering (‘if equipped). (Don’t turn it)
- Turn OFF all electric loads (except ignition).
- No DTC.
- ABS is not operated. (Normal braking operation)

Scan Tool Data	Standards	Condition
RF WHEEL SPEED	0 km/h, 0 MPH	Vehicle stop
LF WHEEL SPEED	0 km/h, 0 MPH	Vehicle stop
RR WHEEL SPEED	0 km/h, 0 MPH	Vehicle stop
LR WHEEL SPEED	0 km/h, 0 MPH	Vehicle stop
G SENSOR	0G (4WD)	Place vehicle on the level
	–2.5 G (2WD)	
BATTERY VOLT	10 – 17 V	–
PUMP MOTOR RELAY	0 V	–
BRAKE SWITCH	ON	Brake pedal depressed
	OFF	Brake pedal released

Scan Tool Data Definition

RF Wheel Speed, LF Wheel Speed, RR Wheel Speed and LF Wheel Speed (Km/h, MPH): Wheel speed is an ABS control module internal parameter. It is computed by reference pulses from the Wheel Speed Sensor.
G Sensor (G): The G-Sensor converts gravity during the vehicle acceleration/deceleration into a voltage conditions and controls the ABS for 4WD vehicle.
Battery Volt (V): Battery Voltage is an analog input signal read by the ABS control module.
Certain ABS control module functions will be modified if the battery voltage falls below or rises above programmed thresholds.
Pump Motor Relay (V): This parameter indicates the operational condition of the Pump Motor Relay (Transistor).
Brake Switch (ON, OFF): This switch signal informs the ABS control module whether the brake is active or not.

Serial Data Link Circuit Check

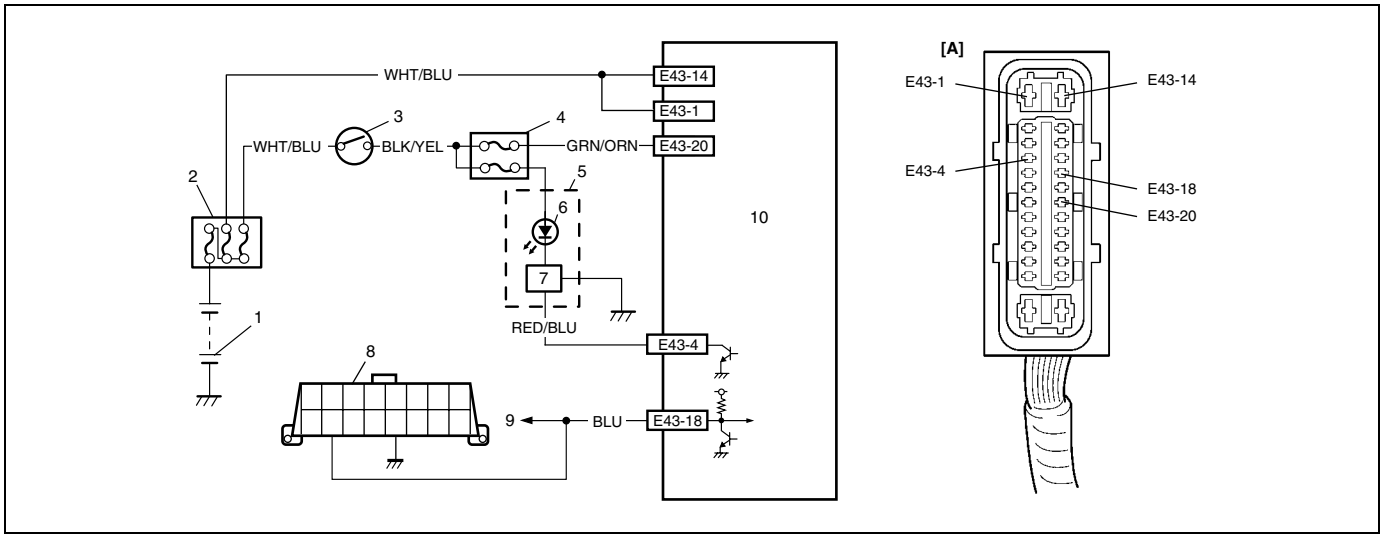

1. Battery	4. Circuit fuse	7. Lamp driver module	10. ABS hydraulic unit/control module assembly
2. Main fuse	5. Combination meter	8. Data link connector (DLC)	
3. Ignition switch	6. "ABS" warning lamp	9. To ECM, TCM, P/S control module and SDM	

INSPECTION

Step	Action	Yes	No
1	Was "ABS Diagnostic Flow Table" performed?	Go to Step 2.	Go to "ABS Diagnostic Flow Table" in this section.
2	1) Make sure that Suzuki Scan Tool is free from malfunction and correct PC card. 2) Turn ignition switch to OFF position. 3) Check proper connection of Suzuki Scan Tool to DLC. Is connection in good condition?	Go to Step 3.	Properly connect Suzuki Scan Tool to DLC.
3	1) Check if communication is possible by trying communication with other controller (ECM, TCM, P/S control module or SDM). Is it possible to communicate with other controller?	Go to Step 4.	Repair open in common section of serial data circuit ("BLU" wire circuit) used by all controllers or short to ground or power circuit which has occurred somewhere in serial data circuit ("BLU" wire circuit).
4	1) With ignition switch OFF position, disconnect ABS hydraulic unit/control module connector from ABS hydraulic unit/control module. 2) Check proper connection at "E43-18" ("BLU" wire) terminal for serial data circuit. 3) If OK, then check resistance between "E43-18" ("BLU" wire) terminal and "W/R" wire terminal for serial data circuit in DLC. Is resistance 1 Ω or less?	Substitute a known-good ABS hydraulic unit/control module and recheck.	Repair high resistance or open in "BLU" wire circuit for ANTI LOCK BRAKE system.

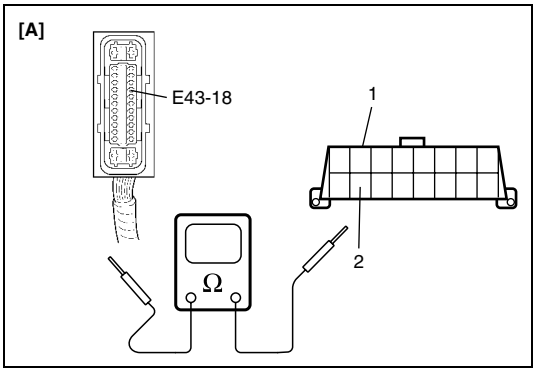

[A]:	Fig. for Step 4
1.	DLC
2.	“BLU” wire terminal

DTC C1015 – G Sensor Circuit

DESCRIPTION

If the signal voltage of G sensor while at a stop does not vary from that while running, this DTC is set.
Therefore, this DTC may be set when a vehicle is lifted up and its wheel(s) is turned. In such case, clear the DTC and check again.

INSPECTION

1) Ignition switch OFF.
2) Check for proper connection from harness to control module.
3) If OK, substitute an ABS hydraulic unit/control module assembly with correct part number.
4) Recheck system.

DTC C1021, DTC C1022 – Right-Front Wheel Speed Sensor Circuit or Sensor Ring

DTC C1025, DTC C1026 – Left-Front Wheel Speed Sensor Circuit or Sensor Ring

DTC C1031, DTC C1032 – Right-Rear Wheel Speed Sensor Circuit or Sensor Ring

DTC C1035, DTC C1036 – Left-Rear Wheel Speed Sensor Circuit or Sensor Ring

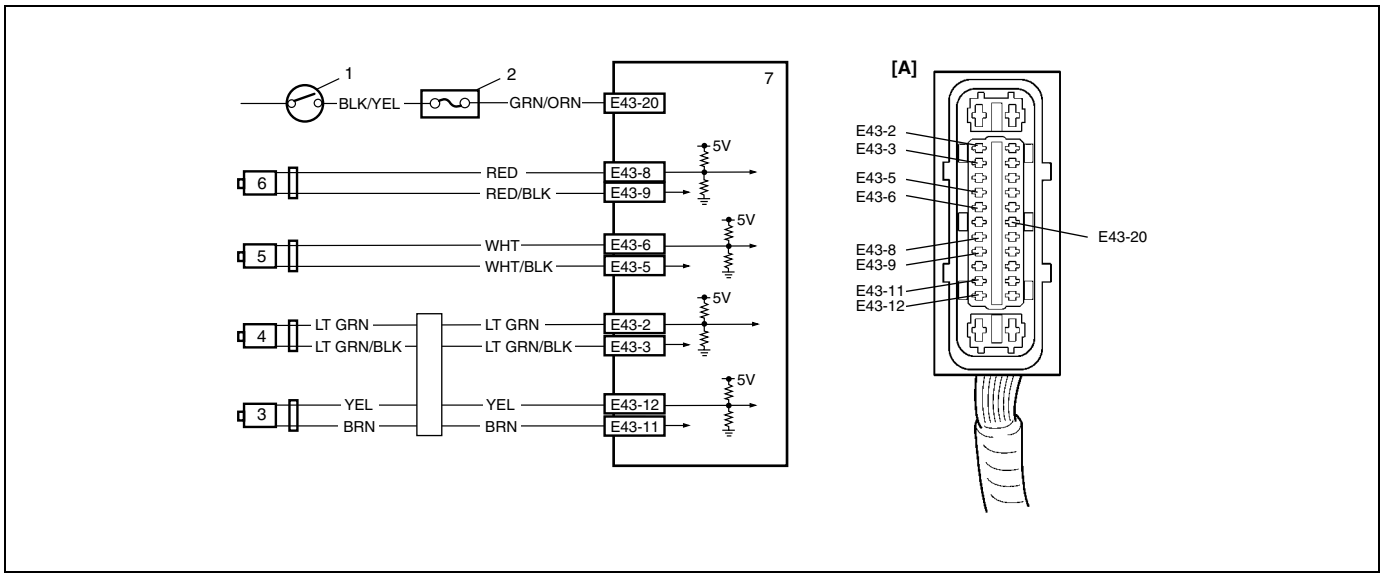

[A]: ABS hydraulic unit/control module connector E43	3. Right-rear wheel speed sensor	6. Left-front wheel speed sensor
1. Ignition switch	4. Left-rear wheel speed sensor	7. ABS hydraulic unit/control module assembly
2. Circuit fuse	5. Right-front wheel speed sensor	

DESCRIPTION

The ABS control module monitors the voltage at the terminal of each sensor while the ignition switch is ON. When the voltage is not within the specified range, an applicable DTC will be set. Also, when no sensor signal is inputted at starting or while running, an applicable DTC will be set.

NOTE:

When the vehicle was operated in any of the following ways, one of these DTCs may be set even when the sensor is in good condition. If such possibility is suspected, repair the trouble (dragging of brake, etc.) of the vehicle, clear DTC once and then after performing the driving test as described in Step 2 of "ABS Diagnosis Flow Table", check whether or not any abnormality exists.

- **The vehicle was driven with parking brake pulled.**
- **The vehicle was driven with brake dragging.**
- **Wheel spin occurred while driving.**
- **Wheel(s) was turned while the vehicle was jacked up.**
- **The vehicle was stuck.**

INSPECTION

Step	Action	Yes	No
1	Was “ABS Diagnostic Flow Table” performed?	Go to Step 2.	Go to “ABS Diagnostic Flow Table” in this section.
2	1) Disconnect applicable ABS wheel speed sensor coupler with ignition switch OFF. 2) Measure resistance between terminals of ABS wheel speed sensor. Refer to “Front Wheel Speed Sensor Inspection” and/or “Rear Wheel Speed Sensor Inspection” in this section. Is measured resistance value as specified?	Go to Step 3.	Replace ABS wheel speed sensor assembly.
3	1) Turn ignition switch OFF. 2) Disconnect ABS hydraulic unit/control module connector. 3) Check for proper connection to ABS control module at each sensor terminal. 4) If OK, then turn ignition switch ON and measure voltage between sensor terminal of module connector and body ground. Is it 0V?	Go to Step 4.	ABS wheel speed sensor circuit shorted to power.
4	1) Turn ignition switch OFF. 2) Connect ABS wheel speed sensor coupler. 3) Measure resistance between the following points. • Both ABS hydraulic unit/control module connector terminals of the corresponding sensor. This check result should be the same as above Step 1. • Either terminal of wheel speed sensor coupler and body ground. This check result should be no continuity. Are both check results OK?	Go to Step 5.	Circuit open or shorted to ground.
5	1) Remove applicable ABS wheel speed sensor. 2) Check sensor for damage or foreign material attached. Is it in good condition?	Go to Step 6.	Clean, repair or replace.
6	Check front and/or rear sensor ring for the following (remove rear drum as necessary): • Rotor serration (teeth) neither missing nor damaged. • No foreign material being attached. • Rotor not being eccentric. • Wheel bearing free from excessive play. Are they in good condition?	Go to Step 7.	Clean, repair or replace.
7	1) Install ABS wheel speed sensor to knuckle. 2) Tighten sensor bolt to specified torque and check that there is no clearance between sensor and knuckle. Is it OK?	Go to Step 8.	Replace ABS wheel speed sensor.
8	Refer to “Reference” of “Front Wheel Speed Sensor On-Vehicle Inspection” and/or “Reference” of “Rear Wheel Speed Sensor On-Vehicle Inspection” in this section, check output voltage or waveform. Is specified voltage and/or waveform obtained?	Substitute a known-good ABS hydraulic unit/control module assembly and recheck.	Replace sensor and recheck.

DTC C1041 – Right-Front Inlet Solenoid Circuit
DTC C1045 – Left-Front Inlet Solenoid Circuit
DTC C1051 – Right-Rear Inlet Solenoid Circuit
DTC C1055 – Left-Rear Inlet Solenoid Circuit
DTC C1042 – Right-Front Outlet Solenoid Circuit
DTC C1046 – Left-Front Outlet Solenoid Circuit
DTC C1052 – Right-Rear Outlet Solenoid Circuit
DTC C1056 – Left-Rear Outlet Solenoid Circuit

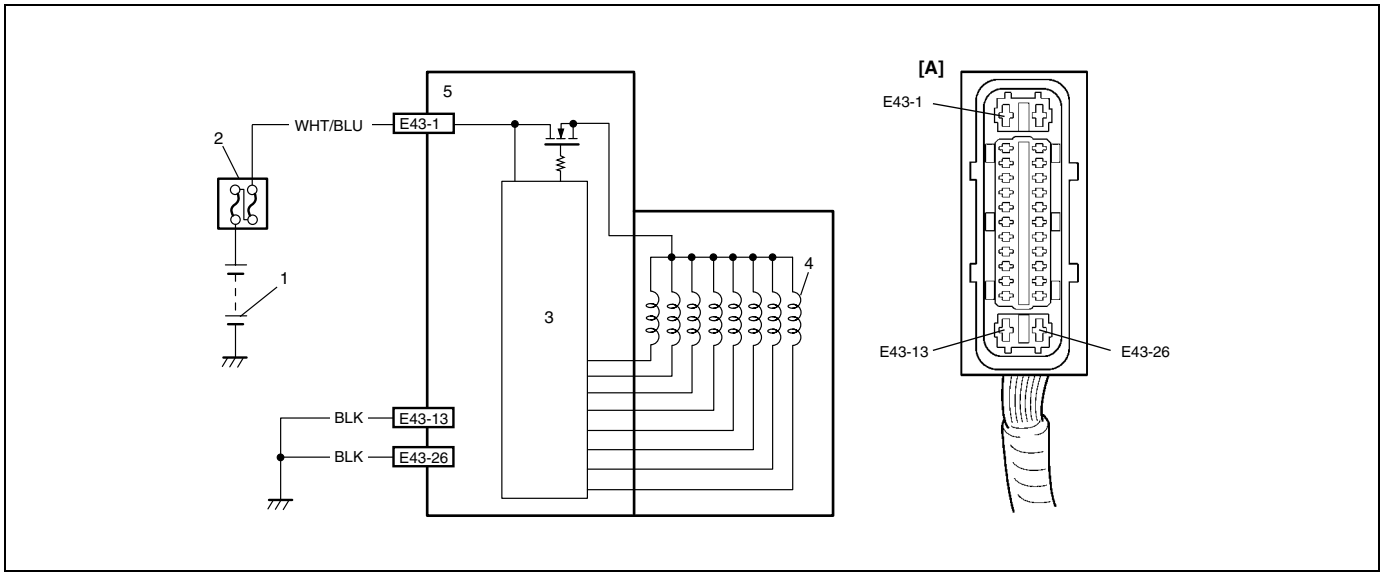

[A]: ABS hydraulic unit/control module assembly connector E43	2. Main fuse	4. Solenoid valve
1. Battery	3. ABS power control module	5. ABS hydraulic unit/control module assembly

DESCRIPTION

The ABS control module monitors the output from the valve.
When the output of each valve exceeds the specified value compared with the signal sent from ABS control module, this DTC is set.

INSPECTION

Step	Action	Yes	No
1	Was “ABS Diagnostic Flow Table” performed?	Go to Step 2.	Go to “ABS Diagnostic Flow Table” in this section.
2	1) Check solenoid operation referring to item “ABS Hydraulic Unit Operation Check” in this section. Is it in good condition?	Check terminal “E43-1” connection. If connection is OK, substitute a known-good ABS hydraulic unit/control module assembly and recheck.	Go to Step 3.

Step	Action	Yes	No
3	1) Turn ignition switch to OFF position. 2) Disconnect ABS hydraulic unit/control module connector. 3) Check for proper connection to ABS hydraulic unit/control module connector at terminal “E43-1”. 4) If OK, then measure voltage between terminal “E43-1” of module connector and “E43-13 and 26”. Is it 10 – 14 V?	Substitute a known-good ABS hydraulic unit/control module assembly and recheck.	“WHT/BLU” or “BLK” circuit open.

DTC C1057 – Power Source Circuit

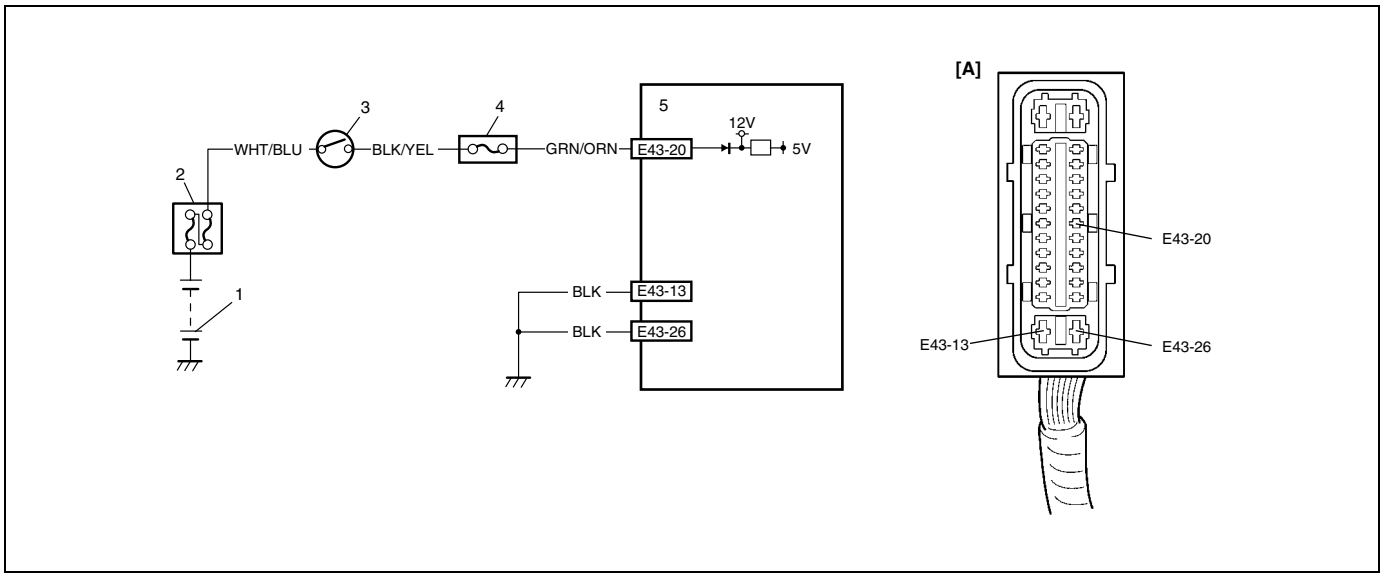

[A]: ABS hydraulic unit/control module connector E43	2. Main fuse	4. Circuit fuse
1. Battery	3. Ignition switch	5. ABS hydraulic unit/control module assembly

DESCRIPTION

The ABS control module monitors the power source voltage at terminal “E43-20”. When the power source voltage becomes extremely high or low, this DTC will be set. As soon as the voltage rises or lowers to the specified level, the set DTC will be cleared.

INSPECTION

Step	Action	Yes	No
1	Was “ABS Diagnostic Flow Table” performed?	Go to Step 2.	Go to “ABS Diagnostic Flow Table” in this section.
2	1) Connect a voltmeter between battery positive (+) terminal and body ground. 2) Start the engine and measure the maximum voltage when racing the engine. Is it over 18 V?	Check charging system referring to “Overcharged battery” in Section 6H.	Go to Step 3.
3	1) Disconnect ABS hydraulic unit/control module connector. 2) Keep the engine idling, measure the voltage between terminal “E43-20” of ABS control module and body ground. Is it always under 9 V?	Check charging system referring to “Undercharged battery” in Section 6H. Imperfect short between wire “GRN/ORN” and ground.	Poor connection of terminal “E43-20” or “E43-13 and 26” of the ABS control module. If the above are in good condition, substitute a known-good ABS hydraulic unit/control module and recheck.

DTC C1061 – ABS Pump Motor Circuit

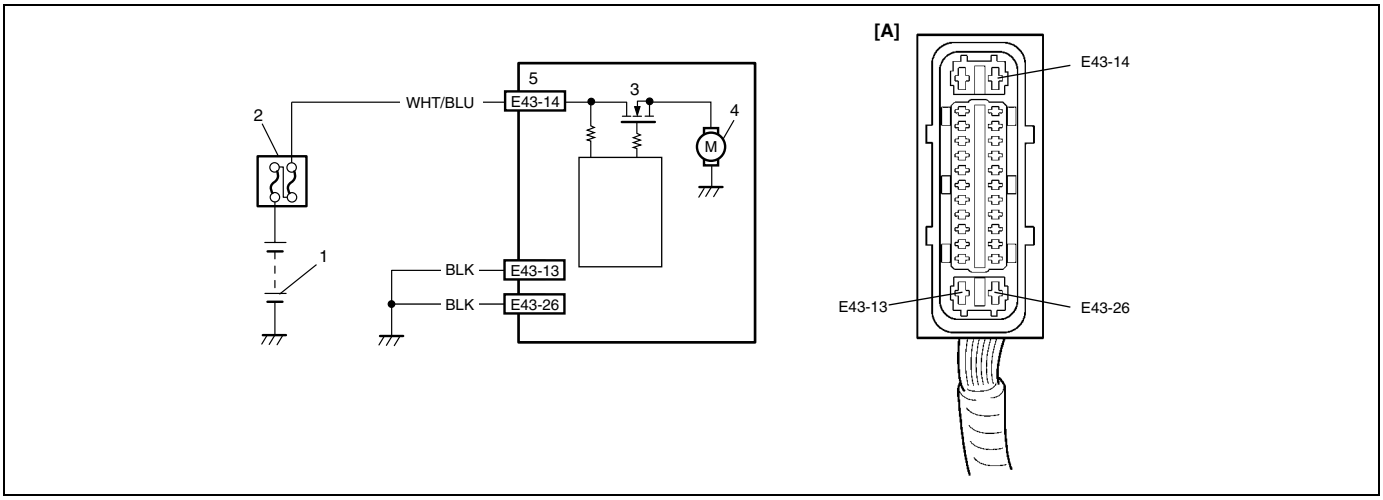

[A]: ABS hydraulic unit/control module connector E43	2. Main fuse	4. ABS pump motor
1. Battery	3. Pump motor relay (transistor)	5. ABS hydraulic unit/control module assembly

DESCRIPTION

The ABS control module monitors the voltage at monitor terminal of pump motor circuit constantly with the ignition switch turned ON. It sets this DTC when the voltage at the monitor terminal does not become high/low according to ON/OFF commands to the motor relay (transistor) of the module (does not follow these commands).

INSPECTION

Step	Action	Yes	No
1	Was “ABS Diagnostic Flow Table” performed?	Go to Step 2.	Go to “ABS Diagnostic Flow Table” in this section.
2	1) Check pump motor referring to “ABS Hydraulic Unit Operation Check” in this section. Is it in good condition?	Check terminals “E43-14” and “E43-13 and 26” connection. If connections OK, substitute a known-good ABS hydraulic unit/control module assembly and recheck.	Go to Step 3.
3	1) Turn Ignition switch to OFF position. 2) Disconnect ABS hydraulic unit/control module connector. 3) Check for proper connection to ABS hydraulic unit/control module connector at terminal “E43-14”. 4) If OK, then measure voltage between terminal “E43-14” of module connector and body ground. Is it 10 – 14 V?	Go to Step 4.	“WHT/BLU” circuit open.
4	Measure resistance between terminal “E43-13 and 26” of ABS hydraulic unit/control module connector and body ground. Is it infinite (∞)?	“BLK” circuit open.	Substitute a known-good ABS hydraulic unit/control module assembly and recheck.

DTC C1063 – ABS Fail-Safe Relay Circuit

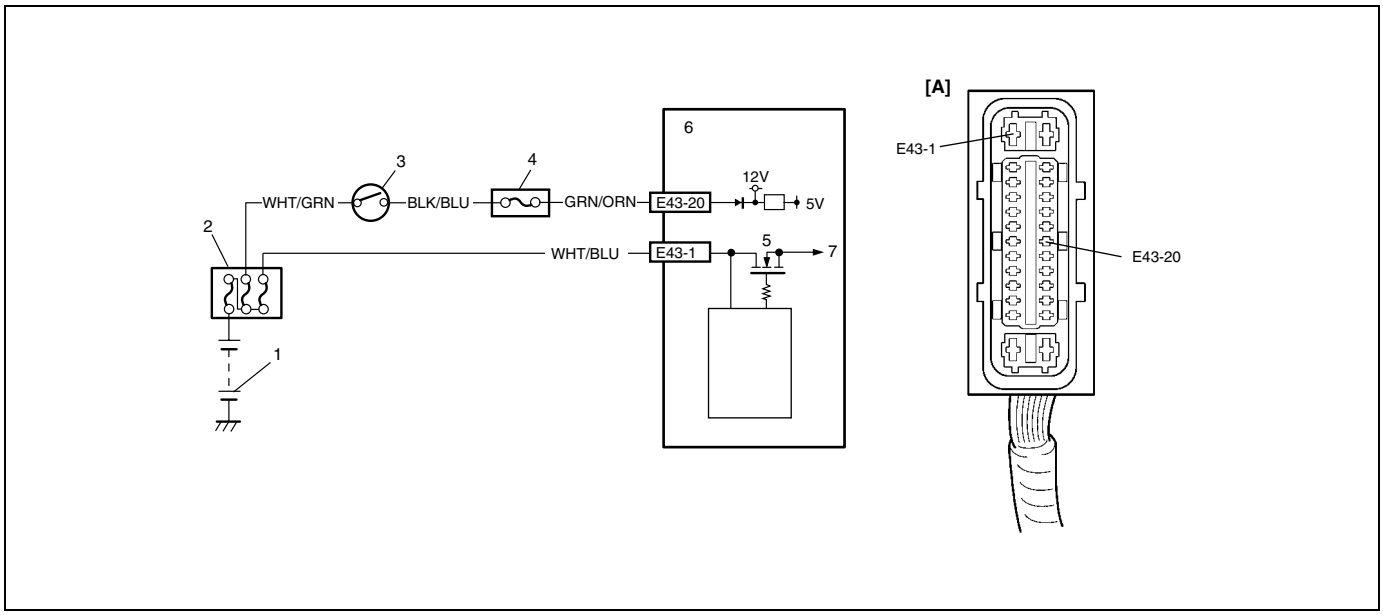

[A]: ABS hydraulic unit/control module connector E43	2. Main fuse	4. Circuit fuse	6. ABS hydraulic unit/control module assembly
1. Battery	3. Ignition switch	5. Fail safe relay (transistor)	7. To solenoid valve

DESCRIPTION

ABS control module monitors the voltage at the terminal of solenoid circuit constantly with ignition switch turned ON. Also, immediately after ignition switch is turned ON, perform initial check as follows.
Switch fail-safe relay (transistor) in the order of OFF → ON and check if voltage changes to Low → High. If anything faulty is found in the initial check and when the voltage is low with ignition switch turned ON, this DTC will be set.

INSPECTION

Step	Action	Yes	No
1	Was “ABS Diagnostic Flow Table” performed?	Go to Step 2.	Go to “ABS Diagnostic Flow Table” in this section.
2	Check battery voltage. Is it about 11 V or higher?	Go to Step 3.	Check charging system referring to “Undercharged battery” in Section 6H.
3	Check ABS main fuse and connection. Is it in good condition?	Go to Step 4.	Repair and/or replace fuse.
4	1) Turn ignition switch to OFF position. 2) Disconnect ABS hydraulic unit/control module connector. 3) Check proper connection to ABS hydraulic unit/control module at terminal “E43-1”. 4) If OK, then measure voltage between connector terminal “E43-1” and body ground. Is it 10 – 14 V?	Substitute a known-good ABS hydraulic unit/control module assembly and recheck.	“WHT/BLU” circuit open or short to ground.

DTC C1071 – ABS Control Module

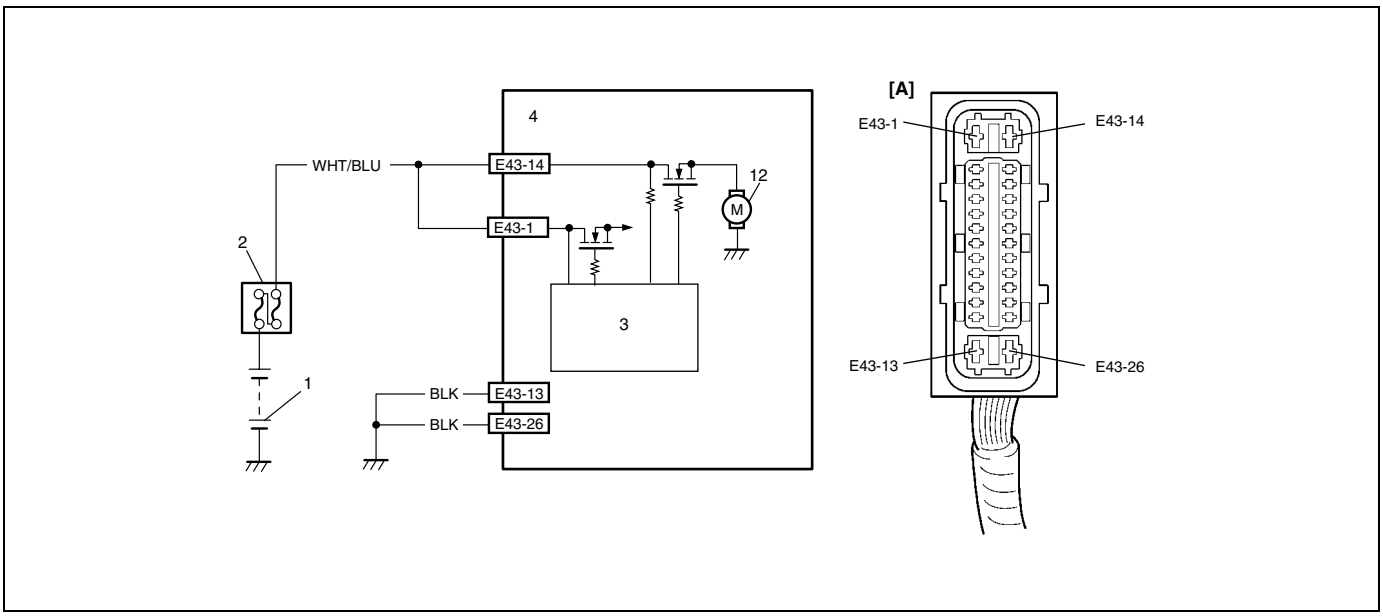

[A]: ABS hydraulic unit/control module connector E43	2. Main fuse	4. ABS hydraulic unit/control module assembly
1. Battery	3. ABS power control module	

DESCRIPTION

This DTC will be set when an internal malfunction is detected in the ABS control module.

INSPECTION

Step	Action	Yes	No
1	Was “ABS Diagnostic Flow Table” performed?	Go to Step 2.	Go to “ABS Diagnostic Flow Table” in this section.
2	Clear all DTCs and check DTC. Is it DTC C1071?	Go to Step 3.	Could be a temporary malfunction of the ABS control module.
3	1) Check proper connection of ABS hydraulic unit/control module connector. 2) If OK, disconnect ABS hydraulic unit/control module connector and check the followings. • Voltage “E43-14” terminal: 10 – 14 V • Resistance between “E43-13 and 26” and body ground: Continuity Are the check result as specified above?	Replace ABS hydraulic unit/control module assembly.	Repair and recheck.

On-Vehicle Service

Precautions

When connector is connected to ABS hydraulic unit/control module assembly, do not disconnect connectors of sensors with ignition switch ON. Then DTC will be set in ABS control module.

ABS Hydraulic Unit Operation Check

1) Check that basic brake system other than ABS is in good condition.
2) Check that battery voltage is 11 V or higher.
3) Lift up vehicle.
4) Set transmission to neutral and release parking brake.
5) Turn each wheel gradually by hand to check if brake dragging occurs. If it does, correct.

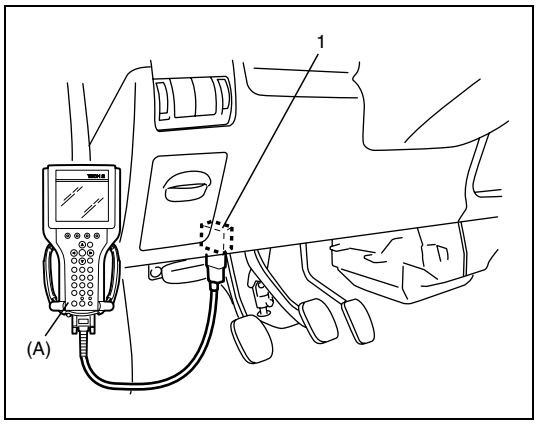

6) Connect Suzuki Scan Tool to data link connector (DLC) (1) with ignition switch OFF.

Special tool
(A): Suzuki Scan Tool

7) Turn ignition switch to ON position and select menu to "HYDRAULIC CONTROL TEST" under "miscellaneous test" ("MISC. TEST") mode of Suzuki Scan Tool.

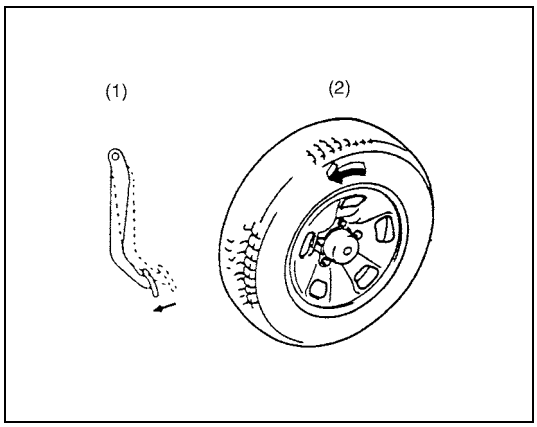

8) Perform the following checks with help of another person.
   Brake pedal (1) should be depressed and then select testing wheel by Suzuki Scan Tool and the wheel (2) should be turned by another person's hand. At this time, check that:
   - Operation sound of solenoid is heard and the wheel turns only about 0.5 sec. (Brake force is depressurized).
   - Operation sound of pump motor is heard and pulsation is felt at brake pedal.
9) Check for all 4-wheels condition respectively. If a faulty condition is found, replace hydraulic unit/control module assembly.
10) After completing the check, turn ignition switch to OFF position and disconnect Suzuki Scan Tool from DLC.

ABS Hydraulic Unit/Control Module Assembly Components

CAUTION:

Never disassemble ABS hydraulic unit/control module assembly, loosen blind plug or remove motor. Performing any of these prohibited services will affect original performance of ABS hydraulic unit/ control module assembly.

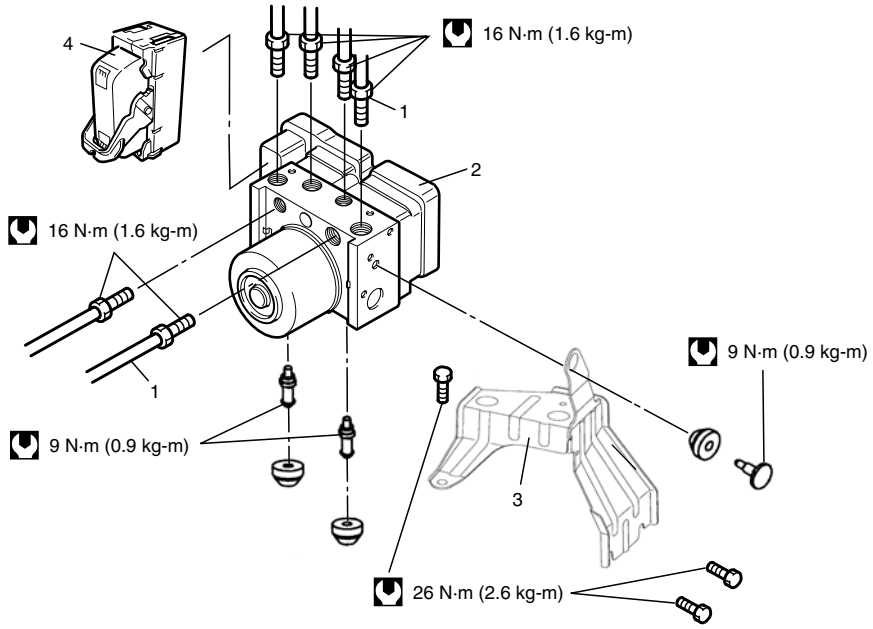

1. Brake pipe	3. Bracket
2. ABS hydraulic unit/control module assembly	4. Connector

ABS Hydraulic Unit Control Module Inspection

Check hydraulic unit for fluid leakage.
If any, repair or replace.

ABS Hydraulic Unit/Control Module Removal and Installation

Removal

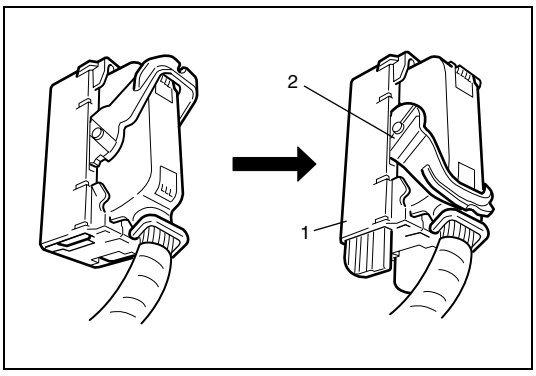

1) Disconnect negative cable from battery.
2) Disconnect ABS hydraulic unit/control module assembly connector (1) by turning down lock (2).

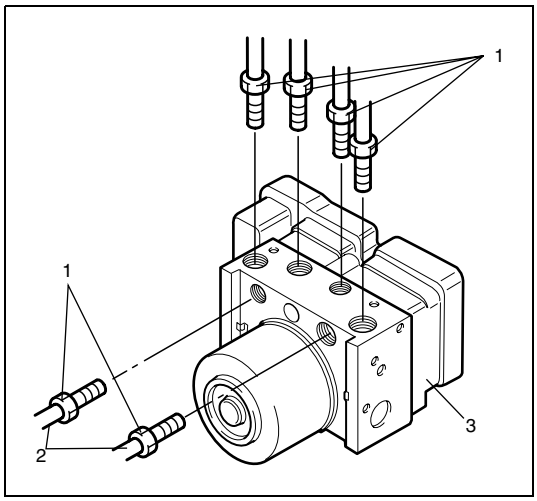

3) Using special tool, loosen flare nuts (1) and disconnect brake pipes (2) from ABS hydraulic unit/control module assembly (3).

Special tool
: 09950-78220

NOTE:

Put bleeder plug cap onto pipe to prevent fluid from spilling. Do not allow brake fluid to get on painted surfaces.

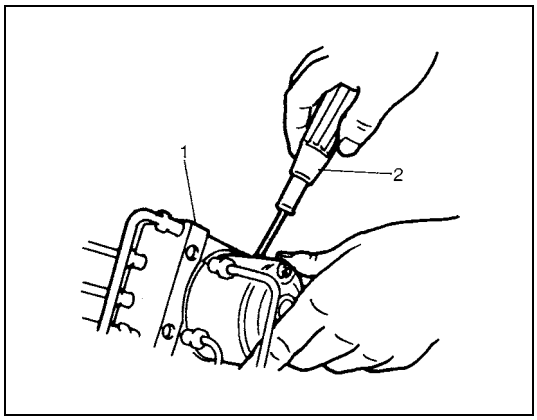

4) Remove one screw and disconnect take out ABS hydraulic unit/control module assembly (1) from bracket using screwdriver (2).

CAUTION:

- **Do not give an impact to hydraulic unit.**
- **Use care not to allow dust to enter hydraulic unit.**
- **Do not place hydraulic unit on its side or upside down. Handling it in inappropriate way will affect its original performance.**

Installation

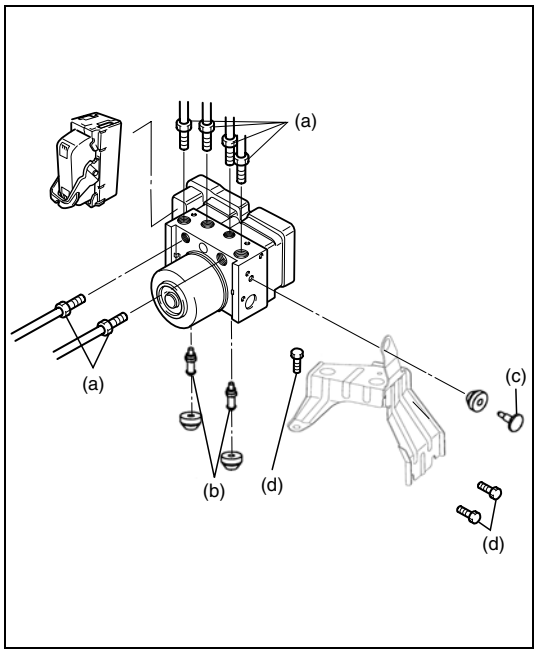

1) Install hydraulic unit by reversing removal procedure.

Tightening torque
(a): 16 N·m (1.6 kg-m, 11.5 lb-ft)
(b): 9 N·m (0.9 kg-m, 6.5 lb-ft)
(c): 9 N·m (0.9 kg-m, 6.5 lb-ft)
(d): 26 N·m (2.6 kg-m, 18.0 lb-ft)

2) Bleed air from brake system referring to “Air Bleeding of Brake System” in Section 5.
3) Check each installed part for fluid leakage and perform “ABS Hydraulic Unit Operation Check” in this section.

NOTE:

For new ABS hydraulic unit/control module assembly, if “ABS Hydraulic Unit Operation Check” procedure has not been performed, “ABS” warning lamp may flash when ignition switch is turned ON position.

Front Wheel Speed Sensor Components

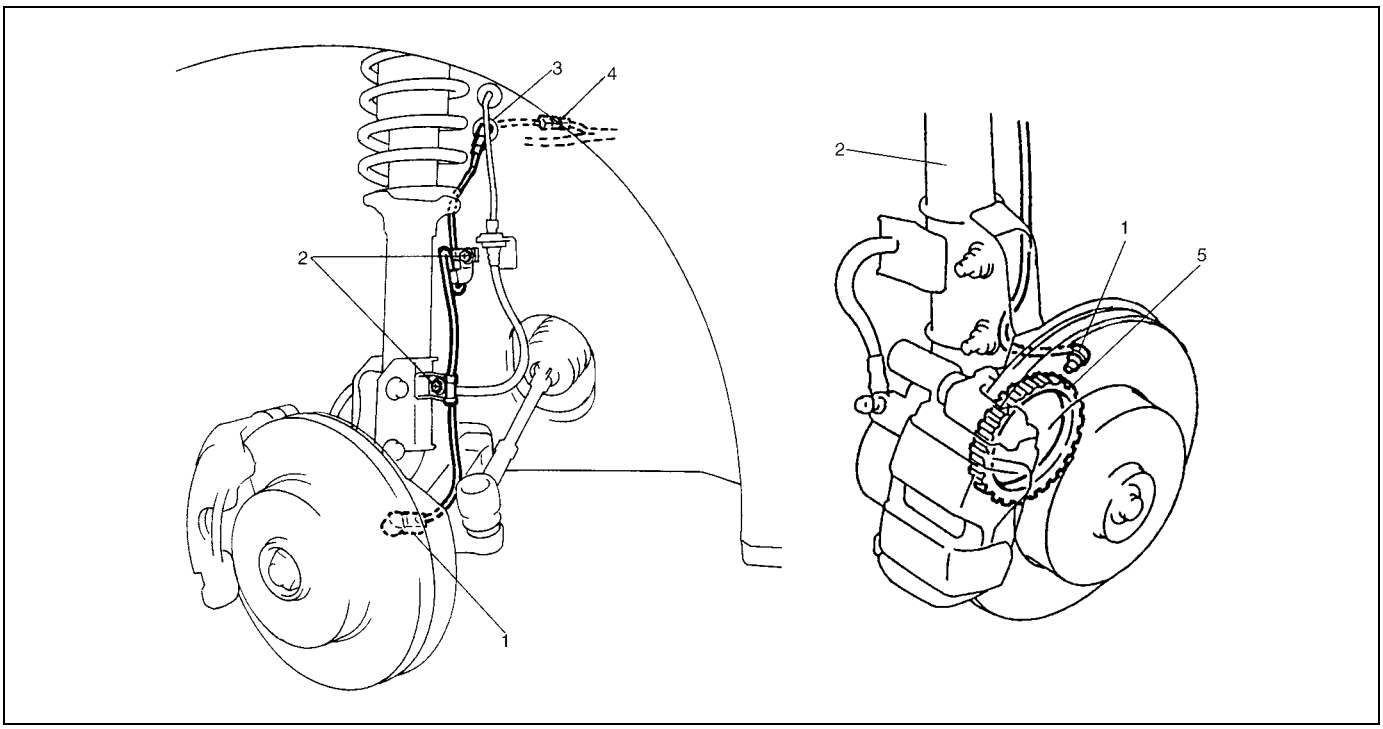

1. Left front wheel speed sensor	3. Grommet	5. Sensor ring
2. Clamp bolt	4. Connector	

Front Wheel Speed Sensor On-Vehicle Inspection

Output Voltage Inspection

1) Turn ignition switch OFF.
2) Hoist vehicle a little.
3) Disconnect wheel speed sensor connector.
4) Disconnect wheel speed sensor grommet from vehicle body.

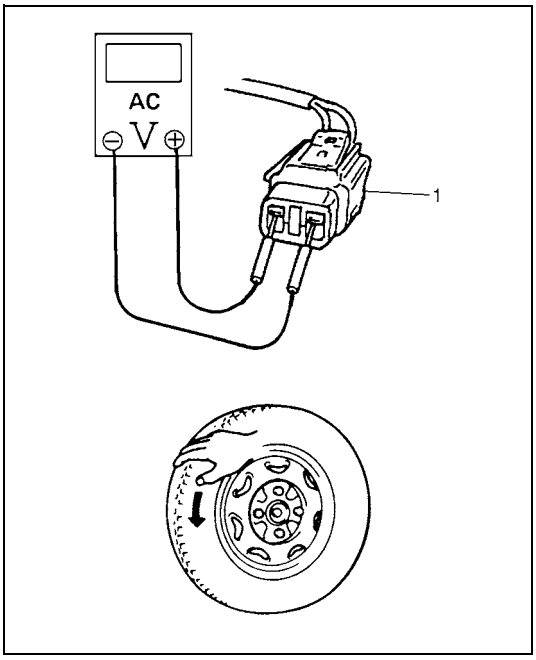

5) Connect voltmeter between connector (1) terminals.
6) While turning wheel by hand at a speed of approximately 1 full rotation to 1 1/3 rotation per second, check AC voltage of sensor.

Output AC voltage at 1 to 1 1/3 rotation per second
: 100 mV or more

7) If measured voltage is not as specified, check sensor, rotor and their installation conditions.

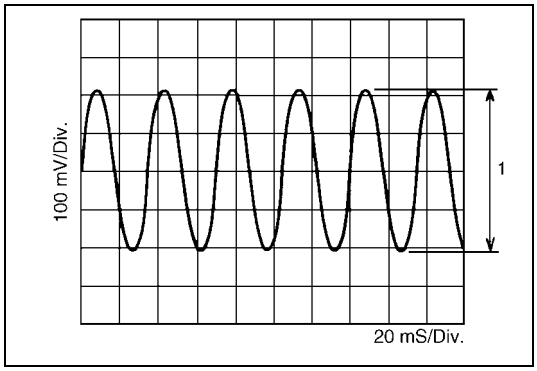

Reference

When using oscilloscope for this check, check if peak-to-peak voltage (1) meets specification and waveform is complete.

Peak-to-peak voltage at 1 to 1 1/3 rotation per second : 280 mV or more at 43 – 57 Hz

Front Wheel Speed Sensor Removal and Installation

Removal

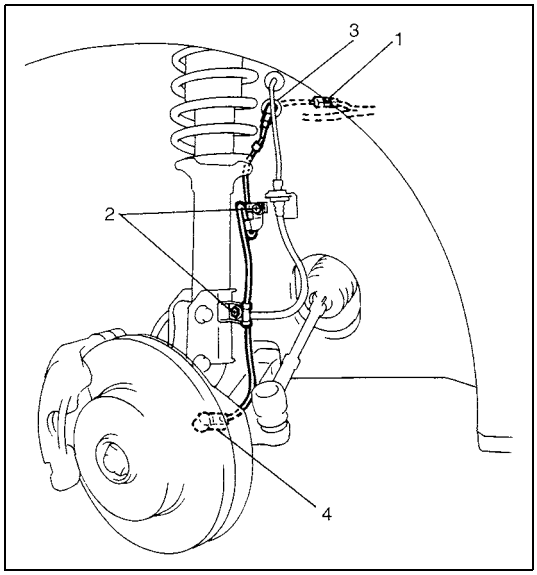

1) Disconnect negative cable at battery.
2) Disconnect front wheel speed sensor coupler (1).
3) Hoist vehicle and remove wheel.
4) Remove harness clamp bolts (2) and grommet (3).
5) Remove front wheel speed sensor (4) from knuckle.

CAUTION:
- **Do not pull wire harness when removing front wheel speed sensor.**
- **Do not cause damage to surface of front wheel speed sensor and do not allow dust, etc. to enter its installation hole.**

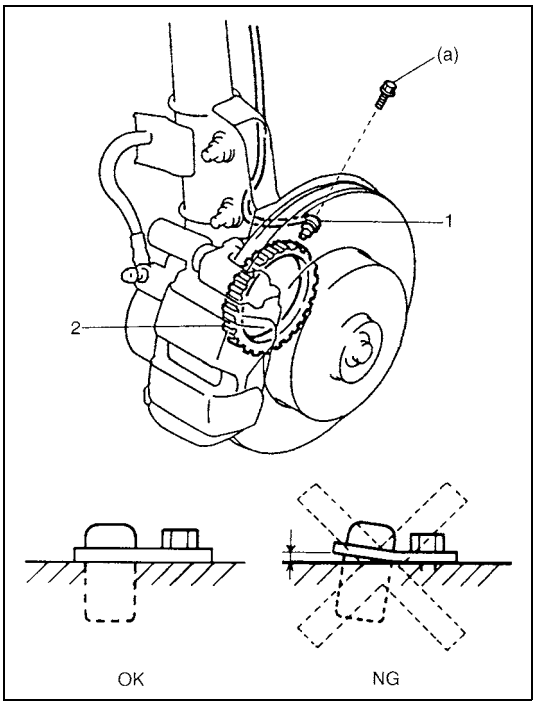

Installation

1) Check that no foreign material is attached to sensor (1) and sensor ring (2).
2) Install it by reversing removal procedure.

Tightening torque
Front wheel speed sensor bolt
(a): 10 N·m (1.0 kg-m, 7.5 lb-ft)

CAUTION:
Do not pull or twist wire harness more than necessary when installing front wheel speed sensor.

3) Check that there is no clearance between sensor and knuckle.

Front Wheel Speed Sensor Inspection

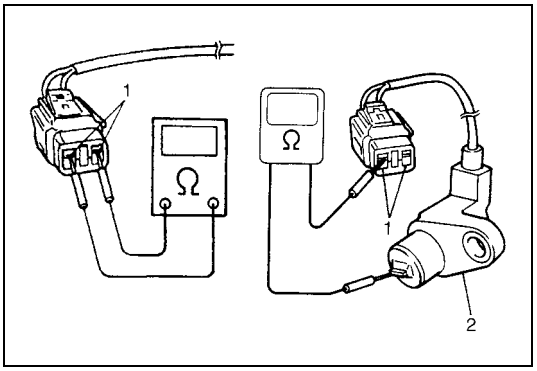

- Check sensor for damage.
- Check sensor for resistance and continuity.

Between both terminals (1) sensor
: 1.2 – 1.6 kΩ at 20°C (68°F)

Between sensor terminal and sensor body (2)
: No continuity

- If the check result is not as specified and any malfunction is found, replace.

Front Wheel Speed Sensor Ring Removal and Installation

NOTE:
The front wheel sensor ring can not be removed or replaced alone. If front wheel sensor ring needs to be replaced, replace it as a wheel side joint assembly of drive shaft.

For removal and installation of wheel side joint assembly of drive shaft, refer to “Front Drive Shaft Assembly Removal and Installation” in Section 4A.

Front Wheel Speed Sensor Ring Inspection

- Check ring for being missing, damaged or deformed.
- Turn drive shaft and check if ring rotation is free from eccentricity and looseness.
- Check that no foreign material is attached.

If any faulty is found, repair or replace. Refer to “Front Drive Shaft Assembly Removal and Installation” in Section 4A.

Rear Wheel Speed Sensor Components

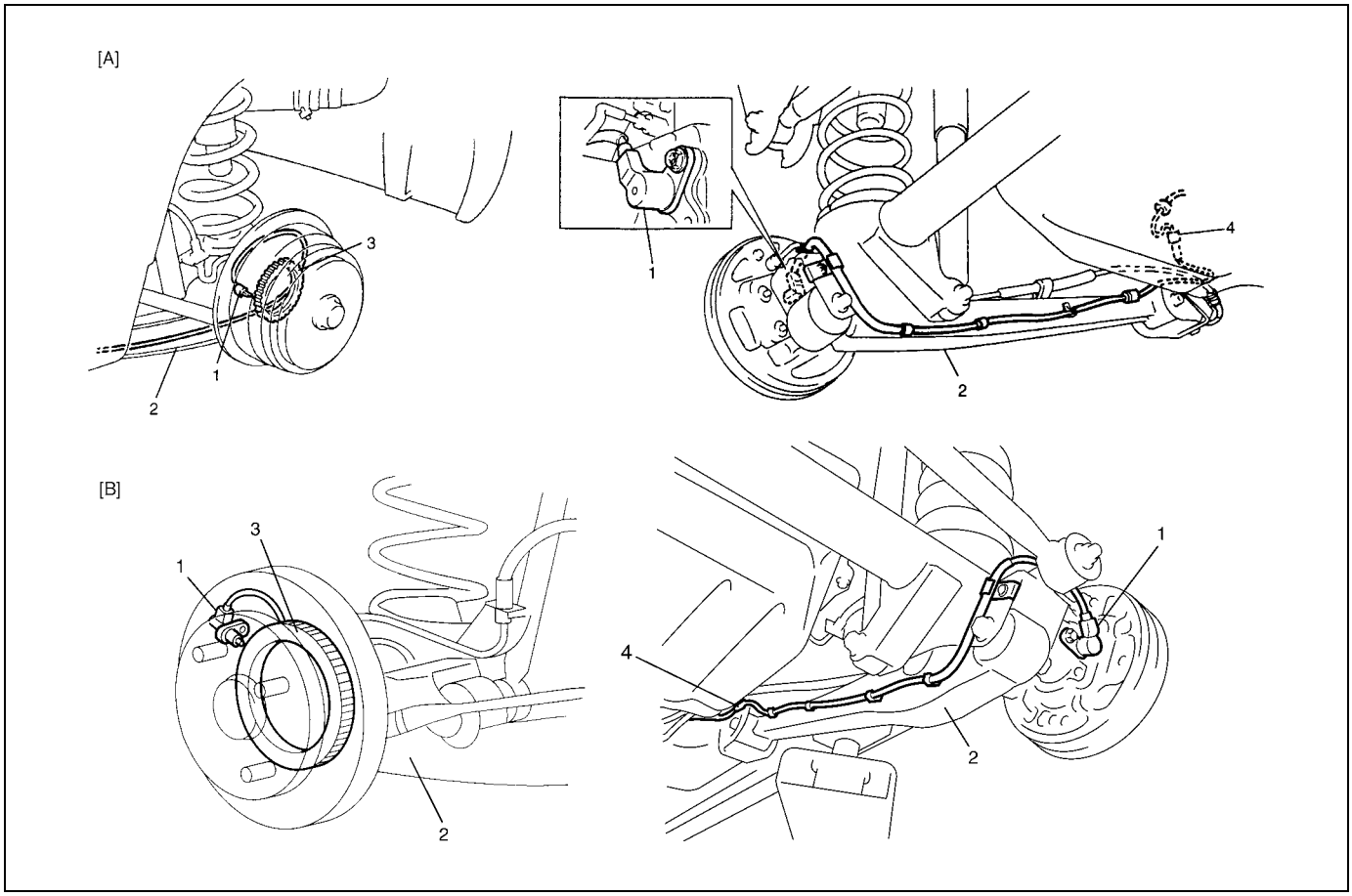

[A]: For 2WD	1. Left rear wheel sensor	3. Sensor ring	5. Right rear wheel sensor	7. Forward
[B]: For 4WD	2. Trailing arm	4. Sensor coupler	6. Rear axle housing	8. Vehicle inside

Rear Wheel Speed Sensor On-Vehicle Inspection

Output Voltage Inspection

1) Turn ignition switch OFF.
2) Remove rear seat referring to Section 9.
3) Turn over floor carpet.
4) Hoist vehicle.
5) Disconnect connector of wheel speed sensor.

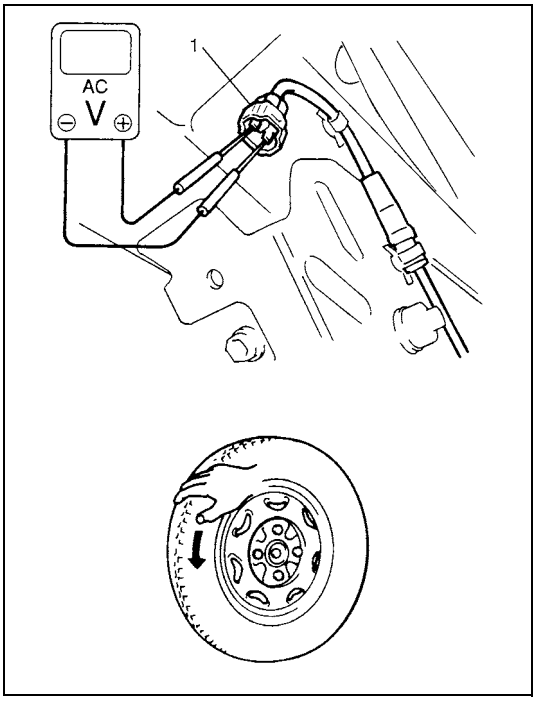

6) Connect voltmeter between connector (1) terminals.
7) While turning wheel at a speed of approximately 1 rotation to 1 1/3 rotation per second, check AC voltage of sensor.

Output AC voltage at 1 to 1 1/3 rotation per second
100 mV or more

8) If measured voltage is not as specified, check sensor, rotor and their installation conditions.

Reference

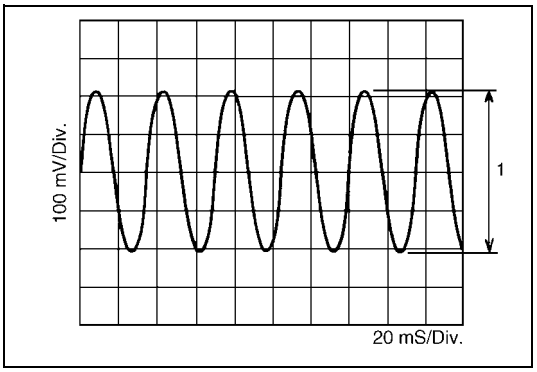

When using oscilloscope for this check, check if peak-to-peak voltage (1) meets specification and waveform is complete.

Peak-to-peak voltage at 1 to 1 1/3 rotation per second
280 mV or more at 43 – 57 Hz

Rear Wheel Speed Sensor Removal and Installation

Removal

1) Disconnect negative cable from battery.
2) Hoist vehicle.

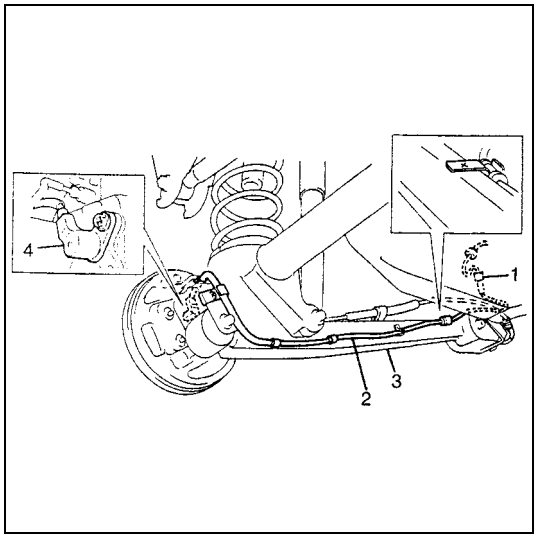

3) Disconnect rear wheel speed sensor coupler (1).
4) Detach ABS wheel sensor wire harness (2) from suspension frame (3).
   Do not detach clip of rear wheel speed sensor connector from vehicle body unless replacement is necessary.
5) Remove rear wheel speed sensor (4) from rear axle housing.

CAUTION:
- **Do not pull wire harness when removing rear wheel speed sensor.**
- **Do not cause damage to surface of rear wheel speed sensor and do not allow dust, etc. to enter its installation hole.**

Installation

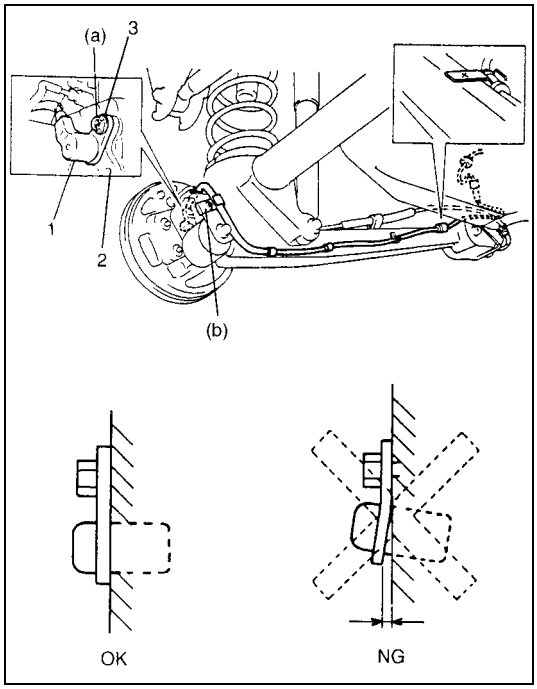

1) Check that no foreign material is attached to sensor (1) and ring.
2) Reverse removal procedure for installation noting the following.
   - There is another bolt hole (2) that is fit for wheel speed sensor bolt by proper bolt hole (3).
     Be sure to install wheel speed sensor and its bolt at the correct (upper) position as shown in figure.

Tightening torque
(a): 11 N·m (1.1 kg-m, 8.0 lb-ft)
(b): 2.5 N·m (0.25 kg-m, 1.8 lb-ft)

CAUTION:
Do not pull or twist wire harness more than necessary when installing rear wheel speed sensor.

3) Check that there is no clearance between sensor and rear axle shaft.

Rear Wheel Speed Sensor Inspection

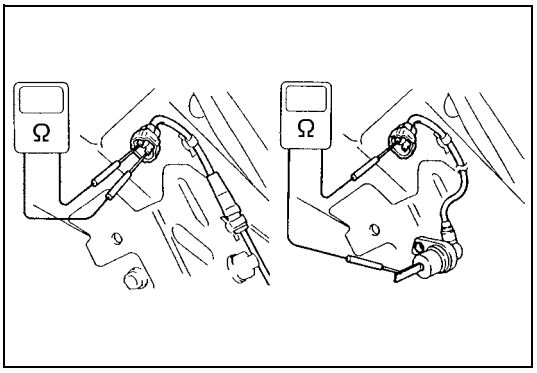

- Check sensor for damage.
- Check sensor for resistance and continuity.

Between both terminals of sensor
2WD vehicle: 0.9 – 1.3 kΩ at 20°C (68°F)
4WD vehicle: 1.2 – 1.6 kΩ at 20°C (68°F)

Between sensor terminal and sensor body
: No continuity

- If the check result is not as specified and any malfunction is found, replace.

Rear Wheel Speed Sensor Ring (For 2WD Vehicle) Removal and Installation

For removal, inspection and installation of rear wheel sensor ring, refer to “Brake Drum Removal and Installation (for 2WD Model)” in Section 5C.

Rear Wheel Speed Sensor Ring (For 2WD Vehicle) Inspection

For inspection of rear wheel speed sensor ring, refer to “Drum Brake Component Parts Inspection” in Section 5C.

Rear Wheel Speed Sensor Ring (For 4WD Vehicle) Removal and Installation

NOTE:

The rear wheel speed sensor ring can not be removed or replaced alone. If rear wheel speed sensor ring needs to be replaced, replace it as a retainer ring of rear axle shaft.

For removal and installation of retainer ring of rear axle shaft, refer to “Rear Axle Shaft and Wheel Bearing Removal and Installation (for 4WD Model)” in Section 3E.

Rear Wheel Speed Sensor Ring (For 4WD Vehicle) Inspection

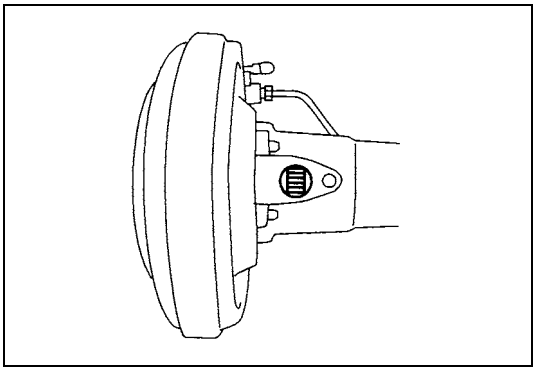

- Check rotor serration (teeth) for being missing damaged or deformed.
- Turn wheel and check if rotor rotation is free from eccentricity and looseness.
- Check that no foreign material is attached.
- If any faulty is found, repair or replace.

Special Tool

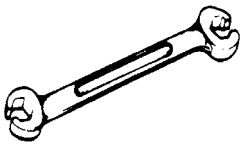	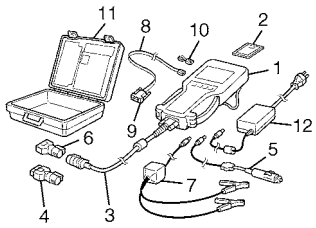
09950-78220 Flare nut wrench (10 mm)	Tech 2 kit (Suzuki Scan Tool) See NOTE below.

NOTE:

This kit includes the following items.
1. Tech 2, 2. PCMCIA card, 3. DLC cable, 4. SAE 16/19 adapter, 5. Cigarette cable, 6. DLC loopback adapter, 7. Battery power cable, 8. RS232 cable, 9. RS232 adapter, 10. RS232 loopback connector, 11. Storage case, 12. Power supply

SECTION 6

ENGINE GENERAL INFORMATION AND DIAGNOSIS

WARNING:

For vehicles equipped with a Supplemental Restraint (Air Bag) System:

- **Service on and around the air bag system components or wiring must be performed only by an authorized SUZUKI dealer. Refer to "System Components and Wiring Location View" under "General Description" in air bag system section in order to confirm whether you are performing service on or near the air bag system components or wiring. Please observe all WARNINGS and "Service Precautions" under "On-Vehicle Service" in air bag system section before performing service on or around the air bag system components or wiring. Failure to follow WARNINGS could result in unintentional activation of the system or could render the system inoperative. Either of these two conditions may result in severe injury.**
- **Technical service work must be started at least 90 seconds after the ignition switch is turned to the "LOCK" position and the negative cable is disconnected from the battery. Otherwise, the system may be activated by reserve energy in the Sensing and Diagnostic Module (SDM).**

CONTENTS

General Information 6-3
Statement on Cleanliness and Care 6-3
Precaution 6-4
Precaution on engine service 6-4
Precaution on fuel system service 6-4
Fuel pressure relief procedure 6-5
Fuel leakage check procedure 6-6
Diagnosis 6-7
Engine Diagnosis General Description 6-7
On-Board Diagnostic System Description 6-7
Precaution in Diagnosing Trouble for Engine 6-10
Engine and Emission Control System Check 6-11
Customer Problem Inspection Form (Example) 6-14
Malfunction Indicator Lamp (MIL) Check 6-15
Diagnostic Trouble Code (DTC) Check 6-15
Diagnostic Trouble Code (DTC) Clearance 6-15
DTC Table 6-17
Fail-Safe Table 6-20
Visual Inspection 6-21
Engine Basic Inspection 6-22
Engine Symptom Diagnosis 6-24
Scan Tool Data 6-32
Inspection of ECM and Its Circuits 6-37
Table A-1 Malfunction Indicator Lamp Circuit Check – Lamp Does Not Come "ON" with Ignition Switch ON (But Engine Stops) 6-56
Table A-2 Malfunction Indicator Lamp Circuit Check-lamp Remains "ON" after Engine Starts 6-58
Table A-3 ECM Power and Ground Circuit Check-MIL Doesn't Light with Ignition Switch ON and Engine Doesn't Start Though It Is Cranked Up 6-60
DTC P0010 Camshaft Position Actuator Circuit 6-63
DTC P0011 Camshaft Position – Timing Over-Advanced or System Performance
DTC P0012 Camshaft Position – Timing Over-Retarded 6-65
DTC P0101 Mass Air Flow Circuit Range/Performance 6-67
DTC P0102 Mass Air Flow Circuit Low Input 6-70
DTC P0103 Mass Air Flow Circuit High Input 6-73
DTC P0112 Intake Air Temperature Sensor Circuit Low 6-75
DTC P0113 Intake Air Temperature Sensor Circuit High 6-77
DTC P0117 Engine Coolant Temperature Circuit Low 6-80

DTC P0118 Engine Coolant Temperature Circuit High 6-82
DTC P0121 Throttle Position Sensor Circuit Range / Performance....6-85
DTC P0122 Throttle Position Sensor Circuit Low 6-89
DTC P0123 Throttle Position Circuit High Input....6-91
DTC P0131 O2 Sensor (HO2S) Circuit Low Voltage (Sensor-1) 6-94
DTC P0132 O2 Sensor (HO2S) Circuit High Voltage (Sensor-1) 6-94
DTC P0133 O2 Sensor (HO2S) Circuit Slow Response (Sensor-1) 6-97
DTC P0134 Heated Oxygen Sensor (HO2S) No Activity Detected (Sensor-1) 6-98
DTC P0031 HO2S Heater Control Circuit Low (Sensor-1)
DTC P0032 HO2S Heater Control Circuit High (Sensor-1) 6-101
DTC P0137 O2 Sensor (HO2S) Circuit Low Voltage (Sensor-2) 6-104
DTC P0138 O2 Sensor (HO2S) Circuit High Voltage (Sensor-2) 6-104
DTC P0037 HO2S Heater Control Circuit Low (Sensor-2)
DTC P0038 HO2S Heater Control Circuit High (Sensor-2) 6-107
DTC P0171 System Too Lean 6-109
DTC P0172 System Too Rich....6-109
DTC P0300 Random Misfire Detected....6-111
DTC P0301 Cylinder 1 Misfire Detected....6-111
DTC P0302 Cylinder 2 Misfire Detected....6-111
DTC P0303 Cylinder 3 Misfire Detected....6-111
DTC P0304 Cylinder 4 Misfire Detected....6-111
DTC P0327 Knock Sensor Circuit Low
DTC P0328 Knock Sensor Circuit High 6-113
DTC P0335 Crankshaft Position (CKP) Sensor Circuit 6-116
DTC P0340 Camshaft Position Sensor Circuit....6-120
DTC P0401 Exhaust Gas Recirculation Flow Insufficient Detected
DTC P0402 Exhaust Gas Recirculation Flow Excessive Detected....6-124
DTC P0403 Exhaust Gas Recirculation Control Circuit 6-127
DTC P0420 Catalyst System Efficiency Below Threshold 6-129
DTC P0443 Evaporative Emission System Purge Control Valve Circuit....6-131
DTC P0462 Fuel Level Sensor Circuit Low 6-133
DTC P0463 Fuel Level Sensor Circuit High 6-135
DTC P0480 Fan 1 (Radiator Cooling Fan) Control Circuit....6-138
DTC P0481 Fan 2 (A/C Condenser Fan) Control Circuit....6-141
DTC P0500 Vehicle Speed Sensor (VSS) Malfunction....6-145
DTC P0505 Idle Air Control System 6-148
DTC P0506 Idle Air Control System RPM Lower than Expected
DTC P0507 Idle Air Control System RRM Higher than Expected....6-151
  Idle air control (IAC) valve operation check 6-154
  Idle air control (IAC) valve check....6-154
DTC P0616 Starter Relay Circuit Low 6-156
DTC P0617 Starter Relay Circuit High 6-157
DTC P0107 Manifold Absolute Pressure Low Input....6-159
DTC P0108 Manifold Absolute Pressure High Input 6-162
DTC P0601 Internal Control Module Memory Check Sum Error
DTC P0602 Control Module Programming Error 6-166
DTC P1510 ECM Back-up Power Supply Malfunction 6-166
DTC P2227 Barometric Pressure Circuit Range/Performance
DTC P2228 Barometric Pressure Circuit Low
DTC P2229 Barometric Pressure Circuit High 6-168
Table B-1 Fuel Injector Circuit Check....6-169
Table B-2 Fuel Pump and Its Circuit Check 6-171
Table B-3 Fuel Pressure Check....6-173
Table B-4 Idle Air Control System Check 6-175
Table B-5 A/C Signal Circuits Check (Vehicle with A/C) 6-178
Table B-6 Electric Load Signal Circuit Check 6-182
Table B-7 Radiator Fan Control System Check 6-183
Table B-8 A/C Condenser Fan Control System....6-185
Special Tool 6-188

General Information

Statement on Cleanliness and Care

An automobile engine is a combination of many machined, honed, polished and lapped surfaces with tolerances that are measured in the thousands of an millimeter (ten thousands of an inch).

Accordingly, when any internal engine parts are serviced, care and cleanliness are important.

Throughout this section, it should be understood that proper cleaning and protection of machined surfaces and friction areas is part of the repair procedure. This is considered standard shop practice even if not specifically stated.

- A liberal coating of engine oil should be applied to friction areas during assembly to protect and lubricate the surfaces on initial operation.
- Whenever valve train components, pistons, piston rings, connecting rods, rod bearings, and crankshaft journal bearings are removed for service, they should be retained in order.

  At the time of installation, they should be installed in the same locations and with the same mating surfaces as when removed.
- Battery cables should be disconnected before any major work is performed on the engine.

  Failure to disconnect cables may result in damage to wire harness or other electrical parts.

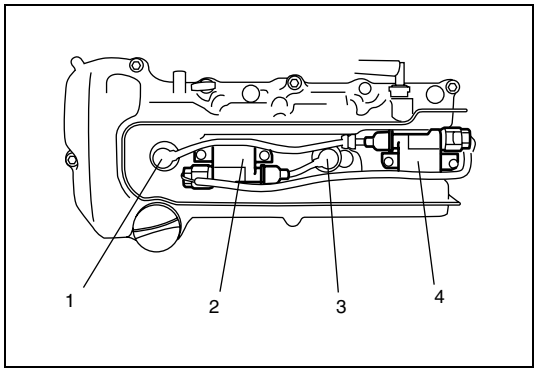

- Throughout this manual, the four cylinders of the engine are identified by numbers; No.1 (1), No.2 (2), No.3 (3) and No.4 (4) counted from crankshaft pulley side to flywheel side.

Precaution

Precaution on engine service

THE FOLLOWING INFORMATION ON ENGINE SERVICE SHOULD BE NOTED CAREFULLY, AS IT IS IMPORTANT IN PREVENTING DAMAGE, AND IN CONTRIBUTING TO RELIABLE ENGINE PERFORMANCE.

- When raising or supporting engine for any reason, do not use a jack under oil pan. Due to small clearance between oil pan and oil pump strainer, jacking against oil pan may cause it to be bent against strainer resulting in damaged oil pick-up unit.
- It should be kept in mind, while working on engine, that 12-volt electrical system is capable of violent and damaging short circuits.
  When performing any work where electrical terminals can be grounded, ground cable of the battery should be disconnected at battery.
- Any time the air cleaner, throttle body or intake manifold is removed, the intake opening should be covered. This will protect against accidental entrance of foreign material which could follow intake passage into cylinder and cause extensive damage when engine is started.

Precaution on fuel system service

- Work must be done with no smoking, in a well-ventilated area and away from any open flames.
- As fuel feed line (between fuel pump and fuel pressure regulator) is still under high fuel pressure even after engine was stopped, loosening or disconnecting fuel feed line directly may cause dangerous spout of fuel to occur where loosened or disconnected.
  Before loosening or disconnecting fuel feed line, make sure to release fuel pressure according to “Fuel Pressure Relief Procedure”. A small amount of fuel may be released after the fuel line is disconnected. In order to reduce the chance of personal injury, cover the fitting to be disconnected with a shop cloth. Put that cloth in an approved container when disconnection is completed.
- Never run engine with fuel pump relay disconnected when engine and exhaust system are hot.

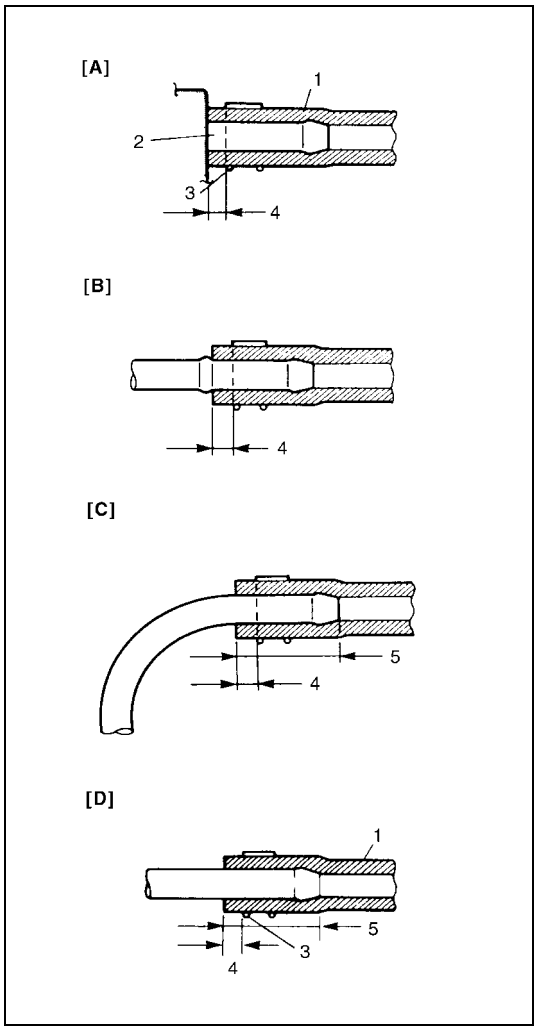

- Fuel or fuel vapor hose connection varies with each type of pipe. When reconnecting fuel or fuel vapor hose, be sure to connect and clamp each hose correctly referring to the figure Hose Connection.
  After connecting, make sure that it has no twist or kink.
- When installing injector, fuel feed pipe or lubricate its O-ring with gasoline.

[A]:	With short pipe, fit hose as far as it reaches pipe joint as shown.
[B]:	With following type pipe, fit hose as far as its peripheral projection as shown.
[C]:	With bent pipe, fit hose as its bent part as shown or till pipe is about 20 to 30 mm (0.79 – 1.18 in.) into the hose.
[D]:	With straight pipe, fit hose till pipe is, about 20 to 30 mm (0.79 – 1.18 in.) into the hose.
1.	Hose
2.	Pipe
3.	Clamp
4.	Clamp securely at a position 3 to 7 mm (0.12 – 0.27 in.) from hose end.
5.	20 to 30 mm (0.79 – 1.18 in.)

Fuel pressure relief procedure

CAUTION:
This work must not be done when engine is hot. If done so, it may cause adverse effect to catalyst.

NOTE:
If any service shown below is performed, ECM may detect DTC(s). Therefore, clear DTC(s) by referring to "Diagnostic Trouble Code (DTC) Clearance" in this section in case that DTC(s) is detected after all services are done.

After making sure that engine is cold, release fuel pressure as follows.

1) Place transmission gear shift lever in "Neutral" (Shift selector lever to "P" range for A/T model), set parking brake, and block drive wheels.
2) Remove relay/fuse box cover.

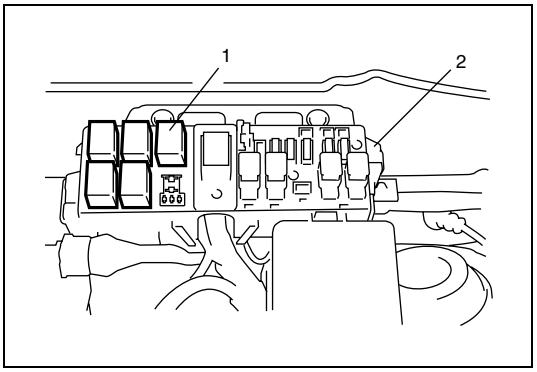

3) Disconnect fuel pump relay (1) from relay/fuse box (2).
4) Remove fuel filter cap to release fuel vapor pressure in fuel tank and then reinstall it.
5) Start engine and run it till it stops for lack of fuel. Repeat cranking engine 2-3 times for about 3 seconds each time to dissipate fuel pressure in lines. Fuel connections are now safe for servicing.
6) Upon completion of servicing, connect fuel pump relay (1) to relay/fuse box (2) and install relay/fuse box cover.

Fuel leakage check procedure

After performing any service on fuel system, check to make sure that there are no fuel leakages as follows.

1) Turn ON ignition switch for 3 seconds (to operate fuel pump) and then turn it OFF.
   Repeat this (ON and OFF) 3 or 4 times and apply fuel pressure to fuel line (till fuel pressure is felt by hand placed on fuel feed hose).
2) In this state, check to see that there are no fuel leakages from any part of fuel system.

Diagnosis

Engine Diagnosis General Description

This vehicle is equipped with an engine and emission control system which are under control of ECM.
The engine and emission control system in this vehicle are controlled by ECM. ECM has an On-Board Diagnostic system which detects a malfunction in this system and abnormality of those parts that influence the engine exhaust emission. When diagnosing engine troubles, be sure to have full understanding of the outline of "On-Board Diagnostic System" and each item in "Precaution in Diagnosing Trouble" and execute diagnosis according to "Engine and Emission Control System Check".
There is a close relationship between the engine mechanical, engine cooling system, ignition system, exhaust system, etc. and the engine and emission control system in their structure and operation. In case of an engine trouble, even when the malfunction indicator lamp (MIL) doesn't turn ON, it should be diagnosed according to this flow.

On-Board Diagnostic System Description

ECM in this vehicle has following functions.

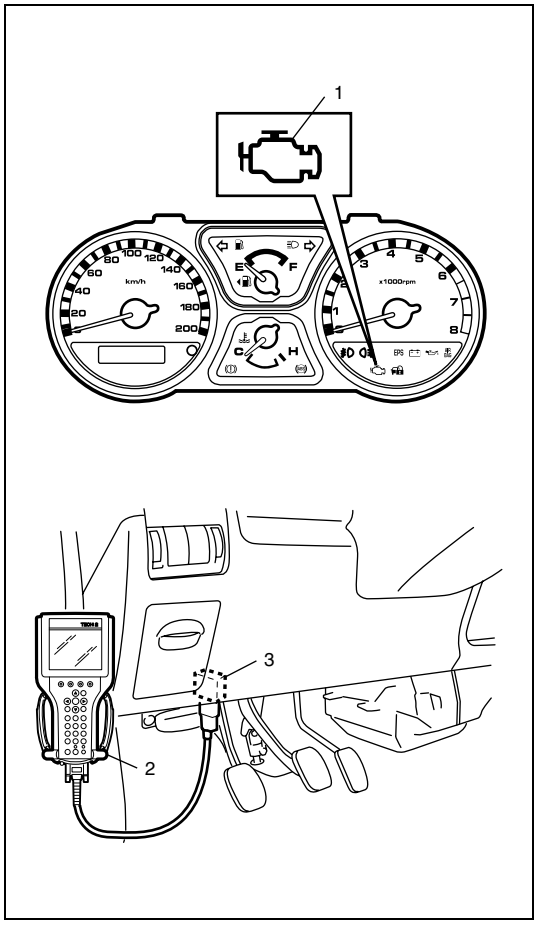

- When the ignition switch is turned ON with the engine at a stop, malfunction indicator lamp (MIL) (1) turns ON to check the circuit of the malfunction indicator lamp (1).
- When ECM detects a malfunction which gives an adverse effect to vehicle emission while the engine is running, it makes the malfunction indicator lamp (1) in the meter cluster of the instrument panel turn ON or flash (flashing only when detecting a misfire which can cause damage to the catalyst) and stores the malfunction area in its memory.
  (If it detects that continuously 3 driving cycles are normal after detecting a malfunction, however, it makes MIL (1) turn OFF although DTC stored in its memory will remain.)
- As a condition for detecting a malfunction in some areas in the system being monitored by ECM and turning ON the malfunction indicator lamp (1) due to that malfunction, 2 driving cycle detection logic is adopted to prevent erroneous detection.
- When a malfunction is detected, engine and driving conditions then are stored in ECM memory as freeze frame data. (For the details, refer to description on FREEZE FRAME DATA.)
- It is possible to communicate by using not only Suzuki Scan Tool (2) but also OBD generic scan tool. (Diagnostic information can be accessed by using a scan tool.)

3. Data link connector (DLC)

WARM-UP CYCLE

A warm-up cycle means sufficient vehicle operation such that the coolant temperature has risen by at least 22°C (40°F) from engine starting and reaches a minimum temperature of 70°C (160°F).

DRIVING CYCLE

A “Driving Cycle” consists of engine startup and engine shutoff.

2 DRIVING CYCLE DETECTION LOGIC

The malfunction detected in the first driving cycle is stored in ECM memory (in the form of pending DTC) but the malfunction indicator lamp does not light at this time. It lights up at the second detection of same malfunction also in the next driving cycle.

PENDING DTC

Pending DTC means a DTC detected and stored temporarily at 1 driving cycle of the DTC which is detected in the 2 driving cycle detection logic.

FREEZE FRAME DATA

ECM stores the engine and driving conditions (in the form of data as shown in the figure) at the moment of the detection of a malfunction in its memory. This data is called “Freeze frame data”. Therefore, it is possible to know engine and driving conditions (e.g., whether the engine was warm or not, where the vehicle was running or stopped, where air/fuel mixture was lean or rich) when a malfunction was detected by checking the freeze frame data. Also, ECM has a function to store each freeze frame data for three different malfunctions in the order as the malfunction is detected. Utilizing this function, it is possible to know the order of malfunctions that have been detected. Its use is helpful when rechecking or diagnosing a trouble.

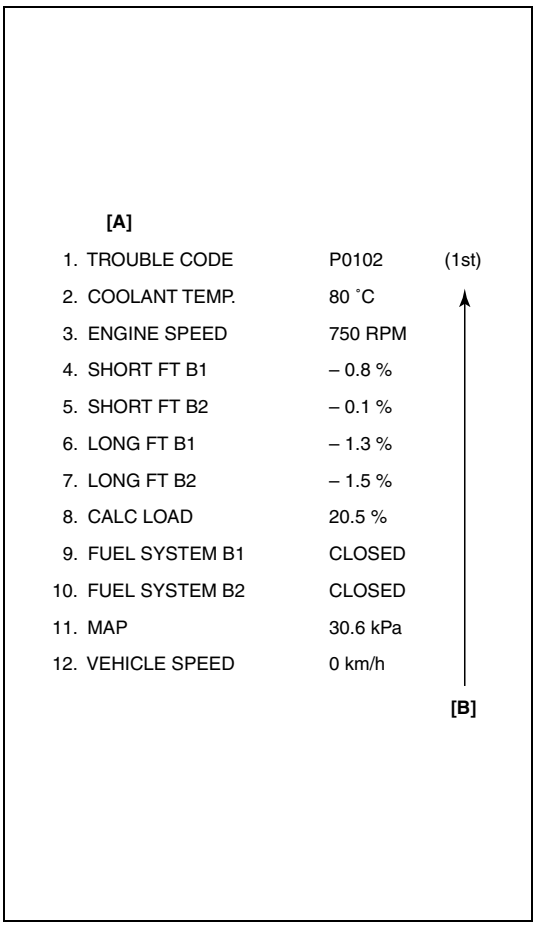
[A]
1. TROUBLE CODE P0102 (1st)
2. COOLANT TEMP. 80 ˚C
3. ENGINE SPEED 750 RPM
4. SHORT FT B1 – 0.8 %
5. SHORT FT B2 – 0.1 %
6. LONG FT B1 – 1.3 %
7. LONG FT B2 – 1.5 %
8. CALC LOAD 20.5 %
9. FUEL SYSTEM B1 CLOSED
10. FUEL SYSTEM B2 CLOSED
11. MAP 30.6 kPa
12. VEHICLE SPEED 0 km/h
[B]

PRIORITY OF FREEZE FRAME DATA:

ECM has 4 frames where the freeze frame data can be stored. The first frame stores the freeze frame data of the malfunction which was detected first. However, the freeze frame data stored in this frame is updated according to the priority described below. (If malfunction as described in the upper square “1” below is detected while the freeze frame data in the lower square “2” has been stored, the freeze frame data “2” will be updated by the freeze frame data “1”.)

[A]: An Example of Freeze Frame Data
[B]: 1st, 2nd or 3rd in parentheses here represents which position in the order the malfunction is detected.

PRIORITY	FREEZE FRAME DATA IN FRAME 1
1	Freeze frame data at initial detection of malfunction among misfire detected (P0300-P0304), fuel system too lean (P0171) and fuel system too rich (P0172)
2	Freeze frame data when a malfunction other than those in “1” above is detected

In the 2nd through the 4th frames, the freeze frame data of each malfunction is stored in the order as the malfunction is detected. These data are not updated.
Shown in the table below are examples of how freeze frame data are stored when two or more malfunctions are detected.

			FRAME			
			FRAME 1	FRAME 2	FRAME 3	FRAME 4
			FREEZE FRAME DATA to be updated	1st FREEZE FRAME DATA	2nd FREEZE FRAME DATA	3rd FREEZE FRAME DATA
MALFUNCTION DETECTED ORDER		No malfunction	No freeze frame data			
	1	P0401 (EGR) detected	Data at P0401 detection	Data at P0401 detection	–	–
	2	P0171 (Fuel system) detection	Data at P0171 detection	Data at P0401 detection	Data at P0171 detection	–
	3	P0300 (Misfire) detected	Data at P0171 detection	Data at P0401 detection	Data at P0171 detection	Data at P0300 detection
	4	P0301 (Misfire) detected	Data at P0171 detection	Data at P0401 detection	Data at P0171 detection	Data at P0300 detection

FREEZE FRAME DATA CLEARANCE:

The freeze frame data is cleared at the same time as clearance of diagnostic trouble code (DTC).

DATA LINK CONNECTOR (DLC)

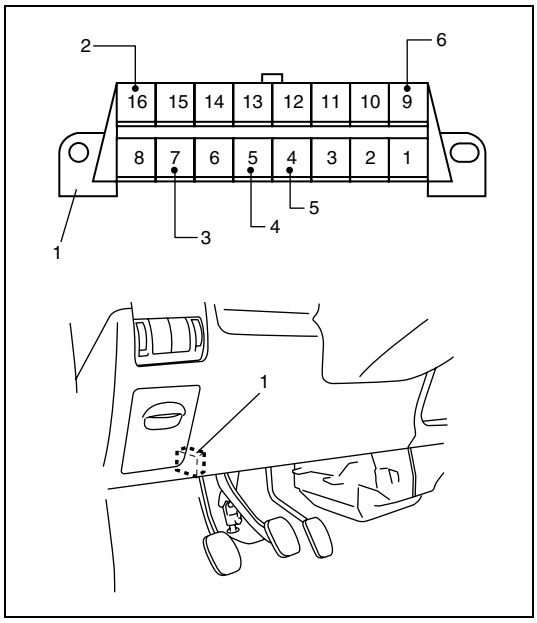

DLC (1) is in compliance with SAE J1962 in the shape of connector and pin assignment.

OBD serial data line (3) (K line of ISO 9141) is used for Suzuki Scan Tool or OBD generic scan tool to communicate with ECM, Air bag SDM and ABS control module.
SUZUKI serial data line (6) is used for Suzuki Scan Tool to communicate with immobilizer control module.

2. B + (Unswitched Vehicle Battery Positive)
4. ECM ground (Signal Ground)
5. Vehicle body ground (Chassis Ground)

Precaution in Diagnosing Trouble for Engine

- Don't disconnect couplers from ECM, battery cable from battery, ECM ground wire harness from engine or main fuse before confirming diagnostic information (DTC, freeze frame data, etc.) stored in ECM memory. Such disconnection will erase memorized information in ECM memory.
- Diagnostic information stored in ECM memory can be cleared as well as checked by using Suzuki Scan Tool or OBD generic scan tool. Before using scan tool, read its Operator's (Instruction) Manual carefully to have good understanding as to what functions are available and how to use it.
- Priorities for diagnosing troubles
  If two or more diagnostic trouble codes (DTCs) are stored, proceed to the flow table of the DTC which has detected earliest in the order and follow the instruction in that table.
  If no instructions are given, troubleshoot diagnostic trouble codes according to the following priorities.
  - Diagnostic trouble codes (DTCs) other than DTC P0171/P0172 (Fuel system too lean/too rich), DTC P0300/P0301/P0302/P0303/P0304 (Misfire detected) and DTC P0401/P0402 (EGR flow malfunction)
  - DTC P0171/P0172 (Fuel system too lean/too rich) and DTC P0401/P0402 (EGR flow malfunction)
  - DTC P0300/P0301/P0302/P0303/P0304 (Misfire detected)
- Be sure to read "Precautions for Electrical Circuit Service" in Section 0A before inspection and observe what is written there.
- ECM Replacement
  When substituting a known-good ECM, check for the following conditions. Neglecting this check may cause damage to a known-good ECM.
  - Resistance value of all relays, actuators is as specified respectively.
  - MAP sensor and TP sensor are in good condition and none of power circuits of these sensors is shorted to ground.

Engine and Emission Control System Check

Refer to the following items for the details of each step.

Step	Action	Yes	No
1	Customer Complaint Analysis 1) Perform customer complaint analysis referring to “1. CUSTOMER COMPLAINT ANALYSIS” in followings. Was customer complaint analysis performed?	Go to Step 2.	Perform customer complaint analysis.
2	Diagnostic Trouble Code (DTC) and Freeze Frame Data Check, Record and Clearance 1) Check for DTC (including pending DTC) referring to the “2. DIAGNOSTIC TROUBLE CODE (DTC)/ FREEZE FRAME DATA CHECK, RECORD AND CLEARANCE” in followings. Is there any DTC(s)?	Print DTC and freeze frame data or write them down and clear them by referring to “Diagnostic Trouble Code (DTC) Clearance” in this section, and go to Step 3.	Go to Step 4.
3	Visual Inspection 1) Perform visual inspection referring to the “3. and 4. VISUAL INSPECTION” in followings. Is there any faulty condition?	Repair or replace malfunction part, and go to Step 11.	Go to Step 5.
4	Visual Inspection 1) Perform visual inspection referring to the “3. and 4. VISUAL INSPECTION” in followings. Is there any faulty condition?		Go to Step 8.
5	Trouble Symptom Confirmation 1) Confirm trouble symptom referring to the “5. TROUBLE SYMPTOM CONFIRMATION” in followings. Is trouble symptom identified?	Go to Step 6.	Go to Step 7.
6	Rechecking and Record of DTC/Freeze Frame Data 1) Recheck for DTC and freeze frame data referring to “Diagnostic Trouble Code (DTC) Check” in this section. Is there any DTC(s)?	Go to Step 9.	Go to Step 8.
7	Rechecking and Record of DTC/Freeze Frame Data 1) Recheck for DTC and freeze frame data referring to “Diagnostic Trouble Code (DTC) Check” in this section. Is there any DTC(s)?		Go to Step 10.
8	Engine Basic Inspection and Engine Symptom Diagnosis 1) Check and repair according to “Engine Basic Inspection” and “Engine Symptom Diagnosis” in this section. Are check and repair complete?	Go to Step 11.	Check and repair malfunction part(s). Go to Step 11.
9	Trouble Shooting for DTC 1) Check and repair according to applicable DTC diag. flow table. Are check and repair complete?		
10	Check for Intermittent Problems 1) Check for intermittent problems referring to “10. CHECK FOR INTERMITTENT PROBLEM” in followings. Is there any faulty condition?	Repair or replace malfunction part(s), and go to Step 11.	Go to Step 11.

Step	Action	Yes	No
11	Final Confirmation Test 1) Clear DTC if any. 2) Perform final confirmation test referring to “11. FINAL CONFIRMATION TEST” in followings. Is there any problem symptom, DTC or abnormal condition?	Go to Step 6.	End.

1. CUSTOMER COMPLAINT ANALYSIS

Record details of the problem (failure, complaint) and how it occurred as described by the customer. For this purpose, use of such an inspection form will facilitate collecting information to the point required for proper analysis and diagnosis.

2. DIAGNOSTIC TROUBLE CODE (DTC)/FREEZE FRAME DATA CHECK, RECORD AND CLEARANCE

First, check DTC (including pending DTC), referring to “Diagnostic Trouble Code (DTC) Check” in this section. If DTC is indicated, print it and freeze frame data or write them down and then clear them by referring to “Diagnostic Trouble Code (DTC) Clearance” in this section. DTC indicates malfunction that occurred in the system but does not indicate whether it exists now or it occurred in the past and the normal condition has been restored now. To check which case applies, check the symptom in question according to Step 4 and recheck DTC according to Step 6 and 7.
Attempt to diagnose a trouble based on DTC in this step only or failure to clear the DTC in this step will lead to incorrect diagnosis, trouble diagnosis of a normal circuit or difficulty in troubleshooting.

3. and 4. VISUAL INSPECTION

As a preliminary step, be sure to perform visual check of the items that support proper function of the engine referring to “Visual Inspection” in this section.

5. TROUBLE SYMPTOM CONFIRMATION

Based on information obtained in Step 1 Customer complaint analysis and Step 2 DTC/freeze frame data check, confirm trouble symptoms. Also, reconfirm DTC according to “DTC Confirmation Procedure” described in each “DTC Diagnosis Flow Table”.

6. and 7. RECHECKING AND RECORD OF DTC/FREEZE FRAME DATA

Refer to “Diagnostic Trouble Code (DTC) Check” in this section for checking procedure.

8. ENGINE BASIC INSPECTION AND ENGINE SYMPTOM DIAGNOSIS

Perform basic engine check according to the “Engine Basic Inspection” first. When the end of the flow table has been reached, check the parts of the system suspected as a possible cause referring to “Engine Symptom Diagnosis” and based on symptoms appearing on the vehicle (symptoms obtained through steps of customer complaint analysis, trouble symptom confirmation and/or basic engine check) and repair or replace faulty parts, if any.

9. DIAGNOSTIC TROUBLE CODE FLOW TABLE (See each DTC Diag. Flow Table)

Based on the DTC indicated in Step 6 or 7 and referring to the applicable DTC diag. flow table in this section, locate the cause of the trouble, namely in a sensor, switch, wire harness, connector, actuator, ECM or other part and repair or replace faulty parts.

10. CHECK FOR INTERMITTENT PROBLEM

Check parts where an intermittent trouble is easy to occur (e.g., wire harness, connector, etc.), referring to “Intermittent and Poor Connection” in Section 0A and related circuit of DTC recorded in Step 2.

11. FINAL CONFIRMATION TEST

Confirm that the problem symptom has gone and the engine is free from any abnormal conditions. If what has been repaired is related to the DTC, clear the DTC once, perform DTC confirmation procedure and confirm that no DTC is indicated.

Customer Problem Inspection Form (Example)

User name:	Model:	VIN:	
Date of issue:	Date Reg.	Date of problem:	Mileage:

PROBLEM SYMPTOMS	
☐ **Difficult Starting** ☐ No cranking ☐ No initial combustion ☐ No combustion ☐ Poor starting at (☐cold ☐warm ☐always) ☐ Other_____	☐ **Poor Driveability** ☐ Hesitation on acceleration ☐ Back fire/☐After fire ☐ Lack of power ☐ Surging ☐ abnormal knocking ☐ Other_____
☐ **Poor Idling** ☐ Poor fast idle ☐ Abnormal idling speed (☐High ☐Low) (r/min.) ☐ Unstable ☐ Hunting (r/min. to r/min.) ☐ Other_____	☐ **Engine Stall when** ☐ Immediately after start ☐ Accel. pedal is depressed ☐ Accel. pedal is released ☐ Load is applied ☐ A/C ☐Electric load ☐P/S ☐ Other_____ ☐ Other_____
☐ OTHERS:	

VEHICLE/ENVIRONMENTAL CONDITION WHEN PROBLEM OCCURS	
Environmental Condition	
Weather Temperature Frequency Road	☐Fair ☐Cloudy ☐Rain ☐Snow ☐Always ☐Other_____ ☐Hot ☐Warm ☐Cool ☐Cold (°F/ °C) ☐Always ☐Always ☐Sometimes (times/ day, month) ☐Only once ☐Under certain condition ☐Urban ☐Suburb ☐Highway ☐Mountainous (☐Uphill ☐Downhill) ☐Tarmacadam ☐Gravel ☐Other_____
Vehicle Condition	
Engine condition	☐Cold ☐Warming up phase ☐Warmed up ☐Always ☐Other at starting ☐Immediately after start ☐Racing without load ☐Engine speed (r/min)
Vehicle condition	During driving: ☐Constant speed ☐Accelerating ☐Decelerating ☐Right hand corner ☐Left hand corner ☐When shifting (Lever position) ☐At stop ☐Vehicle speed when problem occurs (km/h, Mile/h) ☐Other

Malfunction indicator lamp condition	☐Always ON ☐Sometimes ON ☐Always OFF ☐Good condition
Diagnostic trouble code	First check: ☐No code ☐Malfunction code ( )
	Second check: ☐No code ☐Malfunction code ( )

NOTE:

The above form is a standard sample. It should be modified according to conditions characteristic of each market.

Malfunction Indicator Lamp (MIL) Check

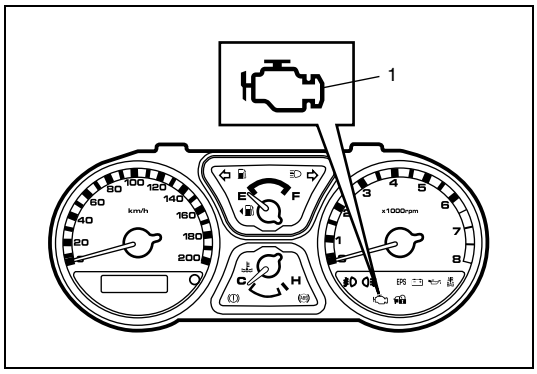

1) Turn ON ignition switch (but the engine at stop) and check that MIL (1) lights.
   If MIL does not light up (or MIL dims), go to "Malfunction Indicator Lamp Does Not Come "ON" at Ignition Switch ON (But Engine Stops)" for troubleshooting.
2) Start engine and check that MIL turns OFF.
   If MIL remains ON and no DTC is stored in ECM, go to "Malfunction Indicator Lamp Remains "ON" after Engine Starts" for troubleshooting.

Diagnostic Trouble Code (DTC) Check

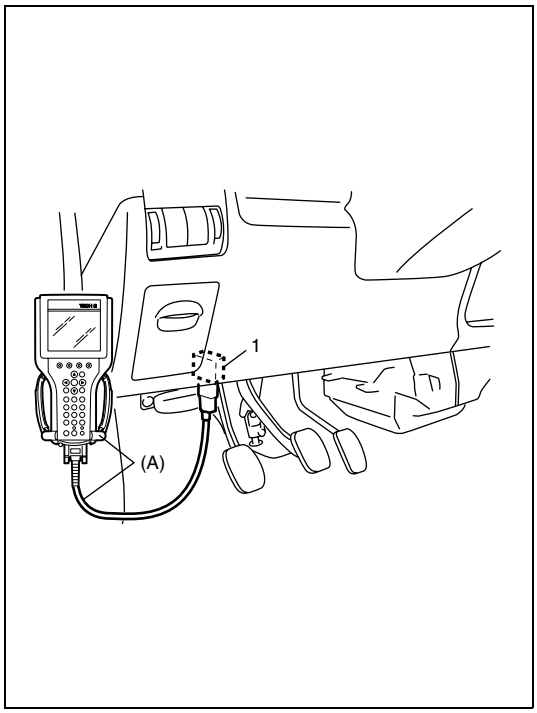

1) Prepare OBD generic scan tool or Suzuki Scan Tool.
2) With ignition switch OFF, connect it to data link connector (DLC) (1) located on underside of instrument panel at driver's seat side.

   Special tool
   (A): Suzuki Scan Tool

3) Turn ignition switch ON and confirm that MIL lights.
4) Read DTC, pending DTC and freeze frame data according to instructions displayed on scan tool and print it or write it down. Refer to scan tool operator's manual for further details.
   If communication between scan tool and ECM is not possible, check if scan tool is communicable by connecting it to ECM in another vehicle. If communication is possible in this case, scan tool is in good condition. Then check data link connector and serial data line (circuit) in the vehicle with which communication was not possible.
5) After completing the check, turn ignition switch off and disconnect scan tool from data link connector.

Diagnostic Trouble Code (DTC) Clearance

1) Connect OBD generic scan tool or Suzuki Scan Tool to data link connector in the same manner as when making this connection for DTC check.
2) Turn ignition switch OFF and then ON.
3) Erase DTC and pending DTC according to instructions displayed on scan tool. Refer to scan tool operator's manual for further details.
4) After completing the clearance, turn ignition switch off and disconnect scan tool from data link connector.

NOTE:

DTC and freeze frame data stored in ECM memory are also cleared in the following cases. Be careful not to clear them before keeping their record.

- **When power to ECM is cut off (by disconnecting battery cable, removing fuse or disconnecting ECM connectors).**
- **When the same malfunction (DTC) is not detected again during 40 engine warm-up cycles (see item "WARM-UP CYCLE" of "On-Board Diagnostic System Description" in this section).**

DTC Table

DTC NO.	DETECTING ITEM	DETECTING CONDITION (DTC will set when detecting:)	MIL
P0010	Camshaft position actuator circuit	Actual valve timing fails to become close to target advance level of each function although advance control function or retarding control function is at work.	2 driving cycles
P0011	Camshaft position - timing over-advanced or system performance	Actual valve of advanced valve timing does not reach target value, or valve timing is advanced although ECM command is most retarding.	1 driving cycle
P0012	Camshaft position - timing over-retarded		1 driving cycle
P0031	HO2S heater control circuit low (Sensor–1)	Heater current is lees than specification while heater ON.	2 driving cycles
P0032	HO2S heater control circuit high (Sensor–1)	Heater current is more than specification while heater ON.	2 driving cycles
P0037	HO2S heater control circuit low (Sensor–2)	Heater current is lees than specification while heater ON.	2 driving cycles
P0038	HO2S heater control circuit high (Sensor–2)	Heater current is more than specification while heater ON.	2 driving cycles
P0101	Mass air flow circuit range/ performance	Poor performance of MAF sensor	2 driving cycles
P0102	Mass air flow circuit low input	Low voltage	1 driving cycle
P0103	Mass air flow circuit high input	High voltage	
P0107	Manifold absolute pressure low input	Low voltage (or manifold absolute pressure sensor circuit open or shorted to ground)	1 driving cycle
P0108	Manifold absolute pressure high input	High voltage (or manifold absolute pressure sensor circuit shorted to power circuit)	1 driving cycle
P0112	Intake air temperature sensor circuit low	High temperature – low voltage (or IAT sensor circuit shorted to ground)	1 driving cycle
P0113	Intake air temperature sensor circuit high	Low temperature – high voltage (or IAT sensor circuit open)	
P0117	Engine coolant temperature sensor circuit low	High temperature – low voltage (or ECT sensor circuit shorted to ground)	1 driving cycle
P0118	Engine coolant temperature sensor circuit high	Low temperature – high voltage (or ECT sensor circuit open)	
P0121	Throttle position circuit range/performance	Poor performance of TP sensor	2 driving cycles
P0122	Throttle position circuit low	Low voltage (or TP sensor circuit shorted to ground)	1 driving cycle
P0123	Throttle position circuit high	High voltage (or TP sensor circuit open)	

DTC NO.	DETECTING ITEM	DETECTING CONDITION (DTC will set when detecting:)	MIL
P0131	O2 sensor (HO2S) circuit low voltage (Sensor–1)	Min. output voltage of HO2S–1 higher than specification	2 driving cycles
P0132	O2 sensor (HO2S) circuit high voltage (Sensor–1)	Max. output voltage of HO2S–1 is lower or higher than specification	
P0133	O2 sensor (HO2S) circuit slow response (Sensor–1)	Response time of HO2S–1 output voltage between rich and lean is longer than specification.	
P0134	O2 sensor (HO2S) circuit no activity detected (Sensor–1)	Output voltage of HO2S–1 fails to go above specification. (or HO2S–1 circuit open or short)	2 driving cycles
P0137	O2 sensor (HO2S) circuit low voltage (Sensor–2)	Min. output voltage of HO2S–2 is higher than specification	2 driving cycles
P0138	O2 sensor (HO2S) circuit high voltage (Sensor–2)	Max. output voltage of HO2S–2 is lower or higher than specification	2 driving cycles
P0171	System too lean	Total fuel trim is larger than specification for specified time or longer. (Fuel trim toward rich side is large.)	2 driving cycles
P0172	System too rich	Total fuel trim is smaller than specification for specified time or longer. (Fuel trim toward lean side is large.)	2 driving cycles
P0300	Random misfire detected	Misfire of such level as to cause damage to three way catalyst.	*1 driving cycle
P0301 P0302 P0303 P0304	Cylinder 1 misfire detected Cylinder 2 misfire detected Cylinder 3 misfire detected Cylinder 4 misfire detected	Misfire of such level as to deteriorate emission but not to cause damage to three way catalyst.	2 driving cycles
P0327	Knock sensor circuit low	Knock sensor circuit shorted to ground (low voltage)	1 driving cycle
P0328	Knock sensor circuit high	Knock sensor circuit open (high voltage)	1 driving cycle
P0335	Crankshaft position sensor circuit	No signal during engine running	1 driving cycle
P0340	Camshaft position sensor circuit	No reference signal during engine cranking or pulse number of position signal is out of specification.	
P0401	Exhaust gas recirculation flow insufficient detected	Insufficient EGR flow	2 driving cycles
P0402	Exhaust gas recirculation flow excessive detected	Excessive EGR flow	2 driving cycles
P0403	Exhaust gas recirculation control circuit	Low voltage (or EGR valve stepping motor coil circuit open or shorted to ground)	1 driving cycle
P0420	Catalyst system efficiency below threshold	Output waveforms of HO2S–1 and HO2S–2 are similar.	2 driving cycles
P0443	Evaporative emission system purge control valve circuit	Monitor signal of EVAP canister purge valve is different from command signal (circuit open or shorted to ground)	2 driving cycles
P0462	Fuel level sensor circuit low	Low voltage	2 driving cycles
P0463	Fuel level sensor circuit high	High voltage	2 driving cycles

DTC NO.	DETECTING ITEM	DETECTING CONDITION (DTC will set when detecting:)	MIL
P0480	Fan 1 (Radiator cooling fan) control circuit	Radiator cooling fan relay terminal voltage is low when cooling temp. is lower than specification.	2 driving cycles
P0481	Fan 2 (A/C condenser fan) control circuit	Monitor signal of A/C condenser fan relay is different from command signal.	2 driving cycles
P0500	Vehicle speed sensor	No signal during fuel cut for specified time or longer	2 driving cycles
P0505	Idle air control system	Voltage is out of specification for longer than specified time	1 driving cycle
P0506	Idle air control system RPM lower than expected	Engine idle speed is lower than target speed out of specified value for longer than specified time	2 driving cycles
P0507	Idle air control system RPM higher than expected	Engine idle speed is higher than target speed out of specified value for longer than specified time	2 driving cycles
P0601	Internal control module memory check sum error	Data write error or check sum error	1 driving cycle
P0602	Control module programming error	Data programming error	1 driving cycle
P0616	Starter relay circuit low	Starter signal circuit open (low voltage)	2 driving cycles
P0617	Starter relay circuit high	Starter signal circuit shorted to power supply (high voltage)	2 driving cycles
P1510	ECM backup power supply malfunction	Backup power voltage is out of specification after starting engine.	1 driving cycle
P2227	Barometric pressure circuit range/performance	Difference between barometric pressure sensor value and calculated barometric pressure value is larger than specification.	2 driving cycles
P2228	Barometric pressure circuit low	Barometric pressure sensor circuit shorted to ground.	1 driving cycle
P2229	Barometric pressure circuit high	Barometric pressure sensor circuit open	1 driving cycle
P1620	ECU code not registered	Refer to “DTC Table” in Section 8G.	
P1621	No ECU code transmitted from Immobilizer Control Module		
P1622	Fault in ECM		
P1623	ECU code not matched		

NOTE:

- **1 driving cycle: MIL lights up when DTC is detected while 1 driving cycle.**
- **2 driving cycles: MIL lights up when the same DTC is detected also in the next driving cycle after DTC is detected and stored temporarily in the first driving cycle.**
- ***1 driving cycle:**
  MIL blinks or lights up. Refer to “DTC P0300 Random Misfire Detected / DTC P0301 Cylinder 1 Misfire Detected / DTC P0302 Cylinder 2 Misfire Detected / DTC P0303 Cylinder 3 Misfire Detected / DTC P0304 Cylinder 4 Misfire Detected” for details.

Fail-Safe Table

When any of the following DTCs is detected, ECM enters fail-safe mode as long as malfunction continues to exist but that mode is canceled when ECM detects normal condition after that.

DTC NO.	DETECTED ITEM	FAIL-SAFE OPERATION
P0102	Mass air flow circuit low input	• ECM controls injector drive time (fuel injection volume) according to throttle valve opening (closed throttle position or not). • ECM stops EGR control.
P0103	Mass air flow circuit high input	
P0112	Intake air temperature sensor circuit low	• ECM controls actuators assuming that intake air temperature is 23°C (73.4°F).
P0113	Intake air temperature sensor circuit high	
P0117	Engine coolant temperature circuit low	• ECM controls actuators assuming that engine coolant temperature is 30°C (86°F). • ECM operates radiator fan.
P0118	Engine coolant temperature circuit high	
P0122	Throttle position circuit low input	• ECM controls actuators assuming that throttle opening is about 12.5°.
P0123	Throttle position circuit high input	
P0335	Crankshaft position sensor circuit	• Fix ignition timing. • ECM changes injection control system from sequential injection to simultaneous one.
P0340	Camshaft position sensor circuit	ECM changes injection control system from sequential injection to simultaneous one.
P0500	Vehicle speed sensor	ECM controls actuators assuming vehicle speed is 0 km/h (0 mile/h).
P2227	Barometric pressure sensor performance problem	ECM controls actuators assuming that barometric pressure is 100 kPa (760 mmHg).

Visual Inspection

Visually check following parts and systems.

INSPECTION ITEM	REFERRING SECTION
• Engine oil – level, leakage	"Engine Oil and Oil Filter Replacement" in Section 0B.
• Engine coolant – level, leakage	"Engine Coolant Replacement" in Section 0B.
• Fuel – level, leakage	"Fuel Lines and Connections Inspection" in Section 0B.
• Air cleaner element – dirt, clogging	"Fuel Lines and Connections Inspection" in Section 0B.
• Battery – fluid level, corrosion of terminal	
• Water pump belt – tension damage	"Drive Belt Inspection" in Section 0B.
• Throttle cable – play (under warm engine), installation	"Accelerator cable adjustment" in Section 6E1.
• Vacuum hoses of air intake system – disconnection, looseness, deterioration, bend	"Evaporative emission control system inspection" in Section 6E1.
• Connectors of electric wire harness – disconnection, friction	
• Fuses – burning	
• Parts – installation, bolt – looseness	
• Parts – deformation	
• Other parts that can be checked visually	
Also check the following items at engine start, if possible	
• Malfunction indicator lamp – Operation	"Malfunction Indicator Lamp (MIL) Check" in this section.
• Charge warning lamp – Operation	"Charging indicator lamp operation" in Section 6H.
• Engine oil pressure warning lamp – Operation	"Engine Oil Pressure Switch Inspection" in Section 8.
• Engine coolant temp. meter – Operation	"Engine Coolant Temperature (ECT) Gauge Inspection" in Section 8.
• Fuel level meter – Operation	"Fuel Gauge Inspection" in Section 8.
• Tachometer – Operation	
• Abnormal air being inhaled from air intake system	
• Exhaust system – leakage of exhaust gas, noise	
• Other parts that can be checked visually	

Engine Basic Inspection

This check is very important for troubleshooting when ECM has detected no DTC and no abnormality has been found in visual inspection.
Follow the flow table carefully.

Step	Action	Yes	No
1	Was “Engine and Emission Control System Check” performed?	Go to Step 2.	Go to “Engine and Emission Control System Check”.
2	Check battery voltage. Is it 11 V or more?	Go to Step 3.	Charge or replace battery.
3	Is engine cranked?	Go to Step 4.	Go to “Diagnosis” in Section 6G.
4	Does engine start?	Go to Step 5.	Go to Step 7.
5	Check idle speed as follows: 1) Warm up engine to normal operating temp. 2) Shift transmission to neutral position for M/T. 3) All of electrical loads are switched off. 4) Check engine idle speed with scan tool. See Fig. 1. Is it 650 – 750 r/min?	Go to Step 6.	Go to “Engine Symptom Diagnosis”.
6	Check ignition timing as follows: 1) Using Suzuki Scan Tool, select “MISC” mode on Suzuki Scan Tool and fix ignition timing to initial one. See Fig. 2. 2) Using timing light (1), check initial ignition timing. See Fig. 3. Is it 5° ± 3° BTDC at specified idle speed?	Go to “Engine Symptom Diagnosis”.	Check ignition control related parts referring to “Ignition Timing Inspection” in Section 6F1.
7	Is immobilizer control system equipped?	Go to Step 8.	Go to Step 9.
8	Check immobilizer system malfunction as follows. 1) Check immobilizer indicator lamp for flashing. Is it flashing when ignition switch is turned to ON position?	Go to “DTC Check” in Section 8G.	Go to Step 9.
9	Check fuel supply as follows: 1) Check to make sure that enough fuel is filled in fuel tank. 2) Turn ON ignition switch for 3 seconds and then OFF. Repeat this a few times. See Fig. 4. Is fuel pressure felt from fuel feed hose (4) when ignition switch is turned ON?	Go to Step 11.	Go to Step 10.
10	Check fuel pump for operating. Was fuel pump operating sound heard from fuel filler for about 3 seconds after ignition switch ON and stop?	Go to “Table B-3 Fuel Pressure Check”.	Go to “Table B-2 Fuel Pump and Its Circuit Check”.
11	Check ignition spark as follows: 1) Disconnect injector couplers. 2) Remove spark plugs and connect them to high-tension cords or ignition coils. 3) Ground spark plugs. 4) Crank engine and check if each spark plug sparks. Is it in good condition?	Go to Step 12.	Go to “Ignition Spark Test” in Section 6F1.

Step	Action	Yes	No
12	Check fuel injector for operation as follows: 1) Install spark plugs and connect injector connectors. 2) Using sound scope (1), check operating sound of each injector (2) when cranking engine. See Fig. 5. Was injector operating sound heard from all injectors?	Go to “Engine Symptom Diagnosis”.	Go to “Table B-1 Fuel Injector Circuit Check” in this section.

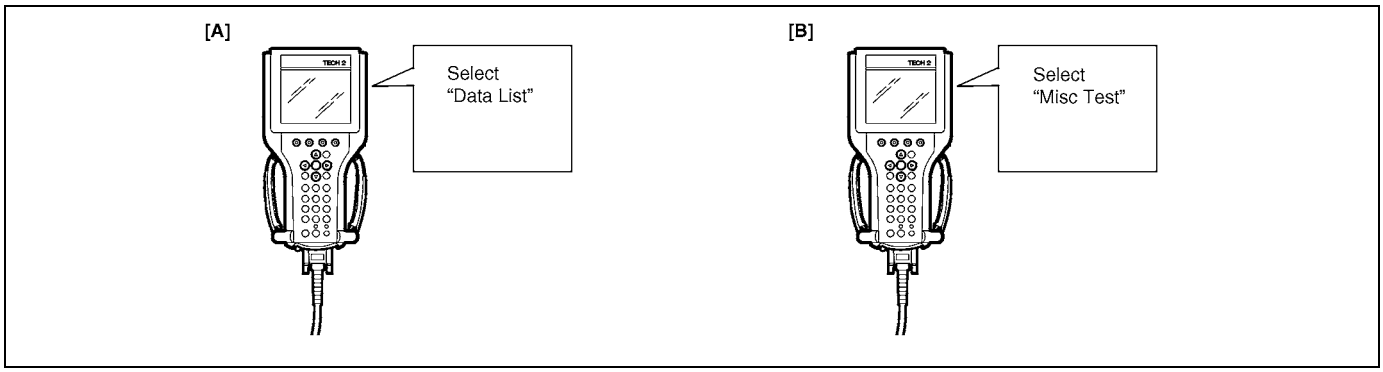

[A]: Fig. 1 for Step 5
[B]: Fig. 2 for Step 6

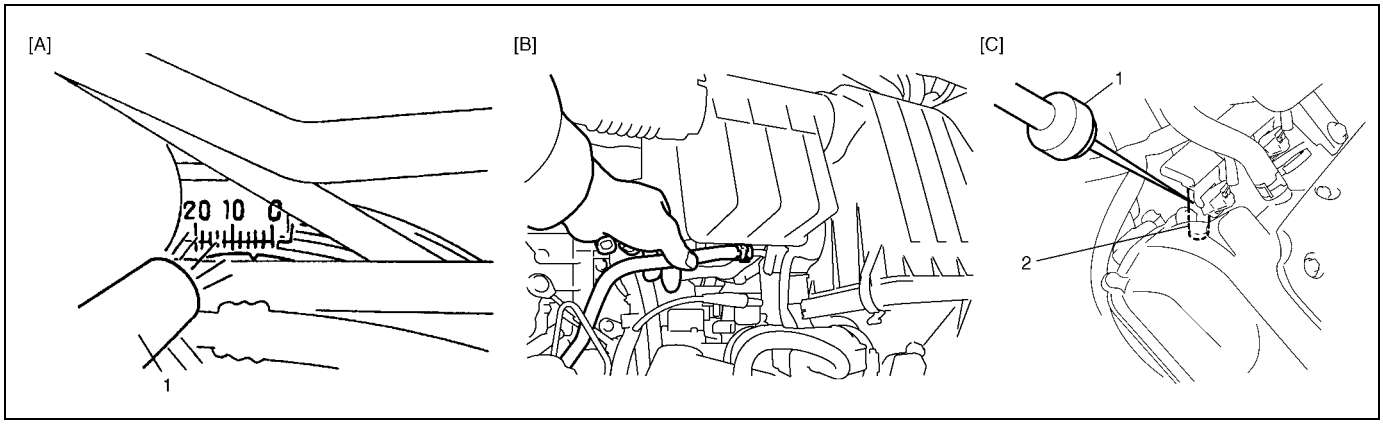

[A]: Fig. 3 for Step 6
[B]: Fig. 4 for Step 9
[C]: Fig. 5 for Step 12

Engine Symptom Diagnosis

Perform troubleshooting referring to following table when ECM has detected no DTC and no abnormality has been found in visual inspection and engine basic inspection previously.

Condition	Possible Cause	Reference Item
Hard Starting (Engine cranks OK)	Faulty spark plug	"Spark Plugs Removal and Installation" in Section 6F1.
	Leaky high-tension cord	"High-Tension Cords Removal and Installation" in Section 6F1.
	Loose connection or disconnection of high-tension cords or lead wires	"High-Tension Cords Removal and Installation" in Section 6F1.
	Faulty ignition coil	"Ignition Coil Assembly (Including Ignitor) Inspection" in Section 6F1.
	Dirty or clogged fuel hose or pipe	"Table B-3 Fuel Pressure Check" in this section.
	Malfunctioning fuel pump	"Table B-3 Fuel Pressure Check" in this section.
	Air inhaling from intake manifold gasket or throttle body gasket	
	Faulty idle air control system	"Table B-4 Idle Air Control System Check" in this section.
	Faulty ECT sensor or MAF sensor	"Engine coolant temperature sensor (ECT sensor) inspection" or "Mass air flow (MAF) and intake air temperature (IAT) sensor inspection" in Section 6E1.
	Faulty ECM	
	Low compression	"Compression Check" in Section 6A1.
	Poor spark plug tightening or faulty gasket	"Spark Plugs Removal and Installation" in Section 6F1.
	Compression leak from valve seat	"Valves and Cylinder Head Inspection" in Section 6A1.
	Sticky valve stem	"Valves and Cylinder Head Inspection" in Section 6A1.
	Weak or damaged valve springs	"Valves and Cylinder Head Inspection" in Section 6A1.
	Compression leak at cylinder head gasket	"Valves and Cylinder Head Inspection" in Section 6A1.
	Sticking or damaged piston ring	"Pistons, Piston Rings, Connecting Rods and Cylinders Inspection" in Section 6A1.
	Worn piston, ring or cylinder	"Pistons, Piston Rings, Connecting Rods and Cylinders Inspection" in Section 6A1.
	Malfunctioning PCV valve	"PCV system inspection" in Section 6E1.
	VVT system out of order	"Diagnostic Flow Table B-10" in this section or "Oil control valve inspection" in Section 6E1.

Condition	Possible Cause	Reference Item
Low oil pressure	Improper oil viscosity	"Engine Oil and Oil Filter Replacement" in Section 0B.
	Malfunctioning oil pressure switch	"Engine Oil Pressure Switch Inspection" in Section 8.
	Clogged oil strainer	"Oil Pan and Oil Pump Strainer Removal and Installation" in Section 6A1.
	Functional deterioration of oil pump	"Oil Pan and Oil Pump Strainer Removal and Installation" in Section 6A1.
	Worn oil pump relief valve	"Oil Pan and Oil Pump Strainer Removal and Installation" in Section 6A1.
	Excessive clearance in various sliding parts	
Engine noise **Note: Before checking mechanical noise, make sure that:** **Specified spark plug is used.** **Specified fuel is used.**	Improper valve lash	"Valves and Cylinder Head Inspection" in Section 6A1.
	Worn valve stem and guide	"Valves and Cylinder Head Inspection" in Section 6A1.
	Weak or broken valve spring	"Valves and Cylinder Head Inspection" in Section 6A1.
	Warped or bent valve	"Valves and Cylinder Head Inspection" in Section 6A1.
	Worn piston, ring and cylinder bore	"Pistons, Piston Rings, Connecting Rods and Cylinders Inspection" in Section 6A1.
	Worn rod bearing	"Pistons, Piston Rings, Connecting Rods and Cylinders Inspection" in Section 6A1.
	Worn crank pin	"Pistons, Piston Rings, Connecting Rods and Cylinders Inspection" in Section 6A1.
	Loose connecting rod nuts	"Pistons, Piston Rings, Connecting Rods and Cylinders Inspection" in Section 6A1.
	Low oil pressure	"Low oil pressure" in this table.
	Low oil pressure	"Low oil pressure" in this table.
	Worn bearing	"Main Bearings, Crankshaft and Cylinder Block Inspection" in Section 6A1.
	Worn crankshaft journal	"Main Bearings, Crankshaft and Cylinder Block Inspection" in Section 6A1.
	Loose bearing cap bolts	"Main Bearings, Crankshaft and Cylinder Block Inspection" in Section 6A1.
	Excessive crankshaft thrust play	"Main Bearings, Crankshaft and Cylinder Block Inspection" in Section 6A1.

Condition	Possible Cause	Reference Item
Overheating	Inoperative thermostat	“Thermostat Inspection” in Section 6B.
	Poor water pump performance	“Water Pump Inspection” in Section 6B.
	Clogged or leaky radiator	“Radiator Inspection” in Section 6B.
	Improper engine oil grade	“Engine Oil and Oil Filter Replacement” in Section 0B.
	Clogged oil filter or oil strainer	“Oil Pressure Check” in Section 6A1.
	Poor oil pump performance	“Oil Pressure Check” in Section 6A1.
	Faulty radiator fan control system	“Table B-7 Radiator Fan Control System Check” in this section.
	Dragging brakes	“Diagnosis Table” in Section 5.
	Slipping clutch	“Diagnosis Table” in Section 7C1.
	Blown cylinder head gasket	“Valves and Cylinder Head Inspection” in Section 6A1.
Poor gasoline mileage	Leaks or loose connection of high-tension cord	“High-Tension Cords Removal and Installation” in Section 6F1.
	Faulty spark plug (improper gap, heavy deposits and burned electrodes, etc.)	“Spark Plugs Removal and Installation” in Section 6F1.
	Malfunctioning EGR valve	“EGR valve inspection” Section 6E1.
	High idle speed	“Improper engine idling or engine fails to idle” in this table.
	Poor performance of TP sensor, ECT sensor or MAF sensor	“Throttle position sensor (TP sensor) on-vehicle inspection”, “Engine coolant temperature sensor (ECT sensor) inspection” or “Mass air flow (MAF) and intake air temperature (IAT) sensor inspection” in Section 6E1.
	Faulty fuel injector(s)	“Table B-1 Fuel Injector Circuit Check” in this section.
	Faulty ECM	
	Low Compression	“Low compression” in this table.
	Poor valve seating	“Valves and Cylinder Head Inspection” in Section 6A1.
	Dragging brakes	“Diagnosis Table” in Section 5.
	Slipping clutch	“Diagnosis Table” in Section 7C1.
	Thermostat out of order	“Thermostat Inspection” in Section 6B.
	Improper tire pressure	“Wheel Maintenance” in Section 3F.
	VVT system out of order	“Diagnostic Flow Table B-10” in this section or “Oil control valve inspection” in Section 6E1.

Condition	Possible Cause	Reference Item
Excessive engine oil consumption	Blown cylinder head gasket	"Valves and Cylinder Head Inspection" in Section 6A1.
	Leaky camshaft oil seals	"Camshaft, Tappet and Shim Inspection" in Section 6A1.
	Sticky piston ring	"Pistons, Piston Rings, Connecting Rods and Cylinders Inspection" in Section 6A1.
	Worn piston and cylinder	"Pistons, Piston Rings, Connecting Rods and Cylinders Inspection" in Section 6A1.
	Worn piston ring groove and ring	"Pistons, Piston Rings, Connecting Rods and Cylinders Inspection" in Section 6A1.
	Improper location of piston ring gap	"Pistons, Piston Rings, Connecting Rods and Cylinders Disassembly and Assembly" in Section 6A1.
	Worn or damaged valve stem seal	"Valves and Cylinder Head Disassembly and Assembly" in Section 6A1.
	Worn valve stem	"Valves and Cylinder Head Inspection" in Section 6A1.
Engine hesitates (Momentary lack of response as accelerator is depressed. Can occur at all vehicle speeds. Usually most severe when first trying to make vehicle move, as from a stop sign.)	Spark plug faulty or plug gap out of adjustment	"Spark Plugs Removal and Installation" in Section 6F1.
	Leaky high-tension cord	"High-Tension Cords Removal and Installation" in Section 6F1.
	Fuel pressure out of specification	"Table B-3 Fuel Pressure Check" in this section.
	Malfunctioning EGR valve	"EGR valve inspection" in section 6E1.
	Poor performance of TP sensor, ECT sensor or MAF sensor	"Throttle position sensor (TP sensor) removal and installation", "Engine coolant temperature sensor (ECT sensor) inspection" or "Mass air flow (MAF) and intake air temperature (IAT) sensor inspection" in Section 6E1.
	Faulty fuel injector	"Table B-1 Fuel Injector Circuit Check" in this section.
	Faulty ECM	
	Engine overheating	"Overheating" in this table.
	Low compression	"Low Compression" in this table.
	VVT system out of order	"Diagnostic Flow Table B-10" in this section or "Oil control valve inspection" in Section 6E1.

Condition	Possible Cause	Reference Item
Surge (Engine power variation under steady throttle or cruise. Feels like vehicle speeds up and down with no change in accelerator pedal.)	Leaky or loosely connected high-tension cord	"High-Tension Cords Removal and Installation" in Section 6F1.
	Faulty spark plug (excess carbon deposits, improper gap, and burned electrodes, etc.)	"Spark Plugs Removal and Installation" in Section 6F1.
	Variable fuel pressure	"Table B-3 Fuel Pressure Check" in this section.
	Kinky or damaged fuel hose and lines	
	Faulty fuel pump (clogged fuel filter)	
	Malfunctioning EGR valve	"EGR valve inspection" in Section 6E1.
	Poor performance of MAF sensor	"Mass air flow (MAF) and intake air temperature (IAT) sensor inspection" in Section 6E1.
	Faulty fuel injector	"Table B-1 Fuel Injector Circuit Check" in this section.
	Faulty ECM	
Excessive detonation (Engine makes continuously sharp metallic knocks that change with throttle opening. Sounds like pop corn popping.)	Faulty spark plug	"Spark Plugs Removal and Installation" in Section 6F1.
	Loose connection of high-tension cord	"High-Tension Cords Removal and Installation" in Section 6F1.
	Engine overheating	"Overheating" in this table.
	Clogged fuel filter (faulty fuel pump) or fuel lines	"Table B-1 Fuel Injector Circuit Check" or "Table B-2 Fuel Pump and Its Circuit Check" in this section.
	Air inhaling from intake manifold or throttle body O-ring	
	Malfunctioning EGR valve	"EGR valve inspection" in Section 6E1.
	Poor performance of knock sensor, ECT sensor or MAF sensor	"DTC P0325 Flow Table" in this section, "Engine coolant temperature sensor (ECT sensor) inspection" or "Mass air flow (MAF) and intake air temperature (IAT) sensor inspection" in Section 6E1.
	Faulty fuel injector(s)	"Table B-1 Fuel Injector Circuit Check" in this section.
	Faulty ECM	
	Excessive combustion chamber deposits	"Pistons, Piston Rings, Connecting Rods and Cylinders Components" in Section 6A1.
	VVT system out of order	"Diagnostic Flow Table B-10" in this section or "Oil control valve inspection" in Section 6E1.

Condition	Possible Cause	Reference Item
Engine has no power	Faulty spark plug	"Spark Plugs Removal and Installation" in Section 6F1.
	Faulty ignition coil with ignitor	"Ignition Coil Assembly (Including Ignitor) Inspection" in Section 6F1.
	Leaks, loose connection or disconnection of high-tension cord	"High-Tension Cords Removal and Installation" in Section 6F1.
	Faulty knock sensor	"DTC P0325 Flow Table" in this section.
	Clogged fuel hose or pipe	"Table B-3 Fuel Pressure Check" in this section.
	Malfunctioning fuel pump	"Table B-2 Fuel Pump and Its Circuit Check" in this section.
	Air inhaling from intake manifold gasket or throttle body gasket	
	Engine overheating	"Overheating" in this table.
	Malfunctioning EGR valve	"EGR valve inspection" in Section 6E1.
	Maladjusted accelerator cable play	"Accelerator cable adjustment" in Section 6E1.
	Poor performance of TP sensor, ECT sensor or MAF sensor	"Throttle position sensor (TP sensor) on-vehicle inspection", "Engine coolant temperature sensor (ECT sensor) inspection" or "Mass air flow (MAF) and intake air temperature (IAT) sensor inspection" in Section 6E1.
	Faulty fuel injector(s)	"Table B-1 Fuel Injector Circuit Check" in this section.
	Faulty ECM	
	Dragging brakes	"Diagnosis Table" in Section 5.
	Slipping clutch	"Diagnosis Table" in Section 7C1.
	Low compression	"Compression Check" in Section 6A1.
	VVT system out of order	"Diagnostic Flow Table B-10" in this section or "Oil control valve inspection" in Section 6E1.

Condition	Possible Cause	Reference Item
Improper engine idling or engine fails to idle	Faulty spark plug	"Spark Plugs Removal and Installation" in Section 6F1.
	Leaky or disconnected high-tension cord	"High-Tension Cords Removal and Installation" in Section 6F1.
	Faulty ignition coil with ignitor	"Ignition Coil Assembly (Including Ignitor) Inspection" in Section 6F1.
	Fuel pressure out of specification	"Table B-3 Fuel Pressure Check" in this section.
	Leaky manifold, throttle body, or cylinder head gasket	
	Malfunctioning EGR valve	"EGR valve inspection" in Section 6E1.
	Faulty idle air control system	"Table B-4 Idle Air Control System Check" in this section.
	Faulty evaporative emission control system	"Evaporative emission control system inspection" in Section 6E1.
	Faulty EGR system	"EGR valve inspection" in Section 6E1.
	Faulty fuel injector(s)	"Table B-1 Fuel Injector Circuit Check" in this section.
	Poor performance of ECT sensor, TP sensor or MAF sensor	"Throttle position sensor (TP sensor) removal and installation", "Engine coolant temperature sensor (ECT sensor) inspection" or "Mass air flow (MAF) and intake air temperature (IAT) sensor inspection" in Section 6E1.
	Faulty ECM	
	Loose connection or disconnection of vacuum hoses	
	Malfunctioning PCV valve	"PCV system inspection" in Section 6E1.
	Engine overheating	"Overheating" in this section.
	Low compression	"Compression Check" in Section 6A1.
	VVT system out of order	"Diagnostic Flow Table B-10" in this section or "Oil control valve inspection" in Section 6E1.

Condition	Possible Cause	Reference Item
Excessive hydrocarbon (HC) emission or carbon monoxide (CO)	Faulty spark plug	"Spark Plugs Removal and Installation" in Section 6F1.
	Leaky or disconnected high-tension cord	"High-Tension Cords Removal and Installation" in Section 6F1.
	Faulty ignition coil with ignitor	"Ignition Coil Assembly (Including Ignitor) Inspection" in Section 6F1.
	Low compression	"Compression Check" in Section 6A1.
	Lead contamination of three way catalytic converter	Check for absence of filler neck restrictor.
	Faulty evaporative emission control system	"Evaporative emission control system inspection" in Section 6E1.
	Fuel pressure out of specification	Table B-3 Fuel Pressure Check.
	Closed loop system (A/F feed back compensation) fails • Faulty TP sensor • Poor performance of ECT sensor or MAF sensor	 "Throttle position sensor (TP sensor) on-vehicle inspection" in Section 6E1. "Engine coolant temperature sensor (ECT sensor) inspection" or "Mass air flow (MAF) and intake air temperature (IAT) sensor inspection" in Section 6E1.
	Faulty injector(s)	"Table B-1 Fuel Injector Circuit Check" in this section.
	Faulty ECM	
	Engine not at normal operating temperature	
	Clogged air cleaner	
	Vacuum leaks	
	VVT system out of order	"Diagnostic Flow Table B-10" in this section or "Oil control valve inspection" in Section 6E1.
Excessive nitrogen oxides (NOx) emission	Improper ignition timing	"Ignition Timing Inspection" in Section 6F1.
	Lead contamination of catalytic converter	Check for absence of filler neck restrictor.
	Faulty EGR system	"EGR valve inspection" in Section 6E1.
	Fuel pressure out of specification	"Table B-3 Fuel Pressure Check" in this section.
	Closed loop system (A/F feed back compensation) fails • Faulty TP sensor • Poor performance of ECT sensor or MAF sensor	 "Throttle position sensor (TP sensor) on-vehicle inspection" in Section 6E1. "Engine coolant temperature sensor (ECT sensor) inspection" or "Mass air flow (MAF) and intake air temperature (IAT) sensor inspection" in Section 6E1.
	Faulty injector(s)	"Table B-1 Fuel Injector Circuit Check" in this section.
	Faulty ECM	
	VVT system out of order	"Diagnostic Flow Table B-10" in this section or "Oil control valve inspection" in Section 6E1.

Scan Tool Data

As the data values given below are standard values estimated on the basis of values obtained from the normally operating vehicles by using a scan tool, use them as reference values. Even when the vehicle is in good condition, there may be cases where the checked value does not fall within each specified data range. Therefore, judgment as abnormal should not be made by checking with these data alone.
Also, conditions in the table below that can be checked by the scan tool are those detected by ECM and output from ECM as commands and there may be cases where the engine or actuator is not operating (in the condition) as indicated by the scan tool. Be sure to use the timing light to check the ignition timing.

NOTE:

- **With the generic scan tool, only star (∗) marked data in the table below can be read.**
- **When checking the data with the engine running at idle or racing, be sure to shift M/T gear to the neutral gear position and A/T gear to the "Park" position and pull the parking brake fully. Also, if nothing or "no load" is indicated, turn OFF A/C, all electric loads, P/S and all the other necessary switches.**

	SCAN TOOL DATA	VEHICLE CONDITION		NORMAL CONDITION/ REFERENCE VALUES
∗	COOLANT TEMP (ENGINE COOLANT TEMP.)	At specified idle speed after warming up		80 – 100°C, 176 – 212°F
∗	INTAKE AIR TEMP	At specified idle speed after warming up		–5°C (23°F) + environmental temp. to 40°C (104°F) + environmental temp.
∗	ENGINE SPEED	At idling with no load after warming up		Desired idle speed ±50 r/min
	INJ PULSE WIDTH (FUEL INJECTION PULSE WIDTH)	At specified idle speed with no load after warming up		2.0 – 4.0 msec.
		At 2500 r/min with no load after warming up		2.0 – 3.6 msec.
	TP SENSOR VOLT (THROTTLE POSITION SENSOR OUTPUT VOLTAGE)	Ignition switch ON/ warmed up engine stopped	Accelerator pedal released	0.5 – 1.0 V
			Accelerator pedal depressed fully	Less than 4.8 V
	DESIRED IDLE (DESIRED IDLE SPEED)	At idling with radiator cooling fan stopped and all electrical parts turned OFF after warming up, M/T at neutral		700 r/min
	IAC FLOW DUTY (IDLE AIR CONTROL FLOW DUTY)	At idling with no load after warming up		5 – 55%
∗	SHORT FT B1 (SHORT TERM FUEL TRIM)	At specified idle speed after warming up		– 20 – +20%
∗	LONG FT B1 (LONG TERM FUEL TRIM)	At specified idle speed after warming up		– 20 – +20%
∗	MAF (MASS AIR FLOW RATE)	At specified idle speed with no load after warming up		1.0 – 4.0 g/s 0.14 – 0.52 lb/min
		At 2500 r/min with no load after warming up		4.0 – 12.0 g/s 0.53 – 1.58 lb/min

	SCAN TOOL DATA	VEHICLE CONDITION		NORMAL CONDITION/ REFERENCE VALUES
✱	CALC LOAD (CALCULATED LOAD VALUE)	At specified idle speed with no load after warming up		10 – 20%
		At 2500 r/min with no load after warming up		10 – 18%
✱	THROTTLE POSITION (ABSOLUTE THROTTLE POSITION)	Ignition switch ON/ warmed up engine stopped	Accelerator pedal released	9 – 19%
			Accelerator pedal depressed fully	70 – 90%
✱	O2S B1 S1 (HEATED OXYGEN SENSOR–1)	At specified idle speed after warming up		0 – 0.95 V
✱	O2S B1 S2 (HEATED OXYGEN SENSOR–2)	When engine is running at 2000 r/min. for 3 min or longer after warming up.		0 – 0.95 V
	FUEL SYSTEM B1 (FUEL SYSTEM STATUS)	At specified idle speed after warming up		CLOSED (closed loop)
	TOTAL FUEL TRIM	At specified idle speed after warming up		– 35 – +35%
✱	MAP (INTAKE MANIFOLD ABSOLUTE PRESSURE)	At specified idle speed with no load after warming up		24 – 38 kPa 180 – 285 mmHg
	BAROMETRIC PRES	–		Display the barometric pressure
	STEP EGR FLOW DUTY	At specified idle speed after warming up		0%
	FUEL CUT	When engine is at fuel cut condition		ON
		Other than fuel cut condition		OFF
	CLOSED THROTTLE POS (CLOSED THROTTLE POSITION)	Throttle valve at idle position		ON
		Throttle valve opens larger than idle position		OFF
	CANIST PRG DUTY (EVAP CANISTER PURGE FLOW DUTY)	At specified idle speed after warming up		0%
✱	IGNITION ADVANCE (IGNITION TIMING ADVANCE FOR NO.1 CYLINDER)	At specified idle speed with no load after warming up		3 – 13° BTDC
	BATTERY VOLTAGE	Ignition switch ON/engine stop		10 – 14 V
	FUEL PUMP	Within 3 seconds after ignition switch ON or engine running		ON
		Engine stop at ignition switch ON		OFF
	ELECTRIC LOAD	Ignition switch ON/Headlight, small light, all turned OFF		OFF
		Ignition switch ON/Headlight, small light, turned ON		ON
	BRAKE SWITCH	Ignition switch ON	Brake pedal is released	OFF
			Brake pedal is depressed	ON
	RADIATOR FAN (RADIATOR FAN CONTROL RELAY)	Ignition switch ON	Engine coolant temp.: Lower than 95°C (203°F)	OFF
			Engine coolant temp.: 97.5°C (208°F) or higher	ON

	SCAN TOOL DATA	VEHICLE CONDITION		NORMAL CONDITION/ REFERENCE VALUES
	BLOWER FAN	Ignition switch ON	Blower fan switch: 2nd speed position or more	ON
			Blower fan switch: under 2nd speed position	OFF
	A/C SWITCH (if equipped with A/C)	Engine running after warming up, A/C not operating		OFF
		Engine running after warming up, A/C operating		ON
	A/C MAG CLUTCH (if equipped with A/C)	Engine running	A/C switch and blower motor switch turned ON	ON
			A/C switch and blower motor switch turned OFF	OFF
	A/C COND FAN (if equipped with A/C)	Engine running	Blower motor switch and A/C switch turned ON	ON
			Blower motor switch and/ or A/C switch turned OFF	OFF
	VVT GAP (TARGET-ACTUAL POSITION)	At specified idle speed after warming up		0 – 3°

SCAN TOOL DATA DEFINITIONS

COOLANT TEMP (ENGINE COOLANT TEMPERATURE, °C, °F)

It is detected by engine coolant temp. sensor.

INTAKE AIR TEMP. (°C, °F)

It is detected by intake air temp. sensor.

ENGINE SPEED (rpm)

It is computed by reference pulses from the camshaft position sensor.

INJ PULSE WIDTH (FUEL INJECTION PULSE WIDTH, msec.)

This parameter indicates time of the injector drive (valve opening) pulse which is output from ECM (but injector drive time of NO.1 cylinder for multiport fuel injection).

TP SENSOR VOLT (THROTTLE POSITION SENSOR OUTPUT VOLTAGE, V)

The Throttle Position Sensor reading provides throttle valve opening information in the form of voltage.

DESIRED IDLE (DESIRED IDLE SPEED, rpm)

The Desired Idle Speed is an ECM internal parameter which indicates the ECM requested idle. If the engine is not running, this number is not valid.

IAC FLOW DUTY (IDLE AIR (SPEED) CONTROL DUTY, %)

This parameter indicates current flow time rate within a certain set cycle of IAC valve (valve opening rate) which controls the amount of bypass air (idle speed).

SHORT FT B1 (SHORT TERM FUEL TRIM, %)

Short term fuel trim value represents short term corrections to the air/fuel mixture computation. A value of 0 indicates no correction, a value greater than 0 means an enrichment correction, and a value less than 0 implies an enleanment correction.

LONG FT B1 (LONG TERM FUEL TRIM, %)

Long term fuel trim value represents long term corrections to the air/fuel mixture computation. A value of 0 indicates no correction, a value greater than 0 means an enrichment correction, and a value less than 0 means an enrichment correction, and a value less than 0 implies an enleanment correction.

MAF (MASS AIR FLOW RATE, g/s, lb/min)

It represents total mass of air entering intake manifold which is measured by mass air flow sensor.

CALC LOAD (CALCULATED LOAD VALUE, %)

Engine load displayed as a percentage of maximum possible load. Value is calculated mathematically using the formula: actual (current) intake air volume ÷ maximum possible intake air volume x 100%

THROTTLE POS (ABSOLUTE THROTTLE POSITION, %)

When throttle position sensor is fully closed position, throttle opening is indicated as 0% and 90 – 100% full open position.

O2S SENSOR B1 S1 (HEATED OXYGEN SENSOR–1, V)

It indicates output voltage of HO2S–1 installed on exhaust manifold (pre-catalyst).

O2S SENSOR B1 S2 (HEATED OXYGEN SENSOR–2, V)

It indicates output voltage of HO2S–2 installed on exhaust pipe (post-catalyst). It is used to detect catalyst deterioration.

FUEL SYSTEM (FUEL SYSTEM STATUS)

Air/fuel ratio feedback loop status displayed as one of the followings.
OPEN: Open loop-has not yet satisfied conditions to go closed loop.
CLOSED: Closed loop-using oxygen sensor(s) as feedback for fuel control.
OPEN-DRIVE COND: Open loop due to driving conditions (Power enrichment, etc.).
OPEN SYS FAULT: Open loop due to detected system fault.
CLOSED-ONE O2S: Closed loop, but fault with at least one oxygen sensor-may be using single oxygen sensor for fuel control.

TOTAL FUEL TRIM B1 (%)

The value of Total Fuel Trim is obtained by calculating based on values of short Term Fuel Trim and Long Term Fuel Trim. This value indicates how much correction is necessary to keep the air/fuel mixture stoichiometrical.

MAP (MANIFOLD ABSOLUTE PRESSURE, mmHg, kPa)

This value indicates how much correction is necessary to keep the air/fuel mixture stoichiometrical.
It is detected by manifold absolute pressure sensor.

BAROMETRIC PRESS (kPa, inHg)

This parameter represents a measurement of barometric air pressure and is used for altitude correction of the fuel injection quantity and IAC valve control.

STEP EGR FLOW DUTY (%)

This parameter indicates opening rate of EGR valve which controls the amount of EGR flow.

FUEL CUT (ON/OFF)

ON: Fuel being cut (output signal to injector is stopped)
OFF: Fuel not being cut

CLOSED THROTTLE POSITION (ON/OFF)

This parameter will read ON when throttle valve is fully closed, or OFF when the throttle is not fully closed.

CANIST PURGE DUTY (EVAP CANISTER PURGE FLOW DUTY, %)

This parameter indicates valve ON (valve open) time rate within a certain set cycle of EVAP canister purge valve which controls the amount of EVAP purge.

IGNITION ADVANCE (IGNITION TIMING ADVANCE FOR NO.1 CYLINDER, °)

Ignition timing of NO.1 cylinder is commanded by ECM. The actual ignition timing should be checked by using the timing light.

BATTERY VOLTAGE (V)

This parameter indicates battery positive voltage inputted from main relay to ECM.

FUEL PUMP (ON/OFF)

ON is displayed when the ECM activates the fuel pump via the fuel pump relay switch.

ELECTRIC LOAD (ON/OFF)

ON: Headlight or small light ON signal inputted.
OFF: Above electric loads all turned OFF.

BRAKE SW (ON/OFF)

This parameter indicates the state of the brake switch.

RADIATOR FAN (RADIATOR FAN CONTROL RELAY, ON/OFF)

ON: Command for radiator fan control relay operation being output.
OFF: Command for relay operation not being output.

BLOWER FAN (ON/OFF)

This parameter indicates the state of the blower fan motor switch.

A/C SWITCH (ON/OFF)

ON: Command for A/C operation being output from ECM to A/C amplifier.
OFF: Command for A/C operation not being output.

A/C MAG SWITCH (A/C COMPRESSOR RELAY, ON/OFF)

This parameter indicates the state of the A/C switch.

A/C COND FAN (ON/OFF)

This parameter indicates the state of the A/C Condenser Fan control signal.

VVT GAP [TARGET-ACTUAL POSITION] (°)

It is calculated using the formula: target valve timing advance – actual valve timing advance.

Inspection of ECM and Its Circuits

ECM and its circuits can be checked at ECM wiring couplers by measuring voltage, pulse signal and resistance.

CAUTION:

ECM cannot be checked by itself. It is strictly prohibited to connect voltmeter or ohmmeter to ECM with coupler disconnected from it.

VOLTAGE CHECK

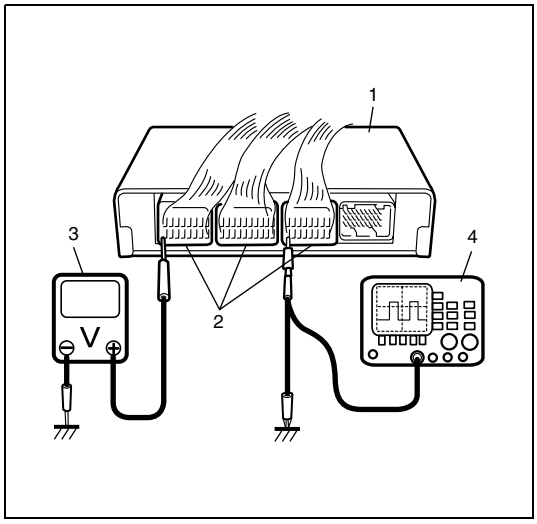

1) Remove ECM (1) from vehicle body referring to "Engine control module (ECM) removal and installation" in Section 6E1.
2) Check voltage and/or pulse signal at each terminal of couplers (2) connected, using voltmeter (3) and oscilloscope (4).

NOTE:

- **As each terminal voltage is affected by the battery voltage, confirm that it is 11 V or more when ignition switch is turned ON.**
- **Voltage with asterisk(*) cannot be measured by voltmeter because it is pulse signal.**
  Check it with oscilloscope if necessary.

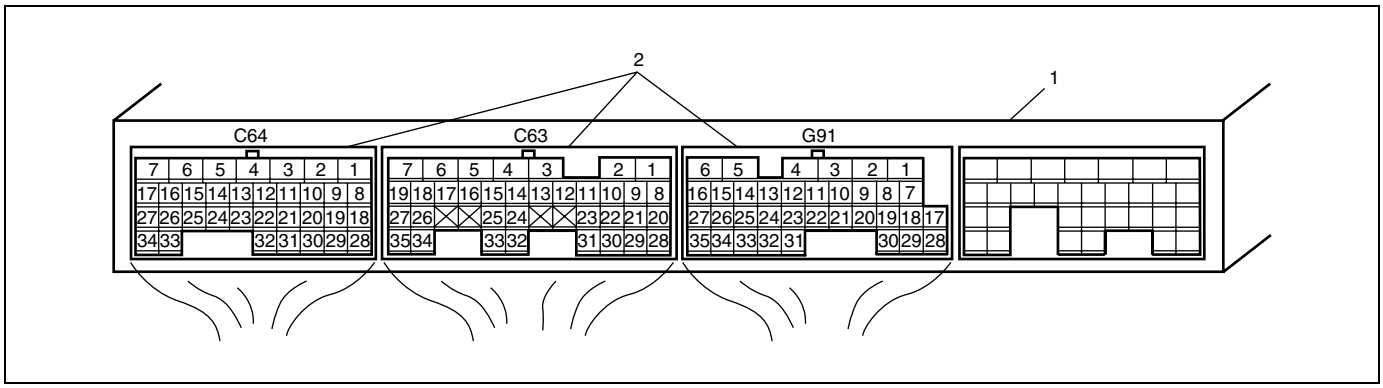

1.	ECM
2.	ECM couplers (Viewed from harness side)

TERMINAL NUMBER	WIRE COLOR	CIRCUIT	NORMAL VOLTAGE	CONDITION
C64-1	BLK/ORN	Ground for ECM	Below 0.3 V	Ignition switch turned ON
C64-2	BLK	Ground for ECM	Below 0.3 V	Ignition switch turned ON
C64-3	RED/BLU	Heater output of heated oxygen sensor–2	10 – 14 V	Ignition switch turned ON
			0 – 1 V (Reference waveform No.1)	Engine running at idling after vehicle running over 30 km/h, 19ml/h for 5 min.
C64-4	BLK/WHT	Heater output of heated oxygen sensor–1	10 – 14 V	Ignition switch turned ON
			*0 – 2 V ↑↓ 13.5 –14.8 V (Reference waveform No.2 and No.3)	Engine running at idling with after warming up. (Output signal is active low duty pulse. Duty ratio varies depending on engine condition.)
C64-5	GRN/YEL	A/C condenser fan motor relay No.2 output (if equipped)	10 – 14 V	Engine running, engine coolant temperature more than 113°C, 235°F or for about 7 sec. after A/C operated (A/C request signal inputted low voltage).
			0 – 1 V	Engine running, engine coolant temperature under than 110°C, 230°F and after about 7 sec. after A/C operated (A/C request signal inputted low voltage) or A/C OFF.
C64-6	PNK	Fuel cost output	*0 – 2 V ↑↓ 13.5 – 14.8 V	Engine running at idling with after warming up. (Output signal is 3.33 Hz duty pulse. Duty ratio varies depending on vehicle condition.)
C64-7	–	–	–	–
C64-8	RED/YEL	IAC valve output (stepper motor coil 3)	0 – 1 V	Ignition switch turned ON
			*0 – 2 V ↑↓ 8 – 14 V (Reference waveform No.4)	Ignition switch is turned to ST (cranking) position. (Output signal is active low duty pulse. Pulse generated times depending on vehicle condition)
C64-9	RED/BLU	IAC valve output (stepper motor coil 2)	8 – 14 V	Ignition switch turned ON
			*0 – 2 V ↑↓ 8 – 14 V (Reference waveform No.4)	Ignition switch is turned to ST (cranking) position. (Output signal is active low duty pulse. Pulse generated times depending on vehicle condition)
C64-10	RED/WHT	IAC valve output (stepper motor coil 1)	0 – 1 V	Ignition switch turned ON
			*0 – 2 V ↑↓ 8 – 14 V (Reference waveform No.4)	Ignition switch is turned to ST (cranking) position. (Output signal is active low duty pulse. Pulse generated times depending on vehicle condition)

TERMINAL NUMBER	WIRE COLOR	CIRCUIT	NORMAL VOLTAGE	CONDITION
C64-11	PNK/BLK	A/C compressor relay output (if equipped)	10 – 14 V	Engine running, A/C request signal high input
			0 – 1 V	Engine running, A/C request signal low input
C64-12	PNK	A/C condenser fan motor relay No.1 output (if equipped)	10 – 14 V	Ignition switch turned ON, coolant temperature under 113°C, 235°F or A/C request signal high input
			0 – 1 V	Ignition switch turned ON, coolant temperature more than 110°C, 230°F or A/C request signal low input
C64-13	BLU/BLK	EVAP canister purge valve output	10 – 14 V	Ignition switch turned ON with engine stop
			*0 – 0.6 V ↑↓ 10 – 14 V (Reference waveform No.25)	Engine running and vehicle running over 40 km/h, 25 ml/h (Output signal is 10 Hz duty pulse. Duty ratio varies depending on vehicle condition.)
C64-14	GRN	Fuel pump relay output	0 – 2.5 V	For 3 sec. from the time is ignition switch turned to ON or while engine is running
			10 – 14 V	On and after 3 sec. from the time is ignition switch turned to ON or while engine is stop
C64-15	BRN/WHT	Main power supply relay output	10 – 14 V	Ignition switch is turned OFF
			0 – 2 V	Ignition switch is turned ON
C64-16	WHT/RED	EGR valve (stepper motor coil 3) output	10 – 14 V	Ignition switch is turned ON
			*0 – 2 V ↑↓ 8 – 14 V (Reference waveform No.5)	Ignition switch is turned to ST (cranking) position. (Output signal is active low duty pulse. Pulse generated times depending on vehicle condition)
C64-17	GRN/RED	EGR valve (stepper motor coil 1) output	0 – 2 V	Ignition switch turned ON
			*0 – 2 V ↑↓ 8 – 14 V (Reference waveform No.5)	Ignition switch is turned to ST (cranking) position. (Output signal is active low duty pulse. Pulse generated times depending on vehicle condition)
C64-18	–	–	–	–
C64-19	–	–	–	–
C64-20	–	–	–	–
C64-21	–	–	–	–
C64-22	–	–	–	–
C64-23	–	–	–	–
C64-24	–	–	–	–
C64-25	–	–	–	–
C64-26	–	–	–	–
C64-27	–	–	–	–

TERMINAL NUMBER	WIRE COLOR	CIRCUIT	NORMAL VOLTAGE	CONDITION
C64-28	RED/BLK	IAC valve output (stepper motor coil 4)	8 – 14 V	Ignition switch turned ON
			*0 – 2 V ↑↓ 8 – 14 V (Reference waveform No.4)	Ignition switch is turned to ST (cranking) position. (Output signal is active low duty pulse. Pulse generated times depending vehicle condition)
C64-29	–	–	–	–
C64-30	–	–	–	–
C64-31	GRN/WHT	Ignition coil No.2 and No.3 output	0 – 0.6 V	Ignition switch turned ON
			*0 – 0.6 V ↑↓ 2 – 5 V (Reference waveform No.6)	Engine running (Output signal is active high pulse. Pulse frequency varies depending on engine speed.)
C64-32	GRN/YEL	Ignition coil No.1 and No.4 output	0 – 0.6 V	Ignition switch turned ON
			*0 – 0.6 V ↑↓ 2 – 5 V (Reference waveform No.7)	Engine running (Output signal is active high pulse. Pulse frequency varies depending on engine speed.)
C64-33	BRN/YEL	EGR valve (stepper motor coil 4) output	0 – 2 V	Ignition switch turned ON
			*0 – 2 V ↑↓ 8 – 14 V (Reference waveform No.5)	Ignition switch is turned to ST (cranking) position. (Output signal is active low duty pulse. Pulse generated times depending on vehicle condition)
C64-34	GRN/ORN	EGR valve (stepper motor coil 2) output	10 – 14 V	Ignition switch turned ON
			*0 – 2 V ↑↓ 8 – 14 V (Reference waveform No.5)	Ignition switch is turned to ST (cranking) position. (Output signal is active low duty pulse. Pulse generated times depending on vehicle condition)
C63-1	BLK/ORN	Ground for ECM	Below 0.3 V	Ignition switch turned ON
C63-2	BLU	Oil control valve output	*0 – 0.6 V ↑↓ 13 – 14 V (Reference waveform No.8 and No.9)	Ignition switch turned ON
				While engine running. (Output signal is active low duty pulse. Duty ratio varies depending on vehicle condition)
C63-3	–	–	–	–
C63-4	BLU/ORN	Fuel injector No.4 output	10 – 14 V	Ignition switch turned ON
			*0 – 0.6 V ↑↓ 10 – 14 V (Reference waveform No.10 and No.11)	Engine running (Output signal is active low pulse. Pulse frequency varies depending on engine speed.)

TERMINAL NUMBER	WIRE COLOR	CIRCUIT	NORMAL VOLTAGE	CONDITION
C63-5	BLU/RED	Fuel injector No.3 output	10 – 14 V	Ignition switch turned ON
			*0 – 0.6 V ↑↓ 10 – 14 V (Reference waveform No.10 and No.12)	Engine running (Output signal is active low pulse. Pulse frequency varies depending on engine speed.)
C63-6	BLU/WHT	Fuel injector No.2 output	10 – 14 V	Ignition switch turned ON
			*0 – 0.6 V ↑↓ 10 – 14 V (Reference waveform No.10 and No.13)	Engine running (Output signal is active low pulse. Pulse frequency varies depending on engine speed.)
C63-7	BLU/YEL	Fuel injector No.1 output	10 – 14 V	Ignition switch turned ON
			*0 – 0.6 V ↑↓ 10 – 14 V (Reference waveform No.10 and No.14)	Engine running (Output signal is active low pulse. Pulse frequency varies depending on engine speed.)
C63-8	GRY/RED	Output of 5 V power source for throttle position (TP) sensor	4.5 – 5.5 V	Ignition switch turned ON
C63-9	RED	Knock sensor signal	*2 – 3 V (Reference waveform No.15 and No.16)	Ignition switch turned ON
				Engine running at idling with after warming up
C63-10	RED/YEL	Reference (classified cylinder) signal for CMP sensor	*0 – 0.6 V ↑↓ 4 – 5 V (Reference waveform No.17)	Engine running at idling with after warming up (Sensor signal is pulse. Pulse frequency varies depending on engine speed.) (6 pulses are generated par 1camshaft revolution)
C63-11	WHT	Oxygen signal of heated oxygen sensor–1	0.5 – 1.5 V	Ignition switch turned ON
			*Deflects between over 0.5 V and under 0.45 V (Reference waveform No.2 and No.3)	While engine running at 2,000 r/min. for 1min. or longer after warmed up
C63-12	–	–	–	–
C63-13	–	–	–	–
C63-14	PNK/BLK	Mass air flow (MAF) sensor signal	0.5 – 1.5 V	Ignition switch turned ON and engine stops
			1.3 – 1.8 V (Reference waveform No.18)	When engine running at specified idle speed after warming up

TERMINAL NUMBER	WIRE COLOR	CIRCUIT	NORMAL VOLTAGE	CONDITION
C63-15	RED/WHT	Manifold absolute pressure (MAP) sensor signal	About 4 V (Reference waveform No.19)	Ignition switch turned ON with barometric pressure at 100kPa, 760mmHg
			0.4 – 1.8 V (Reference waveform No.20)	While specified idle speed after warming up with barometric pressure at 100kPa, 760mmHg
C63-16	LT GRN	Engine coolant temp. (ECT) sensor signal	3.3 – 3.6 V	Ignition switch turned ON, ECT at 0°C, 32°F
			1.1 – 1.5 V	Ignition switch turned ON, ECT at 50°C, 122°F
			0.3 – 0.45 V	Ignition switch turned ON, ECT at 100°C, 212°F
C63-17	LT GRN/ BLK	Intake air temperature (IAT) sensor signal	3.3 – 3.6 V	Ignition switch turned ON, IAT at 0°C, 32°F
			1.6 – 1.9 V	Ignition switch turned ON, IAT at 40°C, 104°F
			0.6 – 0.8 V	Ignition switch turned ON, IAT at 80°C, 176°F
C63-18	–	–	–	–
C63-19	YEL	Vehicle speed sensor signal	*0 – 1 V ↑↓ 10 – 14 V (Reference waveform No.21)	Vehicle running. (Sensor signal is pulse. Pulse frequency varies depending on vehicle speed. (8190 pulses are generated par 60 km/h, 37.5 ml/h)
C63-20	–	–	–	–
C63-21	–	–	–	–
C63-22	–	–	–	–
C63-23	–	–	–	–
C63-24	–	–	–	–
C63-25	–	–	–	–
C63-26	–	–	–	–
C63-27	–	–	–	–
C63-28	ORN	Ground for sensors	Below 0.3 V	Ignition switch turned ON
C63-29	–	–	–	–
C63-30	PNK	CKP sensor signal	0 – 1 V	Ignition switch turned ON
			*4.4 – 4.6 V ↑↓ 0.1 – 0.3 V (Reference waveform No.17)	Engine running at idling with after warming up. (Sensor signal is pulse. Pulse frequency varies depending on engine speed.) (31(34–4) pulses are generated par 1crankshaft revolution)
C63-31	GRN/YEL	Ground of ECM for shield wire	Below 0.3 V	Ignition switch turned ON
C63-32	–	–	–	–

TERMINAL NUMBER	WIRE COLOR	CIRCUIT	NORMAL VOLTAGE	CONDITION
C63-33	BRN	Oxygen signal of heated oxygen sensor–2	0.5 – 1.5 V	Ignition switch turned ON
			*Deflects between over 0.5 V and under 0.45 V (Reference waveform No.1)	While engine running at 2,000 r/min. for 1min. or longer after vehicle running over 30 km/h, 19 ml/h
C63-34	GRY/BLU	Throttle position (TP) sensor signal	0.5 – 1.0 V	Ignition switch turned ON and throttle valve at idle position with warmed engine
			3.4 – 4.7 V	Ignition switch turned ON and throttle valve at full open position
C63-35	BLK/YEL	Starting motor signal	0 – 1 V	Ignition switch turned ON
			6 – 14 V	While engine cranking
G91-1	PPL/WHT	MIL (Malfunction indicator lamp) output	0 – 2.5 V	Ignition switch turned ON with engine stop
			10 – 14 V	Engine running
G91-2	LT GRN/ BLK	Immobilizer indicator lamp output (if equipped)	10 – 14 V	While engine running
			0 – 1 V	Ignition switch turned ON with engine stop
G91-3	–	–	–	–
G91-4	BRN	Radiator fan motor relay output	10 – 14 V	Ignition switch turned ON, engine coolant temperature under 95°C, 203°F
			0 – 1 V	Ignition switch turned ON, engine coolant temperature more than 97.5°C, 207.5°F
G91-5	BLK/RED	Main power supply	10 – 14 V	Ignition switch turned ON
G91-6	BLK/RED	Main power supply	10 – 14 V	Ignition switch turned ON
G91-7	–	–	–	–
G91-8	–	–	–	–
G91-9	GRN/WHT	Electric load signal for stop lamp	0 – 1 V	Ignition switch turned ON, stop lamp not lighted up
			10 – 14 V	Ignition switch turned ON, stop lamp lighted up
G91-10	YEL	Serial communication line of data link connector 5 V	4 – 6 V	Ignition switch turned ON
G91-11	BLU	Serial communication line of data link connector 12 V	10 – 14 V	Ignition switch turned ON
G91-12	BRN	Engine revolution signal output for tachometer	0 – 0.8 V	Ignition switch turned ON with engine stop
			*0 – 1 V ↑↓ 8 – 14 V (Reference waveform No.22 and No.23)	While engine running. (Output signal is pulse. Pulse frequency varies depending on engine speed.) (2 pulses are generated par 1crankshaft revolution.) (3000 r/min = 100 Hz)

TERMINAL NUMBER	WIRE COLOR	CIRCUIT	NORMAL VOLTAGE	CONDITION
G91-13	YEL	Electric load signal for heater blower motor	10 – 14 V	Ignition switch turned ON, blower fan selector selected at OFF
			0 – 1 V	Ignition switch turned ON, blower fan selector selected at 2nd speed position or more
G91-14	YEL/RED	Fuel level sensor signal	0 – 6 V	Ignition switch turned ON Voltage depends on fuel level
G91-15	WHT/BLK	A/C evaporator outlet air temp. sensor signal (if equipped)	3.3 – 3.8 V	Ignition switch turned ON at A/C evaporator inlet air temperature 0°C (32°F)
			2.5 – 2.9 V	Ignition switch turned ON at A/C evaporator inlet air temperature 15°C (59°F)
			1.9 – 2.3 V	Ignition switch turned ON at A/C evaporator inlet air temperature 25°C (77°F)
G91-16	WHT/RED	Power source for ECM internal memory	10 – 14 V	Ignition switch turned ON and turned OFF
G91-17	–	–	–	–
G91-18	–	–	–	–
G91-19	–	–	–	–
G91-20	–	–	–	–
G91-21	–	–	–	–
G91-22	–	–	–	–
G91-23	–	–	–	–
G91-24	–	–	–	–
G91-25	–	–	–	–
G91-26	–	–	–	–
G91-27	–	–	–	–
G91-28	BLK/WHT	Ignition switch signal	0 – 1 V	Ignition switch turned OFF
			10 – 14 V	Ignition switch turned ON
G91-29	–	–	–	–
G91-30	YEL/GRN	A/C request signal (if equipped)	10 – 14 V (High input)	Ignition switch turned ON, blower fan selector selected OFF position or A/C switch turned OFF or A/C evaporator temp. less than 2.5°C, 36.5°F
			0 – 1 V (Low input)	Ignition switch turned ON, blower fan selector selected other than OFF position and A/C switch turned ON with A/C evaporator temp. more than 4°C, 39.2°F
G91-31	PPL	Vehicle speed sensor signal for speedometer	*0 – 1 V ↑↓ 10 – 14 V (Reference waveform No.21)	Vehicle running. (Sensor signal is pulse. Pulse frequency varies depending on vehicle speed.) (8190 pulses/sec. are generated par 60 km/h, 37.5 ml/h)
G91-32	GRY	ECT sensor signal for combination meter	*0 – 0.6 V ↑↓ 13 – 14 V (Reference waveform No.24)	Ignition switch turned ON (Output signal is 5 Hz active low duty pulse. Duty ratio varies depending on ECT.) ECT –30°C = 10% ON duty ECT 130°C = 90% ON duty

TERMINAL NUMBER	WIRE COLOR	CIRCUIT	NORMAL VOLTAGE	CONDITION
G91-33	RED/YEL	Electric load signal for clearance lamp	0 – 1 V	Ignition switch turned ON, clearance lamp not lighted up
			10 – 14 V	Ignition switch turned ON, clearance lamp lighted up
G91-34	–	–	–	–
G91-35	ORN	Ground for A/C evaporator outlet air temp. sensor (if equipped)	Below 0.3 V	Ignition switch turned ON

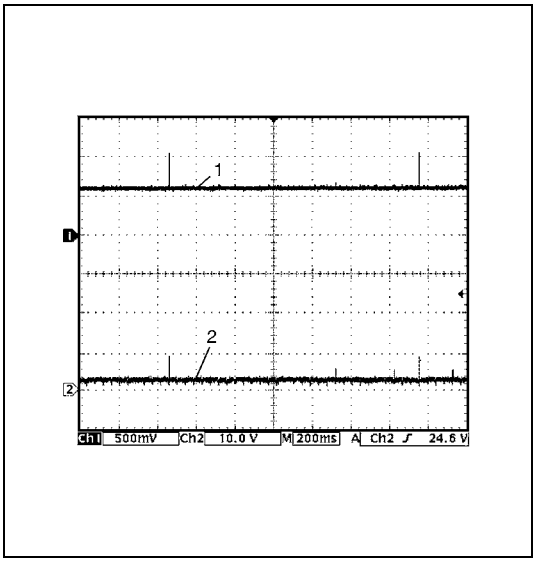

1. Reference waveform No.1

Heated oxygen sensor–2 heater signal at engine idling

Measurement terminal	CH1: C63-33 to C64-1 CH2: C64-3 to C64-1
Oscilloscope setting	CH1: 500 mV/DIV, CH2: 10 V/DIV TIME: 200 ms/DIV
Measurement condition	• After warmed up to normal operating temperature • Drive vehicle at 60 km/h (37 mil/h) for 10 min. • Engine at specified idle speed

1. Heated oxygen sensor–2 signal
2. Heated oxygen sensor–2 heater signal

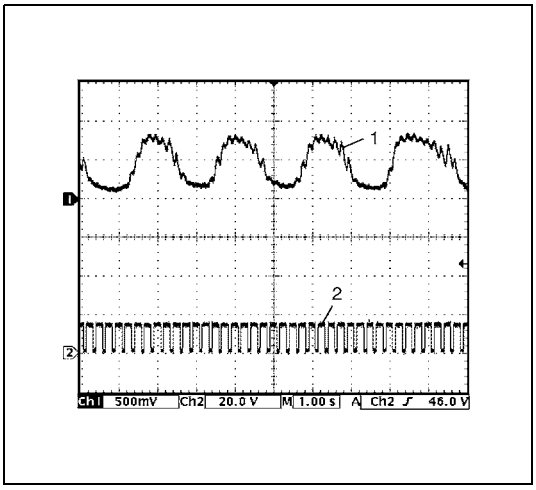

2. Reference waveform No.2

Heated oxygen sensor–1 signal at engine idling

Measurement terminal	CH1: C63-11 to C64-1 CH2: C64-4 to C64-1
Oscilloscope setting	CH1: 500 mV/DIV, CH2: 20 V/DIV TIME: 1 s/DIV
Measurement condition	• After warmed up to normal operating temperature • Engine at specified idle speed

1. Heated oxygen sensor–1 signal
2. Heated oxygen sensor–1 heater signal

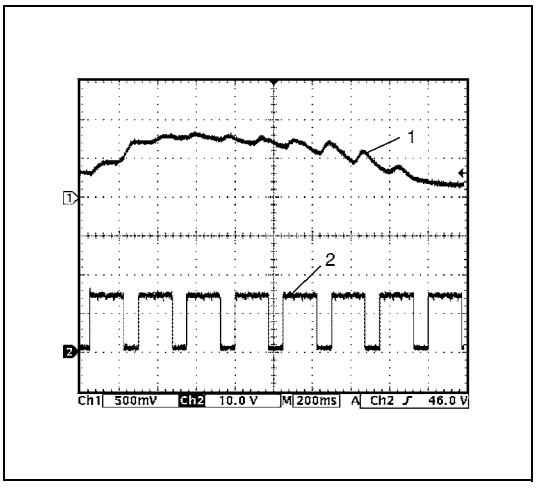

3. Reference waveform No.3

Heated oxygen sensor–1 heater signal at engine idling

Measurement terminal	CH1: C63-11 to C64-1 CH2: C64-4 to C64-1
Oscilloscope setting	CH1: 500 mV/DIV, CH2: 10 V/DIV TIME: 200 ms/DIV
Measurement condition	• After warmed up to normal operating temperature • Engine at specified idle speed

1. Heated oxygen sensor–1 signal
2. Heated oxygen sensor–1 heater signal

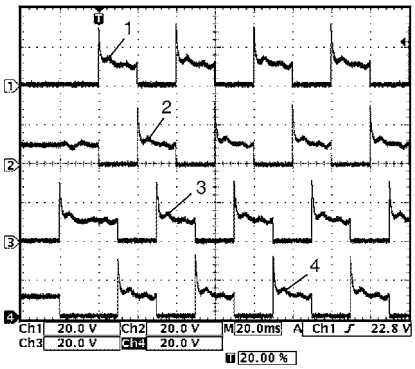

4. Reference waveform No.4

IAC valve signal

Measurement terminal	CH1: C64-10 to C64-1 CH2: C64-9 to C64-1 CH3: C64-8 to C64-1 CH4: C64-28 to C64-1
Oscilloscope setting	CH1: 20 V/DIV, CH2: 20 V/DIV CH3: 20 V/DIV, CH4: 20 V/DIV TIME: 20 ms/DIV
Measurement condition	Ignition switch turned ON from ST (cranking) position

1. IAC valve stepper motor coil 1 signal
2. IAC valve stepper motor coil 2 signal
3. IAC valve stepper motor coil 3 signal
4. IAC valve stepper motor coil 4 signal

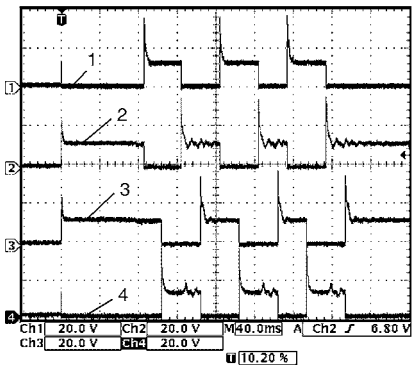

5. Reference waveform No.5

EGR valve signal

Measurement terminal	CH1: C64-17 to C64-1 CH2: C64-34 to C64-1 CH3: C64-16 to C64-1 CH4: C64-33 to C64-1
Oscilloscope setting	CH1: 20 V/DIV, CH2: 20 V/DIV CH3: 20 V/DIV, CH4: 20 V/DIV TIME: 40 ms/DIV
Measurement condition	At the moment of the ignition switch in turned on

1. EGR valve stepper motor coil 1 signal
2. EGR valve stepper motor coil 2 signal
3. EGR valve stepper motor coil 3 signal
4. EGR valve stepper motor coil 4 signal

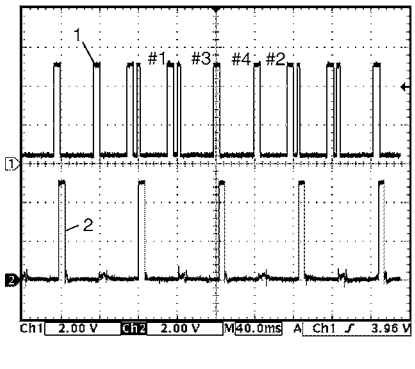

6. Reference waveform No.6

Ignition coil No.2 and No.3 signal at engine idling

Measurement terminal	CH1: C63-10 to C64-1 CH2: C64-31 to C64-1
Oscilloscope setting	CH1: 2 V/DIV, CH2: 2 V/DIV TIME: 40 ms/DIV
Measurement condition	• After warmed up to normal operating temperature • Engine at specified idle speed

1. Cylinder reference signal (CMP reference signal)
2. No.2 and No.3 ignition signal

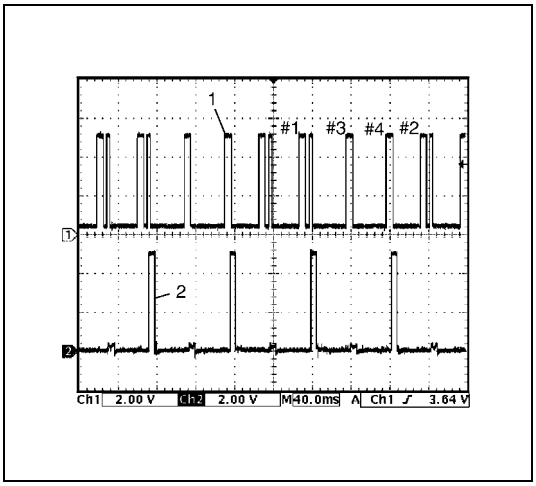

7. Reference waveform No.7

Ignition coil No.1 and No.4 signal at engine idling

Measurement terminal	CH1: C63-10 to C64-1 CH2: C64-32 to C64-1
Oscilloscope setting	CH1: 2 V/DIV, CH2: 2 V/DIV TIME: 40 ms/DIV
Measurement condition	• After warmed up to normal operating temperature • Engine at specified idle speed

1. Cylinder reference signal (CMP reference signal)
2. No.1 and No.4 ignition signal

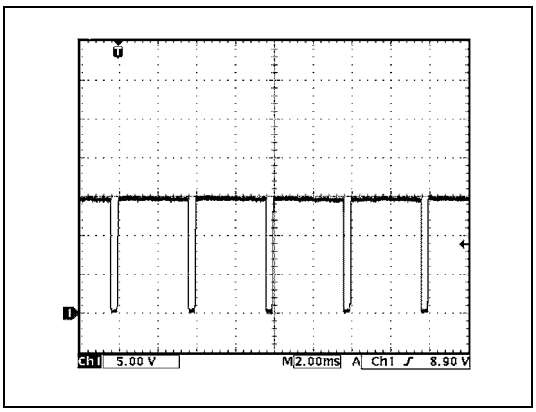

8. Reference waveform No.8

Oil control valve signal at engine idling

Measurement terminal	CH1: C63-2 to C64-1
Oscilloscope setting	CH1: 5 V/DIV TIME: 2 ms/DIV
Measurement condition	• After warmed up to normal operating temperature • Engine at specified idle speed

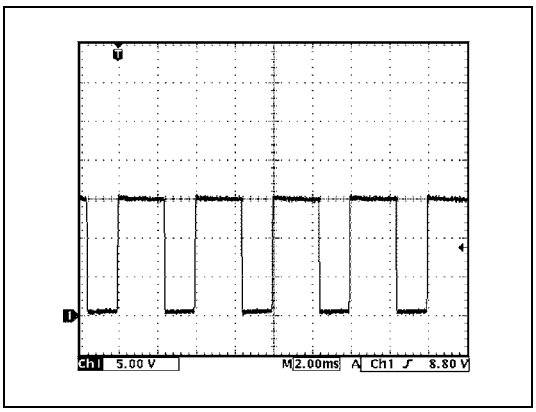

9. Reference waveform No.9

Oil control valve signal at engine racing

Measurement terminal	CH1: C63-2 to C64-1
Oscilloscope setting	CH1: 5 V/DIV TIME: 2 ms/DIV
Measurement condition	• After warmed up to normal operating temperature • Engine at racing

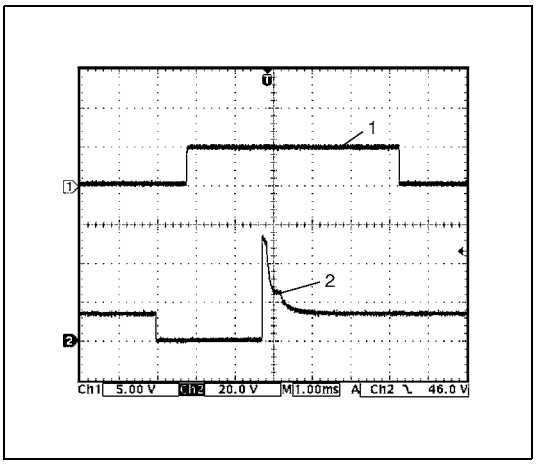

10. Reference waveform No.10

Fuel injector signal at engine idling

Measurement terminal	CH1: C63-10 to C64-1 CH2: C63-6 to C64-1
Oscilloscope setting	CH1: 5 V/DIV, CH2: 20 V/DIV TIME: 1 ms/DIV
Measurement condition	• After warmed up to normal operating temperature • Engine at specified idle speed

1. Cylinder reference signal (CMP reference signal)
2. Fuel injector signal

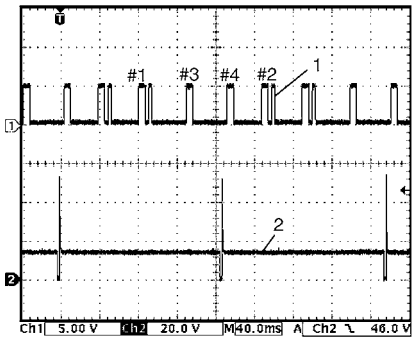

11. Reference waveform No.11

No.4 fuel injector signal at engine idling

Measurement terminal	CH1: C63-10 to C64-1 CH2: C63-4 to C64-1
Oscilloscope setting	CH1: 5 V/DIV, CH2: 20 V/DIV TIME: 40 ms/DIV
Measurement condition	• After warmed up to normal operating temperature • Engine at specified idle speed

1. Cylinder reference signal (CMP reference signal)
2. No.4 fuel injector signal\

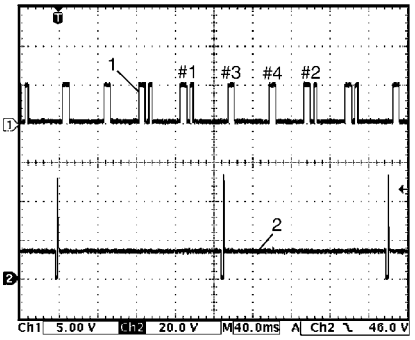

12. Reference waveform No.12

No.3 fuel injector signal at engine idling

Measurement terminal	CH1: C63-10 to C64-1 CH2: C63-5 to C64-1
Oscilloscope setting	CH1: 5 V/DIV, CH2: 20 V/DIV TIME: 40 ms/DIV
Measurement condition	• After warmed up to normal operating temperature • Engine at specified idle speed

1. Cylinder reference signal (CMP reference signal)
2. No.3 fuel injector signal

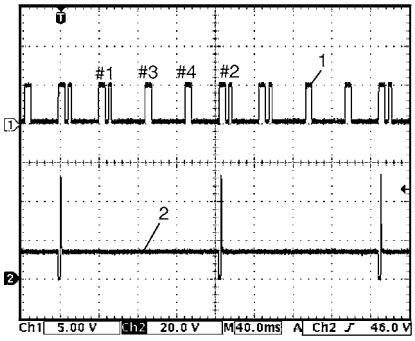

13. Reference waveform No.13

No.2 fuel injector signal at engine idling

Measurement terminal	CH1: C63-10 to C64-1 CH2: C63-6 to C64-1
Oscilloscope setting	CH1: 5 V/DIV, CH2: 20 V/DIV TIME: 40 ms/DIV
Measurement condition	• After warmed up to normal operating temperature • Engine at specified idle speed

1. Cylinder reference signal (CMP reference signal)
2. No.2 fuel injector signal

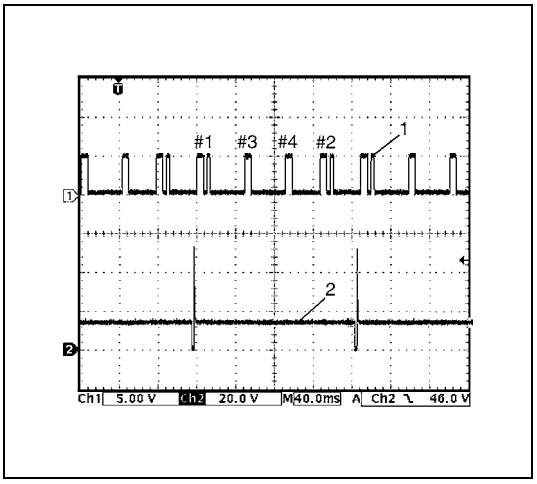

14. Reference waveform No.14

No.1 fuel injector signal at engine idling

Measurement terminal	CH1: C63-10 to C64-1 CH2: C63-7 to C64-1
Oscilloscope setting	CH1: 5 V/DIV, CH2: 20 V/DIV TIME: 40 ms/DIV
Measurement condition	• After warmed up to normal operating temperature • Engine at specified idle speed

1. Cylinder reference signal (CMP reference signal)
2. No.1 fuel injector signal

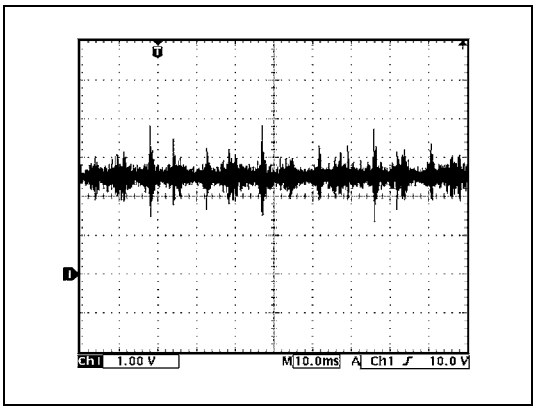

15. Reference waveform No.15

Knock sensor signal at engine speed 4000 r/min.

Measurement terminal	CH1: C63-9 to C64-1
Oscilloscope setting	CH1: 1 V/DIV TIME: 10 ms/DIV
Measurement condition	• After warmed up to normal operating temperature • Run engine at 4000 r/min.

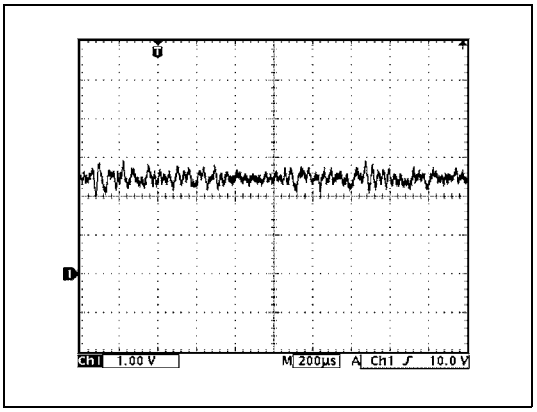

16. Reference waveform No.16

Knock sensor signal at engine speed 4000 r/min.

Measurement terminal	CH1: C63-9 to C64-1
Oscilloscope setting	CH1: 1 V/DIV TIME: 200 µs/DIV
Measurement condition	• After warmed up to normal operating temperature • Run engine at 4000 r/min.

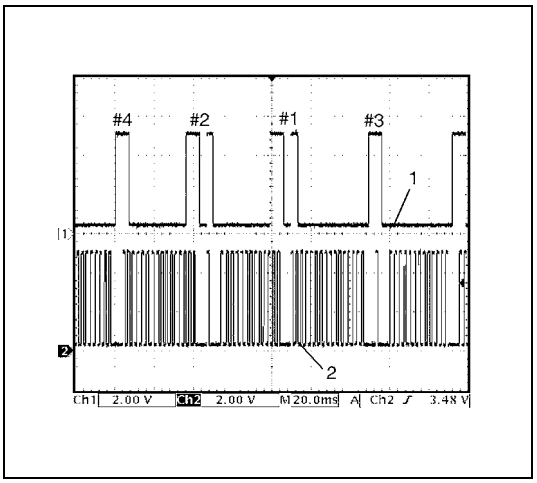

17. Reference waveform No.17

CMP sensor signal at engine idling

Measurement terminal	CH1: C63-10 to C64-1 CH2: C63-30 to C64-1
Oscilloscope setting	CH1: 2 V/DIV, CH2: 2 V/DIV TIME: 20 ms/DIV
Measurement condition	• After warmed up to normal operating temperature • Engine at specified idle speed

1. Cylinder reference signal (CMP reference signal)
2. CKP signal

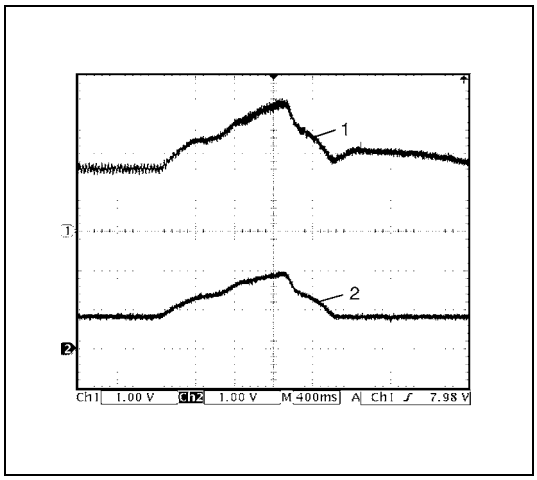

18. Reference waveform No.18

Mass air flow sensor signal at engine racing

Measurement terminal	CH1: C63-14 to C63-28 CH2: C63-34 to C63-28
Oscilloscope setting	CH1: 1 V/DIV, CH2: 1 V/DIV TIME: 400 ms/DIV
Measurement condition	• After warmed up to normal operating temperature • Engine racing

1. Mass air flow sensor signal
2. Throttle position sensor signal

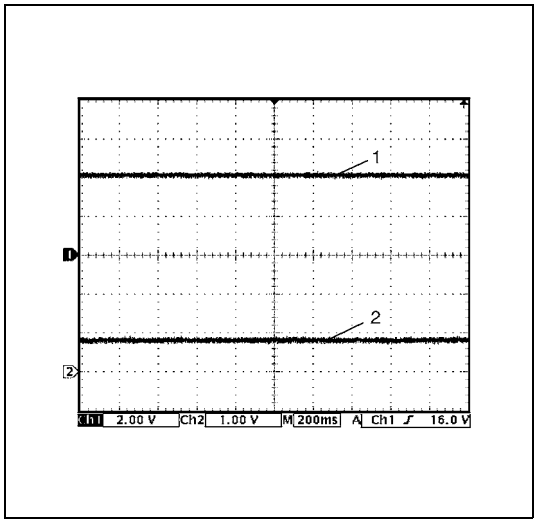

19. Reference waveform No.19

Manifold absolute pressure sensor signal at ignition switch turned ON

Measurement terminal	CH1: C63-15 to C63-28 CH2: C63-34 to C63-28
Oscilloscope setting	CH1: 2 V/DIV, CH2: 2 V/DIV TIME: 200 ms/DIV
Measurement condition	• After warmed up to normal operating temperature • Ignition switch turned ON

1. Manifold absolute pressure sensor signal
2. Throttle position sensor signal

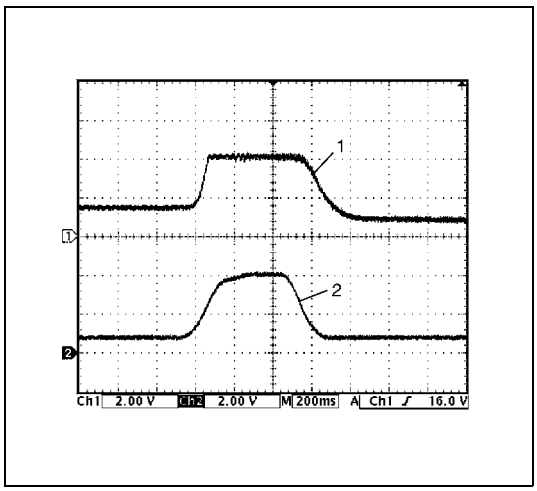

20. Reference waveform No.20

Manifold absolute pressure sensor signal at engine racing

Measurement terminal	CH1: C63-15 to C63-28 CH2: C63-34 to C63-28
Oscilloscope setting	CH1: 2 V/DIV, CH2: 2 V/DIV TIME: 200 ms/DIV
Measurement condition	• After warmed up to normal operating temperature • Engine racing

1. Manifold absolute pressure sensor signal
2. Throttle position sensor signal

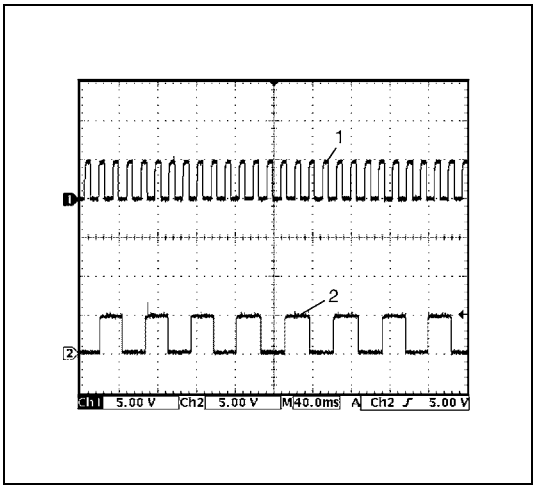

21. Reference waveform No.21

VSS signal at 30 km/h (19 mil/h)

Measurement terminal	CH1: G91-31 to C64-1 CH2: C63-19 to C64-1
Oscilloscope setting	CH1: 5 V/DIV, CH2: 5 V/DIV TIME: 40 ms/DIV
Measurement condition	• After warmed up to normal operating temperature • Drive vehicle at 30 km/h (19 mil/h)

1. VSS signal for speedometer
2. VSS signal

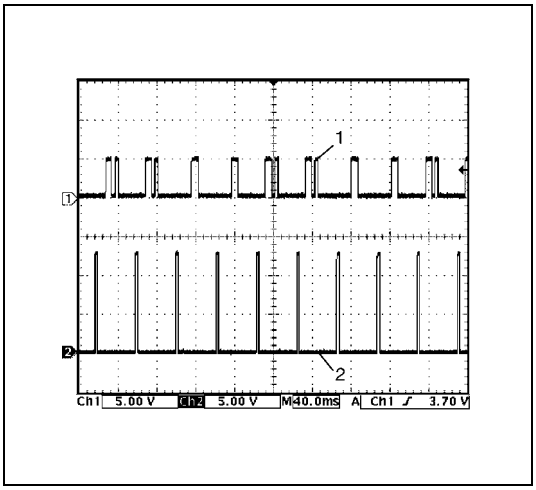

22. Reference waveform No.22

Ignition pulse (engine revolution) signal at engine idling

Measurement terminal	CH1: G63-10 to C64-1 CH2: G91-12 to C64-1
Oscilloscope setting	CH1: 5 V/DIV, CH2: 5 V/DIV TIME: 40 ms/DIV
Measurement condition	• After warmed up to normal operating temperature • Engine at specified idle speed

1. Cylinder reference signal (CMP reference signal)
2. Ignition pulse signal

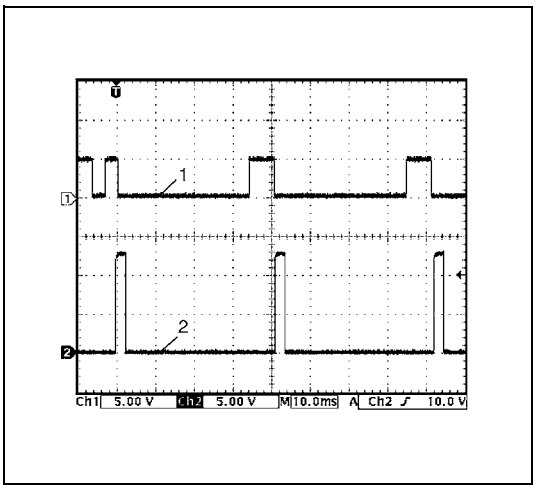

23. Reference waveform No.23

Ignition pulse (engine revolution) signal at engine idling

Measurement terminal	CH1: G63-10 to C64-1 CH2: G91-12 to C64-1
Oscilloscope setting	CH1: 5 V/DIV, CH2: 5 V/DIV TIME: 10 ms/DIV
Measurement condition	• After warmed up to normal operating temperature • Engine at specified idle speed

1. Cylinder reference signal (CMP reference signal)
2. Ignition pulse signal

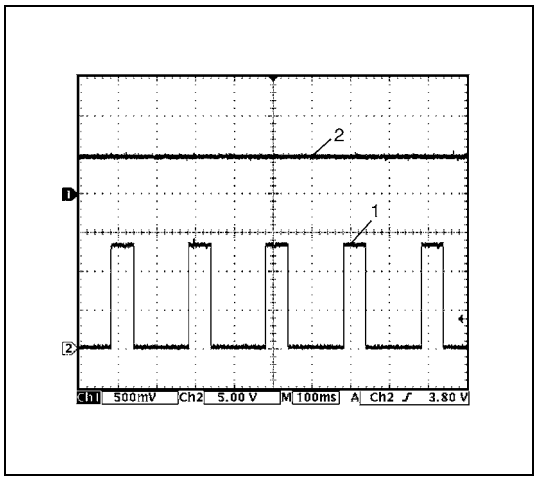

24. Reference waveform No.24

Engine coolant temperature signal at engine idling

Measurement terminal	CH1: C63-16 to C63-28 CH2: G91-32 to C64-1
Oscilloscope setting	CH1: 500 mV/DIV, CH2: 5 V/DIV TIME: 100 ms/DIV
Measurement condition	• After warmed up to normal operating temperature • Engine at specified idle speed

1. Engine coolant temperature signal for combination meter
2. Engine coolant temperature sensor signal

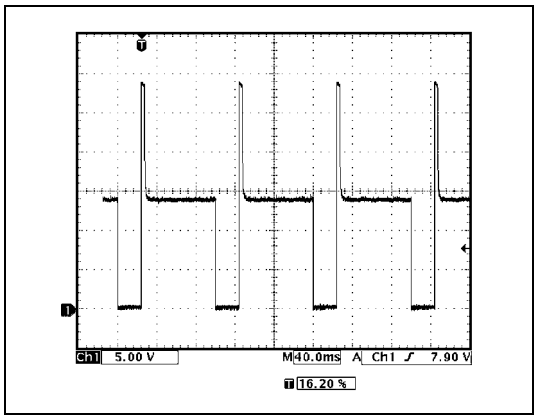

25. Reference waveform No.25

EVAP canister purge valve signal

Measurement terminal	CH1: G64-13 to C64-1
Oscilloscope setting	CH1: 5 V/DIV TIME: 40 ms/DIV
Measurement condition	• After warmed up to normal operating temperature • Drive vehicle at 40 km/h (25 mil/h) or more

Resistance Check

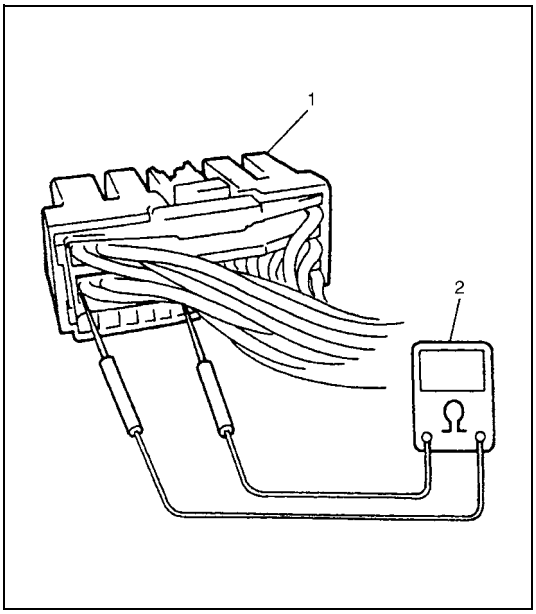

1) Disconnect ECM couplers (1) from ECM with ignition switch OFF.

CAUTION:
Never touch terminals of ECM itself or connect voltmeter or ohmmeter (2).

2) Check resistance between each pair of terminals of disconnected couplers as listed in the following table.

CAUTION:
- **Be sure to connect ohmmeter probe from wire harness side of coupler.**
- **Be sure to turn OFF ignition switch for this check.**
- **Resistance in table below represents that when parts temperature is 20°C (68°F).**

TERMINALS	CIRCUIT	STANDARD RESISTANCE	CONDITION
C64-3 to G91-28	Heater of HO2S–2	4 – 15 Ω	–
G91-4 to G91-5/6	Radiator fan relay	160 – 240 Ω	–
G64-15 to G91-28	Main relay	160 – 240 Ω	Battery disconnected and ignition switch ON
C64-14 to G91-28	Fuel pump relay	160 – 240 Ω	–
C64-5 to G91-5/6	A/C condenser fan relay No.2 (if equipped)	100 – 150 Ω	–
C63-5 to G91-5/6	No.3 fuel injector	10.8 – 18.2 Ω	–
C63-4 to G91-5/6	No.4 fuel injector		
C64-17 to G91-5/6	EGR valve (stepping motor No.1 coil)	20 – 29 Ω	–
C64-13 to G91-5/6	EVAP canister purge valve	28 – 35 Ω	–
C63-6 to G91-5/6	No.2 fuel injector	10.8 – 18.2 Ω	–
C64-34 to G91-5/6	EGR valve (stepping motor No.2 coil)	20 – 31 Ω	–
C64-33 to G91-5/6	EGR valve (stepping motor No.4 coil)		
C64-16 to G91-5/6	EGR valve (stepping motor No.3 coil)		
C64-4 to G91-28	Heater of HO2S–1	2 – 11 Ω	–
C63-7 to G91-5/6	No.1 fuel injector	10.8 – 18.2 Ω	–
C64-10 to G91-5/6	Idle air control valve (stepper motor coil 1)	24 – 35 Ω	–
C64-9 to G91-5/6	Idle air control valve (stepper motor coil 2)	24 – 35 Ω	–
C64-8 to G91-5/6	Idle air control valve (stepper motor coil 3)	24 – 35 Ω	–
C64-28 to G91-5/6	Idle air control valve (stepper motor coil 4)	24 – 35 Ω	–
C64-11 to G91-5/6	A/C compressor relay (if equipped)	160 – 240 Ω	–
C63-2 to G91-5/6	Oil control valve	6 – 15 Ω	–

COMPONENT LOCATION

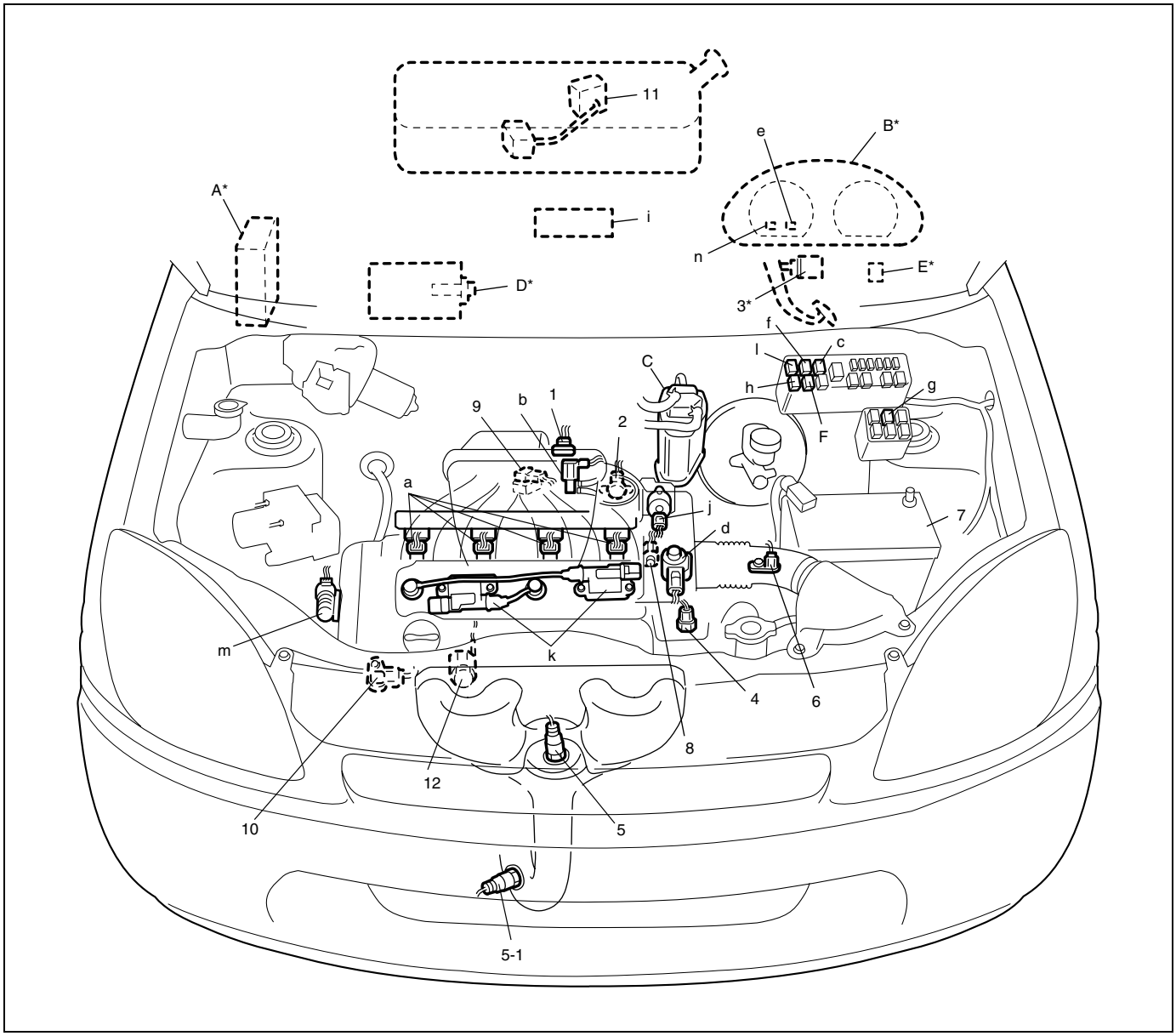

INFORMATION SENSORS	CONTROL DEVICES	OTHERS
1. MAF and IAT sensor	a: Fuel injector	A: ECM
2. TP sensor	b: EVAP canister purge valve	B: Combination meter
3. Stop lamp switch	c: Fuel pump relay	C: EVAP canister
4. ECT sensor	d: EGR valve	D: A/C evaporator inlet air temp. sensor (if equipped)
5. Heated oxygen sensor–1	e: Malfunction indicator lamp	E: Data link connector
5-1. Heated oxygen sensor–2	f: A/C condenser fan relay No.1 (if equipped)	F: A/C compressor relay (if equipped)
6. VSS	g: A/C condenser fan relay No.2 (if equipped)	
7. Battery	h: Radiator fan control relay	
8. CMP sensor	i: Fuel cost meter	
9. MAP sensor	j: IAC valve	
10. CKP sensor	k: Ignition coil assembly (with ignitor)	
11. Fuel level sensor	l: Main relay	
12. Knock sensor	m: Oil control valve	
	n: Immobilizer indicator lamp	

NOTE:

Above figure shows left-hand steering vehicle. For right-hand steering vehicle, parts with (*) are installed at the opposite side.

Table A-1 Malfunction Indicator Lamp Circuit Check – Lamp Does Not Come "ON" with Ignition Switch ON (But Engine Stops)

WIRING DIAGRAM

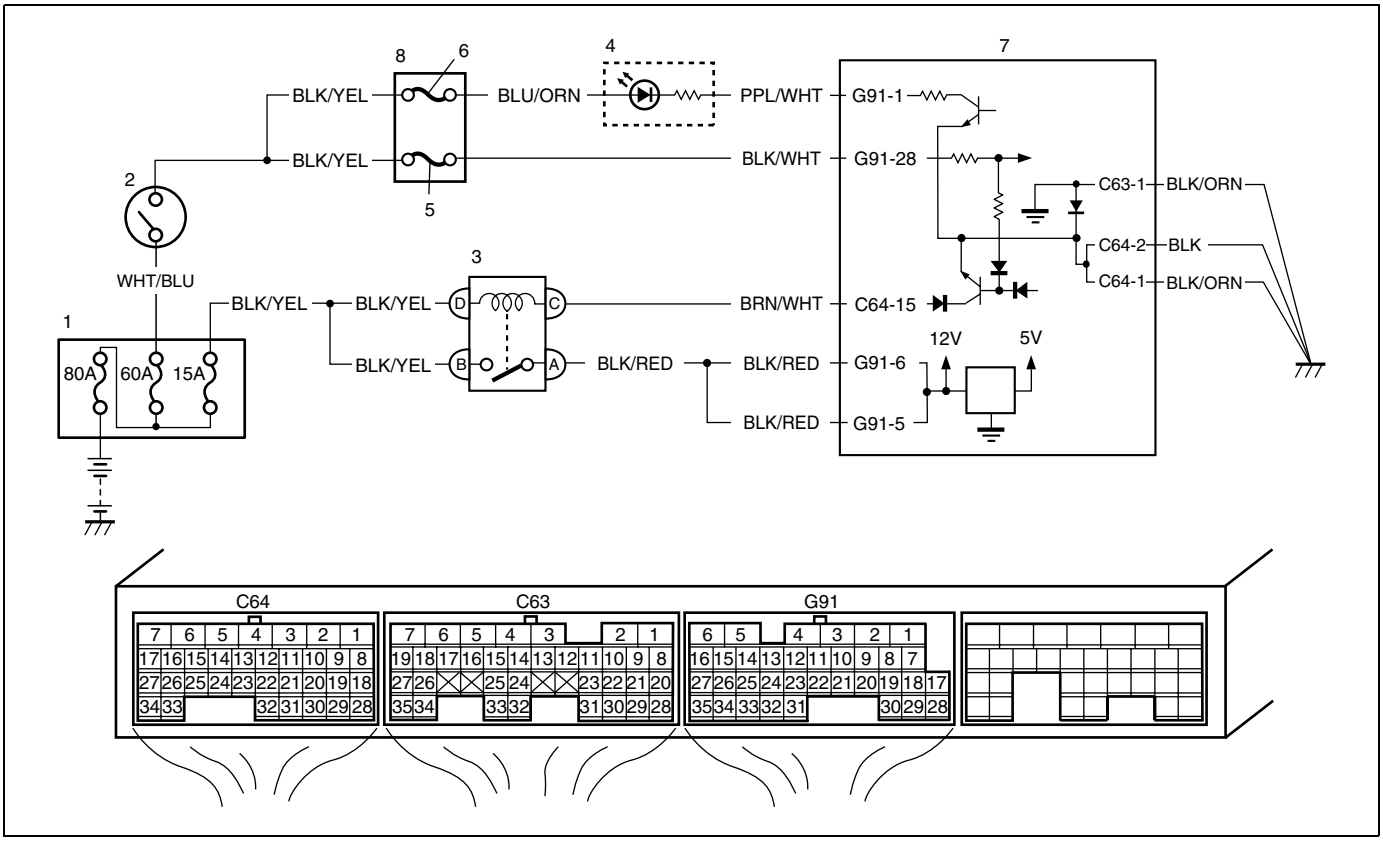

1. Relay/fuse box	4. Malfunction indicator lamp in combination meter	7. ECM
2. Ignition switch	5. "IG" fuse	8. Circuit fuse box
3. Main relay	6. "METER" fuse	

CIRCUIT DESCRIPTION

When the ignition switch is turned ON, ECM causes the main relay to turn ON (close the contact point). Then, ECM being supplied with the main power, turns ON the malfunction indicator lamp (MIL). When the engine starts to run and no malfunction is detected in the system, MIL goes OFF but if a malfunction was or is detected, MIL remains ON even when the engine is running.

TROUBLESHOOTING

Step	Action	Yes	No
1	MIL Power Supply Check 1) Turn ignition switch to ON position. Do other warning lights come ON?	Go to Step 4.	Go to Step 2.
2	METER Fuse Check 1) Turn ignition switch to OFF position. 2) Check for fuse blow at "METER" fuse. Is "METER" fuse in good condition?	Go to Step 3.	Replace "METER" fuse and check for short.

Step	Action	Yes	No
3	MIL Power Supply Check 1) Disconnect ignition switch connector. 2) Remove "METER" fuse. 3) Measure resistance between "BLK/YEL" wire terminal of ignition switch connector and "BLK/YEL" wire terminal of "METER" fuse connector. Is resistance 1 Ω or less?	Go to Step 4.	"BLK/YEL" wire circuit open or poor connection.
4	MIL Power Supply Check 1) Connect ignition switch connector. 2) Install "METER" fuse. 3) Remove combination meter referring to "Combination Meter Removal and Installation" in Section 8. 4) Check for proper connection to combination meter connector at "BLU/ORN" wire and "PPL/WHT" wire terminals. 5) If OK, then turn ignition switch to ON position and measure voltage between combination meter connector at "BLU/ORN" wire terminal and body ground. Is it 10 – 14 V?	Go to Step 5.	"BLU/ORN" wire circuit open.
5	MIL Circuit Check 1) Turn ignition switch OFF position. 2) Disconnect ECM connector "G91". 3) Check for proper connection to ECM connector at "G91-1" wire terminal. 4) Measure resistance between "PPL/WHT" wire terminal of combination meter connector and "G91-1" wire terminal of ECM connector. Is resistance 1 Ω or less?	Go to Step 6.	"PPL/WHT" wire circuit open.
6	MIL Circuit Check 1) Connect combination meter connectors. 2) Turn ignition switch to ON position. 3) Using service wire, ground "G91-1" terminal wire of disconnected ECM connector. Does MIL turn ON?	Substitute a known-good ECM and recheck.	Replace combination meter.

Table A-2 Malfunction Indicator Lamp Circuit Check-lamp Remains "ON" after Engine Starts

WIRING DIAGRAM

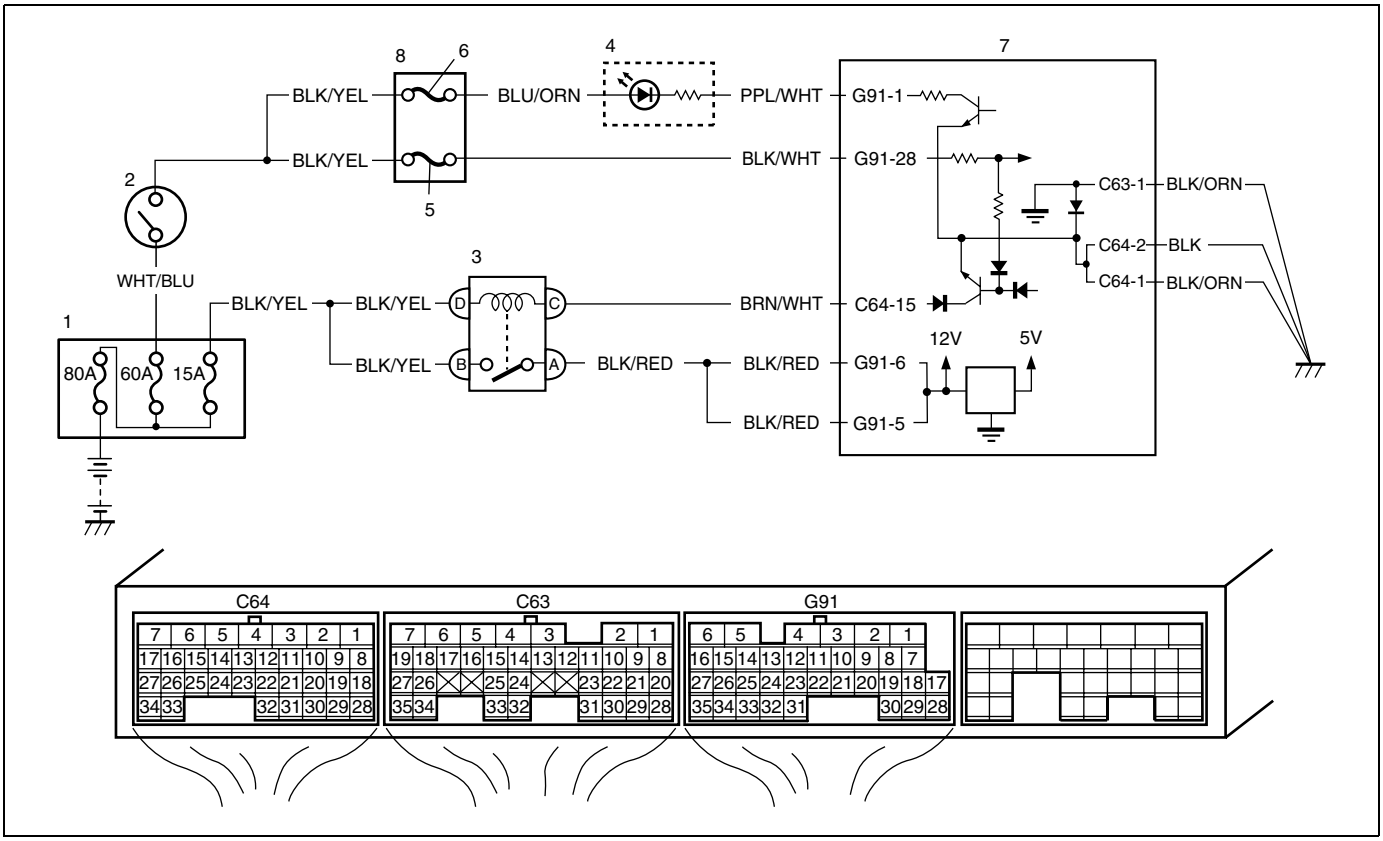

1. Relay/fuse box	4. Malfunction indicator lamp in combination meter	7. ECM
2. Ignition switch	5. "IG" fuse	8. Circuit fuse box
3. Main relay	6. "METER" fuse	

CIRCUIT DESCRIPTION

When the ignition switch is turned ON, ECM causes the main relay to turn ON (close the contact point). Then, ECM being supplied with the main power, turns ON the malfunction indicator lamp (MIL). When the engine starts to run and no malfunction is detected in the system, MIL goes OFF but if a malfunction was or is detected, MIL remains ON even when the engine is running.

TROUBLESHOOTING

Step	Action	Yes	No
1	DTC Check 1) Check DTC referring to "Diagnostic Trouble Code (DTC) Check" in this section. Is there any DTC(s)?	Go to Step 2 of "Engine and Emission Control System Check" in this section.	Go to Step 2.
2	DTC Check 1) Start engine and recheck DTC while engine running. Is there any DTC(s)?	Go to Step 2 of "Engine and Emission Control System Check" in this section.	Go to Step 3.

Step	Action	Yes	No
3	MIL Circuit Check 1) Turn ignition switch to OFF position. 2) Remove combination meter referring to “Combination Meter Removal and Installation” in Section8. 3) Disconnect connectors from ECM. 4) Measure resistance between “PPL/WHT” wire terminal of combination meter connector and body ground. Is resistance infinity?	Go to Step 4.	“PPL/WHT” wire circuit shorted to ground.
4	MIL Circuit Check 1) Connect connectors to combination meter. Does MIL turn ON at ignition switch turned ON?	Replace combination meter.	Substitute a known-good ECM and recheck.

Table A-3 ECM Power and Ground Circuit Check-MIL Doesn't Light with Ignition Switch ON and Engine Doesn't Start Though It Is Cranked Up

WIRING DIAGRAM

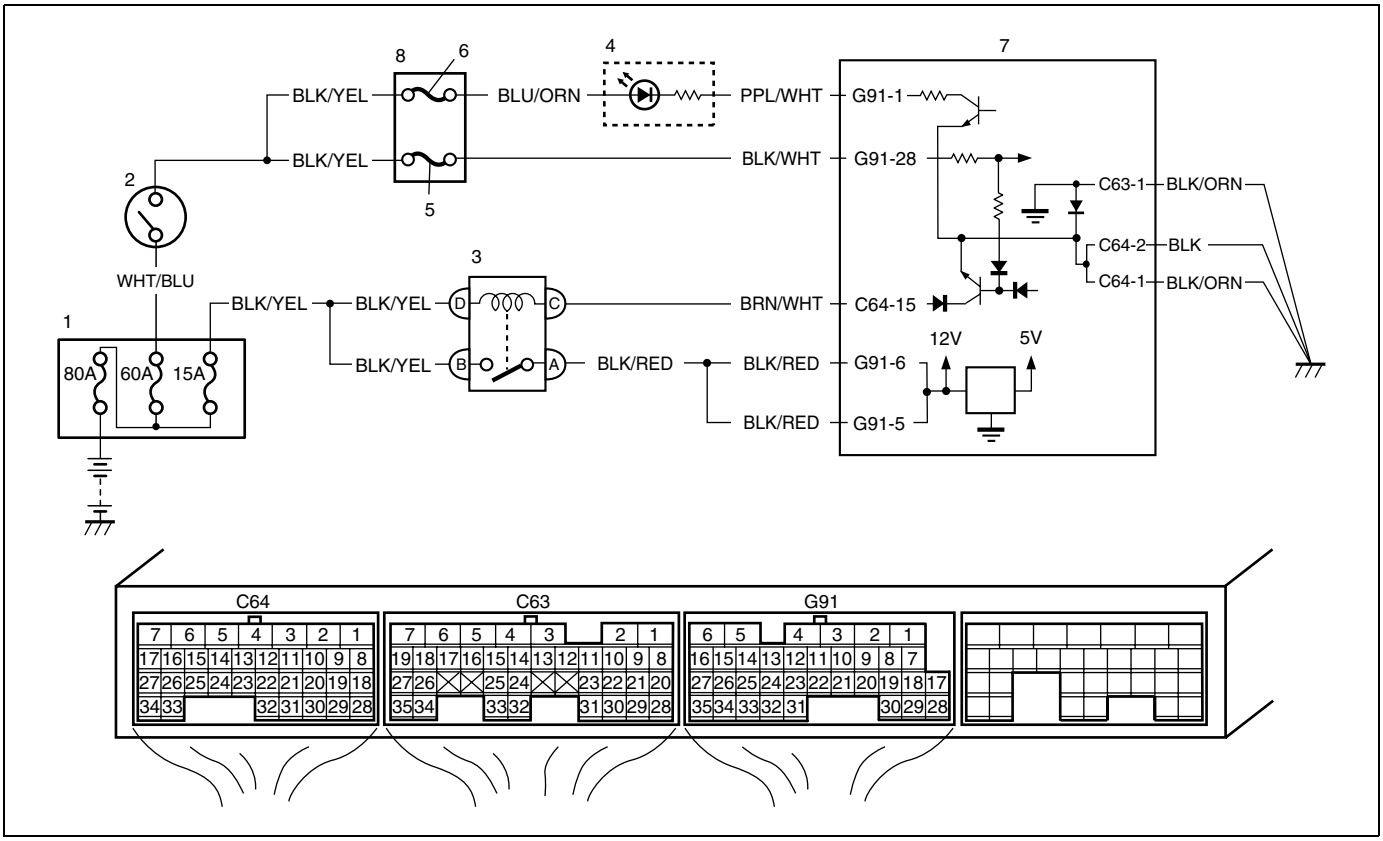

1. Relay/fuse box	4. Malfunction indicator lamp in combination meter	7. ECM
2. Ignition switch	5. "IG" fuse	8. Circuit fuse box
3. Main relay	6. "METER" fuse	

CIRCUIT DESCRIPTION

When the ignition switch tuned ON, the main relay turns ON (the contact point closes) and the main power is supplied to ECM.

TROUBLESHOOTING

Step	Action	Yes	No
1	IG Fuse Check 1) Disconnect connectors from ECM with ignition switch turned OFF. 2) Check for proper connection to ECM connector at "G91-1", "G91-28", "C64-15", "G91-6", "G91-5", "C63-1", "C64-1" and "C64-2" wire terminals. 3) If OK, check "IG" fuse for fuse blow. Is "IG" fuse in good condition?	Go to Step 2.	Replace fuse and check for short in circuits connected to this fuse.
2	Ignition Signal Check 1) Turn ignition switch to ON position. 2) Measure voltage between "G91-28" wire terminal of ECM connector and body ground. Is voltage 10 – 14 V?	Go to Step 3.	"BLK/WHT" or "BLK/YEL" wire circuit open.

Step	Action	Yes	No
3	Main Relay Circuit Check 1) Turn ignition switch to OFF position. 2) Check for fuse blow at main fuse (15 A). (See Fig. 1.) 3) If OK, measure voltage between “C64-15” wire terminal of ECM connector and body ground. Is voltage 10 – 14 V?	Go to Step 4.	Go to Step 8.
4	Main Relay Circuit Check 1) Remove ECM from vehicle body and connect connectors to ECM. 2) Turn ignition switch to ON position. 3) Measure voltage between “C64-15” wire terminal of ECM connector and body ground. Is voltage 0 – 1 V?	Go to Step 6.	Go to Step 5.
5	ECM Ground Circuit Check 1) Turn ignition switch to OFF position. 2) Disconnect connectors from ECM. 3) Measure resistance between each “C63-1”, “C64-1” and “C64-2” wire terminals of ECM connector and body ground. Is resistance 1 Ω or less?	Substitute a known-good ECM and recheck.	“BLK/ORN” or “BLK” wire open circuit or high resistance circuit.
6	Main Relay Circuit Check 1) Disconnect connectors from ECM with ignition switch turned OFF. 2) Using service wire, ground “C64-15” wire terminal of ECM connector and measure voltage between each “G91-5” and “G91-6” wire terminals of ECM connector and body ground. Is voltage 10 – 14 V?	Substitute a known-good ECM and recheck.	Go to Step 7.
7	Main Relay Circuit Check 1) Remove main relay from relay/fuse box. (See Fig. 2.) 2) Check for proper connection to main relay connector at “BLK/YEL” and “BLK/RED” wire terminals. 3) If OK, measure resistance between each “G91-5” and “G91-6” wire terminals of ECM connector and “BLK/RED” wire terminal of main relay connector. Is resistance 1Ω or less?	Go to Step 8.	“BLK/RED” wire open circuit or high resistance circuit.
8	Main Relay Circuit Check 1) Remove main relay from relay/fuse box. 2) Measure voltage between “BLK/YEL” wire terminals of main relay connector and body ground. Is voltage 10 – 14 V?	Go to Step 9.	“BLK/YEL” wire circuit open.

Step	Action	Yes	No
9	Main Relay Check 1) Measure resistance between each two terminals of main relay. (See Fig. 3). Between main relay terminals "A" and "B": Infinity "C" and "D": 160 – 240 Ω at 20°C (68°F) 2) Check that there is continuity between terminals "A" and "B" when battery is connected to terminals "C" and "D" (See Fig. 4). Is main relay in good condition?	"BRN/WHT" wire open circuit or high resistance circuit.	Replace main relay.

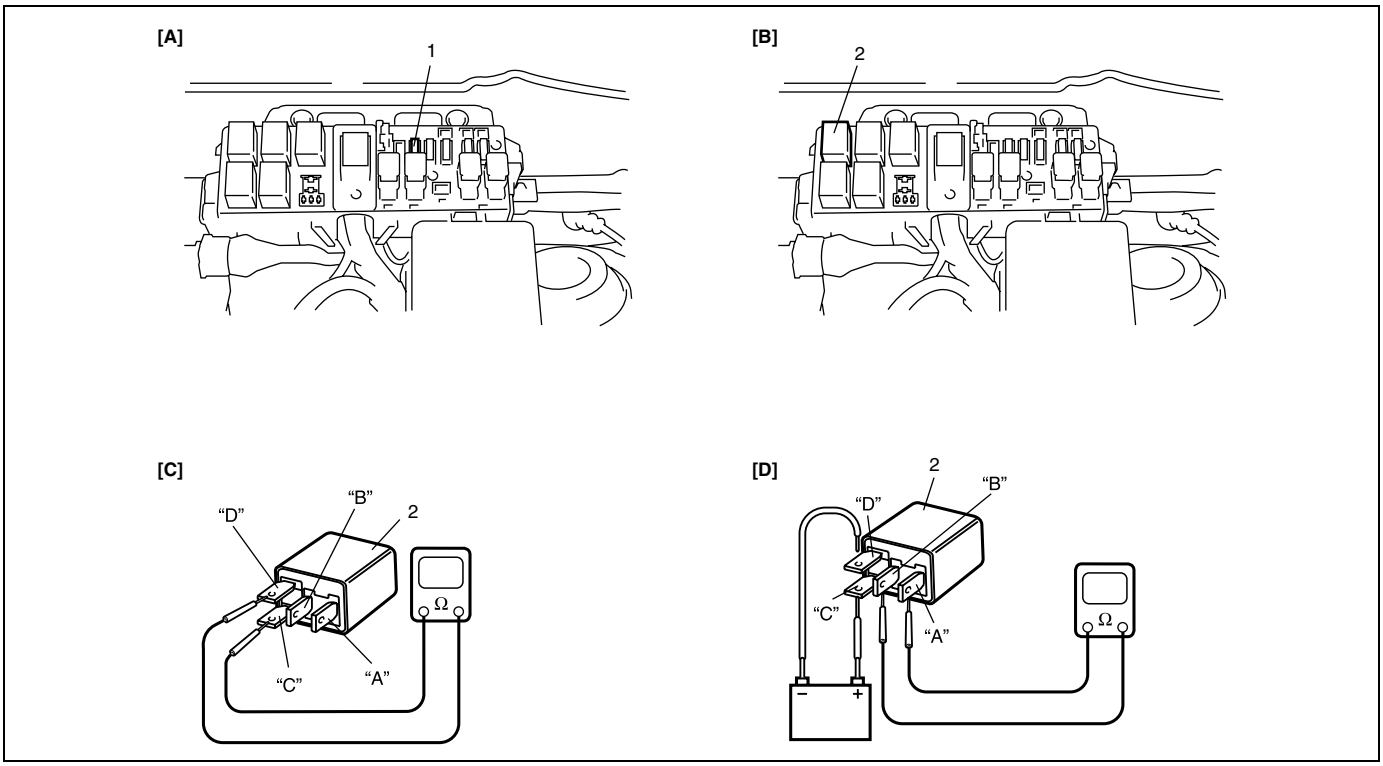

[A]: Fig. 1 for Step 3	[C]: Fig. 3 for Step 9	1. Main fuse (15 A)
[B]: Fig. 2 for Step 7	[D]: Fig. 4 for Step 9	2. Main relay

DTC P0010 Camshaft Position Actuator Circuit

WIRING DIAGRAM

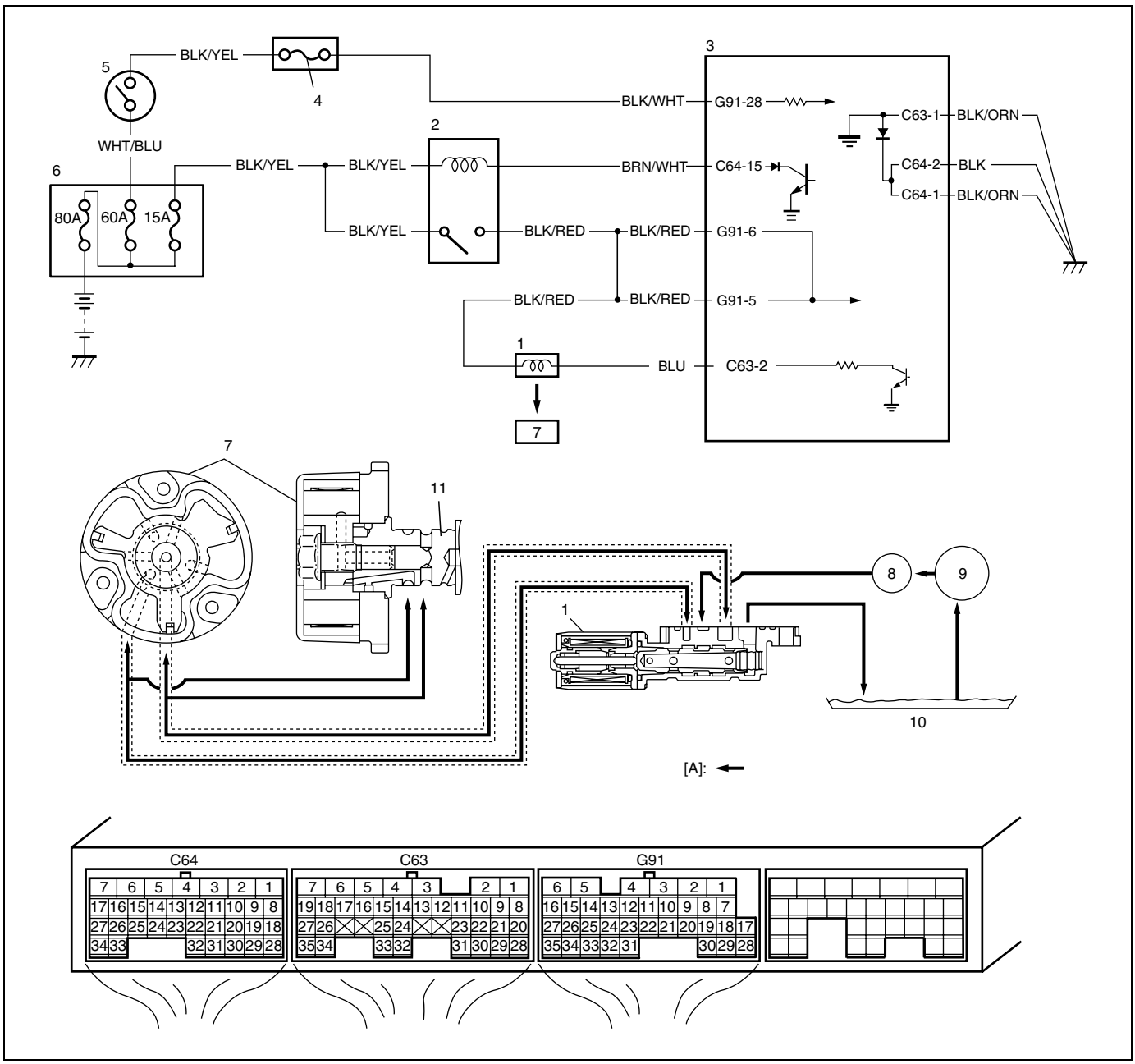

[A]: Oil flow	3. ECM	6. Relay/fuse box	9. Oil pump
1. Oil control valve	4. "IG" fuse	7. Camshaft timing sprocket	10. Oil pan
2. Main relay	5. Ignition switch	8. Oil filter	11. Intake camshaft

CIRCUIT DESCRIPTION

Actual valve timing fails to become close to target advance level of each function although advance control function or retarded advance control function is at work.

DTC DETECTING CONDITION AND TROUBLE AREA

DTC DETECTING CONDITION	TROUBLE AREA
Monitor signal of oil control valve is different from command signal. (Circuit open or short) (2 driving cycle detection logic)	• Oil control valve • Oil control valve circuit • ECM

DTC CONFIRMATION PROCEDURE

NOTE:

Check to make sure that the following conditions are satisfied when using this DTC CONFIRMATION PROCEDURE.

- **Intake air temperature: –7°C (19.4°F) or higher**
- **Engine coolant temperature: –7°C (19.4°F) or higher**
- **Altitude (barometric pressure): 2400 m, 8000 ft or less (560 mmHg, 75 kPa or more)**

1) Clear DTC. Refer to “Diagnostic Trouble Code (DTC) Clearance”.
2) Start engine.
3) Maintain engine speed at 2000 r/min. or higher for 5 seconds.
4) Check DTC. Refer “Diagnostic Trouble Code (DTC) Check”.

TROUBLESHOOTING

Step	Action	Yes	No
1	Was “Engine and Emission Control System Check” performed?	Go to Step 2.	Go to “Engine and Emission Control System Check” in this section.
2	Check oil control valve power supply circuit. 1) Turn OFF ignition switch, disconnect connector from oil control valve. 2) Turn ignition switch ON, measure voltage between “BLK/RED” wire terminal of oil control valve connector and engine ground. Is voltage 10 – 14 V?	Go to Step 3.	“BLK/RED” wire open circuit.
3	Check wire circuit. 1) Turn OFF ignition switch, disconnect connectors from ECM. 2) Check for proper connection to “C63-2” wire terminal of ECM connector. 3) If OK, measure resistance between “C63-2” wire terminal of ECM connector and vehicle body ground. Is resistance infinity?	Go to Step 4.	“BLU” wire shorted to ground circuit.
4	Check wire circuit. 1) Turn ignition switch ON, measure voltage between “C63-2” wire terminal of ECM connector and engine ground. Is voltage 0 V?	Go to Step 5.	“BLU” wire shorted to power supply circuit.
5	Check wire circuit. 1) Turn OFF ignition switch, connect connector to oil control valve. 2) Turn ignition switch ON, measure voltage between “C63-2” wire terminal of ECM connector and engine ground. Is voltage 10 – 14 V?	Go to Step 6.	“BLU” wire open circuit.
6	Check oil control valve. 1) Check oil control valve referring to “Oil control valve inspection” in Section 6E1. Is it in good condition?	Go to Step 7.	Replace oil control valve.

Step	Action	Yes	No
7	Check oil control valve control circuit. 1) Check for proper connection to “G91-5” and “G91-6” wire terminals of ECM connector. 2) Turn OFF ignition switch, measure resistance between each “G91-5” and “G91-6” wire terminals of ECM connector and “C63-2” wire terminal of ECM connector. Is resistance 6 – 8.5 Ω at 20°C, 68°F?	Substitute a known-good ECM and recheck.	“BLK/RED” wire and/or “BLU” wire in high resistance circuit.

DTC P0011 Camshaft Position – Timing Over-Advanced or System Performance
DTC P0012 Camshaft Position – Timing Over-Retarded

DESCRIPTION

Actual value of advanced valve timing does not reach target value.
Valve timing is advanced although ECM command is most retarding.

DTC DETECTING CONDITION AND TROUBLE AREA

DTC DETECTING CONDITION	TROUBLE AREA
Actual valve of advanced valve timing does not reach target value, or valve timing is advanced although ECM command is most retarding. (1 driving cycle detection logic)	• Oil control valve • Oil galleries of timing sprocket • Intake camshaft timing sprocket (VVT actuator)

DTC CONFIRMATION PROCEDURE

NOTE:

Check to make sure that the following conditions are satisfied when using this DTC CONFIRMATION PROCEDURE.

- **Intake air temperature: –7°C (19.4°F) or higher**
- **Engine coolant temperature: –7°C (19.4°F) or higher**
- **Altitude (barometric pressure): 2500 m, 8200 ft or less (540 mmHg, 72 kPa or more)**

1) Clear DTC. Refer to “Diagnostic Trouble Code (DTC) Clearance”
2) Start engine and drive vehicle under usual driving condition for 5 minutes or longer until engine is warmed up to normal operating temperature.
3) Stop vehicle.
4) Run engine at idle speed for 1 minute.
5) Start vehicle and increase vehicle speed up to 80 km/h (50 mile/h).
6) Keep vehicle speed at 80 km/h (50 mile/h) for 1 minute or longer at 5th gear position or D range.
7) Decrease vehicle speed gradually.
8) Stop vehicle and ignition switch OFF.
9) Repeat step 4) to 7) one time.
10) Stop vehicle.

Check DTC. Refer to “Diagnostic Trouble Code (DTC) Check” in this section.

TROUBLESHOOTING

Step	Action	Yes	No
1	Is DTC P0010 detected together?	Go to "DTC P0010 Camshaft Position Actuator Circuit" in this section.	Go to Step 2.
2	Do you have Suzuki Scan Tool?	Go to Step 3.	Go to Step 5.
3	VVT GAP Check 1) With ignition switch turned OFF, connect Suzuki Scan Tool. 2) Start engine and warm up to normal operating temperature. 3) Select menu to DATA LIST. 4) Check that the VVT GAP displayed on Suzuki Scan Tool is 0 – 5°. Is it OK?	Go to Step 4.	Check valve timing referring to "Timing Chain and Chain Tensioner Removal and Installation" in Section 6A1. If OK, go to Step 5.
4	VVT Signal Check 1) Drive vehicle the following condition. • Vehicle speed at 80 km/h (50 mile/h). • Gear position at 5th or D range. 2) Check that the VVT GAP displayed on Suzuki Scan Tool is 0 – 5°. Is it OK?	Substitute a known-good ECM and recheck.	Go to Step 5.
5	Oil Control Circuit Visual Inspection 1) Remove cylinder head cover referring to "Cylinder Head Cover Removal and Installation" in Section 6A1. 2) Check oil pressure leakage from oil control circuit. Is it in good condition?	Go to Step 6.	Repair or replace.
6	Check Oil Control Circuit. 1) Remove oil control valve referring to "Oil control valve" in Section 6A1. 2) Remove oil gallery pipe referring to "Oil gallery pipe" in Section 6A1. 3) Check oil gallery pipe and oil control valve for clog or sludge. Is it in good condition?	Go to Step 7.	Clean oil control valve and oil gallery pipe. Replace oil control valve if a problem is not solved after cleaning oil control valve and oil gallery pipe.
7	Check Oil Control Valve 1) Check oil control valve referring to "Oil control valve inspection" in Section 6E1. Is it in good condition?	Replace camshaft timing sprocket.	Replace oil control valve.

NOTE:

Upon completion of inspection and repair work, perform "DTC Confirmation Procedure" and confirm that the trouble has been corrected.

DTC P0101 Mass Air Flow Circuit Range/Performance

WIRING DIAGRAM

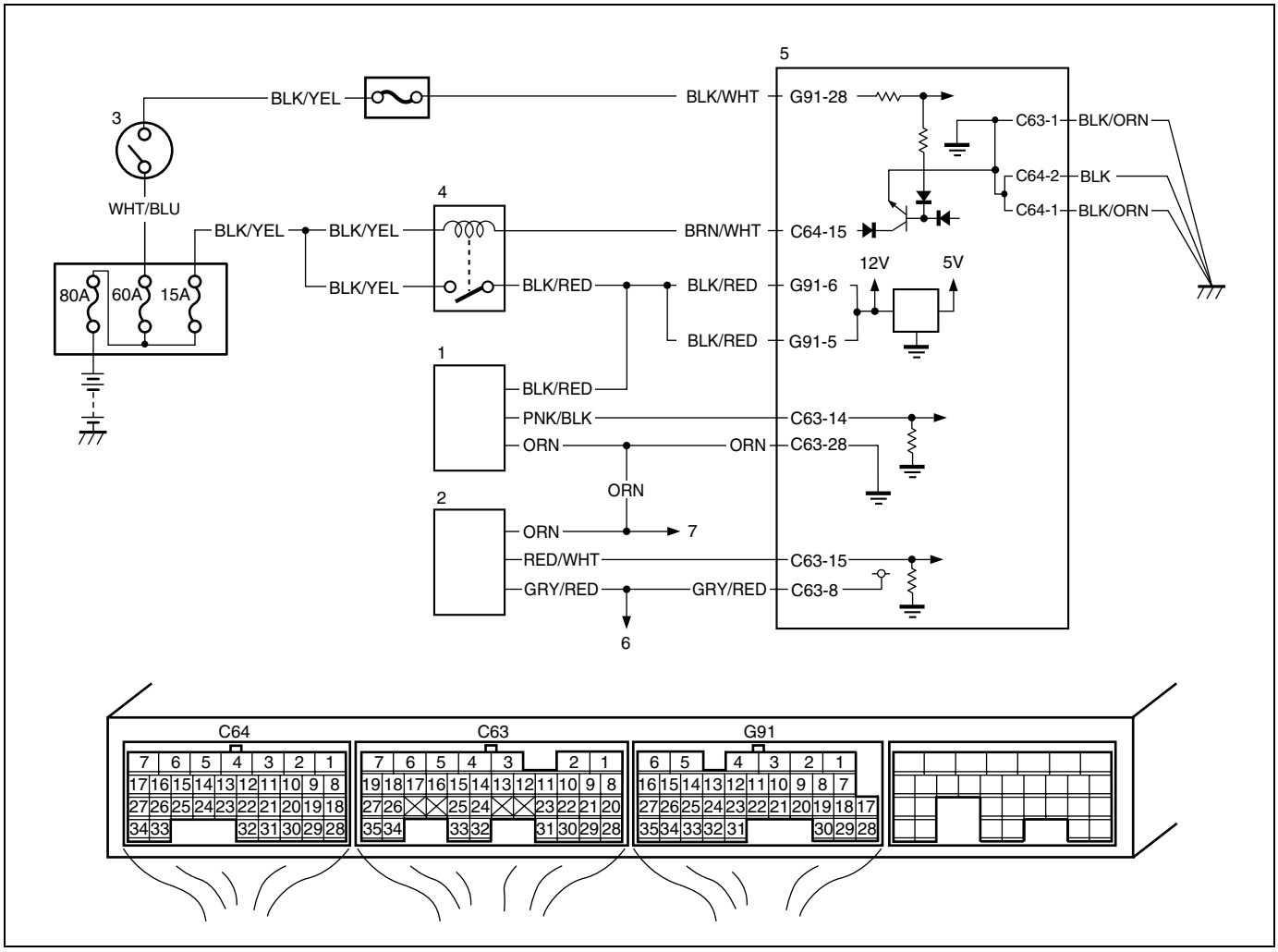

1. MAF and IAT sensor	4. Main relay	7. To other sensors
2. MAP sensor	5. ECM	
3. Ignition switch	6. To TP sensor	

DTC DETECTING CONDITION AND TROUBLE AREA

DTC DETECTING CONDITION	TROUBLE AREA
Even if the voltage of the throttle position sensor changes, the voltage of the mass air flow sensor does not change normally. (2 driving cycle detection logic)	• Air intake system (clog or leakage) • High resistance in the sensor circuit • MAF sensor • TP sensor • ECM

DTC CONFIRMATION PROCEDURE

WARNING:

- **When performing a road test, select a place where there is no traffic or possibility of a traffic accident and very careful during testing to avoid occurrence of an accident.**
- **Road test should be carried out with 2 person, a driver and tester, on a level road.**

NOTE:

Check to make sure that the following conditions are satisfied when using this DTC CONFIRMATION PROCEDURE.

- **Intake air temperature: –7°C (19.4°F) or higher**
- **Engine coolant temperature: –7°C (19.4°F) or higher**
- **Altitude (barometric pressure): 2400 m, 8000 ft or less (560 mmHg, 75 kPa or more)**

1) With ignition switch turned OFF, connect scan tool.
2) Turn ON ignition switch and clear DTC using scan tool.
3) Start engine and warm up to normal operating temperature. (ECT approx. 90 – 95°C, 194 – 203°F)
4) Drive vehicle at 40 km/h (25 mile/h) at 5th gear or D range (engine speed: about 1250 rpm).
5) Increase vehicle speed to 45 km/h (28 mile/h) at 5th gear or D range (engine speed: about 1400 rpm).
6) Release accelerator pedal to decrease vehicle speed till 40 km/h (25 mile/h).
7) Repeat Step 4) to 6) for 5 times.
8) Stop vehicle and check DTC and pending DTC.

TROUBLESHOOTING

Step	Action	Yes	No
1	Was “Engine and Emission Control System Check” performed?	Go to Step 2.	Go to “Engine and Emission Control System Check” in this section.
2	Visual inspection. Check MAF sensor and air intake system for: 1) Objects which block measuring duct and resistor of MAF sensor. 2) Other air flow which does not pass the MAF sensor. Are there in good condition?	Go to Step 3.	Repair or replace.
3	MAF sensor performance check. 1) With ignition switch turned OFF, install scan tool. 2) Start engine and warm up to normal operation temperature. 3) Check MAF value using scan tool, under the following conditions. **MAF value specification** **Idling: 1.5 – 4.0 g/sec.** **Racing at 2500 r/min: 5.0 – 10.0 g/sec.** Is each value as specified?	Go to Step 11.	Go to Step 4.
4	MAF sensor output voltage check. 1) Check voltage between “C63-14” and “C63-28” wire terminals under the following conditions. **Voltage between “C63-14” and “C63-28” wire terminals of ECM connector** **Ignition switch ON, leaving engine OFF: 0.5 – 1.2 V** **Idling: 1.3 – 1.8 V** Is each value as specified?	Poor “C63-14” or/and “C63-28” terminal connection. If OK, substitute a known-good ECM and recheck.	Go to Step 5.

Step	Action	Yes	No
5	Check MAF sensor power supply voltage. 1) Disconnect connector from MAF sensor with ignition switch turned OFF. 2) Turn ON ignition switch, measure voltage between engine ground and “BLK/RED” wire terminal of MAF sensor connector. See Fig. 1. Is voltage 10 – 14 V?	Go to Step 6.	“BLK/RED” wire in open circuit.
6	Check MAF sensor ground circuit. 1) Measure resistance between “ORN” wire terminal of MAF sensor connector and engine ground. Is resistance below 5Ω?	Go to Step 8.	Go to Step 7.
7	Check ground circuit. 1) Disconnect connectors from ECM with ignition switch turned OFF. 2) Remove ECM from vehicle body and connect connectors to ECM. 3) Measure resistance between “C63-28” wire terminal of ECM connector and vehicle body ground. Is resistance below 5 Ω?	“ORN” wire in open or high resistance circuit.	ECM grounds “C63-1”, “C64-1” and/or “C64-2” circuit in open or high resistance. If wires are OK, substitute a known-good ECM and recheck.
8	Check MAF sensor signal circuit. 1) Turn ON ignition switch. 2) Measure voltage between “PNK/BLK” wire terminal of MAF sensor connector and engine ground. Is voltage 0 V?	Go to Step 9.	“PNK/BLK” wire shorted to others circuit.
9	Check MAF sensor signal circuit. 1) Disconnect connectors from ECM with ignition switch turned OFF. 2) Measure resistance between “PNK/BLK” wire terminal of MAF sensor connector and vehicle body ground. Is resistance infinity?	Go to Step 10.	“PNK/BLK” wire shorted to ground circuit.
10	Check MAF sensor signal circuit. 1) Measure resistance between “PNK/BLK” wire terminal of MAF sensor connector and “C63-14” wire terminal of ECM connector. Is resistance below 3 Ω?	Faulty MAF sensor.	“PNK/BLK” wire in open or high resistance circuit.
11	Is DTC P0121 detected?	Go to “DTC P0121 Throttle Position Sensor Circuit Range / Performance” in this section.	Substitute a known-good ECM and recheck.

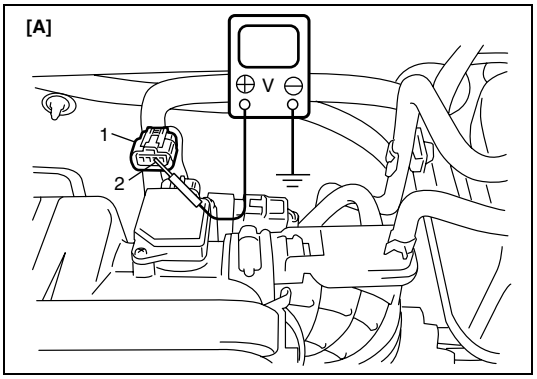

[A]: Fig.1 for Step 5
1. MAF sensor coupler
2. “BLK/RED” wire terminal

DTC P0102 Mass Air Flow Circuit Low Input

WIRING DIAGRAM

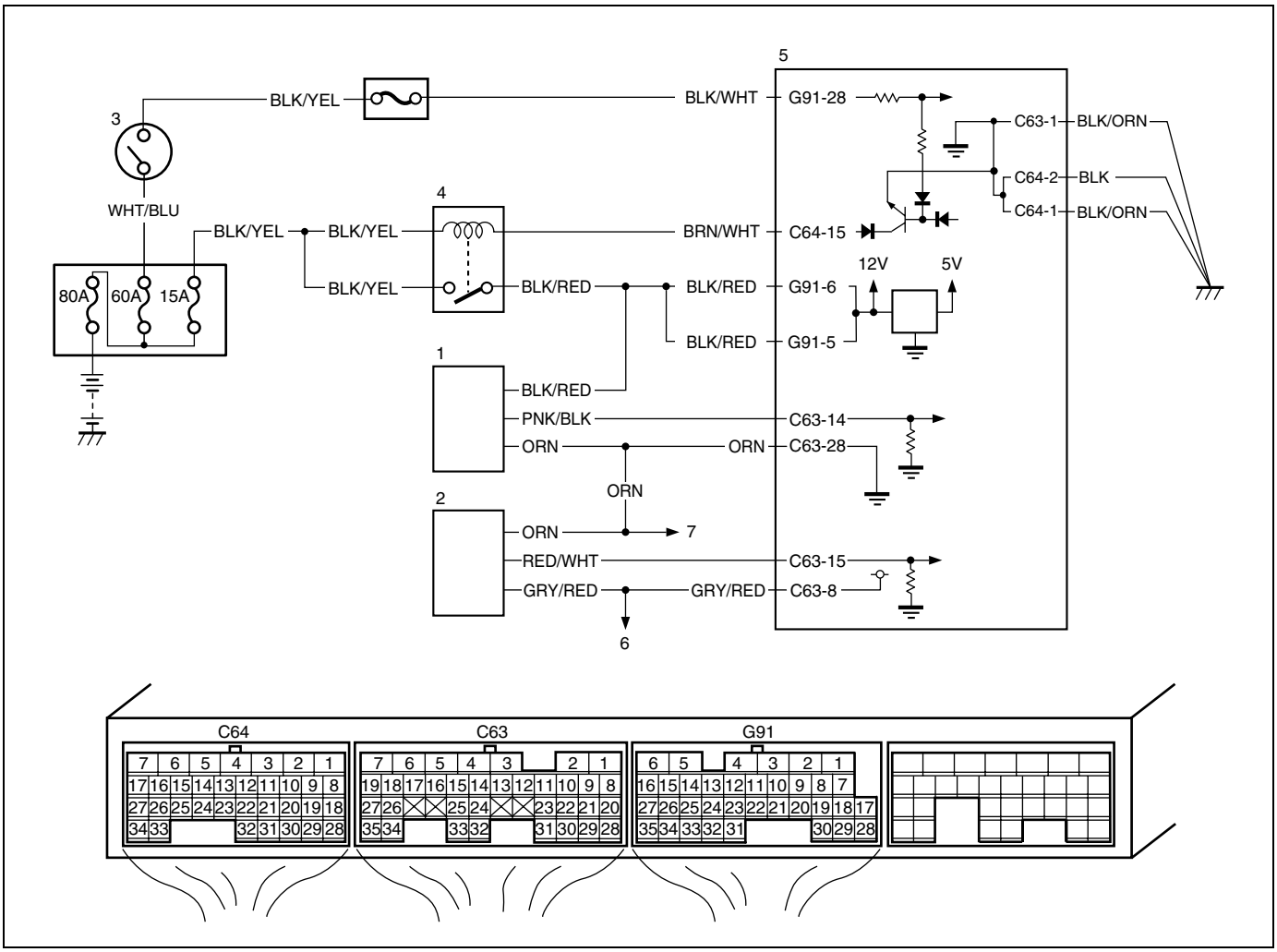

1. MAF and IAT sensor	4. Main relay	7. To other sensors
2. MAP sensor	5. ECM	
3. Ignition switch	6. To TP sensor	

DTC DETECTING CONDITION AND TROUBLE AREA

DTC DETECTING CONDITION	TROUBLE AREA
DTC will be set when all of the following conditions are detected for 5 seconds continuously. • Engine is running • Current of MAF sensor output is less than the specified value for the specified time continuously.	• Open or short in MAF sensor circuit • MAF sensor • ECM

DTC CONFIRMATION PROCEDURE

1) With ignition switch turned OFF, connect scan tool.
2) Turn ON ignition switch and clear DTC using scan tool.
3) Start engine and run it for 10 sec.
4) Check DTC and pending DTC.

TROUBLESHOOTING

Step	Action	Yes	No
1	Was “Engine and Emission Control System Check” performed?	Go to Step 2.	Go to “Engine and Emission Control System Check” in this section.
2	MAF Sensor Check. 1) Connect scan tool to DLC with ignition switch turned OFF. 2) Start engine and check MAF value displayed on scan tool. (Refer to “Scan Tool Data” in this section for normal value.) Is normal value indicated?	Intermittent trouble. Check for intermittent referring to “Intermittent and Poor Connection” in Section 0A.	Go to Step 3.
3	Check MAF sensor power supply voltage. 1) Disconnect connector from MAF sensor with ignition switch turned OFF. 2) Turn ON ignition switch, measure voltage between engine ground and “BLK/RED” wire terminal of MAF sensor connector. Is voltage 10 – 14 V?	Go to Step 4.	“BLK/RED” wire in open circuit.
4	Check MAF sensor ground circuit. 1) Measure resistance between “ORN” wire terminal of MAF sensor connector and engine ground. Is resistance below 5 Ω?	Go to Step 6.	Go to Step 5.
5	Check ground circuit. 1) Disconnect connectors from ECM with ignition switch turned OFF. 2) Remove ECM from vehicle body and connect connectors to ECM. 3) Measure resistance between “C63-28” terminal of ECM connector and vehicle body ground. Is resistance below 5 Ω?	“ORN” wire in open or high resistance circuit.	ECM grounds “C63-1”, “C64-1” and/or “C64-2” circuit open or high resistance. If wires are OK, substitute a known-good ECM and recheck.

Step	Action	Yes	No
6	Check MAF sensor signal circuit. 1) Turn ON ignition switch. 2) Measure voltage between “PNK/BLK” wire terminal of MAF sensor connector and engine ground. Is voltage 0 V?	Go to Step 7.	“PNK/BLK” wire shorted to other circuit.
7	Check MAF sensor signal circuit. 1) Disconnect connectors from ECM with ignition switch turned OFF. 2) Measure resistance between “PNK/BLK” wire terminal of MAF sensor connector and vehicle body ground. Is resistance infinity?	Go to Step 8.	“PNK/BLK” wire shorted to ground circuit.
8	Check MAF sensor signal circuit. 1) Measure resistance between “PNK/BLK” wire terminal of MAF sensor connector and “C63-14” terminal of ECM connector. Is resistance below 3 Ω?	Go to Step 9.	“PNK/BLK” wire in open or high resistance circuit.
9	Check MAF sensor output signal. 1) Connect ECM connectors to MAF sensor and ECM with ignition switch turned OFF. 2) Check voltage between “C63-14” and “C63-28” under the following condition. **Voltage between “C63-14” and “C63-28” of ECM connector at ignition switch ON, leaving engine stop: 0.5 – 1.2 V** **Idling: 1.3 – 1.8 V** Is each value as specified?	Substitute a known-good ECM and recheck.	Faulty MAF and IAT sensor.

DTC P0103 Mass Air Flow Circuit High Input

WIRING DIAGRAM

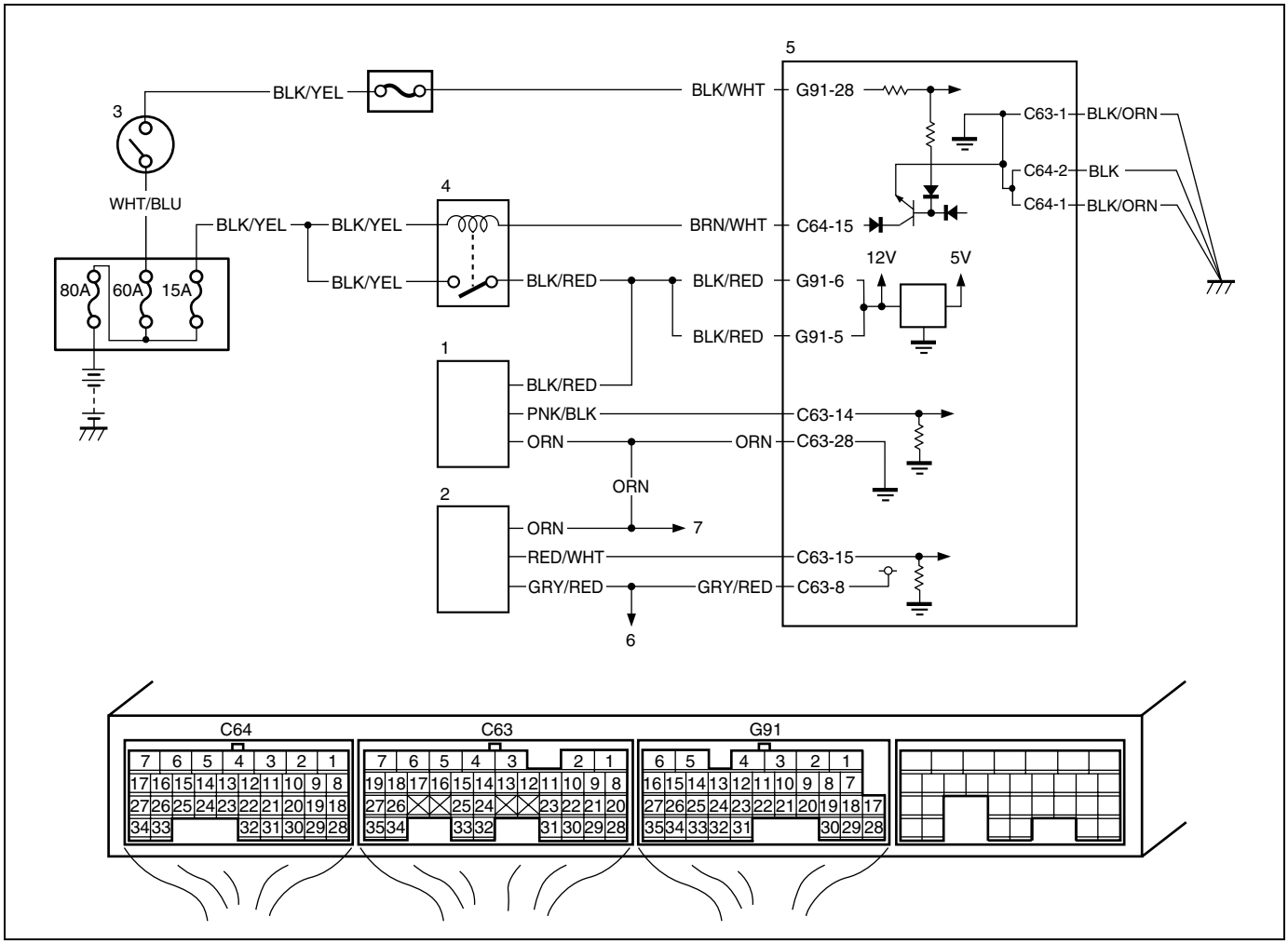

1. MAF and IAT sensor	4. Main relay	7. To other sensors
2. MAP sensor	5. ECM	
3. Ignition switch	6. To TP sensor	

DTC DETECTING CONDITION AND TROUBLE AREA

DTC DETECTING CONDITION	TROUBLE AREA
DTC will be set when all of the following conditions are detected for 5 seconds continuously. • Engine is running • After 3 seconds from ignition switch ON, and current of MAF sensor output is more than the specified value for the specified time continuously.	• Open or short in MAF sensor circuit • MAF sensor • ECM

DTC CONFIRMATION PROCEDURE

1) With ignition switch turned OFF, connect scan tool.
2) Turn ON ignition switch and clear DTC using scan tool.
3) Start engine and run it for 10 sec.
4) Check DTC and pending DTC.

TROUBLESHOOTING

Step	Action	Yes	No
1	Was “Engine and Emission Control System Check” performed?	Go to Step 2.	Go to “Engine and Emission Control System Check” in this section.
2	MAF sensor check. 1) Connect scan tool to DLC with ignition switch turned OFF. 2) Start engine and check MAF value displayed on scan tool. (Refer to “Scan Tool Data” in this section for normal value.) Is normal value indicated?	Intermittent trouble. Check for intermittent referring to “Intermittent and Poor Connection” in Section 0A.	Go to Step 3.
3	Check MAF sensor power supply voltage. 1) Disconnect connector from MAF sensor with ignition switch turned OFF. 2) Turn ON ignition switch, measure voltage between engine ground and “BLK/RED” wire terminal of MAF sensor connector. Is voltage 10 – 14 V?	Go to Step 4.	“BLK/RED” wire in open circuit.
4	Check MAF sensor ground circuit. 1) Measure resistance between “ORN” wire terminal of MAF sensor connector and engine ground. Is resistance below 5 Ω?	Go to Step 6.	Go to Step 5.
5	Check ground circuit. 1) Disconnect connectors from ECM with ignition switch turned OFF. 2) Remove ECM from vehicle body and connect connectors to ECM. 3) Measure resistance between “C63-28” terminal of ECM connector and vehicle body ground. Is resistance below 5 Ω?	“ORN” wire in open or high resistance circuit.	ECM grounds “C63-1”, “C64-1” and/or “C64-2” circuit in open or high resistance. If wires are OK, substitute a known-good ECM and recheck.
6	Check MAF sensor signal circuit. 1) Turn ON ignition switch. 2) Measure voltage between “PNK/BLK” wire terminal of MAF sensor connector and engine ground. Is voltage 0 V?	Go to Step 7.	“PNK/BLK” wire shorted to others circuit.
7	Check MAF sensor output signal 1) Connect connector to MAF sensor with ignition switch turned OFF. 2) Check voltage between “C63-14” and “C63-28” under the following condition. **Voltage between “C63-14” and “C63-28” of ECM connector at ignition switch ON, leaving engine OFF: 0.5 – 1.0 V** **Idling: 1.3 – 1.8 V** Is each value as specified?	Substitute a known-good ECM and recheck.	Faulty MAF and IAT sensor.

DTC P0112 Intake Air Temperature Sensor Circuit Low

WIRING DIAGRAM

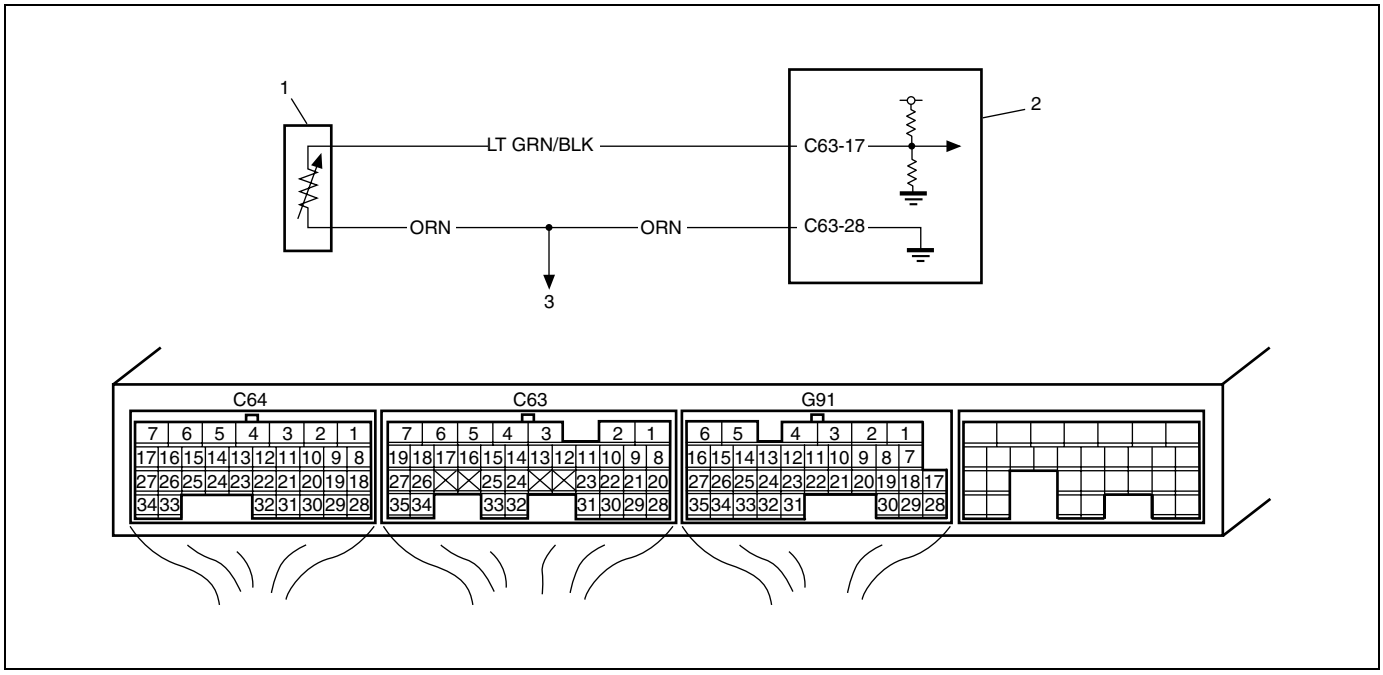

1. MAF and IAT sensor
2. ECM
3. To other sensor

DTC DETECTING CONDITION AND TROUBLE AREA

DTC DETECTING CONDITION	TROUBLE AREA
DTC will be set when all of the following conditions are detected for 5 seconds continuously. • Engine is running • Voltage of IAT sensor output is less than the specified value (High intake air temperature (low voltage/low resistance))	• IAT sensor circuit • IAT sensor • ECM

DTC CONFIRMATION PROCEDURE

1) With ignition switch turned OFF, connect scan tool.
2) Turn ON ignition switch and clear DTC using scan tool.
3) Start engine and run it for 10 sec.
4) Check DTC and pending DTC.

TROUBLESHOOTING

Step	Action	Yes	No
1	Was “Engine and Emission Control System Check” performed?	Go to Step 2.	Go to “Engine and Emission Control System Check” in this section.
2	IAT sensor and its circuit check. 1) Connect scan tool with ignition switch turned OFF. 2) Turn ON ignition switch. 3) Check intake air temp. displayed on scan tool. Is 165°C (329°F) indicated?	Go to Step 3.	Intermittent trouble. Check for intermittent referring to “Intermittent and Poor Connection” in Section 0A.
3	Check ECM voltage. 1) Disconnect connector from IAT sensor with ignition switch turned OFF. 2) Check for proper connection to IAT sensor at “LT GRN/BLK” and “ORN” wire terminals. 3) If OK, then turn ON ignition switch, check voltage between “LT GRN/BLK” wire terminal of IAT sensor connector and vehicle body ground. See Fig. 1. Is voltage about 4 – 6 V?	Go to Step 6.	Go to Step 4.
4	Check IAT circuit insulation. 1) Disconnect connectors from ECM with ignition switch turned OFF. 2) Measure resistance between “LT GRN/BLK” wire terminal of IAT sensor connector and body ground. Is resistance infinity?	Go to Step 5.	“LT GRN/BLK” wire shorted to ground circuit. If wire are OK, substitute a known-good ECM and recheck.
5	Check IAT short circuit. 1) Turn ON ignition switch. 2) Check voltage between “LT GRN/BLK” wire terminal of IAT sensor connector and vehicle body ground. Is voltage about 0 V?	Go to Step 6.	“LT GRN/BLK” wire shorted to other circuits. If wire are OK, substitute a known-good ECM and recheck.
6	Check IAT sensor according to “Mass air flow (MAF) and intake air temperature (IAT) sensor inspection” in Section 6E1. Is it in good condition?	Substitute a known-good ECM and recheck.	Replace MAF and IAT sensor.

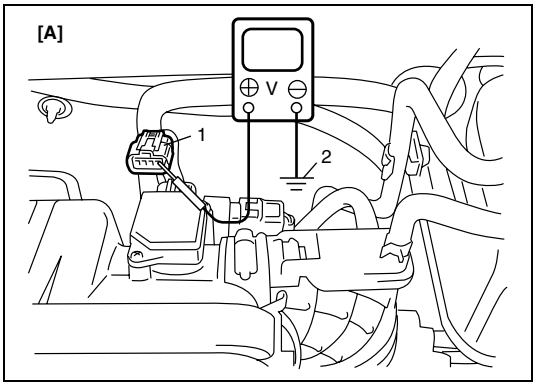

[A]: Fig.1 for Step 3
1. Disconnected MAF and IAT sensor connector
2. Engine ground

DTC P0113 Intake Air Temperature Sensor Circuit High

WIRING DIAGRAM

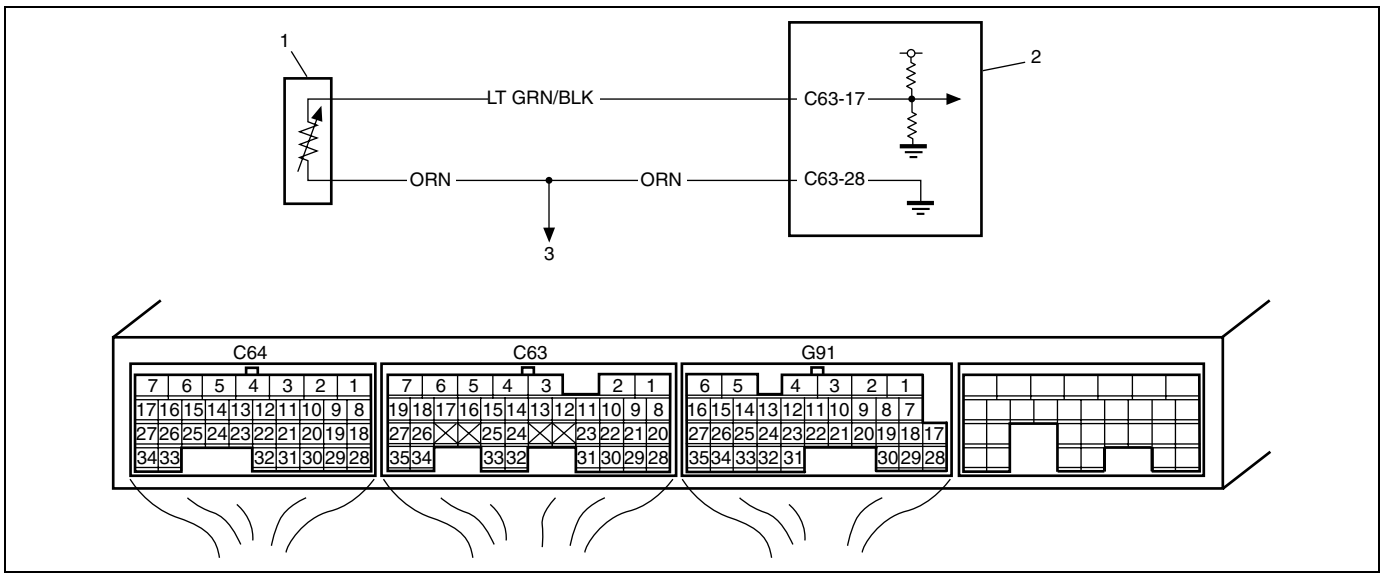

1.	MAF and IAT sensor
2.	ECM
3.	To other sensor

DTC DETECTING CONDITION AND TROUBLE AREA

DTC DETECTING CONDITION	TROUBLE AREA
DTC will be set when all of the following conditions are detected for 5 seconds continuously. • Engine is running • Voltage of IAT sensor output is more than the specified value (Low intake air temperature (high voltage/high resistance))	• IAT sensor circuit • IAT sensor • ECM

DTC CONFIRMATION PROCEDURE

1) With ignition switch turned OFF, connect scan tool.
2) Turn ON ignition switch and clear DTC using scan tool.
3) Start engine and run it for 10 sec.
4) Check DTC and pending DTC.

TROUBLESHOOTING

Step	Action	Yes	No
1	Was “Engine and Emission Control System Check” performed?	Go to Step 2.	Go to “Engine and Emission Control System Check” in this section.
2	IAT sensor and its circuit check. 1) Connect scan tool to DLC with ignition switch turned OFF. 2) Turn ON ignition switch. 3) Check intake air temp. displayed on scan tool. Is –40°C (–40°F) indicated?	Go to Step 3.	Intermittent trouble. Check for intermittent referring to “Intermittent and Poor Connection” in Section 0A.

Step	Action	Yes	No
3	Check IAT sensor voltage. 1) Disconnect connector from IAT sensor with ignition switch turned OFF. 2) Check for proper connection to IAT sensor at “LT GRN/BLK” and “ORN” wire terminals. 3) If OK, then turn ON ignition switch, check voltage between “LT GRN/BLK” wire terminal of IAT sensor connector and vehicle body ground. See Fig. 1. Is voltage about 4 – 6 V?	Go to Step 7.	Go to Step 4.
4	Check ECM voltage. 1) Disconnect connectors from ECM with ignition switch turned OFF. 2) Remove ECM from vehicle body and connect connectors to ECM. 3) Check for proper connection of ECM connector at “C63-17” terminal. 4) If OK, then turn ON ignition switch, check voltage between “C63-17” terminal of ECM connector and vehicle body ground. Is voltage about 4 – 6 V?	“LT GRN/BLK” wire open circuit. If wire and connection are OK, go to Step 5.	Go to Step 5.
5	Check wire circuit. 1) Disconnect connectors from ECM with ignition switch turned OFF. 2) Turn ON ignition switch. 3) Check voltage between “LT GRN/BLK” wire terminal of IAT sensor connector and vehicle body ground. Is voltage about 0 V?	Go to Step 6.	“LT GRN/BLK” wire shorted to other circuits. If wire are OK, substitute a known-good ECM and recheck.
6	Check wire circuit. 1) Measure resistance between “C63-17” terminal of ECM connector and “LT GRN/BLK” wire terminal of IAT sensor connector with ignition switch turned OFF. Is resistance below 5 Ω?	Go to Step 7.	“LT GRN/BLK” wire in high resistance circuit.
7	Check ground circuit. 1) Connect connectors to ECM. 2) Check for proper connection of IAT sensor connector at “ORN” wire terminal. 3) Measure resistance between “ORN” wire terminal of IAT sensor connector and body ground. Is resistance below 5 Ω?	Go to Step 9.	Go to Step 8.
8	Check ground circuit. 1) Measure resistance between “C63-28” terminal of ECM connector and body ground. Is resistance below 5 Ω?	“ORN” wire open circuit or high resistance circuit. Poor “C63-28” connection.	Faulty ECM ground circuit. If circuit are OK, substitute a known-good ECM and recheck.

Step	Action	Yes	No
9	Check IAT sensor according to “Mass air flow (MAF) and intake air temperature (IAT) sensor inspection” in Section 6E1. Is it in good condition?	Substitute a known-good ECM and recheck.	Replace MAF and IAT sensor.

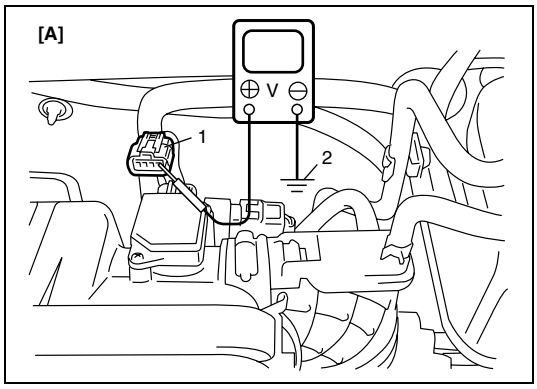

[A]: Fig. 1 for Step 3
1. Disconnected MAF and IAT sensor connector
2. Engine ground

DTC P0117 Engine Coolant Temperature Circuit Low

WIRING DIAGRAM

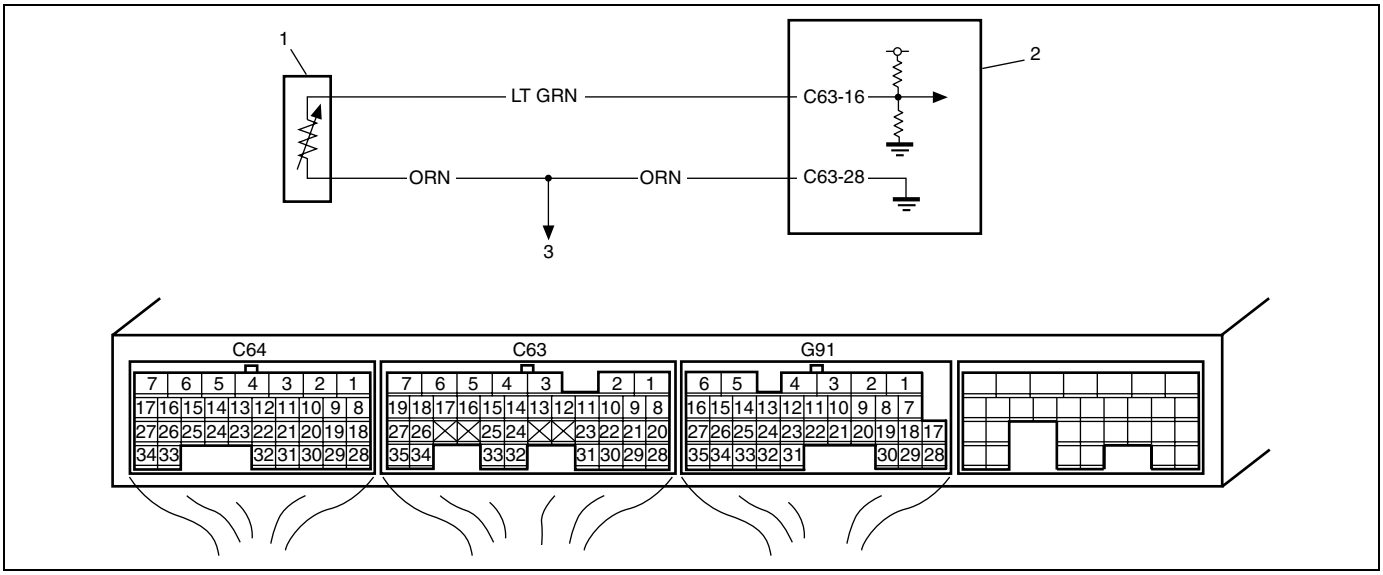

1. ECT sensor	2. ECM	3. To other sensors

DTC DETECTING CONDITION AND TROUBLE AREA

DTC DETECTING CONDITION	TROUBLE AREA
DTC will be set when all of the following conditions are detected for 5 seconds continuously. • Engine is running • Voltage of ECT sensor output is less than the specified value (High engine coolant temperature (low voltage/low resistance))	• ECT sensor circuit • ECT sensor • ECM

DTC CONFIRMATION PROCEDURE

1) With ignition switch turned OFF, connect scan tool.
2) Turn ON ignition switch and clear DTC using scan tool.
3) Start engine and run it for 10 sec. or more.
4) Check DTC and pending DTC.

TROUBLESHOOTING

Step	Action	Yes	No
1	Was “Engine and Emission Control System Check” performed?	Go to Step 2.	Go to “Engine and Emission Control System Check” in this section.
2	ECT sensor and its circuit check. 1) Connect scan tool with ignition switch turned OFF. 2) Turn ignition switch ON. 3) Check engine coolant temp. displayed on scan tool. Is 164°C (327°F) indicated?	Go to Step 3.	Intermittent trouble check for intermittent referring to “Intermittent and Poor Connection” in section 0A.

Step	Action	Yes	No
3	Check ECM voltage. 1) Disconnect connector from ECT sensor with ignition switch turned OFF. 2) Check for proper connection to ECT sensor at “LT GRN” and “ORN” wire terminals. 3) If OK, then turn ON ignition switch, check voltage between “LT GRN” wire terminal and vehicle body ground. See Fig. 1. Is voltage about 4 – 6 V?	Got to Step 6.	Go to Step 4.
4	Check ECT sensor circuit insulation. 1) Disconnect connectors from ECM with ignition switch turned OFF. 2) Measure resistance between “LT GRN” wire terminal of ECT sensor connector and body ground. Is resistance infinity?	Got to Step 5.	“LT GRN” wire shorted to ground circuit. If wire are OK, substitute a known-good ECM and recheck.
5	Check ECT sensor short circuit. 1) Turn ON ignition switch. 2) Check voltage between “LT GRN” wire terminal of ECT sensor connector and vehicle body ground. Is voltage about 0 V?	Got to Step 6.	“LT GRN” wire shorted to other circuits. If wire are OK, substitute a known-good ECM and recheck.
6	Check ECT sensor according to “Engine coolant temperature sensor (ECT sensor) inspection” in Section 6E1. Is it in good condition?	Substitute a known-good ECM and recheck.	Replace ECT sensor.

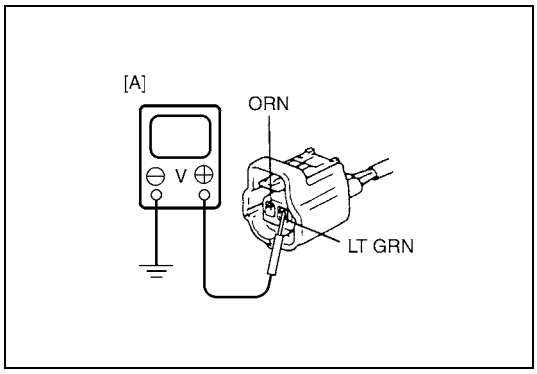

[A]: Fig. 1 for Step 3

DTC P0118 Engine Coolant Temperature Circuit High

WIRING DIAGRAM

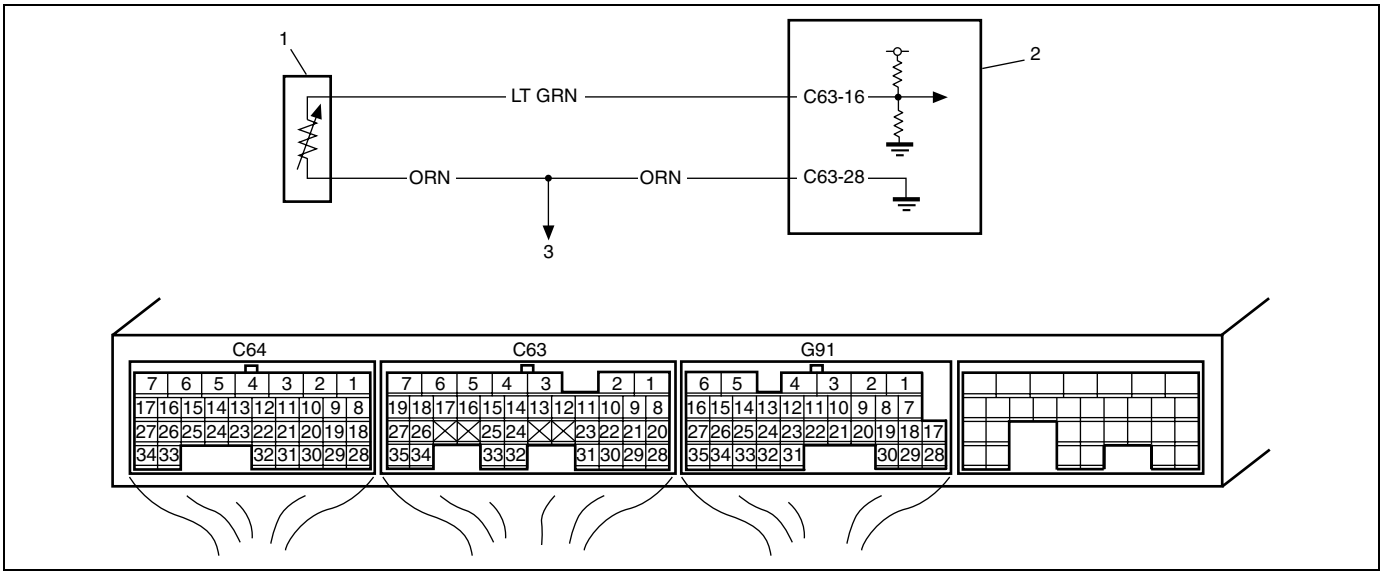

1.	ECT sensor
2.	ECM
3.	To other sensors

DTC DETECTING CONDITION AND TROUBLE AREA

DTC DETECTING CONDITION	TROUBLE AREA
DTC will be set when all of the following conditions are detected for 5 seconds continuously. • Engine is running • Voltage of ECT sensor output is more than the specified value (Low engine coolant temperature (high voltage/high resistance))	• ECT sensor circuit • ECT sensor • ECM

DTC CONFIRMATION PROCEDURE

1) With ignition switch turned OFF, connect scan tool.
2) Turn ON ignition switch and clear DTC using scan tool.
3) Start engine and run it for 10 sec. or more.
4) Check DTC and pending DTC.

TROUBLESHOOTING

Step	Action	Yes	No
1	Was “Engine and Emission Control System Check” performed?	Go to Step 2.	Go to “Engine and Emission Control System Check” in this section.
2	ECT sensor and its circuit check. 1) Connect scan tool with ignition switch turned OFF. 2) Turn ignition switch ON. 3) Check engine coolant temp. displayed on scan tool. Is –40°C (–40°F) indicated?	Go to Step 3.	Intermittent trouble. Check for intermittent referring to “Intermittent and Poor Connection” in Section 0A.
3	Check ECT voltage. 1) Disconnect connector from ECT sensor with ignition switch turned OFF. 2) Check for proper connection to ECT sensor at “LT GRN” and “ORN” wire terminals. 3) If OK, then turn ON ignition switch, check voltage between “LT GRN” wire terminal of ECT sensor connector and vehicle body ground. See Fig. 1. Is voltage about 4 – 6 V?	Go to Step 6.	Go to Step 4.
4	Check ECM voltage. 1) Disconnect connectors from ECM with ignition switch turned OFF. 2) Remove ECM from vehicle body and connect connectors to ECM. 3) Check for proper connection of ECM connector at “C63-16” terminals. 4) If OK, then turn ON ignition switch, check voltage between “C63-16” wire terminal of ECM connector and vehicle body ground. Is voltage about 4 – 6 V?	“LT GRN” wire open circuit. If wire and connection are OK, go to Step 5.	Go to Step 5.
5	Check ECT sensor harness voltage. 1) Disconnect connectors from ECM with ignition switch turned OFF. 2) Turn ON ignition switch. 3) Check voltage between “LT GRN” wire terminal of ECT sensor connector and vehicle body ground. Is voltage about 0 V?	Go to Step 6.	“LT GRN” wire shorted to other circuits. If wire are OK, substitute a known-good ECM and recheck.
6	Check ECT sensor harness resistance. 1) Measure resistance between “C63-16” terminal of ECM connector and “LT GRN” wire terminal of ECT sensor connector with ignition switch turn OFF. Is resistance below 5 Ω?	Go to Step 7.	“LT GRN” wire in high resistance circuit.

Step	Action	Yes	No
7	Check ECT sensor ground circuit. 1) Connect connectors to ECM. 2) Check for proper connection of ECT sensor connector at “ORN” wire terminal. 3) Measure resistance between “ORN” wire terminal of ECT sensor connector and vehicle body ground. Is resistance below 5 Ω?	Go to Step 9.	Go to Step 8.
8	Check ECT sensor ground circuit. 1) Measure resistance between “C63-28” terminal of ECM connector and vehicle body ground. Is resistance below 5 Ω?	“ORN” wire open circuit or high resistance circuit. Poor “C63-28” connection.	Faulty ECM ground circuit. If circuit are OK, substitute a known-good ECM and recheck.
9	Check ECT sensor according to “Engine coolant temperature sensor (ECT sensor) inspection” in Section 6E1. Is it in good condition?	Substitute a known-good ECM and recheck.	Replace ECT sensor.

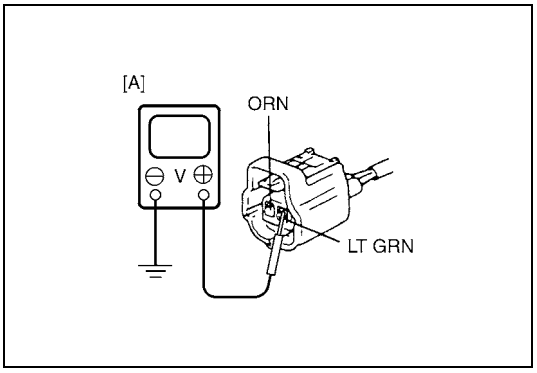

[A]: Fig. 1 for Step 3

DTC P0121 Throttle Position Sensor Circuit Range / Performance

WIRING DIAGRAM

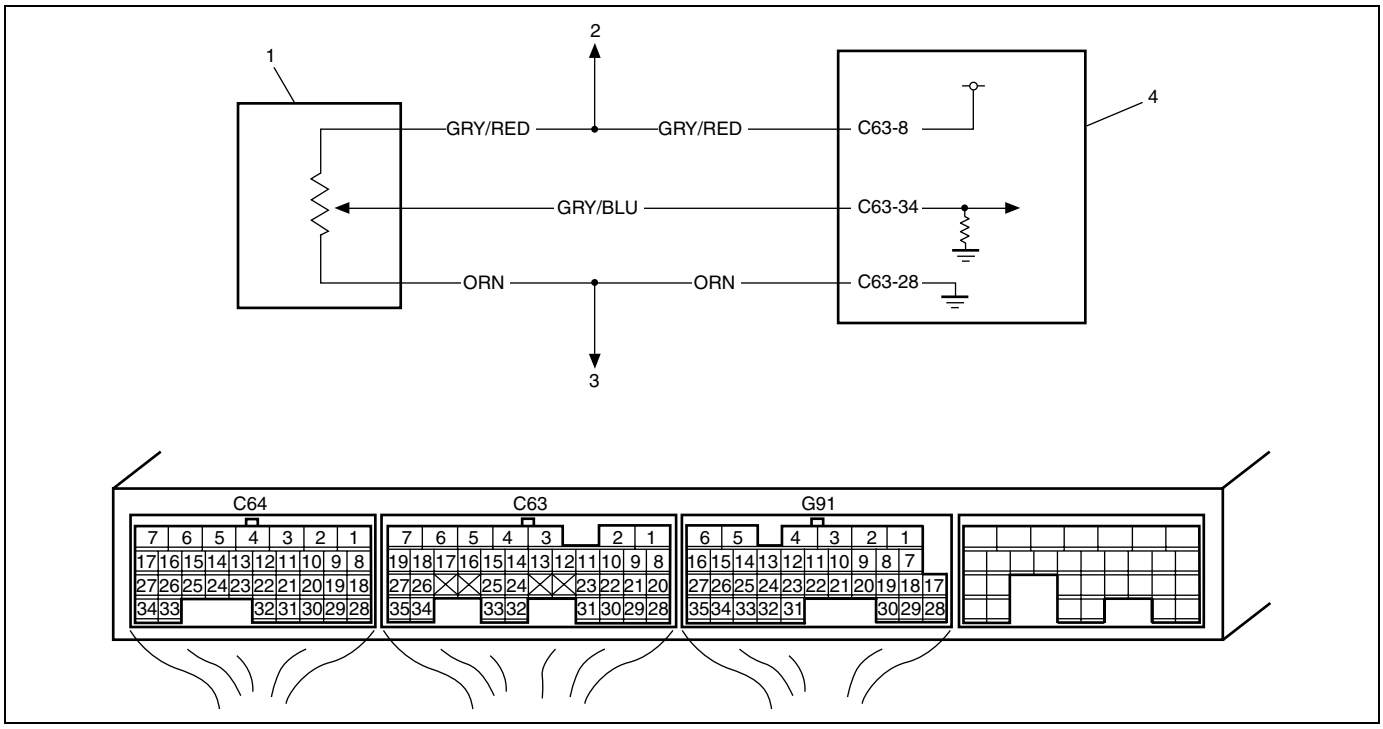

1. TP sensor	3. To other sensors
2. To MAP sensor	4. ECM

DTC DETECTING CONDITION AND TROUBLE AREA

DTC DETECTING CONDITION	TROUBLE AREA
Even if the voltage of the mass air flow sensor changes, the voltage of the throttle position sensor does not change normally. (2 driving cycle detection logic)	• Air intake system • TP sensor • TP sensor circuit • ECM • MAF sensor • Idle air control valve

DTC CONFIRMATION PROCEDURE

WARNING:

- **When performing a road test, select a place where there is no traffic or possibility of a traffic accident and very careful during testing to avoid occurrence of an accident.**
- **Road test should be carried out with 2 persons, a driver and a tester, on a level road.**

NOTE:

Check to make sure that the following conditions are satisfied when using this DTC CONFIRMATION PROCEDURE.

- **Intake air temp.: –7°C, 19.4°F or higher**
- **Engine coolant temp.: –7°C, 19.4°F or higher**
- **Altitude (barometric pressure): 2400 m, 8000 ft or less (560 mmHg, 75 kPa or more)**

1) With ignition switch turned OFF, connect scan tool.
2) Turn ON ignition switch and clear DTC using scan tool.
3) Start engine and warm up to normal operating temperature.
4) Drive vehicle at 60 km/h (38 mile/h) at 5th gear or D range.
5) Increase vehicle speed to 65 km/h (40 mile/h) at 5th gear or D range.
6) Release accelerator pedal to decrease vehicle speed till 60 km/h (38 mile/h).
7) Repeat Step 4) to 6) for 3 times.
8) Stop vehicle and check DTC and pending DTC.

TROUBLESHOOTING

Step	Action	Yes	No
1	Was “Engine and Emission Control System Check” performed?	Go to Step 2.	Go to “Engine and Emission Control System Check” in this section.
2	Check TP sensor and its circuit. 1) Turn OFF ignition switch and connect Suzuki Scan Tool to DLC. 2) Turn ON ignition switch and check TP sensor output voltage when throttle valve is at idle position and fully opened. See Fig. 1. Does voltage vary within specified value linearly as shown in figure?	Go to Step 11.	Go to Step 3.
3	Check TP sensor voltage. 1) Disconnect connector from TP sensor with ignition switch turned OFF. 2) Check for proper connection to TP sensor connector at “GRY/RED”, “GRY/BLU” and “ORN” wire terminals. 3) If OK, then with ignition switch turned ON, check voltage between “GRY/RED” wire terminal of TP sensor connector and body ground. Is voltage about 4 – 6 V?	Go to Step 7.	Go to Step 4.
4	Check ECM voltage. 1) Turn ignition switch to OFF position. 2) Check for proper connection of ECM connector at “C63-8” wire terminal. 3) If OK, disconnect connector from MAP sensor. 4) Turn ON ignition switch, check voltage between “C63-8” wire terminal of ECM connector and body ground. Is voltage about 4 – 6 V?	“GRY/RED” wire open or high resistance circuit. Faulty MAP sensor, check MAP sensor according to “MAP Sensor Individual Check” under “DTC P0108 Manifold Absolute Pressure High Input” in this section. If they are OK, go to Step 5.	Go to Step 5.

Step	Action	Yes	No
5	Check wire circuit. 1) Disconnect connectors from ECM with ignition switch turned OFF. 2) Measure resistance between “GRY/RED” wire terminal of ECM connector and body ground and between “GRY/BLU” wire terminal of ECM connector and body ground. Is resistance infinity?	Go to Step 6.	“GRY/RED” and/or “GRY/BLU” wire shorted to ground circuit. If wire are OK, substitute a known-good ECM and recheck.
6	Check wire circuit. 1) Turn ON ignition switch. 2) Check voltage between “GRY/RED” wire terminal of ECM connector and body ground and between “GRY/BLU” wire terminal of ECM connector and body ground. Is voltage about 0 V at each terminal?	Go to Step 7.	“GRY/RED” and/or “GRY/BLU” wire shorted to power circuit. If wire are OK, substitute a known-good ECM and recheck.
7	Check wire circuit. 1) Measure resistance between “C63-34” wire terminal of ECM connector and “GRY/BLU” wire terminal of TP sensor connector with ignition switch turned OFF. Is resistance below 5 Ω?	Go to Step 8.	“GRY/BLU” wire in high resistance circuit.
8	Check ground circuit. 1) Connect connectors to ECM. 2) Check for proper connection of MAP sensor connector at “ORN” wire terminal. 3) Measure resistance between “ORN” wire terminal of MAP sensor connector and body ground. Is resistance below 5 Ω?	Go to Step 10.	Go to Step 9.
9	Check ground circuit. 1) Measure resistance between “C63-28” wire terminal of ECM connector and body ground. Is resistance below 5 Ω?	“ORN” wire open circuit or high resistance circuit. Poor “C63-28” connection.	Faulty ECM ground circuit. If circuit are OK, substitute a known-good ECM and recheck.
10	Check TP sensor. 1) Turn OFF ignition switch. 2) Disconnect TP sensor connector. 3) Check for proper connection to TP sensor at each terminal. 4) If OK, then measure resistance between TP sensor terminals and check if each measured value is as specified. See Fig. 2. **TP sensor resistance** **Between 1 and 3: 4.0 – 6.0 kΩ** **Between 1 and 2: 0.1 – 6.5 kΩ, varying according to throttle valve opening.** Are measured values as specified?	Go to Step 11.	Replace TP sensor.

Step	Action	Yes	No
11	Check MAF sensor for performance. 1) Check MAF sensor performance, referring to “DTC P0101 Mass Air Flow Circuit Range/Performance” in this section. Is it in good condition?	Go to Step 12.	Repair or replace it.
12	Is DTC P0506 or P0507 detected?	Go to applicable DTC diag. flow table.	Go to Step 13.
13	Check idle air control (IAC) valve 1) Check idle air control valve referring to “Idle air control (IAC) valve operation check” in this section. Is it in good condition?	Go to Step 14.	Repair or replace idle air control valve.
14	Check throttle body. 1) Check throttle body for clog or leak. Is it OK?	Substitute a known-good ECM and recheck.	Repair throttle body.

[A]

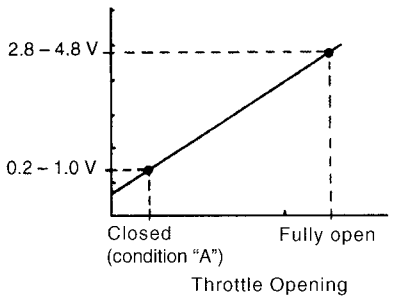

[B]

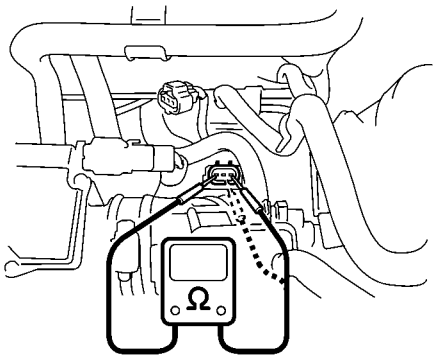

[A]: Fig. 1 for Step 2
[B]: Fig. 2 for Step 10

DTC P0122 Throttle Position Sensor Circuit Low

WIRING DIAGRAM

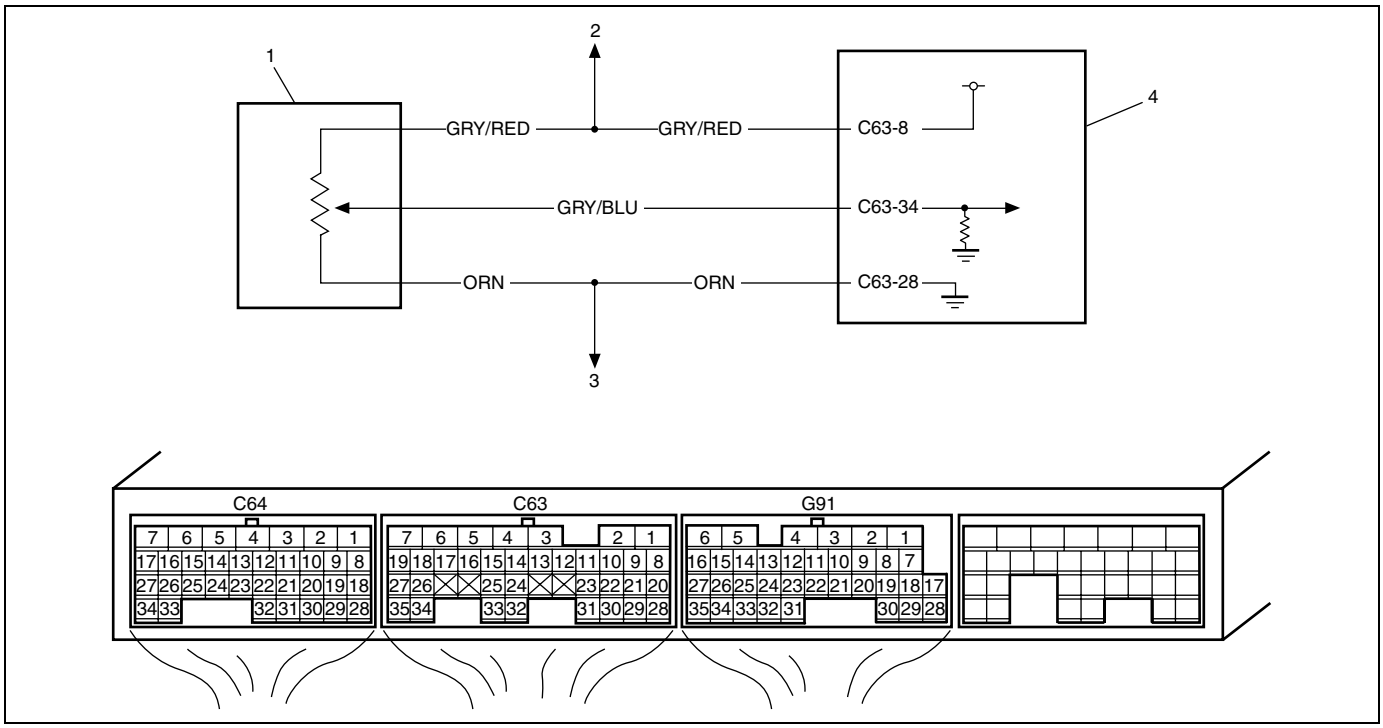

1. TP sensor	2. To MAP sensor	3. To other sensors	4. ECM

DTC DETECTING CONDITION AND TROUBLE AREA

DTC DETECTING CONDITION	TROUBLE AREA
DTC will be set when all of the following conditions are detected for 5 seconds continuously. • Engine is running • Voltage of TP sensor output is less than 0.15 V	• TP sensor circuit • TP sensor • ECM

DTC CONFIRMATION PROCEDURE

1) With ignition switch turned OFF, connect scan tool.
2) Turn ON ignition switch and clear DTC using scan tool.
3) Start engine and run it for 10 sec. or more.
4) Check DTC and pending DTC.

TROUBLESHOOTING

NOTE:

When this DTC and P1700 are stored together, also clear DTC stored in TCM after completion of repair.

Step	Action	Yes	No
1	Was “Engine and Emission Control System Check” performed?	Go to Step 2.	Go to “Engine and Emission Control System Check” in this section.

Step	Action	Yes	No
2	Check TP sensor and its circuit. 1) Connect scan tool to DLC with ignition switch turned OFF and then turn ON ignition switch. 2) Check throttle valve opening percentage displayed on scan tool. 3) Check throttle valve opening percentage displayed on scan tool while opening throttle valve from idle position to full open position. Is it displayed 0%?	Go to Step 3.	Intermittent trouble. Check for intermittent referring to “Intermittent and Poor Connection” in Section 0A.
3	Check wire harness. 1) Disconnect connector from TP sensor with ignition switch turned OFF. 2) Check for proper connection to TP sensor at “GRY/RED”, “GRY/BLU” and “ORN” wire terminals. 3) If OK, then with ignition switch turned ON, check voltage between “GRY/RED” wire terminal of TP sensor connector and body ground. See Fig. 1. Is voltage about 4 – 6 V at each terminal?	Go to Step 5.	Go to Step 4.
4	Check ECM voltage. 1) Check for proper connection of ECM connector at “C63-8” and “C63-34” wire terminals. 2) If OK, disconnect connector from MAP sensor. 3) Turn ON ignition switch, check voltage between “C63-8” wire terminal of ECM connector and body ground. Is voltage about 4 – 6 V at each terminal?	Check MAP sensor according to “MAP Sensor Individual Check” under “DTC P0108 Manifold Absolute Pressure High Input” in Section 6E1. If they are OK, go to Step 5.	Go to Step 5.
5	Check wire circuit. 1) Disconnect connectors from ECM with ignition switch turn OFF. 2) Check that there is insulation between “GRY/RED” wire terminal of TP sensor connector and body ground and between “GRY/BLU” wire terminal of TP sensor connector and body ground. Is there insulation?	Go to Step 6.	“GRY/RED” and/or “GRY/BLU” wire shorted to ground circuit. If wires are OK, substitute a known-good ECM and recheck.
6	Check TP sensor. 1) Check resistance between terminals of TP sensor. See Fig. 2. **TP sensor resistance** **Between 1 and 3: 4.0 – 6.0 kΩ** **Between 1 and 2: 0.1 – 6.5 kΩ** Are measured values within specifications?	Substitute a known-good ECM and recheck.	Replace TP sensor.

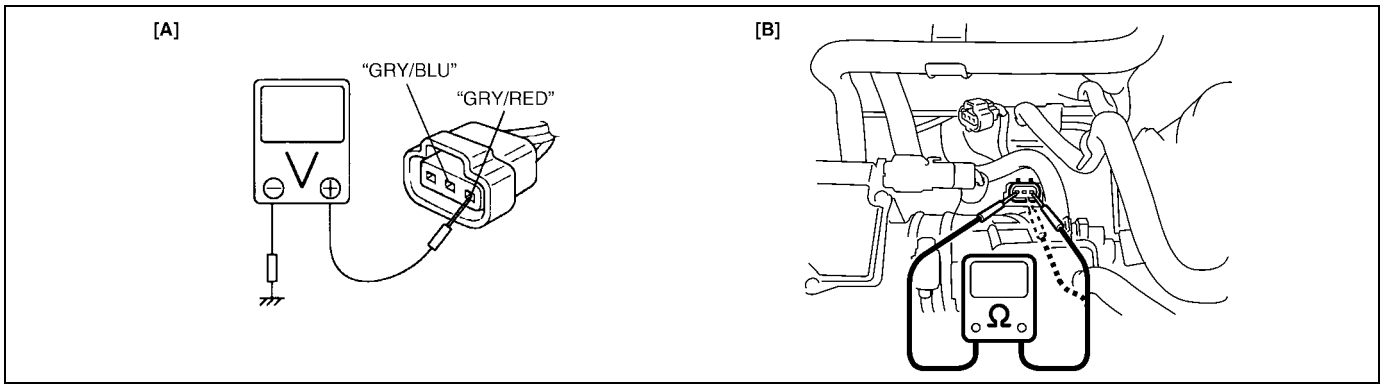

[A]: Fig. 1 for Step 3
[B]: Fig. 2 for Step 6

DTC P0123 Throttle Position Circuit High Input

WIRING DIAGRAM

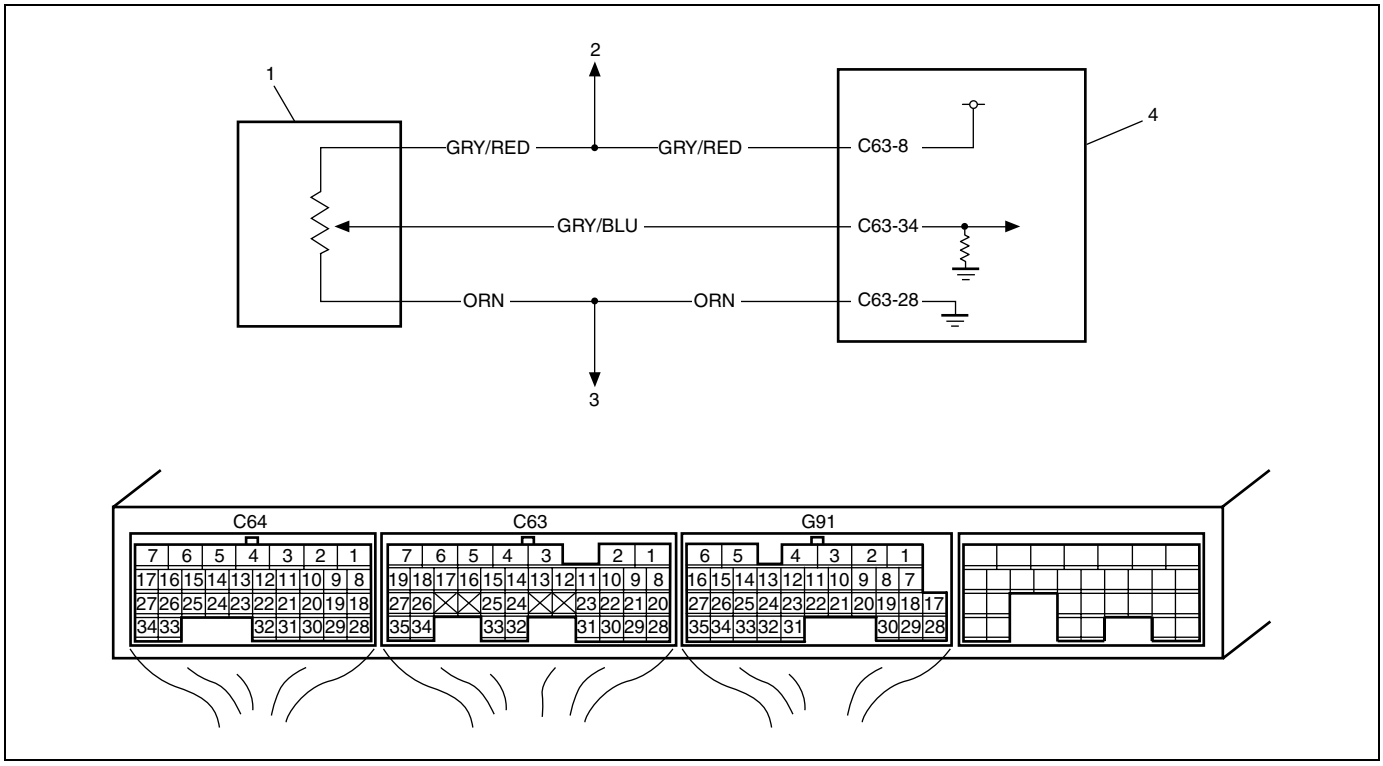

1. TP sensor	3. To other sensors
2. To MAP sensor	4. ECM

DTC DETECTING CONDITION AND TROUBLE AREA

DTC DETECTING CONDITION	TROUBLE AREA
DTC will be set when all of the following conditions are detected for 5 seconds continuously. • Engine is running • Voltage of TP sensor output is more than 4.7 V	• TP sensor circuit • TP sensor • ECM

DTC CONFIRMATION PROCEDURE

1) With ignition switch turned OFF, connect scan tool.
2) Turn ON ignition switch and clear DTC using scan tool.
3) Start engine and run it for 10 sec. or more.
4) Check DTC and pending DTC.

TROUBLESHOOTING

Step	Action	Yes	No
1	Was “Engine and Emission Control System Check” performed?	Go to Step 2.	Go to “Engine and Emission Control System Check” in this section.
2	Check TP sensor and its circuit. 1) Connect scan tool to DLC with ignition switch turned OFF and then turn ignition switch ON. 2) Check throttle valve opening percentage displayed on scan tool. 3) Check throttle valve opening percentage displayed on scan tool while opening throttle valve from idle position to full open position. Is it displayed 100%?	Go to Step 3.	Intermittent trouble. Check for intermittent referring to “Intermittent and Poor Connection” in Section 0A.
3	Check wire harness. 1) Disconnect connector from TP sensor with ignition switch turned OFF. 2) Check for proper connection to TP sensor at “GRY/RED”, “GRY/BLU” and “ORN” wire terminals. 3) If OK, then with ignition switch turned ON, check voltage between “GRY/RED” wire terminal of TP sensor connector and body ground. See Fig. 1. Is voltage about 4 – 6 V at each terminal?	Go to Step 6.	Go to Step 4.
4	Check ECM voltage. 1) Check for proper connection of connector at “C63-8” and “C63-34” wire terminals. 2) If OK, disconnect connector from MAP sensor. 3) Turn ON ignition switch, check voltage between “C63-8” wire terminal of ECM connector and body ground. Is voltage about 4 – 6 V at each terminal?	“GRY/RED” and/or “GRY/BLU” wire open circuit. Check MAP sensor according to “MAP Sensor Individual Check” under “DTC P0108 Manifold Absolute Pressure High Input” in this section. If they are OK, go to Step 5.	Go to Step 5.

Step	Action	Yes	No
5	Check wire circuit. 1) Disconnect connector from ECM with ignition switch turned OFF. 2) Turn ON ignition switch. 3) Check voltage between “GRY/RED” wire terminal of TP sensor connector and body ground and between “GRY/BLU” wire terminal of TP sensor connector and body ground. Is voltage about 0 V at each terminal?	Go to Step 7.	“GRY/RED” and/or “GRY/BLU” wire shorted to power circuit. If wire are OK, substitute a known-good ECM and recheck.
6	Check wire circuit. 1) Measure resistance between “C63-34” wire terminal of ECM connector and “GRY/BLU” wire terminal of TP sensor connector with ignition switch turned OFF. Is resistance below 5 Ω?	Go to Step 8.	“GRY/BLU” wire open circuit or high resistance circuit.
7	Check ground circuit. 1) Connect connector to ECM. 2) Check for proper connection of MAP sensor at “ORN” wire terminal. 3) Measure resistance between “ORN” wire terminal of MAP sensor connector and body ground. Is resistance below 5 Ω?	Go to Step 9.	Go to Step 8.
8	Check ground circuit. 1) Measure resistance between “C63-28” wire terminal of ECM connector and body ground. Is resistance below 5 Ω?	“ORN” wire open circuit or high resistance circuit. Poor “C63-28” connection.	Faulty ECM ground circuit. If circuit are OK, substitute a known-good ECM and recheck.
9	Check TP sensor. 1) Check resistance between terminals of TP sensor. See Fig. 2. **TP sensor resistance** **Between 1 and 3: 4.0 – 6.0 kΩ** **Between 1 and 2: 0.1 – 6.5 kΩ** Are measured values within specifications?	Substitute a known-good ECM and recheck.	Replace TP sensor.

[A]

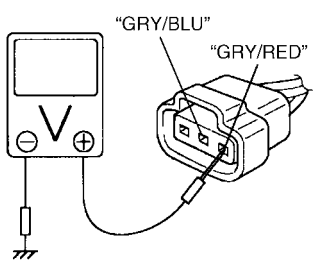

[B]

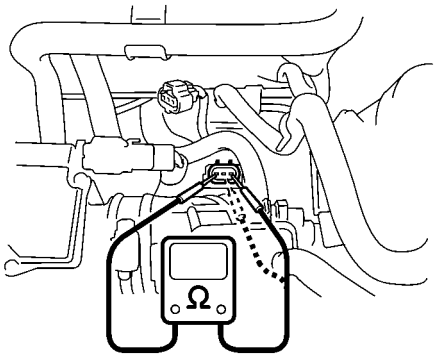

[A]: Fig. 1 for Step 3
[B]: Fig. 2 for Step 9

DTC P0131 O2 Sensor (HO2S) Circuit Low Voltage (Sensor-1)
DTC P0132 O2 Sensor (HO2S) Circuit High Voltage (Sensor-1)

WIRING DIAGRAM

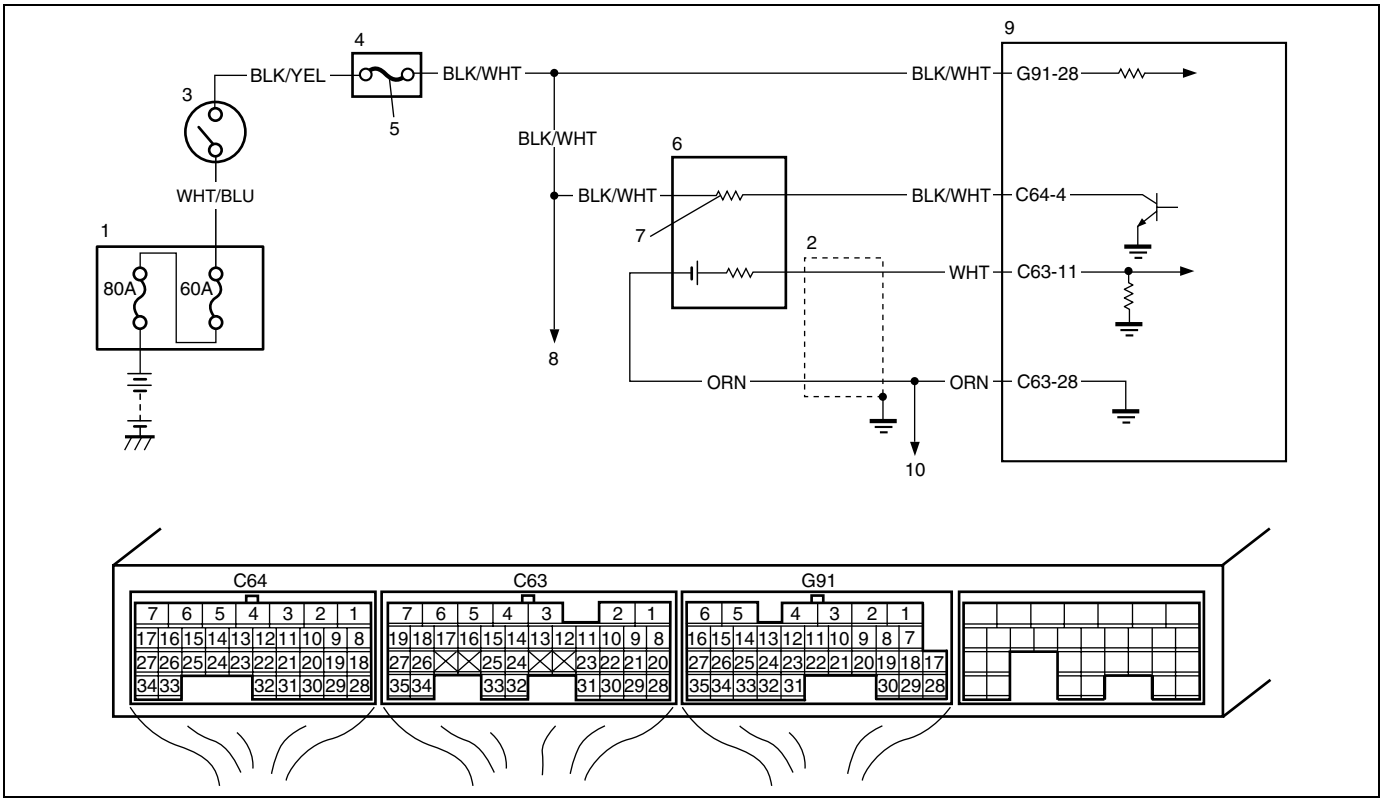

1. Relay/fuse box	4. Circuit fuse box	7. Heater	10. To other sensor
2. Shield wire	5. "IG" fuse	8. To HO2S–2 heater	
3. Ignition switch	6. HO2S–1	9. ECM	

DTC DETECTING CONDITION AND TROUBLE AREA

DTC DETECTING CONDITION	TROUBLE AREA
DTC P0131: • HO2S voltage is higher than 4.5 V even after engine running for specified time continuously from engine start • Maximum HO2S voltage is less than 0.6 V or minimum HO2S voltage is less than 0.3 V (2 driving cycle detection logic) DTC P0132: • HO2S voltage is less than 3.0 V even after engine running for specified time continuously from engine start • Maximum HO2S voltage is 0.74 V or more or minimum HO2S voltage is 0.34 V or more (2 driving cycle detection logic)	• HO2S–1 sensor circuit • HO2S–1 sensor • Fuel system • ECM • Fuel shortage

DTC CONFIRMATION PROCEDURE

WARNING:

- **When performing a road test, select a place where there is no traffic or possibility of a traffic accident and very careful during testing to avoid occurrence of an accident.**
- **Road test should be carried out with 2 person, a driver and tester, on a level road.**

NOTE:

Check to make sure that the following conditions are satisfied when using this DTC CONFIRMATION PROCEDURE.

- **Intake air temp.: –7°C, 19.4°F or higher**
- **Engine coolant temp.: –7°C, 19.4°F or higher**
- **Altitude (barometric pressure): 2400 m, 8000 ft or less (560 mmHg, 75 kPa or more)**

1) With ignition switch turned OFF, connect scan tool.
2) Turn ON ignition switch and clear DTC using scan tool.
3) Start engine and warm up to normal operating temperature.
4) Drive vehicle at 40 mph (60 km/h) or higher. (engine speed: 2500 – 3000 r/min.)
5) Keep above vehicle speed for 6 min. or more. (Throttle valve opening is kept constant in this step.)
6) Release accelerator pedal and with engine brake applied, keep vehicle coasting (with fuel cut for 3 sec. or more) and then stop vehicle.
7) Check DTC and pending DTC.

TROUBLESHOOTING

Step	Action	Yes	No
1	Was “Engine and Emission Control System Check” performed?	Go to Step 2.	Go to “Engine and Emission Control System Check” in this section.
2	Is there DTC(s) other than HO2S–1?	Go to applicable DTC diag. flow table.	Go to Step 3.
3	Check HO2S–1 signal. 1) Connect scan tool to DLC with ignition switch turned OFF. 2) Warm up engine to normal operating temperature and keep it at 2000 r/min. for 60 sec. 3) Repeat racing engine (Repeat depressing accelerator pedal 5 to 6 times continuously and take foot off from pedal to enrich and enlean A/F mixture). Does HO2S–1 output voltage deflect between below 0.3 V and over 0.74 V repeatedly?	Intermittent trouble. Check for intermittent referring to “Intermittent and Poor Connection” in Section 0A. If they are OK, go to Step 8.	Go to Step 4.
4	Check HO2S–1 sensor ground. 1) Disconnect connector from HO2S–1 sensor with ignition switch turned OFF. 2) Check for proper connection to HO2S–1 sensor connector at “WHT”, “ORN” and “BLK/WHT” wire terminals. 3) If wire and connection are OK, check there is continuity between “ORN” wire terminal of HO2S–1 sensor connector and engine ground. Is it continuity?	Go to Step 5.	“ORN” wire open circuit. Poor “C63-28” terminal connection. Faulty ECM ground. If they are OK, substitute a known-good ECM and recheck.

Step	Action	Yes	No
5	Check HO2S–1 sensor ground. 1) With ignition switch turned ON, check voltage between “ORN” wire terminal of HO2S–1 sensor connector and engine ground. Is voltage about 0.1 V or less?	Go to Step 6.	“ORN” wire high resistance circuit. Poor “C63-28” terminal connection. Faulty ECM ground. If they are OK, substitute a known-good ECM and recheck.
6	Check wire circuit. 1) Disconnect connectors from ECM with ignition switch turned OFF. 2) Remove ECM from vehicle body and connect connectors to ECM. 3) Measure resistance between “WHT” wire terminal of HO2S–1 connector and “C63-11” wire terminal of ECM connector. Is resistance less than 5 Ω?	Go to Step 7.	“WHT” wire high resistance circuit or open circuit. Poor “C63-11” terminal connection. Faulty ECM ground. If they are OK, substitute a known-good ECM and recheck.
7	Check wire circuit. 1) Disconnect connector from ECM with ignition switch turn OFF. 2) Measure resistance between “WHT” wire terminal of HO2S–1 sensor connector and body ground. Is resistance infinity?	Go to Step 8.	“WHT” wire shorted to ground circuit.
8	Check HO2S–1 signal circuit. 1) Measure voltage between “WHT” wire terminal of HO2S–1 connector and vehicle body ground. Is voltage 0 V?	Go to Step 9.	“WHT” wire shorted to others circuit.
9	Check HO2S–1 heater circuit. 1) Check HO2S–1 heater circuit, referring to “DTC P0031 HO2S Heater Control Circuit Low (Sensor-1) DTC P0032 HO2S Heater Control Circuit High (Sensor-1)”. Is circuit in good condition?	Go to Step 10.	Repair or replace it.
10	Check exhaust system. 1) Check exhaust system for exhaust gas leakage. Is it OK?	Go to Step 4 in DTC P0171 and P0172 diagnosis flow table. If it is in good condition, go to Step 11.	Repair exhaust system for leakage.
11	Check air intake system. 1) Check air intake system for clog or leak. Is it OK?	Check HO2S–1 sensor, referring to “Heated oxygen sensor (HO2S-1 and HO2S-2) heater on-vehicle inspection” in Section 6E1. If it in good condition, substitute a known-good ECM and recheck.	Repair or replace.

DTC P0133 O2 Sensor (HO2S) Circuit Slow Response (Sensor-1)

WIRING DIAGRAM

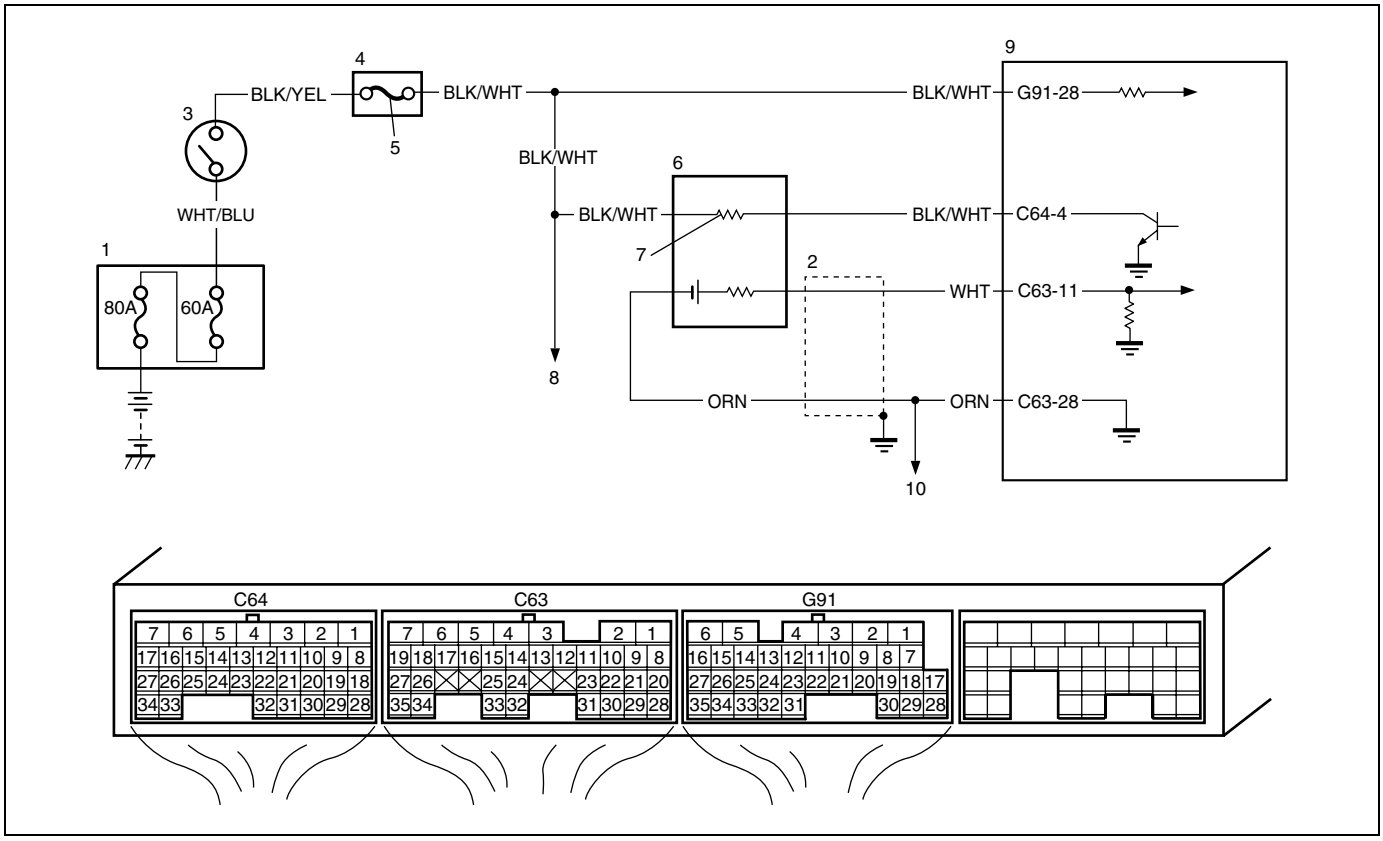

1. Relay/fuse box	4. Circuit fuse box	7. Heater	10. To other sensor
2. Shield wire	5. "IG" fuse	8. To HO2S–2 heater	
3. Ignition switch	6. HO2S–1	9. ECM	

DTC DETECTING CONDITION AND TROUBLE AREA

DTC DETECTING CONDITION	TROUBLE AREA
Response time (time to change from lean to rich or from rich to lean) of HO2S–1 output voltage is about 1 sec. at minimum or average time of 1 cycle is 5 sec. at minimum. (2 driving cycle detection logic)	• Heated oxygen sensor–1

DTC CONFIRMATION PROCEDURE

WARNING:

- **When performing a road test, select a place where there is no traffic or possibility of a traffic accident and very careful during testing to avoid occurrence of an accident.**
- **Road test should be carried out with 2 person, a driver and tester, on a level road.**

NOTE:

Check to make sure that the following conditions are satisfied when using this DTC CONFIRMATION PROCEDURE.

- **Intake air temp.: –7°C (19.4°F) or higher**
- **Engine coolant temp.: –7°C (19.4°F) or higher**
- **Altitude (barometric pressure): 2400 m, 8000 ft or less (560 mmHg, 75 kPa or more)**

1) Perform step 1) to 6) of DTC P0131/P0132 confirmation procedure.
2) Check if DTC and pending DTC exists by using scan tool. If not, check if oxygen sensor monitoring test has completed by using scan tool. If not in both of above checks (i.e., no DTC and pending DTC and oxygen sensor monitoring test not completed), check vehicle condition (environmental) and repeat step 3) through 6) of DTC P0131/P0132 confirmation procedure.

TROUBLESHOOTING

Step	Action	Yes	No
1	Was “Engine and Emission Control System Check” performed?	Go to Step 2.	Go to “Engine and Emission Control System Check” in this section.
2	Is there DTC(s) other than HO2S–1 (DTC P0133)?	Go to applicable DTC diag. flow table.	Replace HO2S–1.

DTC P0134 Heated Oxygen Sensor (HO2S) No Activity Detected (Sensor-1)

WIRING DIAGRAM

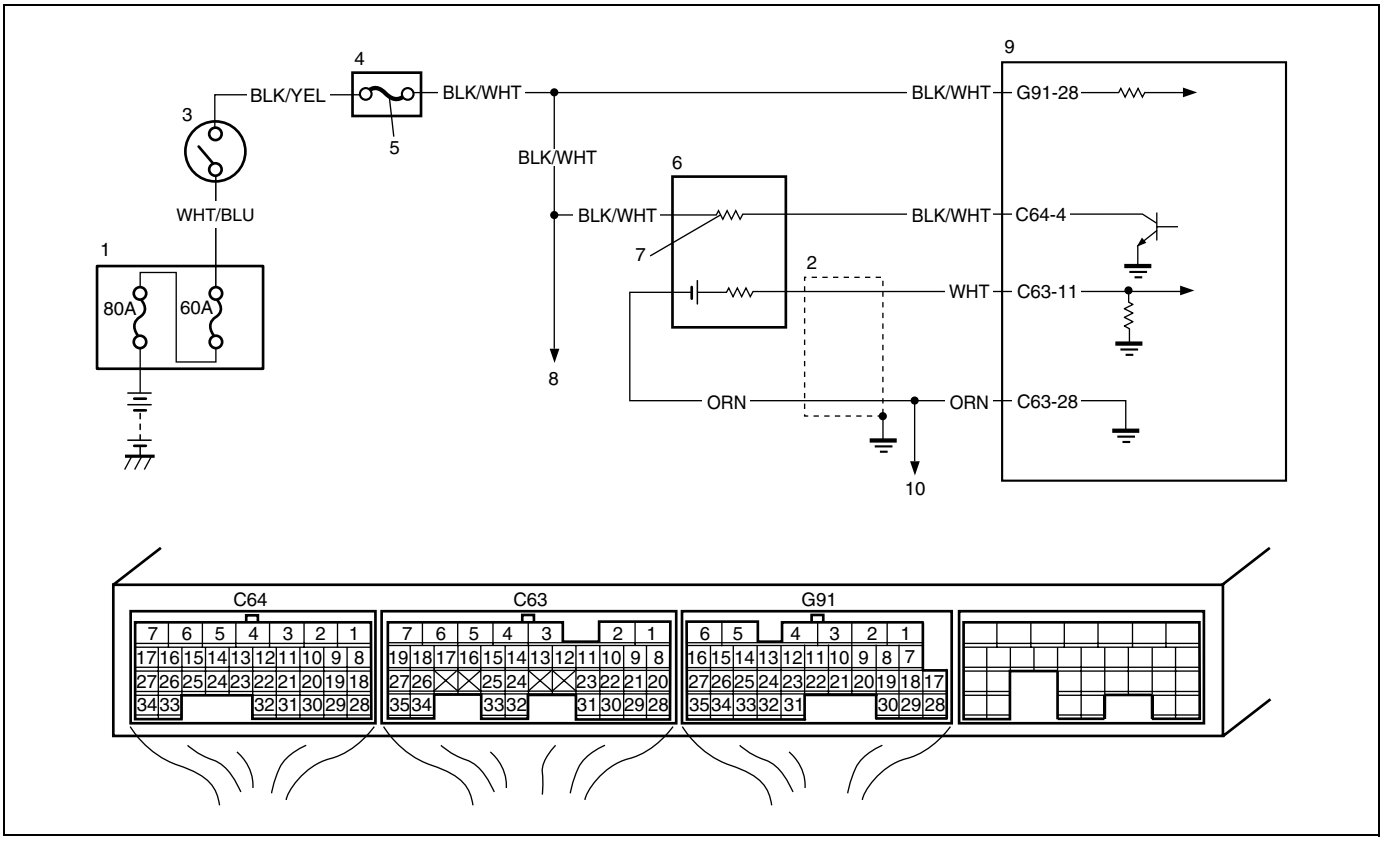

1. Relay/fuse box	4. Circuit fuse box	7. Heater	10. To other sensor
2. Shield wire	5. “IG” fuse	8. To HO2S–2 heater	
3. Ignition switch	6. HO2S–1	9. ECM	

DTC DETECTING CONDITION AND TROUBLE AREA

DTC DETECTING CONDITION	TROUBLE AREA
Maximum HO2S voltage is lower than 0.45 V. (2 driving cycle detection logic)	• HO2S–1 • HO2S–1 circuit • Fuel system • Exhaust gas leakage • ECM • Fuel shortage

DTC CONFIRMATION PROCEDURE

Refer to “DTC P0133 O2 Sensor (HO2S) Circuit Slow Response (Sensor-1)” in this section.

TROUBLESHOOTING

Step	Action	Yes	No
1	Was “Engine and Emission Control System Check” performed?	Go to Step 2.	Go to “Engine and Emission Control System Check” in this section.
2	HO2S–1 output voltage check. 1) Connect scan tool to DLC with ignition switch turned OFF. 2) Warm up engine to normal operating temperature and keep it at 2000 r/min. for 60 sec. 3) Repeat racing engine (Repeat depressing accelerator pedal 5 to 6 times continuously to enrich A/F mixture and take foot off from pedal to enlean) and check HO2S output voltage displayed on scan tool. Is over 0.74 V and below 0.3 V indicated?	Go to Step 4.	Go to Step 3.
3	Check HO2S–1 sensor ground. 1) Disconnect connector from HO2S–1 sensor with ignition switch turned OFF. 2) Check for proper connection to HO2S–1 sensor at “WHT”, “ORN” and “BLK/WHT” wire terminals. 3) If wire and connection are OK, check there is continuity between “ORN” wire terminal of HO2S–1 sensor connector and engine ground. Is it continuity?	Go to Step 4.	“ORN” wire open circuit. Poor “C63-28” terminal connection. Faulty ECM ground. If they are OK, substitute a known-good ECM and recheck.
4	Check HO2S–1 sensor ground. 1) With ignition switch turn ON, check voltage between “ORN” wire terminal of HO2S–1 sensor connector and engine ground. Is voltage about 0.1 V or less?	Go to Step 5.	“ORN” wire high resistance circuit. Poor “C63-28” terminal connection. Faulty ECM ground. If they are OK, substitute a known-good ECM and recheck.

Step	Action	Yes	No
5	Check wire circuit. 1) Disconnect connectors from ECM with ignition switch turned OFF. 2) Remove ECM from vehicle body and connect connectors to ECM. 3) Measure resistance between “WHT” wire terminal of HO2S–1 harness connector and “C63-11” terminal. Is resistance less than 5 Ω?	Go to Step 6.	“WHT” wire high resistance circuit or open circuit. Poor “C63-11” terminal connection. Faulty ECM ground. If they are OK, substitute a known-good ECM and recheck.
6	Check wire circuit. 1) Disconnect connectors from ECM with ignition switch turned OFF. 2) Measure resistance between “WHT” wire terminal of HO2S–1 sensor connector and body ground. Is resistance infinity?	Go to Step 7.	“WHT” wire shorted to ground circuit.
7	Check HO2S–1 heater circuit. 1) Check HO2S–1 heater circuit, referring to “DTC P0031 HO2S Heater Control Circuit Low (Sensor-1) DTC P0032 HO2S Heater Control Circuit High (Sensor-1)”. Is result in good condition?	Go to Step 8.	Repair or replace it.
8	Check exhaust system. 1) Check exhaust system for exhaust gas leakage. Is it OK?	Go to Step 4 in DTC P0171 and P0172 diagnosis flow table. If it is in good condition, go to Step 9.	Repair exhaust system for leakage.
9	Check air intake system. 1) Check air intake system for clog or leak. Is it OK?	Check HO2S–1 sensor, referring to “Heated oxygen sensor (HO2S-1 and HO2S-2) heater on-vehicle inspection” in Section 6E1. If it in good condition, substitute a known-good ECM and recheck.	Repair or replace.

DTC P0031 HO2S Heater Control Circuit Low (Sensor-1)
DTC P0032 HO2S Heater Control Circuit High (Sensor-1)

WIRING DIAGRAM

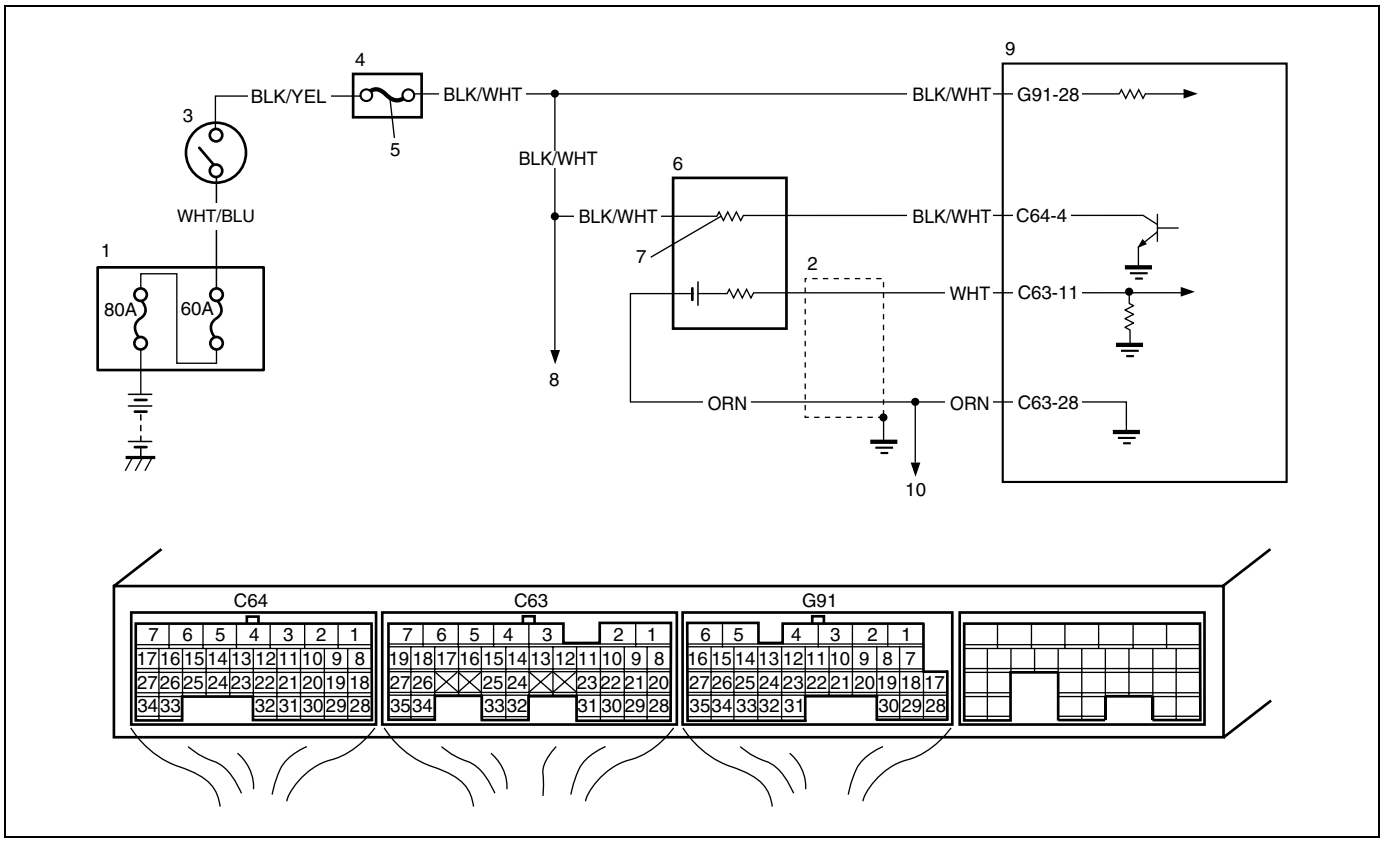

1. Relay/fuse box	4. Circuit fuse box	7. Heater	10. To other sensor
2. Shield wire	5. "IG" fuse	8. To HO2S–2 heater	
3. Ignition switch	6. HO2S–1	9. ECM	

DTC DETECTING CONDITION AND TROUBLE AREA

DTC DETECTING CONDITION	TROUBLE AREA
Current of HO2S–2 heater is more than specified value or lower than specified value for 3 seconds continuously (2 driving cycle detection logic)	• HO2S–1 heater • HO2S–1 heater circuit • ECM

DTC CONFIRMATION PROCEDURE

1) With ignition switch turned OFF, connect scan tool.
2) Turn ON ignition switch and clear DTC using scan tool.
3) Start engine and warm up to normal operating temperature.
4) Run engine at idle speed for 1 min. or more.
5) Check DTC and pending DTC.

TROUBLESHOOTING

Step	Action	Yes	No
1	Was “Engine and Emission Control System Check” performed?	Go to Step 2.	Go to “Engine and Emission Control System Check” in this section.
2	Check HO2S–1 heater power circuit. 1) Disconnect connector from HO2S–1 sensor with ignition switch turned OFF. 2) Check for proper connection to HO2S–1 sensor at “BLK/WHT” wire terminals. 3) If wire and connection are OK, measure voltage between “BLK/WHT” wire terminal and engine ground with ignition switch turned ON. Is voltage over 10 V?	Go to Step 3.	“BLK/WHT” wire open circuit or shorted to ground circuit.
3	Check HO2S–1 heater power circuit. 1) Disconnect connectors from ECM with ignition switch turned OFF. 2) Measure resistance between “BLK/WHT” wire terminal of HO2S–1 connector and “C64-4” terminal wire of ECM connector. Is resistance below 5 Ω?	Go to Step 4.	“BLK/WHT” wire high resistance circuit.
4	Check HO2S–1 heater drive circuit. 1) Measure resistance between “C64-4” wire terminal of ECM connector and vehicle body ground. Is resistance infinity?	Go to Step 5.	“BLK/WHT” wire shorted to ground circuit.
5	Check HO2S–1 heater drive circuit. 1) Turn ON ignition switch. 2) Measure voltage between “C64-4” wire terminal of ECM connector and vehicle body ground. Is voltage 0 V?	Go to Step 6.	“BLK/WHT” wire shorted to power circuit.
6	Check HO2S–1 heater drive circuit. 1) Connect connector to HO2S–1 with ignition switch turned OFF. 2) Turn ON ignition switch. 3) Measure voltage between “C64-4” wire terminal of ECM connector and vehicle body ground with disconnect connector from ECM. Is voltage over 10 V?	Go to Step 7.	“BLK/WHT” wire open circuit.
7	Check heater of sensor–1. 1) Disconnect HO2S–1 coupler with ignition switch turned OFF. 2) Check HO2S–1 heater resistance. See Fig. 1. It is 5.0 – 6.4 Ω at 20°C (68°F)?	Go to Step 8.	Replace HO2S–1.

Step	Action	Yes	No
8	Check HO2S–1 heater power circuit. 1) Disconnect connector from ECM with ignition switch turned OFF. 2) Connect connector to HO2S–1 with ignition switch turned OFF. 3) Measure resistance between “C64-4” wire and “G91-28” wire terminals of ECM connector. It resistance below 12 Ω?	HO2S–1 heater circuit are OK. Substitute a known-good ECM and recheck.	“BLK/WHT” wire high resistance circuit.

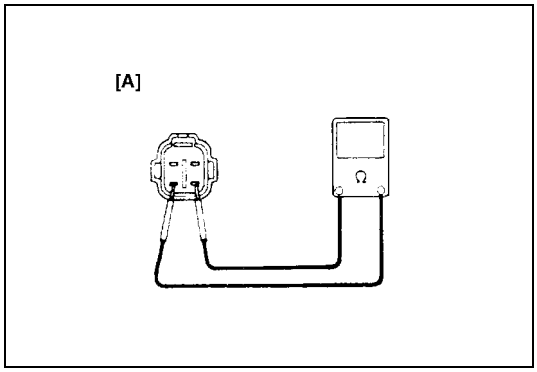

[A]: Fig. 1 for Step 7

DTC P0137 O2 Sensor (HO2S) Circuit Low Voltage (Sensor-2)
DTC P0138 O2 Sensor (HO2S) Circuit High Voltage (Sensor-2)

WIRING DIAGRAM

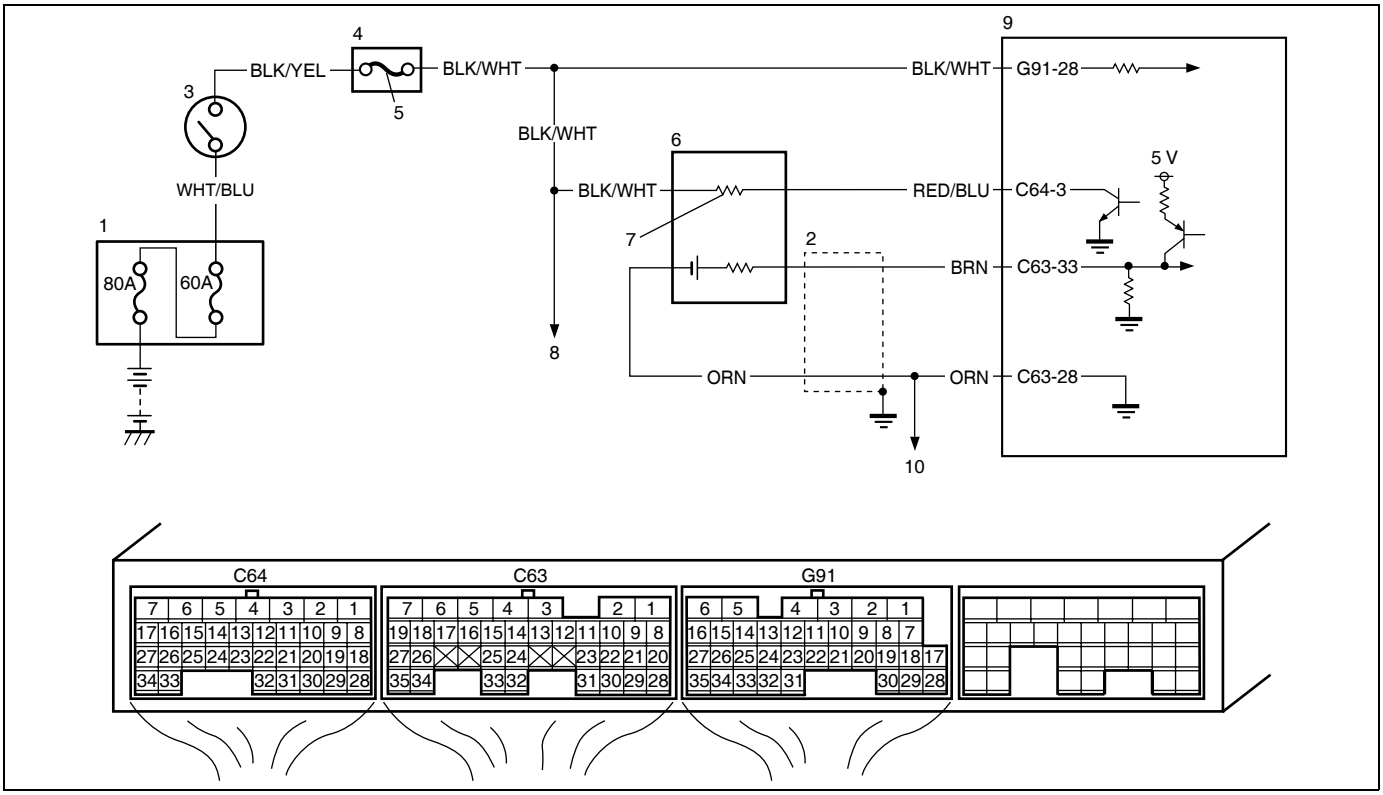

1. Relay/fuse box	4. Circuit fuse box	7. Heater	10. To other sensor
2. Shield wire	5. "IG" fuse	8. To HO2S–1 heater	
3. Ignition switch	6. HO2S–2	9. ECM	

DTC DETECTING CONDITION AND TROUBLE AREA

DTC DETECTING CONDITION	TROUBLE AREA
DTC P0137: The voltage of HO2S–2 sensor is more than 4.5 V with HO2S–2 heater ON. DTC P0138: When the minimum voltage of HO2S–2 sensor is more than 0.4 V or the average voltage of the sensor is more than 0.9 V, DTC P0138 is detected after the following driving sequence. 1) Drive the vehicle with the speed of 80 km/h (50 mile/h) at 5th gear or D range. 2) Release the accelerator pedal for more than 4 seconds. 3) Stop the vehicle at the idle state for 6 seconds. (2 driving cycle detection logic)	• HO2S–2 • HO2S–2 circuit • Fuel system • ECM • Fuel shortage

DTC CONFIRMATION PROCEDURE

WARNING:

- **When performing a road test, select a place where there is no traffic or possibility of a traffic accident and very careful during testing to avoid occurrence of an accident.**
- **Road test should be carried out with 2 person, a driver and tester, on a level road.**

NOTE:

Check to make sure that the following conditions are satisfied when using this DTC CONFIRMATION PROCEDURE.

- **Intake air temp.: –7°C, 19.4°F or higher**
- **Engine coolant temp.: –7°C, 19.4°F or higher**
- **Altitude (barometric pressure): 2400 m, 8000 ft or less (560 mmHg, 75 kPa or more)**

1) With ignition switch turned OFF, connect scan tool.
2) Turn ON ignition switch and clear DTC using scan tool.
3) Start engine and warm up to normal operating temperature.
4) Increase vehicle speed to 60 – 80 km/h (37 – 50 mile/h) at 5th gear or D range.
5) Release accelerator pedal and with engine brake applied, keep vehicle coasting (with fuel cut for 4 sec. or more), then stop vehicle and run engine at idle speed for 6 sec. or more.
6) Repeat Step 4).
7) Keep above vehicle speed for 8 min. or more. (Throttle valve opening is kept constant in this Step.)
8) Repeat Step 5).
9) Check DTC and pending DTC.

TROUBLESHOOTING

Step	Action	Yes	No
1	Was “Engine and Emission Control System Check” performed?	Go to Step 2.	Go to “Engine and Emission Control System Check” in this section.
2	Is there DTC(s) other than fuel system (DTC P0171/P0172) and HO2S–2 (DTC P0134)?	Go to applicable DTC diag. flow table.	Go to Step 3.
3	Check HO2S–2 and its circuit. 1) Connect scan tool to DLC with ignition switch turned OFF. 2) Warm up engine to normal operating temperature and keep it at 2000 r/min. for 60 sec. 3) Repeat racing engine (Repeat depressing accelerator pedal 5 to 6 times continuously and take foot off from pedal to enrich and enlean A/F mixture). Does HO2S–2 output voltage indicate deflect between over 0.35 V and below 0.25 V?	Go to DTC P0171 and P0172 diag. flow table (Fuel System Check).	Go to Step 4.
4	Check HO2S–2 sensor ground. 1) Disconnect connector from HO2S–2 sensor with ignition switch turned OFF. 2) Check for proper connection to HO2S–2 sensor connector at “BRN”, “ORN”, “RED/BLU” and “BLK/WHT” wire terminals. 3) If wire and connection are OK, check there is continuity between “ORN” wire terminal of HO2S–2 sensor connector and engine ground. Is it continuity?	Go to Step 5.	“ORN” wire open circuit. Poor “C63-28” terminal connection. Faulty ECM ground. If they are OK, substitute a known-good ECM and recheck.

Step	Action	Yes	No
5	Check HO2S–2 sensor ground. 1) With ignition switch turn ON, check voltage between “ORN” wire terminal of HO2S–2 sensor connector and engine ground. Is voltage about 0.1 V or less?	Go to Step 6.	“ORN” wire high resistance circuit. Poor “C63-28” terminal connection. Faulty ECM ground. If they are OK, substitute a known-good ECM and recheck.
6	Check wire circuit. 1) Disconnect connectors from ECM with ignition switch turned OFF. 2) Remove ECM from vehicle body and connect connectors to ECM. 3) Measure resistance between “BRN” wire terminal of HO2S–2 sensor connector and “C63-33” wire terminal of ECM connector. Is resistance less than 5 Ω?	Go to Step 7.	“WHT” wire high resistance circuit or open circuit. Poor “C63-33” terminal connection. Faulty ECM ground. If they are OK, substitute a known-good ECM and recheck.
7	Check wire circuit. 1) Disconnect connectors from ECM with ignition switch turned OFF. 2) Measure resistance between “BRN” wire terminal of HO2S–2 sensor connector and body ground. Is resistance infinity?	Go to Step 8.	“BRN” wire shorted to ground circuit.
8	Check HO2S–2 signal circuit. 1) Measure voltage between “BRN” wire terminal of HO2S–2 sensor connector and vehicle body ground. Is voltage 0 V?	Go to Step 9.	“BRN” wire shorted to others circuit.
9	Check HO2S–2 heater circuit. 1) Check HO2S–2 heater circuit, referring to “DTC P0037 HO2S Heater Control Circuit Low (Sensor-2) DTC P0038 HO2S Heater Control Circuit High (Sensor-2)”. Is circuit in good condition?	Go to Step 10.	Repair or replace it.
10	Check exhaust system. 1) Check exhaust system for exhaust gas leakage. Is it OK?	Go to Step 4 in DTC P0171 and P0172 diagnosis flow table. If it is in good condition, go to Step 11.	Repair exhaust system for leakage.
11	Check air intake system. 1) Check air intake system for clog or leak. Is it OK?	Check HO2S–2 sensor, referring to “Heated oxygen sensor (HO2S-1 and HO2S-2) heater on-vehicle inspection” in Section 6E1. If it is in good condition, substitute a known-good ECM and recheck.	Repair or replace.

DTC P0037 HO2S Heater Control Circuit Low (Sensor-2)
DTC P0038 HO2S Heater Control Circuit High (Sensor-2)

WIRING DIAGRAM

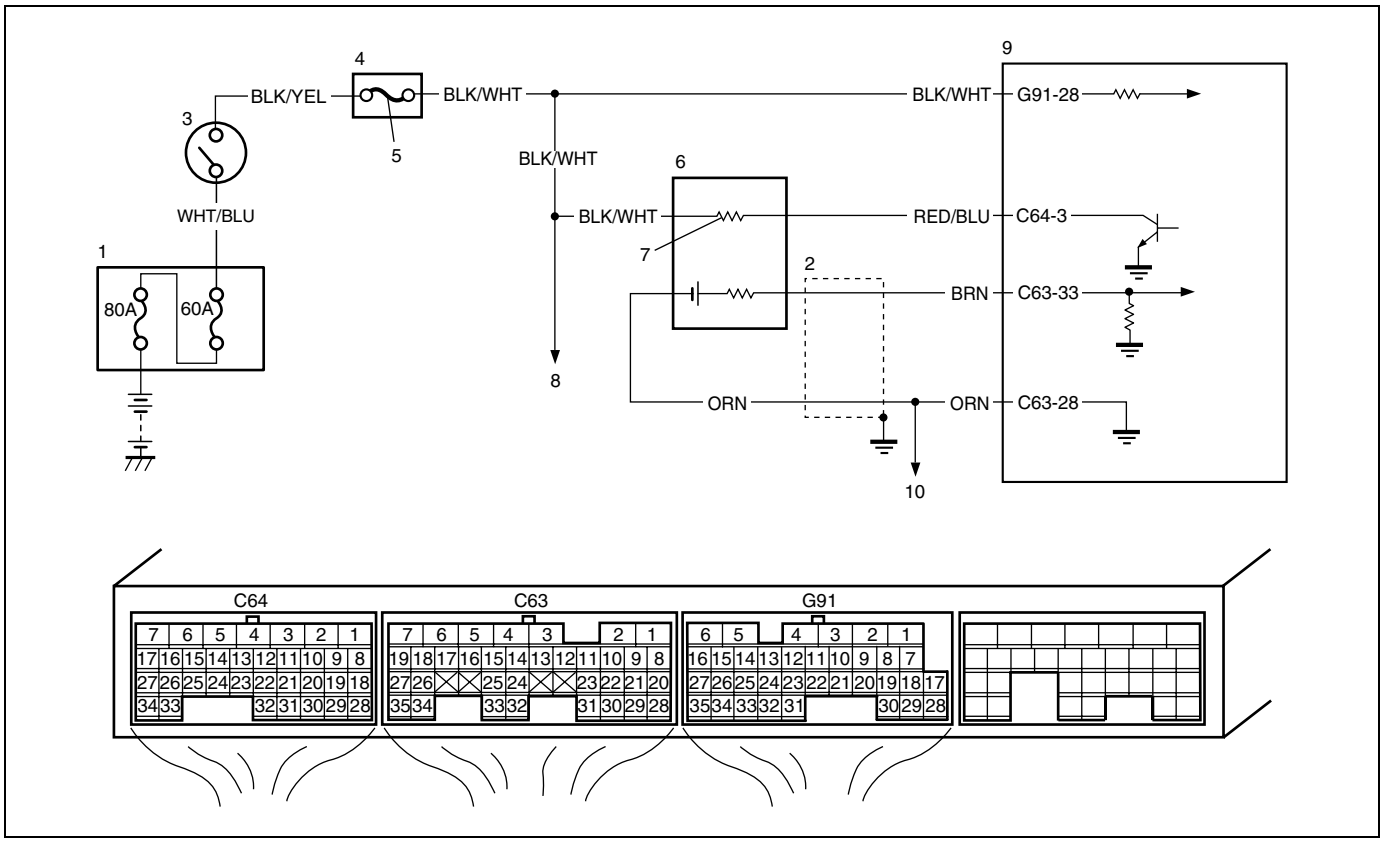

1. Relay/fuse box	4. Circuit fuse box	7. Heater	10. To other sensor
2. Shield wire	5. "IG" fuse	8. To HO2S–1 heater	
3. Ignition switch	6. HO2S–2	9. ECM	

DTC DETECTING CONDITION AND TROUBLE AREA

DTC DETECTING CONDITION	TROUBLE AREA
Current of HO2S–2 heater is more than specified value or less than specified value for 3 seconds continuously (2 driving cycle detection logic)	• HO2S–2 heater • HO2S–2 heater circuit • ECM

DTC CONFIRMATION PROCEDURE

WARNING:

- **When performing a road test, select a place where there is no traffic or possibility of a traffic accident and very careful during testing to avoid occurrence of an accident.**
- **Road test should be carried out with 2 person, a driver and tester, on a level road.**

1) With ignition switch turned OFF, connect scan tool.
2) Turn ON ignition switch and clear DTC using scan tool.
3) Start engine and warm up to normal operating temperature.
4) Run engine at idle speed for 1 min.
5) Check DTC and pending DTC.

TROUBLESHOOTING

Step	Action	Yes	No
1	Was “Engine and Emission Control System Check” performed?	Go to Step 2.	Go to “Engine and Emission Control System Check” in this section.
2	Check HO2S–2 heater power circuit. 1) Disconnect connector from HO2S–2 sensor with ignition switch turned OFF. 2) Check for proper connection to HO2S–2 sensor at “BLK/WHT” and “RED/BLU” wire terminals. 3) If wire and connection are OK, measure voltage between “BLK/WHT” wire terminal of HO2S–2 sensor connector and engine ground with ignition switch turned ON. Is voltage over 10 V?	Go to Step 3.	“BLK/WHT” wire open circuit or shorted to ground circuit.
3	Check HO2S–2 heater power circuit. 1) Disconnect connectors from ECM with ignition switch turned OFF. 2) Measure resistance between “BLK/WHT” wire terminal of HO2S–2 sensor connector and “G91-28” terminal wire of ECM connector. Is resistance below 5 Ω?	Go to Step 4.	“BLK/WHT” wire high resistance circuit.
4	Check HO2S–2 heater drive circuit. 1) Measure resistance between “RED/BLU” wire terminal of HO2S–2 sensor connector and vehicle body ground. Is resistance infinity?	Go to Step 5.	“RED/BLU” wire shorted to ground circuit.
5	Check HO2S–2 heater drive circuit. 1) Turn ON ignition switch. 2) Measure voltage between “RED/BLU” wire terminal of HO2S–2 sensor connector and vehicle body ground. Is voltage 0 V?	Go to Step 6.	“RED/BLU” wire shorted to power circuit.
6	Check HO2S–2 heater drive circuit. 1) Connect connector to HO2S–2 with ignition switch turned OFF. 2) Turn ON ignition switch. 3) Measure voltage between “C64-3” wire terminal of disconnected ECM connector and vehicle body ground. Is voltage over 10 V?	Go to Step 7.	“RED/BLU” wire open circuit.
7	Check heater of sensor–2. 1) Disconnect HO2S–2 coupler with ignition switch turned OFF. 2) If OK, then check heater resistance. Is it 11.7 – 14.3 Ω at 20°C, 68°F?	Go to Step 8.	Replace HO2S–2.

Step	Action	Yes	No
8	Check HO2S–2 heater power circuit. 1) Disconnect connectors from ECM with ignition switch turned OFF. 2) Connect connector to HO2S–2 with ignition switch turned OFF. 3) Measure resistance between “C64-3” and “G91-28” wire terminals of ECM connector. Is resistance below 30 Ω?	HO2S–2 heater circuit are OK. Substitute a known-good ECM and recheck.	“RED/BLU” wire high resistance circuit.

DTC P0171 System Too Lean
DTC P0172 System Too Rich

DTC DETECTING CONDITION AND TROUBLE AREA

DTC DETECTING CONDITION	TROUBLE AREA
P0171: Total fuel trim is higher than 43%. P0172: Total fuel trim is lower than –30%. (2 driving cycle detection logic)	• Vacuum leaks • Exhaust gas leakage • Fuel pressure out of specification • Fuel injector malfunction • Heated oxygen sensor–1 malfunction • MAF sensor malfunction • ECT sensor malfunction

DTC CONFIRMATION PROCEDURE

WARNING:
- **When performing a road test, select a place where there is no traffic or possibility of a traffic accident and very careful during testing to avoid occurrence of an accident.**
- **Road test should be carried out with 2 person, a driver and tester, on a level road.**

NOTE:

Check to make sure that the following conditions are satisfied when using this DTC CONFIRMATION PROCEDURE.
- **Intake air temp.: –7°C (19.4°F) or higher**
- **Engine coolant temp.: –7°C (19.4°F) or higher**
- **Altitude (barometric pressure): 2400 m, 8000 ft or less (560 mmHg, 75 kPa or more)**

1) With ignition switch turned OFF, connect scan tool.
2) Turn ON ignition switch and clear DTC using scan tool.
3) Start engine and warm up to normal operating temperature.
4) Operate vehicle within freeze frame data condition as noted for 5 min.
5) Stop vehicle and check DTC and pending DTC.

TROUBLESHOOTING

Step	Action	Yes	No
1	Was “Engine and Emission Control System Check” performed?	Go to Step 2.	Go to “Engine and Emission Control System Check” in this section.
2	Is there DTC(s) other than “P0171” and “P0172”?	Go to applicable DTC flow table.	Go to Step 3.
3	Check intake system and exhaust system for leakage. Are intake system and exhaust system in good condition?	Go to Step 4.	Repair or replace.
4	Check fuel pressure referring to “Table B-3 Fuel Pressure Check” in this section. Is check result satisfactory?	Go to Step 5.	Repair or replace.
5	Check fuel injectors referring to “Fuel injector inspection” in Section 6E1. Is check result satisfactory?	Go to Step 6.	Faulty injector(s) or its circuit.
6	Check fuel level sensor. Is DTC P0463 displayed?	Go to Step 7.	Faulty fuel level sensor or its circuit.
7	Check MAF sensor referring to Step 2 and 3 of “DTC P0101 Mass Air Flow Circuit Range/Performance”. Is check result satisfactory?	Go to Step 8.	Faulty MAF sensor or its circuit.
8	Check ECT sensor referring to Step 3 and 4 of “DTC P0118 Engine Coolant Temperature Circuit High”. Is check result satisfactory?	Go to Step 9.	Faulty ECT sensor or its circuit.
9	Check HO2S–1 referring to Step 2 of “DTC P0131 O2 Sensor (HO2S) Circuit Low Voltage (Sensor-1)”. Is check result satisfactory?	Substitute a known-good ECM and recheck.	Faulty HO2S–1 or its circuit.

DTC P0300 Random Misfire Detected
DTC P0301 Cylinder 1 Misfire Detected
DTC P0302 Cylinder 2 Misfire Detected
DTC P0303 Cylinder 3 Misfire Detected
DTC P0304 Cylinder 4 Misfire Detected

SYSTEM DESCRIPTION

ECM measure the angle of the crankshaft based on the pulse signal from the CKP sensor and CMP sensor for each cylinder. If it detects a large change in the angle speed of the crankshaft, it concludes occurrence of a misfire. When the number of misfire is counted by ECM beyond the DTC detecting condition, it determine the cylinder where the misfire occurred and output it as DTC.

DTC DETECTING CONDITION AND TROUBLE AREA

DTC DETECTING CONDITION	TROUBLE AREA
P0300 • Misfire, which causes catalyst to overheat during 200 engine revolutions, is detected at 2 or more cylinders. (MIL flashes as long as this misfire occurs continuously.) or • Misfire, which affects exhaust emission adversely during 1000 engine revolution, is detected at 2 or more cylinders. (2 driving cycle detection logic)	• Ignition system • Fuel injector and its circuit • Fuel pressure • EGR system • Fuel level sensor • Abnormal air drawn in • Engine compression • Valve lash adjuster • Valve timing • Fuel shortage
P0301, P0302, P0303, P0304 • Misfire, which causes catalyst to overheat during 200 engine revolutions, is detected at 1 cylinder. (MIL flashes as long as this misfire occurs continuously.) or • Misfire, which affects exhaust emission adversely during 1000 engine revolution, is detected at 1 cylinder. (2 driving cycle detection logic)	

DTC CONFIRMATION PROCEDURE

WARNING:

- **When performing a road test, select a place where there is no traffic or possibility of a traffic accident and very careful during testing to avoid occurrence of an accident.**
- **Road test should be carried out with 2 person, a driver and tester, on a level road.**

NOTE:

Check to make sure that the following conditions are satisfied when using this DTC CONFIRMATION PROCEDURE.

- **Intake air temp.: –7°C, 19.4°F or higher**
- **Engine coolant temp.: –7°C (19.4°F) or higher**
- **Altitude (barometric pressure): 2400 m, 8000 ft or less (560 mmHg, 75 kPa or more)**

1) With ignition switch turned OFF, connect scan tool.
2) Turn ON ignition switch and clear DTC using scan tool.
3) Drive vehicle under freeze frame data condition as noted for 1 min. or more.
4) Stop vehicle and check DTC and pending DTC.

TROUBLESHOOTING

Step	Action	Yes	No
1	Was “Engine and Emission Control System Check” performed?	Go to Step 2.	Go to “Engine and Emission Control System Check” in this section.
2	Does fuel level meter indicate “E” level (empty)?	Add fuel and recheck.	Go to Step 3.
3	Ignition system inspection. 1) Check spark plug and ignition spark of cylinder where misfire occurs, referring to “Spark Plugs Inspection” and “Ignition Spark Test” in Section 6F1. Is it in good condition?	Go to Step 4.	Faulty ignition coil, wire harness, spark plug or other system parts.
4	Fuel injector circuit check. 1) Using sound scope, check each injector operating sound at engine cranking or idling. Do all injectors make operating sound?	Go to Step 5.	Check coupler connection and wire harness of injector not making operating sound and injector itself. If OK, substitute a known-good ECM and recheck.
5	Fuel pressure inspection. 1) Check fuel pressure referring to “Table B-3 Fuel Pressure Check” in this section. Is check result satisfactory?	Go to Step 6.	Repair or replace.
6	Fuel injector inspection. 1) Check fuel injector(s) referring to “Fuel injector inspection” in Section 6E1. Is check result satisfactory?	Go to Step 7.	Replace.
7	Ignition timing inspection. 1) Check ignition timing referring to “Ignition Timing Inspection” in Section 6F1. Is check result satisfactory?	Go to Step 8.	Check related sensors.
8	EGR system inspection. 1) Check EGR system referring to “EGR valve inspection” in Section 6E1. Is check result satisfactory?	Go to Step 9.	Repair or replace.
9	Fuel level sensor inspection. 1) Check fuel level sensor referring to Step 2 of “DTC P0462 Fuel Level Sensor Circuit Low”. Is check result satisfactory?	Go to Step 10.	Repair or replace.

Step	Action	Yes	No
10	Engine mechanical systems check. Check engine mechanical parts or system which can cause engine rough idle or poor performance. – Engine compression (Refer to “Compression Check” in Section 6A1.) – Valve lash adjustor (Refer to “Valve Lash (Clearance) Inspection” in Section 6A1.) – Valve timing (Refer to “Timing Chain and Chain Tensioner Removal and Installation” in Section 6A1.) Are they in good condition?	Check wire harness and connection of ECM ground, ignition system and fuel injector for intermittent open and short.	Repair or replace.

DTC P0327 Knock Sensor Circuit Low
DTC P0328 Knock Sensor Circuit High

WIRING DIAGRAM

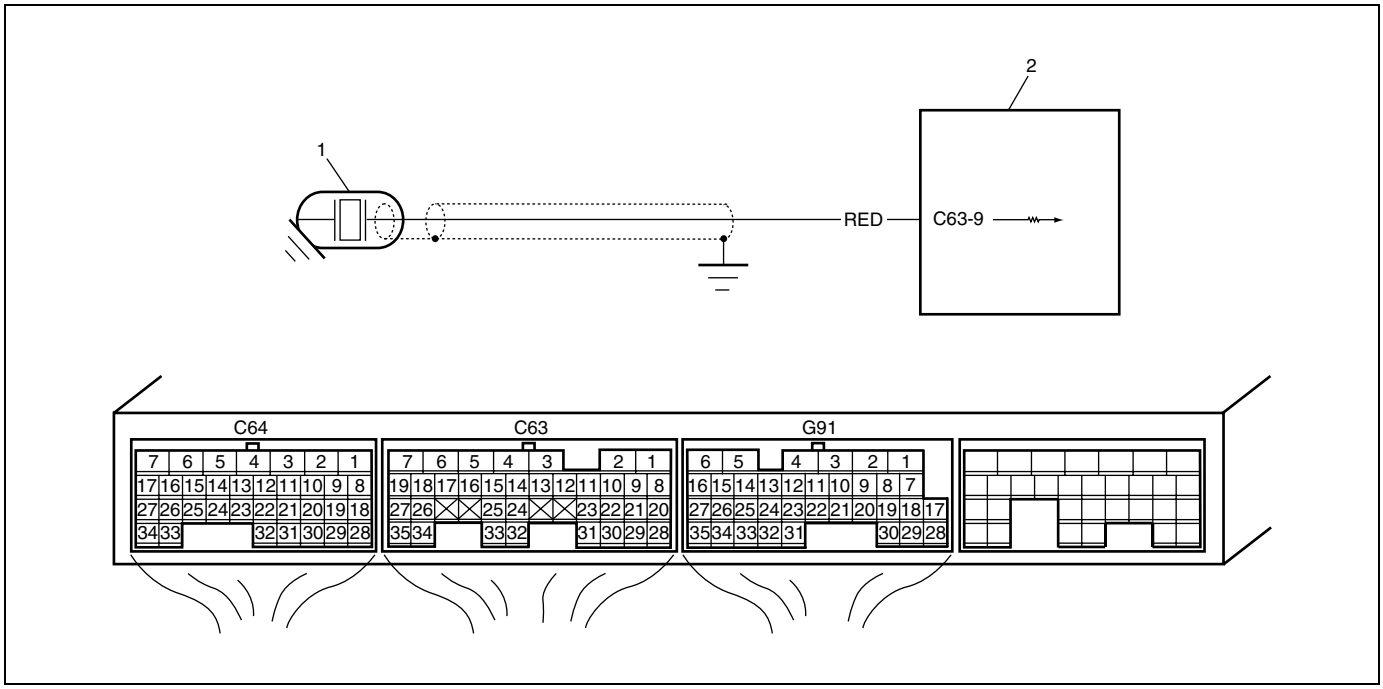

1. Knock sensor	2. ECM

DTC DETECTING CONDITION AND TROUBLE AREA

DTC DETECTING CONDITION	TROUBLE AREA
DTC will be set when all of the following conditions are detected for 5 seconds continuously. P0327 • Engine is running • Voltage of knock sensor is less than 0.9 V P0328 • Engine is running • Voltage of knock sensor is 4 V or more	• Open or short in knock sensor circuit • Knock sensor • ECM

DTC CONFIRMATION PROCEDURE

NOTE:

Check to make sure that the following conditions are satisfied when using this DTC CONFIRMATION PROCEDURE.

- **Intake air temp.: –7°C (19.4°F) or higher**
- **Engine coolant temp.: –7°C (19.4°F) or higher**
- **Altitude (barometric pressure): 2400 m, 8000 ft or less (560 mmHg, 75 kPa or more)**

1) Connect scan tool to DLC with ignition switch turned OFF.
2) Turn ON ignition switch and clear DTC, pending DTC and freeze frame data by using scan tool.
3) Start engine and run it for 10 sec.
4) Check DTC by using scan tool.

TROUBLESHOOTING

Step	Action	Yes	No
1	Was “Engine and Emission Control System Check” performed?	Go to Step 2.	Go to “Engine and Emission Control System Check” in this section.
2	Check sensor circuit. 1) Disconnect connectors from ECM with ignition switch turned OFF. 2) Remove ECM from vehicle body and connect connectors to ECM. 3) Measure voltage between “C63-9” wire terminal of ECM connector and vehicle body ground with engine running. Is voltage within 0.9 – 4 V?	Intermittent trouble. Check for intermittent refer to “Intermittent and Poor Connection” in Section 0A. If OK, substitute a known-good ECM and recheck.	Go to Step 3.
3	Check sensor circuit for open. 1) Disconnect connector from knock sensor with ignition switch turned OFF. 2) Turn ON ignition switch, measure voltage between “RED” wire of knock sensor connector and engine ground. See Fig. 1. Is voltage 4 – 6 V?	Go to Step 6.	Go to Step 4.
4	Check sensor circuit for open. 1) Turn ON ignition switch, measure voltage between “C63-9” wire terminal of ECM connector and engine ground. Is voltage 4 – 6 V?	“RED” wire in open circuit.	Go to Step 5.
5	Check sensor circuit for short. 1) Disconnect connectors from ECM with ignition switch turned OFF. 2) Measure resistance between “C63-9” terminal of ECM connector and vehicle body ground. Is resistance infinity?	Go to Step 6.	“RED” wire in shorted to ground circuit. If wire is OK, substitute a known-good ECM and recheck.

Step	Action	Yes	No
6	Check sensor circuit for short. 1) Turn ON ignition switch, measure voltage between “C63-9” terminal of ECM connector and vehicle body ground. Is voltage 0 V?	Go to Step 7.	“RED” wire in shorted to other circuit.
7	Check sensor circuit for high resistance. 1) Measure resistance between “C63-9” wire terminal of ECM connector and “RED” wire terminal of knock sensor harness connector. Is resistance below 5Ω?	Faulty knock sensor	“RED” wire in high resistance circuit.

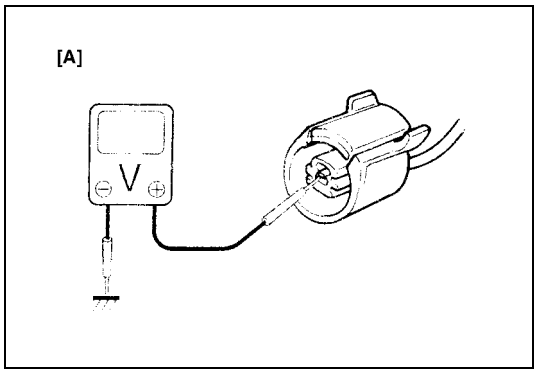

[A]: Fig. 1 for Step 3

DTC P0335 Crankshaft Position (CKP) Sensor Circuit

WIRING DIAGRAM

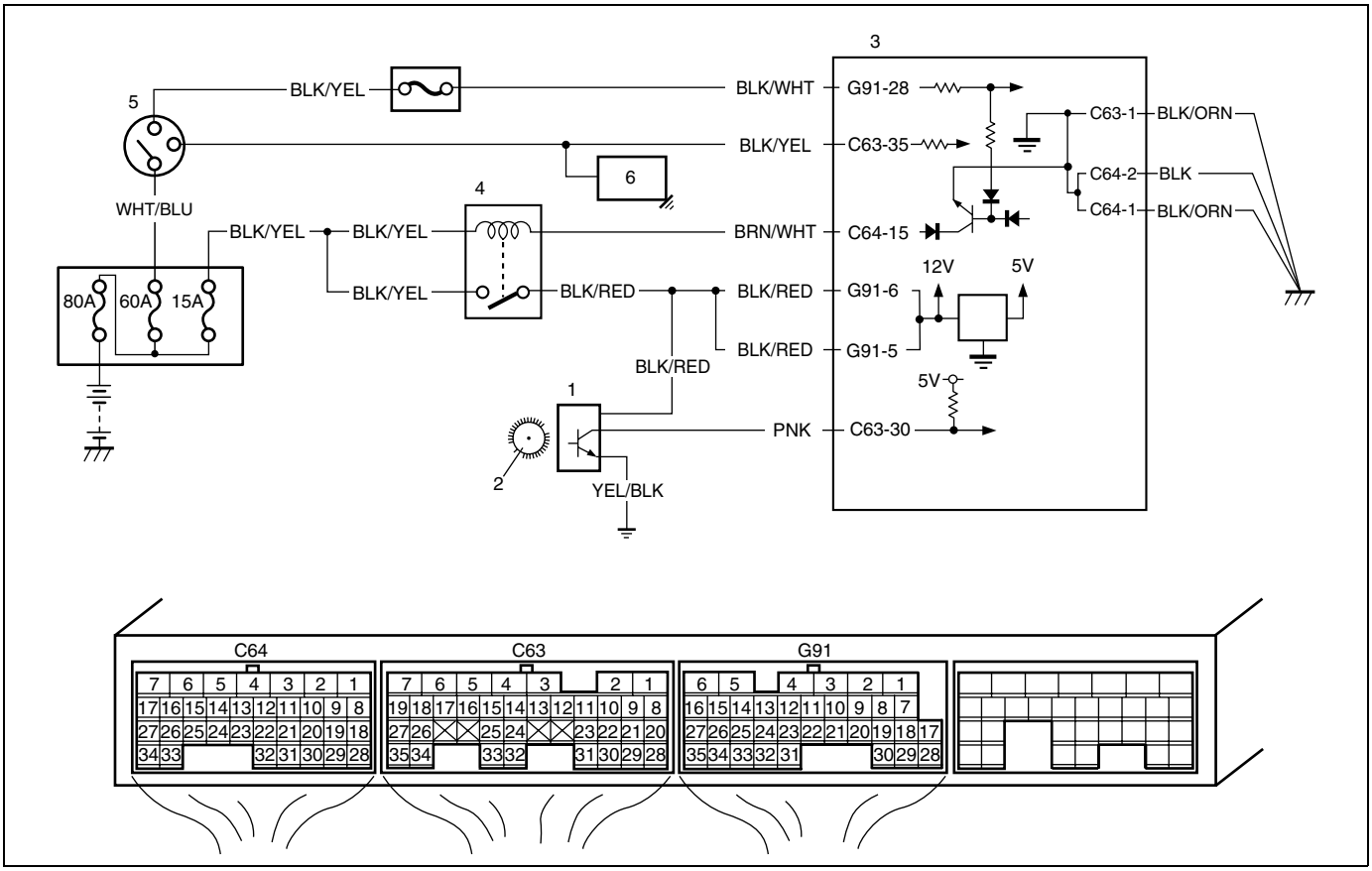

1. CKP sensor	4. Main relay
2. Sensor plate on crankshaft	5. Ignition switch
3. ECM	6. Starting motor

DTC DETECTING CONDITION AND TROUBLE AREA

DTC DETECTING CONDITION	TROUBLE AREA
No CKP sensor signal for 3 seconds at engine cranking while starting motor signal is inputting	• CKP sensor circuit open or short • Crankshaft timing pulley teeth damaged • CKP sensor malfunction, foreign material being attached or improper installation • ECM • Engine start signal circuit malfunction

DTC CONFIRMATION PROCEDURE

1) With ignition switch turned OFF, connect scan tool.
2) Turn ON ignition switch and clear DTC using scan tool.
3) Crank engine for 3 – 5 sec.
4) Check DTC and pending DTC.

TROUBLESHOOTING

Step	Action	Yes	No
1	Was “Engine and Emission Control System Check” performed?	Go to Step 2.	Go to “Engine and Emission Control System Check” in this section.
2	Check CKP sensor and connector for proper installation. Is CKP sensor installed properly and connector connected securely?	Go to Step 3.	Correct.
3	Check Wire Harness and Connection. 1) Disconnect connector from CKP sensor. 2) Check for proper connection to CKP sensor at “BLK/RED”, “PNK” and “YEL/BLK” wire terminals. 3) If OK, turn ignition switch ON and check for voltage at “BLK/RED”, “PNK” and “YEL/BLK” wire terminals of disconnected CKP sensor connector. See Fig. 1. Terminal “B+”: 10 – 14 V Terminal “Vout”: 4 – 5 V Terminal “GRD”: 0 V Is check result satisfactory?	Go to Step 5.	Go to Step 4.
4	Was terminal “Vout” voltage in Step 3 out of specification?	“PNK” wire open, short or poor connection. If wire and connection are OK, substitute a known-good ECM and recheck.	“BLK/RED” and “YEL/BLK” wire open, short or poor connection.
5	Check Ground Circuit. 1) Turn ignition switch to OFF position. 2) Measure resistance between “YEL/BLK” wire terminal of CKP sensor connector and engine ground. Is resistance below 5 Ω?	Go to Step 6.	“YEL/BLK” wire open or high resistance.
6	Check Engine Start Signal. 1) Check voltage between “C63-35” wire terminal of ECM connector and engine ground with engine cranking. Does it voltage more than 6 V?	Go to Step 7.	“BLK/YEL” wire circuit open, high resistance or shorted to ground. If wire are OK, check starting motor referring to “Starting Motor Inspection” in Section 6G.

Step	Action	Yes	No
7	Check CKP Sensor. 1) Remove CKP sensor referring to “Crankshaft position sensor (CKP sensor) removal and installation” in Section 6E1. 2) Remove metal particles on end face of CKP sensor, if any. 3) Connect CKP sensor connector. 4) Turn ignition switch to ON position. 5) Check voltage between “C63-30” wire terminal of ECM connector and engine ground by passing magnetic substance (iron) (1) while keeping approx. 1 mm (0.03 in.) gap with respect to end face of CKP sensor. See Fig. 2. Does voltage vary from low (0 – 1 V) to high (4 – 5 V) or from high to low?	Go to Step 8.	Replace CKP sensor.
8	Check signal rotor for the following. See Fig. 3. • Damage • No foreign material attached Is it in good condition?	Intermittent trouble or faulty ECM. Check for intermittent referring to “Intermittent and Poor Connection” in Section 0A.	Clean rotor teeth or replace signal rotor.

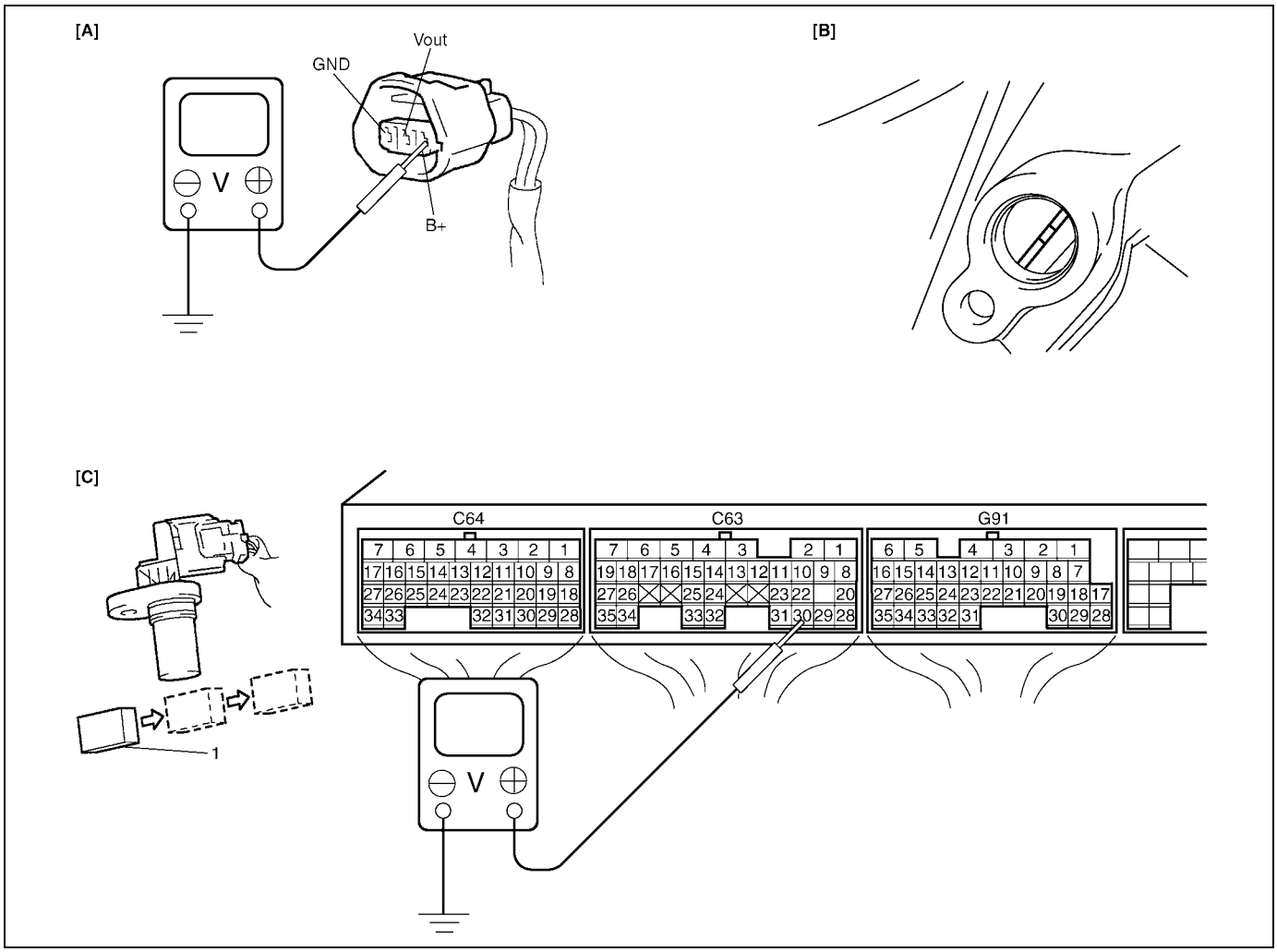

[A]: Fig. 1 for Step 3	[B]: Fig. 3 for Step 8	[C]: Fig. 2 for Step 7

DTC P0340 Camshaft Position Sensor Circuit

WIRING DIAGRAM

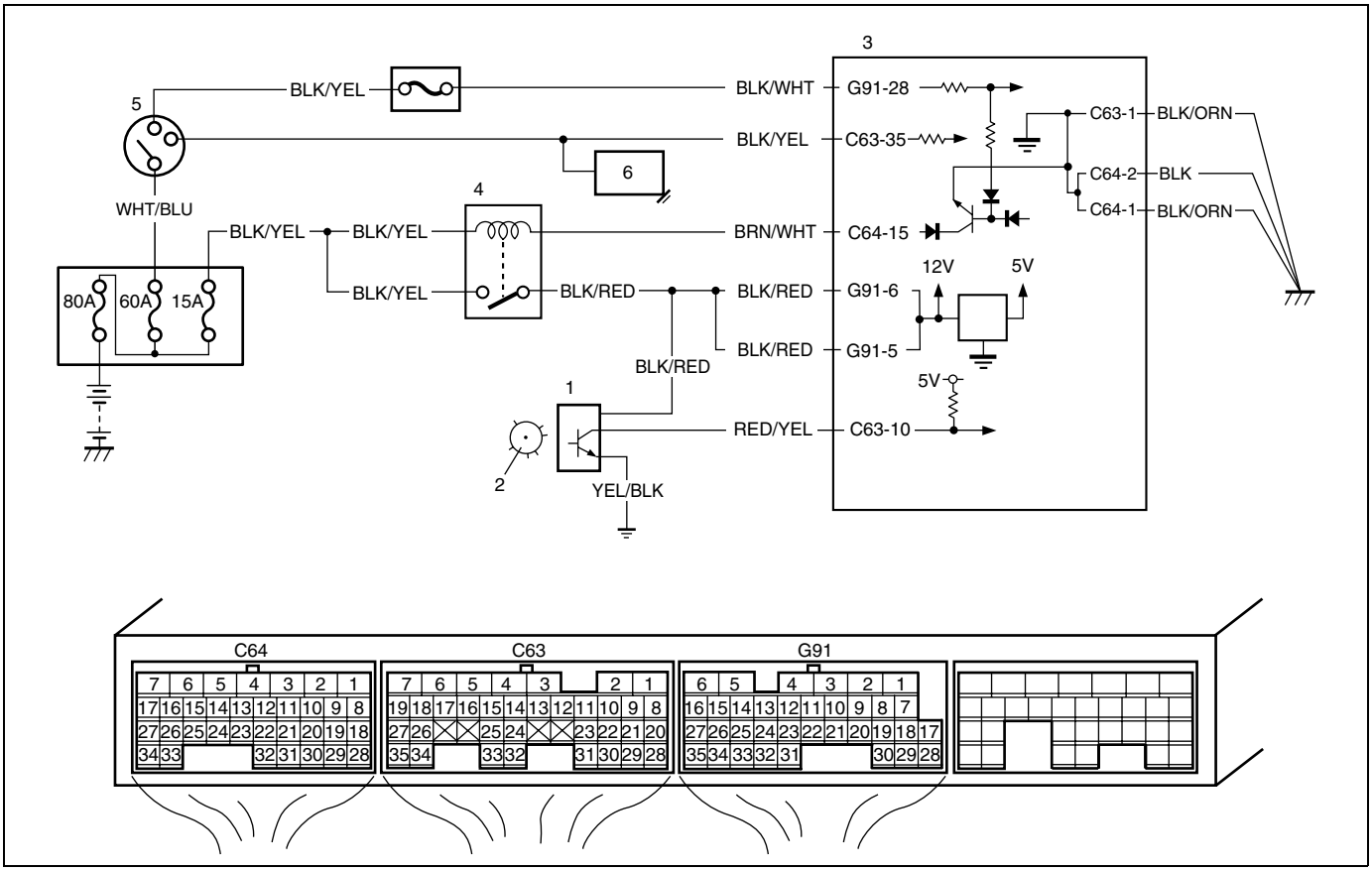

1. CMP sensor	3. ECM	5. Ignition switch
2. Signal rotor	4. Main relay	6. Starting motor

SYSTEM DESCRIPTION

The CMP sensor located on the transmission side of cylinder head consists of the signal generator (magnetic sensor) and signal rotor (intake camshaft portion).
The signal generator generates Reference signal through slits in the slit plate which turns together with the camshaft.

Reference signal

The CMP sensor generates 6 pulses of signals each of which has a different waveform length while the camshaft makes one full rotation. Refer to “Inspection of ECM and Its Circuits” in this section.
Based on these signals, ECM judges which cylinder piston is in the compression stroke and the engine speed.

DTC DETECTING CONDITION AND TROUBLE AREA

DTC DETECTING CONDITION	TROUBLE AREA
No CMP sensor signal for 3 seconds at engine cranking while starting motor signal is inputting	• CMP sensor circuit open or short • Signal rotor teeth damaged • CMP sensor malfunction, foreign material being attached or improper installation • ECM • Engine start signal circuit malfunction

DTC CONFIRMATION PROCEDURE

1) With ignition switch turned OFF, connect scan tool.
2) Turn ON ignition switch and clear DTC using scan tool.
3) Crank engine for 5 sec.
4) Check DTC and pending DTC.

TROUBLESHOOTING

Step	Action	Yes	No
1	Was “Engine and Emission Control System Check?	Go to Step 2.	Go to “Engine and Emission Control System Check” in this section.
2	Check CMP sensor and connector for proper installation. Is CMP sensor installed properly and connector connected securely?	Go to Step 3.	Correct.
3	Check Wire Harness and Connection. 1) Disconnect connector from CMP sensor. 2) Check for proper connection to CMP sensor at “BLK/RED”, “RED/YEL” and “YEL/BLK” wire terminals. 3) If OK, turn ignition switch ON and check for voltage at “BLK/RED”, “RED/YEL” and “YEL/BLK” wire terminals of disconnected CMP sensor connector. See Fig. 1. Terminal “B+”: 10 – 14 V Terminal “Vout”: 4 – 5 V Terminal “GRD”: 0 V Is check result satisfactory?	Go to Step 5.	Go to Step 4.
4	Was terminal “Vout” voltage in Step 3 out of specification?	“RED/YEL” wire open, short or poor connection. If wire and connection are OK, substitute a known-good ECM and recheck.	“BLK/RED” and “YEL/BLK” wire open, short or poor connection.
5	Check Ground Circuit. 1) Turn ignition switch to OFF position. 2) Check for continuity between “YEL/BLK” wire terminal of CKP sensor connector and engine ground. Is continuity indicated?	Go to Step 6.	“YEL/BLK” wire open or poor connection.
6	Check Engine Start Signal. 1) Check voltage between “C63-35” wire terminal of ECM connector and engine ground with engine cranking. Does it voltage more than 6 V?	Go to Step 7.	“BLK/YEL” wire circuit open or shorted to ground. If wire are OK, check starting motor referring to “Starting Motor Inspection” in Section 6G.

Step	Action	Yes	No
7	Check CMP Sensor. 1) Remove CMP sensor referring to “Camshaft position sensor (CMP sensor) removal and installation” in Section 6E1. 2) Remove metal particles on end face of CMP sensor, if any. 3) Connect CMP sensor connector. 4) Turn ignition switch to ON position. 5) Check voltage between “C63-10” wire terminal of ECM connector and engine ground by passing magnetic substance (iron) (1) while keeping approx. 1 mm (0.03 in.) gap with respect to end face of CMP sensor. See Fig. 2. Does voltage vary from low (0 – 1 V) to high (4 – 5 V) or from high to low?	Go to Step 8.	Replace CMP sensor.
8	Check signal rotor for the following. See Fig. 3. • Damage • No foreign material attached Is it in good condition?	Intermittent trouble or faulty ECM. Check for intermittent referring to “Intermittent and Poor Connection” in Section 0A.	Clean rotor teeth or replace signal rotor.

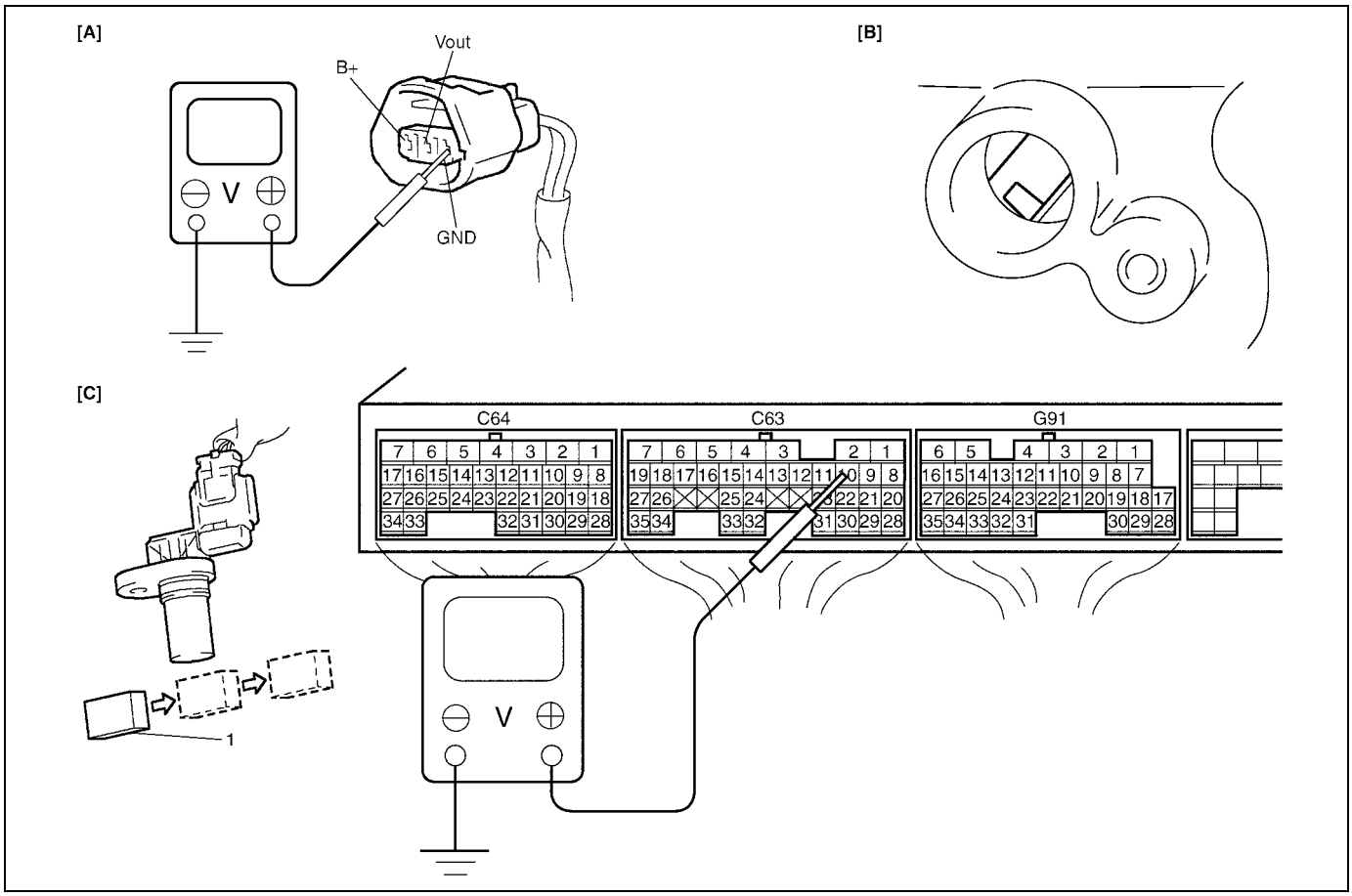

[A]: Fig. 1 for Step 3	[B]: Fig. 3 for Step 8	[C]: Fig. 2 for Step 7

DTC P0401 Exhaust Gas Recirculation Flow Insufficient Detected
DTC P0402 Exhaust Gas Recirculation Flow Excessive Detected

SYSTEM/WIRING DIAGRAM

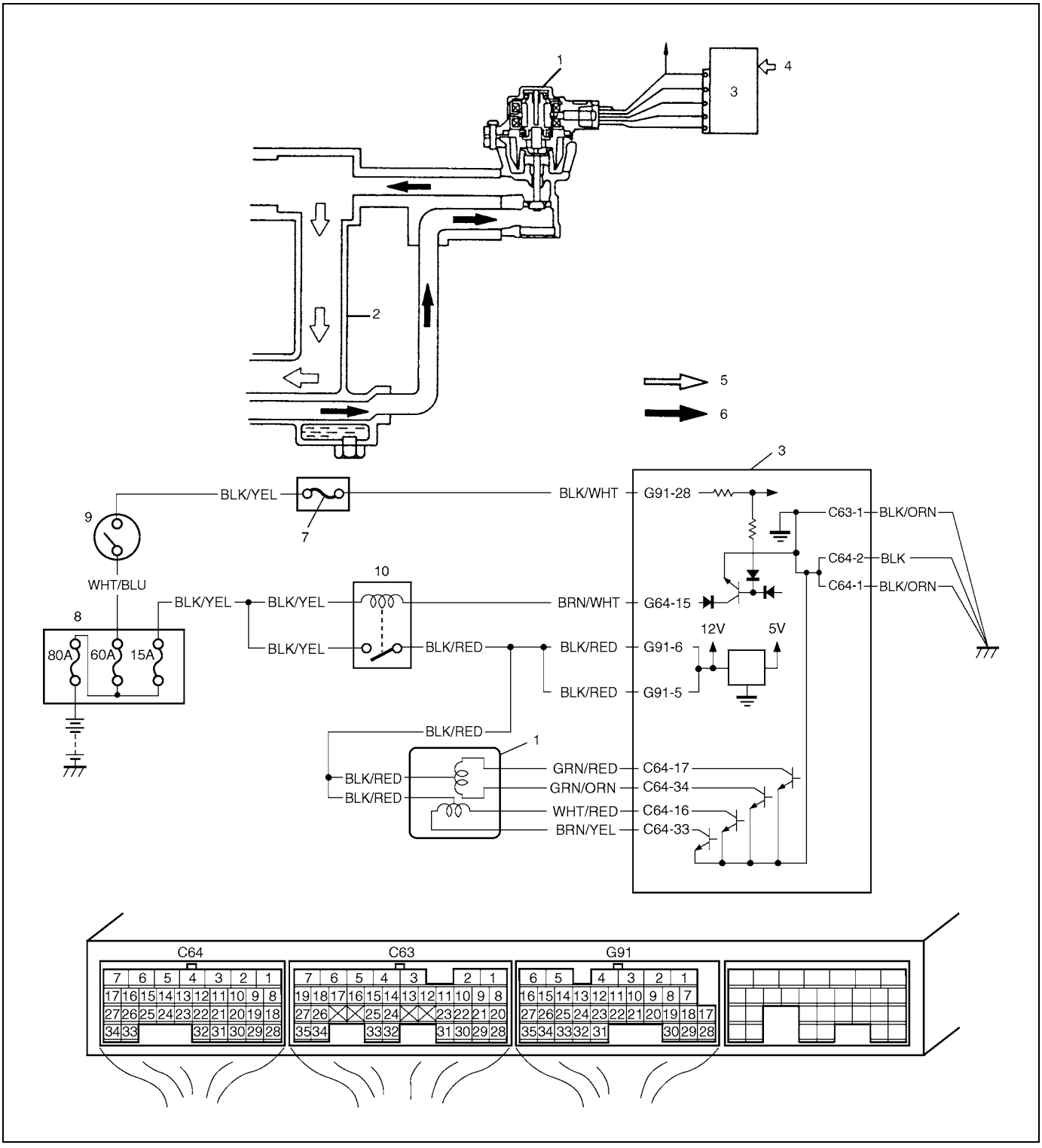

1. EGR value	4. Sensed information	7. "IG" fuse	10. Main relay
2. Intake manifold	5. Fresh air	8. Relay/fuse box	
3. ECM	6. Exhaust gas	9. Ignition switch	

DTC DETECTING CONDITION AND TROUBLE AREA (DTC P0401/P0402)

DTC DETECTING CONDITION	TROUBLE AREA
DTC P0401: Difference in intake manifold absolute pressure between opened EGR valve and closed EGR valve is smaller than specified value. DTC P0402: Difference in intake manifold absolute pressure between opened EGR valve and closed EGR valve is larger than specified value. (2 driving cycle detection logic)	• EGR valve • EGR passage • MAP sensor • ECM

DTC CONFIRMATION PROCEDURE (DTC P0401/P0402)

WARNING:

- **When performing a road test, select a place where there is no traffic or possibility of a traffic accident and be very careful during testing to avoid occurrence of an accident.**
- **Road test should be carried out with 2 persons, a driver and a tester, on a level road.**

NOTE:

Check to make sure that following conditions are satisfied when using this DTC CONFIRMATION PROCEDURE.

- **Intake air temp.: –7°C (19.4°F) or higher**
- **Engine coolant temp.: –7°C (19.4°F) or higher**
- **Altitude (barometric pressure): 2400 m, 8000 ft or less (560 mmHg, 75 kPa or more)**

1) With ignition switch turned OFF, connect scan tool.
2) Turn ON ignition switch and clear DTC using scan tool.
3) Start engine and warm up to normal operating temperature.
4) Increase engine speed to 3000 rpm in 3rd gear.
5) Release accelerator pedal and with engine brake applied, keep vehicle coasting for 5 sec. or more. (Keep fuel cut condition for 5 sec. or more) If fuel cut condition is not kept for 5 sec. or more, coast down a slope in engine speed 1000 – 3000 rpm for 5 sec. or more.
6) Step vehicle and run engine at idle.
7) Check DTC and pending DTC by using scan tool.

TROUBLESHOOTING

Step	Action	Yes	No
1	Was “Engine and Emission Control System Check” performed?	Go to Step 2.	Go to “Engine and Emission Control System Check”.
2	EGR valve operation check. 1) With ignition switch turned OFF, install Suzuki Scan Tool. 2) Check EGR system referring to “EGR system inspection” in Section 6E1. Is it in good condition?	Go to Step 3.	Go to Step 4.

Step	Action	Yes	No
3	MAP sensor check. 1) Check MAP sensor for performance referring to "MAP Sensor Individual Check" in "DTC P0108 Manifold Absolute Pressure High Input" Diag. Flow Table. Is check result satisfactory?	Intermittent trouble or faulty ECM Check for intermittent referring to "Intermittent and Poor Connection" in Section 0A.	Repair or replace.
4	EGR valve power supply circuit check. 1) With ignition switch turned OFF, disconnect EGR valve coupler. 2) With ignition switch turned ON, check voltage between "BLK/RED" wire terminal of EGR valve coupler and engine ground. Is each voltage 10 – 14 V?	Go to Step 5.	Faulty "BLK/RED" wire.
5	Check wire circuit. 1) Measure voltage between engine ground and each "GRN/RED", "GRN/ORN", "WHT/RED" and "BRN/YEL" wire terminal of EGR valve connector. Is each voltage 0 V?	Go to Step 6.	Some wire shorted to other circuits. If wires are OK, substitute a known-good ECM and recheck.
6	Check wire circuit. 1) With ignition switch turned OFF, check that there are insulating between engine ground and each "GRN/RED", "GRN/ORN", "WHT/RED" and "BRN/YEL" wire terminal of EGR valve connector. Are there insulating?	Go to Step 7.	Some wire shorted to ground circuit. If wires are OK, substitute a known-good ECM and recheck.
7	EGR valve stepping motor coil circuit check. 1) With ignition switch turned OFF, connect EGR valve coupler and disconnect ECM couplers. 2) Check resistance between "G91-5/6" and "C64-17", "C64-34", "C64-16", "C64-33" wire terminal of ECM connector. Is each resistance 20 – 24Ω at 20°C, 68°F.	Go to Step 8.	Faulty "GRN/RED", "GRN/ORN", "WHT/RED" and "BRN/YEL" wire or EGR valve.
8	Check wire circuit. 1) Measure voltage between engine ground and each "GRN/RED", "GRN/ORN", "WHT/RED" and "BRN/YEL" wire terminal of EGR valve connector. Is each voltage 10 – 14 V?	Some wire in high resistance circuit. If wires are good condition, faulty EGR valve.	Some wire open circuit. If wires are good condition, faulty EGR valve.
9	MAP sensor check: 1) Check MAP sensor for performance referring to "MAP Sensor Individual Check" in "DTC P0108" Diag. Flow Table. Is check result satisfactory?	EGR passage clogged or EGR valve malfunction, If all above are OK, substitute known-good ECM and recheck.	Repair or replace.

DTC P0403 Exhaust Gas Recirculation Control Circuit

WIRING DIAGRAM

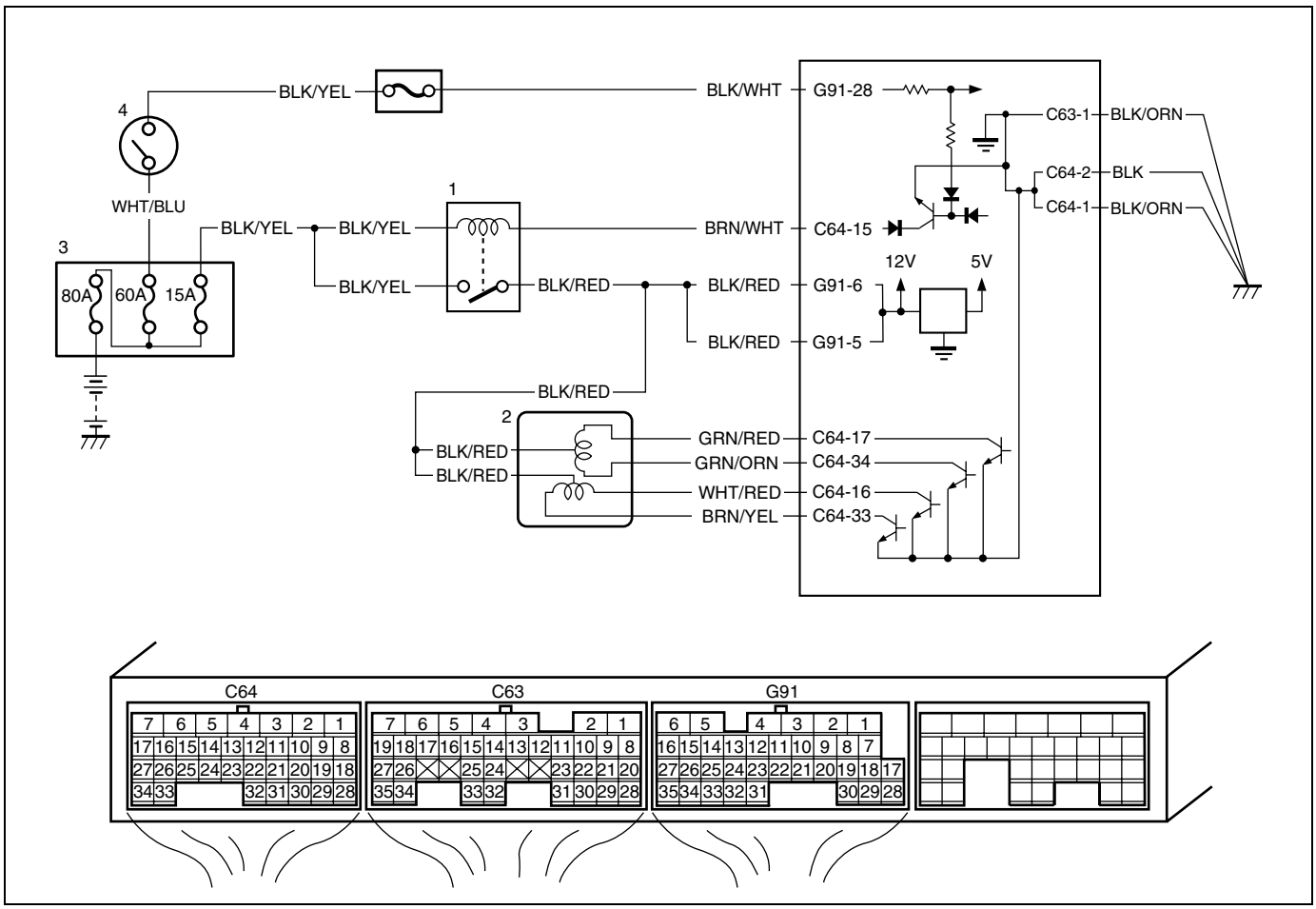

1. Main relay	2. EGR valve	3. Relay/fuse box	4. Ignition switch

DTC DETECTING CONDITION AND TROUBLE AREA

DTC DETECTING CONDITION	TROUBLE AREA
EGR valve output voltage is low although ECM commanded EGR valve to turn OFF. (1 driving cycle detection logic)	• EGR valve circuit open • EGR valve • ECM

DTC CONFIRMATION PROCEDURE

WARNING:

- **When performing a road test, select a place where there is no traffic or possibility of a traffic accident and be very careful during testing to avoid occurrence of an accident.**
- **Road test should be carried out with 2 persons, a driver and a tester, on a level road.**

1) With ignition switch turned OFF, connect scan tool to DLC.
2) Turn ON ignition switch and clear DTC using scan tool.
3) Start engine and warm it up to normal operating temperature.
4) Drive vehicle in 2000 – 3500 rpm of engine speed.
5) Keep above vehicle speed for 1 min. (Throttle valve opening is kept constant in this step.)
6) Stop vehicle and check DTC and pending DTC.

TROUBLESHOOTING

Step	Action	Yes	No
1	Was “Engine and Emission Control System Check” performed?	Go to Step 2.	Go to “Engine and Emission Control System Check” in this section.
2	EGR valve power supply circuit check. 1) Remove air intake pipe. 2) With ignition switch turned OFF, disconnect EGR valve coupler. 3) With ignition switch turned ON, check voltage between “BLK/RED” wire terminals of EGR valve coupler and body ground. Is check voltage 10 – 14 V?	Go to Step 3.	Faulty “BLK/RED” wire.
3	Check wire circuit. 1) Disconnect connectors from ECM with ignition switch turned OFF. 2) Turn ON ignition switch. 3) Measure voltage between engine ground and each “GRN/RED”, “GRN/ORN”, “WHT/RED”, “BRN/YEL” wire terminal of EGR valve connector. Is each voltage 0 V?	Go to Step 4.	Some wire shorted to other circuits. If wires are OK, substitute a known-good ECM and recheck.
4	Check wire circuit. 1) With ignition switch turned OFF, measure resistance between engine ground and each GRN/RED”, “GRN/ORN”, “WHT/RED”, “BRN/YEL” wire terminal of EGR valve connector. Is resistance infinity?	Go to Step 5.	Some wire shorted to ground circuit. If wires are OK, substitute a known-good ECM and recheck.
5	EGR valve stepper motor coil circuit check. 1) With ignition switch turned OFF, connect EGR valve coupler. 2) Check resistance between “G91-5/6” and each “C64-17”, “C64-34”, “C64-16”, “C64-33” wire terminal of ECM connector. Is each resistance 20 – 24 Ω at 20°C, 68°F?	Faulty ECM substitute a known-good ECM and recheck.	Go to Step 6.
6	Check wire circuit. 1) Connect connectors to ECM with ignition switch turned OFF. 2) Turn ON ignition switch. 3) Measure voltage between engine ground and each “GRN/RED”, “GRN/ORN”, “WHT/RED”, “BRN/YEL” wire terminal of EGR valve connector. Is each voltage 10 – 14 V?	Some wire in high resistance circuit. If wires are good condition, faulty EGR valve.	Some wire open circuit. If wires are good condition, faulty EGR valve.

DTC P0420 Catalyst System Efficiency Below Threshold

SYSTEM/WIRING DIAGRAM

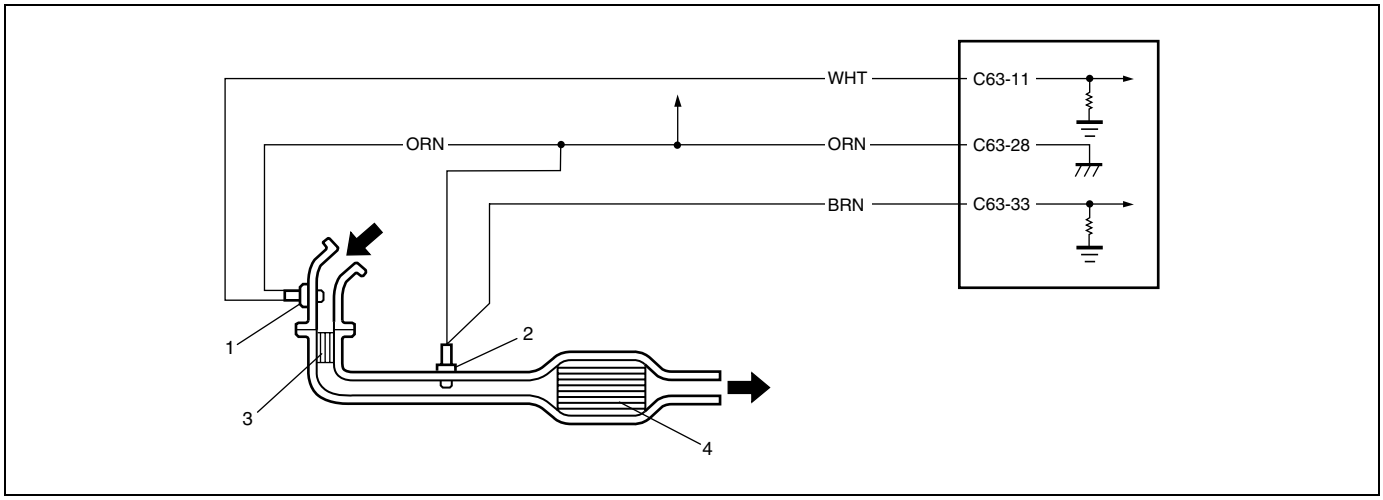

CIRCUIT DESCRIPTION

ECM monitors oxygen concentration in the exhaust gas which has passed the three way catalytic converter by HO2S–2 (2).

When the catalyst is functioning properly, the variation cycle of HO2S–2 (2) output voltage (oxygen concentration) is slower than that of HO2S–1 (1) output voltage because of the amount of oxygen in the exhaust gas which has been stored in warm up three way catalytic converter (4) and three way catalytic converter (4).

REFERENCE

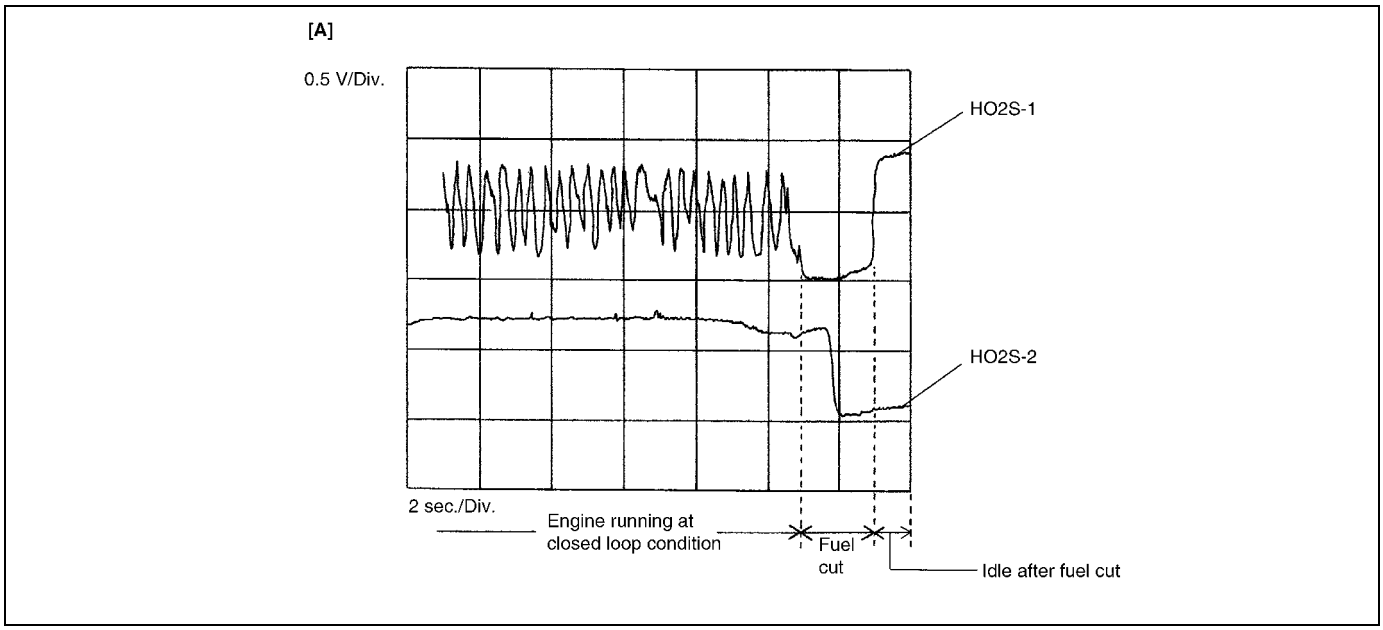

[A]: Oscilloscope Waveforms

DTC DETECTING CONDITION AND TROUBLE AREA

DTC DETECTING CONDITION	TROUBLE AREA
• While vehicle running at constant speed under other than high load. • Time from rich or lean switching command is output till HO2S–2 output voltage crosses 0.45 V is less than specified value. ✱2 driving cycle detection logic, monitoring once/1 driving	• Exhaust gas leak • Three way catalytic converter malfunction • HO2S–2 malfunction • HO2S–1 malfunction

DTC CONFIRMATION PROCEDURE

WARNING:
- **When performing a road test, select a place where there is no traffic or possibility of a traffic accident and be very careful during testing to avoid occurrence of an accident.**
- **Road test should be carried out with 2 persons, a driver and a tester, on a level road.**

NOTE:

Check to make sure that following conditions are satisfied when using this DTC CONFIRMATION PROCEDURE.
- **Intake air temp.: –7°C (19.4°F) or higher**
- **Engine coolant temp.: –7°C (19.4°F) or higher**
- **Altitude (barometric pressure): 2400 m, 8000 ft or less (560 mmHg, 75 kPa or more)**

1) Connect scan tool to DLC with ignition switch turned OFF.
2) Turn ON ignition switch and clear DTC using scan tool.
3) Increase vehicle speed to 50 – 60 mph, 80 – 100 km/h. (engine speed: 2500 – 3000 r/min.)
4) Keep above vehicle speed for 10 min. or more (Throttle valve opening is kept constant in this step).
5) Stop vehicle and check if DTC/pending DTC exists using scan tool. If not, check if catalyst monitoring test has completed using scan tool. If not in both of above checks (i.e., no DTC/pending DTC and catalyst monitoring test not completed), check vehicle condition (environmental) and repeat step 3) through 5).

TROUBLESHOOTING

Step	Action	Yes	No
1	Was “Engine and Emission Control System Check” performed?	Go to Step 2.	Go to “Engine and Emission Control System Check” in this section.
2	Exhaust system visual inspection. 1) Check exhaust system for leaks, damage and loose connection. Is it in good condition?	Go to Step 3.	Repair or replace.
3	HO2S–2 output voltage check. 1) Check output voltage of HO2S–2 referring to “DTC P0137 O2 Sensor (HO2S) Circuit Low Voltage (Sensor-2)” or “DTC P0138 O2 Sensor (HO2S) Circuit High Voltage (Sensor-2)”. Is check result satisfactory?	Replace three way catalytic converter.	Check “WHT” and “ORN” wires for open and short, and connections for poor connection. If wires and connections are OK, replace HO2S–2.

DTC P0443 Evaporative Emission System Purge Control Valve Circuit

WIRING DIAGRAM

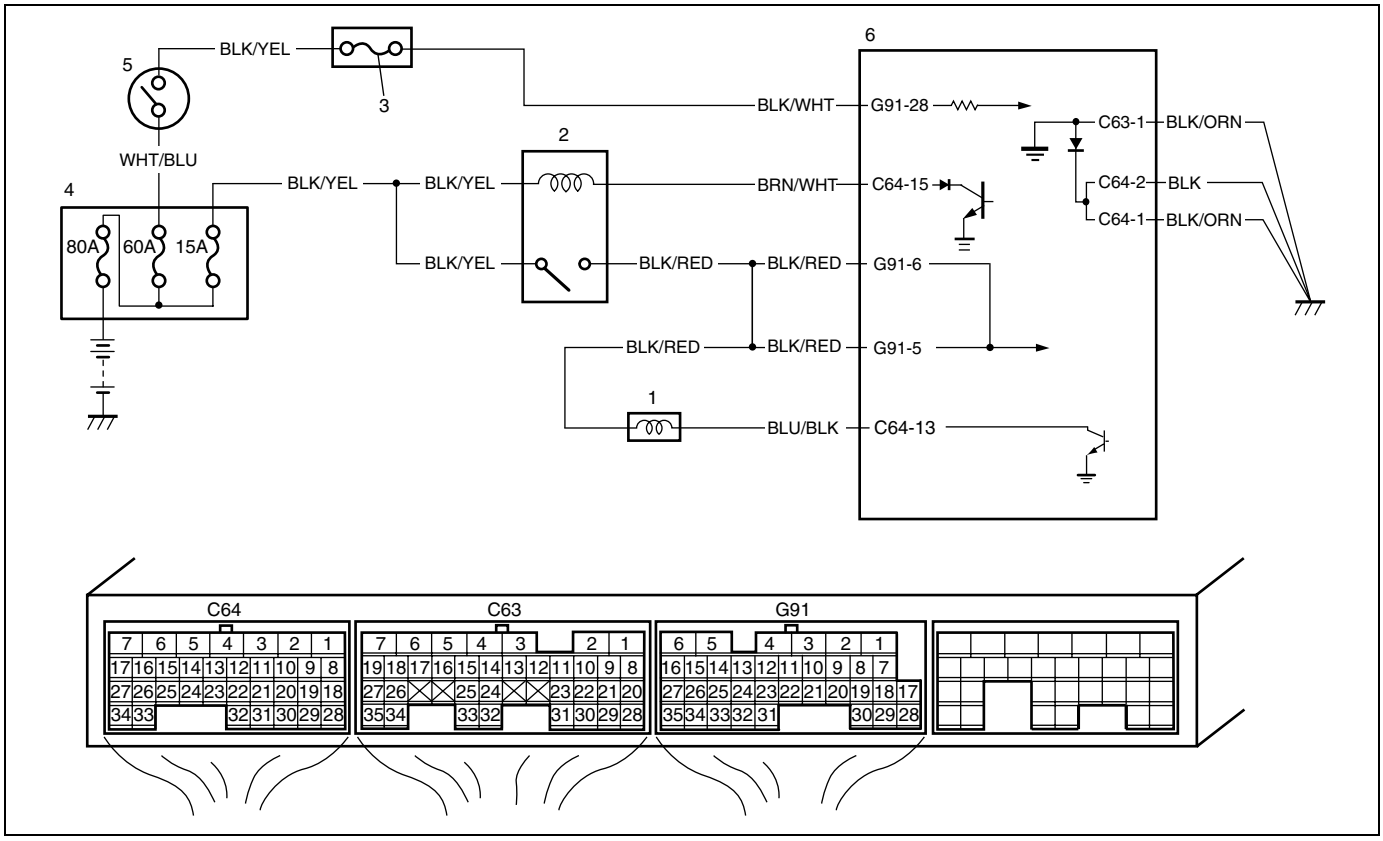

1. EVAP canister purge valve	3. "IG" fuse	5. Ignition switch
2. Main relay	4. Relay/fuse box	6. ECM

DTC DETECTING CONDITION AND TROUBLE AREA

DTC DETECTING CONDITION	TROUBLE AREA
Monitor signal of EVAP canister purge valve is different from command signal. (Circuit open or short) (2 driving cycle detection logic)	• EVAP canister purge valve • EVAP canister purge valve circuit • ECM

DTC CONFIRMATION PROCEDURE

WARNING:

- **When performing a road test, select a place where there is no traffic or possibility of a traffic accident and be very careful during testing to avoid occurrence of an accident.**
- **Road test should be carried out with 2 persons, a driver and a tester, on a level road.**

1) With ignition switch OFF, connect scan tool to DLC.
2) Turn On ignition switch and clear DTC using scan tool.
3) Start engine and run engine at idle speed (600 rpm or more) for 1 minute with all electric loads turned OFF.
4) Check DTC and pending DTC.

TROUBLESHOOTING

WARNING:
In order to reduce risk of fire and personal injury, this work must be performed in a well ventilated area and away from any open flames such as gas hot water.

Step	Action	Yes	No
1	Was “Engine and Emission Control System Check” performed?	Go to Step 2.	Go to “Engine and Emission Control System Check”.
2	Check EVAP canister purge power supply circuit. 1) Turn OFF ignition switch, disconnect connector from EVAP canister purge valve. 2) Measure voltage between engine ground and “BLK/RED” wire terminal of EVAP canister purge valve connector with ignition switch turned ON. Is it voltage 10 – 14 V?	Go to step 3.	“BLK/RED” wire open circuit.
3	Check wire circuit. 1) Disconnect connectors from ECM with ignition switch turned OFF. 2) Measure resistance between “C64-13” terminal of ECM connector and vehicle body ground. Is resistance infinity?	Go to Step 4.	“BLU/BLK” wire shorted to ground circuit.
4	Check wire circuit. 1) Measure voltage between “C64-13” terminal of ECM connector and vehicle body ground. Is voltage 0 V?	Go to Step 5.	“BLU/BLK” wire shorted to others circuit.
5	Check wire circuit. 1) Connect connector to purge control valve with ignition switch turned OFF. 2) Remove ECM from vehicle body and then connect connectors to ECM. 3) Turn ON ignition switch, measure voltage between “C64-13” terminal of ECM connector and vehicle body ground. Is it voltage 10-14 V?	Go to Step 6.	“BLU/BLK” wire open circuit.
6	Check EVAP canister purge control valve. 1) Check EVAP canister purge control valve referring to “Evaporative emission control system inspection” in Section 6E1. Is it in good condition?	Go to Step 7.	Faulty EVAP canister purge control valve.
7	Check EVAP canister purge control circuit. 1) With ignition switch turn OFF, measure resistance between “G91-5/6” terminal and “C64-13” terminal of ECM connector. Is resistance below 40 Ω at 20°C, 68°F?	Faulty ECM, substitute a known-good ECM and recheck.	“BLK/RED” and/or “BLU/BLK” wire in high resistance circuit.

DTC P0462 Fuel Level Sensor Circuit Low

WIRING DIAGRAM

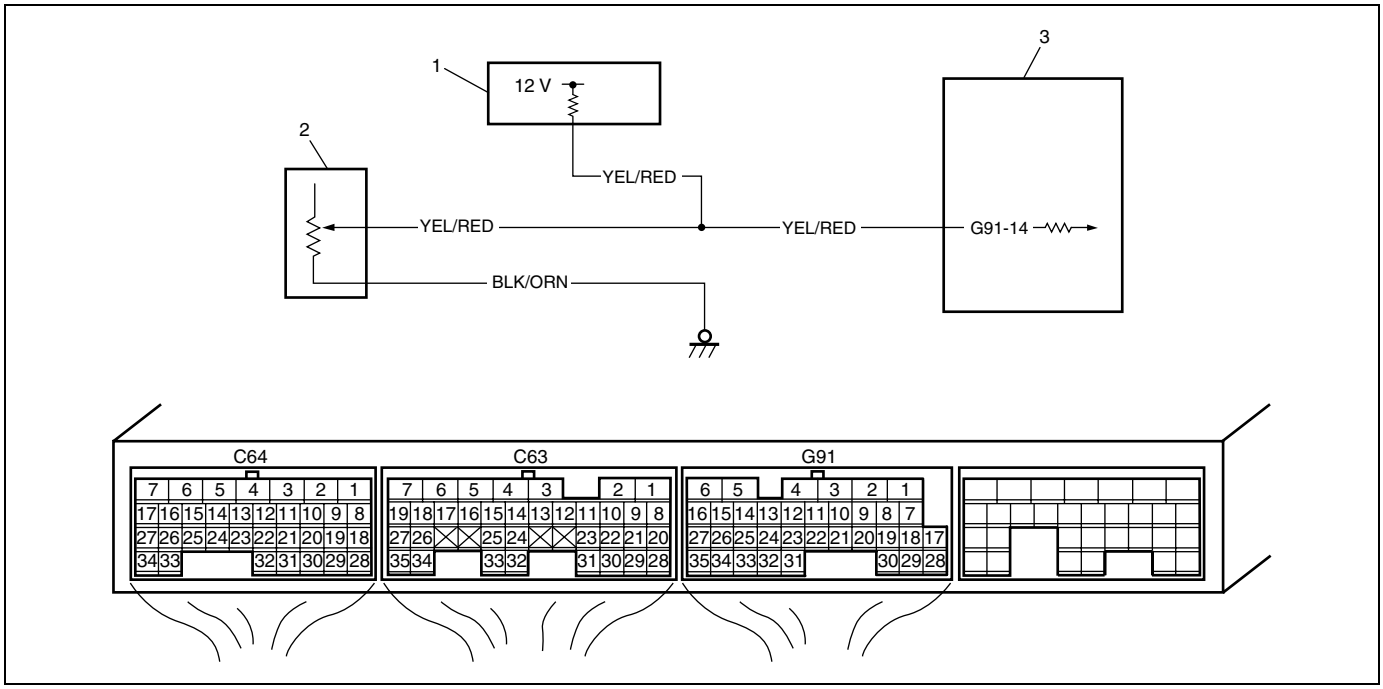

1. Fuel level meter in combination meter
2. Fuel level sensor (gauge)
3. ECM

DTC DETECTING CONDITION AND TROUBLE AREA

DTC DETECTING CONDITION	TROUBLE AREA
• Fuel level sensor voltage is lower than 0.16 V for 5 seconds continuously. (2 driving cycle detection logic)	• "YEL/RED" circuit short • Fuel level sensor malfunction • ECM malfunction • Combination meter malfunction

DTC CONFIRMATION PROCEDURE

1) With ignition switch turned OFF, connect scan tool.
2) Turn ON ignition switch and clear DTC using scan tool.
3) Start engine and run it for 30 sec. or more.
4) Check DTC and pending DTC.

TROUBLESHOOTING

Step	Action	Yes	No
1	Was "Engine and Emission Control System Check" performed?	Go to Step 2.	Go to "Engine and Emission Control System Check" in this section.
2	Do you have Suzuki Scan Tool?	Go to Step 3.	Go to Step 4.

Step	Action	Yes	No
3	Fuel Level Sensor Output Signal Check with Suzuki Scan Tool 1) Connect Suzuki Scan Tool to DLC with ignition switch turned OFF. 2) Turn ON ignition switch and check fuel level displayed on Suzuki Scan Tool. Is 100% displayed?	Go to Step 5.	Intermittent trouble or faulty ECM. Check for intermittent referring to "Intermittent and Poor Connection" in Section 0A.
4	Fuel Level Sensor Output Signal Check 1) Disconnect connectors from ECM with ignition switch turned OFF. 2) Remove ECM from vehicle body and then connect connectors to ECM. 3) Turn ON ignition switch and measure voltage between "G91-14" wire terminal of ECM connector and vehicle body ground. Is voltage about 3.5 V or less?	Go to Step 5.	Intermittent trouble or faulty ECM. Check for intermittent referring to "Intermittent and Poor Connection" in Section 0A.
5	Fuel Level Sensor Output Signal Circuit Check 1) Disconnect connectors from combination meter referring to "Combination Meter Removal and Installation" in Section 8C. 2) Remove fuel pump referring to "Fuel Pump Assembly Removal and Installation" in Section 6C. 3) Disconnect connectors from ECM. 4) Measure resistance between "G91-14" wire terminal of ECM connector and vehicle body ground. Is it infinite?	Go to Step 6.	"YEL/RED" wire shorted to ground circuit.
6	Combination Meter Check 1) Check fuel gauge referring to Fuel Gauge Inspection" in Section 8C. Is it in good condition?	Go to Step 7.	Faulty combination meter.
7	Check Fuel Level Sensor 1) Check fuel level sensor referring to "Fuel Level Sensor (Gauge Unit) Inspection" in Section 8C. Is it in good condition?	Substitute a known-good ECM and recheck.	Faulty fuel level sensor.

DTC P0463 Fuel Level Sensor Circuit High

WIRING DIAGRAM

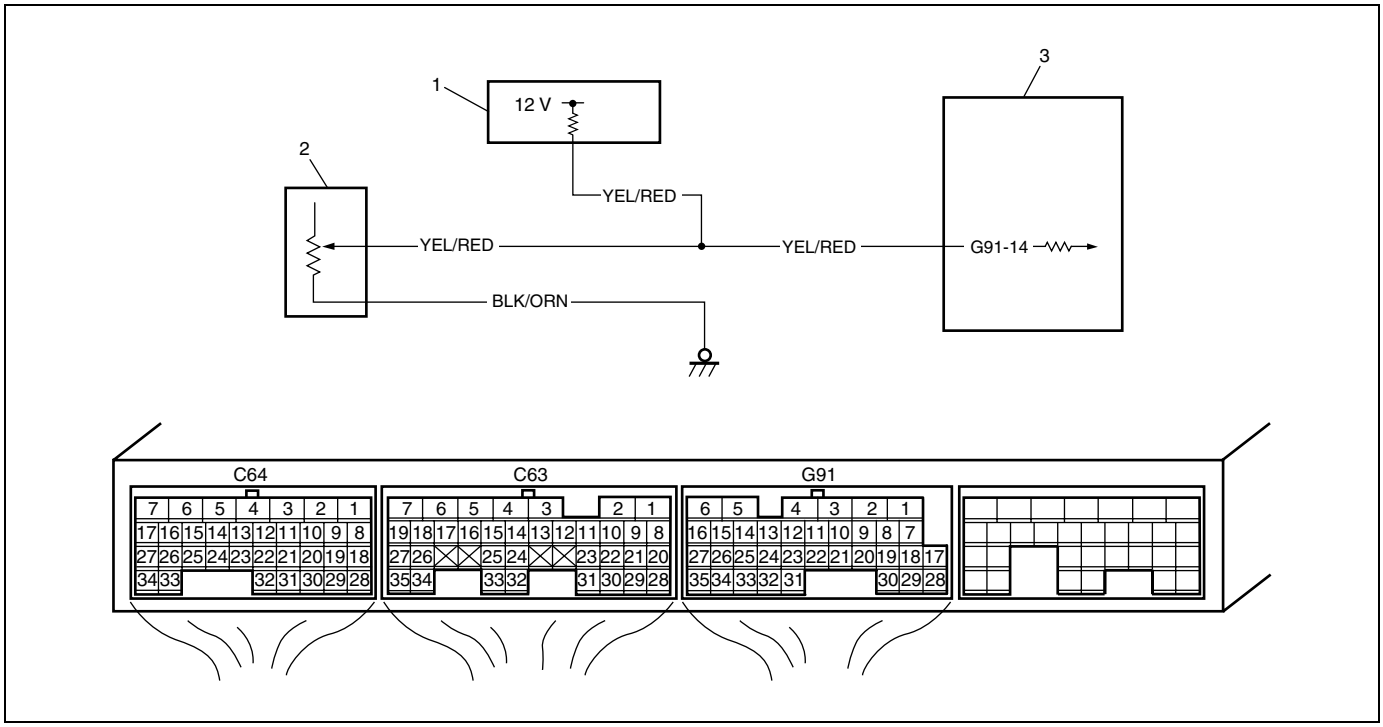

1. Fuel level meter in combination meter
2. Fuel level sensor (gauge)
3. ECM

DTC DETECTING CONDITION AND TROUBLE AREA

DTC DETECTING CONDITION	TROUBLE AREA
• Fuel level sensor voltage is higher than 7.1 V for 5 seconds continuously. (2 driving cycle detection logic)	• "YEL/RED" or "BLK/ORN" circuit open • Fuel level sensor malfunction • ECM malfunction • Combination meter faulty

DTC CONFIRMATION PROCEDURE

1) With ignition switch turned OFF, connect scan tool.
2) Turn ON ignition switch and clear DTC using scan tool.
3) Start engine and run it for 30 sec. or more.
4) Check DTC and pending DTC.

TROUBLESHOOTING

Step	Action	Yes	No
1	Was "Engine and Emission Control System Check" performed?	Go to Step 2.	Go to "Engine and Emission Control System Check" in this section.
2	Does fuel level meter in combination meter indicate "E" (empty)?	Replenish fuel tank with fuel and go to Step 3.	Go to Step 3.
3	Do you have Suzuki Scan Tool?	Go to Step 4.	Go to Step 5.

Step	Action	Yes	No
4	Fuel Level Sensor Output Signal Check with Suzuki Scan Tool 1) Connect Suzuki Scan Tool to DLC with ignition switch turned OFF. 2) Turn ON ignition switch and check fuel level displayed on Suzuki Scan Tool. Is it 3% or less?	Go to Step 6.	Intermittent trouble or faulty ECM. Check for intermittent referring to "Intermittent and Poor Connection" in Section 0A.
5	Fuel Level Sensor Output Signal Check 1) Disconnect connectors from ECM with ignition switch turned OFF. 2) Remove ECM from vehicle body and then connect connectors to ECM. 3) Turn ON ignition switch and measure voltage between "G91-14" wire terminal of ECM connector and vehicle body ground. Is voltage about 3.5 V or more?	Go to Step 6.	Intermittent trouble or faulty ECM. Check for intermittent referring to "Intermittent and Poor Connection" in Section 0A.
6	Fuel Level Sensor Circuit Resistance Check 1) Disconnect connectors from ECM with ignition switch turned OFF. 2) Check for proper connection to "G91-14" wire terminal of ECM connector. 3) If OK, measure resistance between "G91-14" wire terminal of ECM connector and vehicle body ground. Is resistance below 280 Ω?	Go to Step 7.	Go to Step 9.
7	Fuel Level Sensor Output Signal Circuit Check for Short 1) Disconnect connectors from combination meter referring to "Combination Meter Removal and Installation" in Section 8C. 2) Turn ON ignition switch and measure voltage between "G91-14" wire terminal of ECM connector and vehicle body ground. Is voltage 0 V?	Go to Step 8.	"YEL/RED" wire shorted to power supply circuit.
8	Check ECM Voltage 1) Connect connectors to ECM with ignition switch turned OFF. 2) Turn ON ignition switch and measure voltage between "G91-14" wire terminal of ECM connector and vehicle body ground. Is voltage below 0.1 V?	Faulty combination meter.	Substitute a known-good ECM and recheck.
9	Fuel Level Sensor Output Signal Circuit Check for Open 1) Turn OFF ignition switch and then disconnect combination meter connector referring to "Combination Meter Removal and Installation" in Section 8C. 2) Check for proper connection to "YEL/RED" wire terminal of combination meter connector. 3) If OK, measure resistance between "G91-14" wire terminal of ECM connector and "YEL/RED" wire terminal of combination meter connector. Is resistance below 10 Ω?	Go to Step 10.	"YEL/RED" wire in open or high resistance circuit at between ECM wire terminal and combination meter wire terminal.

Step	Action	Yes	No
10	Fuel Level Sensor Output Signal Circuit Check for Open 1) Remove fuel pump referring to “Fuel Pump Assembly Removal and Installation” in Section 6C. 2) Connect connectors to combination meter. 3) Turn ON ignition switch, measure voltage between “YEL/RED” wire terminal of disconnected fuel pump connector and vehicle body ground. Is voltage 10 – 14 V?	Go to Step 11.	“YEL/RED” wire circuit open.
11	Fuel Level Sensor Ground Circuit Check 1) Turn ignition switch to OFF position. 2) Check for proper connection to “BLK/ORN” wire terminal of fuel pump connector. 3) If OK, measure resistance between “BLK/ORN” wire terminal of fuel pump connector and vehicle body ground. Is resistance below 5 Ω?	Go to Step 12.	“BLK/ORN” wire in open or high resistance circuit.
12	Fuel Level Sensor Circuit Check for High Resistance 1) Check for proper connection to “YEL/RED” wire terminal of fuel pump connector. 2) If OK, measure resistance between “YEL/RED” wire terminal of fuel pump connector and “G91-14” wire terminal of ECM connector. Is resistance below 10 Ω?	Go to Step 13.	“YEL/RED” wire in high resistance circuit.
13	Check Fuel Level Sensor 1) Check fuel level sensor referring to “Fuel Level Sensor (Gauge Unit) Inspection” in Section 8C. Is it in good condition?	Faulty combination meter.	Faulty fuel level sensor.

DTC P0480 Fan 1 (Radiator Cooling Fan) Control Circuit

WIRING DIAGRAM

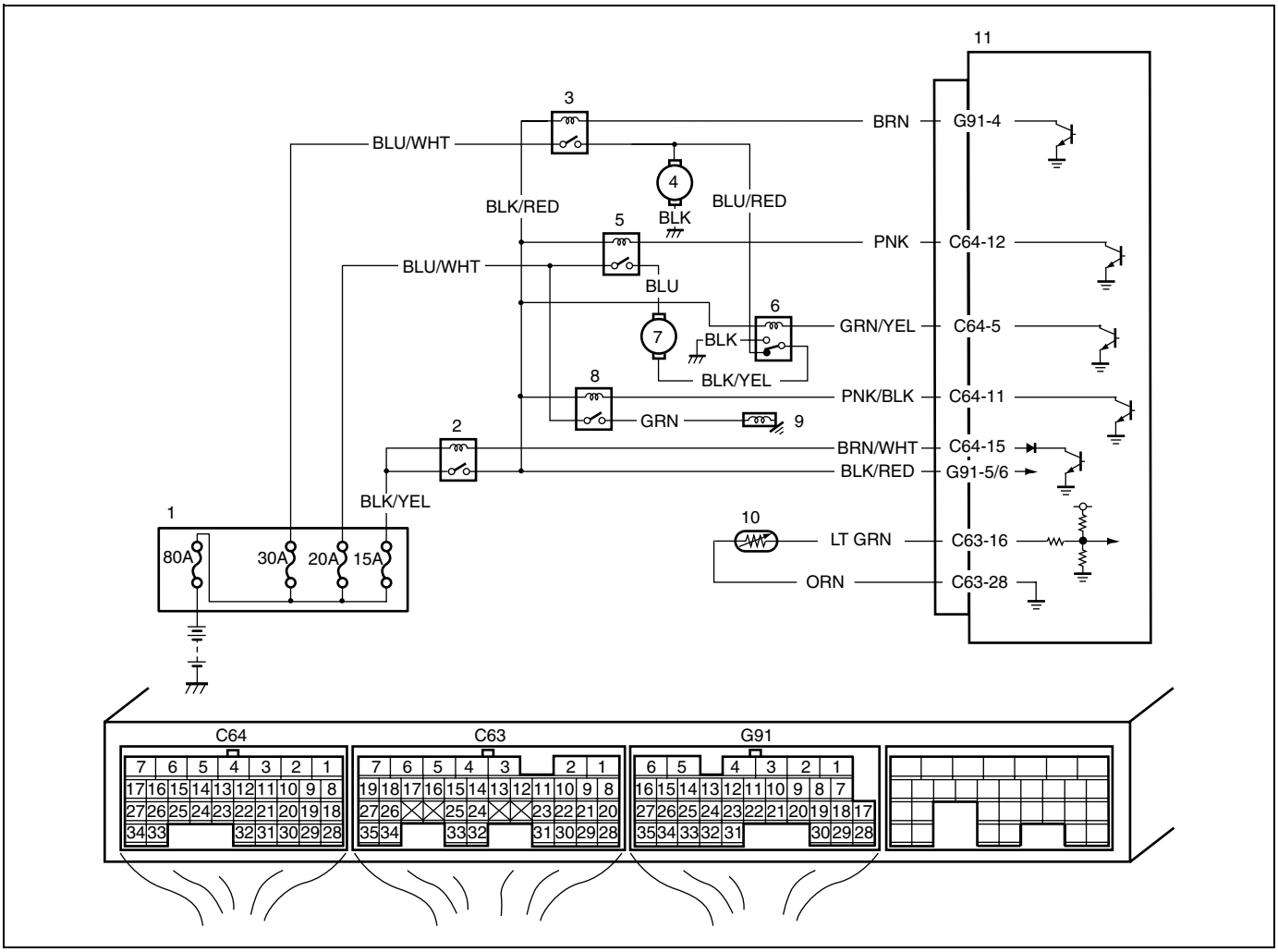

1. Relay/fuse box	4. Radiator fan motor	7. A/C condenser fan motor	10. ECT sensor
2. Main relay	5. A/C condenser fan relay No.1	8. A/C compressor relay	11. ECM
3. Radiator fan relay	6. A/C condenser fan relay No.2	9. A/C compressor	

CIRCUIT DESCRIPTION

Radiator fan relay is controlled by ECM if ECT is specified value.
When A/C condenser fan motor is running while head light is turned ON and engine is running at below 1500 r/min, radiator fan relay is turned OFF for 2 sec. by ECM.

DTC DETECTING CONDITION	TROUBLE AREA
• Monitor signal of radiator fan relay is different from command signal.	• "BLK/WHT", "BLK/RED" or "BRN" circuit open or short • Radiator fan relay malfunction • ECM malfunction

DTC CONFIRMATION PROCEDURE

1) Turn ignition switch turned OFF.
2) Clear DTC with ignition switch ON.
3) Warm up engine until radiator cooling fan starts to operate.
4) Check pending DTC in "ON BOARD TEST" or "PENDING DTC" mode and DTC in "DTC" mode.

TROUBLESHOOTING

Step	Action	Yes	No
1	Was “Engine and Emission Control System Check” performed?	Go to Step 2.	Go to “Engine and Emission Control System Check” in this section.
2	Check Relay Circuit 1) Disconnect radiator fan relay from relay/fuse box with ignition switch turned OFF. (See Fig. 1.) 2) Turn ignition switch to ON position. 3) Measure voltage between “BLK/RED” wire terminal of radiator fan relay connector and engine ground. Is voltage 10 – 14 V?	Go to Step 3.	“BLK/RED” wire in open or high resistance circuit.
3	Check Relay Circuit 1) Turn ignition switch to OFF position. 2) Install radiator fan relay to relay/fuse box. 3) Disconnect connectors from ECM. 4) Remove ECM from vehicle body and then connect connectors to ECM. 5) Turn ignition switch to ON position. 6) Measure voltage between “G91-4” wire terminal of ECM connector and vehicle body ground. Is voltage 10 – 14 V?	Go to Step 4.	Go to Step 6.
4	Check Relay Circuit 1) Turn ignition switch to OFF position. 2) Disconnect connectors from ECM. 3) Remove radiator fan relay from relay/fuse box. 4) Measure voltage between “G91-4” wire terminal of ECM connector and vehicle body ground with ignition switch turned ON. Is voltage 0 V?	Go to Step 5.	“BRN” wire shorted to power circuit.
5	Radiator Fan Control Signal Check 1) Disconnect negative (–) cable at battery. 2) Disconnect connector from ECT sensor. 3) Connect connectors to ECM. 4) Install radiator fan relay to relay/fuse box. 5) Connect negative (–) cable to battery. 6) Measure voltage between “G91-4” wire terminal of ECM connector and vehicle body ground with ignition switch turned ON. Is voltage about 0 V?	System is in good condition.	Substitute a known-good ECM and recheck.

Step	Action	Yes	No
6	Radiator Fan Control Signal Check 1) Turn ignition switch to OFF position. 2) Install radiator fan relay to relay/fuse box. 3) Disconnect connectors from ECM. 4) Measure voltage between “G91-4” wire terminal of ECM connector and vehicle body ground with ignition switch turned ON. Is voltage 10 – 14 V?	Substitute a known-good ECM and recheck.	Go to Step 7.
7	Check Relay Circuit 1) Turn ignition switch to OFF position. 2) Disconnect connectors from ECM. 3) Remove radiator fan relay from relay/fuse box. 4) Check for proper connection to “G91-4” wire terminal of ECM connector and “BRN” wire terminal of radiator fan relay connector. 5) If OK, measure resistance between “G91-4” wire terminal of ECM connector and “BRN” wire terminal of radiator fan relay connector. Is resistance 1 Ω or less?	Go to Step 8.	“BRN” wire in open or high resistance circuit.
8	Check Relay Circuit 1) Measure resistance between “G91-4” wire terminal of ECM connector and vehicle body ground. Is it infinite?	Go to Step 9.	“BRN” wire shorted to ground circuit.
9	Check Radiator Fan Relay 1) Check radiator fan relay referring to “Main relay, fuel pump relay and radiator fan relay inspection” in Section 6E1. Is it in good condition?	System is in good condition. Intermittent trouble. Check for intermittent referring to “Intermittent and Poor Connection” in Section 0A.	Replace radiator fan relay.

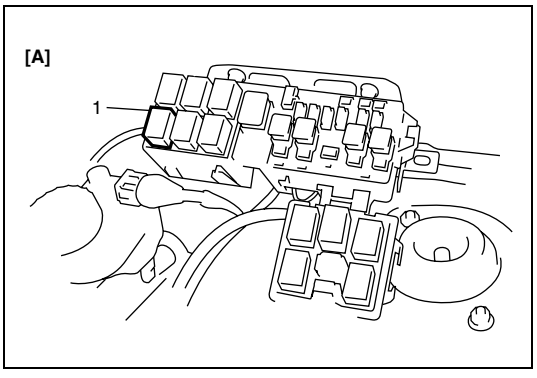

[A]: Fig. 1 for Step 2
1. Radiator fan relay

DTC P0481 Fan 2 (A/C Condenser Fan) Control Circuit

WIRING DIAGRAM

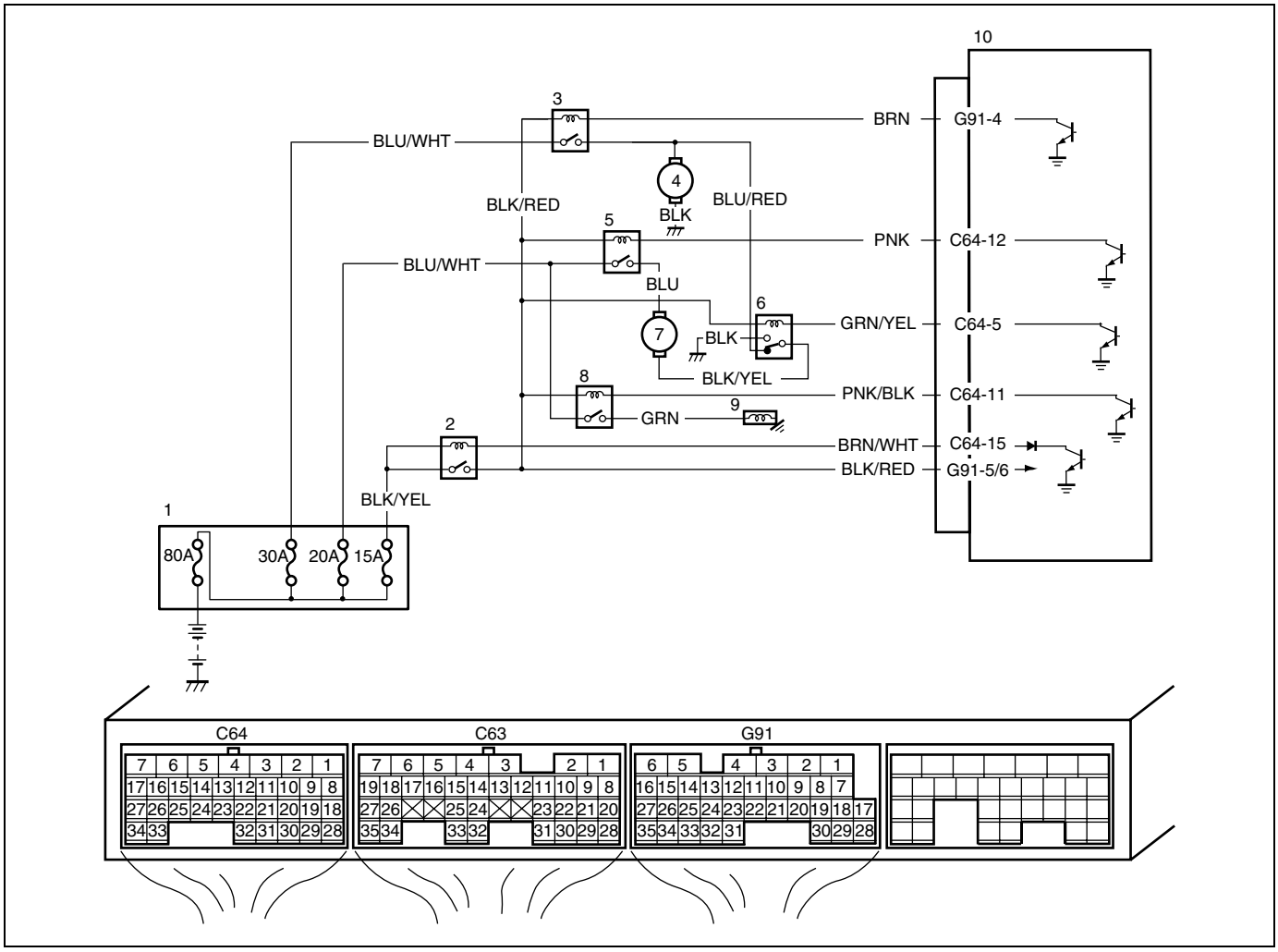

1. Relay/fuse box	4. Radiator fan motor	7. A/C condenser fan motor	10. ECM
2. Main relay	5. A/C condenser fan relay No.1	8. A/C compressor relay	
3. Radiator fan relay	6. A/C condenser fan relay No.2	9. A/C compressor	

CIRCUIT DESCRIPTION

A/C condenser fan motor is turned ON and OFF by its relay which ECM controls.
When A/C condenser fan motor starts is running while head light is turned ON and engine is running at below 1500 r/min, A/C condenser fan relay No.2 and radiator fan relay is turned OFF for 2 sec. by ECM.
Other than above condition, A/C condenser fan relay No.2 is leaving turned ON by ECM.

DTC DETECTING CONDITION AND TROUBLE AREA

DTC DETECTING CONDITION	TROUBLE AREA
• Monitor signal of A/C condenser fan relay is different from command signal.	• "PNK" or "BLU/WHT" circuit open or short • A/C condenser fan relay malfunction • ECM malfunction

DTC CONFIRMATION PROCEDURE

1) With ignition switch turned OFF, connect scan tool.
2) Turn ON ignition switch and clear DTC using scan tool.
3) Start engine and warm up engine to normal operating temperature.
4) Run engine at idle and turn both A/C switch and heater blower switch ON (turn ON air conditioning) for 3 min. or more.
5) Check DTC and pending DTC.

TROUBLESHOOTING

Step	Action	Yes	No
1	Was “Engine and Emission Control System Check” performed?	Go to Step 2.	Go to “Engine and Emission Control System Check” in this section.
2	Check Relay Circuit 1) Disconnect A/C condenser fan relay No.1 from relay/fuse box with ignition switch turned OFF. (See Fig. 1.) 2) Measure voltage between “BLK/RED” wire terminal of A/C condenser fan relay No.1 connector and engine ground with ignition switch turned ON. Is voltage 10 – 14 V?	Go to Step 3.	“BLK/RED” wire in open or high resistance circuit.
3	Check Relay Circuit 1) Disconnect A/C condenser fan relay No.2 from relay box with ignition switch turned OFF. (See Fig. 1.) 2) Measure voltage between “BLK/RED” wire terminal of A/C condenser fan relay No.2 connector and engine ground with ignition switch turned ON. Is voltage 10 – 14 V?	Go to Step 4.	“BLK/RED” wire in open or high resistance circuit.
4	Check Relay Circuit 1) Install A/C condenser fan relay No.1 and No.2 with ignition switch turned OFF. 2) Disconnect connectors from ECM. 3) Remove ECM from vehicle body and then connect connectors to ECM. 4) Measure voltage between each “C64-12” and “C64-5” wire terminal of ECM connector and vehicle body ground with ignition switch turned ON. Is each voltage 10 – 14 V?	Go to Step 5.	Go to Step 7.

Step	Action	Yes	No
5	Check Relay Circuit 1) Disconnect connectors from ECM with ignition switch turned OFF. 2) Remove A/C condenser fan relay No.1 and No.2. 3) Measure voltage between each “C64-12” and “C64-5” wire terminals of ECM connector and vehicle body ground with ignition switch turned ON. Is each voltage 0 V?	Go to Step 6.	“PNK” and “GRN/YEL” wire shorted to power circuit.
6	A/C Condenser Fan Control Signal Check 1) Connect connectors to ECM with ignition switch turned OFF. 2) Install A/C condenser fan relay No.1 and No.2. 3) Operate A/C system after an engine running. 4) Measure voltage between each “C64-12” and “C64-5” wire terminal of ECM connector and vehicle body ground. Is each voltage about 0 V?	System is in good condition.	Substitute a known-good ECM and recheck.
7	Check Relay Circuit 1) Disconnect connectors from ECM with ignition switch turned OFF. 2) Remove A/C condenser fan relay No.1 and No.2. 3) Check for proper connection to “C64-12” and “C64-5” wire terminals of ECM connector, “PNK” wire terminal of A/C condenser fan relay No.1 connector and “GRN/YEL” wire terminal of A/C condenser fan relay No.2 connector. 4) If OK, measure resistance between “C64-12” wire terminal of ECM connector and “PNK” wire terminal of A/C condenser fan relay No.1 connector and “C64-5” wire terminal of ECM connector and “GRN/YEL” wire terminal of A/C condenser fan relay No.2 connector. Is each resistance 1 Ω or less?	Go to Step 8.	“PNK” and “GRN/YEL” wire in open or high resistance circuit.
8	Check Relay Circuit 1) Measure resistance between each “C64-12” and “C64-5” wire terminals of ECM connector and vehicle body ground. Is each resistance infinite?	Go to Step 9.	“PNK” and “GRN/YEL” wire shorted to ground circuit.

Step	Action	Yes	No
9	Check A/C Condenser Fan Relay No.1 and No.2 1) Check A/C condenser fan relay No.1 and No.2 referring to “Condenser Cooling Fan Relay (No.1 and No.2) Inspection” in Section 1B. Is each relay in good condition?	Go to Step 10.	Replace A/C condenser fan relay No.1 or No.2.
10	A/C Condenser Fan Control Signal Check 1) Connect connectors to ECM. 2) Install A/C condenser fan relay No.1 and No.2. 3) Start engine. 4) Measure voltage between each “C64-12” and “C64-5” wire terminal of ECM connector and vehicle body ground. Is each voltage 10 – 14 V?	Intermittent trouble. Check for intermittent referring to “Intermittent and Poor Connection” in Section 0A.	Substitute a known-good ECM and recheck.

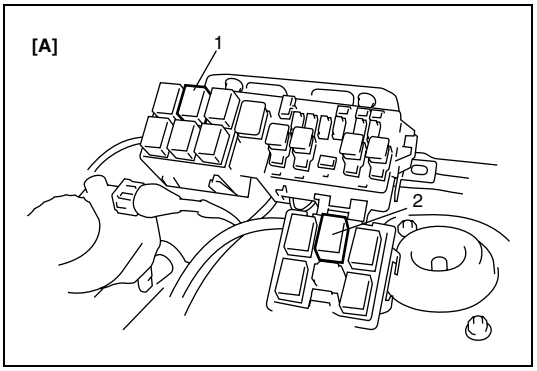

[A]: Fig. 1 for Step 2 and Step 3
1. A/C condenser fan relay No.1
2. A/C condenser fan relay No.2

DTC P0500 Vehicle Speed Sensor (VSS) Malfunction

WIRING DIAGRAM

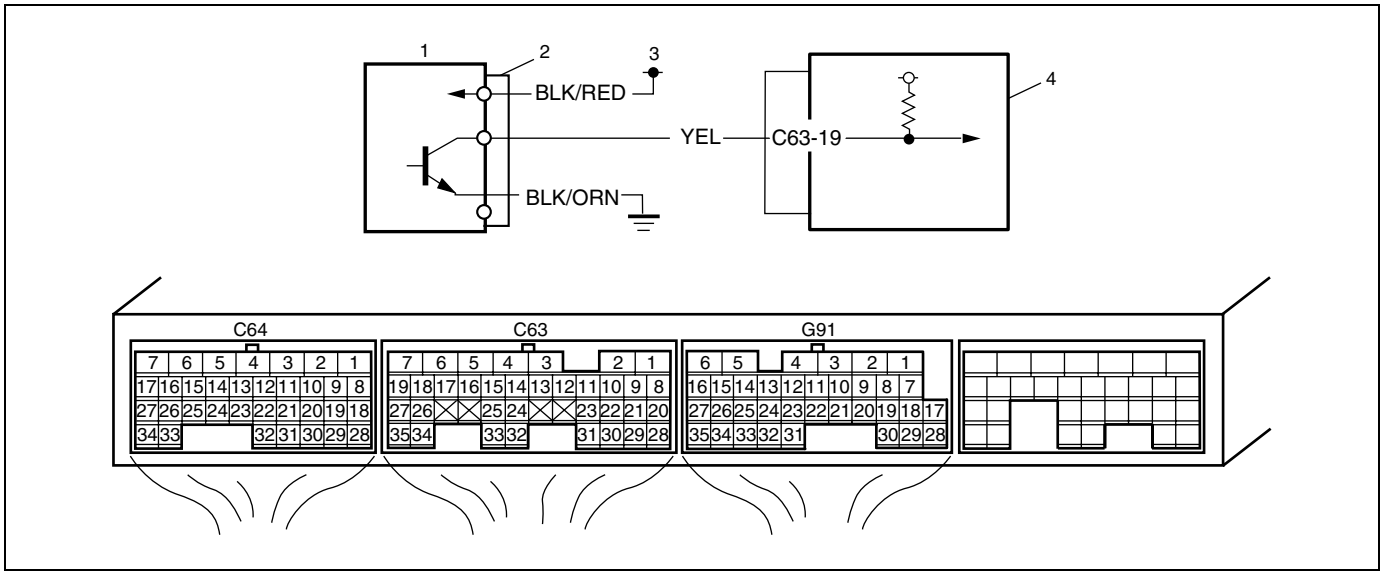

1. VSS	3. To main relay
2. VSS connector	4. ECM

DTC DETECTING CONDITION AND TROUBLE AREA

DTC DETECTING CONDITION	TROUBLE AREA
• Vehicle speed signal is not input while fuel cut at deceleration for 5 seconds continuously.	• "BLK/ORN" circuit open • "YEL" or "BLK/RED" circuit open or short • VSS malfunction • ECM malfunction

DTC CONFIRMATION PROCEDURE

WARNING:

- **When performing a road test, select a place where there is no traffic or possibility of a traffic accident and be very careful during testing to avoid occurrence of an accident.**
- **Road test should be carried out with 2 persons, a driver and a tester.**

1) With ignition switch turned OFF, connect scan tool.
2) Turn ON ignition switch and clear DTC using scan tool.
3) Warm up engine to normal operating temperature.
4) Increase vehicle speed to 50 mph, 80 km/h.
5) Release accelerator pedal and with engine brake applied, keep vehicle coasting for 6 sec. or more (fuel cut condition for 5 sec. or more) and stop vehicle.
6) Check pending DTC and DTC.

TROUBLESHOOTING

Step	Action	Yes	No
1	Was “Engine and Emission Control System Check” performed?	Go to Step 2.	Go to “Engine and Emission Control System Check”.
2	Check vehicle speed signal. Is vehicle speed displayed on scan tool in step 2) and 3) of DTC confirmation procedure?	Intermittent trouble or faulty ECM. Check for intermittent referring to “Intermittent and Poor Connection” in Section 0A.	Go to Step 3.
3	Check power supply circuit. 1) With OFF ignition switch turned, disconnect connector from VSS. 2) Check proper connection for “BLK/RED”, “BLK/ORN” and “YEL” wire terminal. 3) If wires are OK, turn ON ignition switch, measure voltage between engine ground and “BLK/RED” wire terminal. Is it voltage 10 – 14 V?	Go to Step 4.	“BLK/WHT” wire open circuit.
4	Check ground circuit. 1) Measure resistance between engine body ground and “BLK/ORN” wire terminal with ignition switch turn OFF. Is resistance below 5 Ω?	Go to Step 5.	“BLK/ORN” wire open or high resistance circuit.
5	Check wire circuit. 1) Turn ON ignition switch, measure voltage between engine ground and “YEL” wire terminal at VSS connector. See Fig. 1. Is it voltage 4 – 5 V?	Go to Step 9.	Go to Step 6.
6	Check ECM voltage. 1) Turn ON ignition switch, measure voltage between vehicle body ground and “C63-19” terminal at ECM connector. Is it voltage 4 – 5 V?	“YEL” wire open circuit.	Go to Step 7.
7	Check short circuit. 1) Disconnect connectors from ECM with ignition switch turned OFF. 2) Turn ON ignition switch, measure voltage between engine ground and “C63-19” terminal. Is it voltage 0 V?	Go to Step 8.	“YEL” wire shorted to power supply circuit.
8	Check short circuit. 1) Measure resistance between engine ground and “C63-19” terminal with ignition switch turned OFF. Is resistance infinity?	Go to Step 9.	“YEL” wire shorted to ground circuit. If wire are OK, substitute a known-good ECM and recheck.

Step	Action	Yes	No
9	Check signal rotor. 1) Remove VSS referring to “Vehicle Speed Sensor (VSS) Removal and Installation” in Section 7A. 2) Visually inspect VSS sensor signal rotor for damage. Was any damage found?	Faulty VSS signal rotor.	Substitute a known-good VSS and recheck.

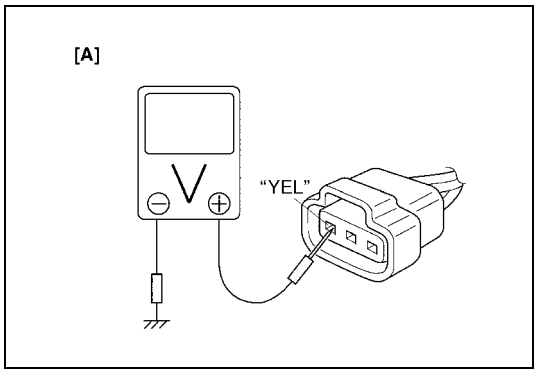

[A]: Fig. 1 for Step 5

DTC P0505 Idle Air Control System

SYSTEM/WIRING DIAGRAM

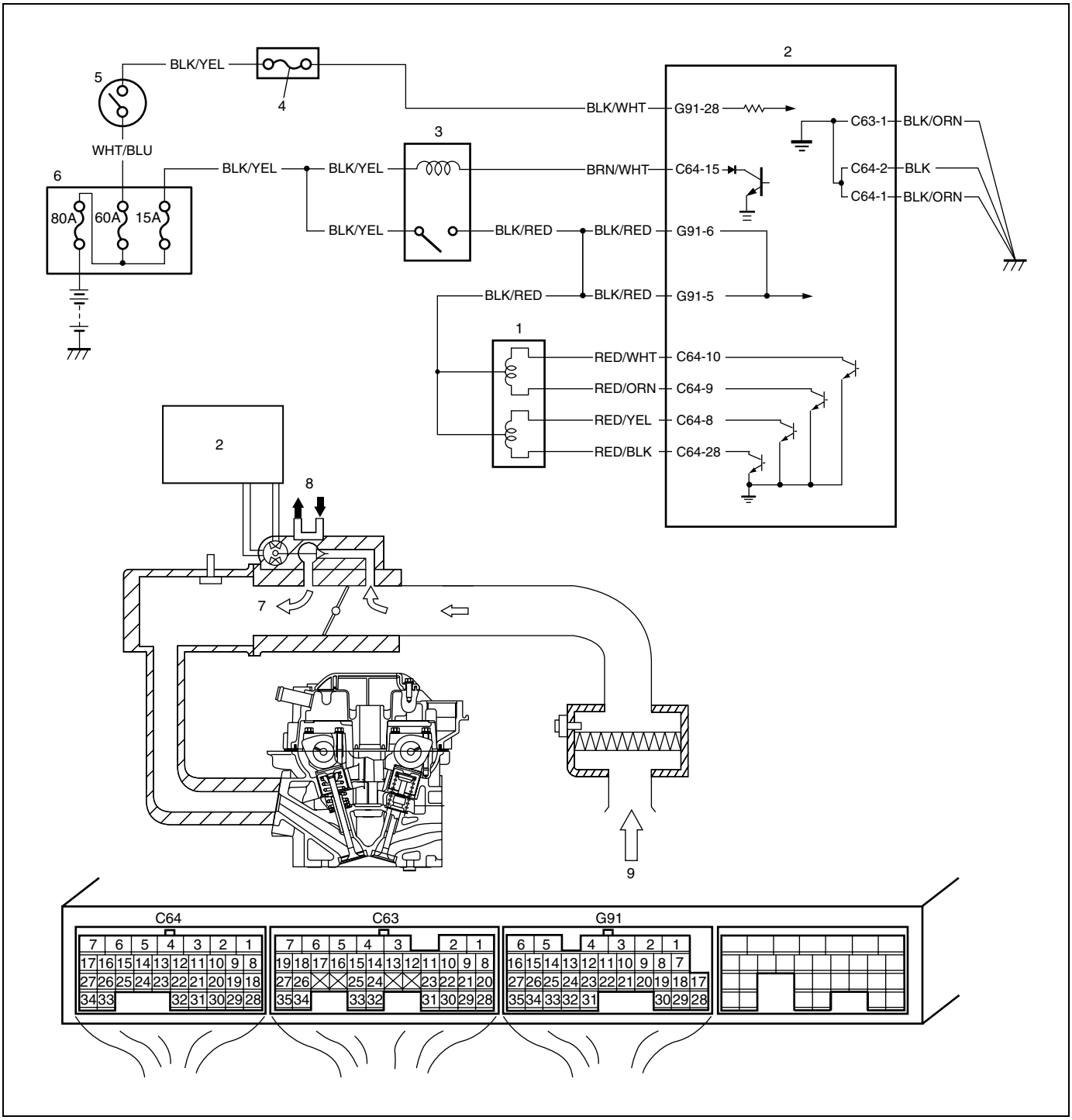

1. IAC valve	4. "IG" fuse	7. Bypass air
2. ECM	5. Ignition switch	8. Engine coolant
3. Main relay	6. Relay/fuse box	9. Intake air

DTC DETECTING CONDITION AND TROUBLE AREA (DTC P0505)

DTC DETECTING CONDITION	TROUBLE AREA
• IAC valve signal voltage is out of specification for about 2 sec. or more. • Engine revolution keeps excessively high for engine idling (1 driving cycle detection logic)	• Idle air control valve or its circuit • ECM • Intake air leakage

DTC CONFIRMATION PROCEDURE

NOTE:

Check to make sure that the following conditions are satisfied when using this DTC CONFIRMATION PROCEDURE.

Electric load (lighting, heater blower, rear defogger, etc.) and A/C are turned OFF.

1) With ignition switch turned OFF, connect scan tool.
2) Turn ON ignition switch and clear DTC using scan tool.
3) Start engine and warm up to normal operating temperature (80°C – 110°C, 176°F – 230°F).
4) Run engine at idle speed (600 – 1000 r/min.) for 1 min. or more.
5) Check DTC and pending DTC.

TROUBLESHOOTING

Step	Action	Yes	No
1	Was “Engine and Emission Control System Check” performed?	Go to Step 2.	Go to “Engine and Emission Control System Check” in this section.
2	Idle Speed Check 1) Check idle speed/idle air control duty referring to “Idle speed/idle air control (IAC) duty inspection” in Section 6E1. Is check result as specified?	Go to Step 3.	Go to Step 4.
3	Idle Air Control Valve Operation Check 1) Check idle air control valve for operation referring to “Idle air control (IAC) valve operation check” in this section. Is check result satisfactory?	Intermittent trouble. Check for intermittent referring to “Intermittent and Poor Connection” in Section 0A. If OK, substitute a known-good ECM and recheck.	Go to Step 4.
4	Idle Air Control Valve Circuit Check 1) Disconnect connector from idle air control valve with ignition switch turned OFF. 2) Turn ON ignition switch, measure voltage between “BLK/RED” wire terminals of idle air control valve connector and engine ground. Is voltage 10 – 14 V?	Go to Step 5.	“BLK/RED” wire in open or high resistance circuit.
5	Idle Air Control Valve Check 1) Check idle air control valve for resistance referring to “Idle air control (IAC) valve check” in this section. Is check result satisfactory?	Go to Step 6.	Replace idle air control valve.

Step	Action	Yes	No
6	Idle Air Control Valve Circuit Check 1) Disconnect connectors from ECM with ignition switch turned OFF. 2) Measure resistance between “RED/WHT” wire terminal of idle air control valve connector and “C64-10” wire terminal of ECM connector, “RED/ORN” wire terminal of idle air control valve connector and “C64-9” wire terminal of ECM connector, “RED/YEL” wire terminal of idle air control valve connector and “C64-8” wire terminal of ECM connector, “RED/BLK” wire terminal of idle air control valve connector and “C64-28” wire terminal of ECM connector. Are resistance 1 Ω or less?	Go to Step 7.	“RED/WHT”, “RED/ORN”, “RED/YEL” or “RED/BLK” wire in open or high resistance circuit.
7	Idle Air Control Valve Circuit Check 1) Measure resistance between each “C64-10”, “C64-9”, “C64-8” and “C64-28” wire terminals of ECM connector and vehicle body ground. Is each resistance infinite?	Go to Step 8.	“RED/WHT”, “RED/ORN”, “RED/YEL” or “RED/BLK” wire in shorted to ground circuit.
8	Idle Air Control Valve Circuit Check 1) Connect connectors to ECM. 2) Turn ON ignition switch, measure voltage between each “C64-10”, “C64-9”, “C64-8” and “C64-28” wire terminals of ECM connector and vehicle body ground. Is each voltage 0 V?	Go to Step 9.	“RED/WHT”, “RED/ORN”, “RED/YEL” or “RED/BLK” wire in shorted to power circuit.
9	ECM Voltage Check 1) Connect connector to idle air control valve with ignition switch turned OFF. 2) Turn ON ignition switch, measure voltage between each “C64-10”, “C64-9”, “C64-8” and “C64-28” wire terminals of ECM connector and vehicle body ground. • “C64-8” and “C64-10” wire terminals: 0 – 1 V • “C64-9” and “C64-28” wire terminals: 10 – 14 V Are check results satisfactory?	Go to Step 10.	Substitute a known-good ECM and recheck.
10	Make sure if the following conditions are satisfied. • The throttle valve is fully closed. • The air cleaner element is installed properly. Is it in good condition?	Replace idle air control valve.	Repair or replace.

DTC P0506 Idle Air Control System RPM Lower than Expected
DTC P0507 Idle Air Control System RRM Higher than Expected

SYSTEM/WIRING DIAGRAM

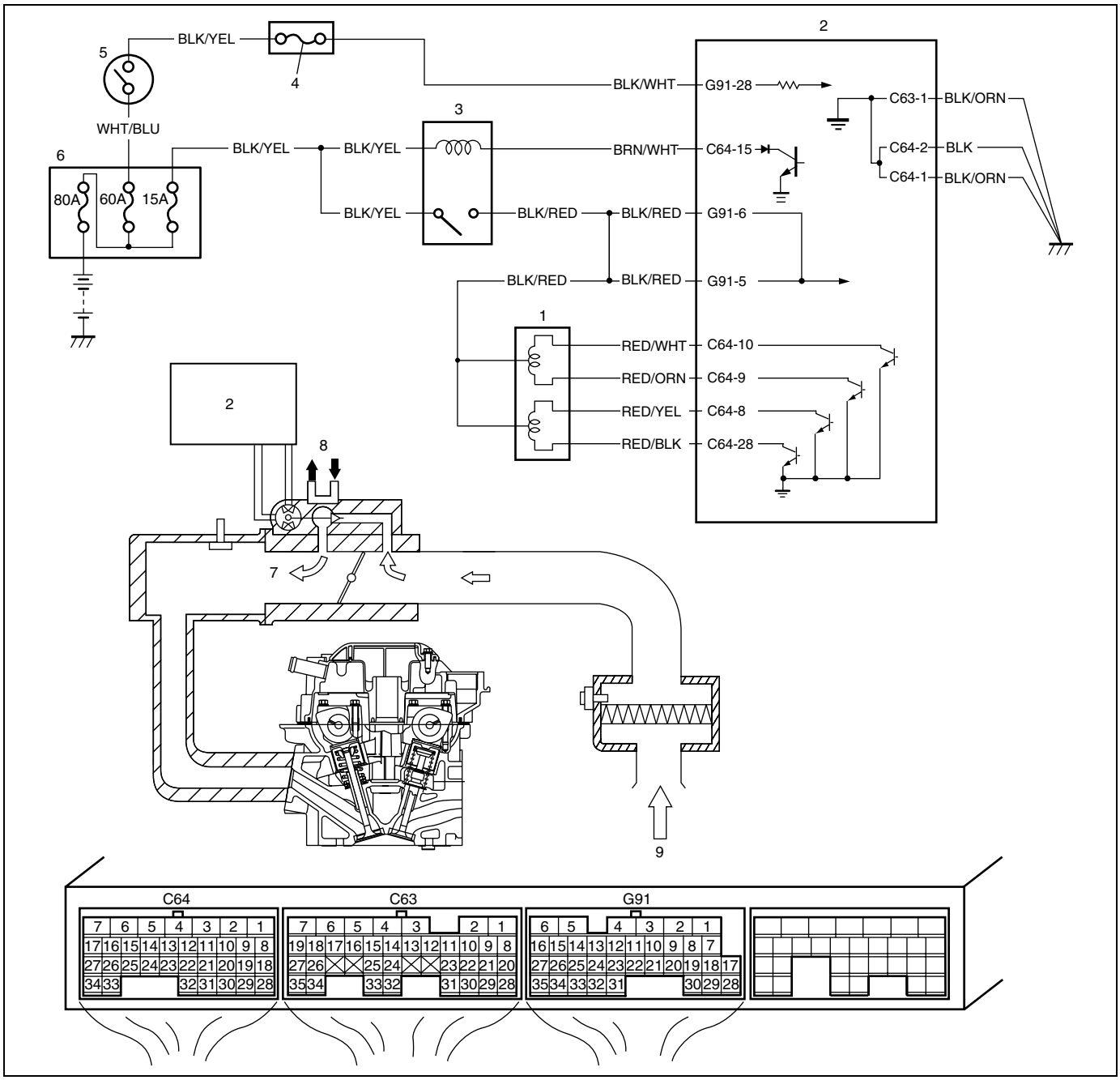

1. IAC valve	3. Main relay	5. Ignition switch	7. Bypass air	9. Intake air
2. ECM	4. "IG" fuse	6. Relay/fuse box	8. Engine coolant	

DTC DETECTING CONDITION AND TROUBLE AREA (DTC P0506/P0507)

DTC DETECTING CONDITION	TROUBLE AREA
DTC P0506: Engine idle speed is 100 r/min. or more lower than target idle speed for 20 sec. continuously when vehicle stops and closed throttle position (ON). DTC P0507: Engine idle speed is 200 r/min. or more higher than target idle speed for 20 sec. continuously when vehicle stops and closed throttle position (ON). (2 driving cycle detection logic)	• Idle air control valve or its circuit • Air intake system (clog or leakage) • Engine mechanical • Accessory engine load • ECM • Vehicle speed sensor

DTC CONFIRMATION PROCEDURE

NOTE:

Check to make sure that the following conditions are satisfied when using this DTC CONFIRMATION PROCEDURE.

- **Intake air temperature: –7°C (19.4°F) or higher**
- **Engine coolant temperature: –7°C (19.4°F) or higher**
- **Altitude (barometric pressure): 2400 m, 8000 ft or less (560 mmHg, 75 kPa or more)**
- **Transmission gear shift lever is shifted in "Neutral" for M/T**
- **Electric load (lighting, heater blower, rear defogger, etc.) and A/C are turned OFF.**

1) With ignition switch turned OFF, connect scan tool.
2) Turn ON ignition switch and clear DTC using scan tool.
3) Start engine and warm up to normal operating temperature (80°C – 110°C, 176°F – 230°F).
4) Run engine at idle speed (600 – 1000 r/min.) for 1 min. or more.
5) Check DTC and pending DTC.

TROUBLESHOOTING

Step	Action	Yes	No
1	Was "Engine and Emission Control System Check" performed?	Go to Step 2.	Go to "Engine and Emission Control System Check" in this section.
2	DTC Check Is DTC P0505 displayed?	Go to "DTC P0505 Idle Air Control System" in this section.	Go to Step 3.
3	Idle Speed Check 1) Check idle speed/idle air control duty referring to "Idle speed/idle air control (IAC) duty inspection" in Section 6E1. Is check result as specified?	Go to Step 4.	Go to Step 5.
4	Vehicle Speed Sensor Signal Check Is vehicle speed displayed on scan tool when driving vehicle?	Intermittent trouble. Check for intermittent referring to "Intermittent and Poor Connection" in Section 0A. If OK, substitute a known-good ECM and recheck.	Go to "DTC P0500 Vehicle Speed Sensor (VSS) Malfunction" in this section.

Step	Action	Yes	No
5	Air Intake System Check 1) Check air intake system for clog and inhaling. Is check result satisfactory?	Go to Step 6.	Repair or replace.
6	Idle Air Control Valve Operation Check 1) Check idle air control valve for operation referring to “Idle air control (IAC) valve operation check” in this section. Is check result satisfactory?	Go to Step 9.	Go to Step 7.
7	Idle Air Control Valve Circuit Check 1) Disconnect connector from idle air control valve with ignition switch turned OFF. 2) Turn ON ignition switch, measure voltage between “BLK/RED” wire terminals of idle air control valve connector and engine ground. Is voltage 10 – 14 V?	Go to Step 8.	“BLK/RED” wire in open or high resistance circuit.
8	Idle Air Control Valve Check 1) Check idle air control valve for resistance referring to “Idle air control (IAC) valve check” in this section. Is check result satisfactory?	Go to Step 9.	Replace idle air control valve.
9	Idle Air Control System Check 1) Check parts or system which can cause engine low or high idle. • EGR valve malfunction (leakage) • EVAP system malfunction • Accessory engine load • Engine mechanical (engine compression) • Throttle body malfunction • PCV system malfunction • Accelerator cable (get stuck on) • Brake booster malfunction Are they in good condition?	Substitute a known-good ECM and recheck.	Repair or replace.

Idle air control (IAC) valve operation check

USING SUZUKI SCAN TOOL

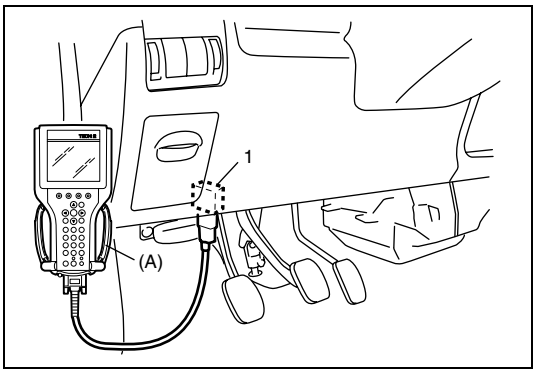

1) Connect Suzuki Scan Tool to DLC (1) with ignition switch OFF.

Special tool
(A): Suzuki Scan Tool

2) Warm up engine to normal operating temperature.
3) Clear DTC and select "MISC TEST" mode on Suzuki Scan Tool.
4) Check that idle speed increases and/or reduces when IAC valve is opened and/or when closed by Suzuki Scan Tool.
   If idle speed does not change, check IAC valve and wire harness.

NOT USING SUZUKI SCAN TOOL

1) Warm up engine to normal operating temperature.
2) Stop engine.
3) Turn ignition switch to ON position.
4) Disconnect IAC valve connector.
5) Start engine.
6) Connect IAC valve connector.
7) Check that idle speed increases and/or reduces when connector is connected to IAC valve.
   If idle speed does not change, check IAC valve and wire harness.

Idle air control (IAC) valve check

1) Disconnect negative cable at battery.
2) Disconnect connector from IAC valve.
3) Check for proper connection to IAC valve at each terminal.

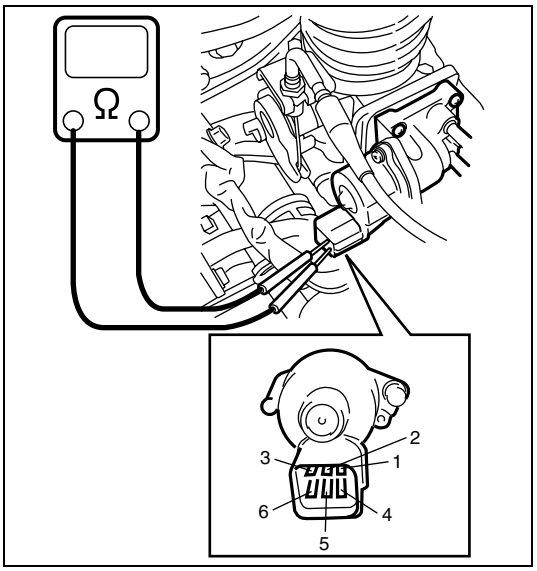

4) Check each coil of IAC valve for resistance.
   If resistance is out of specification, replace IAC valve.

IAC valve resistance specification

Terminals	Resistance
Between "1" and "2"	25.5 – 33.5 Ω (at 20°C, 68°F)
Between "3" and "2"	
Between "4" and "5"	
Between "6" and "5"	

5) Connect connector to IAC valve.
6) Remove IAC valve form throttle body referring to "Idle air control (IAC) valve removal and installation" in Section 6E1.

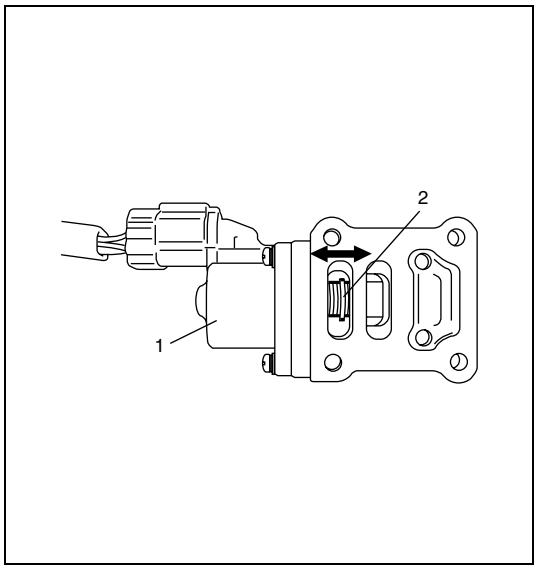

7) Check that valve (2) of IAC valve (1) opens and closes once and then stops in about 60 ms as soon as ignition switch is turned ON.

NOTE:

- **This check should be performed by two people, one person turns on ignition switch while the other checks valve operation.**
- **As valve operation is momentary, it may be overlooked. To prevent this operation check 3 times or more continuously.**
  If valve of IAC valve does not operate at all, check wire harness for open and short. If wire harness is in good condition, replace IAC valve and recheck.

8) Install IAC valve to throttle body referring to “Idle air control (IAC) valve removal and installation” in Section 6E1.
9) Connect negative cable at battery.

DTC P0616 Starter Relay Circuit Low

WIRING DIAGRAM

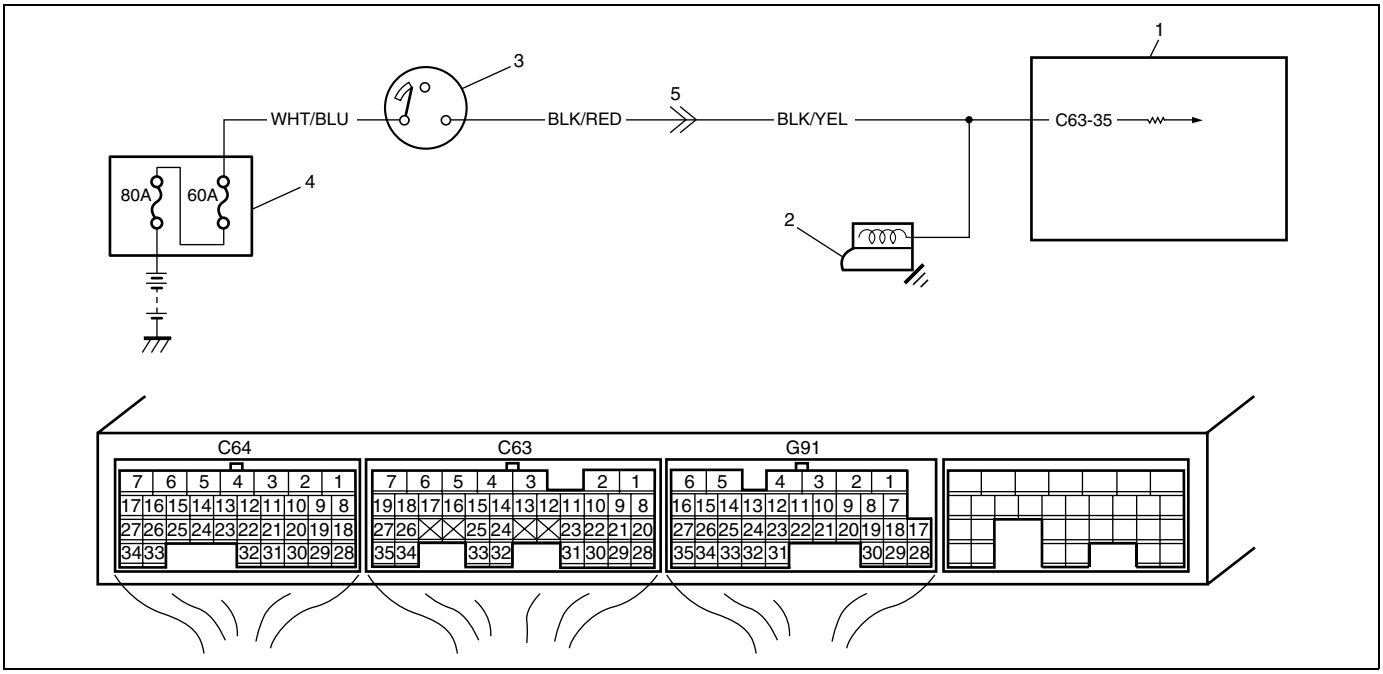

1. ECM	3. Ignition switch	5. Instrument panel harness/engine harness connector
2. Starter motor	4. Relay/fuse box	

DTC DETECTING CONDITION	TROUBLE AREA
Engine starts even though vehicle is at stop and engine starter signal is low voltage. (2 driving cycle detection logic)	• Engine starter signal circuit • ECM

DTC CONFIRMATION PROCEDURE

1) With ignition switch turned OFF, connect scan tool.
2) Turn ON ignition switch and clear DTC using scan tool.
3) Start engine.
4) Check DTC and pending DTC.

TROUBLESHOOTING

Step	Action	Yes	No
1	Was “Engine and Emission Control System Check” performed?	Go to Step 2.	Go to “Engine and Emission Control System Check”.
2	Signal circuit check 1) Disconnect connectors from ECM with ignition switch turned OFF. 2) Remove ECM from vehicle body and then connect connectors to ECM. 3) Check for voltage at terminal “C63-35”, under the following condition. While engine cranking: 6 – 14 V After starting engine: 0 – 1 V Is voltage as specified?	Poor “C63-35” connection or intermittent trouble. Check for intermittent referring to “Intermittent and Poor Connection” in Section 0A. If wire and connections are OK, substitute a known-good ECM and recheck.	“BLK/YEL” wire or “BLK/RED” wire circuit open.

DTC P0617 Starter Relay Circuit High

WIRING DIAGRAM

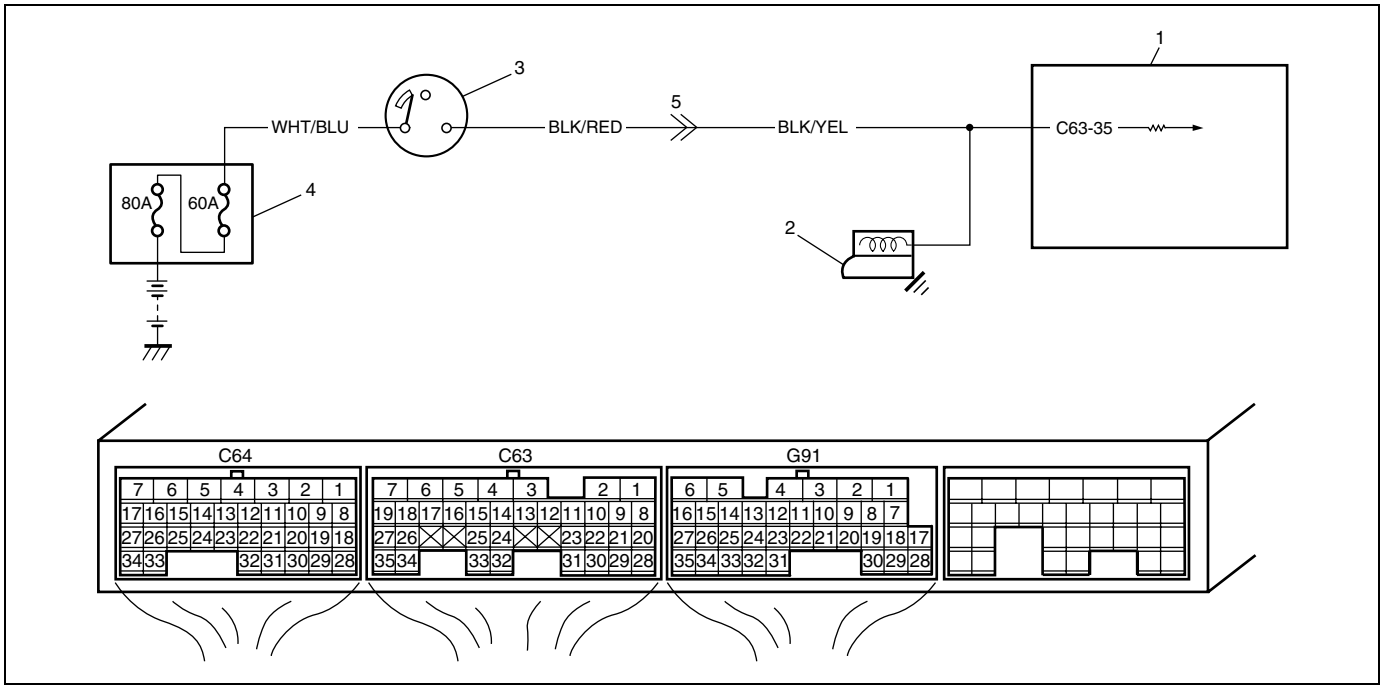

1. ECM	4. Relay/fuse box
2. Starter motor	5. Instrument panel harness/engine harness connector
3. Ignition switch	

DTC DETECTING CONDITION	TROUBLE AREA
Engine starter signal is high voltage for 180 seconds continuously while engine is running. (2 driving cycle detection logic)	• Engine starter signal circuit • ECM

DTC CONFIRMATION PROCEDURE

1) With ignition switch turned OFF, connect scan tool.
2) Turn ON ignition switch and clear DTC using scan tool.
3) Start engine and run it at idle for 3 min. or more.
4) Check DTC and pending DTC.

TROUBLESHOOTING

Step	Action	Yes	No
1	Was “Engine and Emission Control System Check” performed?	Go to Step 2.	Go to “Engine and Emission Control System Check” in this section.
2	Starter Signal Check 1) Disconnect connectors from ECM with ignition switch turned OFF. 2) Remove ECM from vehicle body and then connect connectors to ECM. 3) Start engine, check voltage between “C63-35” wire terminal of ECM connector and vehicle body ground. Is voltage 0 – 1 V?	Intermittent trouble. Check for intermittent referring to “Intermittent and Poor Connection” in Section 0A. If OK, substitute a known-good ECM and recheck.	Go to Step 3.

Step	Action	Yes	No
3	Starter Signal Circuit Check 1) Disconnect connectors from ECM with ignition switch turned OFF. 2) Turn ON ignition switch, check voltage between “C63-35” wire terminal of ECM connector and vehicle body ground. Is voltage 0 – 1 V?	Substitute a known-good ECM and recheck.	Go to Step 4.
4	Starter Signal Circuit Check 1) Disconnect instrument panel harness/engine harness connector. (See Fig. 1) 2) Turn ON ignition switch, measure voltage between “BLK/RED” wire terminal of instrument panel harness/engine harness connector and vehicle body ground. Is voltage 0 – 1 V?	“BLK/YEL” wire shorted to power circuit.	Go to Step 5.
5	Ignition Switch Inspection 1) Check ignition switch referring to “Ignition (Main) Switch ON-Vehicle Inspection” in Section 8C. Is it in good condition?	“BLK/RED” wire shorted to power circuit.	Replace ignition switch.

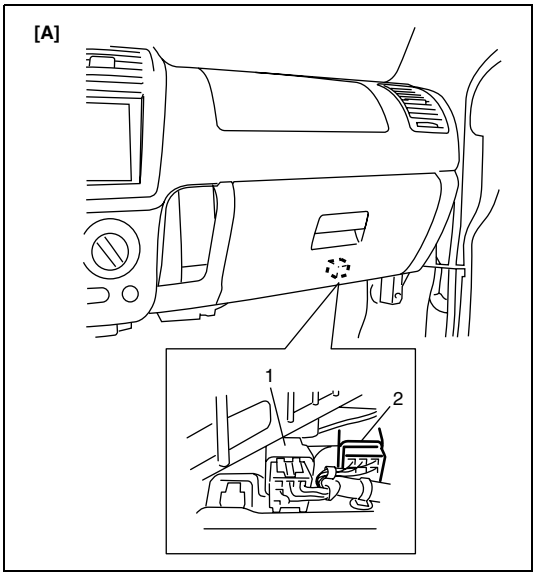

[A]: Fig. 1 for Step 4
1. Front wiper intermittent timer
2. Instrument panel harness/engine harness connector

DTC P0107 Manifold Absolute Pressure Low Input

WIRING DIAGRAM

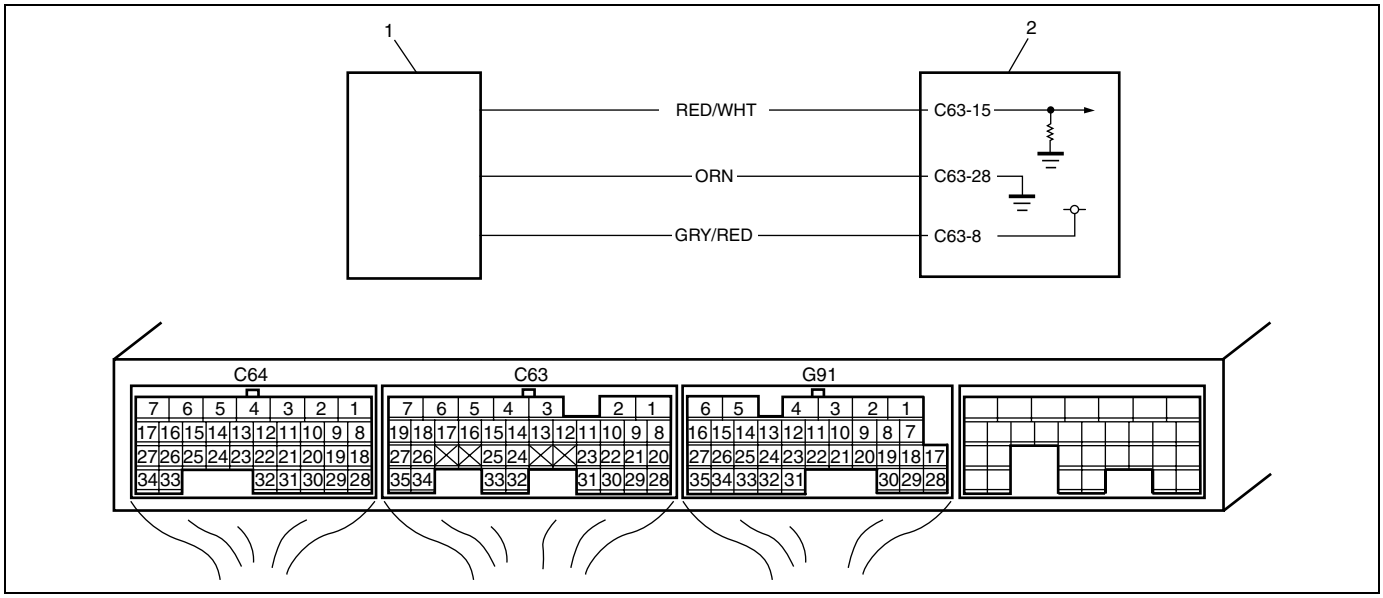

1. Manifold absolute pressure sensor	2. ECM

DTC DETECTING CONDITION AND TROUBLE AREA

DTC DETECTING CONDITION	TROUBLE AREA
• Manifold absolute pressure sensor output voltage is lower than 0.2 V for 5 sec. continuously. (2 driving cycle detection logic)	• Manifold absolute pressure sensor circuit • Manifold absolute pressure sensor • Manifold absolute pressure sensor vacuum passage • ECM

DTC CONFIRMATION PROCEDURE

WARNING:
- **When performing a road test, select a place where there is no traffic or possibility of a traffic accident and be very careful during testing to avoid occurrence of an accident.**
- **Road test should be carried out with 2 persons, a driver and a tester, on a level road.**

NOTE:

Check to make sure that the following conditions are satisfied when using this DTC CONFIRMATION PROCEDURE.
- **Intake air temperature: –7°C (19.4°F) or higher**
- **Engine coolant temperature: –7°C (19.4°F) or higher**
- **Altitude (barometric pressure): 2400 m, 8000 ft or less (560 mmHg, 75 kPa or more)**

1) Connect scan tool to DLC with ignition switch OFF.
2) Turn ON ignition switch and clear DTC using scan tool and warm up engine completely.
3) Drive the vehicle with the speed of 40 km/h (25 mile/h) in the 5th gear or D range, and then accelerate the vehicle for more than 5 seconds by stepping only half of the accelerator pedal.
4) Check DTC and pending DTC.

TROUBLESHOOTING

Step	Action	Yes	No
1	Was “Engine and Emission Control System Check” performed?	Go to Step 2.	Go to “Engine and Emission Control System Check”.
2	Check MAP sensor and its circuit. 1) Connect scan tool to DLC with ignition switch turned OFF. 2) Turn ignition switch ON. 3) Check intake manifold pressure. Is it 146 kPa (43.1 in.Hg) or 0 kPa (0 in.Hg)?	Go to Step 3.	Intermittent trouble. Check for intermittent referring to “Intermittent and Poor Connection” in Section 0A. If OK, go to Step 9.
3	Check MAP sensor power supply voltage. 1) Disconnect connector from MAP sensor with ignition switch tuned OFF. 2) Check for proper connection of MAP sensor at “GRY/RED”, “ORN” and “RED/WHT”. 3) Turn ON ignition switch, measure voltage between engine ground and “GRY/RED” wire terminal. See Fig. 1. Is voltage 4 – 5 V?	Go to Step 6.	Go to Step 4.
4	Check MAP sensor power supply voltage. 1) Disconnect connectors from ECM with ignition switch turned OFF. 2) Remove ECM from vehicle body and then connect connectors to ECM. 3) Turn ON ignition switch, measure voltage between vehicle body ground and “C63-8” terminal. Is voltage 4 – 5 V?	“GRY/RED” wire in open circuit.	Go to Step 5.
5	Check MAP sensor power supply circuit. 1) Disconnect connectors from TP sensor with ignition switch turned OFF. 2) Turn ON ignition switch, measure voltage between vehicle body ground and “C63-8” terminal. Is voltage 4 – 5 V?	Faulty TP sensor.	“GRY/RED” wire shorted to ground or other circuit. If wires are OK, substitute a known-good ECM and recheck.
6	Check MAP sensor ground circuit. 1) Measure resistance between “ORN” wire terminal in MAP sensor harness connector and engine ground. Is resistance below 5Ω?	Go to Step 8.	Go to Step 7.
7	Check ground circuit. 1) Disconnect connectors from ECM with ignition switch turned OFF. 2) Remove ECM from vehicle body and connect connectors to ECM. 3) Measure resistance between “C63-28” terminal and vehicle body ground. Is resistance below 5Ω?	“ORN” wire in open or high resistance circuit.	ECM grounds “C63-28” and/or “C64-2” circuit in open or high resistance. If wires are OK, substitute a known-good ECM and recheck.

Step	Action	Yes	No
8	Check MAP sensor signal circuit. 1) Turn ON ignition switch. 2) Measure voltage between “RED/WHT” wire terminal in MAP sensor harness connector and engine ground. Is voltage 0 V?	Go to Step 9.	“RED/WHT” wire shorted to other circuit.
9	Check MAP sensor signal circuit. 1) Disconnect connectors from ECM with ignition switch turned OFF. 2) Measure resistance between “C63-15” terminal and vehicle body ground. Is resistance infinity?	Go to Step 10.	“RED/WHT” wire shorted to ground circuit.
10	Check MAP sensor signal circuit. 1) Measure resistance between “RED/WHT” wire terminal in MAP sensor harness connector and “C63-15” terminal in ECM connector. Is resistance below 5 Ω?	Go to Step 11.	“RED/WHT” wire in open or high resistance circuit.
11	Check MAP sensor output signal. 1) Check MAP sensor according to “MAP Sensor Individual Check” in this section. Is it in good condition?	Substitute a known-good ECM and recheck.	Faulty MAP sensor.

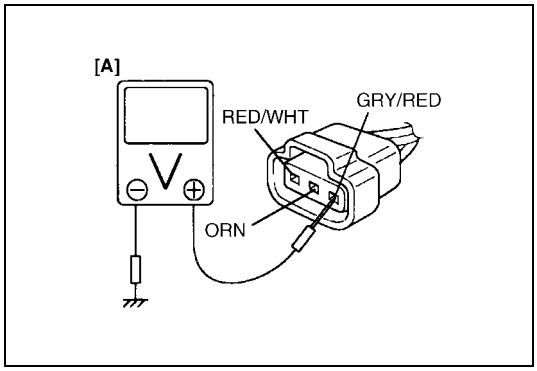

[A]: Fig. 1 for Step 3

DTC P0108 Manifold Absolute Pressure High Input

WIRING DIAGRAM

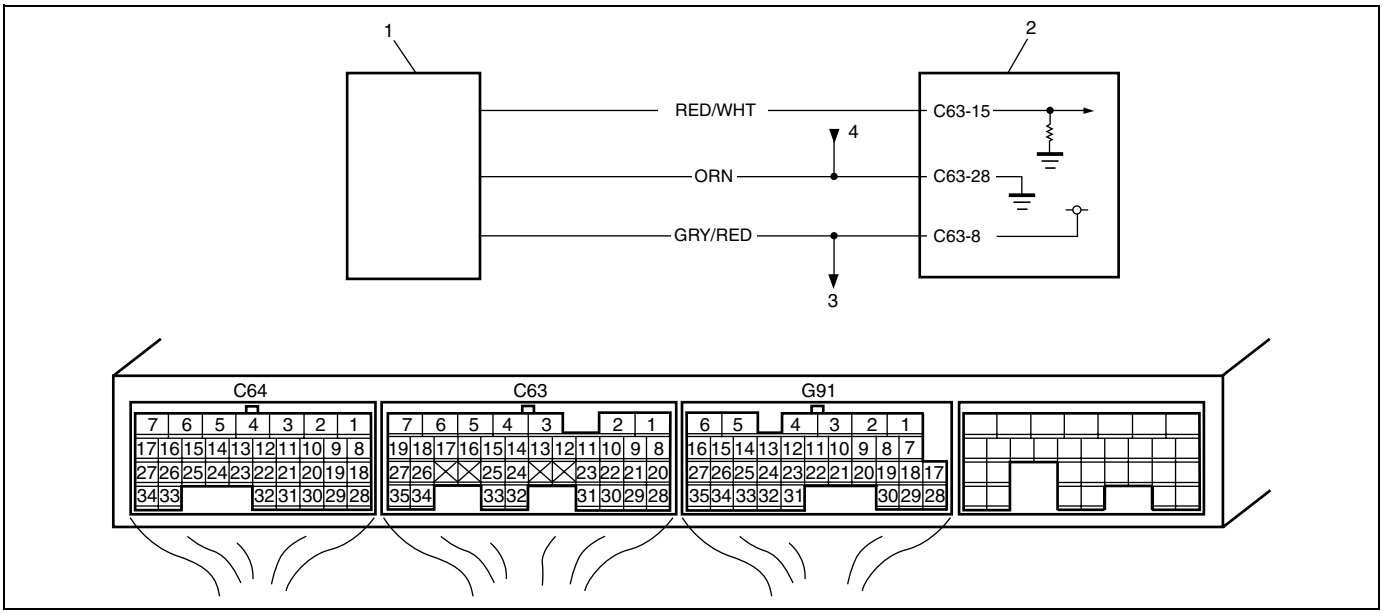

1. Manifold absolute pressure sensor	3. To TP sensor
2. ECM	4. From other sensors

DTC DETECTING CONDITION AND TROUBLE AREA

DTC DETECTING CONDITION	TROUBLE AREA
• Manifold absolute pressure sensor output voltage is 4.6 V or higher for 24 sec. continuously. (2 driving cycle detection logic)	• Manifold absolute pressure sensor circuit • Manifold absolute pressure sensor • Manifold absolute pressure sensor vacuum passage • ECM

DTC CONFIRMATION PROCEDURE

WARNING:
- **When performing a road test, select a place where there is no traffic or possibility of a traffic accident and be very careful during testing to avoid occurrence of an accident.**
- **Road test should be carried out with 2 persons, a driver and a tester, on a level road.**

NOTE:

Check to make sure that the following conditions are satisfied when using this DTC CONFIRMATION PROCEDURE.
- **Intake air temperature: –7°C (19.4°F) or higher**
- **Engine coolant temperature: –7°C (19.4°F) or higher**
- **Altitude (barometric pressure): 2400 m, 8000 ft or less (560 mmHg, 75 kPa or more)**

1) Connect scan tool to DLC with ignition switch turned OFF.
2) Turn ON ignition switch and clear DTC using scan tool and warm up engine completely.
3) Run engine at idle speed for 1 min.
4) Check DTC and pending DTC.

TROUBLESHOOTING

Step	Action	Yes	No
1	Was “Engine and Emission Control System Check” performed?	Go to Step 2.	Go to “Engine and Emission Control System Check”.
2	Check MAP sensor and its circuit. 1) Connect scan tool to DLC with ignition switch OFF. 2) Turn ignition switch ON. 3) Check intake manifold pressure. Is it 146 kPa (43.1 in.Hg) or 0 kPa (0 in.Hg)?	Go to Step 3.	Intermittent trouble. Check for intermittent referring to “Intermittent and Poor Connection” in Section 0A. If OK, go to Step 8.
3	Check MAP sensor power supply voltage. 1) Disconnect connector from MAP sensor with ignition switch tuned OFF. 2) Check for proper connection of MAP sensor at “GRY/RED”, “ORN” and “RED/WHT”. 3) Turn ON ignition switch, measure voltage between engine ground and “GRY/RED” wire terminal. See Fig. 1. Is voltage 4 – 5 V?	Go to Step 5.	Go to Step 4.
4	Check MAP sensor power supply voltage. 1) Disconnect connectors from ECM with ignition switch turned OFF. 2) Remove ECM from vehicle body and then connect connectors to ECM. 3) Turn ON ignition switch, measure voltage between vehicle body ground and “C63-8” terminal. Is voltage 4 – 5 V?	“GRY/RED” wire in open circuit.	“GRY/RED” wire shorted to other circuit. If wires are OK, substitute a known-good ECM and recheck.
5	Check MAP sensor ground circuit. 1) Measure resistance between “ORN” wire terminal in MAP sensor harness connector and engine ground. Is resistance below 5 Ω?	Go to Step 7.	Go to Step 6.
6	Check ground circuit. 1) Disconnect connectors from ECM with ignition switch turned OFF. 2) Remove ECM from vehicle body and connect connectors to ECM. 3) Measure resistance between “C63-28” terminal and vehicle body ground. Is resistance below 5 Ω?	“ORN” wire in open or high resistance circuit.	ECM grounds “C63-28” and/or “C64-2” circuit in open or high resistance. If wires are OK, substitute a known-good ECM and recheck.
7	Check MAP sensor signal circuit. 1) Disconnect connectors from ECM with ignition switch turn OFF. 2) Turn ON ignition switch. 3) Measure voltage between “RED/WHT” wire terminal in MAP sensor harness connector and engine ground. Is voltage 0 V?	Go to Step 8.	“RED/WHT” wire shorted to power supply or other circuit.

Step	Action	Yes	No
8	Check MAP sensor output signal. 1) Check MAP sensor according to “MAP Sensor Individual Check” in this section. Is it in good condition?	Substitute a known-good ECM and recheck.	Faulty MAP sensor.

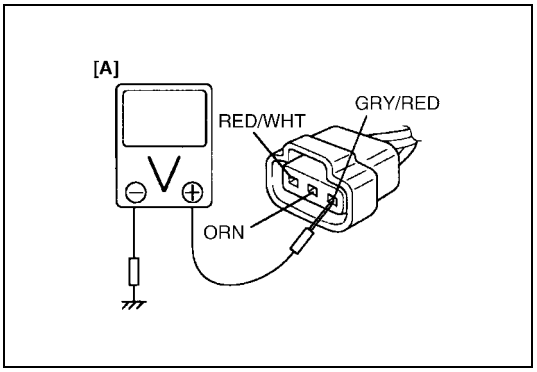

[A]: Fig. 1 for Step 3

MAP Sensor Individual Check

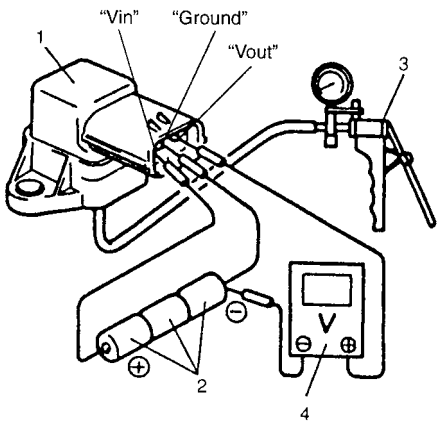

1) Disconnect connector from MAP sensor (1).
2) Remove MAP sensor (1).
3) Arrange 3 new 1.5 V batteries (2) in series (check that total voltage is 4.5 – 5.0 V) and connect its positive terminal to "Vin" terminal of sensor and negative terminal to "Ground" terminal. Then check voltage between "Vout" and "Ground". Also, check if voltage reduces when vacuum is applied up to 400 mmHg by using vacuum pump (3).

Output voltage (When input voltage is 4.5 – 5.5 V, ambient temp. 20 – 30°C, 68 – 86°F)

ALTITUDE (Reference)		BAROMETRIC PRESSURE		OUTPUT VOLTAGE
(ft)	(m)	(mmHg)	(kPa)	(V)
0 | 2 000	0 | 610	760 | 707	100 | 94	3.3 – 4.3
2 001 | 5 000	611 | 1 524	Under 707 over 634	94 | 85	3.0 – 4.1
5 001 | 8 000	1 525 | 2 438	Under 634 over 567	85 | 76	2.7 – 3.7
8 001 | 10 000	2 439 | 3 048	Under 567 over 526	76 | 70	2.5 – 3.3

If check result is not satisfactory, replace MAP sensor (1).

4) Install MAP sensor (1) securely.
5) Connect MAP sensor (1) connector securely.

4. Digital type voltmeter

DTC P0601 Internal Control Module Memory Check Sum Error
DTC P0602 Control Module Programming Error

SYSTEM DESCRIPTION

Internal control module is installed in ECM.

DTC DETECTING CONDITION AND TROUBLE AREA

DTC DETECTING CONDITION	TROUBLE AREA
Data write error or check sum error	ECM

DTC CONFIRMATION PROCEDURE

1) Connect scan tool to DLC with ignition switch OFF.
2) Turn ON ignition switch and clear DTC, pending DTC and freeze frame data by using scan tool.
3) Start engine and run it at idle if possible.
4) Check DTC and pending DTC by using scan tool.

TROUBLESHOOTING

Substitute a known-good ECM and recheck.

DTC P1510 ECM Back-up Power Supply Malfunction

WIRING DIAGRAM

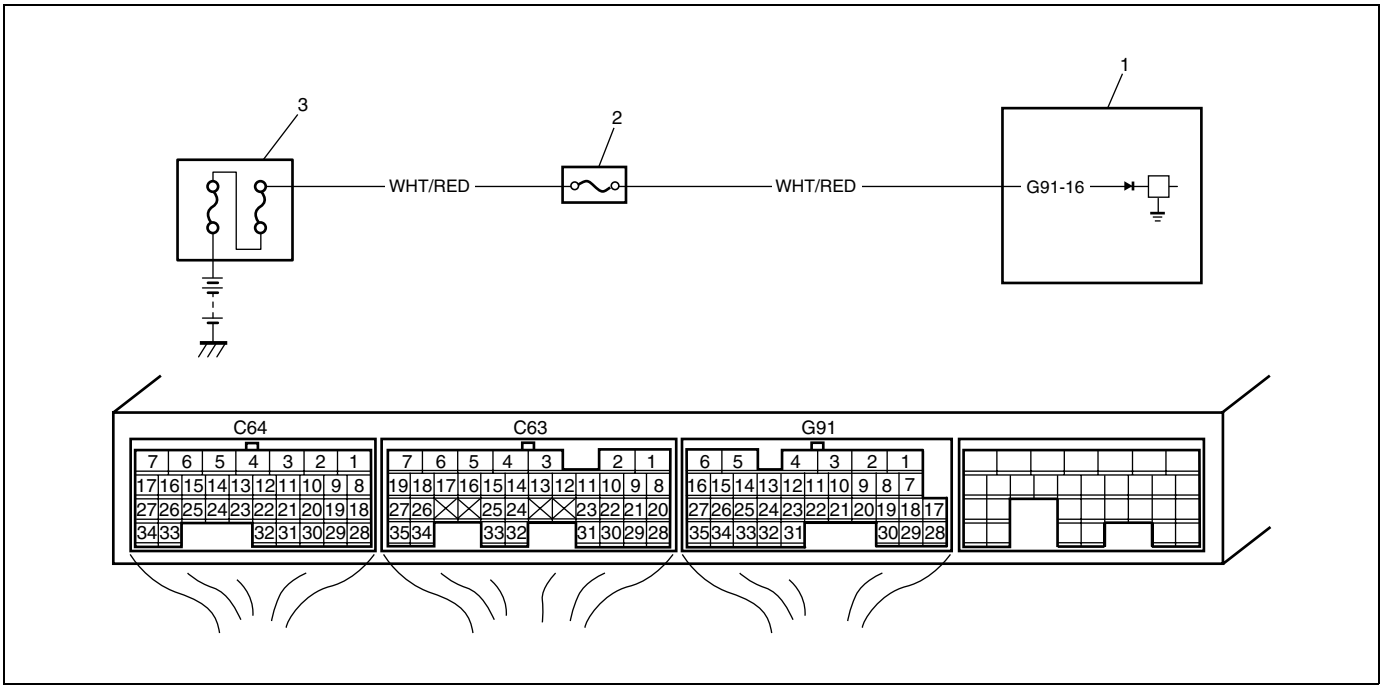

1. ECM
2. “RADIO DOME” fuse
3. Relay/fuse box

CIRCUIT DESCRIPTION

Battery voltage is supplied so that diagnostic trouble code memory, values for engine control learned by ECM, etc. are kept in ECM even when the ignition switch is turned OFF.

DTC DETECTING CONDITION AND TROUBLE AREA

DTC DETECTING CONDITION	TROUBLE AREA
Back-up circuit voltage is less than 5 V for 5 seconds continuously while engine running.	Battery voltage supply circuit

DTC CONFIRMATION PROCEDURE

1) Connect scan tool to DLC with ignition switch turned OFF.
2) Turn ON ignition switch and clear DTC using scan tool and run engine at idle speed for 1 min.
3) Check DTC and pending DTC.

TROUBLESHOOTING

Step	Action	Yes	No
1	Was “Engine and Emission Control System Check” performed?	Go to Step 2.	Go to “Engine and Emission Control System Check”.
2	Battery voltage supply circuit check 1) Disconnect connectors from ECM with ignition switch turned OFF. 2) Remove ECM from vehicle body and then connect connectors to ECM. 3) While engine running, check voltage between “G91-16” and ground. Is voltage 10 – 14 V?	Poor “G91-16” connection or intermittent trouble. Check for intermittent referring to “Intermittent and Poor Connection” in Section 0A. If wire and connections are OK, substitute a known-good ECM and recheck.	“RADIO DOME” fuse blown “WHT/RED” circuit open or short.

DTC P2227 Barometric Pressure Circuit Range/Performance
DTC P2228 Barometric Pressure Circuit Low
DTC P2229 Barometric Pressure Circuit High

SYSTEM DESCRIPTION

Barometric pressure sensor is installed in ECM (PCM).

DTC DETECTING CONDITION AND TROUBLE AREA

DTC DETECTING CONDITION	TROUBLE AREA
DTC P2227: While running under conditions described for "DTC Confirmation Procedure", barometric pressure value compared with intake manifold vacuum value in fuel cut state is not as specified. (2 driving cycle detection logic)	• Manifold absolute pressure sensor performance problem • Barometric pressure sensor in ECM
DTC P2228: Barometric pressure signal less than 1.5 V is detected.	• Barometric pressure sensor in ECM
DTC P2229: Barometric pressure signal more than 4.5 V is detected.	

DTC CONFIRMATION PROCEDURE

DTC P2228/P2229

1) Connect scan tool to DLC with ignition switch OFF.
2) Turn ON ignition switch and clear DTC by using scan tool and run engine for 1 min.
3) Check DTC and pending DTC by using scan tool.

DTC P2227

WARNING:
- **When performing a road test, select a place where there is no traffic or possibility of a traffic accident and be very careful during testing to avoid occurrence of an accident.**
- **Road test should be carried out with 2 persons, a driver and a tester, on a level road.**

1) Connect scan tool to DLC with ignition switch OFF.
2) Turn ON ignition switch and clear DTC, pending DTC and freeze frame data by using scan tool and warm up engine to normal operating temperature.
3) Increase engine speed to 3000 rpm in 3rd gear in case of M/T.
4) Release accelerator pedal and with engine brake applied, keep vehicle coasting for 5 sec. or more. (Keep fuel cut condition for 5 sec. or more) If fuel cut condition is not kept for 5 sec. or more, coast down a slope in engine speed 1000 – 3000 rpm for 5 sec. or more.
5) Stop vehicle and run engine at idle.
6) Repeat Steps 3) – 5) 2 times.
7) Check DTC and pending DTC by using scan tool.

DTC TROUBLESHOOTING

Step	Action	Yes	No
1	Was “Engine and Emission Control System Check” performed?	Go to Step 2.	Go to “Engine and Emission Control System Check”.
2	Is DTC P2227 set?	Go to Step 3.	Substitute a known-good ECM and recheck.
3	MAP sensor check 1) Check MAP sensor and its circuit referring to “DTC P0107 Manifold Absolute Pressure Low Input” and “DTC P0108 Manifold Absolute Pressure High Input”. Is check result satisfactory?	Substitute a known-good ECM and recheck.	MAP sensor or its circuit malfunction.

Table B-1 Fuel Injector Circuit Check

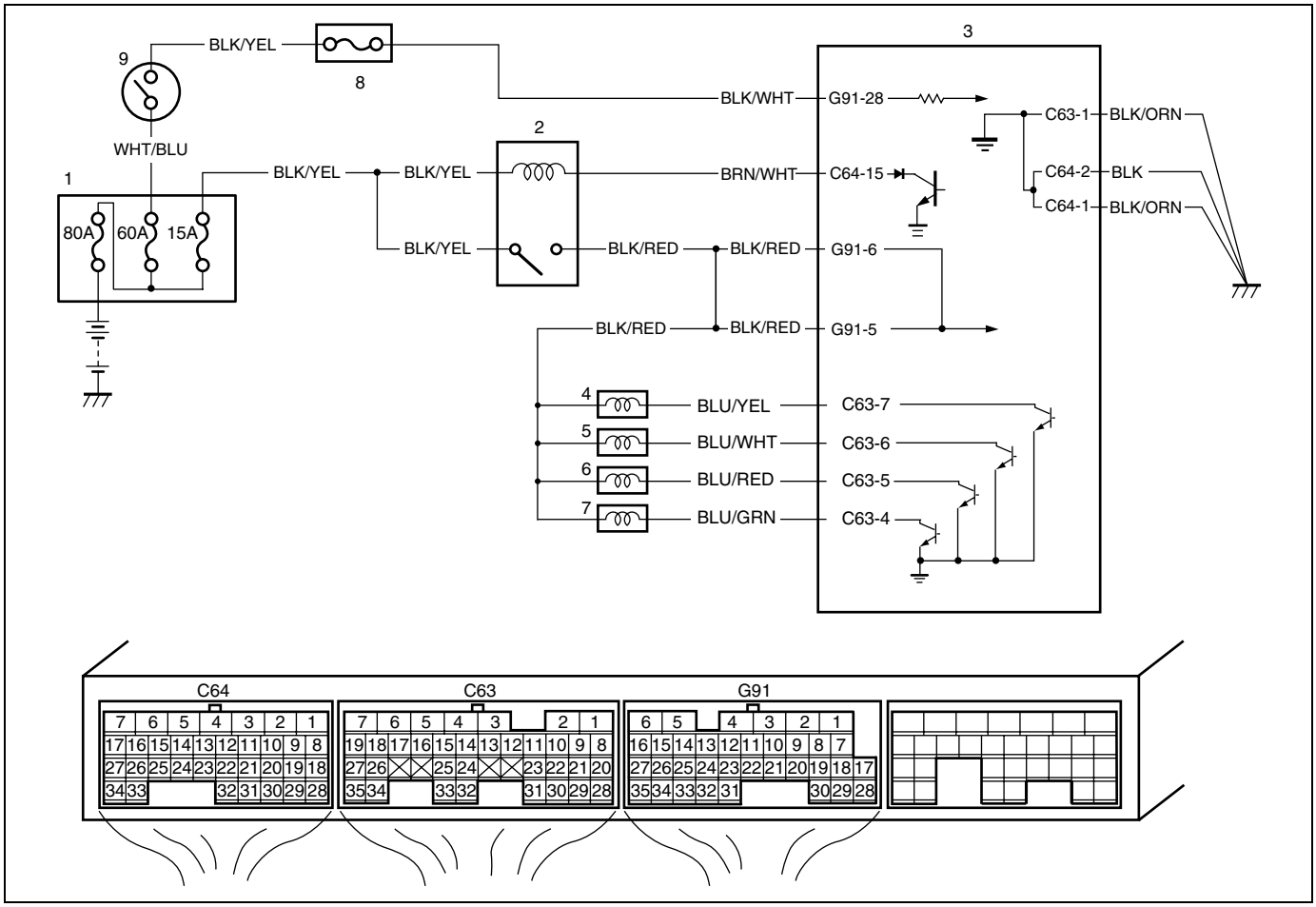

1. Relay/fuse box	4. No.1 injector	7. No.4 injector
2. Main relay	5. No.2 injector	8. “IG” fuse
3. ECM	6. No.3 injector	9. Ignition switch

TROUBLESHOOTING

Step	Action	Yes	No
1	Check each injector for operating sound at engine cranking using sound scope. Do all 4 injector make operating sound?	Fuel injector circuit is in good condition.	Go to Step 2.
2	Check fuel injector resistance. 1) Disconnect connectors from fuel injectors with ignition switch turn OFF. 2) Check for proper connection to fuel injector at each terminals. 3) If OK, check all 4 fuel injectors for resistance, referring to “Fuel injector inspection” in Section 6E1. Are all injectors in good condition?	Go to Step 3.	Faulty fuel injector.
3	Check fuel injector insulation resistance. 1) Check that there is insulating between each fuel injector terminals and engine ground. Is there insulating?	Go to Step 4.	Faulty fuel injector.
4	Check fuel injector power supply. 1) Measure voltage between each “BLK/RED” wire terminal and engine ground with ignition switch turned ON. Is voltage 10 – 14 V?	Go to Step 5.	“BLK/RED” wire in open circuit or shorted to ground circuit. If it is in good condition, go to diag flow table A-3.
5	Check wire circuit. 1) Turn OFF ignition switch. 2) Disconnect connectors from ECM. 3) Measure resistance between each “BLU/YEL”, “BLU/WHT”, “BLU/RED”, “BLU/GRN” wire terminal and vehicle body ground. Is resistance infinity?	Go to Step 6.	“BLU/YEL”, “BLU/WHT”, “BLU/RED”, “BLU/GRN” wire shorted to ground.
6	Check wire circuit. 1) Measure voltage between each “BLU/YEL”, “BLU/WHT”, “BLU/RED”, “BLU/GRN” wire terminal and vehicle body ground with ignition switch turned ON. Is voltage 0 V?	Go to Step 7.	“BLU/YEL”, “BLU/WHT”, “BLU/RED”, “BLU/GRN” wire shorted to power supply circuit.
7	Check fuel injector drive signal. 1) Connect connectors to each fuel injectors and ECM with ignition switch turned OFF. 2) Turn ON ignition switch. 3) Measure voltage “C63-7”, “C63-6”, “C63-5”, “C63-4” terminal and vehicle body ground. Is voltage 10 – 14 V?	Check fuel injector, referring to “Fuel injector inspection” in Section 6E1. If result in good condition, substitute a known-good ECM and recheck.	“BLU/YEL”, “BLU/WHT”, “BLU/RED”, “BLU/GRN” open circuit.

Table B-2 Fuel Pump and Its Circuit Check

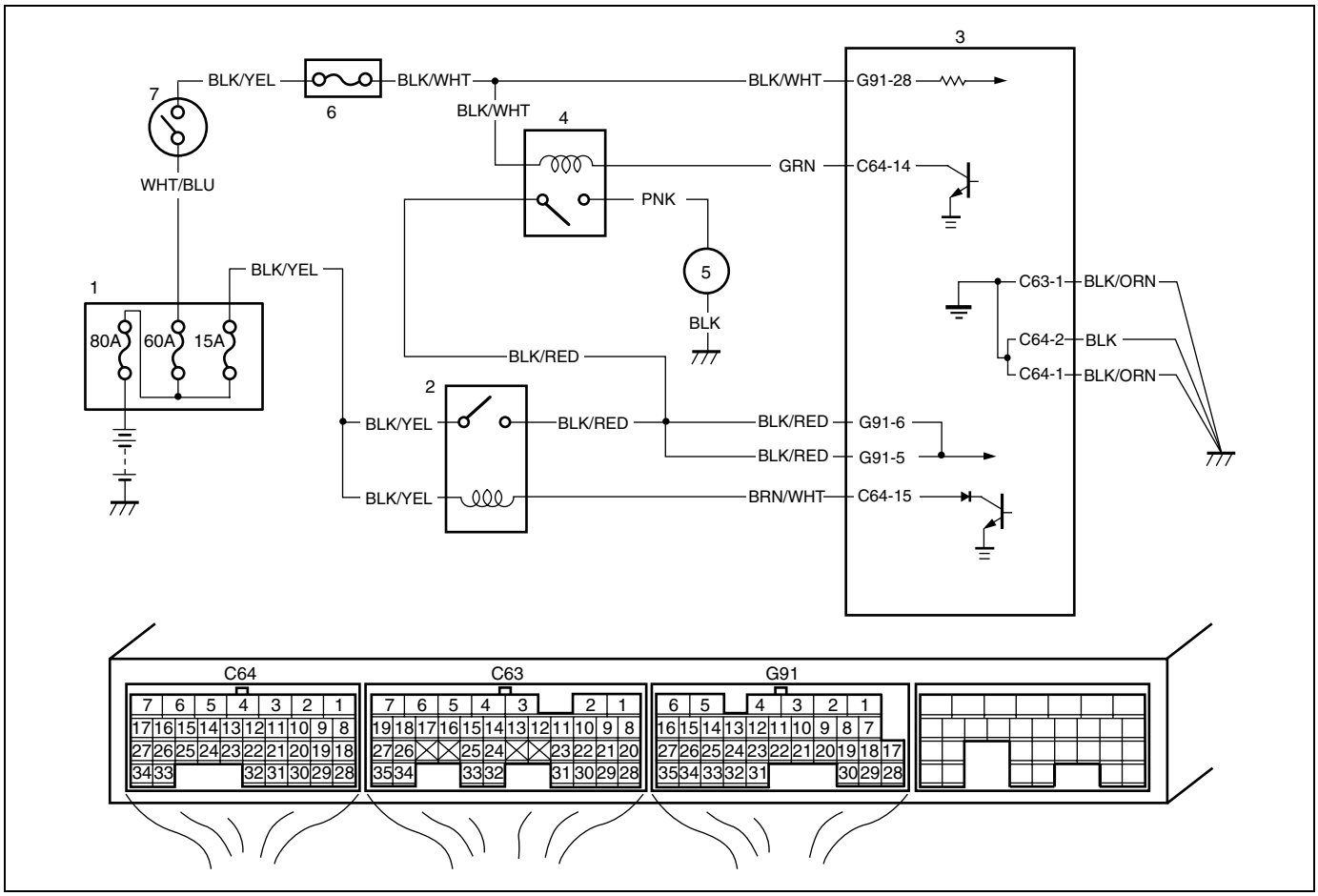

1. Relay/fuse box	4. Fuel pump relay	7. Ignition switch
2. Main relay	5. Fuel pump	
3. ECM	6. "IG" fuse	

TROUBLESHOOTING

Step	Action	Yes	No
1	Check fuel pump control system for operation. See Fig. 1. Is fuel pump heard to operate for 3 sec. after ignition switch ON?	Fuel pump circuit is in good condition.	Go to Step 2.
2	Check fuel pump relay power supply. 1) Disconnect fuel pump relay from relay/fuse box with ignition switch turned OFF. 2) Check for proper connection to fuel pump relay at each terminals. 3) If OK, turn ON ignition switch, measure voltage between "BLK/WHT" wire terminal and engine ground. Is voltage 10 – 14 V?	Go to Step 3.	"BLK/WHT" wire open or shorted to ground circuit.
3	Check fuel pump relay power supply. 1) Turn ON ignition switch, measure voltage between "BLK/RED" wire terminal of fuel pump relay connector and engine ground. Is voltage 10 –14 V?	Go to Step 4.	"BLK/RED" wire open circuit.

Step	Action	Yes	No
4	Check fuel pump relay. 1) Check fuel pump relay, referring to “Main relay, fuel pump relay and radiator fan relay inspection” in Section 6E1. Is relay in good condition?	Go to Step 5.	Faulty relay.
5	Check fuel pump relay drive signal. 1) Connect fuel pump relay to relay/fuse box. 2) Connect voltmeter between “G64-14” terminal and vehicle body ground. 3) Measure voltage at after 3 second ignition switch turned ON. Is voltage 10 – 14 V?	Go to Step 6.	“BLK/WHT” wire open circuit or shorted to ground circuit.
6	Check fuel pump relay drive signal. 1) Measure voltage at within 3 second after ignition switch turned ON. Is voltage 0 – 1 V?	Go to Step 7.	Substitute a known-good ECM and recheck.
7	Check wire circuit. 1) Turn OFF ignition switch. 2) Detach fuel tank, referring to “Fuel Tank Removal and Installation” in Section 6C. 3) Disconnect connector from fuel pump. 4) Measure resistance between “PNK” wire terminal and vehicle body ground. Is resistance infinity?	Go to Step 8.	“PNK” wire shorted to ground.
8	Check fuel pump circuit. 1) Turn OFF ignition switch. 2) Connect service wire between “G64-14” terminal and vehicle body ground. 3) Turn ON ignition switch, measure voltage between “PNK” terminal at fuel pump connector and vehicle body ground. Is voltage 10 – 14 V?	Go to Step 9.	“PNK” wire open circuit.
9	Check fuel pump circuit. 1) Turn OFF ignition switch. 2) Check that there is continuity between “BLK” terminal at fuel pump connector and vehicle body ground. Is there continuity?	Faulty fuel pump.	“BLK” wire open circuit.

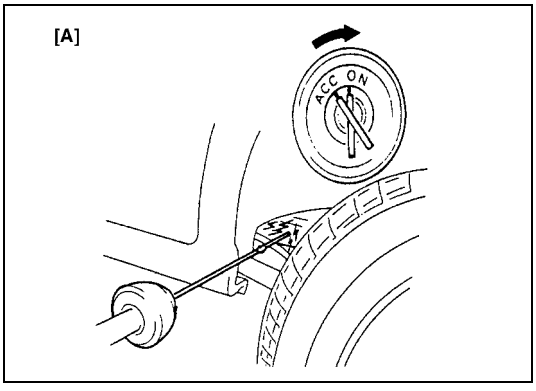

[A]: Fig. 1 for Step 1

Table B-3 Fuel Pressure Check

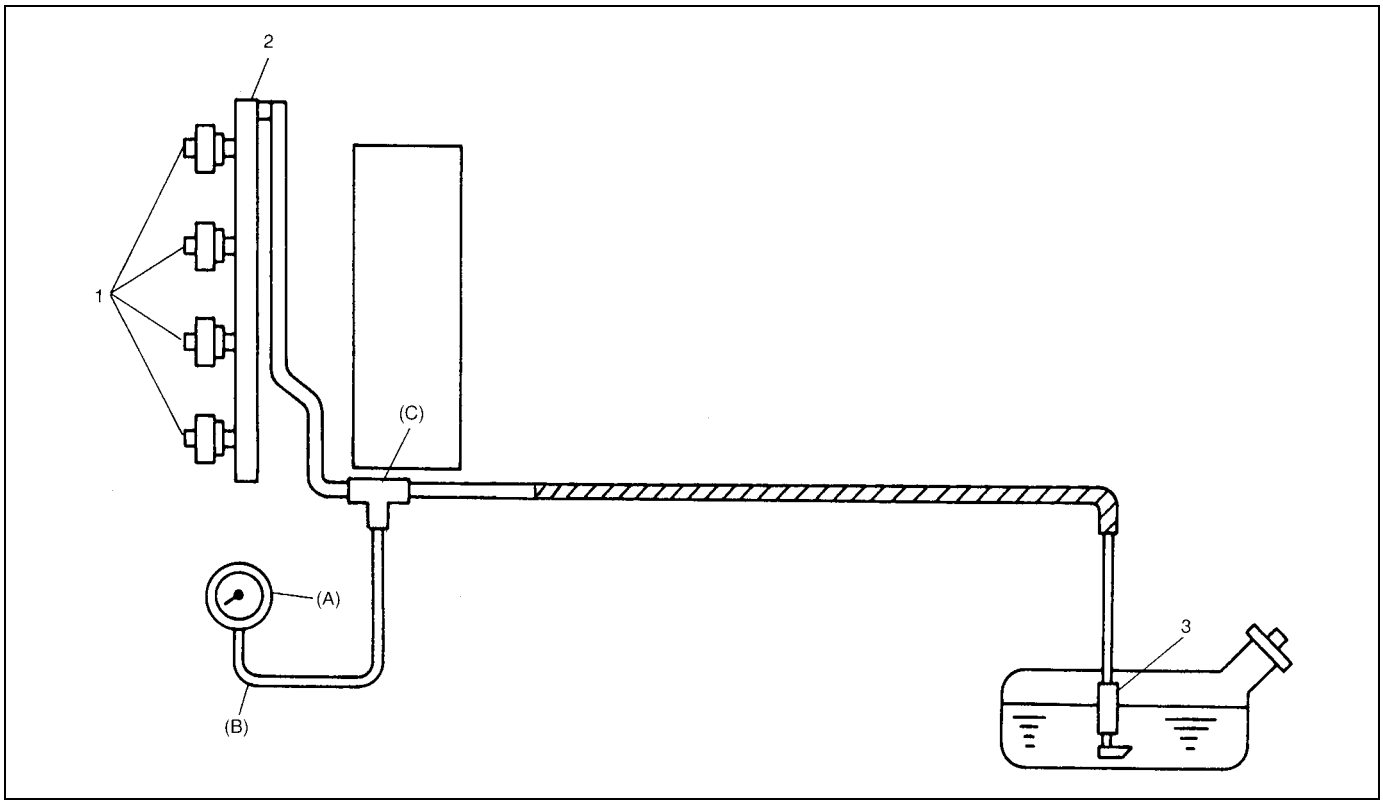

1. Injector	3. Fuel filter and fuel pump	B: Hose
2. Delivery pipe	A: Gauge	C: 3-way joint

TROUBLESHOOTING

NOTE:

Before using the following table, check to make sure that battery voltage is higher than 11 V. If battery voltage is low, pressure becomes lower than specification even if fuel pump and line are in good condition.

Step	Action	Yes	No
1	Fuel Pressure Check 1) Check fuel pressure referring to “Fuel pressure inspection” under “Fuel Delivery System Description” in Section 6E1. Are they satisfied each condition?	Go to Step 2.	Go to Step 5.
2	Fuel Pressure Check 1) Start engine and warm it up to normal operating temperature. 2) Keep engine speed to 4000 rpm. Does fuel pressure shows the value which is about the same as Step 1?	Go to Step 3.	Go to Step 8.
3	Fuel Line Check 1) Check fuel pipe, fuel hose and joint for fuel leakage. Are they in good condition?	Go to Step 4.	Repair or replace.

Step	Action	Yes	No
4	Fuel Line Check 1) Check fuel pipe, fuel hose and joint for damage or deform. Are they in good condition?	Faulty fuel pressure regulator.	Repair or replace.
5	Was fuel pressure higher than specification in Step 1?	Go to Step 6.	Go to Step 7.
6	Fuel Line Check 1) Check fuel pipe, fuel hose and joint for damage or deform. Are they in good condition?	Faulty fuel pressure regulator.	Repair or replace.
7	Fuel Pump Operating Sound Check 1) Remove fuel filler cap and then turn ON ignition switch. Can you hear operation sound?	Go to Step 8.	Faulty fuel pump.
8	Fuel Line Check 1) Check fuel pipe, fuel hose and joint for damage or deform. Are they in good condition?	Clogged fuel filter, faulty fuel pump, faulty fuel pressure regulator or fuel leakage from hose connection in fuel tank.	Repair or replace.

Table B-4 Idle Air Control System Check

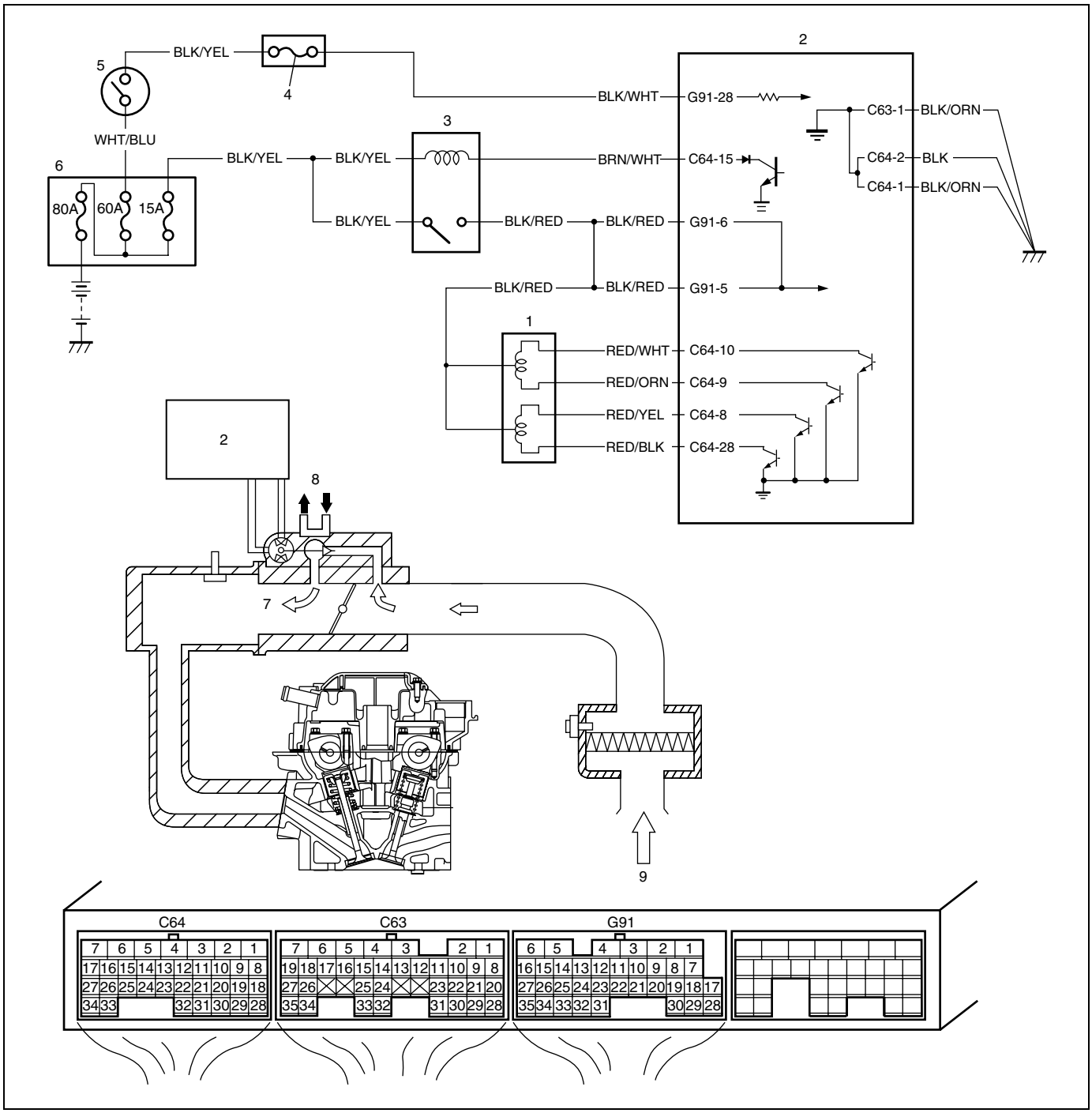

1. IAC valve	4. "IG" fuse	7. Bypass air
2. ECM	5. Ignition switch	8. Engine coolant
3. Main relay	6. Relay/fuse box	9. Intake air

TROUBLESHOOTING

Step	Action	Yes	No
1	Check engine idle speed and IAC duty referring to “Idle speed/idle air control (IAC) duty inspection” in Section 6E1. Is idle speed within specification?	Go to Step 2.	Go to Step 4.
2	Is IAC duty within specification in Step 1?	Go to Step 3.	Check for followings: Vacuum leak EVAP canister purge control system Clog of IAC air passage Accessory engine load “Table B-6 Electric Load Signal Circuit Check” Closed throttle position (TP sensor) Stuck to PCV valve.
3	Is engine idle speed kept specified speed even with headlight ON?	System is in good condition.	Go to Step 6.
4	Was idle speed higher than specification in Step 1?	Go to Step 5.	Go to Step 6.
5	Check A/C (input) signal circuit referring to Step 1 of “Table B-5 A/C Signal Circuits Check (Vehicle with A/C)”, if equipped. Is it in good condition?	Go to Step 6.	Repair or replace A/C signal circuit or A/C system.
6	Check Idle Air Control system. 1) Remove IAC valve from throttle body referring to “Idle air control (IAC) valve removal and installation” in Section 6E1. 2) Check IAC valve for operation referring to “Idle air control (IAC) valve inspection” in Section 6E1. See Fig. 1. Is check result satisfactory?	Intermittent trouble or faulty ECM. Check for intermittent referring to “Intermittent and Poor Connection” in Section 0A.	Go to Step 7.
7	Check Wire Harness for Open or Short. 1) Turn ignition switch OFF. 2) Disconnect IAC valve connector. 3) Check for proper connection to IAC valve at each terminals. 4) If OK, disconnect connectors from ECM. 5) Check for proper connection to ECM at “C64-10”, “C64-9”, “C64-8” and “C64-28” terminals. 6) If OK, check “BLK/RED”, “RED/WHT”, “RED/ORN”, “RED/YEL” and “RED/BLK” circuit for open or short. Are they in good condition?	Replace IAC valve and recheck.	Repair or replace.

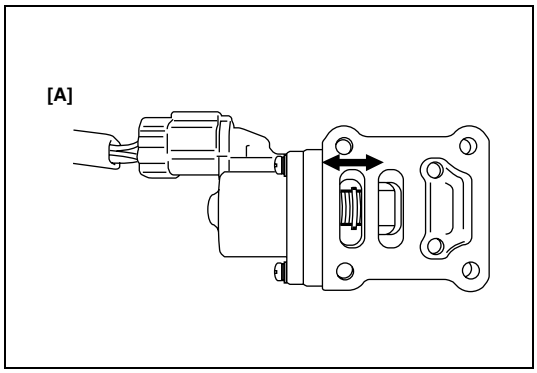

[A]: Fig. 1 for Step 6

Table B-5 A/C Signal Circuits Check (Vehicle with A/C)

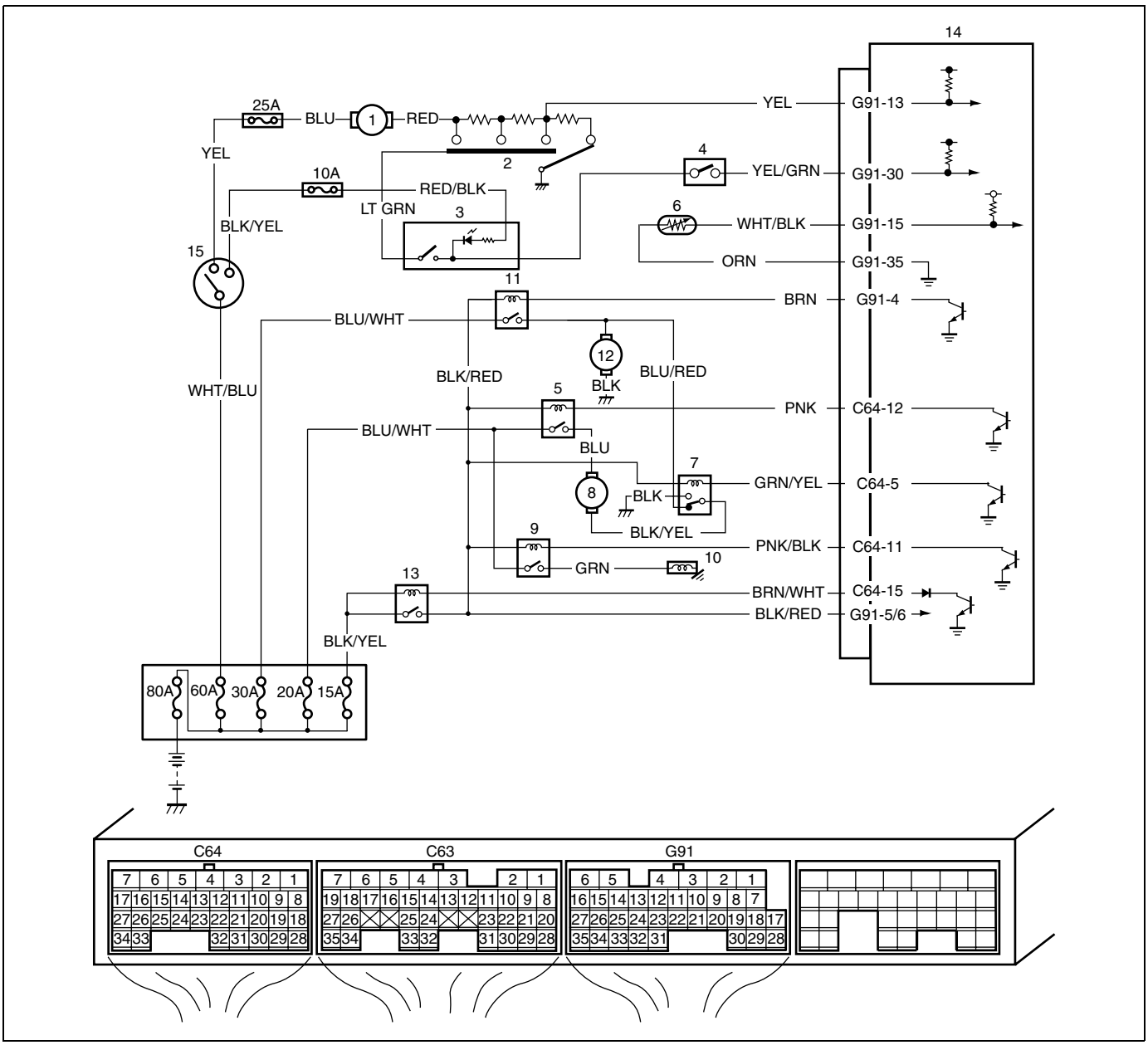

1. Blower fan motor	5. A/C condenser fan relay No.1	9. A/C compressor relay	13. Main relay
2. Blower fan switch	6. A/C evaporator inlet air temp. sensor	10. A/C compressor	14. ECM
3. A/C switch	7. A/C condenser fan relay No.2	11. Radiator fan motor relay	15. Ignition switch
4. A/C pressure switch	8. A/C condenser fan motor	12. Radiator fan motor	

TROUBLESHOOTING

Step	Action	Yes	No
1	Check Evaporator Temp. Sensor 1) Disconnect connectors from ECM with ignition switch turned OFF. 2) Check for proper connection to “G91-15” and “G91-35” wire terminals of ECM connector. 3) If OK, measure resistance between “G91-15” and “G91-35” wire terminals of ECM connector. (See Fig. 1.) At 0°C: 6.3 – 7.0 kΩ At 25°C: 1.8 – 2.2 kΩ Is it within specification?	Go to Step 2.	Faulty A/C evaporator temperature sensor or its circuit.
2	Check A/C signal 1) Measure voltage between “G91-30” wire terminal of ECM connector and vehicle body ground under the following condition. With ignition switch ON and A/C switch OFF: 10 – 14 V With ignition switch ON, A/C and heater blower switch ON: 0 – 1 V Is check result as specified?	Go to Step 3.	A/C and heater blower switch circuit, A/C refrigerant pressure switch or heater controller malfunction.
3	Check A/C signal 1) Connect connectors to ECM with ignition switch turned OFF. 2) Measure voltage between “G91-30” wire terminal of ECM connector and vehicle body ground under the following condition. With ignition switch ON and A/C switch OFF: 10 – 14 V With ignition switch ON, A/C and heater blower switch ON: 0 – 1 V Is check result as specified?	Go to Step 4.	Poor “G91-30” terminal connection. If OK, substitute a known–good ECM and recheck.
4	Check A/C Condenser Fan Control System Is A/C cooling fan started when A/C and heater blower switch turned ON?	Go to Step 8.	Go to Step 5.
5	Check Condenser Fan Control Circuit 1) Check DTC with scan tool. Is DTC P0481 displayed?	Go to “DTC P0481 Fan 2 (A/C Condenser Fan) Control Circuit” in this section.	Go to Step 6.
6	Check Condenser Fan Relay 1) Check A/C condenser fan relay No.1 and No.2 referring to “Condenser Cooling Fan Relay (No.1 and No.2) Inspection” in Section 1B. Are check result satisfactory?	Go to Step 7.	Replace A/C condenser fan relay No.1 and No.2.

Step	Action	Yes	No
7	Check Condenser Fan 1) Check condenser fan referring to "Condenser Cooling Fan Motor On-Vehicle Inspection" in Section 1B. Is check result satisfactory?	A/C condenser fan drive circuit malfunction. If circuit OK, go to Step 8.	Replace A/C condenser fan motor.
8	Check A/C Compressor Control System Is A/C compressor started when A/C and heater blower switch turned ON while engine running?	A/C system is in good condition.	Go to Step 9.
9	Check A/C Compressor Relay Circuit 1) Check voltage between "C64-11" wire terminal of ECM connector and vehicle body ground under the following condition. While engine running and A/C switch OFF: 10 – 14 V While engine running, A/C and heater blower switch ON: 0 – 1 V Are check result satisfactory?	Go to Step 10.	Go to Step 11.
10	Check A/C Compressor Relay 1) Check A/C compressor relay referring to "Compressor Relay Inspection" in Section 1B. Is it in good condition?	Check A/C Compressor referring to "Compressor Relay Inspection" in Section 1B.	Replace A/C compressor relay.
11	Check A/C Compressor Relay Circuit 1) Remove A/C compressor relay with ignition switch turned OFF. 2) Turn ON ignition switch, check voltage between "BLK/RED" wire terminal of A/C compressor relay connector and vehicle body ground. Is voltage 10 –14 V?	Go to Step 12.	"BLK/RED" wire circuit open.
12	Check A/C Compressor Relay 1) Check A/C compressor relay referring to "Compressor Relay Inspection" in Section 1B. Is it in good condition?	"PNK/BLK" wire circuit open. If OK, substitute a known-good ECM and recheck.	Replace A/C compressor relay.

NOTE:

When A/C evaporator thermistor temp. is below 2.5°C (36.5°F), A/C remains OFF (C64-11 terminal voltage becomes 0 – 1 V). This condition is not abnormal.

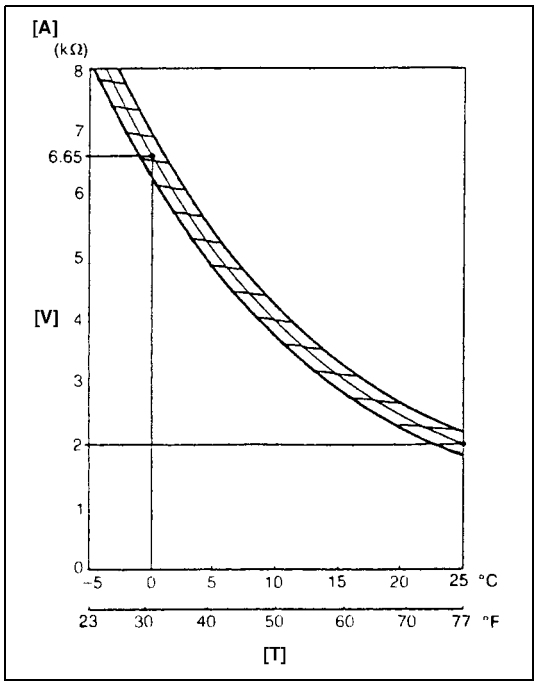

[A]: Fig. 1 for Step 1
[V]: Resistance
[T]: Temperature

Table B-6 Electric Load Signal Circuit Check

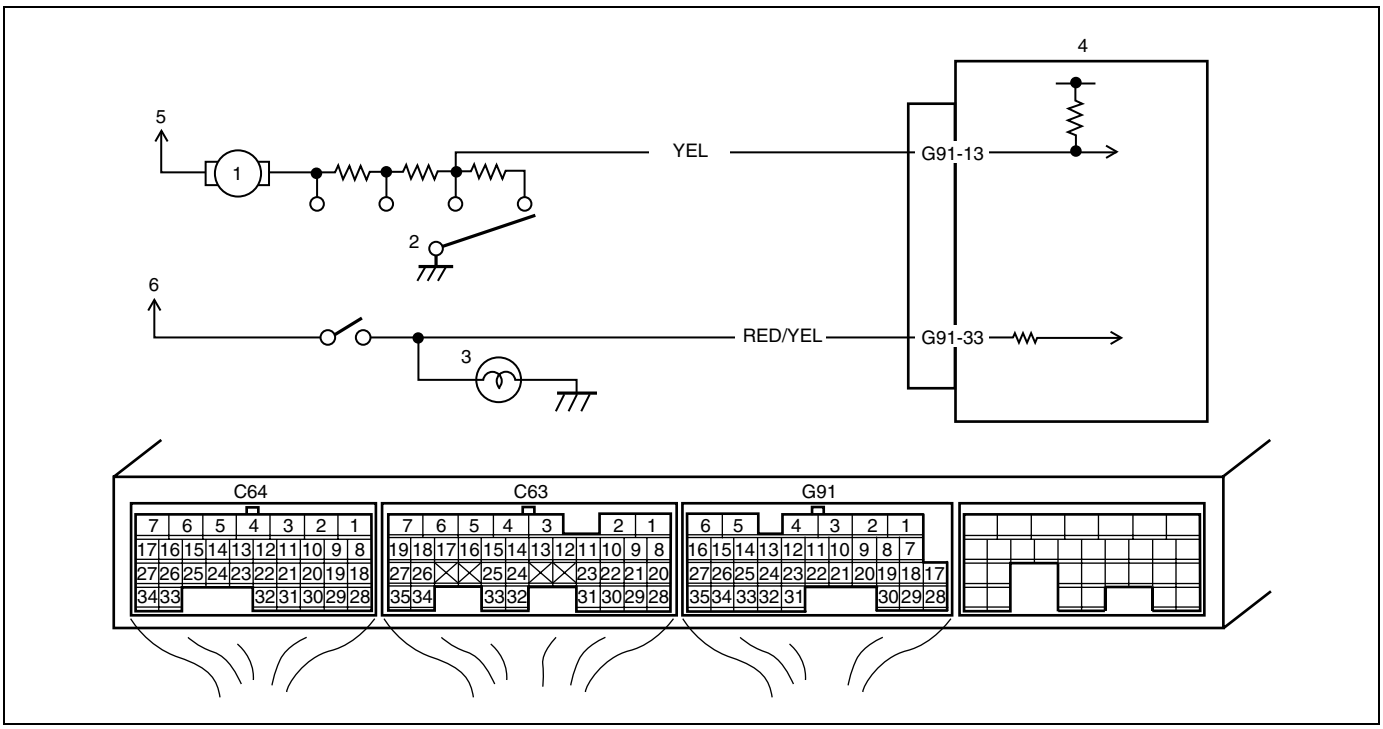

1. Blower fan motor	3. Position lamp	5. To “HEATER” fuse
2. Blower fan switch	4. ECM	6. To “TAIL” fuse

TROUBLESHOOTING

Step	Action	Yes	No
1	Do you have Suzuki Scan Tool?	Go to Step 2.	Go to Step 3.
2	Check electric load signal circuit. 1) Connect Suzuki Scan Tool to DLC with ignition switch OFF. 2) Start engine and select “DATA LIST” mode on scan tool. 3) Check electric load signal under following each condition. See Table 1. Is check result satisfactory?	Electric load signal circuit is in good condition.	“YEL” and/or “RED/YEL” circuit open or short, electric load diodes malfunction or each electric load circuit malfunction.
3	Check electric load signal circuit. 1) Turn ignition switch ON. 2) Check voltage at each terminals “G91-13” and “G91-33” of ECM connector connected, under above each condition. See Table 1. Is each voltage as specified?	Electric load signal circuit is in good condition.	“YEL” and/or “RED/YEL” circuit open or short, electric load diodes malfunction or each electric load circuit malfunction.

Table 1 for Step 2 and 3

		Scan tool or voltmeter		
		SUZUKI SCAN TOOL	VOLTAGE AT G91-33	VOLTAGE AT G91-13
Ignition switch ON, Small light and heater blower fan all turned	OFF	OFF	0 V	10 – 14 V
	ON	ON	10 – 14 V	0 V

Table B-7 Radiator Fan Control System Check

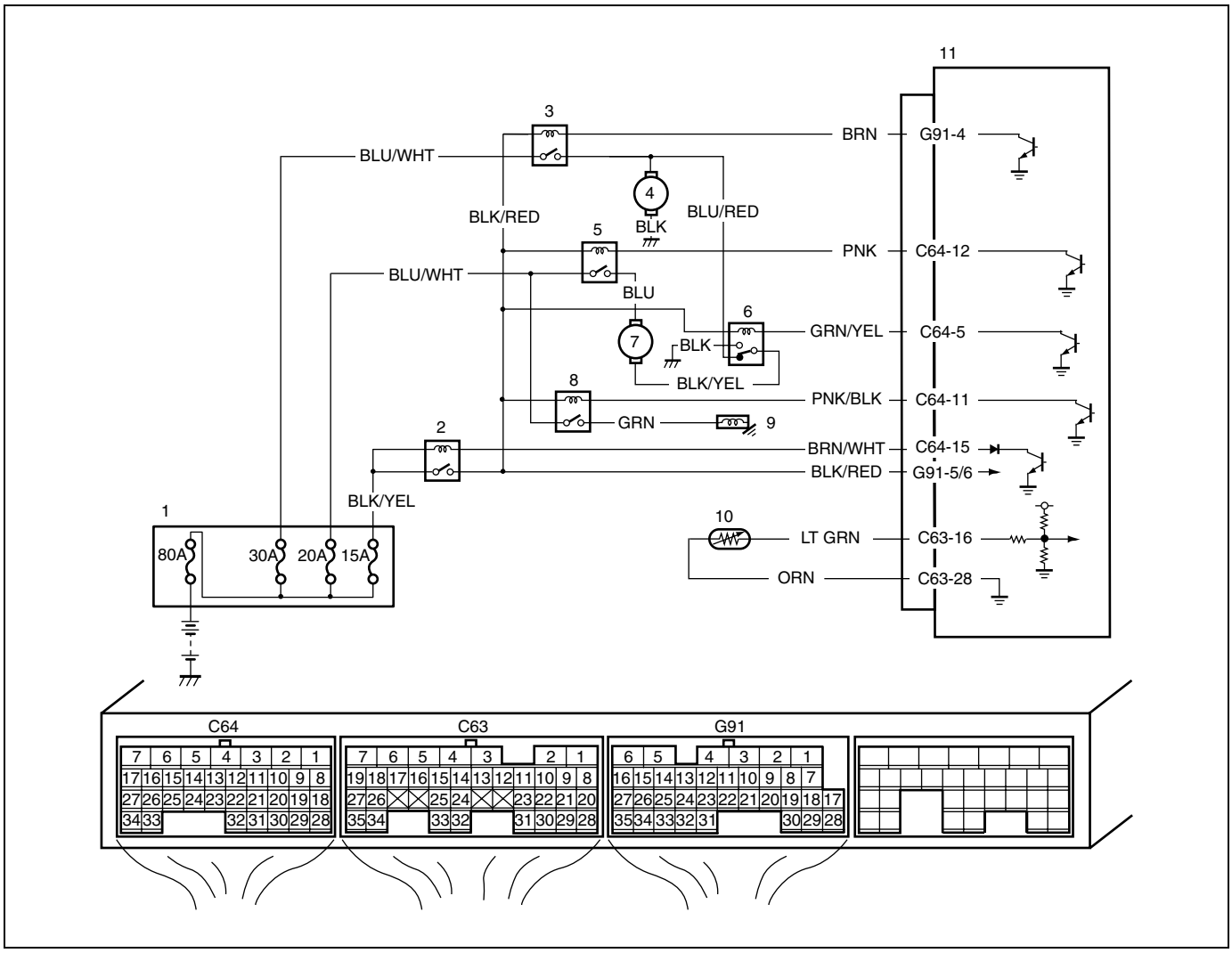

1. Relay/fuse box	5. A/C condenser fan relay No.1	9. A/C compressor
2. Main relay	6. A/C condenser fan relay No.2	10. ECT sensor
3. Radiator fan relay	7. A/C condenser fan motor	11. ECM
4. Radiator fan motor	8. A/C compressor relay	

TROUBLESHOOTING

Step	Action	Yes	No
1	DTC Check Is there DTC(s) ETC sensor circuit (DTC P0117/P0118) and/or radiator fan circuit (DTC P0480) displayed?	Go to corresponding DTC diag. flow table.	Go to Step 2.
2	Radiator Fan Motor Check 1) Disconnect negative cable at battery. 2) Disconnect connector from ECT sensor. 3) Connect negative cable to battery. Does radiator fan motor rotate at ignition switch turned ON?	System is in good condition.	Go to Step 3.

Step	Action	Yes	No
3	Main Fuse Check 1) Turn ignition switch to OFF position. 2) Disconnect connector from ECT sensor. 3) Remove main fuse from relay/fuse box. Is main (30 A) fuse in good condition?	Go to Step 4.	Replace main fuse.
4	Radiator Fan Motor Circuit Check 1) Remove radiator fan relay from relay/fuse box. 2) Measure voltage between “BLU/WHT” wire terminal of radiator fan relay connector and vehicle body ground. Is voltage 10 – 14 V?	Go to Step 5.	“BLU/WHT” wire open or high resistance circuit.
5	Check Radiator Fan Relay 1) Check radiator fan relay referring to “Main relay, fuel pump relay and radiator fan relay inspection” in Section 6E1. Is it in good condition?	Go to Step 6.	Replace radiator fan relay.
6	Radiator Fan Control Circuit Check 1) Disconnect radiator fan motor connector. 2) Measure resistance between “BLU/RED” wire terminal of radiator fan motor connector and “BLU/RED” wire terminal of radiator fan relay connector. Is resistance 1Ω or less?	Go to Step 7.	“BLU/RED” wire circuit open or poor connection.
7	Radiator Fan Control Circuit Check 1) Measure resistance between “BLU/RED” wire terminal of radiator fan motor connector and vehicle body ground. Is it infinite?	Go to Step 8.	“BLU/RED” wire circuit shorted to ground.
8	Radiator Fan Control Circuit Check 1) Turn ON ignition switch. 2) Measure voltage between “BLU/RED” wire terminal of radiator fan motor connector and vehicle body ground. Is voltage 0 V?	Go to Step 9.	“BLU/RED” wire shorted to power circuit.
9	Radiator Fan Control Circuit Check 1) Measure resistance between “BLK” wire terminal of radiator fan motor connector and vehicle body ground. Is resistance 1Ω or less?	Replace radiator fan motor.	“BLK” wire open or high resistance circuit.

Table B-8 A/C Condenser Fan Control System

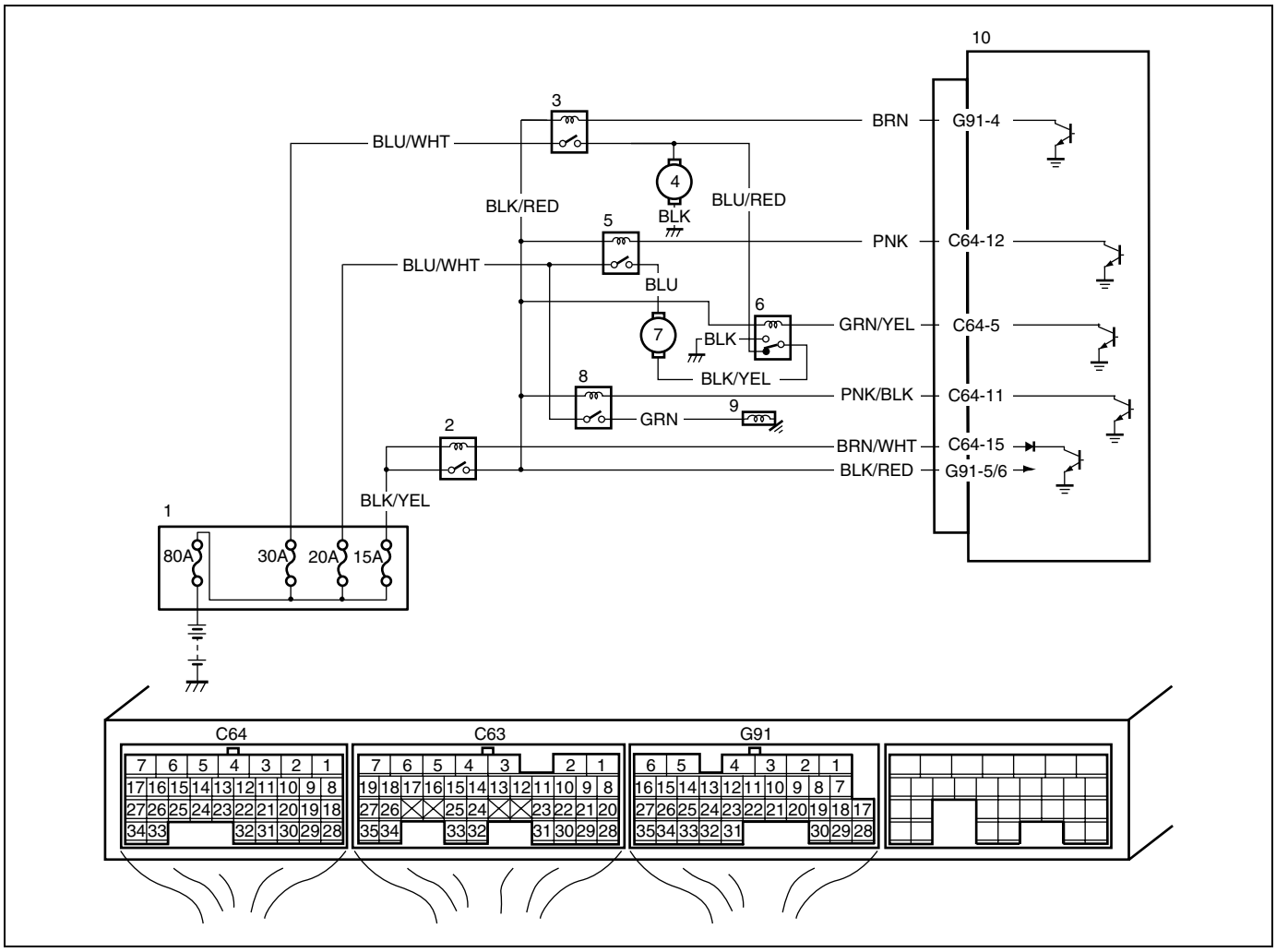

1. Relay/fuse box	5. A/C condenser fan relay No.1	9. A/C compressor
2. Main relay	6. A/C condenser fan relay No.2	10. ECM
3. Radiator fan relay	7. A/C condenser fan motor	
4. Radiator fan motor	8. A/C compressor relay	

TROUBLESHOOTING

Step	Action	Yes	No
1	DTC Check 1) Connect scan tool to DLC with ignition switch turned OFF. 2) Check pending DTC and DTC with scan tool. IS DTC P0480 and/or P0481 displayed?	Go to corresponding DTC diag. Flow table.	Go to Step 2.
2	Check A/C condenser Fan Control System 1) Start engine. 2) Turn ON A/C switch and operate blower fan motor. Is A/C condenser fan motor started?	Go to Step 3.	Go to Step 4.

Step	Action	Yes	No
3	Check A/C condenser fan control system. 1) Run engine and warm up it normal operating temperature. 2) Turn ON lighting switch and blower motor switch. 3) Check that A/C condenser fan motor and radiator fan motor operation as follows. • A/C condenser fan motor and radiator fan motor is low speed drive for 2 seconds when A/C switch is ON with engine idling. • A/C condenser fan motor is high speed drive and radiator fan motor is stopped after 2 seconds when A/C switch is ON with engine idling. Is check result satisfactory?	A/C condenser fan control system is in good condition.	Go to Step 6.
4	Check A/C Refrigerant 1) Check amount of A/C refrigerant referring to “Refrigerant charge” in Section 1B. Is it in good condition?	Go to Step 5.	Recharge refrigerant.
5	Check A/C Condenser Fan Relay 1) Check A/C condenser fan relay No.1 and No.2 referring to “Condenser Cooling Fan Relay (No.1 and No.2) Inspection” in Section 1B. Are check result in good condition?	Go to Step 6.	Replace A/C condenser fan relay No.1 or No.2.
6	Check Main Fuse 1) Remove main (20 A) fuse from relay/fuse box. Is it in good condition?	Go to Step 7.	Replace main fuse.
7	Check Wire Circuit 1) Remove A/C condenser fan relay No.1 and No.2 with ignition switch turned OFF. (See Fig. 1.) 2) Turn ON ignition switch, measure voltage between “BLU/WHT” wire terminal of A/C condenser fan relay No.1 connector and vehicle body ground, “BLU/WHT” wire terminal of A/C condenser fan relay No.2 connector and vehicle body ground. Are voltage 10 – 14 V?	Go to Step 8.	“BLU/WHT” wire in open or high resistance circuit.
8	Check Wire Circuit 1) Disconnect A/C condenser fan motor connector with ignition switch turned OFF. 2) Measure resistance between “BLU” wire terminal of A/C condenser fan relay No.1 connector and “BLU” wire terminal of A/C condenser fan motor connector. Is resistance 1Ω or less?	Go to Step 9.	“BLU” wire in open or high resistance circuit.

Step	Action	Yes	No
9	Check Wire Circuit 1) Turn ON ignition switch, measure voltage between “BLU” wire terminal of A/C condenser fan relay No.1 connector and vehicle body ground. Is voltage 0 V?	Go to Step 10.	“BLU” wire shorted to power circuit.
10	Check Wire Circuit 1) Turn OFF ignition switch, measure resistance between “BLU/YEL” wire terminal of A/C condenser fan relay No.2 connector and “BLU/YEL” wire terminal of A/C condenser fan motor connector. Is resistance 1Ω or less?	Go to Step 11.	“BLU/YEL” wire shorted to power circuit.
11	Check Wire Circuit 1) Turn ON ignition switch, measure voltage between “BLU/YEL” wire terminal of A/C condenser fan relay No.2 connector and vehicle body ground. Is voltage 0 V?	Go to Step 12.	“BLU/YEL” wire in open or high resistance circuit.
12	Check Wire Circuit 1) Turn OFF ignition switch, measure resistance between “BLK” wire terminal of A/C condenser fan relay No.2 connector and vehicle body ground. Is resistance 1Ω or less?	Go to Step 13.	“BLK” wire in open or high resistance circuit.
13	Check A/C Condenser Fan Motor 1) Check A/C condenser fan motor operation referring to “Condenser Cooling Fan Motor On-Vehicle Inspection” in Section 1B. Is it in good condition?	Intermittent trouble. Check for intermittent referring to “Intermittent and Poor Connection” in Section 0A. If OK, substitute a known-good ECM and recheck.	Replace A/C condenser fan motor.

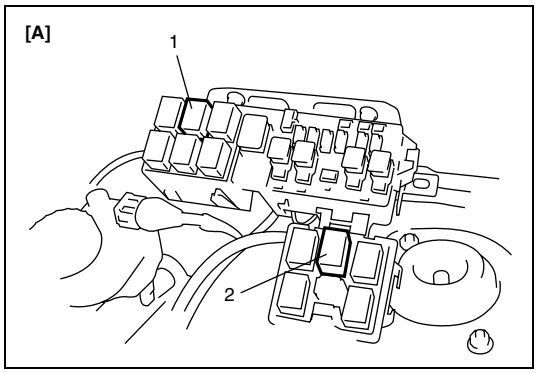

[A]: Fig. 1 for Step 7
1. A/C condenser relay No.1
2. A/C condenser relay No.2

Special Tool

 09912-58442 Pressure gauge	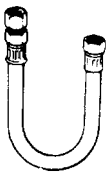 09912-58432 Pressure hose	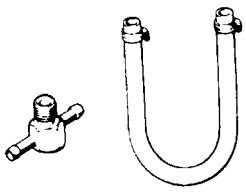 09912-58490 3-way joint & hose	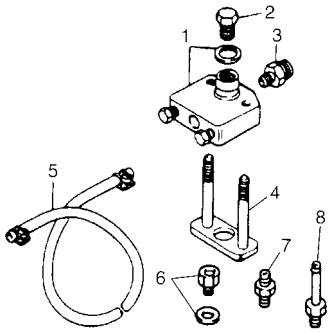 09912-58421 Checking tool set (See NOTE "A".)
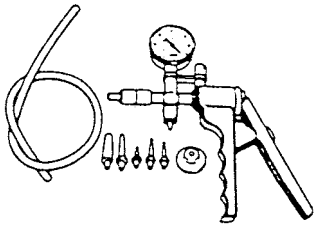 09917-47011 Vacuum pump gauge	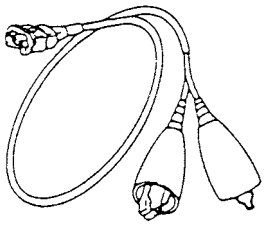 09930-88530 Injector test lead	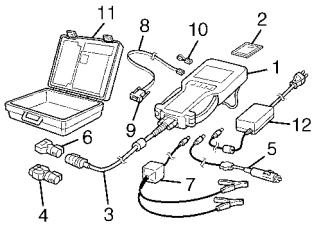 Tech 2 kit (Suzuki Scan Tool) (See NOTE "C".)	 09912-57610 Checking tool plate

NOTE:

- **"A": This kit includes the following items.**
  1. Tool body & washer, 2. Body plug, 3. Body attachment, 4. Holder, 5. Return hose & clamp, 6. Body attachment-2 & washer, 7. Hose attachment-1, 8. Hose attachment-2
- **"C": This kit includes the following items.**
  1. Tech 2, 2. PCMCIA card, 3. DLC cable, 4. SAE 16/19 adapter, 5. Cigarette cable, 6. DLC loopback adapter, 7. Battery power cable, 8. RS232 cable, 9. RS232 adapter, 10. RS232 loopback connector, 11. Storage case, 12. Power supply

SECTION 6A1

ENGINE MECHANICAL (M13 ENGINE)

WARNING:

For vehicles equipped with a Supplemental Restraint (Air Bag) System :

- **Service on and around the air bag system components or wiring must be performed only by an authorized SUZUKI dealer. Refer to "System Components and Wiring Location View" under "General Description" in air bag system section in order to confirm whether you are performing service on or near the air bag system components or wiring. Please observe all WARNINGS and "Service Precautions" under "On-Vehicle Service" in air bag system section before performing service on or around the air bag system components or wiring. Failure to follow WARNINGS could result in unintentional activation of the system or could render the system inoperative. Either of these two conditions may result in severe injury.**
- **Technical service work must be started at least 90 seconds after the ignition switch is turned to the "LOCK" position and the negative cable is disconnected from the battery. Otherwise, the system may be activated by reserve energy in the Sensing and Diagnostic Module (SDM).**

CONTENTS

General Description 6A1-3
- Engine Construction Description 6A1-3
- Engine Lubrication Description 6A1-4
- Variable Valve Timing (VVT) System Description 6A1-5
  - System description 6A1-5
  - Oil control valve 6A1-6
  - Cam timing sprocket 6A1-6
  - Timing advancing 6A1-6
  - Timing holding 6A1-6
  - Timing retarding 6A1-6
  - Targeted timing varying operation 6A1-7

Diagnosis 6A1-8
- Diagnosis Table 6A1-8
- Compression Check 6A1-8
- Engine Vacuum Check 6A1-9
- Oil Pressure Check 6A1-11
- Valve Lash (Clearance) Inspection 6A1-13
- Shim Replacement 6A1-13

On-Vehicle Service 6A1-16
- Air Cleaner Element Removal and Installation 6A1-16
- Air Cleaner Element Inspection and Cleaning 6A1-17
- Knock Sensor Removal and Installation ... 6A1-17
- Cylinder Head Cover Removal and Installation 6A1-17
- Throttle Body and Intake Manifold Components 6A1-20
- Throttle Body Removal and Installation 6A1-21
- Intake Manifold Removal and Installation 6A1-22
- Exhaust Manifold Components 6A1-23
- Exhaust Manifold Removal and Installation 6A1-24
- Oil Pan and Oil Pump Strainer Components 6A1-26
- Oil Pan and Oil Pump Strainer Removal and Installation 6A1-26
- Engine Mountings Components 6A1-29

Unit Repair Overhaul 6A1-30
- Engine Assembly Removal and Installation 6A1-30
- Timing Chain Cover Components 6A1-34
- Timing Chain Cover Removal and Installation 6A1-35
- Timing Chain Cover Inspection 6A1-38
  - Oil seal 6A1-38
  - Timing chain cover 6A1-38
  - Oil control valve 6A1-39
  - Oil gallery pipe 6A1-39
- Oil Pump Components 6A1-39
- Oil Pump Removal and Installation 6A1-40
- Oil Pump Disassembly and Assembly 6A1-40
- Oil Pump Inspection 6A1-42
  - Oil seal 6A1-42
  - Oil pump assembly 6A1-42
  - Radial clearance 6A1-43
  - Side clearance 6A1-43
  - Relief valve spring free length and load 6A1-43

Timing Chain and Chain Tensioner Components 6A1-44
Timing Chain and Chain Tensioner Removal and Installation 6A1-44
Timing Chain and Timing Chain Tensioner Inspection 6A1-48
Timing chain tensioner 6A1-48
Crankshaft timing sprocket 6A1-48
Timing chain 6A1-49
Timing chain tensioner adjuster 6A1-49
Timing chain No.1 guide 6A1-49
Camshaft, Tappet and Shim Components 6A1-50
Camshaft, Tappet and Shim Removal and Installation 6A1-50
Camshaft, Tappet and Shim Inspection 6A1-53
Intake cam timing sprocket assembly 6A1-53
Cam wear 6A1-54
Camshaft runout 6A1-54
Camshaft journal wear 6A1-54
Wear of tappet and shim 6A1-55
Valves and Cylinder Head Components 6A1-56
Valves and Cylinder Head Removal and Installation 6A1-57
Valves and Cylinder Head Disassembly and Assembly 6A1-60
Valves and Cylinder Head Inspection 6A1-63
Valve guides 6A1-63
Valves 6A1-63
Cylinder head 6A1-65
Valve springs 6A1-66
Pistons, Piston Rings, Connecting Rods and Cylinders Components 6A1-67
Pistons, Piston Rings, Connecting Rods and Cylinders Removal and Installation 6A1-68
Pistons, Piston Rings, Connecting Rods and Cylinders Disassembly and Assembly 6A1-69
Pistons, Piston Rings, Connecting Rods and Cylinders Inspection 6A1-71
Cylinder 6A1-71
Pistons 6A1-71
Piston pin 6A1-72
Piston rings 6A1-73
Connecting rod 6A1-74
Crank pin and connecting rod bearings 6A1-75
Main Bearings, Crankshaft and Cylinder Block Components 6A1-79
Main Bearings, Crankshaft and Cylinder Block Removal and Installation 6A1-80
Main Bearings, Crankshaft and Cylinder Block Inspection 6A1-84
Main bearing cap No.1 bolt 6A1-84
Crankshaft 6A1-84
Main bearings 6A1-85
Rear oil seal 6A1-90
Flywheel 6A1-90
Sensor plate 6A1-91
Cylinder block 6A1-91
Required Service Material 6A1-92
Tightening Torque Specification 6A1-92
Special Tool 6A1-94

General Description

Engine Construction Description

The engine is water-cooled, in line 4 cylinders, 4 stroke cycle gasoline unit with its DOHC (Double overhead camshaft) valve mechanism arranged for “V” type valve configuration and 16 valves (4 valves/one cylinder). The double overhead camshaft is mounted over the cylinder head; it is driven from crankshaft through timing chain, and no push rods are provided in the valve train system.

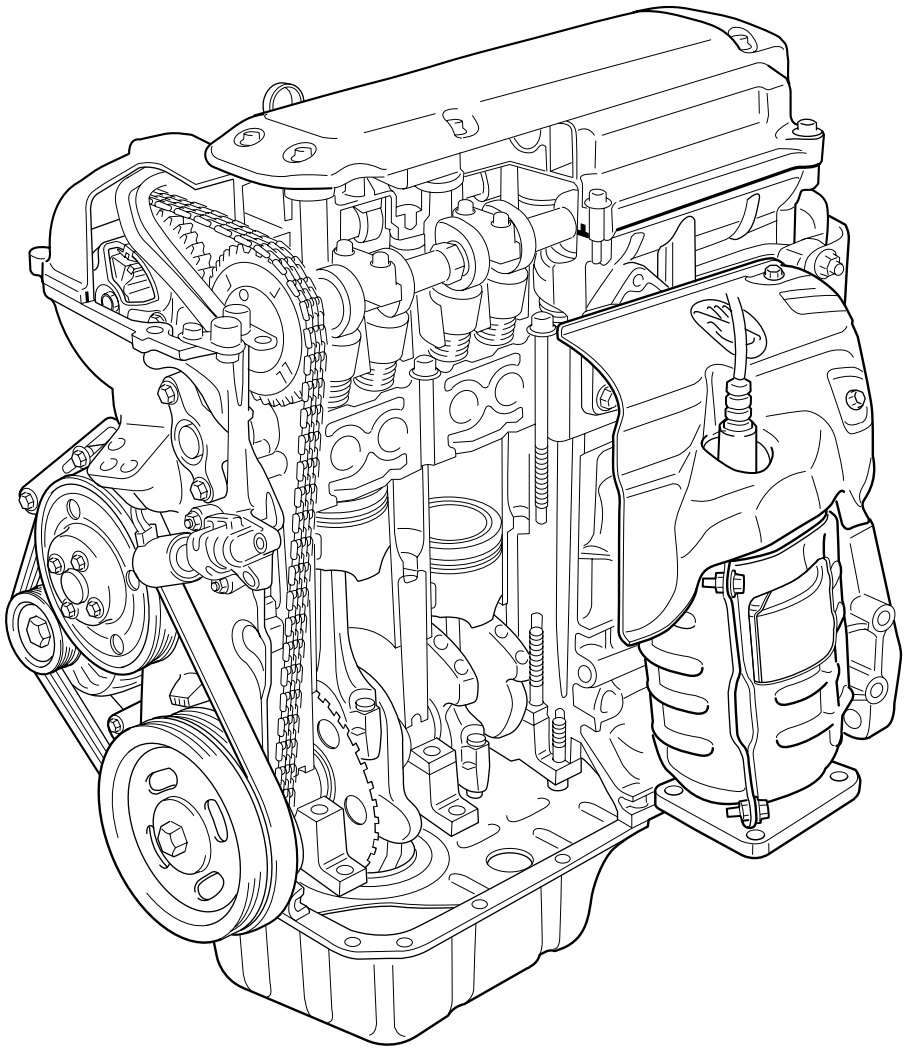

Engine Lubrication Description

The oil pump is of a trochoid type, and mounted on the crankshaft. Oil is drawn up through the oil pump strainer and passed through the pump to the oil filter.
The filtered oil flows into 2 paths in cylinder block.
In one path, oil reaches the crankshaft journal bearings. Oil from the crankshaft journal bearings is supplied to the connecting rod bearings by means of intersecting passages drilled in the crankshaft, and then injected from the big end of connecting rod to lubricate piston, rings, and cylinder wall.
In other path oil goes up to the cylinder head and lubricates valves and camshafts, etc., after passing through the internal oilway of camshafts.

An oil relief valve is provided on the oil pump. This valve starts relieving oil pressure when the pressure exceeds about 390 kPa (3.9 kg/cm^2, 56.6 psi).

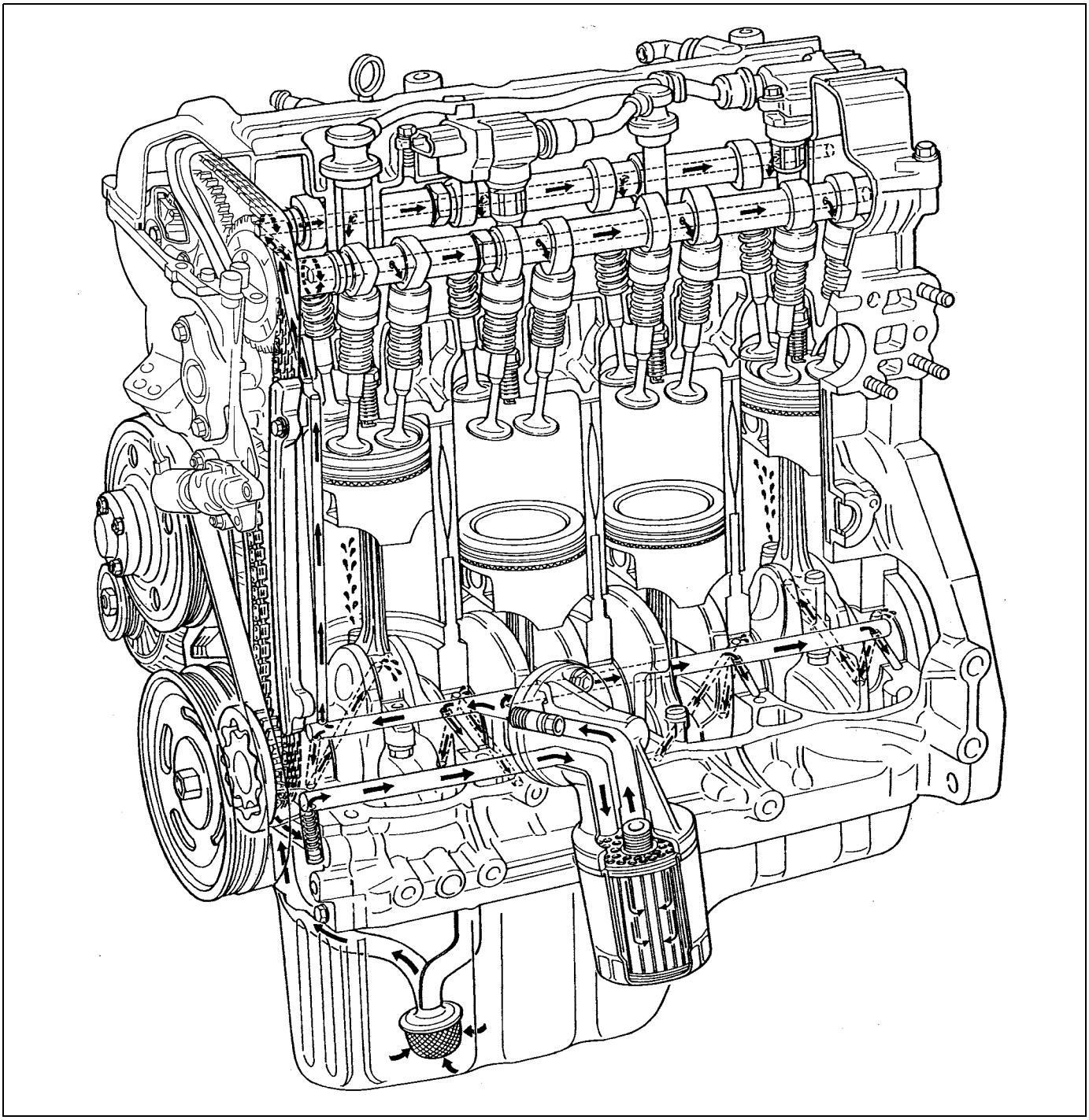

Variable Valve Timing (VVT) System Description

System description

The VVT system is an electronic control system which continuously vary and optimize the intake valve timing in response to the engine operating condition.

The optimized intake valve timing produce such an air intake with high efficiency that both the higher power generation and lower fuel consumption can be attained in the whole engine speed range from low to high. In the area of the average engine load, low emission of nitrogen oxides (NOx) and high fuel efficiency can also be attained by making the valve opening overlap between the intake and exhaust valves longer.

For the brief of the system operation, the intake valve timing is varied by the cam timing sprocket (1) which varies the rotational phase between the intake camshaft (3) and sprocket. The rotor (2) in the cam timing sprocket is actuated by switching or adjusting the hydraulic pressure applied to the chambers for the timing advancing (7) and/or retarding (6). To switch or adjust the hydraulic pressure appropriately, ECM operates the oil control valve (12) with detecting the engine speed, intake air value, throttle opening, engine coolant temperature and camshaft position (angle).

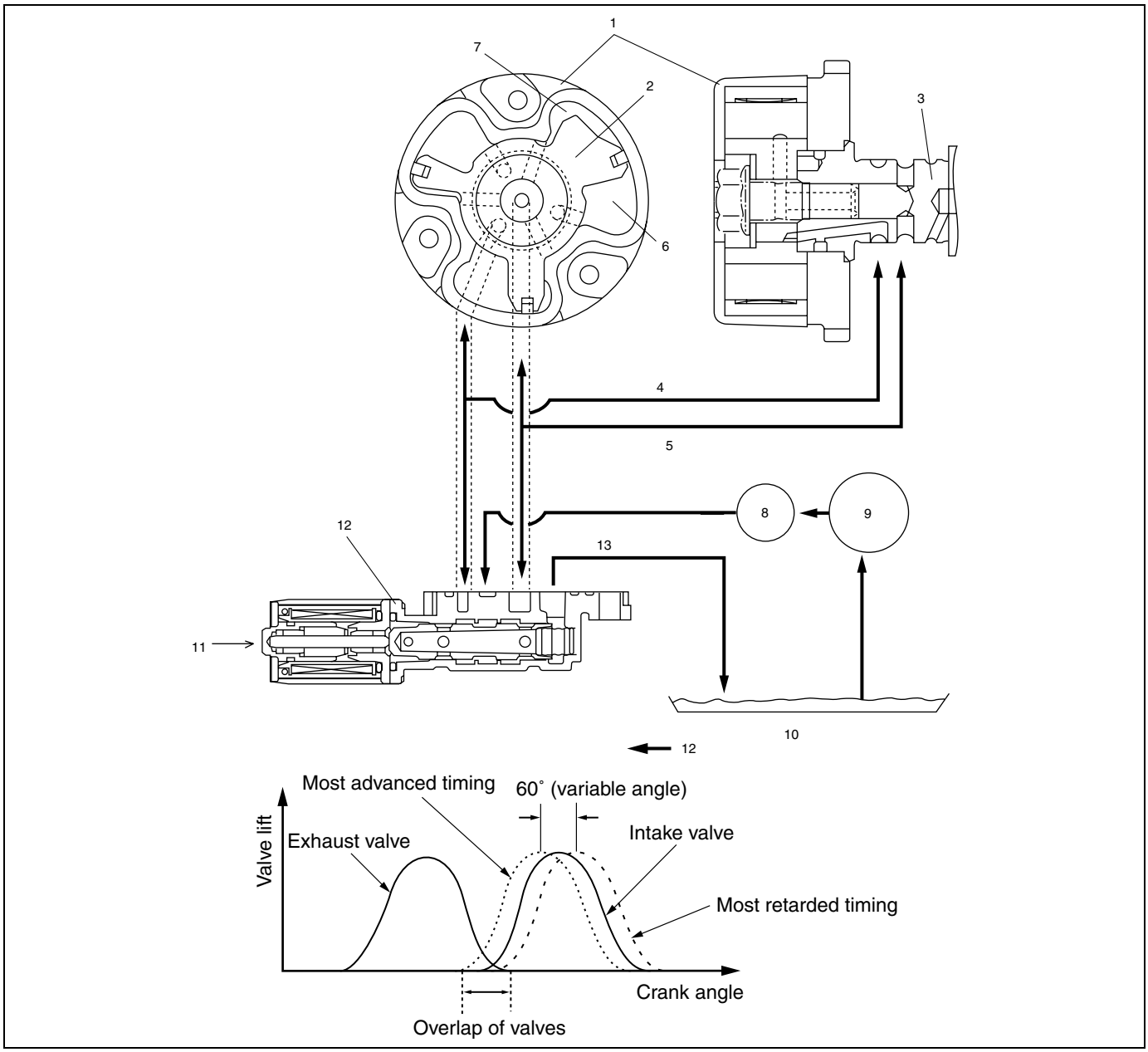

4. Oil passage to chamber for timing retarding	8. Oil filter	10. Oil pan	12. Oil flow
5. Oil passage to chamber for timing advancing	9. Oil pump	11. Control signal from ECM	

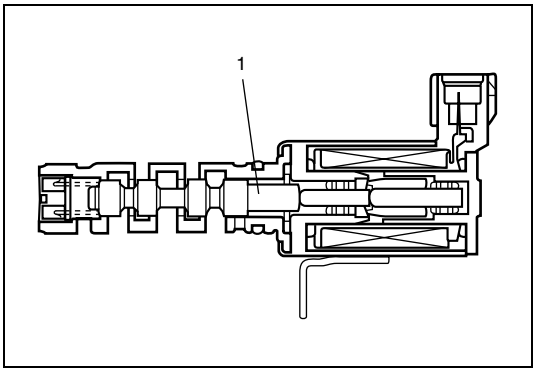

Oil control valve

The oil control valve switches and adjusts the hydraulic pressure applied to the cam timing sprocket by moving the spool valve (1) according to the duty pulse signals output from the ECM. By this operation, the intake valve timing is varied continuously. Signals output from the ECM are the duty pulse of about 240 Hz.

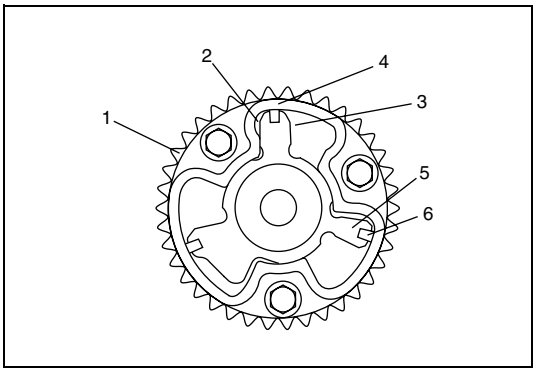

Cam timing sprocket

The cam timing sprocket is equipped with the chambers for timing advancing (2) and retarding (3) which are separated by the rotor (5). The rotor rotates receiving the hydraulic pressure applied to both the chambers. The sprocket (1) is installed on the housing (4) and the rotor is secured on the intake camshaft by fastening the bolts. Therefore, the actuation of the rotor makes the phase difference between the sprocket and intake camshaft.

6. Seal

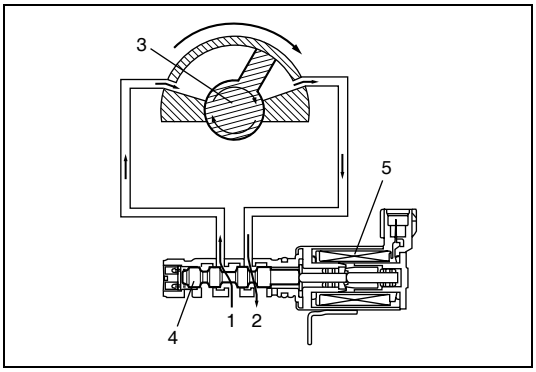

Timing advancing

When the duty ratio of the signal output from the ECM is heavy, the spool valve (4) of the oil control valve moves to the left (opposite direction against the coil (5)). By this spool valve movement, the pressurized oil (1) is led into the chambers for timing advancing and the oil in the chambers for timing retarding is drained. This operations actuate the rotor (3) and result in the advanced timing of the intake valve.

2. Drain

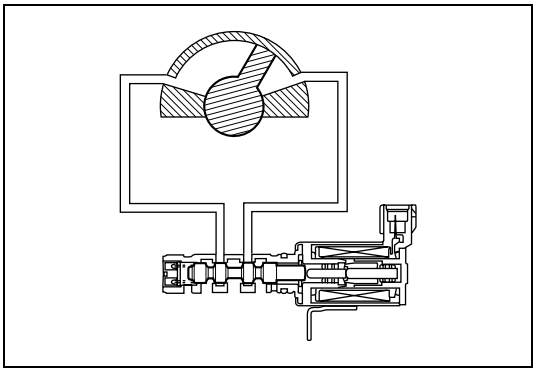

Timing holding

When the duty ratio of the signal output from the ECM shows that of holding, the spool valve of the oil control valve is located at hold position. Because this condition generates no oil pressure changes in both chambers, the rotor is fixed at a target position.

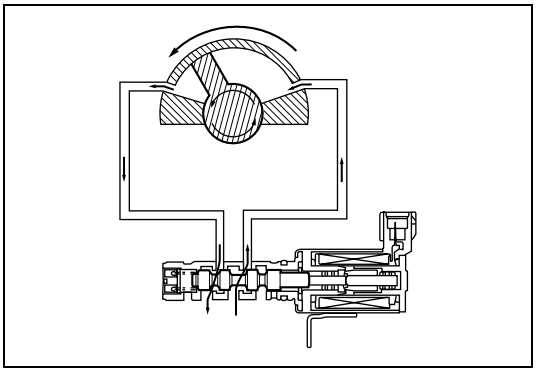

Timing retarding

When the duty ratio of the signal output from the ECM is light, the spool valve of the oil control valve moves to the right (head for the coil). By this spool valve movement, the pressurized oil is led into the chambers for timing retarding and the oil in the chambers for timing advancing is drained. This operations actuate the rotor and result in the retarded timing of the intake valve.

Targeted timing varying operation

DRIVING CONDITION	VALVE TIMING	TARGET OF CONTROL	EFFECT
Engine running at idle speed	Most retarded	To shorten the valve opening overlap in order to prevent the exhaust gas counterflow to intake manifold.	Stabilization of the engine rotation at idle speed.
Average engine load range	To the advanced side	To lengthen the valve opening overlap in order to enhance the internal exhaust gas recirculation and reduce the pumping loss.	Improvement of the fuel efficiency. Lowering of the exhaust emission.
Light engine load range	To the retarded side	To shorten the valve opening overlap in order to prevent the exhaust gas counterflow to intake manifold.	Keeping of the engine stability.
Low or average engine speed range with heavy engine load	To the advanced side	To advance the closing timing of the intake valve in order to improve the volumetric efficiency.	Improvement of generating the engine torque at low and average engine speed.
High engine speed range with heavy engine load	To the retarded side	To retard the closing timing of the intake valve in order to improve the volumetric efficiency.	Improvement of generating the engine power.
Low engine coolant temperature	Most retarded	To shorten the valve opening overlap in order to prevent the exhaust gas counterflow to intake manifold and reduce the fuel increasing. To slow the fast idle speed of the engine as a result of stabilizing the engine idling.	Stabilization of the fast idling of the engine. Improvement of the fuel efficiency.
At engine starting and stopping	Most retarded	To shorten the valve opening overlap in order to prevent the exhaust gas counterflow to intake manifold.	Improvement of start ability

Diagnosis

Diagnosis Table

Refer to “Engine Symptom Diagnosis” in Section 6.

Compression Check

Check compression pressure on all 4 cylinders as follows:

1) Warm up engine to normal operating temperature.
2) Stop engine after warming up.

NOTE:

After warming up engine, place transaxle gear shift lever in “Neutral” (shift selector lever to “P” range for A/T model), and set parking brake and block drive wheels.

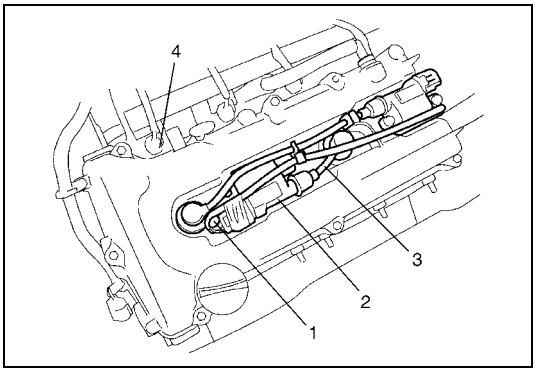

3) Disconnect ignition coil couplers (1).
4) Remove ignition coil assemblies (2) with high-tension cord (3).
5) Remove all spark plugs.
6) Disconnect fuel injector wires (4) at the coupler.

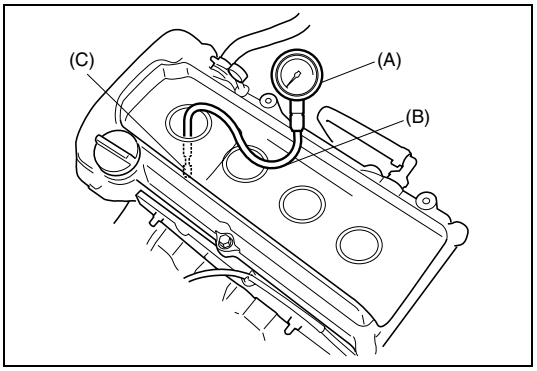

7) Install special tools (compression gauge) into spark plug hole.

Special tool
(A) : 09915-64512
(B) : 09915-64530
(C) : 09915-67010

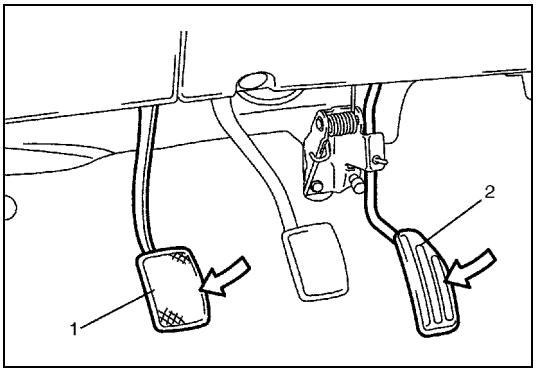

8) Disengage clutch (1) (to lighten starting load on engine) for M/T vehicle, and depress accelerator pedal (2) all the way to make throttle fully open.
9) Crank engine with fully charged battery, and read the highest pressure on compression gauge.

NOTE:

- **For measuring compression pressure, crank engine at least 250 rpm by using fully charged battery.**
- **If measured compression pressure is lower than limit value, check installation condition of special tool. If it is properly installed, possibility is compression pressure leakage from where piston ring or valve contact.**

Compression pressure

Standard	**1400 kPa (14.0 kg/cm^2, 199.0 psi)**
Limit	**1100 kPa (11.0 kg/cm^2, 156.0 psi)**
Max. difference between any two cylinders	**100 kPa (1.0 kg/cm^2, 14.2 psi)**

10) Carry out Steps 7) through 9) on each cylinder to obtain 4 readings.

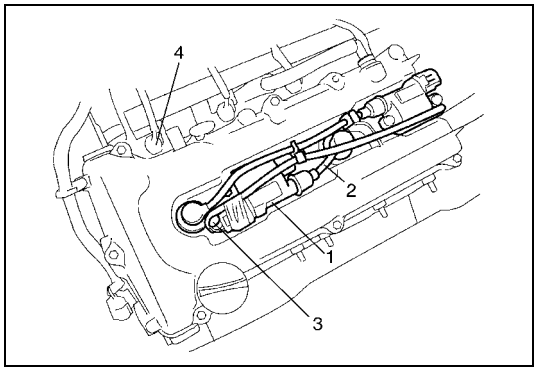

11) After checking, install spark plugs and ignition coil assemblies (1) with high-tension cord (2).
12) Connect ignition coil couplers (3).
13) Connect fuel injector wires(4) at the coupler.

Engine Vacuum Check

The engine vacuum that develops in the intake line is a good indicator of the condition of the engine. The vacuum checking procedure is as follows :

1) Warm up engine to normal operating temperature.

NOTE:

After warming up engine, be sure to place transaxle gear shift lever in "Neutral" (shift selector lever to "P" range for A/T model), and set parking brake and block drive wheels.

2) Stop engine and turn off the all electric switches.

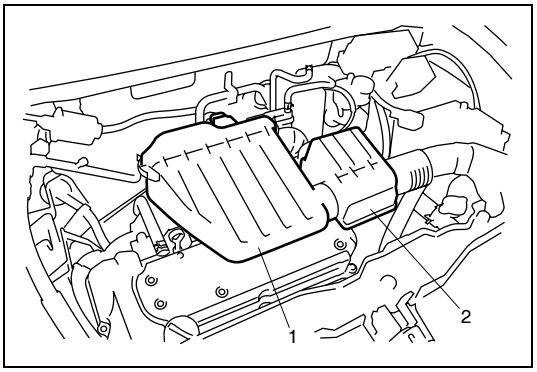

3) Remove air cleaner case (1) and resonator (2).

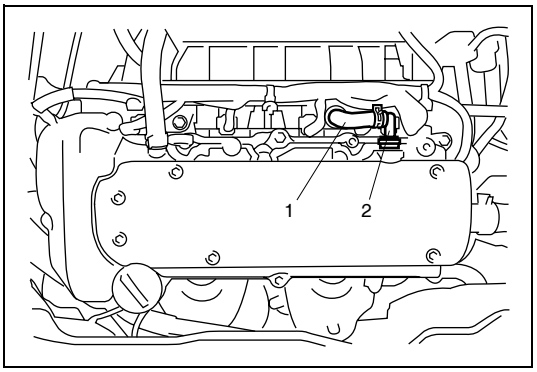

4) Remove PCV hose (1) from PCV valve (2).

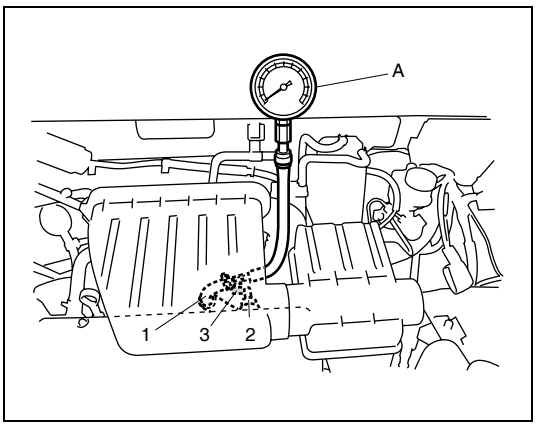

5) Connect special tool (Vacuum gauge) to PCV hose (1).

Special tool
(A) : 09915-67311

6) Blind PCV valve (2) using tape (3) or the like.
7) Install air cleaner case and resonator.
8) Run engine at specified idle speed and read vacuum gauge. Vacuum should be within specification.

Vacuum specification (at sea level)
59 – 73 kPa (45 – 55 cmHg, 17.7 – 21.6 inHg)
at specified idle speed

9) After checking, disconnect special tool (Vacuum gauge) from PCV valve.
10) Detach blind cap from PCV valve.
11) Install air cleaner case and resonator.

Oil Pressure Check

NOTE:

Prior to checking oil pressure, check the following items.

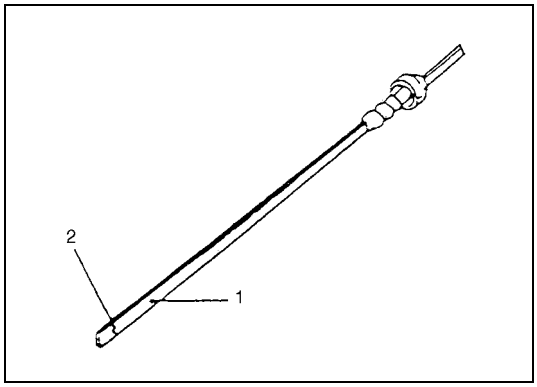

- Oil level in oil pan
  If oil level is low, add oil up to Full level mark (hole) on oil level gauge.
- Oil quality
  If oil is discolored or deteriorated, change it.
  For particular oil to be used, refer to “Engine Oil and Oil Filter Replacement” in Section 0B.

1.	Full level mark (hole)
2.	Low level mark (hole)

- Oil leaks
  If leak is found, repair it.

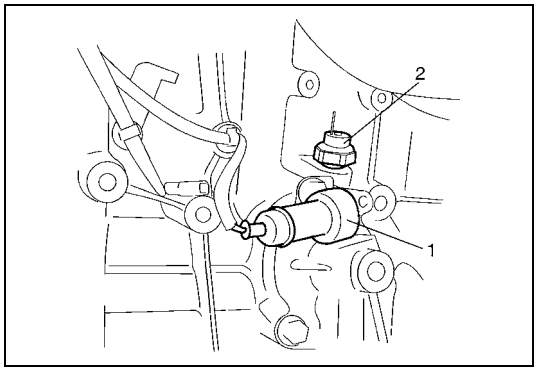

1) Disconnect oil pressure switch coupler (1).
2) Remove exhaust manifold cover, if necessary.
3) Remove oil pressure switch (2) from cylinder block.

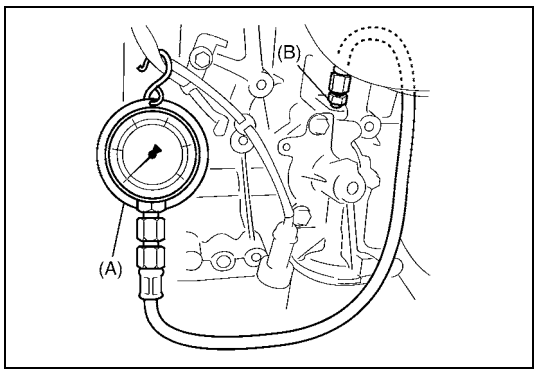

4) Install special tools (Oil pressure gauge) to threaded hole of oil pressure switch.

Special tool
(A) : 09915-77310
(B) : 09915-78211

5) Start engine and warm it up to normal operating temperature.

NOTE:

Be sure to place transaxle gear shift lever in “Neutral” (shift selector lever to “P” range for A/T model), and set parking brake and block drive wheels.

6) After warming up, raise engine speed to 4,000 rpm and measure oil pressure.

Oil pressure specification

More than 270 kPa (2.7 kg/cm^2, 39.8 psi) at 4,000 rpm

7) Stop engine and remove oil pressure gauge and attachment.

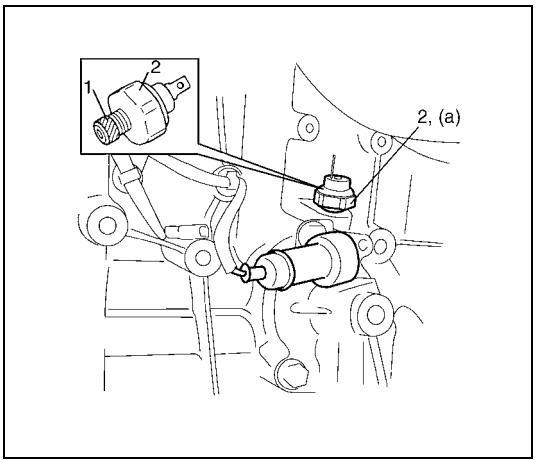

8) Before reinstalling oil pressure switch (2), be sure to wrap its screw threads with sealing tape (1) and tighten switch to specified torque.

NOTE:

If sealing tape edge is bulged out from screw threads of switch, cut it off.

Tightening torque

Oil pressure switch (a) : 14 N·m (1.4 kg-m, 10.5 lb-ft)

9) Start engine and check oil pressure switch (2) for oil leakage. If oil leakage is found, repair it.

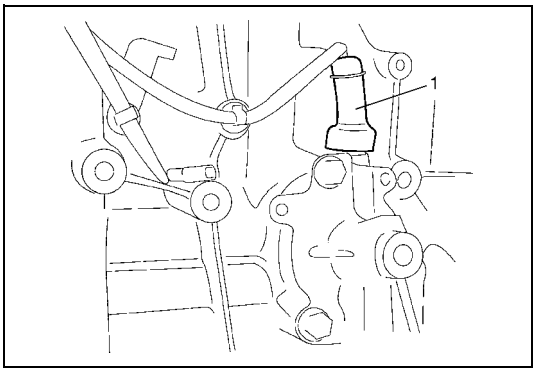

10) Connect oil pressure switch coupler and fit cover (1) firmly.

Valve Lash (Clearance) Inspection

1) Remove negative cable at battery.
2) Remove cylinder head cover referring to “Cylinder Head Cover Removal and Installation” in this section.
3) Remove right side engine under cover, if necessary.

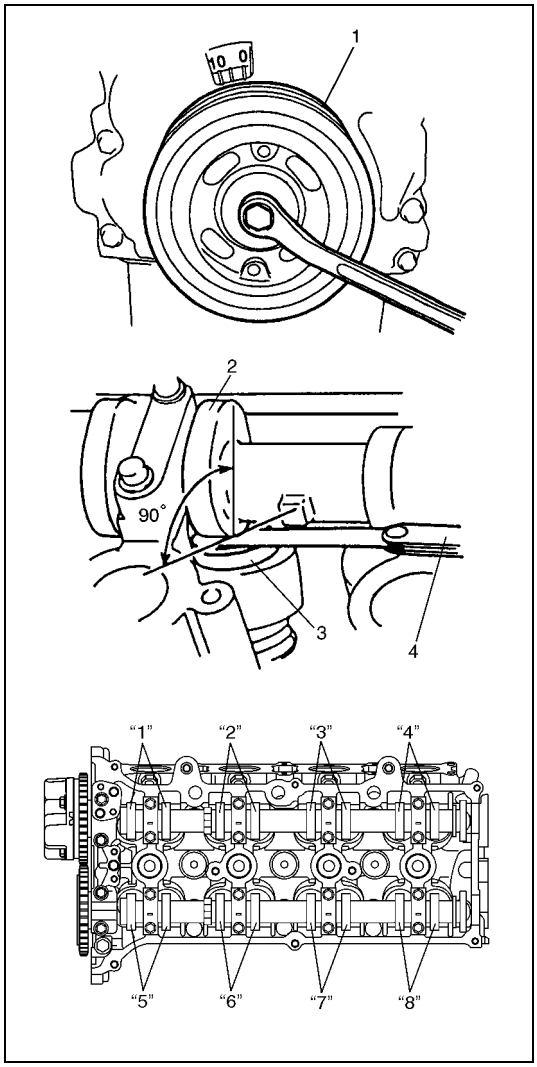

4) Using 17 mm wrench, turn crankshaft pulley (1) clockwise until cam lobes (2) become perpendicular to shim faces (3) at valves “1” and “7” as shown in figure.
5) Check valve lashes with thickness gauge (4) according to the following procedure.
   a) Check valve lashes at valves “1” and “7”.
   b) Turn camshafts by 90° (by turning crankshaft with wrench).
   c) Make sure that cam lobes (2) are perpendicular to shim faces (3) at valves to be checked (in this case, “3” and “8”), if not, adjust it by turning crankshaft. Check valve lashes.
   d) In the same manner as b) – c), check valve lashes at valves “4” and “6”.
   e) In the same manner as b) – c) again, check valve lashes at valves “2” and “5”.

If valve lash is out of specification, record valve lash and adjust it to specification referring to “Shim Replacement” in this section.

Valve clearance specification

	When cold (Coolant temperature is 15 – 25°C (59 – 77°F))	**When hot (Coolant temperature is 60 – 68°C (140 – 154°F))**
Intake	**0.18 – 0.22 mm (0.007 – 0.009 in.)**	**0.21 – 0.27 mm (0.008 – 0.011 in.)**
Exhaust	**0.28 – 0.32 mm (0.011 – 0.013 in.)**	**0.30 – 0.36 mm (0.012 – 0.014 in.)**

Shim Replacement

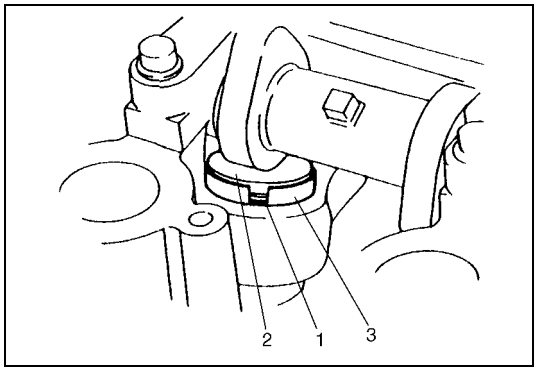

1) Close the valve whose shim (2) is to be replaced by turning crankshaft, then turn tappet (3) till its cut section (1) faces inside as shown in figure.
2) Lift down the valve by turning crankshaft to 360°.
3) Hold tappet at that position using special tool as follows.
   a) Remove its housing bolts.

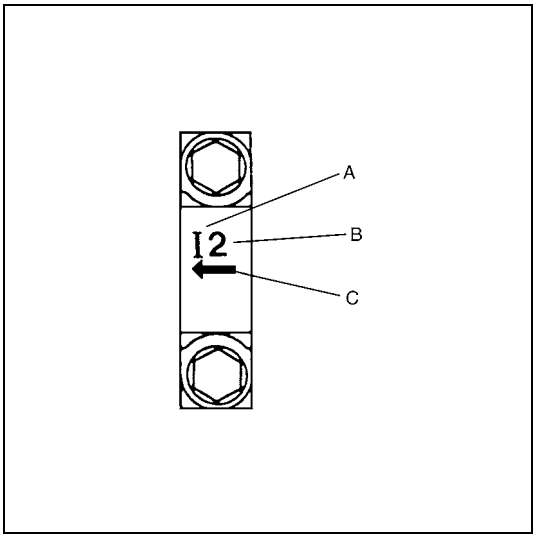

b) Check housing No. and select special tool corresponding to housing No. referring to “the following table”.

Special tool selection table

No. on camshaft housing	Embossed mark on special tool
I2	IN2
I3, I4, I5	IN345
E2	EX2
E3, E4, E5	EX345

A: I : Intake side or E : Exhaust side
B: Position from timing chain side
C: Pointing to timing chain side

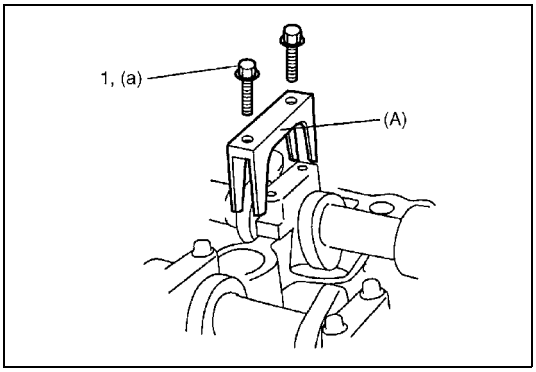

c) Hold down the tappet so as not to contact the shim by installing special tool on camshaft housing with housing bolt (1) tighten housing bolts to specified torque.

Special tool
(A) : 09916-67020 or 09916-67021

Tightening torque
Camshaft housing bolts (for tightening of special tool)
(a) : 8 N·m (0.8 kg-m, 6.0 lb-ft)

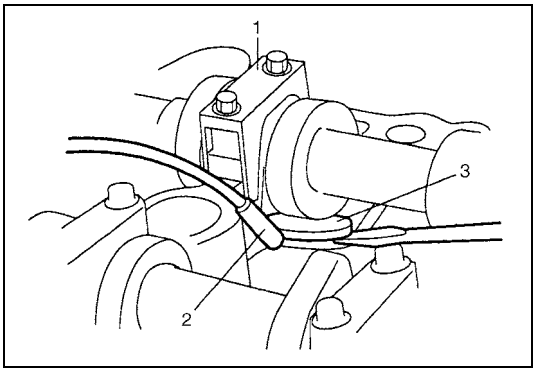

4) Turn camshaft by approximately 90° clockwise and remove shim (3).

WARNING:
Never put in the hand between cam shaft and tappet.

1. Special tool
2. Magnet

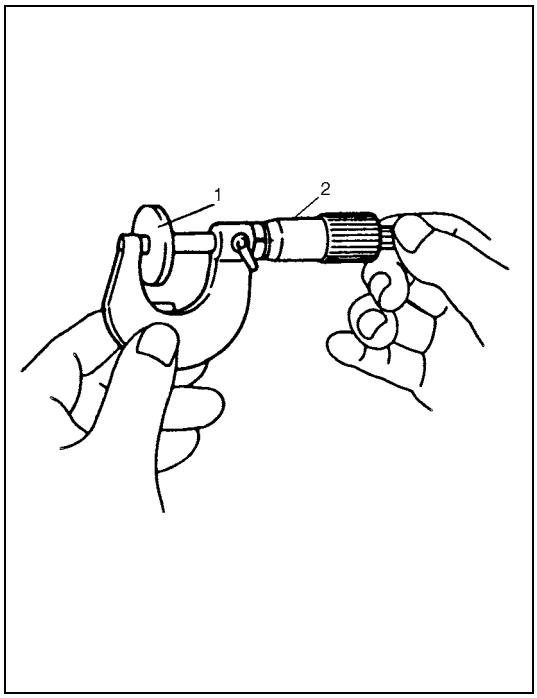

5) Using a micrometer (2), measure the thickness of the removed shim (1), and determine replacement shim by calculating the thickness of new shim with the following formula and table.

Intake side:
A = B + C – 0.20 mm (0.008 in.)
Exhaust side:
A = B + C – 0.30 mm (0.012 in.)

A : Thickness of new shim
B : Thickness of removed shim
C : Measured valve clearance

For example of intake side :
When thickness of removed shim is 2.40 mm (0.094 in.), and measured valve clearance is 0.45 mm (0.018 in.).
A = 2.40 mm (0.094 in.) + 0.45 mm (0.018 in.) – 0.20 mm (0.008 in.) = 2.65 mm (0.104 in.)
Calculated thickness of new shim = 2.65 mm (0.104 in.)

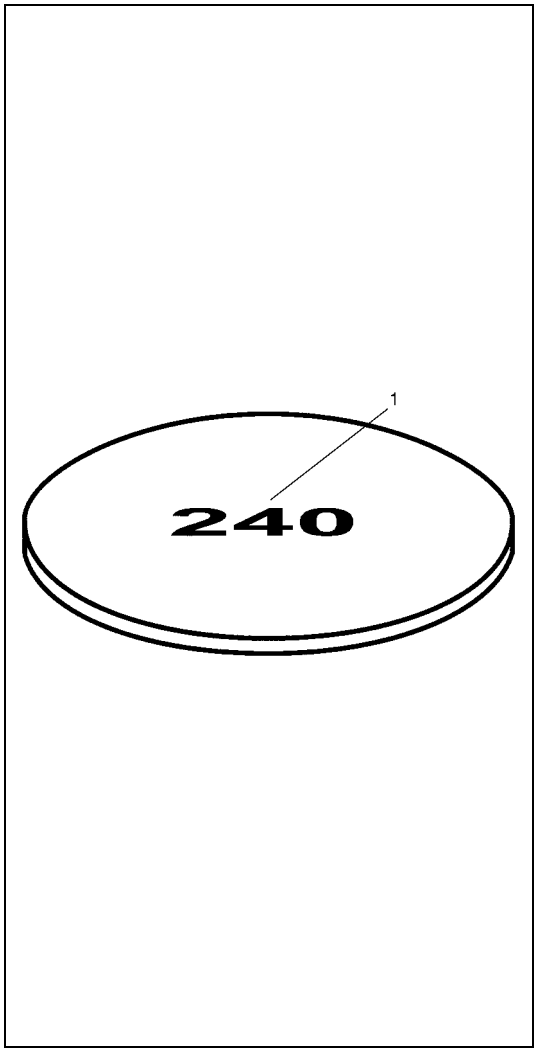

6) Select new shim No. (1) with a thickness as close as possible to calculated value.

Available new shims No.

Thickness mm (in.)	Shim No.	Thickness mm (in.)	Shim No.
2.175 (0.0856)	218	2.675 (0.1053)	268
2.200 (0.0866)	220	2.700 (0.1063)	270
2.225 (0.0876)	223	2.725 (0.1073)	273
2.250 (0.0886)	225	2.750 (0.1083)	275
2.275 (0.0896)	228	2.775 (0.1093)	278
2.300 (0.0906)	230	2.800 (0.1102)	280
2.325 (0.0915)	233	2.825 (0.1112)	283
2.350 (0.0925)	235	2.850 (0.1122)	285
2.375 (0.0935)	238	2.875 (0.1132)	288
2.400 (0.0945)	240	2.900 (0.1142)	290
2.425 (0.0955)	243	2.925 (0.1152)	293
2.450 (0.0965)	245	2.950 (0.1161)	295
2.475 (0.0974)	248	2.975 (0.1171)	298
2.500 (0.0984)	250	3.000 (0.1181)	300
2.525 (0.0994)	253		
2.550 (0.1004)	255		
2.575 (0.1014)	258		
2.600 (0.1024)	260		
2.625 (0.1033)	263		
2.650 (0.1043)	265		

7) Install new shim facing shim No. side with tappet.

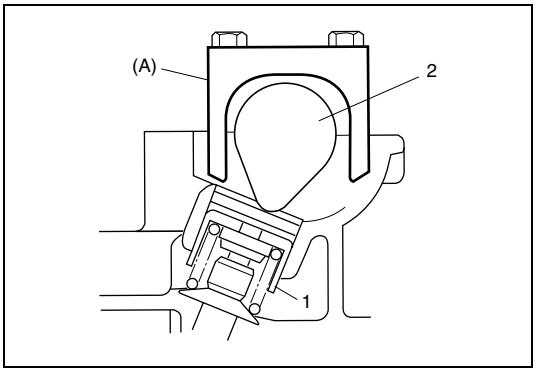

8) Lift valve by turning crankshaft counterclockwise (in opposite direction against above Step 4) and remove special tool.

Special tool
(A) : 09916-67020 or 09916-67021

1.	Tappet
2.	Camshaft

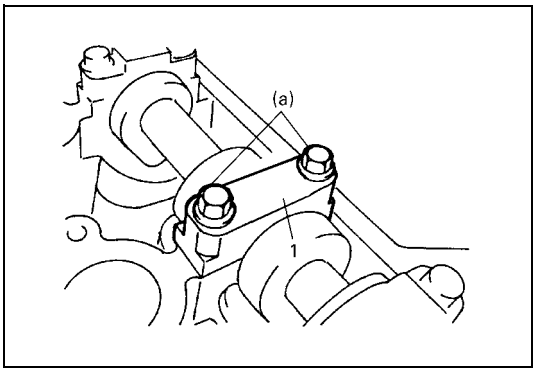

9) Install camshaft housing (1) and tighten bolts to specified torque.

Tightening torque
Camshaft housing bolts (a) : 11 N·m (1.1 kg-m, 8.0 lb-ft)

10) Check valve clearance again after adjusting it.
11) After checking and adjusting all valves.
12) Install cylinder head cover referring to “Cylinder Head Cover Removal and Installation” in this section.

On-Vehicle Service

Air Cleaner Element Removal and Installation

Removal

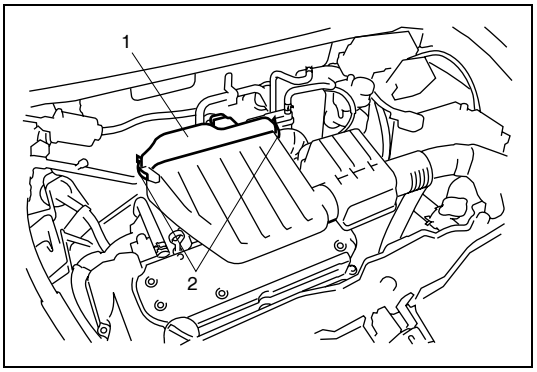

1) Open air cleaner case (1) by unhooking its clamps (2).
2) Remove air cleaner element from case.

Installation

Reverse removal procedure for installation.

Air Cleaner Element Inspection and Cleaning

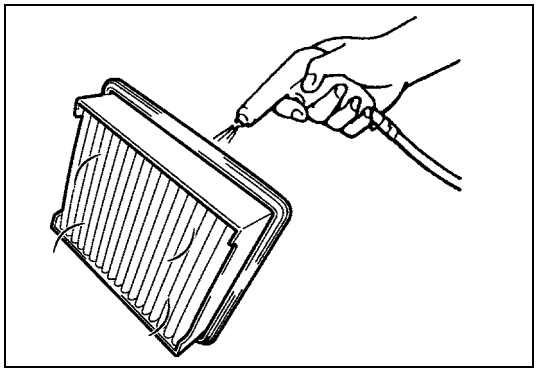

- Check air cleaner element for dirt. Replace excessively dirty element.
- Blow off dust by compressed air from air outlet side of element.

Knock Sensor Removal and Installation

Refer to “Knock sensor removal and installation” in Section 6E1.

Cylinder Head Cover Removal and Installation

Removal

1) Disconnect negative cable at battery.

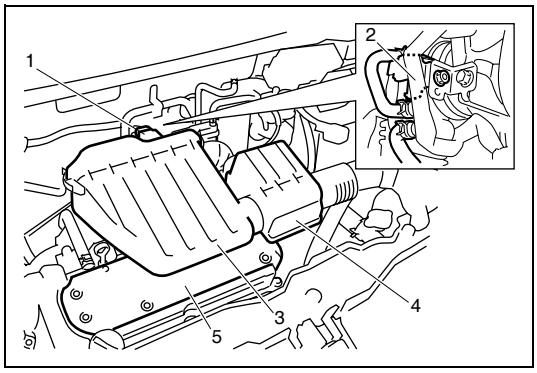

2) Disconnect MAF sensor coupler (1).
3) Remove EVAP canister purge valve (2).
4) Remove air cleaner case (3) and resonator (4).
5) Remove cylinder head upper cover (5).

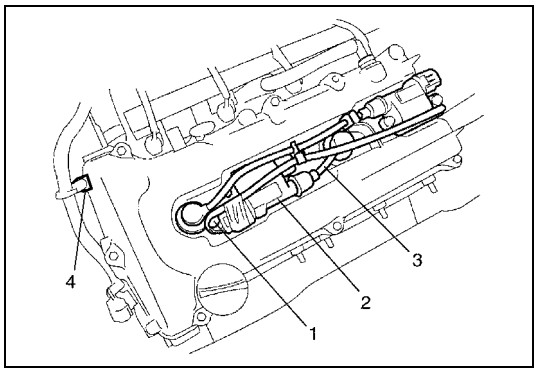

6) Disconnect ignition coil couplers (1).
7) Remove ignition coil assemblies (2) with high-tension cord (3).
8) Remove wire harness clamp (4) from cylinder head cover.

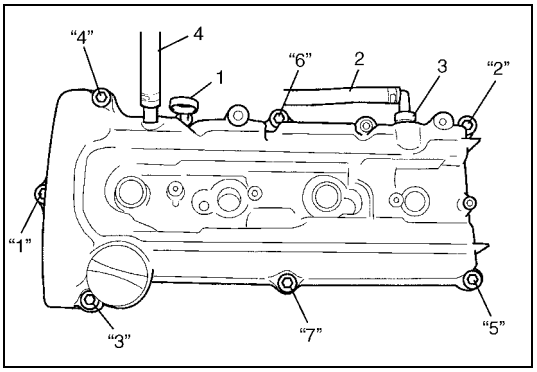

9) Remove oil level gauge (1).
10) Disconnect PCV hose (2) from PCV valve (3) and disconnect breather hose (4) from cylinder head cover.
11) Remove cylinder head cover mounting bolts in such order as indicated in figure.

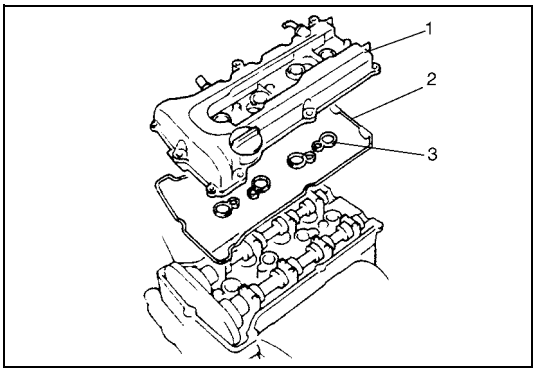

12) Remove cylinder head cover (1) with cylinder head cover gasket (2) and spark plug hole gasket (3).

Installation

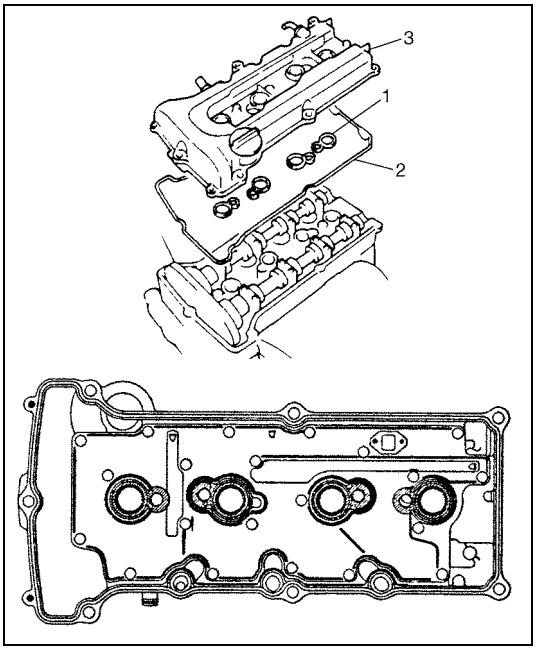

1) Install new spark plug hole gaskets (1) and new cylinder head cover gasket (2) to cylinder head cover (3) as shown in figure.

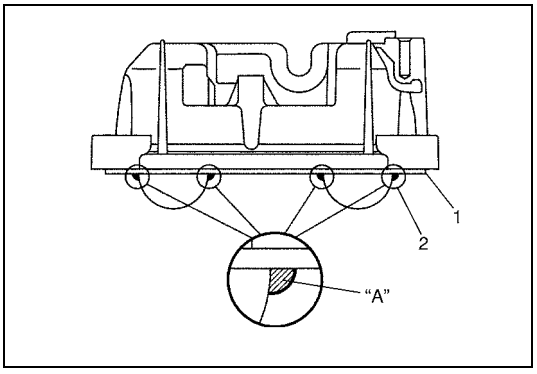

2) Remove oil, old sealant and dust from sealing surface on cylinder head and cover. After cleaning, apply sealant "A" to the following point.
   - Cylinder head cover gasket (1) sealing surface area (2) as shown.

"A" : Sealant 99000-31250

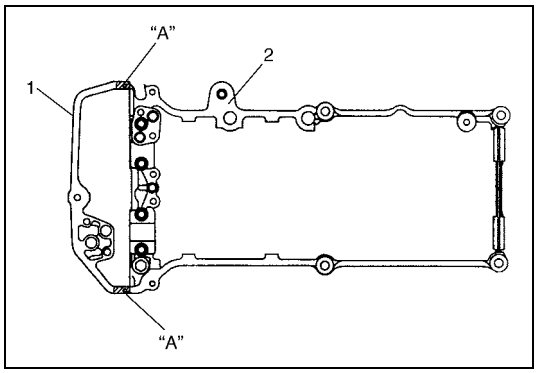

- Timing chain cover (1) and cylinder head (2) mating surface as shown.

"A" : Sealant 99000-31250

3) Install cylinder head cover to cylinder head.

NOTE:

When installing cylinder head cover, use care so that cylinder head cover gasket or spark plug hole gaskets will not get out of place or fall off.

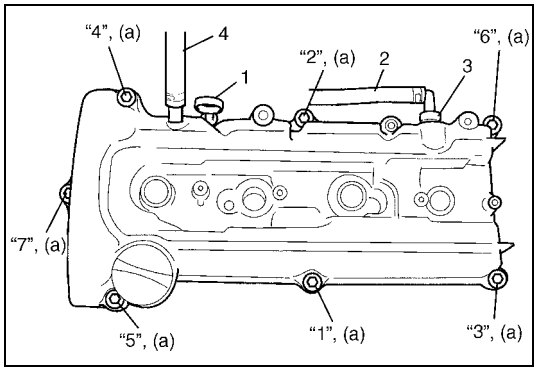

4) Tighten bolts in such order as indicated in figure a little at a time till they are tightened to specified torque.

Tightening torque
Cylinder head cover bolts (a) : 8 N·m (0.8 kg-m, 6.0 lb-ft)

5) Connect PCV hose (2) to PCV valve (1).
6) Connect breather hose (4).
7) Install oil level gauge (3).

8) Install wire harness clamp to cylinder head cover.
9) Install ignition coil assemblies with high-tension cord.
10) Connect ignition coil couplers and clamp harness securely.
11) Install cylinder head upper cover.
12) Install air cleaner case and resonator.
13) Connect negative cable at battery.

Throttle Body and Intake Manifold Components

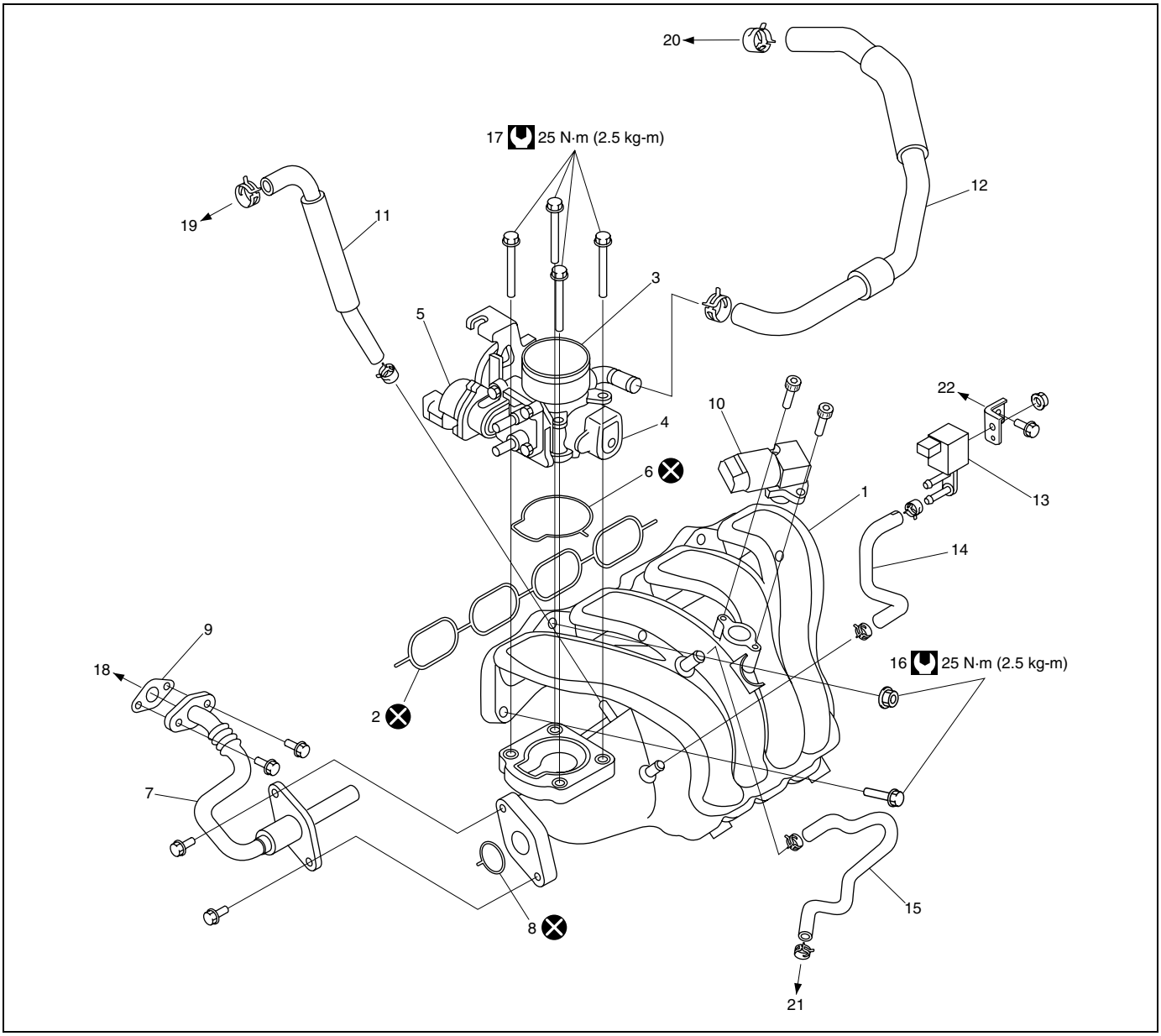

1. Intake manifold	7. EGR pipe	13. EVAP canister purge valve	19. To PCV valve
2. Intake manifold O-Ring	8. O-Ring	14. EVAP canister purge valve hose	20. To cylinder head cover
3. Throttle body	9. Gasket	15. Brake booster hose	21. To brake booster
4. TP sensor	10. MAP sensor	16. Intake manifold mounting bolt and nut	22. To air cleaner case
5. IAC valve	11. PCV valve hose	17. Throttle body mounting bolt	Tightening torque
6. O-Ring	12. Breather hose	18. To EGR valve	Do not reuse.

Throttle Body Removal and Installation

Removal

1) Relieve fuel pressure referring to “Fuel pressure relief procedure” in Section 6.
2) Disconnect negative cable at battery.

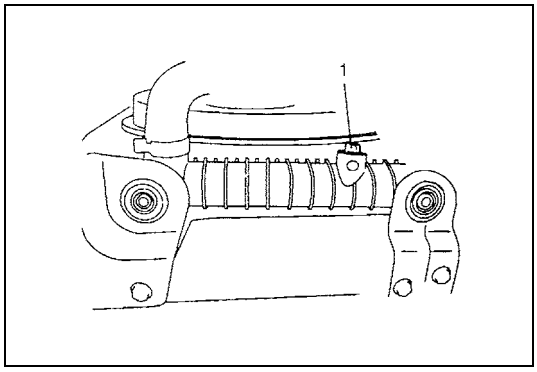

3) Drain coolant by loosening drain plug (1).

WARNING:

To help avoid danger of being burned, do not remove drain plug (1) and radiator cap while engine and radiator are still hot. Scalding fluid and steam can be blown out under pressure if plug and cap are taken off too soon.

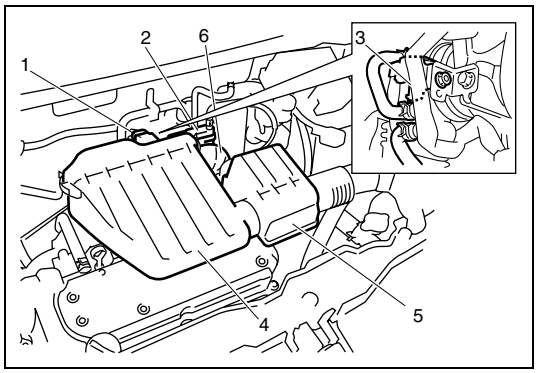

4) Disconnect MAF sensor coupler (1).
5) Remove EVAP canister purge valve chamber (2) from air cleaner outlet hose.
6) Remove EVAP canister purge valve (3).
7) Remove air cleaner case (4) and resonator (5).
8) Remove air cleaner outlet hose (6).

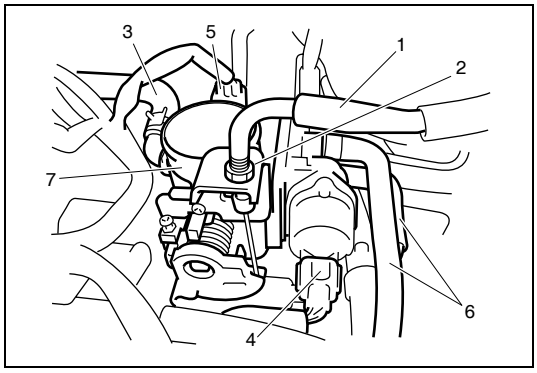

9) Remove accelerator cable (1) by loosening lock nut (2).
10) Disconnect breather hose (3) and water hoses (6) from throttle body.
11) Disconnect IAC valve coupler (4) and TP sensor coupler (5).
12) Remove throttle body (7) from intake manifold.

Installation

Reverse removal procedure for installation noting the followings.

- Use new throttle body O-ring.
- Check to ensure that all removed parts are back in place. Reinstall any necessary parts which have not been reinstalled.
- Adjust accelerator cable play referring to “Accelerator cable adjustment” in Section 6E1.
- Refill cooling system referring to “Cooling System Flush and Refill” in Section 6B.
- Upon completion of installation, turn ignition switch ON but engine OFF and check for fuel leaks.
- Finally, start engine and check for engine coolant leaks.

Intake Manifold Removal and Installation

Removal

1) Remove throttle body referring to “Throttle Body Removal and Installation” in this section.

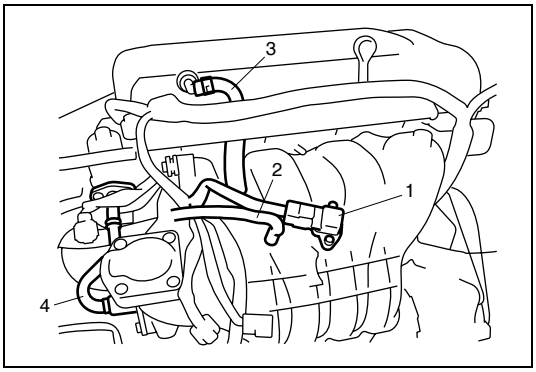

2) Disconnect MAP sensor coupler (1).
3) Disconnect the following hoses :
   - Brake booster hose (2) from cylinder head cover
   - PCV hose (3) from PCV valve
4) Disconnect EGR pipe (4) from EGR valve.

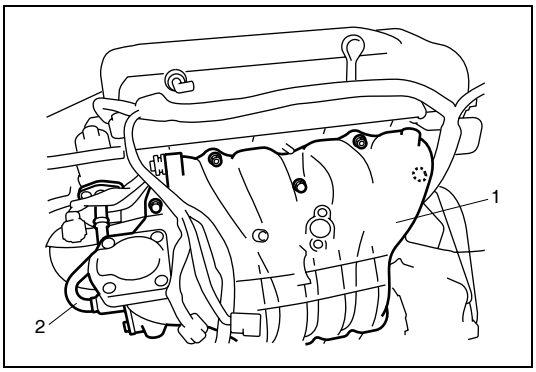

5) Remove intake manifold (1) and EGR pipe (2) from cylinder head, and then remove its gasket and O-ring.

Installation

Reverse removal procedure for installation noting the followings.

- Use new intake manifold O-ring.
- Use new EGR pipe gasket and O-ring.

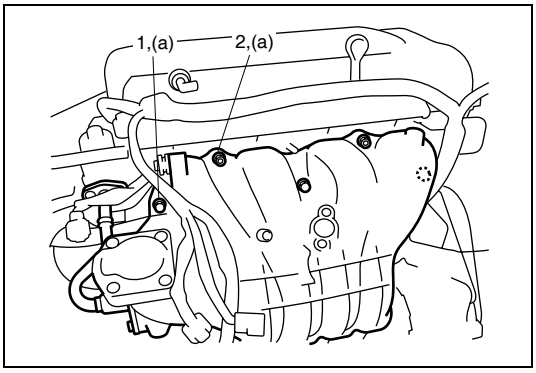

- Tighten bolts (1) and nuts (2) to specified torque.

Tightening torque
Intake manifold bolts and nuts
(a) : 25 N·m (2.5 kg-m, 18.0 lb-ft)

- Check to ensure that all removed parts are back in place. Reinstall any necessary parts which have not been reinstalled.
- Adjust accelerator cable play referring to “Accelerator cable adjustment” in Section 6E1.
- Refill cooling system referring to “Cooling System Flush and Refill” in Section 6B.
- Upon completion of installation, turn ignition switch ON but engine OFF and check for fuel leaks.
- Finally, start engine and check for engine coolant leaks.

Exhaust Manifold Components

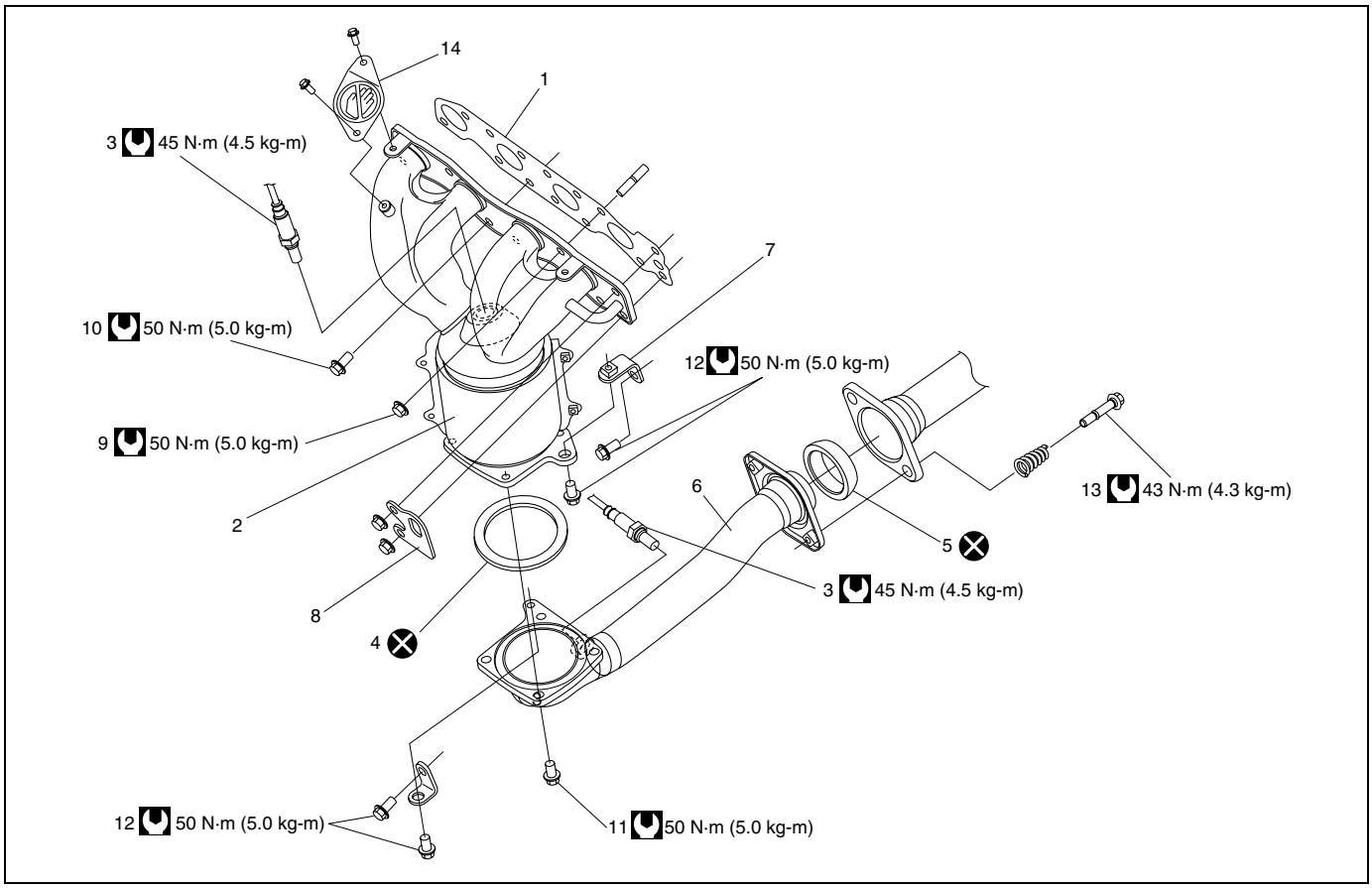

1. Exhaust manifold gasket	7. Exhaust manifold stiffener	13. Exhaust pipe No.2 bolt
2. Exhaust manifold	8. Engine hook	14. Caution plate
3. Exhaust oxygen sensor	9. Exhaust manifold mounting nut	Tightening torque
4. Exhaust pipe gasket	10. Exhaust manifold mounting bolt	Do not reuse.
5. Seal ring No.1	11. Exhaust pipe No.1 bolt	
6. Exhaust No.1 pipe	12. Exhaust manifold stiffener bolt	

Exhaust Manifold Removal and Installation

WARNING:

To avoid danger of being burned, do not service exhaust system while it is still hot. Service should be performed after system cools down.

Removal

1) Disconnect negative cable at battery.
2) Remove front bumper with front grille referring to “Front Bumper and Rear Bumper Removal and Installation” in Section 9.
3) Remove radiator referring to “Radiator Removal and Installation” in Section 6B for equipped with A/C.
4) With hose connected, detach A/C condenser from vehicle body for equipped with A/C.

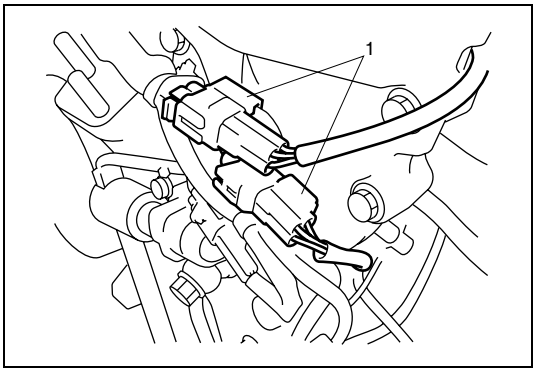

5) Disconnect heated oxygen sensor coupler (1) and detach it from its stay.

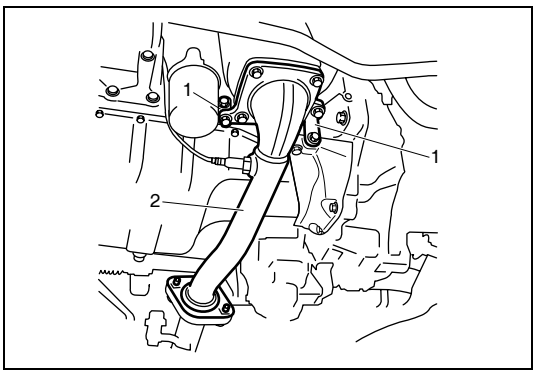

6) Remove exhaust manifold stiffener (1).
7) Disconnect exhaust No.1 pipe (2) from exhaust manifold.

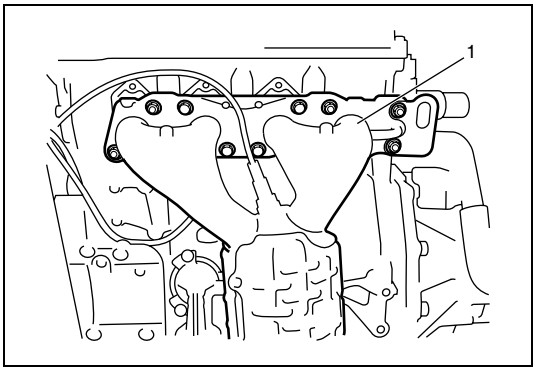

8) Remove exhaust manifold (1) and its gasket from cylinder head.

Installation

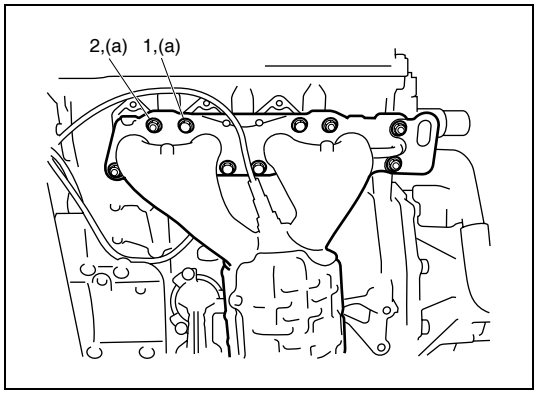

1) Install new gasket to cylinder head.
   Then install exhaust manifold.
   Tighten manifold bolts (1) and nuts (2) to specified torque.

Tightening torque
Exhaust manifold bolts and nuts
(a) : 50 N·m (5.0 kg-m, 36.5 lb-ft)

NOTE:
The figure on the left varies with specification.

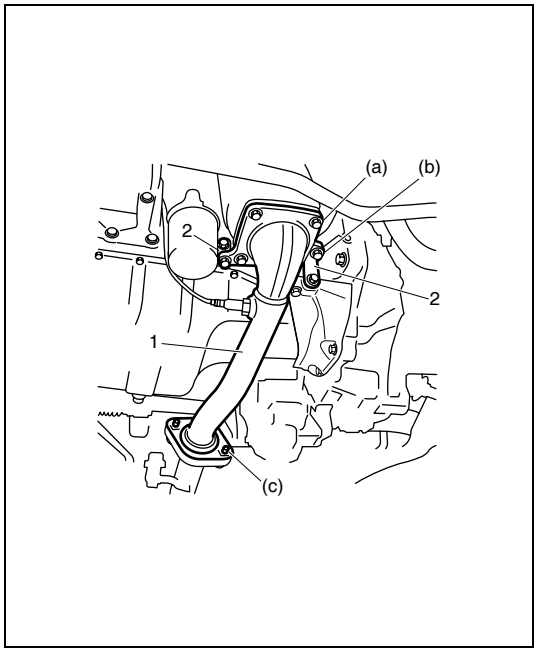

2) Install new seal ring and connect exhaust No.1 pipe (1) to exhaust manifold.
   Tighten pipe fasteners to specified torque.

Tightening torque
Exhaust No.1 pipe bolts (a) : 50 N·m (5.0 kg-m, 36.5 lb-ft)

3) Install exhaust manifold stiffener (2).
   Tighten exhaust manifold stiffener bolts to specified torque.

Tightening torque
Exhaust manifold stiffener bolts
(b) : 50 N·m (5.0 kg-m, 36.5 lb-ft)

4) Install new seal ring and connect exhaust No.1 pipe (1) to exhaust No.2 pipe.
   Tighten pipe fasteners to specified torque.

Tightening torque
Exhaust No.2 pipe bolts (c) : 43 N·m (4.3 kg-m, 31.5 lb-ft)

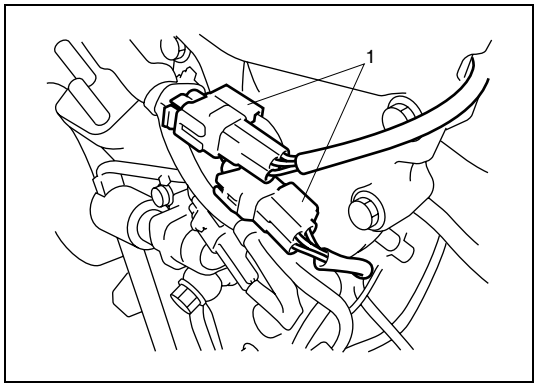

5) Connect heated oxygen sensor coupler (1) and fit coupler to bracket securely.
6) Install A/C condenser to vehicle body for equipped with A/C.
7) Install radiator referring to “Radiator Removal and Installation” in Section 6B for equipped with A/C.
8) Install front bumper with front grille by referring to “Front Bumper and Rear Bumper Removal and Installation” in Section 9.
9) Connect negative cable to battery.
10) Check exhaust system for exhaust gas leakage.

Oil Pan and Oil Pump Strainer Components

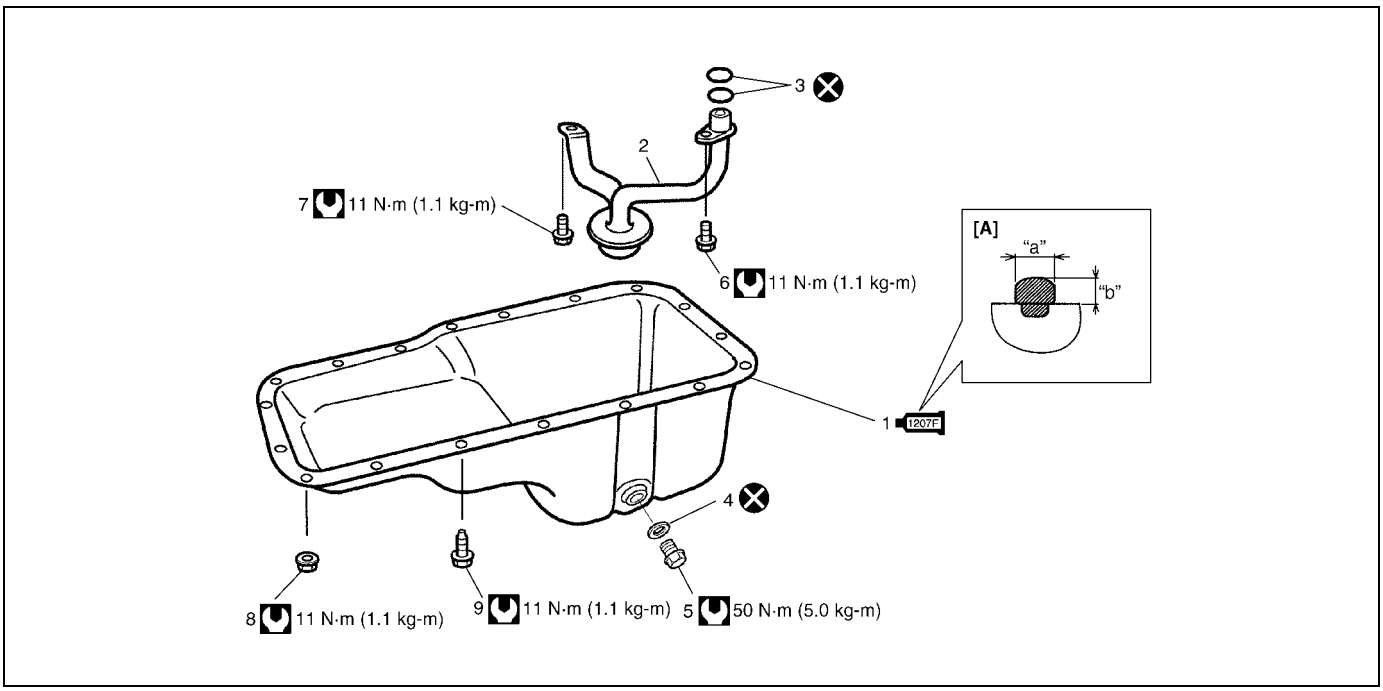

[A] : Sealant application amount	3. O-ring	8. Oil pan nut
"a" : 3 mm (0.12 in.)	4. Gasket	9. Oil pan bolt
"b" : 2 mm (0.08 in.)	5. Drain plug	Tightening torque
1207F 1. Oil pan : Apply sealant 99000-31250 to mating surface.	6. Strainer bolt	Do not reuse.
2. Strainer	7. Bracket bolt	

Oil Pan and Oil Pump Strainer Removal and Installation

Removal

1) Remove oil level gauge.
2) Drain engine oil by removing drain plug.

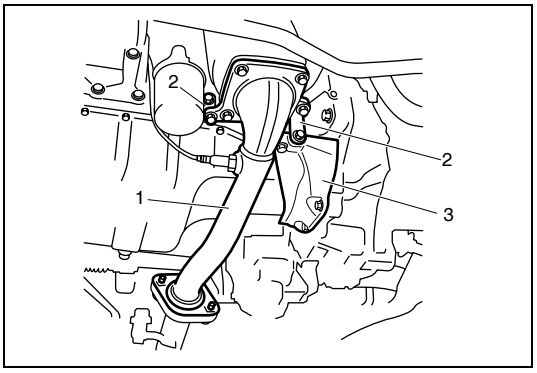

3) Remove exhaust No.1 pipe (1), exhaust manifold stiffener (2) and transaxle stiffener (3).
4) For 2WD vehicle, remove engine rear mounting bracket.
5) For 4WD vehicle, remove transfer referring to "Transfer Dismounting and Mounting" in Section 7D.

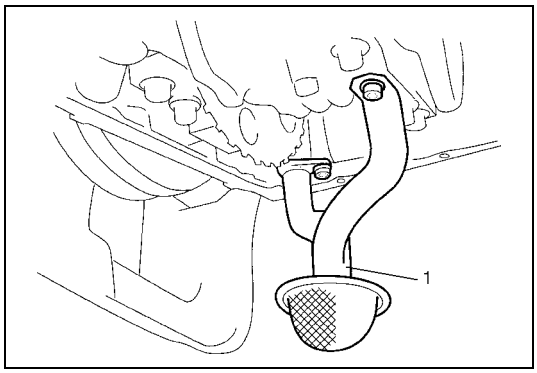

2) Remove oil pan and then oil pump strainer (1) from cylinder block.

Installation

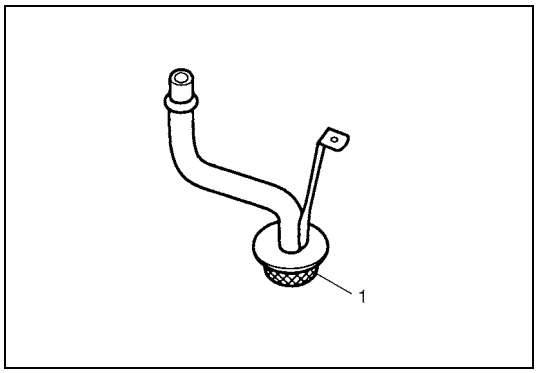

1) Clean oil pump strainer screen (1).

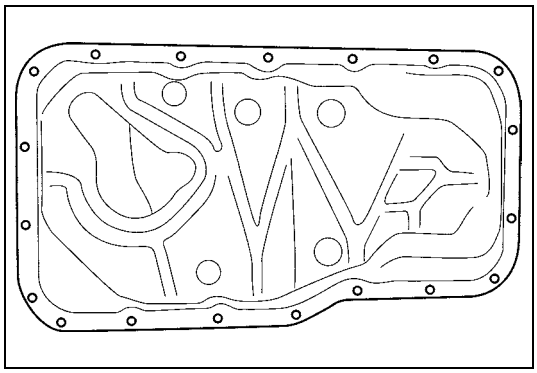

2) Clean sealing surface on oil pan and cylinder block. Remove oil, old sealant and dust from sealing surface.

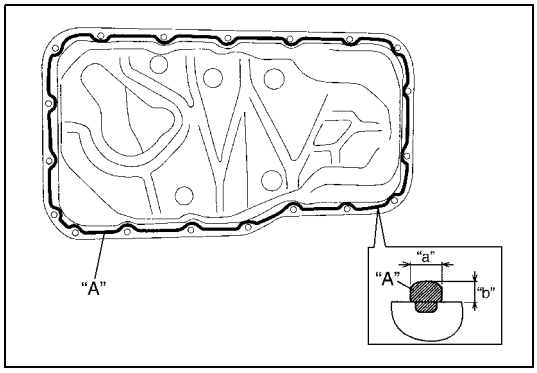

3) Apply sealant continuously to oil pan mating surface as shown in figure.

"A" : sealant 99000-31250

Sealant amount for oil pan
Width "a" : 3 mm (0.12 in.)
Height "b" : 2 mm (0.08 in.)

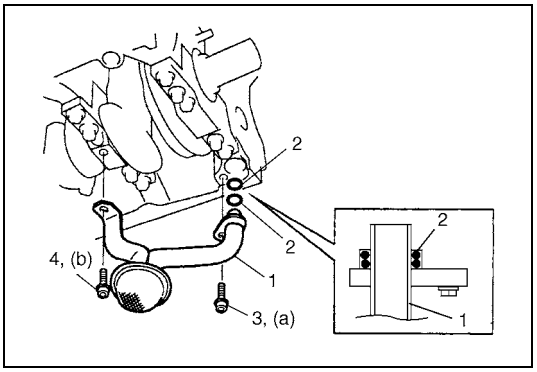

4) Install new O-rings (2) in the position as shown in figure and install oil pump strainer (1).
Tighten strainer bolt (3) first and then bracket bolt (4) to specified torque.

Tightening torque
Oil pump strainer bolt (a) : 11 N·m (1.1 kg-m, 8.0 lb-ft)
Oil pump strainer bracket bolt
(b) : 11 N·m (1.1 kg-m, 8.0 lb-ft)

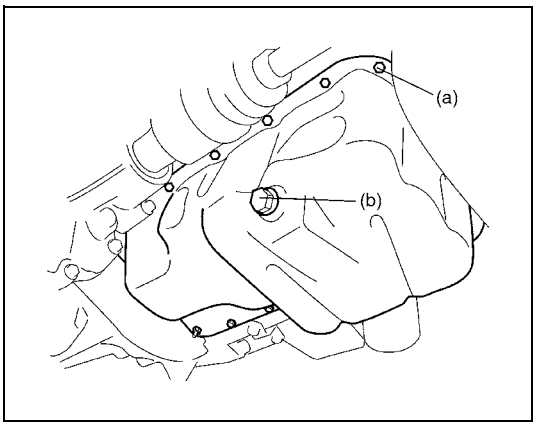

5) After fitting oil pan to cylinder block, run in securing bolts and start tightening at the center :
move wrench outward, tightening one bolt at a time. Tighten bolts and nuts to specified torque.

Tightening torque
Oil pan bolts and nuts (a) : 11 N·m (1.1 kg-m, 8.0 lb-ft)

6) Install new gasket and drain plug to oil pan.
Tighten drain plug to specified torque.

Tightening torque
Oil pan drain plug bolt (b) : 50 N·m (5.0 kg-m, 36.5 lb-ft)

7) For 2WD vehicle, install Engine rear mounting bracket.
8) For 4WD vehicle, install transfer referring to “Transfer Dismounting and Mounting” in Section 7D.

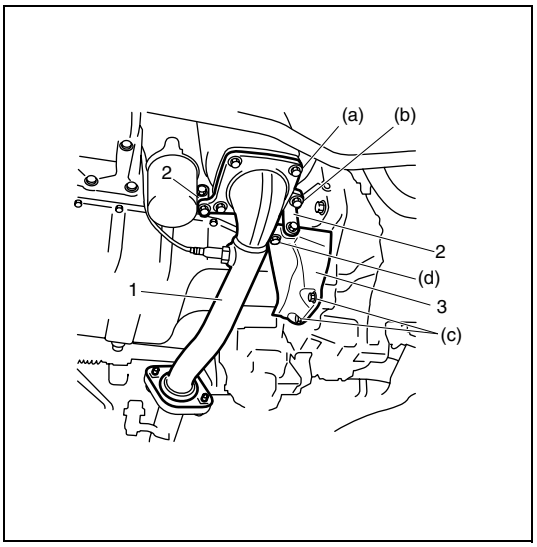

9) Install transaxle stiffener (3).
Tighten transaxle stiffener bolts (c) first and next (d) with specified torque.

Tightening torque
Transaxle stiffener bolts (c and d) :
50 N·m (5.0 kg-m, 36.5 lb-ft)

10) Install exhaust manifold stiffener (2) and exhaust No.1 pipe (1).
Tighten bolts to specified torque.

Tightening torque
Exhaust No.1 pipe bolts (a) : 50 N·m (5.0 kg-m, 36.5 lb-ft)
Exhaust manifold stiffener bolts (b) :
50 N·m (5.0 kg-m, 36.5 lb-ft)

11) Install oil level gauge.
12) Refill engine with engine oil referring to “Engine Oil and Oil Filter Replacement” in Section 0B.
13) Verify that there is no engine oil leakage and exhaust gas leakage at each connection.

Engine Mountings Components

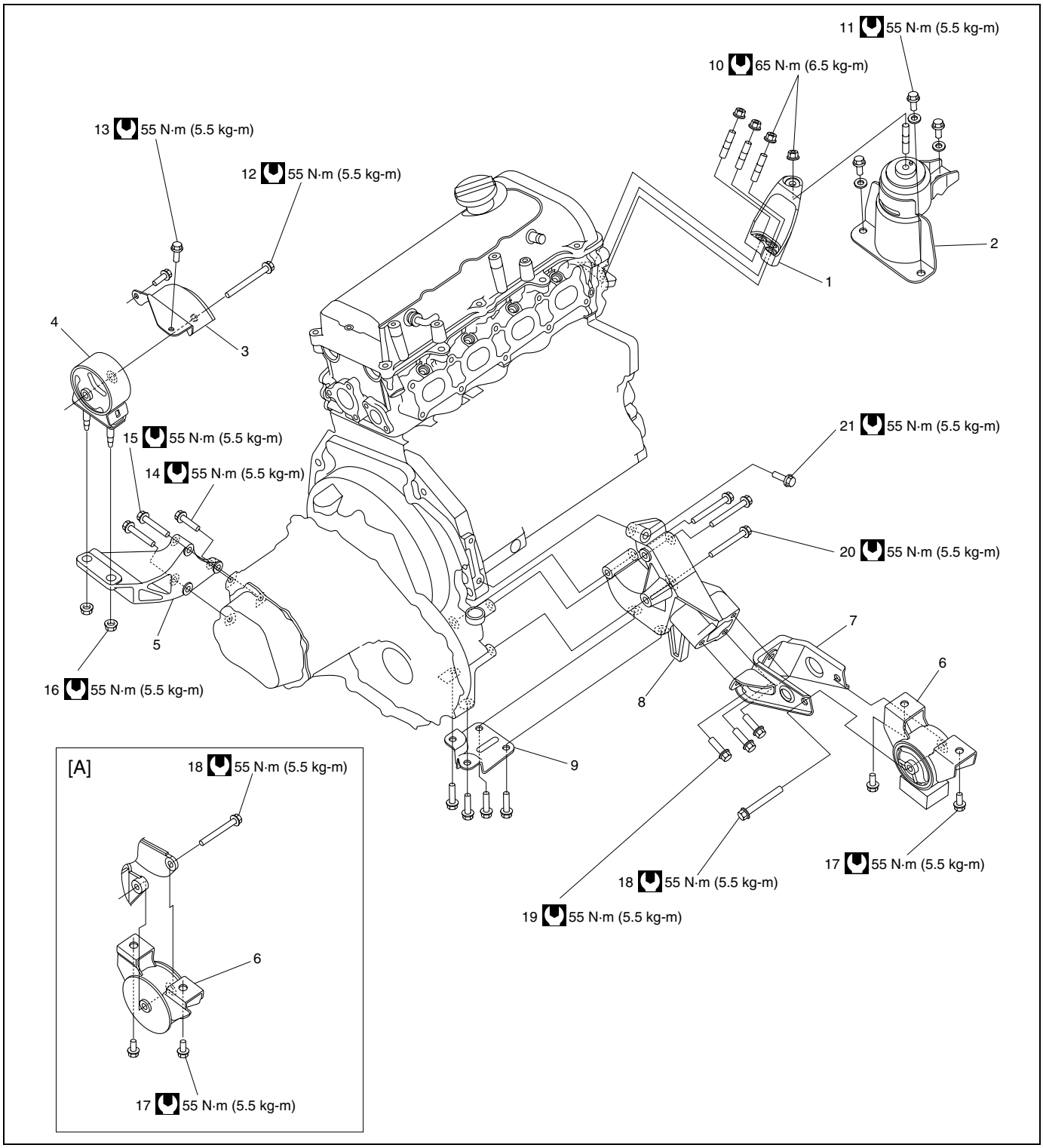

[A] : 4WD MODEL	8. Engine rear mounting No.2 bracket	16. Engine left mounting bracket nut
1. Engine right mounting	9. Engine rear mounting bracket stiffener	17. Engine rear mounting bolt
2. Engine right body side bracket	10. Engine right mounting nut	18. Engine rear mounting bolt
3. Engine left body side bracket	11. Engine right body side bracket bolt	19. Engine rear mounting No.1 bracket bolt
4. Engine left mounting	12. Engine left mounting bolt	20. Engine rear mounting No.2 bracket bolt
5. Engine left mounting bracket	13. Engine left body side bracket bolt	21. Engine rear mounting No.2 bracket bolt
6. Engine rear mounting	14. Engine left mounting bracket bolt (short)	Tightening torque
7. Engine rear mounting No.1 bracket	15. Engine left mounting bracket bolt (long)	

Unit Repair Overhaul

Engine Assembly Removal and Installation

Removal

1) Relieve fuel pressure referring to “Fuel pressure relief procedure” in Section 6.
2) Disconnect negative and positive cables at battery.
3) Remove engine hood after disconnecting windshield washer hose.
4) Remove right and left side engine under covers.
5) Remove A/C compressor belt by referring to “Compressor Assembly Removal and Installation” in Section 1B (if equipped).
6) Drain engine oil referring to “Engine Oil and Oil Filter Replacement” in Section 0B.
7) Drain transaxle oil referring to “Manual Transaxle Oil Change” in Section 7A1.
8) Drain transfer oil referring to “Transfer Oil Change” in Section 7D (for 4WD vehicle).

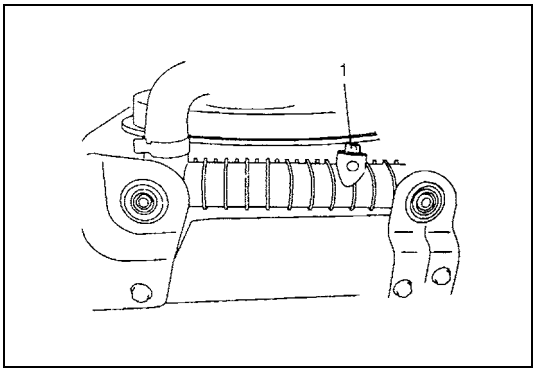

9) Drain coolant by referring to “Cooling System Flush and Refill” in Section 6B.

WARNING:

To help avoid danger of being burned, do not remove drain plug (1) and radiator cap while engine and radiator are still hot. Scalding fluid and steam can be blown out under pressure if plug and cap are taken off too soon.

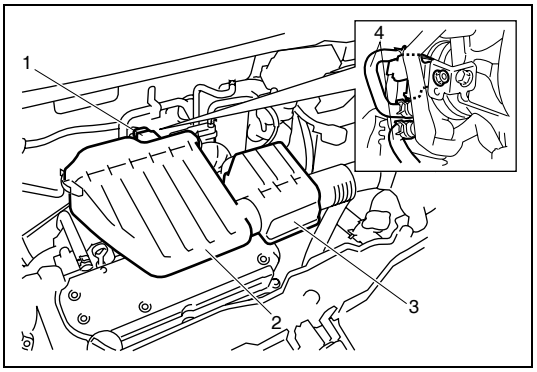

10) Disconnect MAF sensor coupler (1).
11) Remove air cleaner case (2) and resonator (3).
12) Remove canister purge hose (4) from EVAP canister purge valve.
13) With hose connected, detach A/C compressor from its bracket (if equipped).

NOTE:

Suspend removed A/C compressor at a place where no damage will be caused during removal and installation of engine assembly.

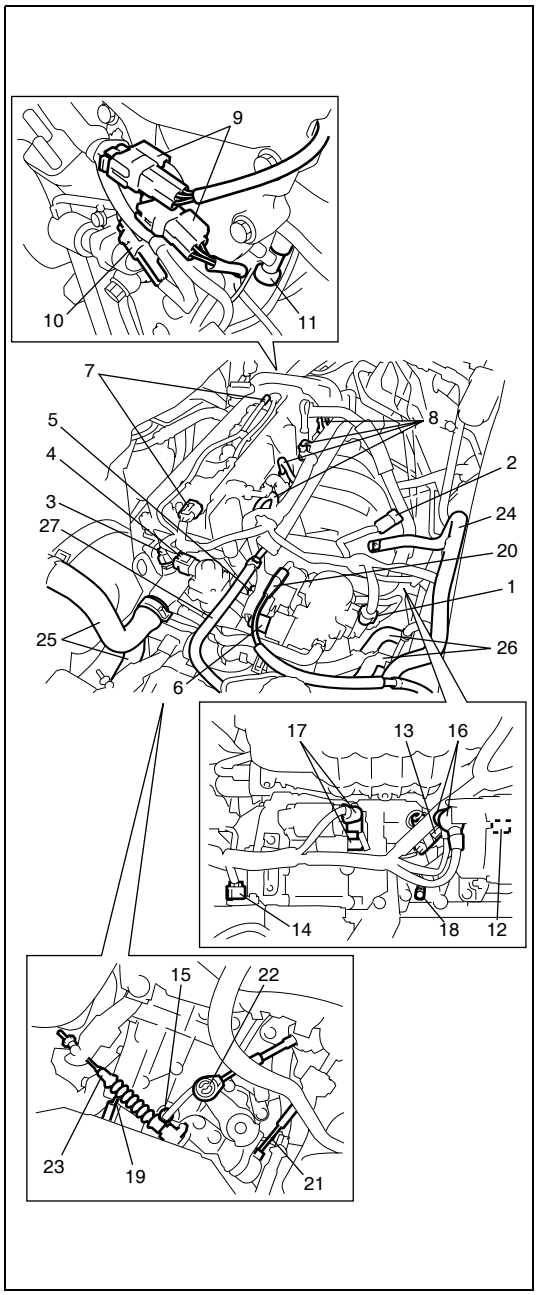

14) Disconnect the following electric lead wires:
- TP sensor (1)
- MAP sensor (2)
- ECT sensor (3)
- EGR valve (4)
- CMP sensor (5)
- IAC valve (6)
- Ignition coil assembly (7)
- Injectors (8)
- Heated oxygen sensor (9)
- Oil control valve (10)
- Engine oil pressure switch (11)
- CKP sensor (12)
- Knock sensor (13)
- VSS (14)
- Back up light switch (15)
- Generator (16)
- Starting motor (17)
- Ground terminal (18) from cylinder block
- Battery ground cable (19) from transaxle
- Magnet clutch switch of A/C compressor (if equipped)
- Each wire harness clamps

15) Remove fuse box from its bracket.
16) Disconnect the following cables :
- Accelerator cable (20)
- Gear select control cable (21)
- Gear shift control cable (22)
- Clutch cable (23)

17) Disconnect the following hoses :
- Brake booster hose (24) from intake manifold
- Radiator inlet and outlet hoses (25) from each pipe
- Heater inlet and outlet hoses (26) from each pipe
- Fuel feed hoses (27) from fuel feed pipe

18) Remove exhaust No.1 pipe referring to “Exhaust Manifold Removal and Installation” in this section.
19) Disconnect right and left drive shaft joints to differential gear referring to “Front Drive Shaft Assembly Removal and Installation” in Section 4A.
For engine and transaxle removal, it is not necessary to remove drive shafts from steering knuckle.
20) For 4WD vehicle, remove propeller shaft referring to “Propeller Shaft Removal and Installation” in Section 4B.

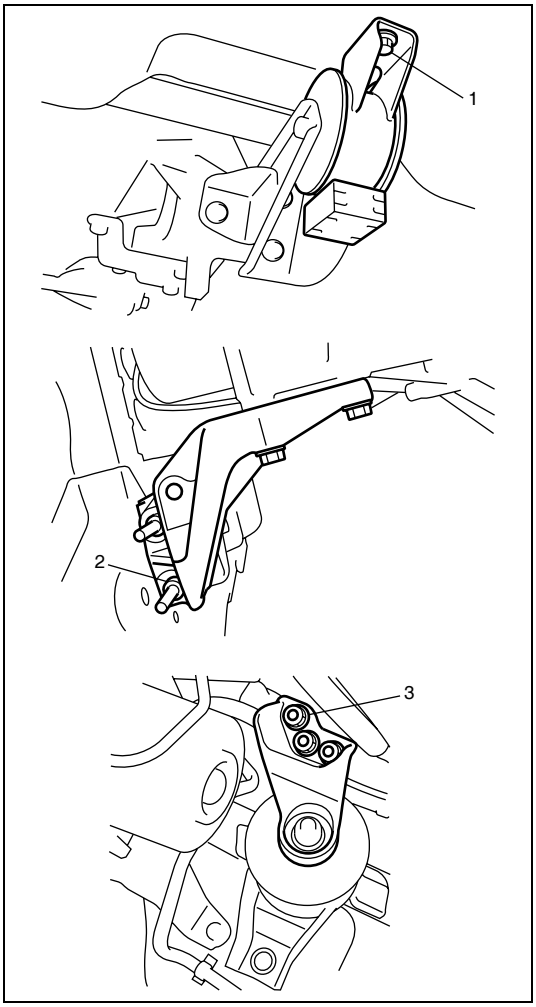

21) Install lifting device.
22) Remove engine rear mounting bolts (1), engine left mounting bracket nuts (2) and engine right mounting nuts (3).

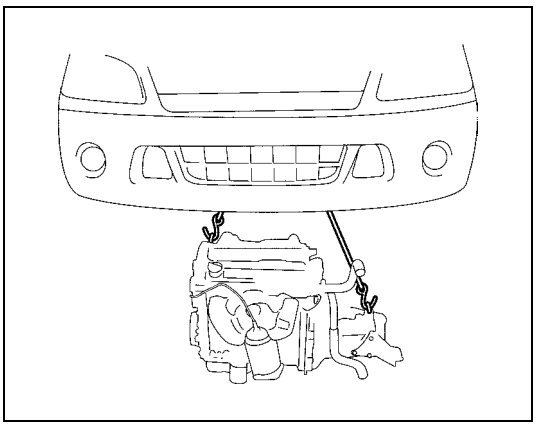

23) Before removing engine with transaxle from body, recheck to make sure all hoses, electric wires and cables are disconnected from engine and transaxle.
24) Lower engine with transaxle from body.

NOTE:

Before lowering engine, to avoid damage to A/C compressor, raise it through clearance made on engine crankshaft pulley side. At this time, use care so that no excessive force is applied to hoses.

25) Disconnect transaxle from engine referring to “Transaxle Unit Dismounting and Remounting” in Section 7A1.
26) Remove clutch cover and clutch disk referring to “Clutch Cover, Clutch Disc and Flywheel Removal and Installation” in Section 7C1.

Installation

1) Install clutch cover and clutch disk referring to “Clutch Cover, Clutch Disc and Flywheel Removal and Installation” in Section 7C1.
2) Connect transaxle to engine referring to “Transaxle Unit Dismounting and Remounting” in Section 7A1.

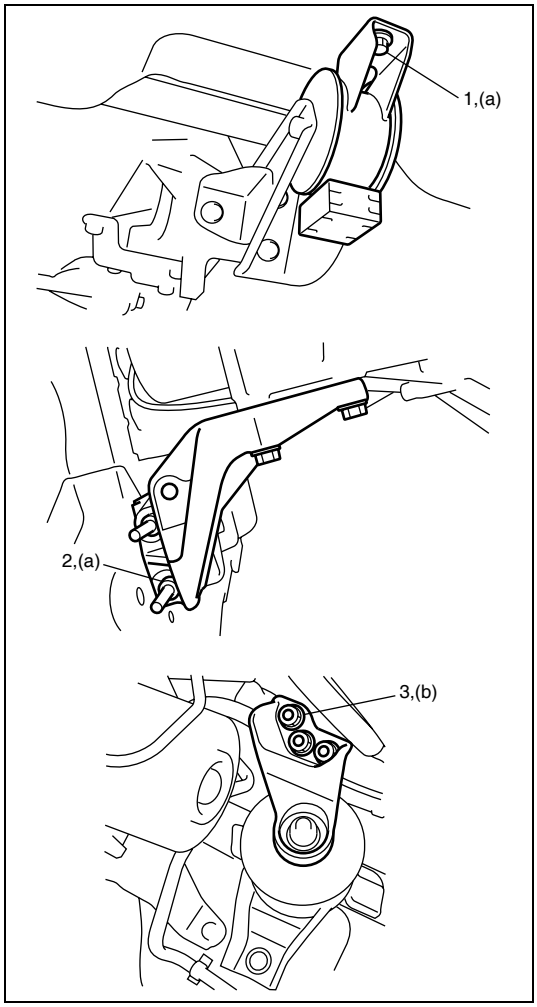

3) Lift engine with transaxle into engine compartment, but do not remove lifting device.
4) Install engine rear mounting bolts (1), engine left mounting bracket nuts (2) and engine right mounting nuts (3).
   Tighten these bolts and nuts to specified torque.

Tightening torque
Engine left mounting bolts
(a) : 55 N·m (5.5 kg-m, 40.0 lb-ft)
Engine right mounting bracket nuts
(b) : 65 N·m (6.5 kg-m, 47.0 lb-ft)

5) Remove lifting device.
6) For 4WD vehicle, install propeller shaft referring to “Propeller Shaft Removal and Installation” in Section 4B.
7) Connect drive shaft joints referring to Section 4A.
8) Install exhaust No.1 pipe referring to “Exhaust Manifold Removal and Installation” in this section.
9) Reverse disconnected hoses, cables and electric wires for connection.
10) Install air cleaner case and resonator.
11) Install A/C compressor to its bracket (if equipped).
12) Adjust A/C compressor belt tension (if equipped) referring to “Compressor Drive Belt Inspection and Adjustment” in Section 1B.
13) Adjust accelerator cable play referring to “Accelerator cable adjustment” in Section 6E1.
14) Check to ensure that all removed parts are back in place. Reinstall any necessary parts which have not been reinstalled.
15) Refill cooling system with coolant referring to “Cooling System Flush and Refill” in Section 6B.
16) Refill engine with engine oil referring to “Engine Oil and Oil Filter Replacement” in Section 0B.
17) Refill transaxle with transaxle oil referring to “Manual Transaxle Oil Change” in Section 7A1.
18) Refill transfer with transfer oil referring to “Transfer Oil Change” in Section 7D (for 4WD vehicle).
19) Connect negative cable at battery.
20) Verify that there is no fuel leakage, coolant leakage, oil leakage and exhaust gas leakage at each connection.

Timing Chain Cover Components

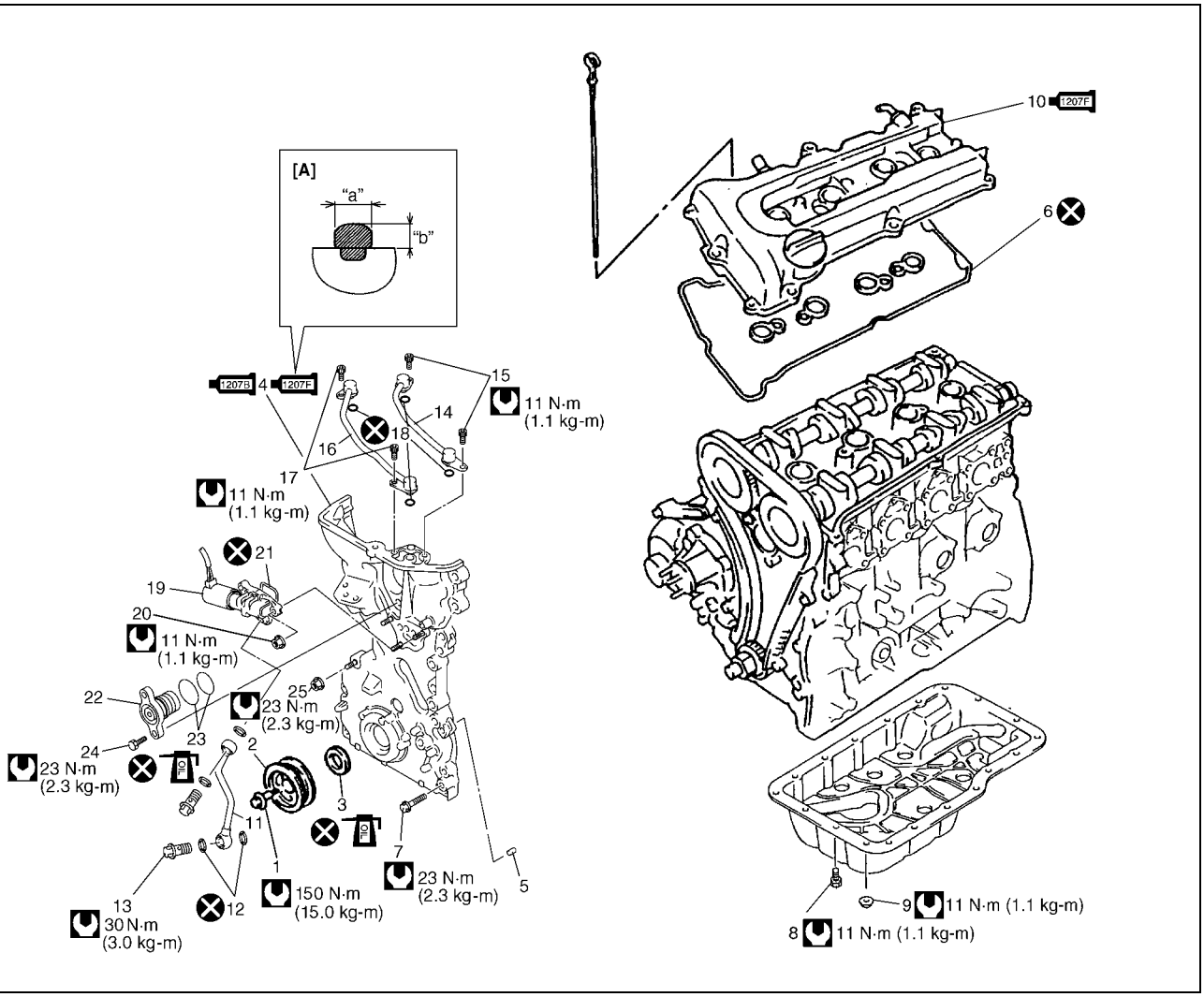

[A]: Sealant application amount	8. Oil pan mounting bolt	18. O ring
"a": 3 mm (0.12 in.)	9. Oil pan mounting nut	19. Oil control valve
"b": 2 mm (0.08 in.)	1207F 10. Cylinder head cover : Apply sealant 99000-31250 to the sealing point for timing chain cover mating surface and cylinder head gasket sealing point referring to "Installation" under "Cylinder Head Cover Removal and Installation" in this section.	20. Oil control valve mounting nut
1. Crankshaft pulley bolt	11. Oil gallery pipe No.1	21. O ring
2. Crankshaft pulley	12. Copper washer	22. Cap
3. Oil seal : Apply engine oil to oil seal lip.	13. Oil gallery pipe No.1 bolt	23. O ring
1207B 1207F 4. Timing chain cover : Apply sealant 99000-31140 to the mating surface of cylinder and cylinder head. : Apply sealant 99000-31250 to the mating surface of timing chain cover referring to the figure of Step 1) of "Installation" under "Timing Chain Cover Removal and Installation" in this section.	14. Oil gallery pipe No.2	24. Cap bolt
5. Pin	15. Oil gallery pipe No.2 bolt	25. Timing chain cover mounting nut
6. Cylinder head cover gasket	16. Oil gallery pipe No.3	Tightening torque
7. Timing chain cover mounting bolts	17. Oil gallery pipe No.3 bolt	Do not reuse.

Timing Chain Cover Removal and Installation

Removal

CAUTION:
- **Keep working table, tools and hands clean while overhauling.**
- **Use special care to handle aluminum parts so as not to damage them.**
- **Do not expose removed parts to dust. Keep them always clean.**

1) Remove engine assembly from vehicle referring to “Engine Assembly Removal and Installation” in this section.

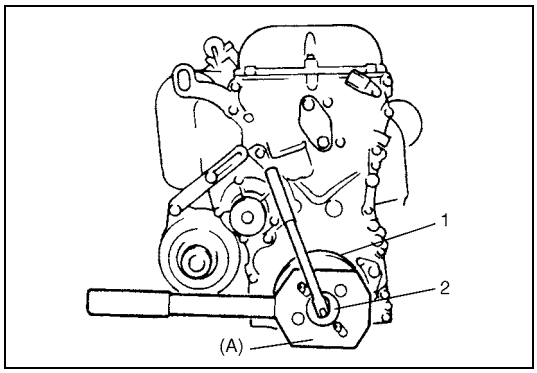

2) Remove crankshaft pulley bolt (2).
   To lock crankshaft pulley (1), use special tool with it as shown in figure.

   Special tool
   (A) : 09917-68221

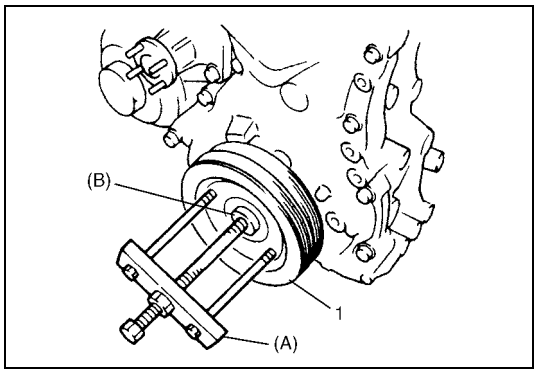

3) Remove crankshaft pulley (1).
   If it is hard to remove, use special tools as shown in figure.

   Special tool
   (A) : 09944-36011
   (B) : 09926-58010

4) Remove cylinder head cover referring to “Cylinder Head Cover Removal and Installation” in this section.
5) Remove oil pan referring to “Oil Pan and Oil Pump Strainer Removal and Installation” in this section.
6) Remove water pump pulley.

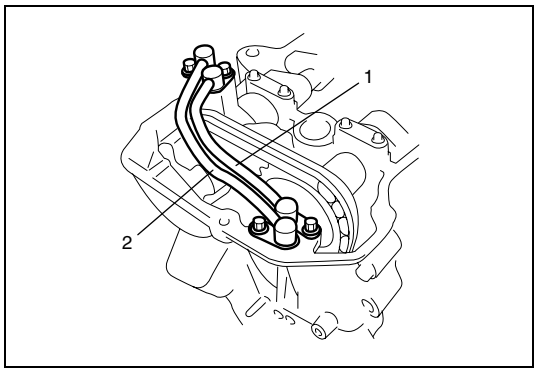

7) Remove oil gallery pipes No.2 (1) and No.3 (2).

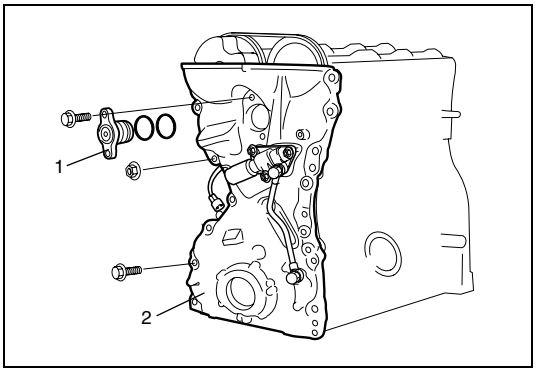

8) Remove cap (1) from timing chain cover (2).
9) Remove timing chain cover.

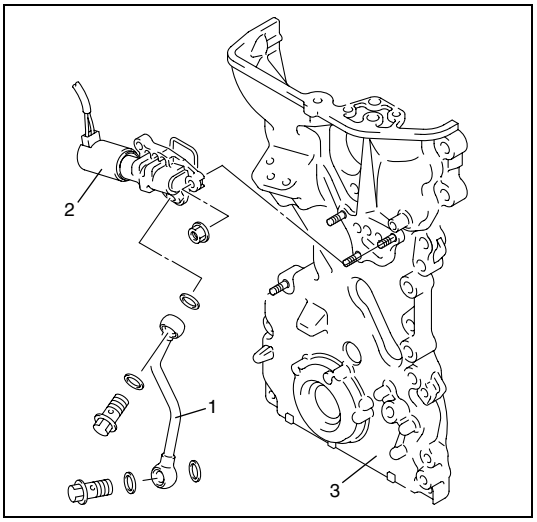

10) Remove oil gallery pipe No.1 (1) and oil control valve (2) from timing chain cover (3).

Installation

1) Clean sealing surface on timing chain cover, cylinder block and cylinder head.
   Remove oil, old sealant and dust from sealing surface.

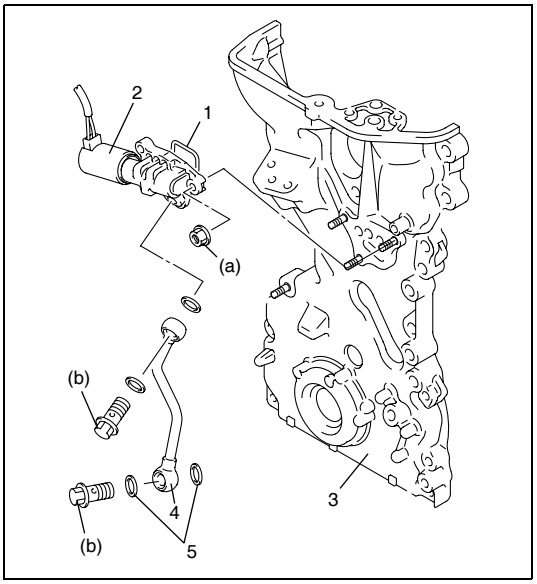

2) Install new O-ring (1) to oil control valve (2).
3) Install oil control valve to timing chain cover (3).
   Tighten nuts to specification.

Tightening torque
Oil control valve mounting nuts
(a) : 11 N·m (1.1 kg-m, 8.0 lb-ft)

4) Install oil gallery pipe No.1 (4) with new copper washers (5) to timing chain cover.
   Tighten bolts to specification.

Tightening torque
Oil gallery pipe No.1 bolts
(b) : 30 N·m (3.0 kg-m, 21.5 lb-ft)

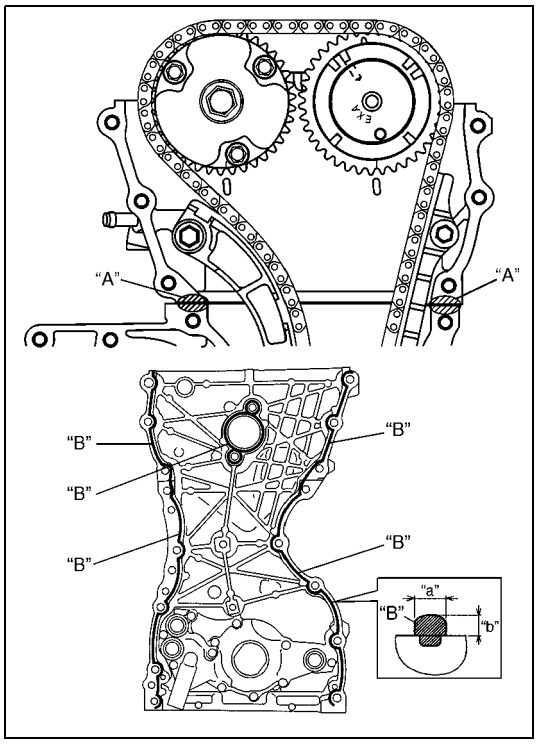

5) Apply sealant "A" to mating surface of cylinder and cylinder head and "B" to mating surface of timing chain cover as shown in figure.

"A" : Sealant 99000-31140
"B" : Sealant 99000-31250

Sealant amount for timing chain cover
Width "a" : 3 mm (0.12 in.)
Height "b" : 2 mm (0.08 in.)

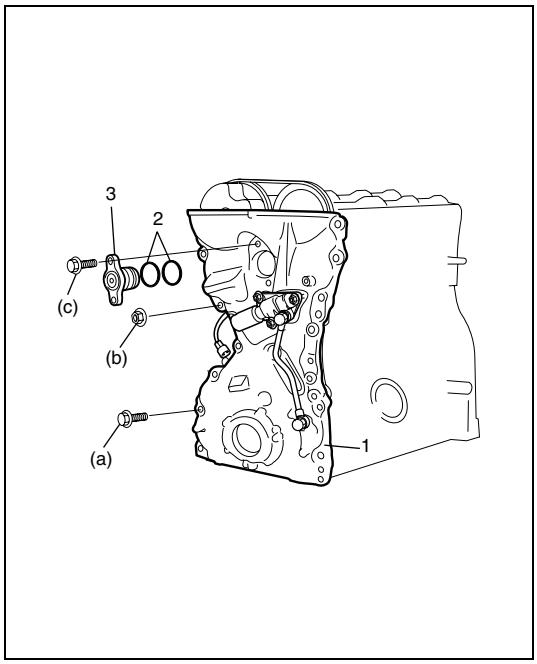

6) Apply engine oil to oil seal lip, then install timing chain cover (1).
Tighten bolts and nut to specified torque.

NOTE:

Before installing timing chain cover, check that pin is securely fitted.

Tightening torque
Timing chain cover bolts (a) : 23 N·m (2.3 kg-m, 17.0 lb-ft)
Timing chain cover nut (b) : 23 N·m (2.3 kg-m, 17.0 lb-ft)

7) Apply engine oil to new O-rings (2) and install them to cap (3).
8) Install cap (3) to timing chain cover (1).
Tighten bolts to specified torque.

Tightening torque
Cap bolts (c) : 23 N·m (2.3 kg-m, 17.0 lb-ft)

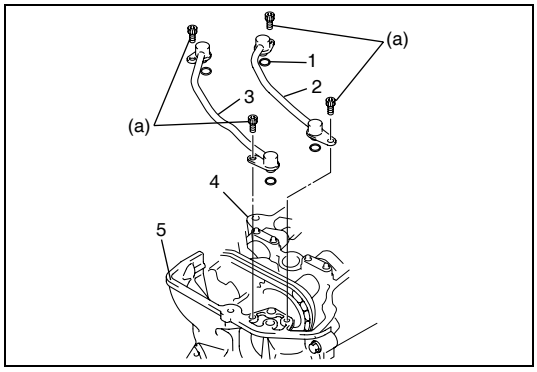

9) Install new O-ring (1) to oil gallery pipes No.2 (2) and No.3 (3).
10) Install oil gallery pipes No.2 and No.3 to cylinder head (4) and timing chain cover (5).
Tighten bolts to specified torque.

Tightening torque
Oil gallery pipes No.2 and No.3 bolts (a) : 11 N·m (1.1 kg-m, 8.0 lb-ft)

11) Install water pump pulley.
12) Install cylinder head cover referring to “Cylinder Head Cover Removal and Installation” in this section.
13) Install oil pan referring to “Oil Pan and Oil Pump Strainer Removal and Installation” in this section.

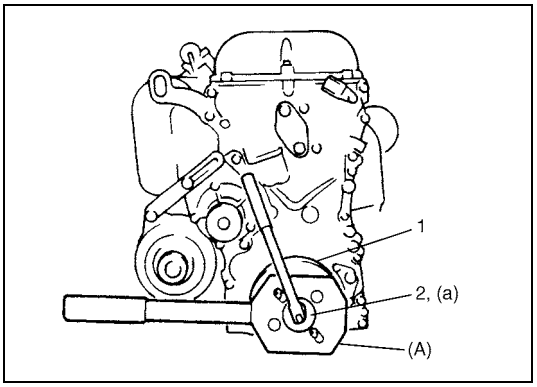

14) Install crankshaft pulley (1). Tighten bolt (2) to specified torque. To lock crankshaft pulley, use special tool with it as shown in the figure.

Special tool
(A) : 09917-68221

Tightening torque
Crankshaft pulley bolt (a) : 150 N·m (15.0 kg-m, 108.5 lb-ft)

15) Install engine assembly to vehicle referring to “Engine Assembly Removal and Installation” in this section.

Timing Chain Cover Inspection

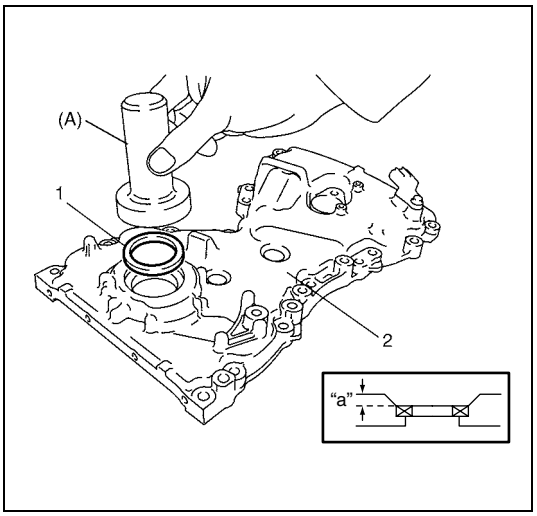

Oil seal

- Check oil seal (1) lip for fault or other damage.
  Replace as necessary.

NOTE:

When installing new oil seal, press fit to timing chain cover (2) by using special tool (Bearing installer) as shown in the figure.

Special tool
(A) : 09913-75810

Drive in dimension
“a” : 1.5 mm (0.06 in.)

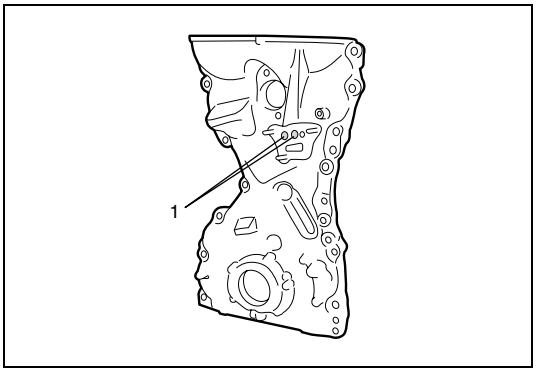

Timing chain cover

Inspect strainer (1) of oil passage for driving intake cam timing sprocket assembly (VVT actuator).
If clog or foreign matter exists, clean strainer.

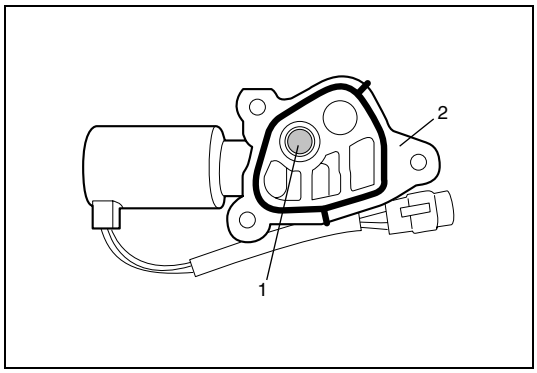

Oil control valve

Inspect strainer (1) and mating surface (2) of oil control valve.
Clean oil control valve.

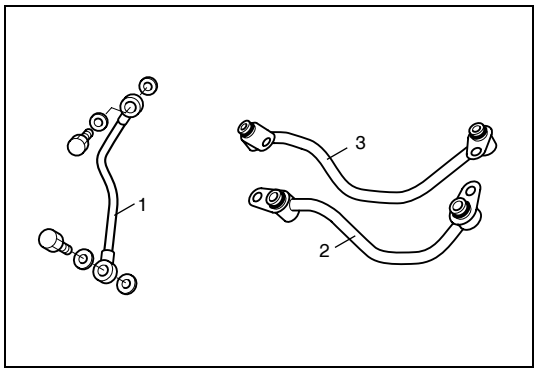

Oil gallery pipe

Inspect oil gallery pipes No.1 (1), No.2 (2) and No.3 (3).
Replace if crack, deformation or clog exists.

Oil Pump Components

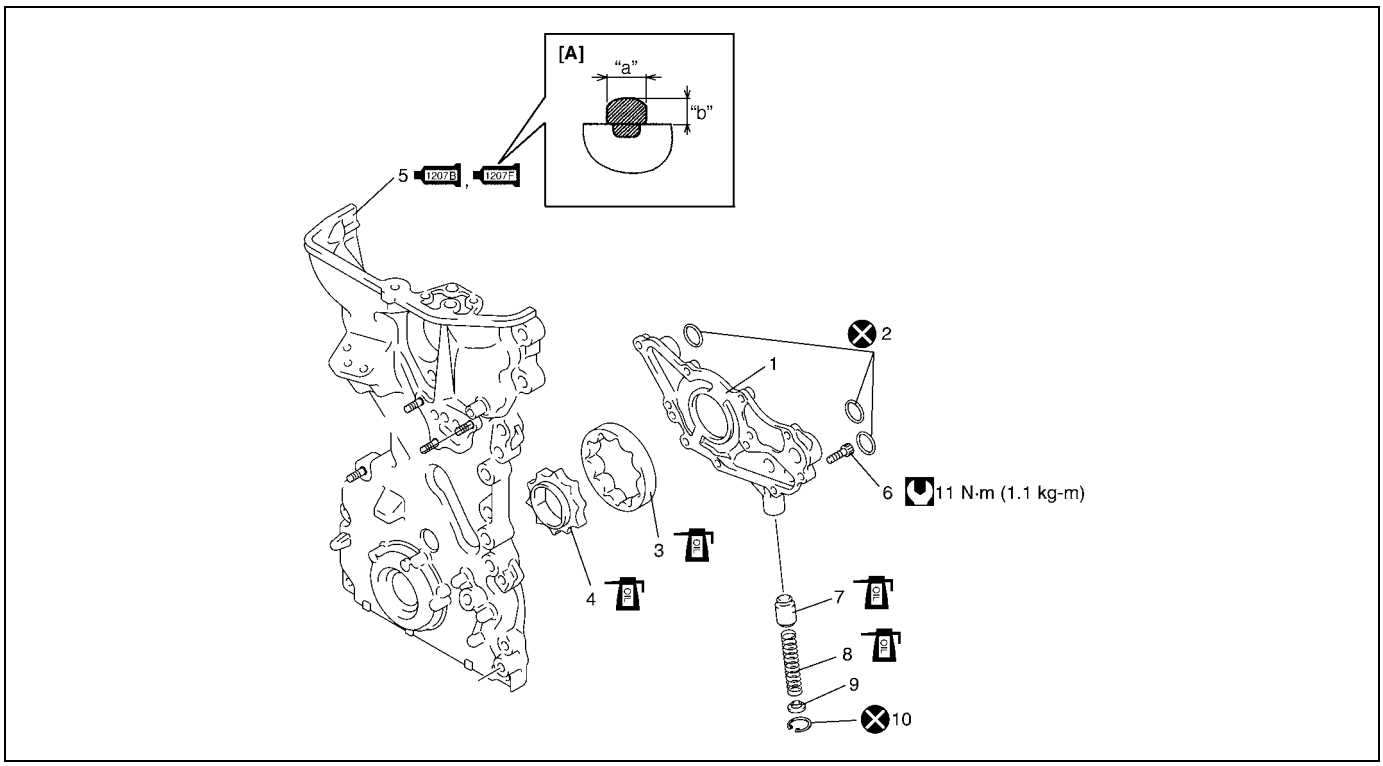

[A] : Sealant application amount	4. Inner rotor	10. Circlip
"a" : 3 mm (0.12 in.)	5. Timing chain cover : Apply sealant 99000-31140 to the mating surface of cylinder and cylinder head. : Apply sealant 99000-31250 to mating surface of timing chain cover referring to the figure of Step 4) of "Installation" under "Timing Chain Cover Removal and Installation" in this section.	Tightening torque
"b" : 2 mm (0.08 in.)	6. Rotor plate bolt	Do not reuse.
1. Rotor plate	7. Relief valve	Apply thin coat of engine oil to sliding surface of each parts.
2. O ring	8. Spring	
3. Outer rotor	9. Retainer	

Oil Pump Removal and Installation

Removal

Remove timing chain cover referring to "Timing Chain Cover Removal and Installation" in this section.

Installation

For installation referring to "Timing Chain Cover Removal and Installation" in this section.

Oil Pump Disassembly and Assembly

Disassembly

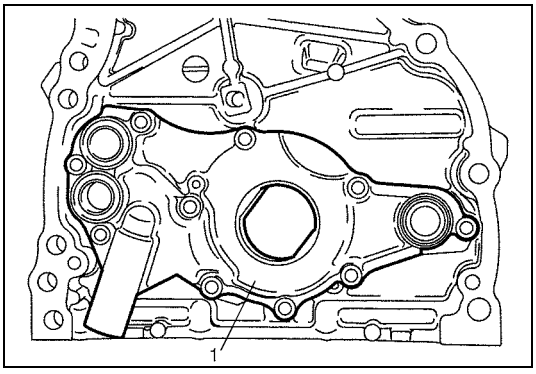

1) Remove rotor plate (1) by removing its mounting bolts.

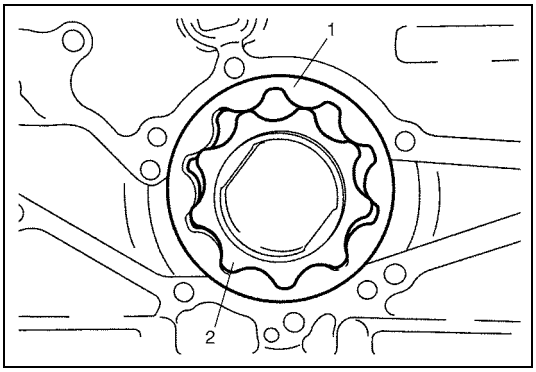

2) Remove outer rotor (1) and inner rotor (2).

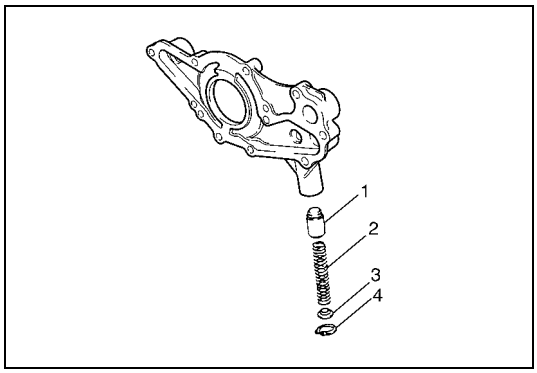

3) Remove relief valve (1), spring (2) and retainer (3) by removing circlip (4).

Assembly

1) Wash, clean and then dry all disassembled parts.
2) Apply thin coat of engine oil to inner and outer rotors, oil seal lip portion, inside surfaces of oil pump case and plate.

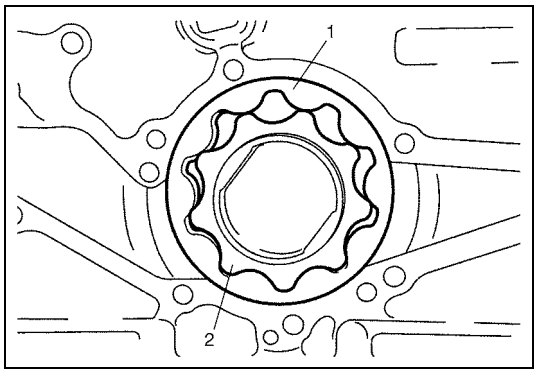

3) Install outer (1) and inner rotors (2) to oil pump case.

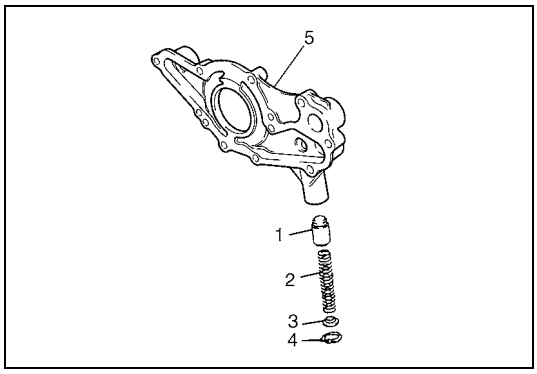

4) Apply engine oil to relief valve (1) and spring (2), and install them with retainer (3) and new circlip (4) to rotor plate (5).

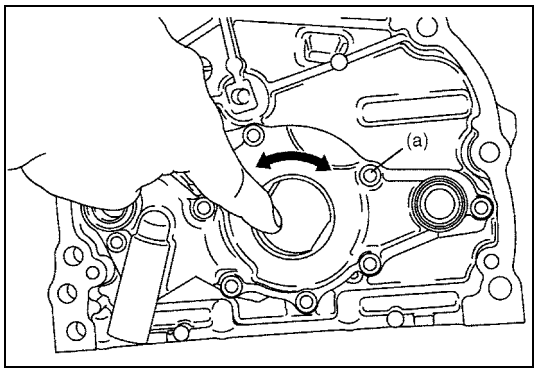

5) Install rotor plate and tighten all bolts to specified torque.
After installing plate, check to be sure that rotors turn smoothly by hand (0.3 N·m (0.03 kg-m, 0.25 lb-ft) torque or below).

Tightening torque
Oil pump rotor plate bolts (a) : 11 N·m (1.1 kg-m, 8.0 lb-ft)

Oil Pump Inspection

Oil seal

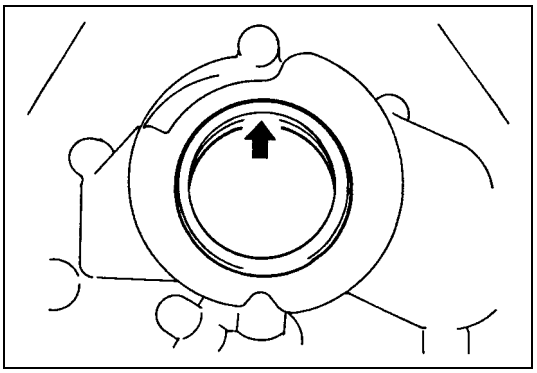

- Check oil seal lip for fault or other damage. Replace as necessary.

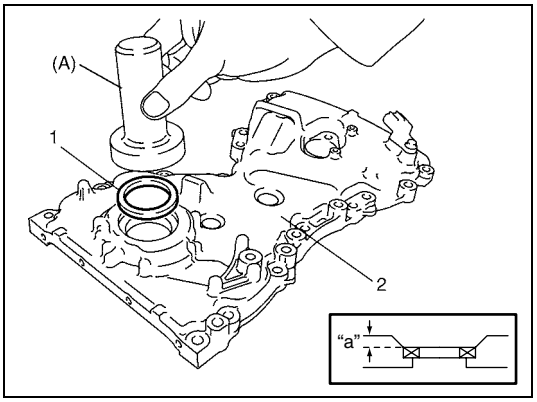

NOTE:

When installing new oil seal (1), press-fit it to oil pump case (2) by using special tool as shown in the figure.

Special tool
(A) : 09913-75810

Drive in dimension
"a" : 1.5 mm (0.06 in.)

Oil pump assembly

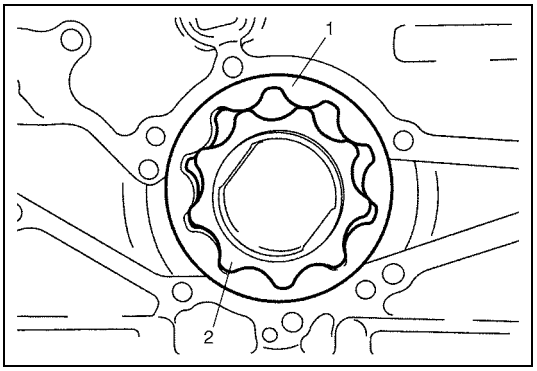

- Check outer (1) and inner rotors (2), rotor plate, and oil pump case for excessive wear or damage.

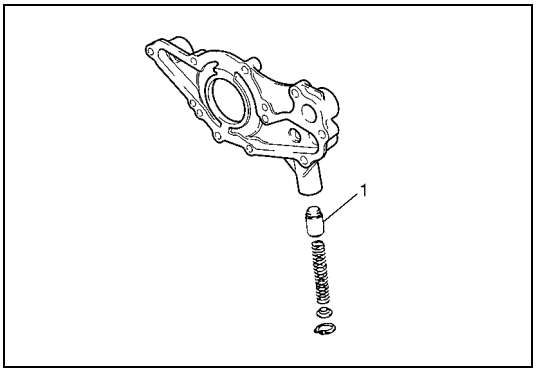

- Check relief valve (1) for excessive wear or damage and operates smoothly.

Radial clearance

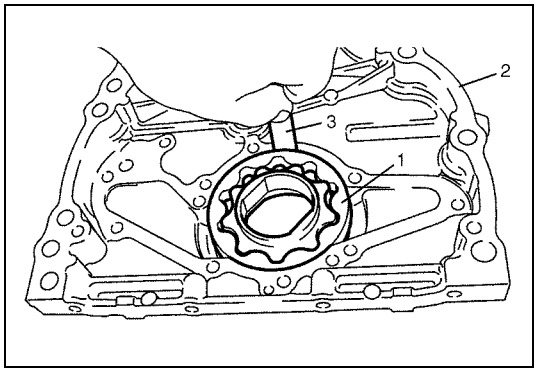

Check radial clearance between outer rotor (1) and case (2), using thickness gauge (3).
If clearance exceeds its limit, replace oil pump assembly.

Limit on radial clearance between outer rotor and case for oil pump
: 0.310 mm (0.0122 in.)

Side clearance

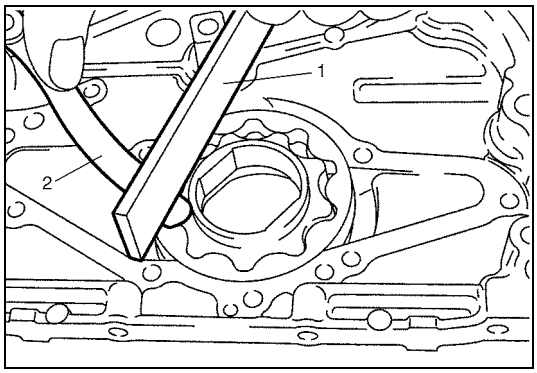

Using straight edge (1) and thickness gauge (2), measure side clearance.
If clearance exceeds its limit, replace oil pump assembly.

Limit on side clearance for oil pump inner rotor
: 0.15 mm (0.0059 in.)

Relief valve spring free length and load

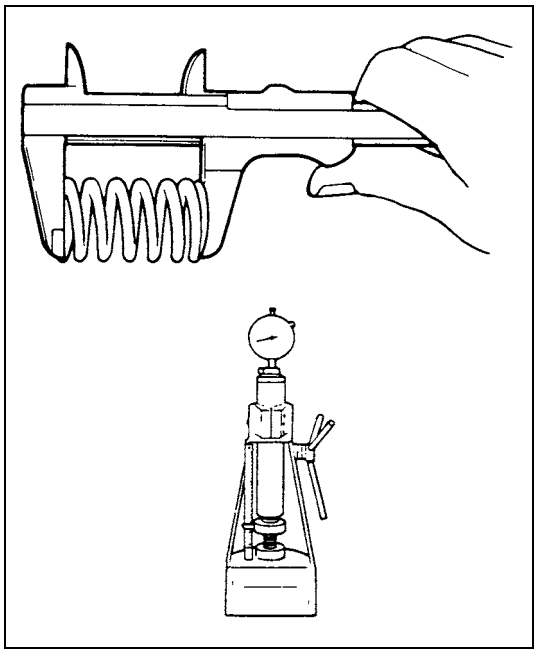

Check relief valve spring free length and load as shown in figure.
If the measured valve spring length is lower than the specification, replace relief valve spring.

	Standard	Limit
Free length	**52.4 mm (2.06 in.)**	**–**
Load at spring length 38.5 mm (1.52 in.)	**77 N (7.7 kgf, 17.0 lb)**	**69 N (6.9 kgf, 15.0 lb)**

Timing Chain and Chain Tensioner Components

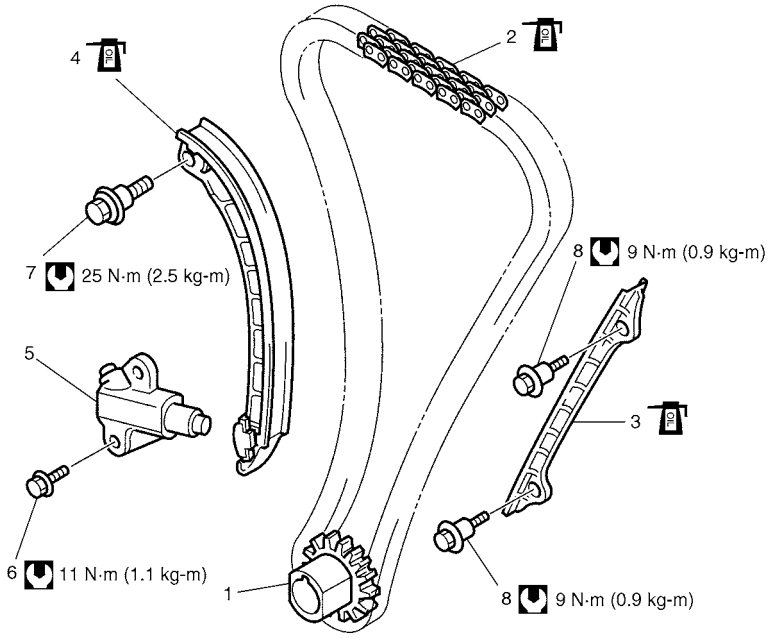

1. Crankshaft timing sprocket	4. Timing chain tensioner : Apply engine oil to sliding surface.	7. Chain tensioner mounting bolt
2. Timing chain : Apply engine oil.	5. Timing chain tensioner adjuster assembly	8. Chain guide mounting bolt
3. Timing chain No.1 guide : Apply engine oil to sliding surface.	6. Chain tensioner adjuster mounting bolt	Tightening torque

Timing Chain and Chain Tensioner Removal and Installation

Removal

CAUTION:

After timing chain is removed, never turn crankshaft and camshafts independently more than its allowable turning range described in "Installation" section.

If turned, interference may occur between piston and valves and valves themselves, and parts related to piston and valves may be damaged.

1) Remove timing chain cover referring to "Timing Chain Cover Removal and Installation" in this section.

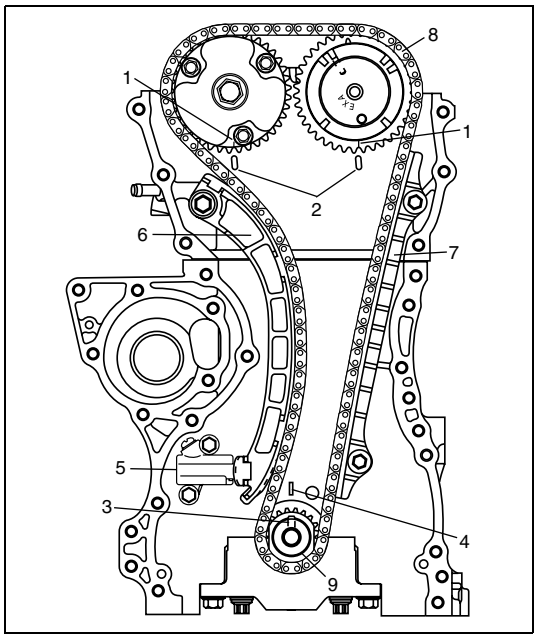

2) By turing crankshaft, align both intake and exhaust camshaft timing sprocket marks (1) with notches (2) of cylinder head respectively and align crank shaft sprocket key (3) with notch of cylinder block (4).
3) Remove timing chain tensioner adjuster assembly (5).
4) Remove timing chain tensioner (6).
5) Remove timing chain No.1 guide (7).
6) Remove timing chain (8) with crankshaft timing sprocket (9)

Installation

CAUTION:

After timing chain is removed, never turn crankshaft and camshafts independently more than such an extent ("a", "b") as shown in figure.

If turned, interference may occur between piston and valves and valves themselves, and parts related to piston and valves may be damaged.

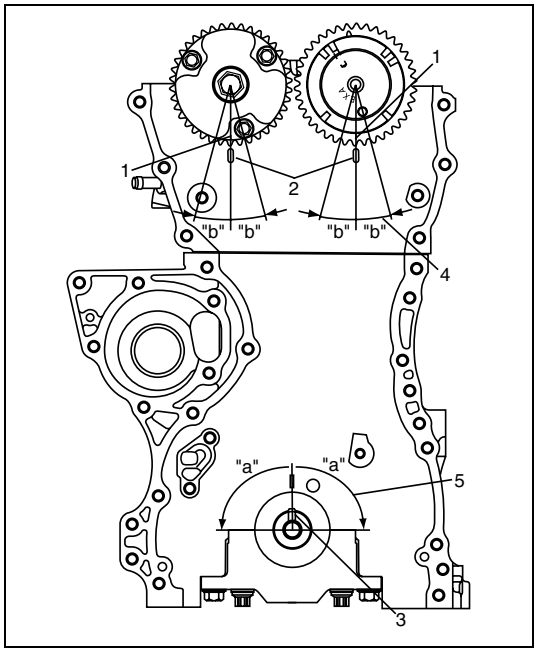

1) Check that match marks (1) on intake and exhaust camshaft timing sprockets are in match with notches (2) on cylinder head as shown in figure.
2) Set key (3) and turn crankshaft to position key on upside of crankshaft.

"a" : 90°	4. Camshaft (IN and EX) allowable turning range. By marks on camshaft timing sprocket within 15° from notches on cylinder head on both right and left.
"b" : 15°	5. Crankshaft allowable turning range. By key on crankshaft, within 90° from top on both right and left.

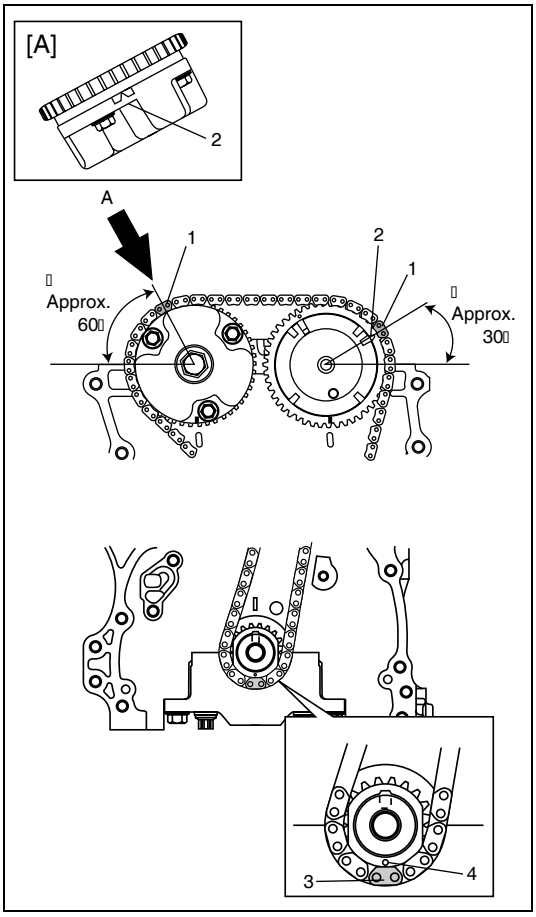

3) Install timing chain by aligning dark blue plate (1) of timing chain and triangle mark (2) on camshaft timing sprocket as shown in figure.
4) Fit crankshaft timing sprocket to timing chain by aligning gold plate (3) of timing chain and circle mark (4) on crankshaft timing sprocket. Then install crankshaft timing sprocket fitted with chain to crankshaft.

[A] : View A

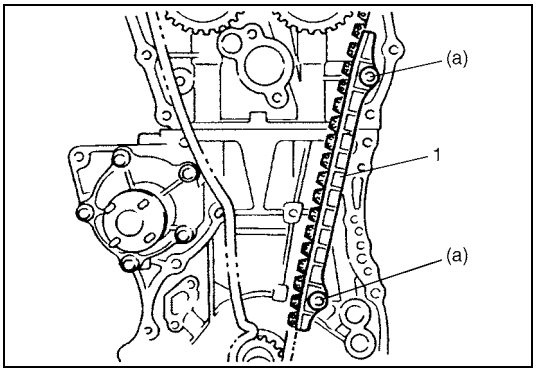

5) Apply engine oil to sliding surface of timing chain No.1 guide (1) and install it as shown in figure.
Tighten guide bolts to specified torque.

Tightening torque
Timing chain No.1 guide bolts
(a) : 9 N·m (0.9 kg-m, 6.5 lb-ft)

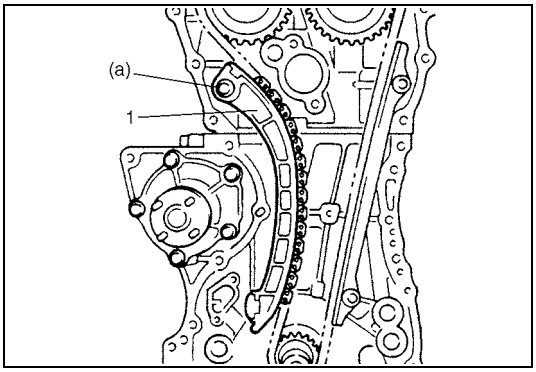

6) Apply engine oil to sliding surface of chain tensioner (1) and install chain tensioner and spacer.
Tighten tensioner bolt to specified torque

Tightening torque
Timing chain tensioner bolt
(a) : 25 N·m (2.5 kg-m, 18.0 lb-ft)

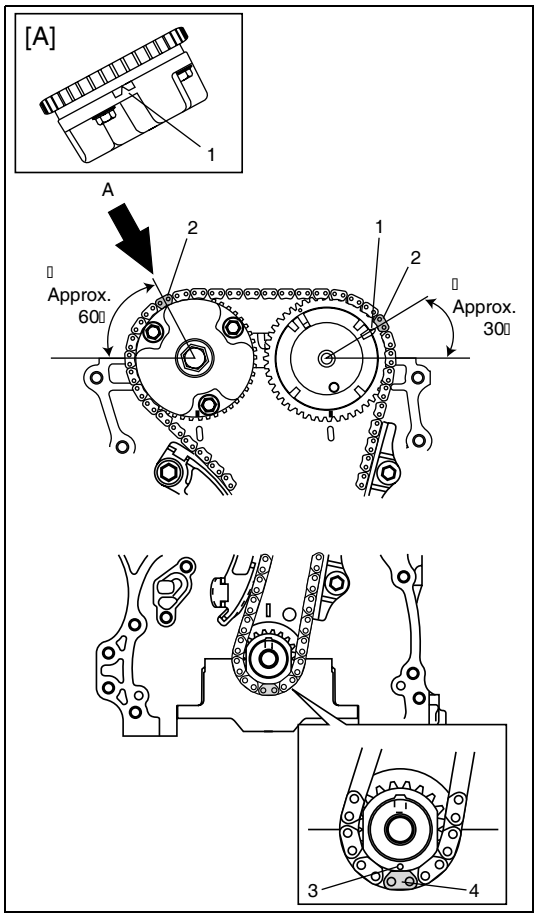

7) Check that match marks (1) on intake and exhaust camshaft timing sprockets are in match with marking of timing chain (2) and match mark on crankshaft timing sprocket (3) are in with marking of timing chain (4).

[A] : View A

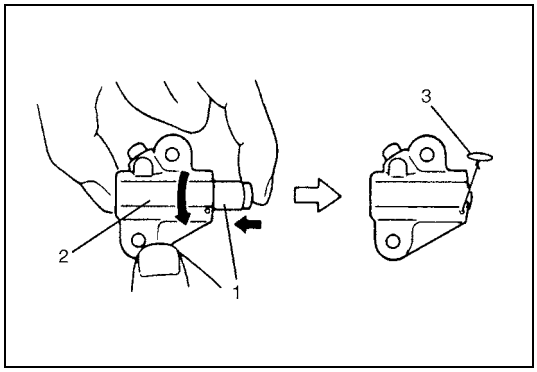

8) Screw in plunger (1) by turning body (2) in arrow direction and install a retainer (3) (wire) to hold plunger in place.

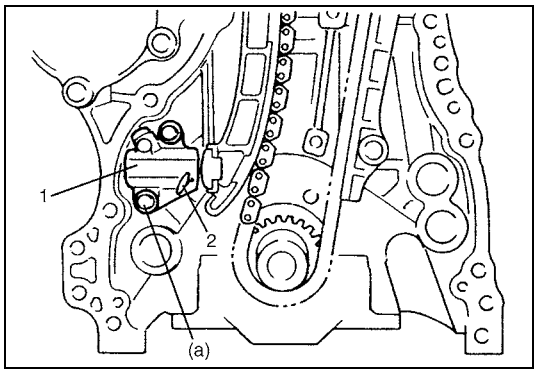

9) Install timing chain tensioner adjuster assembly (1) with a retainer (2).
Tighten adjuster bolts to specified torque and then remove a retainer from chain tensioner adjuster assembly.

Tightening torque
Timing chain tensioner adjuster bolts
(a) : 11 N·m (1.1 kg-m, 8.0 lb-ft)

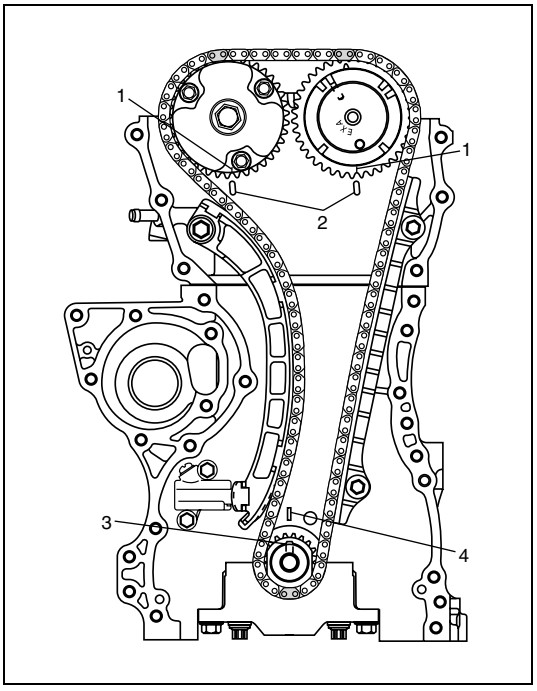

10) Apply engine oil to timing chain and then turn crankshaft clockwise by 2 revolutions and check that match marks (1) on intake and exhaust camshaft timing sprockets are in match with notches (2) on cylinder head and key (3) is in match with notch (4) on cylinder block as shown in figure.
    If each marking chain and each match mark are no matches, adjust each sprockets and timing chain.
11) Install timing chain cover referring to “Timing Chain Cover Removal and Installation” in this section.
12) Perform Steps 3) to 8) of “Installation” of “Timing Chain Cover Removal and Installation” in this section.

Timing Chain and Timing Chain Tensioner Inspection

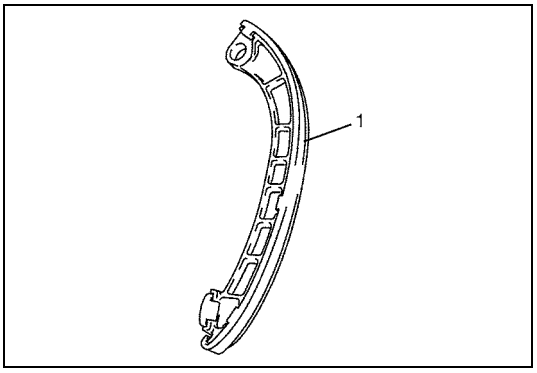

Timing chain tensioner

- Check shoe (1) for wear or damage.

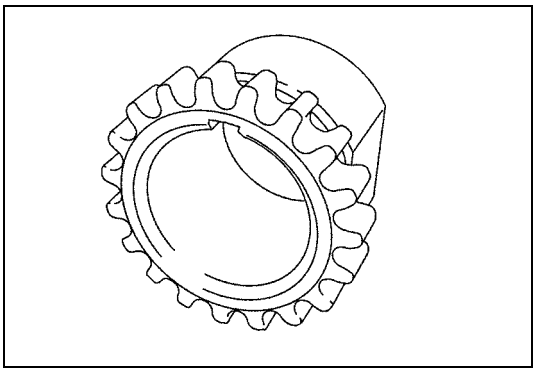

Crankshaft timing sprocket

- Check teeth of sprocket for wear or damage.

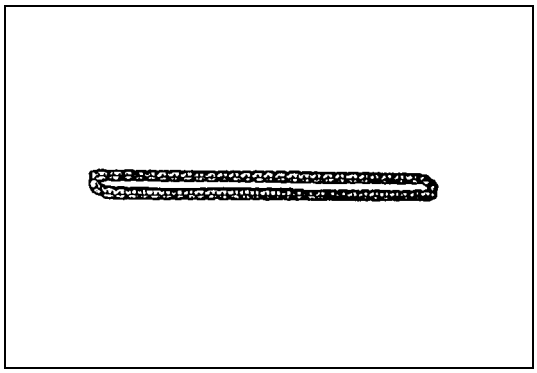

Timing chain

- Check timing chain for wear or damage.

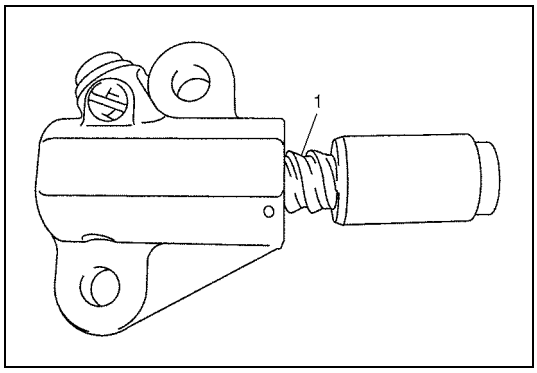

Timing chain tensioner adjuster

- Check that tooth surface (1) are free from damage.

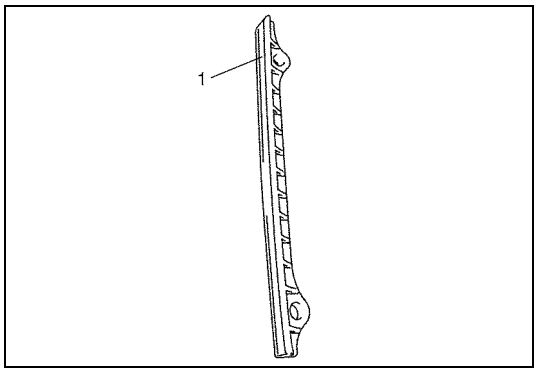

Timing chain No.1 guide

- Check shoe (1) for wear or damage.

Camshaft, Tappet and Shim Components

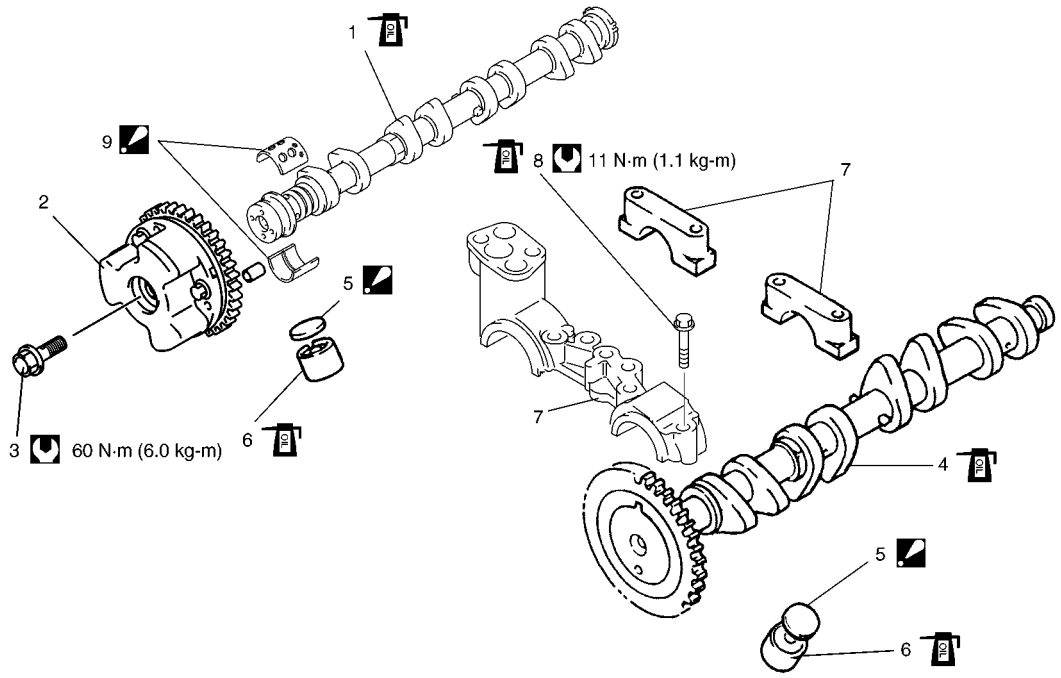

1. Intake camshaft	5. Shim : Shim No. on it faces tappet side.	9. Upper camshaft bearing : Install a bearing half with some holes to upper side of intake camshaft No.1 bearing.
2. Intake camshaft sprocket assembly	6. Tappet	Tightening torque
3. Intake camshaft sprocket bolt	7. Camshaft housing	Apply engine oil to sliding surface of each part.
4. Exhaust camshaft	8. Camshaft housing bolt	

Camshaft, Tappet and Shim Removal and Installation

Removal

CAUTION:

- **Keep working table, tools and hands clean while overhauling.**
- **Use special care to handle aluminum parts so as not to damage them.**
- **Do not expose removed parts to dust. Keep them always clean.**

1) Remove timing chain cover referring to “Timing Chain Cover Removal and Installation” in this section.
2) Remove timing chain referring to “Timing Chain and Chain Tensioner Removal and Installation” in this section.

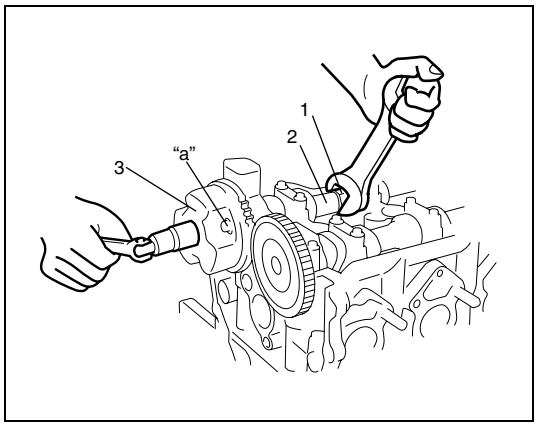

3) With hexagonal section (1) of intake camshaft (2) held stationary with spanner or the like, loosen mounting bolt of intake cam timing sprocket assembly (3) and remove it.

CAUTION:
Never attempt to loosen mounting bolt with intake cam timing sprocket assembly held stationary. Failure to follow this could result in damage to lock pin.
Do not loosen bolt "a" because intake cam timing sprocket assembly is not serviceable.

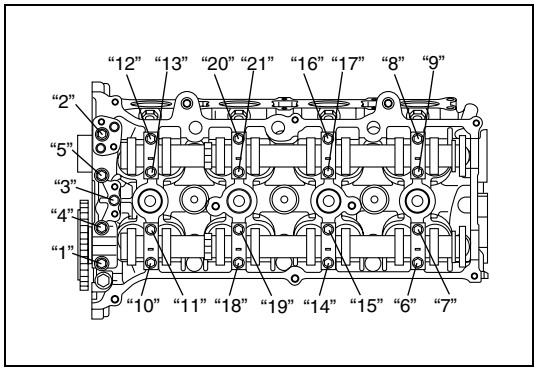

4) Loosen camshaft housing bolts in such order as indicated in figure and remove them.
5) Remove camshaft housings.
6) Remove intake and exhaust camshafts.

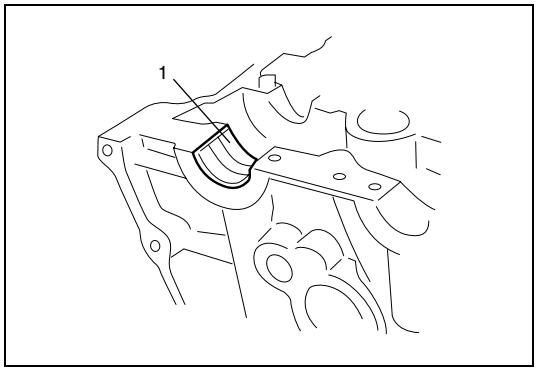

7) Remove camshaft bearing (1).

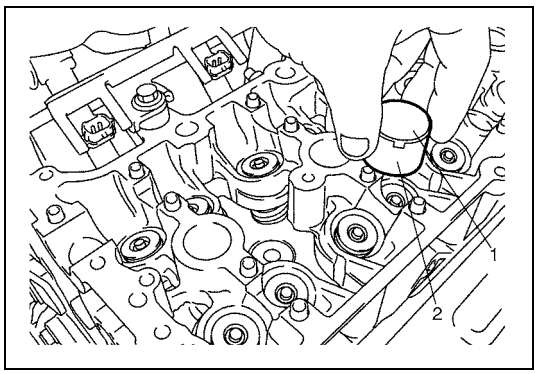

8) Remove tappets (2) with shims (1).

Installation

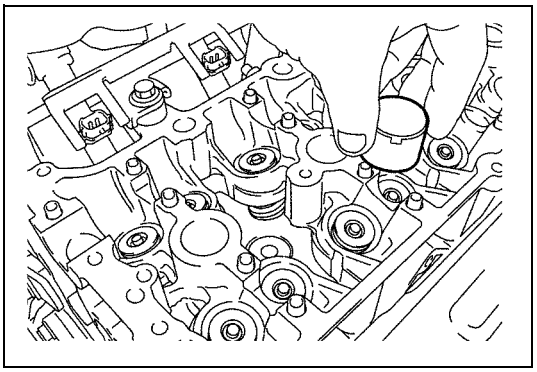

1) Install tappets and shims to cylinder head.
   Apply engine oil around tappet and then install it to cylinder head.

NOTE:

When installing shim, make sure to direct shim No. side toward tappet.

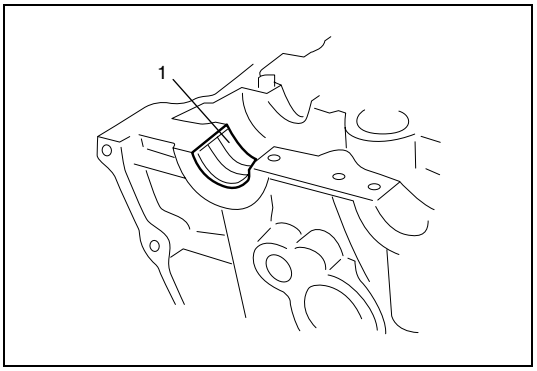

2) Install camshaft bearing (1) to cylinder head.

CAUTION:

Do not apply engine oil to camshaft bearing back.
Only a upper half bearing of intake camshaft bearing No.1 has some holes. Other bearings.

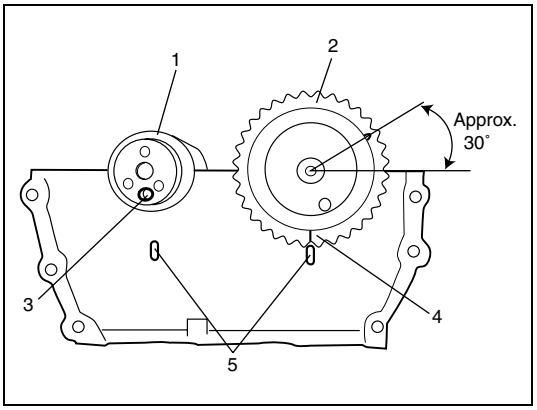

3) Install intake camshaft (1) and exhaust camshaft (2).
   Align knock pin (3) and match mark (4) with notches (5) as shown in the figure.

NOTE:

Before installing camshafts, turn crankshaft until key faces upward. Refer to "Timing Chain and Chain Tensioner Components".

4) Apply engine oil to sliding surface of each camshaft and camshaft journal then install them as shown in figure.

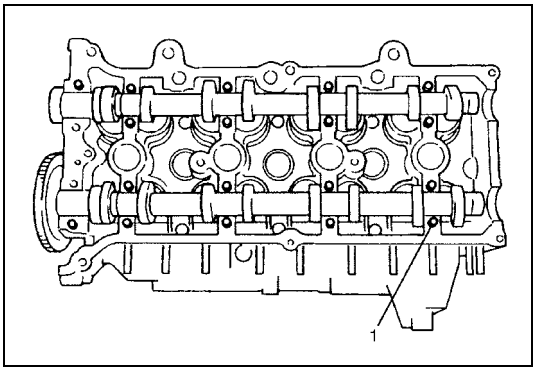

5) Install camshaft housing pins (1) as shown in figure.

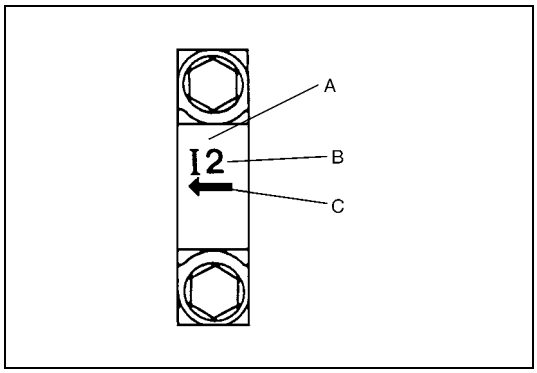

6) Check position of camshaft housings.
Embossed marks are provided on each camshaft housing, indicating position and direction for installation. Install housings as indicated by these marks.

A.	I : Intake side or E : Exhaust side
B.	Position from timing chain side
C.	Pointing to timing chain side

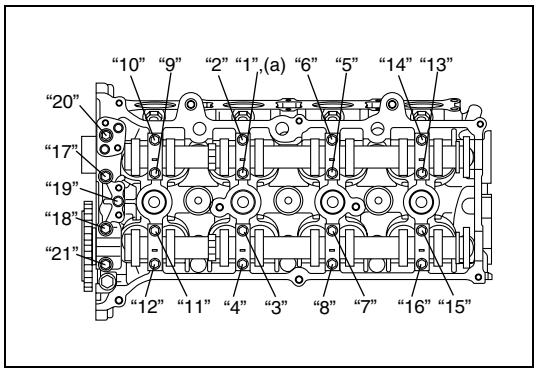

7) After applying engine oil to housing bolts, tighten them temporarily first. Then tighten them by the numerical order in figure. Tighten a little at a time and evenly among bolts and repeat tightening sequence two or three times before they are tightened to specified torque.

Tightening torque
Camshaft housing bolts (a) : 11 N·m (1.1 kg-m, 8.0 lb-ft)

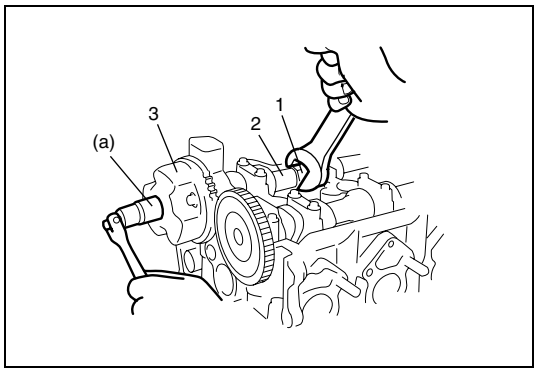

8) With hexagonal section (1) of intake camshaft (2) held stationary with spanner or the like, tighten bolt of intake cam timing sprocket assembly (3) to specification.

Tightening torque
Intake cam timing sprocket bolts
(a) : 60 N·m (6.0 kg-m, 43 lb-ft)

9) Install timing chain with crankshaft sprocket referring to "Timing Chain and Chain Tensioner Removal and Installation" in this section.
10) Install timing chain cover referring to "Timing Chain Cover Removal and Installation" in this section.
11) Check valve lashes as previously outlined.
12) Perform Steps 3) to 8) of "Installation" of "Timing Chain Cover Removal and Installation" in this section.

Camshaft, Tappet and Shim Inspection

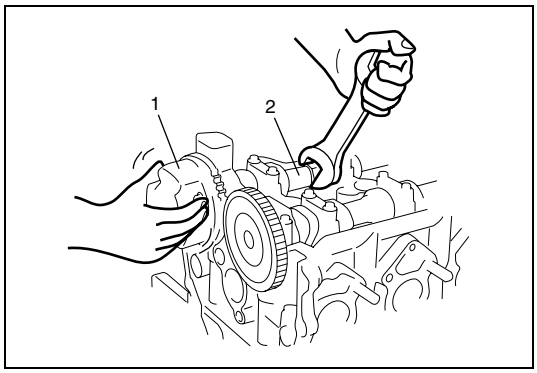

Intake cam timing sprocket assembly

Fit intake cam timing sprocket assembly to camshaft (2) and hold hexagonal section of camshaft by using spanner or the like.
Check if sprocket (1) is not turned by hand.
If moved, replace intake cam timing sprocket assembly.

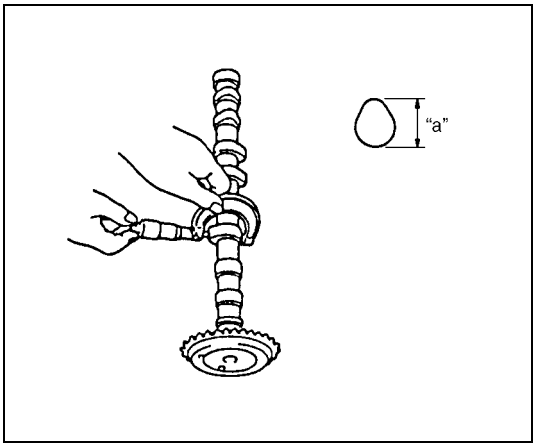

Cam wear

Using a micrometer, measure cam height "a". If measured height underruns its limit, replace camshaft.

Cam height "a" of camshaft

	Standard	Limit
Intake cam	**44.929 – 45.089 mm (1.769 – 1.775 in.)**	**44.80 mm (1.764 in.)**
Exhaust cam	**44.399 – 44.559 mm (1.748 – 1.754 in.)**	**44.28 mm (1.743 in.)**

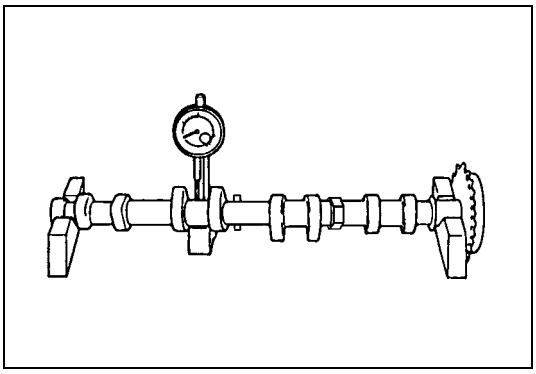

Camshaft runout

Set camshaft between two "V" blocks, and measure its runout by using a dial gauge.
If measured runout exceeds limit, replace camshaft.

Camshaft runout limit
: 0.10 mm (0.0039 in.)

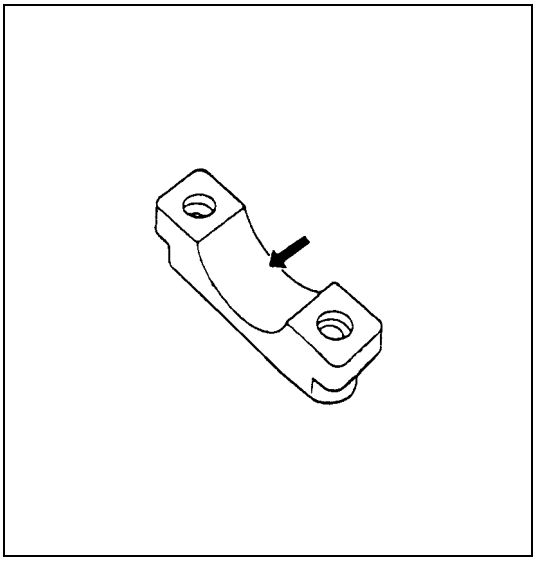

Camshaft journal wear

Check camshaft journals and camshaft housings for pitting, scratches, wear or damage.
If any malcondition is found, replace camshaft or cylinder head with housing. Never replace cylinder head without replacing housings.
Check clearance by using gaging plastic. Checking procedure is as follows.

1) Clean housings and camshaft journals.
2) Remove all tappets with shims.
3) Install camshafts to cylinder head.
4) Place a piece of gaging plastic to full width of journal of camshaft (parallel to camshaft).
5) Install camshaft housing.

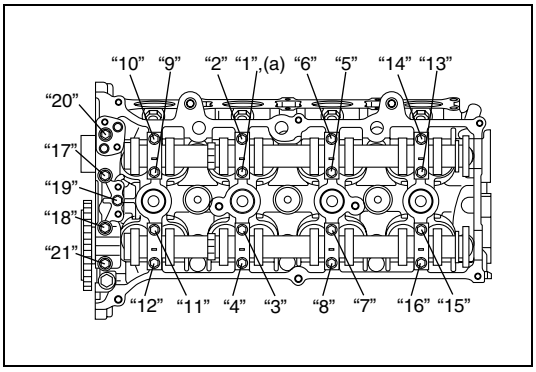

6) Tighten camshaft housing bolts in such order as indicated in figure a little at a time till they are tightened to specified torque.

NOTE:

Do not rotate camshaft while gaging plastic is installed.

Tightening torque
Camshaft housing bolts (a) : 11 N·m (1.1 kg-m, 8.0 lb-ft)

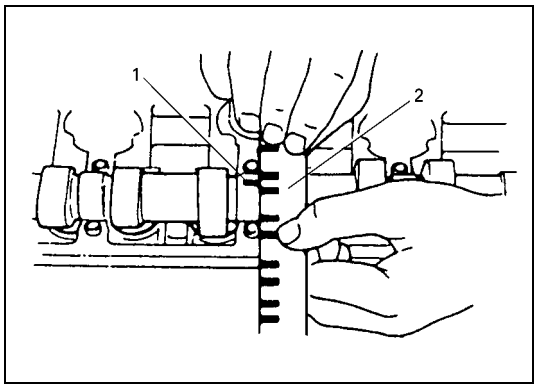

7) Remove housing, and using scale (2) on gaging plastic (1) envelop, measure gaging plastic width at its widest point.

Camshaft journal clearance

	Standard	Limit
Intake side No.1 housing	0.020 – 0.072 mm (0.0008 – 0.0028 in.)	0.10 mm (0.0039 in.)
Others	0.045 – 0.087 mm (0.0018 – 0.0034 in.)	0.12 mm (0.0047 in.)

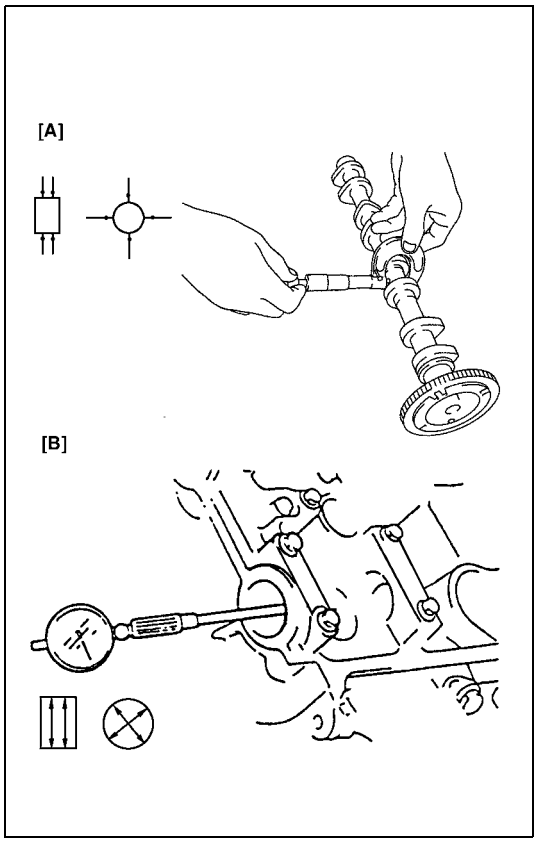

If measured camshaft journal clearance exceeds limit, measure journal (housing) bore and outside diameter of camshaft journal. Replace camshaft or cylinder head assembly whichever the difference from specification is greater.

Camshaft journal diameter [A]

Item	Standard
Intake side No.1 housing	26.940 – 26.955 mm (1.0606 – 1.0612 in.)
Exhaust side No.1 housing	26.934 – 26.955 mm (1.0604 – 1.0612 in.)
Others	22.934 – 22.955 mm (0.9029 – 0.9037 in.)

Camshaft journal bearing bore [B]

Item	Standard
Intake side No.1 housing	–
Exhaust side No.1 housing	27.000 – 27.021 mm (1.0630 – 1.0638 in.)
Others	23.000 – 23.021 mm (0.9055 – 0.9063 in.)

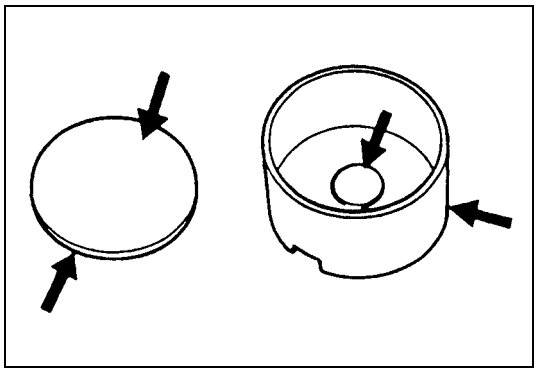

Wear of tappet and shim

Check tappet and shim for pitting, scratches or damage.
If any malcondition is found, replace.

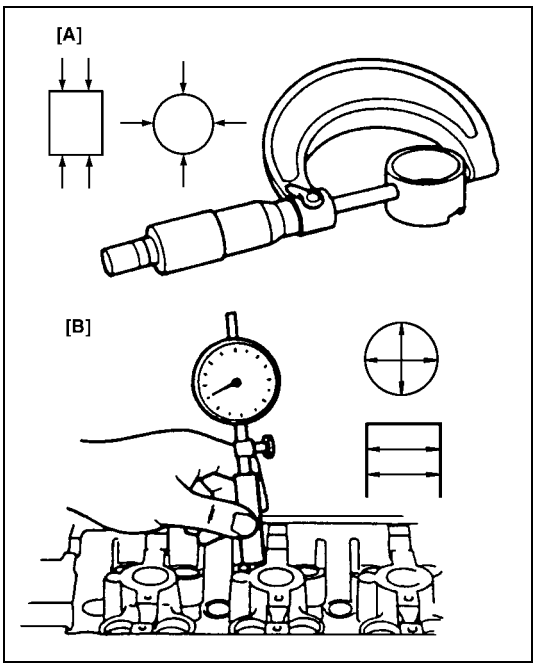

Measure cylinder head bore and tappet outside diameter to determine cylinder head-to-tappet clearance. If clearance exceeds limit, replace tappet or cylinder head.

Cylinder head to tappet clearance
Standard : 0.025 – 0.066 mm (0.0010 – 0.0026 in.)
Limit : 0.15 mm (0.0059 in.)

Tappet outside diameter [A]
Standard : 30.959 – 30.975 mm (1.2189 – 1.2195 in.)

Cylinder head tappet bore [B]
Standard : 31.000 – 31.025 mm (1.2205 – 1.2215 in.)

Valves and Cylinder Head Components

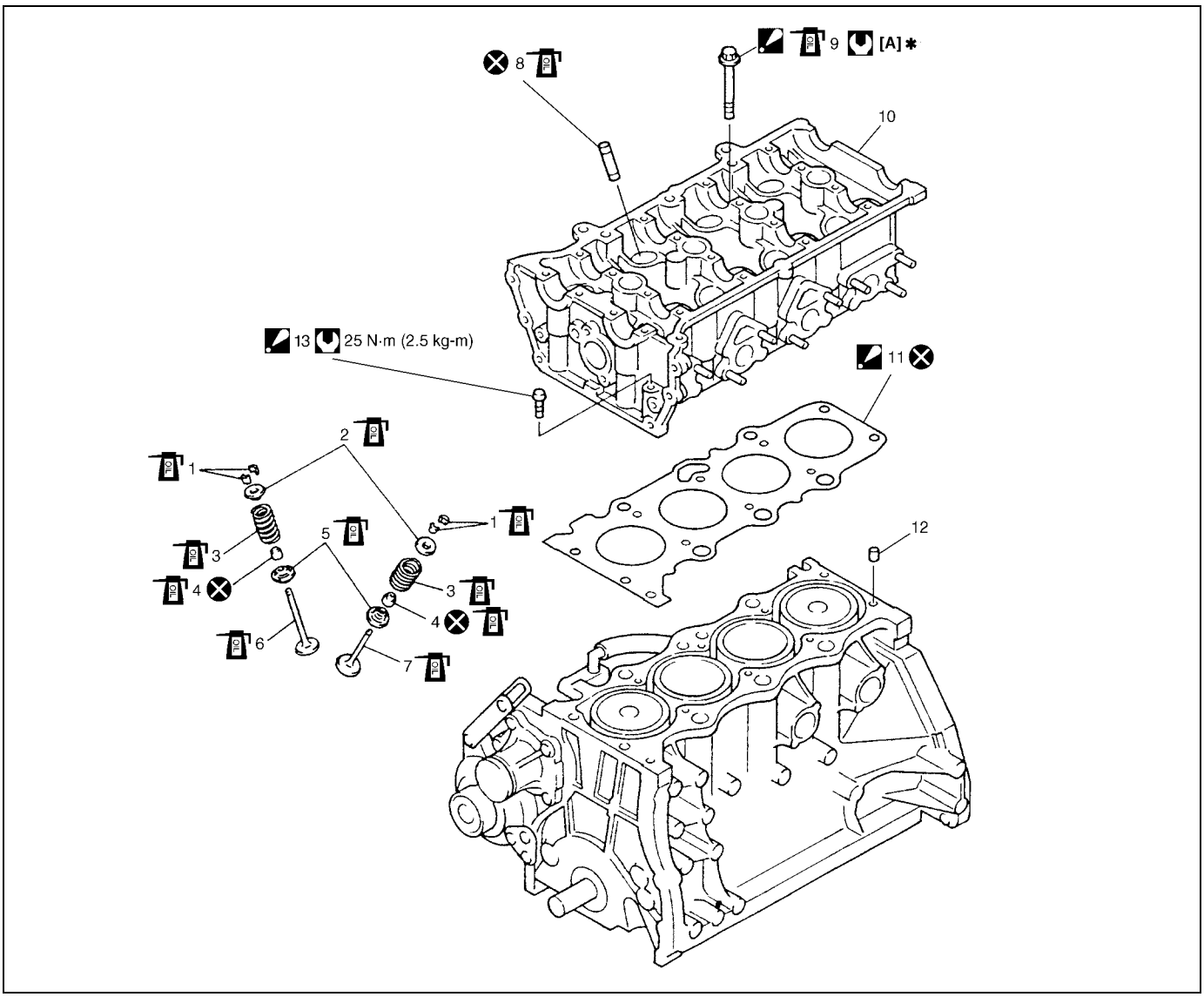

[A]✱ 1) Tighten all bolts at 20 N·m (2.0 kg-m) 2) Tighten all bolts at 40 N·m (4.0 kg-m) 3) Then retighten all bolts by turning through 60° 4) Repeat step 3) again	6. Intake valve	12. Knock pin
1. Valve cotters	7. Exhaust valve	13. Cylinder head bolt (M8) : Be sure to tighten cylinder head bolt (M8) after securing the other cylinder head bolt (M10).
2. Valve spring retainer	8. Valve guide	Tightening torque
3. Valve spring	9. Cylinder head bolt (M10) : Never reuse cylinder head bolts once disassembled it due to plastic deformation tightening. Be sure to use new cylinder head bolts when installing.	Do not reuse.
4. Valve stem seal	10. Cylinder head	Apply engine oil to sliding surface of each part.
5. Valve spring seat	11. Cylinder head gasket : "TOP" mark provided on gasket comes to crankshaft pulley side, facing up.	

Valves and Cylinder Head Removal and Installation

Removal

1) Remove engine assembly from vehicle referring to "Engine Assembly Removal and Installation" in this section.
2) Remove oil pan referring to "Oil Pan and Oil Pump Strainer Removal and Installation" in this section.
3) Remove cylinder head cover referring to "Cylinder Head Cover Removal and Installation" in this section.
4) Remove timing chain cover referring to Steps 2) to 7) of "Removal" in "Timing Chain Cover Removal and Installation" in this section.
5) Remove timing chain referring to Steps 2) to 6) of "Removal" under "Timing Chain Cover Removal and Installation" in this section.
6) Remove intake and exhaust camshafts referring to Steps 3) to 7) of "Removal" under "Camshaft, Tappet and Shim Removal and Installation" in this section.

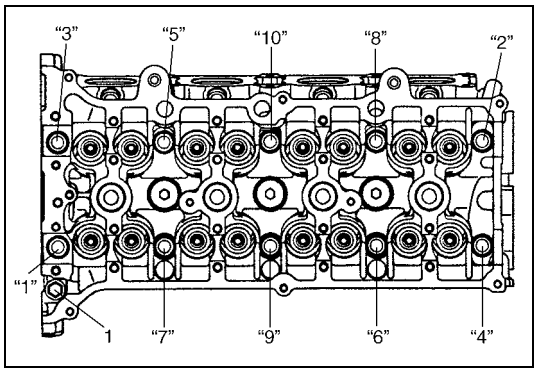

7) Loosen cylinder under head bolts in such order as indicated in figure by using a 12 corner socket wrenches and remove them.

NOTE:

- **Don't forget to remove bolt (M8) (1) as shown in figure.**
- **Never reuse cylinder head bolts once disassembled it due to plastic deformation tightening. Be sure to use new cylinder head bolts when installing.**

8) Check all around cylinder head for any other parts required to be removed or disconnected and remove or disconnect whatever necessary.
9) Remove exhaust manifold, if necessary, referring to "Exhaust Manifold Removal and Installation" in this section.
10) Remove cylinder head with intake manifold and exhaust manifold. Use lifting device, if necessary.

Installation

1) Clean mating surface of cylinder head and cylinder block. Remove oil, old gasket and dust from mating surface.

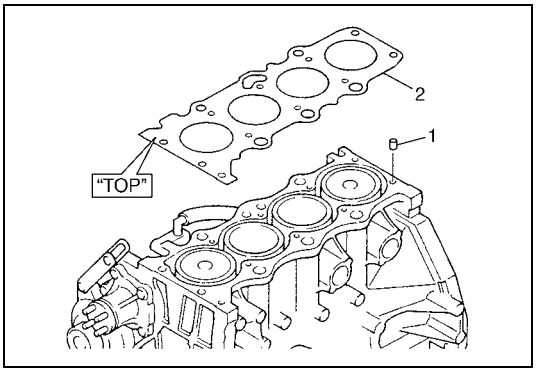

2) Install knock pins (1) to cylinder block.
3) Install new cylinder head gasket (2) to cylinder block. "TOP" mark provided on gasket comes to crankshaft pulley side, facing up (toward cylinder head side).

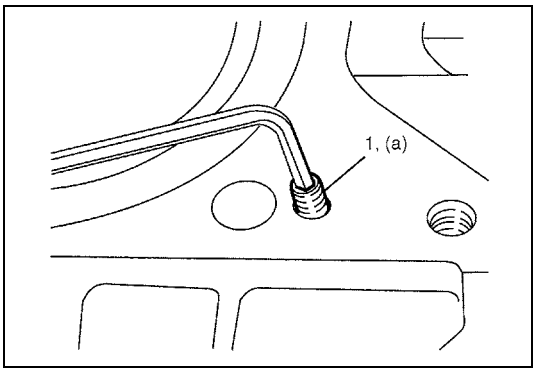

4) Make sure that oil jet (venturi plug) (1) is not clogged. If it is not installed, install it as specified torque.

Tightening torque
Venturi plug (a) : 5 N·m (0.5 kg-m, 3.5 lb-ft)

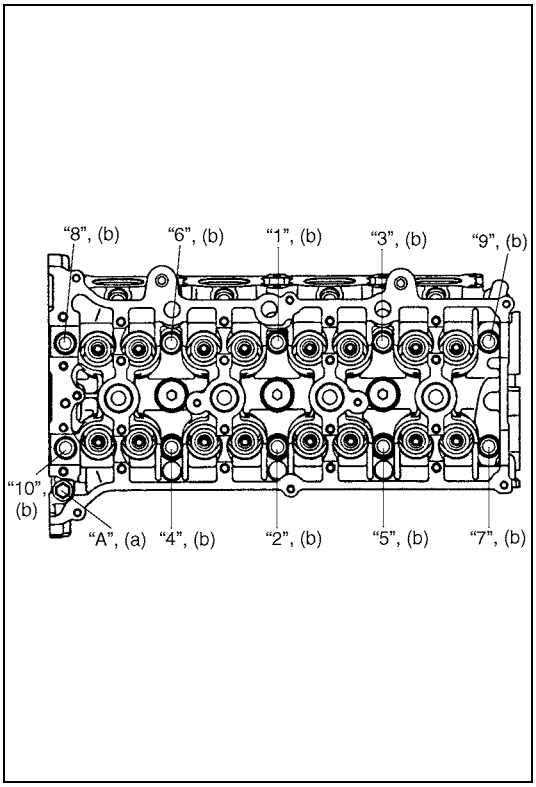

5) Install cylinder head to cylinder block.
   Apply engine oil to new cylinder head bolts and tighten them gradually as follows.
   a) Tighten cylinder head bolts ("1" – "10") to 20 N·m (2.0 kg-m, 14.5 lb-ft) according to numerical order as shown by using a 12 corner socket wrenches.
   b) In the same manner as in Step a), tighten them to 40 N·m (4.0 kg-m, 29.0 lb-ft).
   c) Turn all bolts 60° according to numerical order in figure.
   d) Repeat Step c).
   e) Tighten bolt "A" to specified torque.

NOTE:

Be sure to tighten M8 bolt ("A") after securing the other bolt.

Tightening torque
Cylinder head bolt for M8 (a) : 25 N·m (2.5 kg-m, 18.0 lb-ft)
Cylinder head bolts for M10
(b) : 20 N·m (2.0 kg-m, 14.5 lb-ft), 40 N·m (4.0 kg-m, 29.0 lb-ft) and then retighten by turning through 60° twice

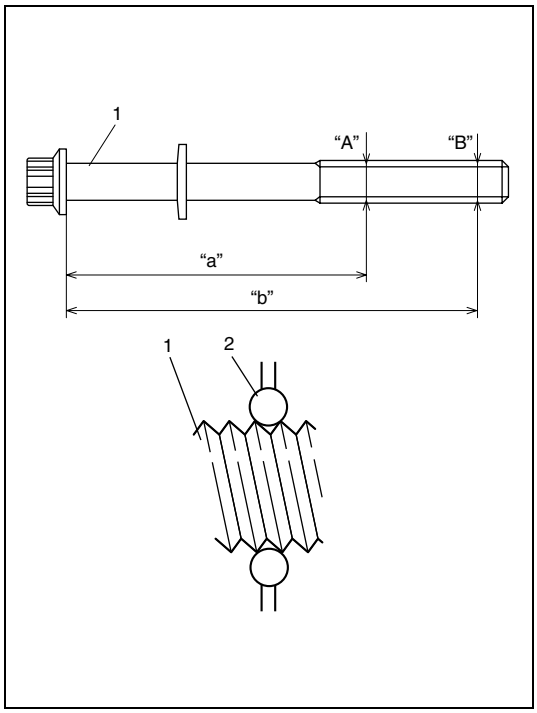

NOTE:

If they are reused, check thread diameters of cylinder head bolt (1) for deformation according to the follows and replace them with new ones if thread diameter difference exceeds limit.

Measure each thread diameter of cylinder head bolt (1) at "A" on 83.5mm(2.81in.) from seat side of flange bolt and "B" on 115mm(4.53in.) from seat side of flange bolt by using a micrometer (2).
Then calculate difference in diameters ("A" – "B").
If it exceeds limit, replace with new one.

Cylinder head bolt diameter measurement points
"a" : 83.5mm (2.81in.)
"b" : 115mm (4.53in.)

Cylinder head bolt diameter difference (deformation)
Limit ("A" – "B") : 0.1mm (0.004in.)

6) Install camshafts, tappet and shim referring to "Camshaft, Tappet and Shim Removal and Installation" in this section.
7) Install timing chain referring to "Timing Chain and Chain Tensioner Removal and Installation" in this section.
8) Install timing chain cover referring to "Timing Chain and Chain Tensioner Removal and Installation" in this section.
9) Install cylinder head cover referring to "Cylinder Head Cover Removal and Installation" in this section.
10) Install oil pan referring to "Oil Pan and Oil Pump Strainer Removal and Installation" in this section.

Valves and Cylinder Head Disassembly and Assembly

Disassembly

1) For ease in servicing cylinder head, remove intake manifold, injectors and exhaust manifold from cylinder head.

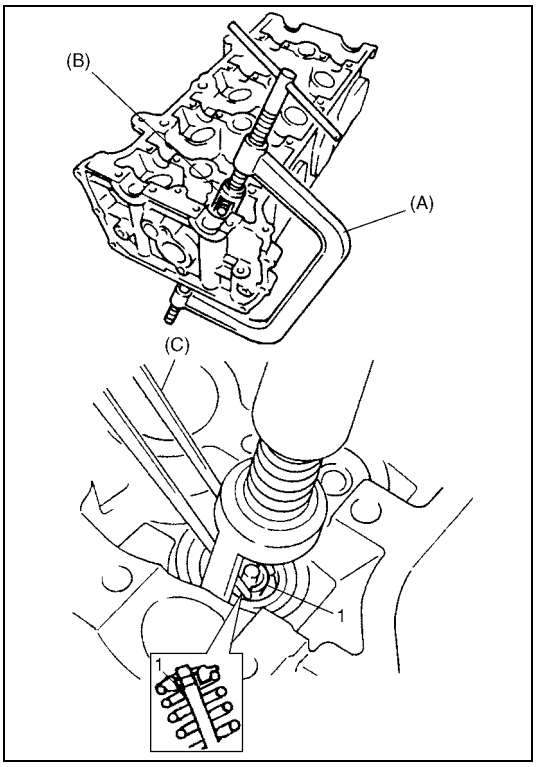

2) Using special tools (valve lifter), compress valve spring and then remove valve cotters (1) by using special tool (forceps).

Special tool
(A) : 09916-14510
(B) : 09916-14521
(C) : 09916-84511

3) Release special tools (valve lifter), and remove spring retainer and valve spring.
4) Remove valve from combustion chamber side.

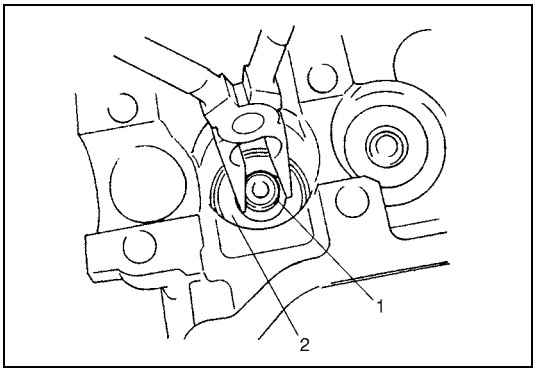

5) Remove valve stem seal (1) from valve guide and valve spring seat (2).

NOTE:

Do not reuse valve stem seal (1) once disassembled. Be sure to use new valve stem seal when assembling.

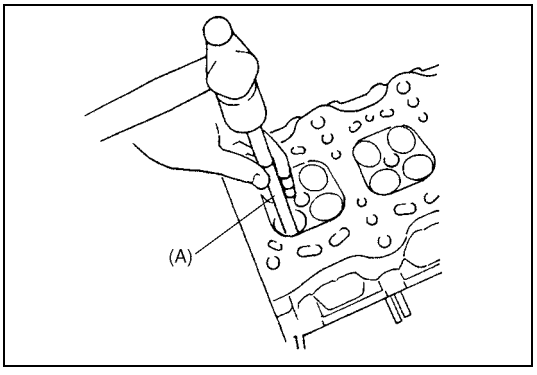

6) Using special tool (valve guide remover), drive valve guide out from combustion chamber side to valve spring side.

Special tool
(A) : 09916-44910

NOTE:

Do not reuse valve guide once disassembled. Be sure to use new valve guide (oversize) when assembling.

7) Place disassembled parts except valve stem seal and valve guide in order so that they can be installed in their original position.

Assembly

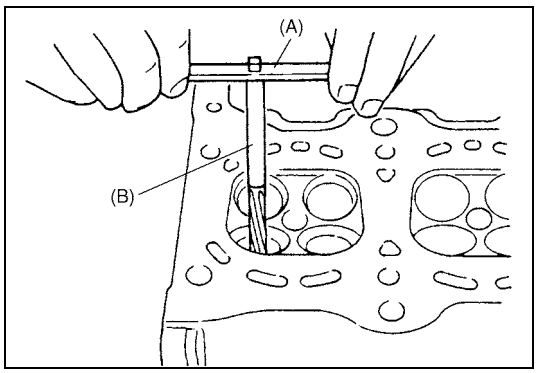

1) Before installing valve guide into cylinder head, ream guide hole with special tool (10.5 mm reamer) so as to remove burrs and make it truly round.

Special tool
(A) : 09916-34542
(B) : 09916-37320

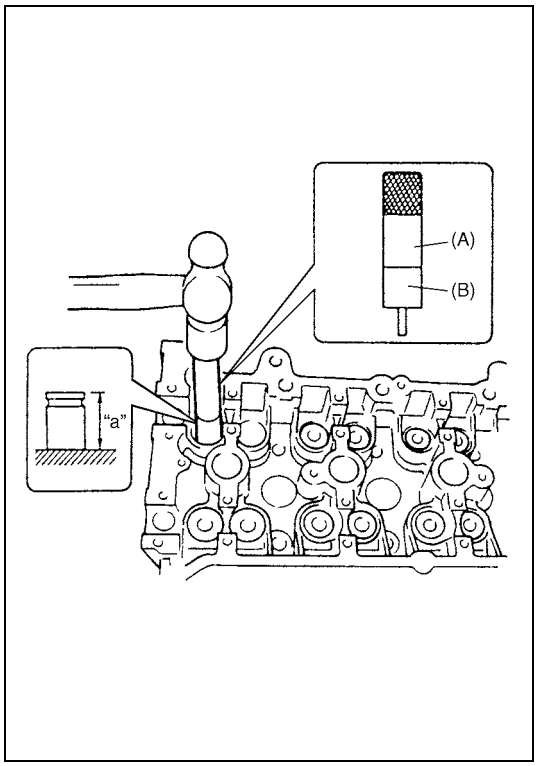

2) Install valve guide to cylinder head.
Heat cylinder head uniformly to a temperature of 80 to 100 °C (176 to 212 °F) so that head will not be distorted, and drive new valve guide into hole with special tools. Drive in new valve guide until special tool (Valve guide installer) contacts cylinder head.
After installing, make sure that valve guide protrudes by specified dimension "a" from cylinder head.

Special tool
(A) : 09916-58210
(B) : 09916-56011

NOTE:

- **Never reuse once-disassembled valve guide. Make sure to install new valve guide.**
- **Intake and exhaust valve guides are identical.**

Specification for valve guide protrusion "a"
Intake side : 11.3 mm (0.44 in.)
Exhaust side : 11.3 mm (0.44 in.)

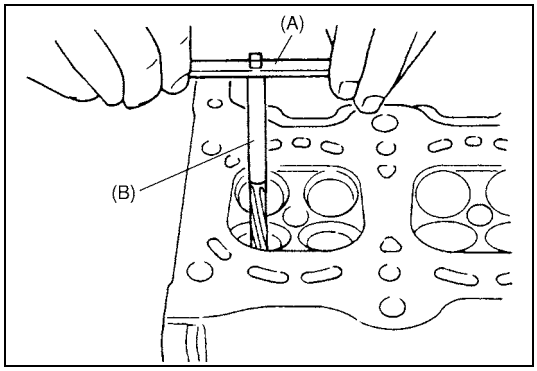

3) Ream valve guide bore with special tool (5.5 mm reamer). After reaming, clean bore.

Special tool
(A) : 09916-34542
(B) : 09916-34550

4) Install valve spring seat to cylinder head.

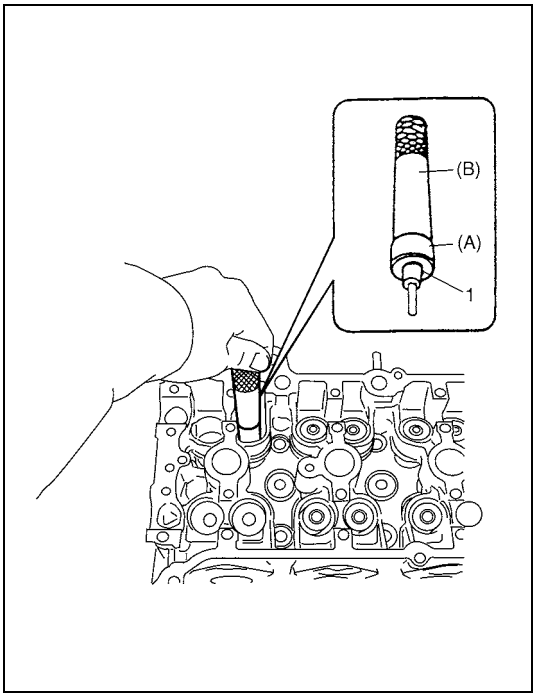

5) Install new valve stem seal (1) to valve guide.
After applying engine oil to seal and spindle of special tool (Valve guide installer handle), fit oil seal to spindle, and then install seal to valve guide by pushing special tool by hand.
After installing, check to be sure that seal is properly fixed to valve guide.

Special tooll
(A) : 09916-58210
(B) : 09917-98221

NOTE:

- **Do not reuse once-disassembled seal. Be sure to install new seal.**
- **When installing, never tap or hit special tool with a hammer or else. Install seal to guide only by pushing special tool by hand. Tapping or hitting special tool may cause damage to seal.**

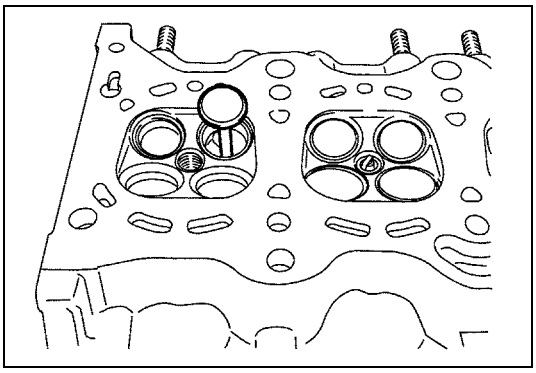

6) Install valve to valve guide.
Before installing valve to valve guide, apply engine oil to stem seal, valve guide bore and valve stem.

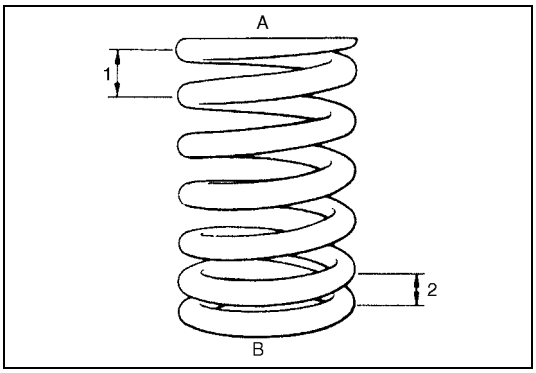

7) Install valve spring and spring retainer.
Each valve spring has top end (large-pitch end (1)) and bottom end (small-pitch end (2)). Be sure to position spring in place with its bottom end (small-pitch end) facing the bottom (valve spring seat side).

A :	Valve spring retainer side
B :	Valve spring seat side

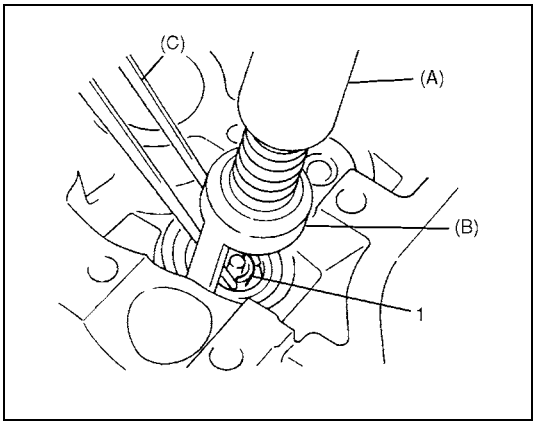

8) Using special tools (Valve lifter), compress valve spring and fit two valve cotters (1) into groove in valve stem.

Special tool
(A) : 09916-14510
(B) : 09916-14521
(C) : 09916-84511

NOTE:

When compressing the valve spring, be carefully to free from damage in inside face of tappet installing hole.

9) Install intake manifold referring to “Intake Manifold Removal and Installation” in this section.
10) Install fuel injectors referring to “Fuel injector removal and installation” in Section 6E1.
11) Install exhaust manifold referring to “Exhaust Manifold Removal and Installation” in this section.

Valves and Cylinder Head Inspection

Valve guides

Valve stem-to-guide clearance

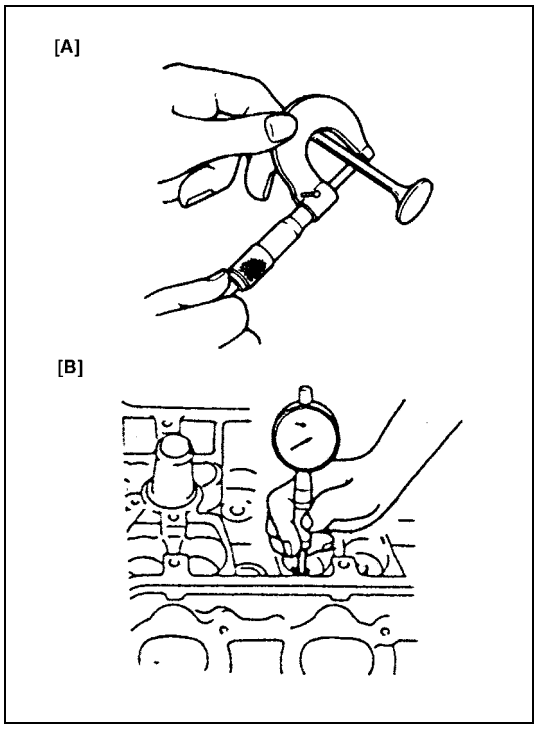

Using a micrometer and bore gauge, take diameter readings on valve stems and guides to check stem-to-guide clearance. Be sure to take reading at more than one place along the length of each stem and guide.
If clearance exceeds limit, replace valve and valve guide.

Valve stem-to-guide clearance

Item	Standard	Limit
In	0.020 – 0.047 mm (0.0008 – 0.0018 in.)	0.07 mm (0.0028 in.)
Ex	0.045 – 0.072 mm (0.0017 – 0.0028 in.)	0.09 mm (0.0035 in.)

Valve stem diameter [A] standard
In : 5.465 – 5.480 mm (0.2150 – 0.2157 in.)
Ex : 5.440 – 5.455 mm (0.2142 – 0.2148 in.)

Valve guide bore [B] standard
In and Ex : 5.500 – 5.512 mm (0.2165 – 0.2170 in.)

Valve stem end deflection

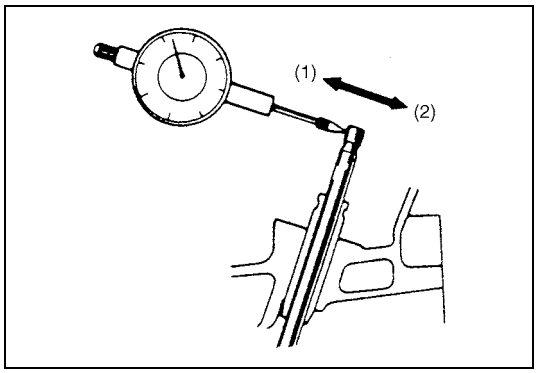

If bore gauge is not available, check end deflection of valve stem with a dial gauge instead.
Move stem end in directions (1) and (2) to measure end deflection.
If deflection exceeds its limit, replace valve stem and valve guide.

Valve stem end deflection limit
In : 0.14 mm (0.005 in.)
Ex : 0.18 mm (0.007 in.)

Valves

Visual inspection

- Remove all carbon from valves.
- Inspect each valve for wear, burn or distortion at its face and stem end, as necessary, replace it.

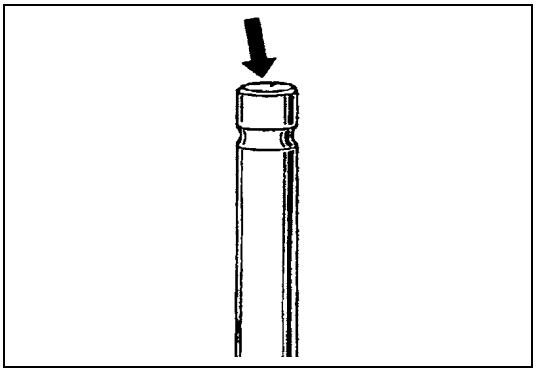

- Inspect valve stem end face for pitting and wear. If pitting or wear is found there, valve stem end may be resurfaced, but not too much to grind off its chamber. When it is worn out too much that its chamber is gone, replace valve.

Valve head thickness

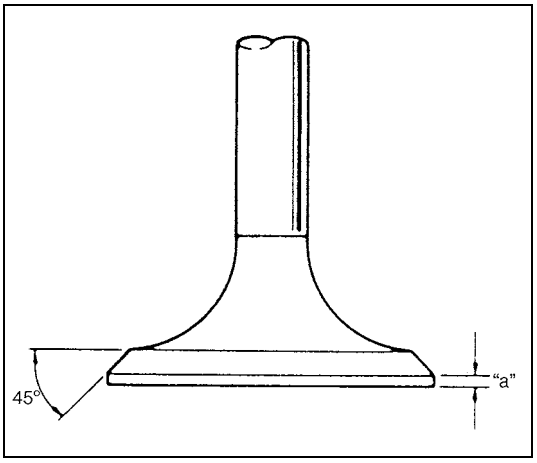

Measure thickness "a" of valve head. If measured thickness exceeds limit, replace valve.

Valve head thickness "a" (In and Ex)
Standard : 1.25 – 1.55 mm (0.049 – 0.061 in.)
Limit : 0.9 mm (0.035 in.)

Valve head radial runout

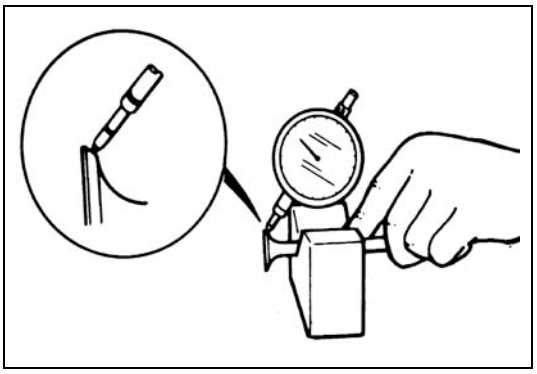

Check each valve for radial runout with a dial gauge and "V" block. To check runout, rotate valve slowly. If runout exceeds its limit, replace valve.

Limit on valve head radial runout
0.08 mm (0.003 in.)

Seating contact width

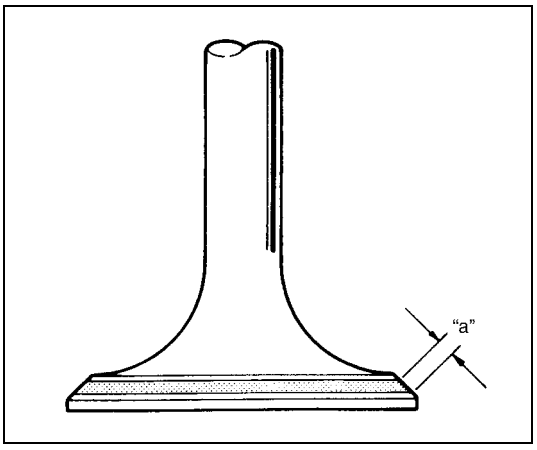

Create contact pattern on each valve in the usual manner, i.e. by giving uniform coat of marking compound to valve seat and by rotatingly tapping seat with valve head. Valve lapper (tool used in valve lapping) must be used.
Pattern produced on seating face of valve must be a continuous ring without any break, and the width of pattern must be within specified range.

Standard seating width "a" revealed by contact pattern on valve face
In and Ex : 1.0 - 1.4 mm (0.0389 - 0.0551 in.)

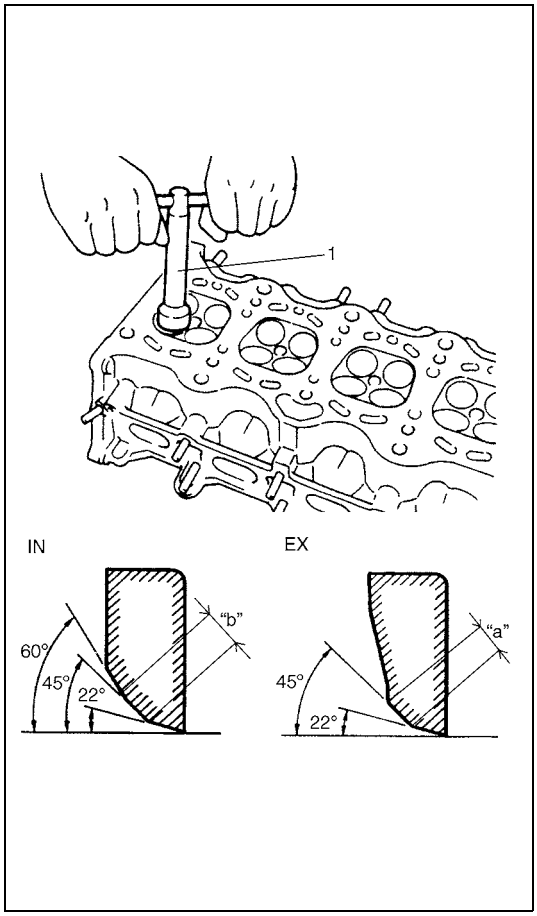

Valve seat repair

A valve seat not producing a uniform contact with its valve or showing width of seating contact that is out of specified range must be repaired by regrinding or by cutting and regrinding and finished by lapping.

1) EXHAUST VALVE SEAT : Use valve seat cutters (1) to make two cuts as illustrated in figure. Two cutters must be used: the first for making 22° angle, and the second for making 45° angle. The second cut must be made to produce desired seat width.

Seat width for exhaust valve seat
"a" : 1.0 – 1.4 mm (0.0389 – 0.0551 in.)

2) INTAKE VALVE SEAT : Use valve seat cutters (1) to make three cuts as illustrated in figure. Three cutters must be used: the 1st for making 15° angle, the 2nd for making 60° angle, and 3rd for making 45° angle. The 3rd cut (45°) must be made to produce desired seat width.

Seat width for intake valve seat
"b" : 1.0 – 1.4 mm (0.0389 – 0.0551 in.)

3) VALVE LAPPING : Lap valve on seat in two steps, first with coarse size lapping compound applied to face and the second with fine-size compound, each time using valve lapper according to usual lapping method.

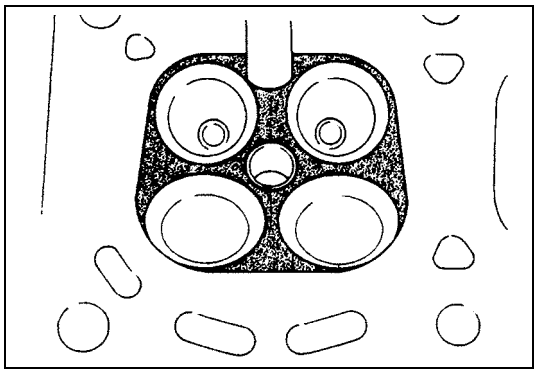

Cylinder head

- Remove all carbon deposits from combustion chambers.

NOTE:

Do not use any sharp-edged tool to scrape off carbon deposits. Be careful not to scuff or nick metal surfaces when decarbonizing. The same applies to valves and valve seats, too.

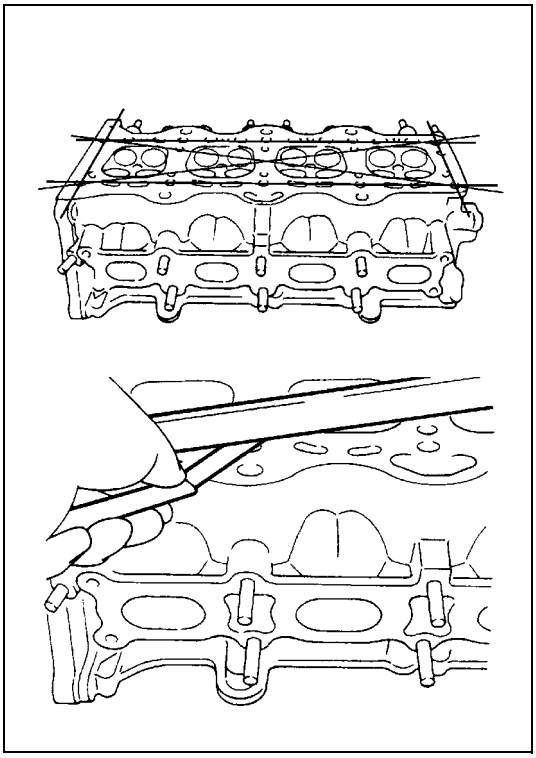

- Check cylinder head for cracks on intake and exhaust ports, combustion chambers, and head surface.
  Using a straightedge and thickness gauge, check flatness of gasketed surface at a total of 6 locations. If distortion limit, given below, is exceeded, correct gasketed surface with a surface plate and abrasive paper of about #400 (Waterproof silicon carbide abrasive paper): place abrasive paper on and over surface plate, and rub gasketed surface against paper to grind off high spots. Should this fail to reduce thickness gauge readings to within limit, replace cylinder head.
  Leakage of combustion gases from this gasketed joint is often due to warped gasketed surface: such leakage results in reduced power output.

Limit of distortion for cylinder head surface on piston side : 0.03 mm (0.001 in.)

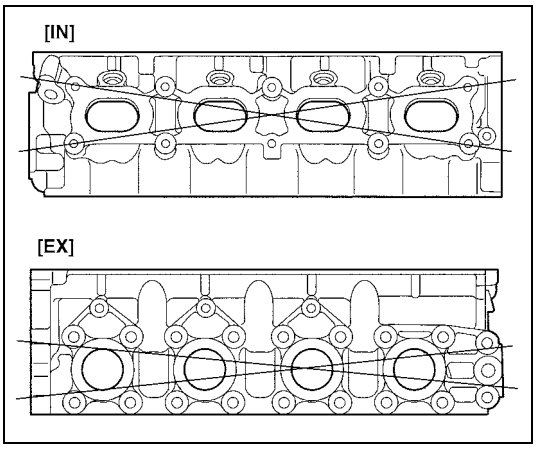

- Distortion of manifold seating faces:
  Check seating faces of cylinder head for manifolds, using a straightedge and thickness gauge, in order to determine whether these faces should be corrected or cylinder head replaced.

Limit of distortion for cylinder head surface on intake and exhaust manifold
0.05 mm (0.002 in.)

Valve springs

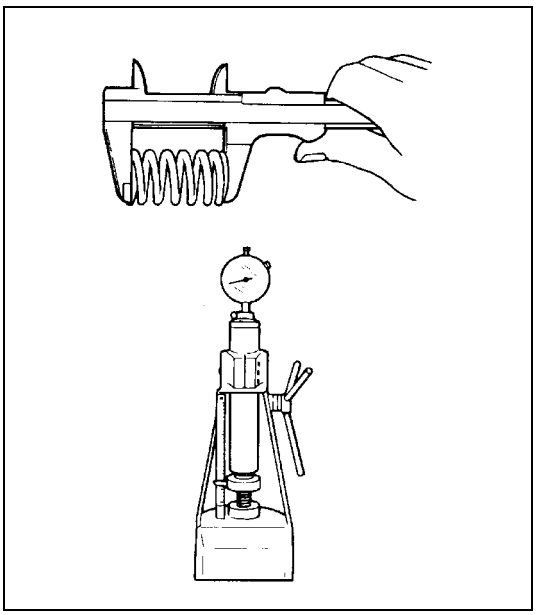

Valve spring free length and preload

Referring to data given below, check to be sure that each spring is in sound condition, free of any evidence of breakage or weakening. Remember, weakened valve springs can cause chatter, not to mention possibility of reducing power output due to gas leakage caused by decreased seating pressure.

Valve spring free length
Standard : 36.83 mm (1.450 in.)
Limit : 35.83 mm (1.411 in.)

Valve spring preload
Standard : 107 – 125 N (10.7 – 12.5 kg) for 31.50 mm (23.6 – 27.6 lb/1.240 in.)
Limit : 102 N (10.2 kg) for 31.5 mm (22.5 lb/1.240 in.)

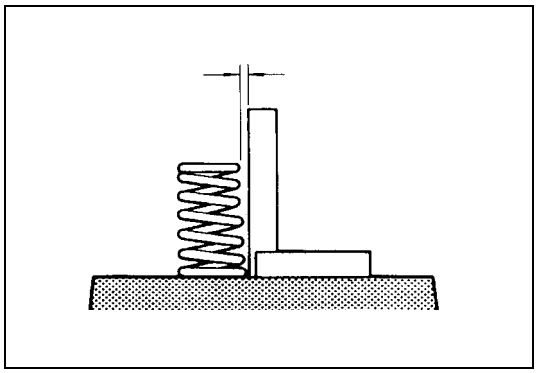

Spring squareness

Use a square and surface plate to check each spring for squareness in terms of clearance between end of valve spring and square. Valve springs found to exhibit a larger clearance than limit given below must be replaced.

Valve spring squareness limit
1.6 mm (0.079 in.)

Pistons, Piston Rings, Connecting Rods and Cylinders Components

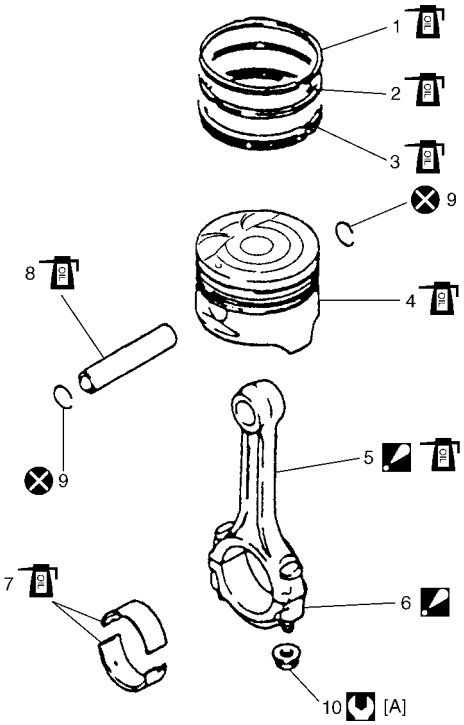

	[A] : 1) Tighten all nuts to 15 N·m (1.5 kg-m) 2) Then retighten all nuts by turning through 45° 3) Repeat step 2) again	7.	Connecting rod bearing
	1. Top ring	8.	Piston pin
	2. 2nd ring	9.	Piston pin circlip
	3. Oil ring	10.	Bearing cap nut
	4. Piston		Tightening torque
	5. Connecting rod : Apply engine oil to sliding surface except inner surface of big end, and rod bolts. Make sure rod bolt diameter when reuse it due to plastic deformation tightening. Refer to “INSPECTION” of “Connecting rod”.		Apply engine oil to sliding surface of each parts.
	6. Connecting rod bearing cap : Point arrow mark on cap to crankshaft pulley side.		Do not reuse.

Pistons, Piston Rings, Connecting Rods and Cylinders Removal and Installation

Removal

1) Remove engine assembly from vehicle referring to “Engine Assembly Removal and Installation” in this section.
2) Remove cylinder head referring to “Valves and Cylinder Head Removal and Installation”.
3) Mark cylinder number on all pistons, connecting rods and connecting rod caps using silver pencil or quick drying paint.
4) Remove rod bearing caps.

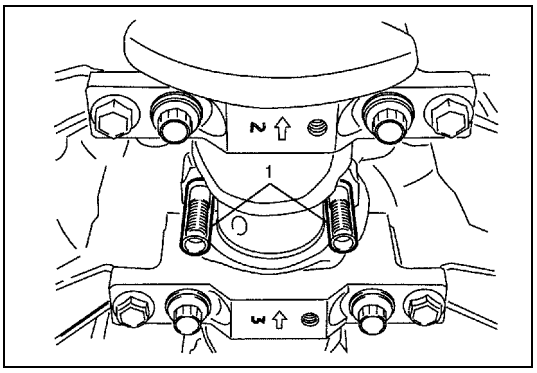

5) Install guide hose (1) over threads of rod bolts.
   This prevents damage to bearing journal and rod bolt threads when removing connecting rod.
6) Decarbonize top of cylinder bore before removing piston from cylinder.
7) Push piston and connecting rod assembly out through the top of cylinder bore.

Installation

1) Apply engine oil to pistons, rings, cylinder walls, connecting rod bearings and crank pins.

NOTE:

Do not apply oil between connecting rod and bearing or between bearing cap and bearing.

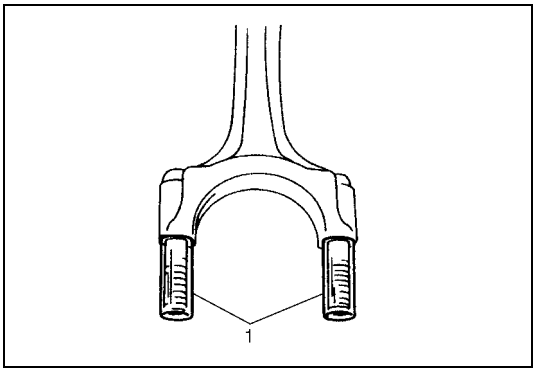

2) Install guide hoses (1) over connecting rod bolts.
   These guide hoses protect crank pin and threads of rod bolt from damage during installation of connecting rod and piston assembly.

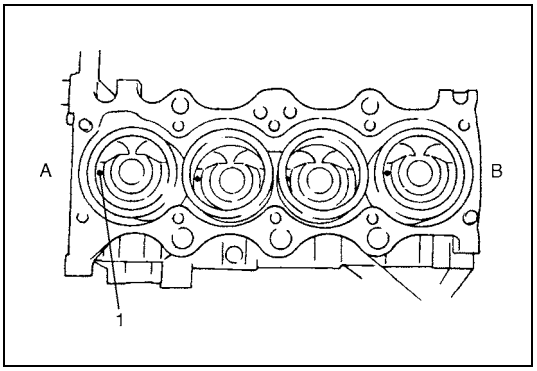

3) When installing piston and connecting rod assembly into cylinder bore, point front mark (1) on piston head to crankshaft pulley side.

A :	Crankshaft pulley side
B :	Flywheel side

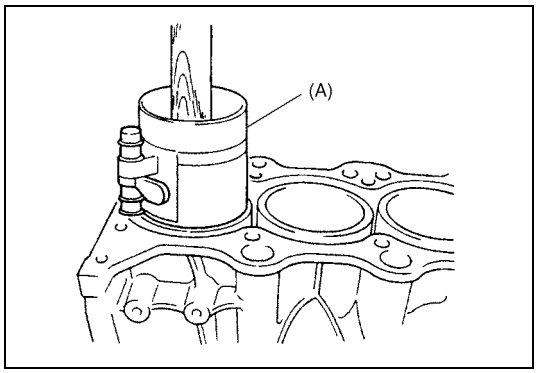

4) Install piston and connecting rod assembly into cylinder bore. Use special tool (Piston ring compressor) to compress rings. Guide connecting rod into place on crankshaft.
Using a hammer handle, tap piston head to install piston into bore. Hold ring compressor firmly against cylinder block until all piston rings have entered cylinder bore.

Special tool
(A) : 09916-77310

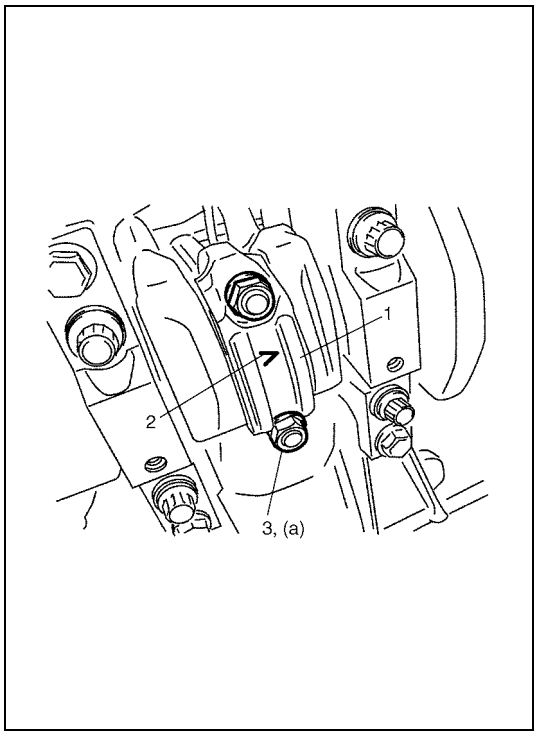

5) Install bearing cap (1):
Point arrow mark (2) on cap to crankshaft pulley side.
After applying oil to rod bolts and tighten cap nuts (3) gradually as follows.
a) Tighten all cap nuts to 15 N·m (1.5 kg-m, 11.0 lb-ft).
b) Retighten them to 45°.
c) Repeat Step b) once again.

Tightening torque
Connecting rod bearing cap nuts
(a) : 15 N·m (1.5 kg-m, 11.0 lb-ft), and then retighten by turning through 45° twice.

NOTE:

Before installing bearing cap, make sure that checking for connecting rod bolt deformation.
Refer to "Connecting rod" of "Pistons, Piston Rings, Connecting Rods and Cylinders Inspection" in this section.

6) Install cylinder head referring to "Valves and Cylinder Head Removal and Installation" in this section.

Pistons, Piston Rings, Connecting Rods and Cylinders Disassembly and Assembly

Disassembly

1) Using piston ring expander, remove two compression rings (Top and 2nd) and oil ring from piston.
2) Remove piston pin from connecting rod as follows.

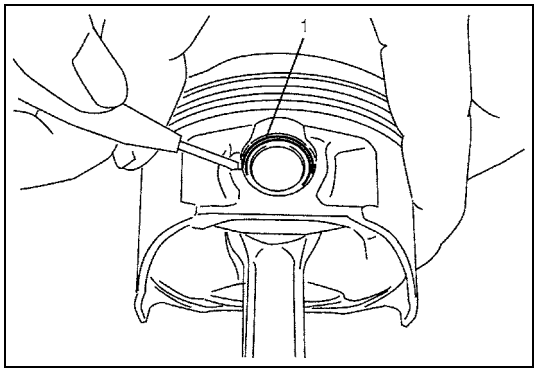

a) Ease out piston pin circlips (1), as shown.

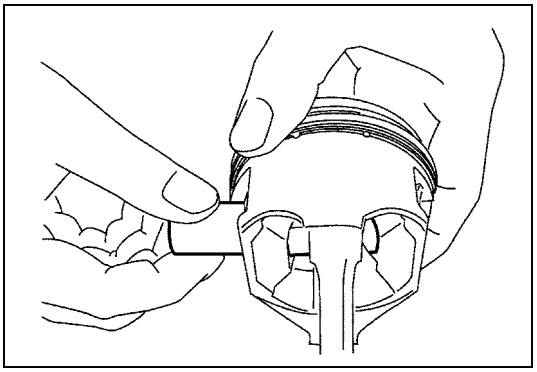

b) Force piston pin out.

Assembly

1) Decarbonize piston head and ring grooves using a suitable tool.

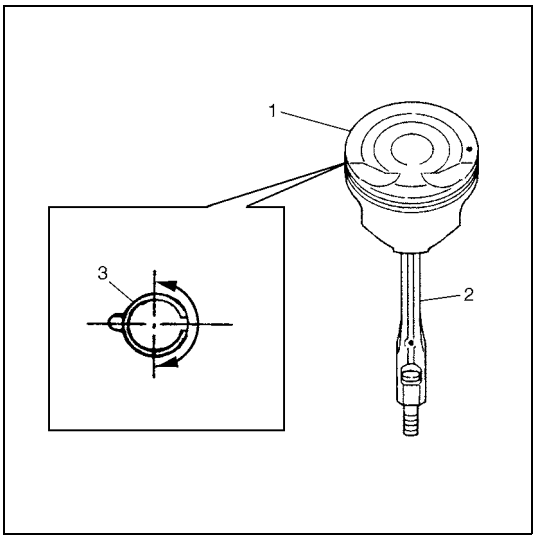

2) Install piston pin to piston (1) and connecting rod (2) :
   a) After applying engine oil to piston pin and piston pin holes in piston and connecting rod.
   b) Fit connecting rod as shown in figure.
   c) Insert piston pin to piston and connecting rod.
   d) Install piston pin circlips (3).

NOTE:

Circlip should be installed with its cut part facing as shown in figure. Install so that circlip end gap comes within such range as indicated by arrow.

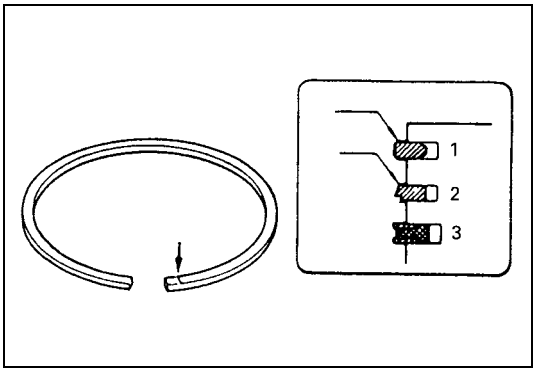

3) Install piston rings to piston :
   a) As indicated in figure, 1st and 2nd rings have “T” mark respectively. When installing these piston rings to piston, direct marked side of each ring toward top of piston.
   b) 1st ring (1) differs from 2nd ring (2) in thickness, shape and color of surface contacting cylinder wall.
   Distinguish 1st ring from 2nd ring by referring to figure.
   c) When installing oil ring (3) install spacer first and then two rails.

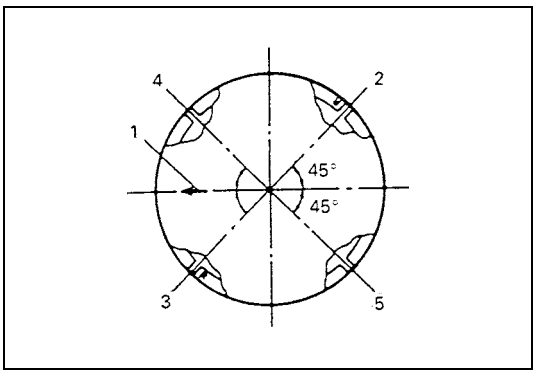

4) After installing three rings (1st, 2nd and oil rings), distribute their end gaps as shown in figure.

1. Arrow mark
2. 1st ring end gap
3. 2nd ring end gap and oil ring spacer gap
4. Oil ring upper rail gap
5. Oil ring lower rail gap

Pistons, Piston Rings, Connecting Rods and Cylinders Inspection

Cylinder

Visual inspection

Inspect cylinder walls for scratches, roughness or ridges which indicate excessive wear. If cylinder bore is very rough or deeply scratched or ridged, rebore cylinder and use oversize piston.

Cylinder bore diameter, taper and out-of-round

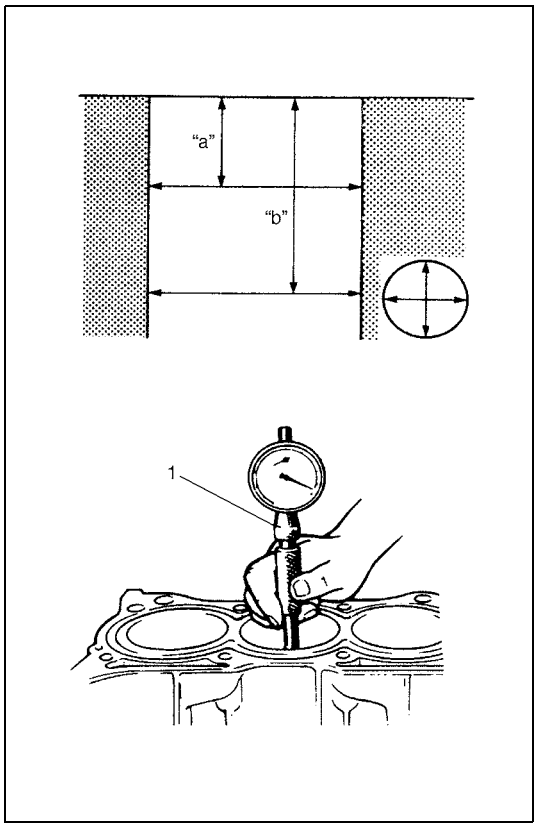

Using a cylinder gauge (1), measure cylinder bore in thrust and axial directions at two positions ("a" and "b") as shown in figure.
If any of the following conditions is noted, rebore cylinder.

1) Cylinder bore dia. exceeds limit.
2) Difference of measurements at two positions exceeds taper limit.
3) Difference between thrust and axial measurements exceeds out-of-round limit.

Cylinder bore diameter
Standard : 78.00 – 78.014 mm (3.0709 – 3.0714 in.)
Limit : 78.050 mm (3.073 in.)

Cylinder taper and out-of-round
Limit : 0.10 mm (0.004 in.)

"a" : 50 mm (1.96 in.)
"b" : 100 mm (3.94 in.)

NOTE:

If any one of four cylinders has to be rebored, rebore all four to the same next oversize. This is necessary for the sake of uniformity and balance.

Pistons

Visual inspection

Inspect piston for faults, cracks or other damaged.
Damaged or faulty piston should be replaced.

Piston diameter

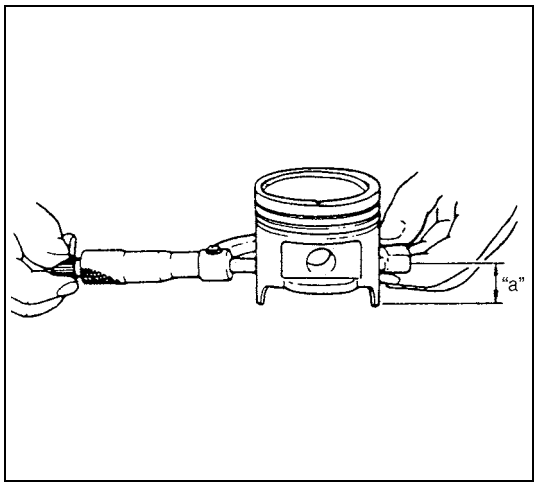

As indicated in figure, piston diameter should be measured at a position 19.5 mm (0.77 in.) from piston skirt end in the direction perpendicular to piston pin.

Piston diameter specification

Standard size	**77.953 – 77.968 mm (3.0690 – 3.0696 in.)**
Oversize 0.50 mm (0.0196 in.)	**78.453 – 78.468 mm (3.0887 – 3.0893 in.)**

"a" : 19.5 mm (0.77 in.)

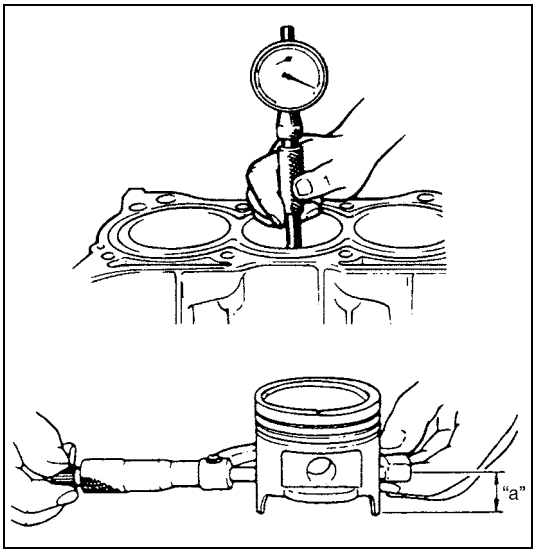

Piston clearance

Measure cylinder bore diameter and piston diameter to find their difference which is piston clearance. Piston clearance should be within specification as given below. If it is out of specification, rebore cylinder and use oversize piston.

Piston clearance
Standard : 0.032 – 0.061 mm (0.0013– 0.0024 in.)

NOTE:

Cylinder bore diameters used here are measured in thrust direction at two positions.

"a" : 19.5 mm (0.77 in.)

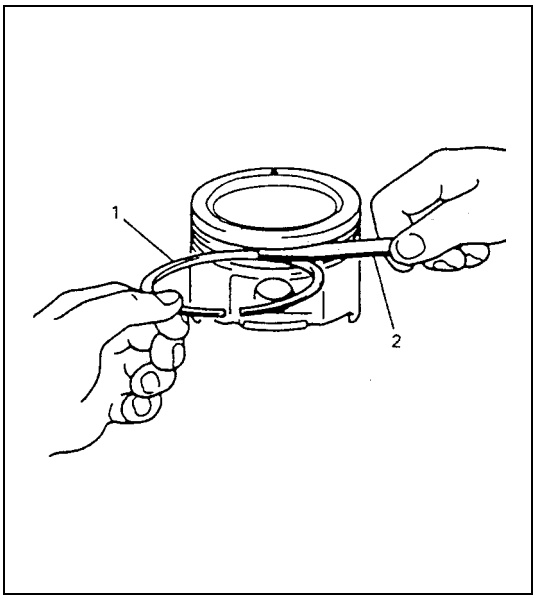

Ring groove clearance

Before checking, piston grooves must be clean, dry and free of carbon deposits.
Fit new piston ring (1) into piston groove, and measure clearance between ring and ring land by using thickness gauge (2). If clearance is out of limit, replace piston.

Ring groove clearance
Top ring
Standard : 0.03 – 0.07 mm (0.0012 – 0.0028 in.)
Limit : 0.12 mm (0.0047 in.)
2nd ring
Standard : 0.02 – 0.06 mm (0.0008 – 0.0024 in.)
Limit : 0.10 mm (0.0039 in.)
Oil ring
Standard : 0.03 – 0.17 mm (0.0012 – 0.0067 in.)

Piston pin

Visual inspection

Check piston pin, connecting rod small end bore and piston bore for wear or damage, paying particular attention to condition of small end bore bush. If pin, connecting rod small end bore or piston bore is badly worn or damaged, replace pin, connecting rod and/or piston.

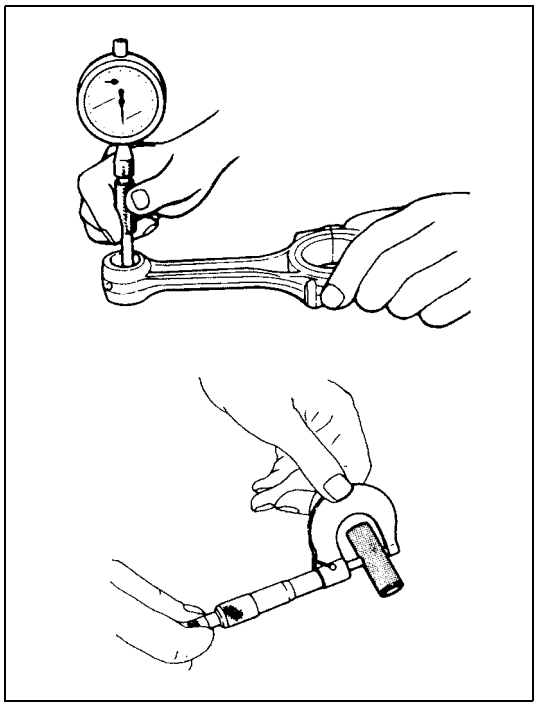

Piston pin clearance

Check piston pin clearance in small end and piston. Replace connecting rod and/or piston if its small end is badly worn or damaged or if measured clearance exceeds limit.

Piston pin clearance in connecting rod small end
Standard : 0.003 – 0.014 mm (0.0001 – 0.0006 in.)
Limit : 0.05 mm (0.0020 in.)

Piston pin clearance in piston
Standard : 0.006 – 0.017 mm (0.00024 – 0.00067 in.)
Limit : 0.05 mm (0.0020 in.)

Small-end bore
20.003 – 20.011 mm (0.7875 – 0.7878 in.)

Piston pin dia.
19.997 – 20.000 mm (0.7873 – 0.7874 in.)

Piston bore
20.006 – 20.014 mm (0.7876 – 0.7880 in.)

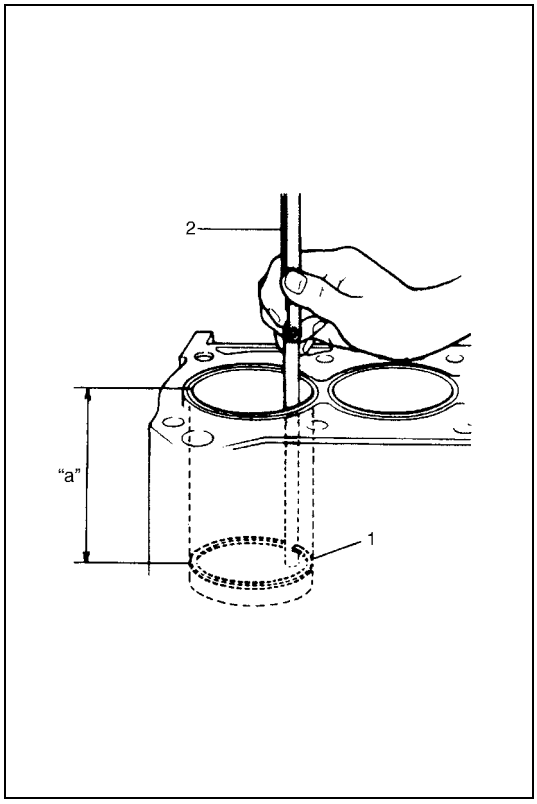

Piston rings

Piston ring end gap

To measure end gap, insert piston ring (1) into cylinder bore and then measure the gap by using thickness gauge (2).
If measured gap exceeds limit, replace ring.

NOTE:
Decarbonize and clean top of cylinder bore before inserting piston ring.

Piston ring end gap

Item	Standard	Limit
Top ring	0.20 – 0.35 mm (0.0079 – 0.0138 in.)	0.7 mm (0.0276 in.)
2nd ring	0.30 – 0.45 mm (0.0118 – 0.0177 in.)	1.0 mm (0.0394 in.)
Oil ring	0.20 – 0.70 mm (0.0079 – 0.0276 in.)	1.2 mm (0.0472 in.)

"a" : 120 mm (4.72 in.)

Connecting rod

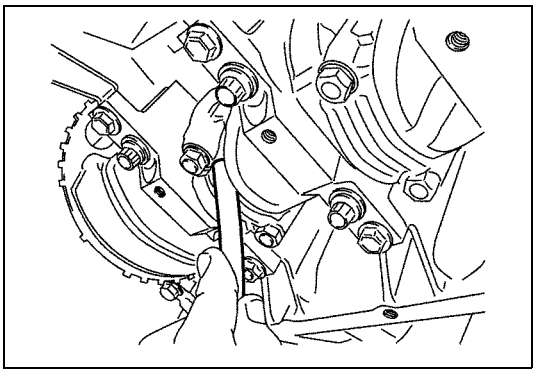

Big-end side clearance

Check big-end of connecting rod for side clearance, with rod fitted and connected to its crank pin in the normal manner. If measured clearance is found to exceed its limit, replace connecting rod.

Big-end side clearance
Standard : 0.25 - 0.40 mm (0.0098 - 0.0157 in.)
Limit : 0.55 mm (0.0217 in.)

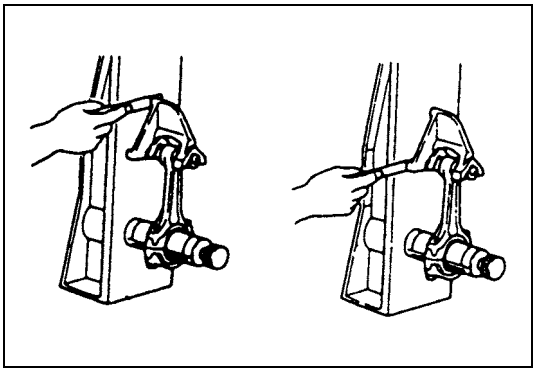

Connecting rod alignment

Mount connecting rod on aligner to check it for bow and twist. If the measured value exceeds the limit, replace it.

Connecting rod alignment
Limit on bow : 0.05 mm (0.0020 in.)
Limit on twist : 0.10 mm (0.0039 in.)

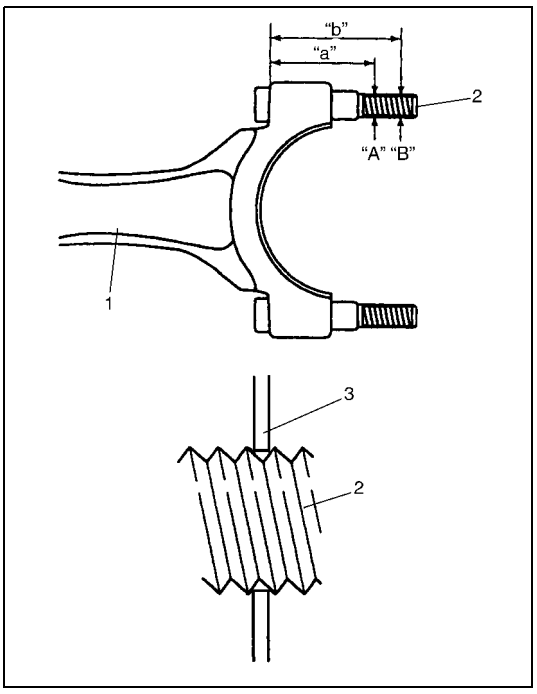

Connecting rod bolt deformation (Plastic deformation tightening bolt)

Measure each thread diameter of connecting rod (1) bolt (2) at "A" on 32 mm (1.25 in.) from bolt mounting surface and "B" on 40 mm (1.57 in.) from bolt mounting surface by using a micrometer (3). Calculate difference in diameters ("A" – "B"). If it exceeds limit, replace connecting rod.

Connecting rod bolt measurement points
"a" : 32 mm (1.25 in.)
"b" : 40 mm (1.57 in.)

Connecting rod bolt diameter difference limit ("A" – "B") : 0.1 mm (0.004 in.)

Crank pin and connecting rod bearings

Crank pin diameter

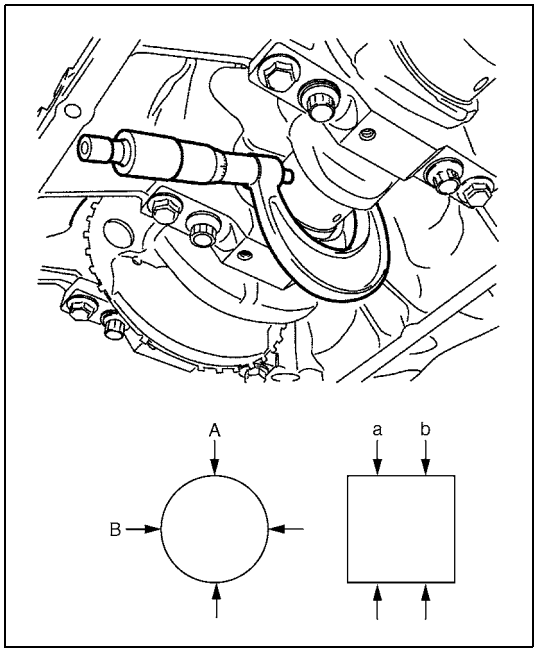

Inspect crank pin for uneven wear or damage. Measure crank pin for out-of-round or taper with a micrometer. If crank pin is damaged or out-of round or taper is out of limit, replace crankshaft or regrind crank pin to undersize and use undersize bearing.

Crank pin diameter

Connecting rod bearing size	Crank pin diameter
Standard	41.982 – 42.000 mm (1.6528 – 1.6535 in.)
Undersize 0.25 mm (0.0098 in.)	41.732 – 41.750 mm (1.6430 – 1.6437 in.)

Crank pin taper and out-of-round
Limit : 0.01 mm (0.0004 in.)
Out-of-round : A – B
Taper : a – b

Connecting rod bearing general information

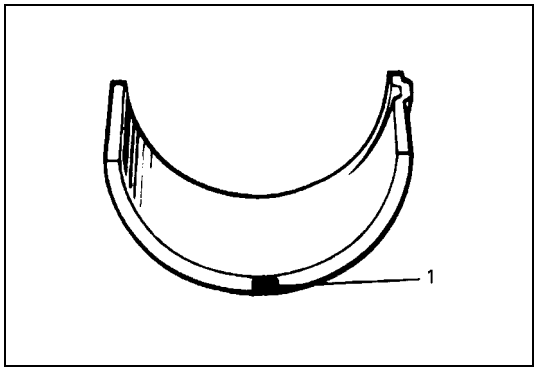

Service connecting rod bearings are available in standard size and 0.25 mm (0.0098 in.) undersize, and standard size bearing has 5 kinds of bearings differing in tolerance.
For identification of undersize bearing, it is painted red at the position as indicated in figure, undersize bearing thickness is 1.605 – 1.615 mm (0.0632 – 0.0635 in.) at the center of it.

1. Painting

Connecting rod bearing visual inspection

Inspect bearing shells for signs of fusion, pitting, burn or flaking and observe contact pattern. Bearing shells found in defective condition must be replaced.

Connecting rod bearing clearance

1) Before checking bearing clearance, clean bearing and crank pin.
2) Install bearing in connecting rod and bearing cap.
3) Place a piece of gaging plastic (1) to full width of crank pin as contacted by bearing (parallel to crankshaft), avoiding oil hole.

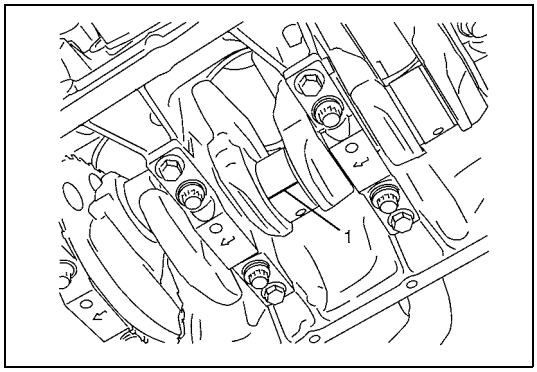

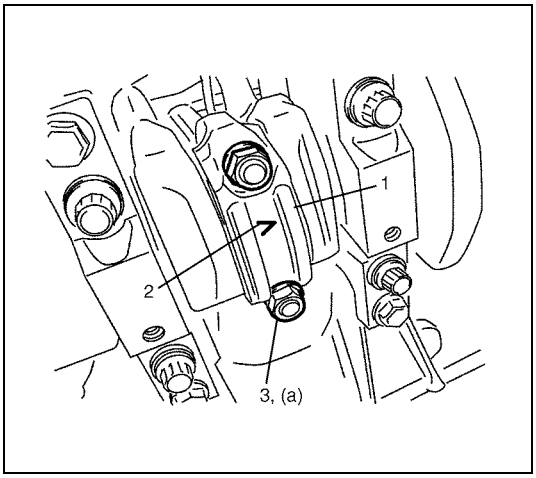

4) Install rod bearing cap (1) to connecting rod.
When installing cap, be sure to point arrow mark (2) on cap to crankshaft pulley side, as shown in figure. After applying engine oil to rod bolts and tighten cap nuts (3) gradually as follows.
a) Tighten all cap nuts to 15 N·m (1.5 kg-m, 11.0 lb-ft).
b) Retighten them to 45°.
c) Repeat step b) once again.

Tightening torque
Connecting rod bearing cap nuts
(a) : 15 N·m (1.5 kg-m, 11.0 lb-ft), and then retighten by turning through 45° twice

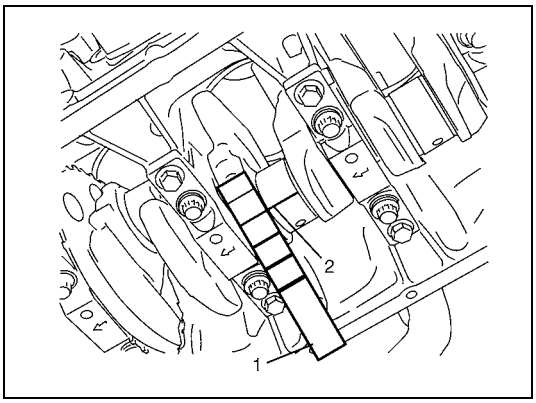

5) Remove cap and using a scale (1) on gaging plastic (2) envelope, measure gaging plastic width at the widest point (clearance).
If clearance exceed its limit, use a new standard size bearing referring to “Selection of connecting rod bearings” in this section.
After selecting new bearing, recheck clearance.

Connecting rod bearing clearance
Standard : 0.029 – 0.047 mm (0.0011 – 0.0018 in.)
Limit : 0.065 mm (0.0026 in.)

6) If clearance can not be brought to its limit even by using a new standard size bearing, regrind crank pin to undersize and use 0.25 mm undersize bearing.

NOTE:
After checking the rod bearing clearance, make sure that checking for Connecting rod bolt deformation.
Refer to “Connecting rod” of “Pistons, Piston Rings, Connecting Rods and Cylinders Inspection”.

Selection of connecting rod bearings

NOTE:
- **If bearing is in malcondition, or bearing clearance is out of specification, select a new standard bearing according to the following procedure and install it.**
- **When replacing crankshaft or connecting rod and its bearing due to any reason, select new standard bearings to be installed by referring to numbers stamped on connecting rod and its cap and/or alphabets stamped on crank web of No.3 cylinder.**

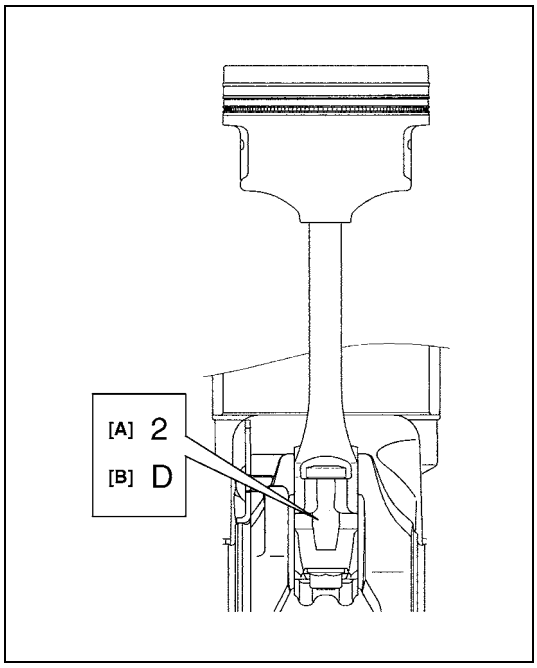

1) Check stamped numbers on connecting rod and its cap as shown.
   Three kinds of numbers ("1", "2" and "3") represent the following connecting rod big end inside diameters.
   For example, stamped number "1" indicates that corresponding connecting rod big end inside diameter is 45.000 – 45.006 mm (1.7717 – 1.7718 in.).

Connecting rod big end inside diameter

Stamped numbers	connecting rod big end inside diameter
1	45.0000 – 45.0060 mm (1.7717 – 1.7718 in.)
2	45.0061 – 45.0120 mm (1.7719 – 1.7721 in.)
3	45.0121 – 45.0180 mm (1.7722 – 1.7723 in.)

[A]: Weight indication mark
[B]: Connecting rod big end inside diameter number

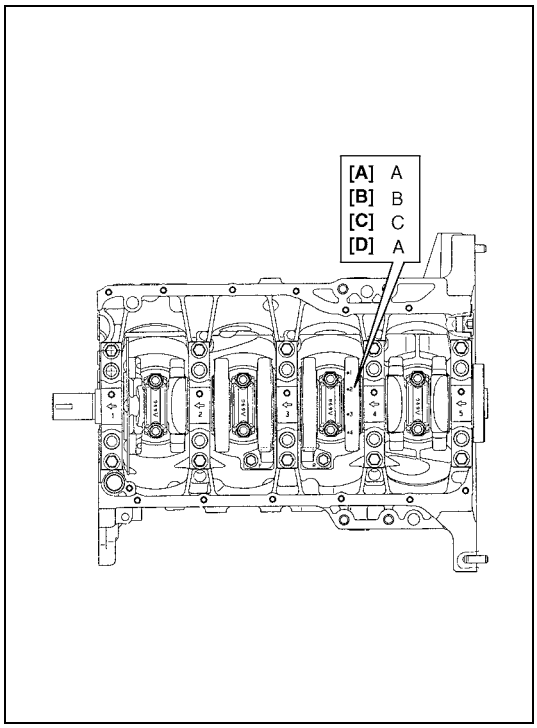

2) Next, check crankshaft pin diameter. On crank web No.3, four alphabets are stamped as shown in figure.
   Three kinds of alphabet ("A", "B" and "C") represent the following crankshaft pin diameter respectively.
   For example, stamped "A" indicates that corresponding crankshaft pin diameter is 41.994 – 42.000 mm (1.6533 – 1.6534 in.).

Crankshaft pin outer diameter

Stamped alphabet	Crankshaft pin diameter
A	41.9940 – 42.0000 mm (1.6533 – 1.6534 in.)
B	41.9880 – 41.9939 mm (1.6531 – 1.6532 in.)
C	41.9820 – 41.9879 mm (1.6529 – 1.6530 in.)

[A]: Crankshaft pin diameter for No.1 cylinder
[B]: Crankshaft pin diameter for No.2 cylinder
[C]: Crankshaft pin diameter for No.3 cylinder
[D]: Crankshaft pin diameter for No.4 cylinder

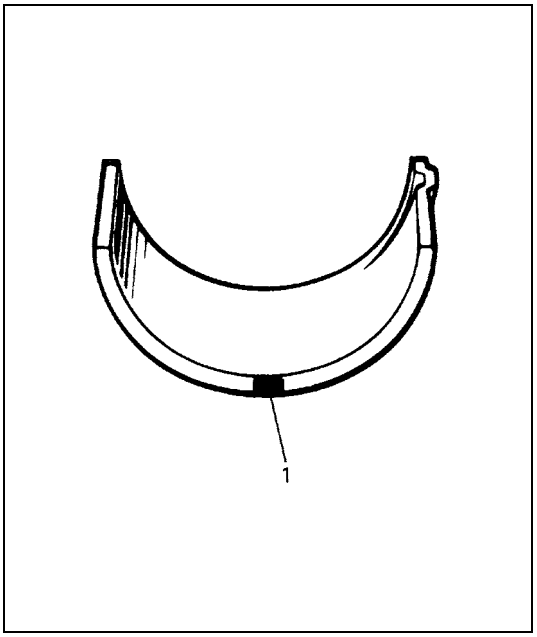

3) There are five kinds of standard bearings differing in thickness. To distinguish them, they are painted in the following colors at the position as indicated in figure.
Each color indicated the following thickness at the center of bearing.

Standard size of connecting rod bearing thickness

Color painted	Bearing thickness
Blue	1.4991 – 1.5020 mm (0.05902 – 0.05913 in.)
Yellow	1.4961 – 1.4990 mm (0.05890 – 0.05901 in.)
Nothing	1.4931 – 1.4960 mm (0.05878 – 0.05889 in.)
Black	1.4901 – 1.4930 mm (0.05867 – 0.05877 in.)
Green	1.4870 – 1.4900 mm (0.05855 – 0.05866 in.)

1. Paint

4) From number stamped on connecting rod and its cap and alphabets stamped on crank web No.3, determine new standard bearing to be installed to connecting rod big end inside, by referring to table.
For example, if number stamped on connecting rod and its cap is “1” and alphabet stamped on crank web No.3 is “B”, install a new standard bearing painted in “Black” to its connecting rod big end inside.

Specification of new standard connecting rod bearing size

		Number stamped on connecting rod and its cap (connecting rod big end inside diameter)		
		1	2	3
Alphabet stamped on crank web No.3 (Crankshaft pin diameter)	A	Green	Black	Nothing
	B	Black	Nothing	Yellow
	C	Nothing	Yellow	Blue
		New standard bearing to be installed.		

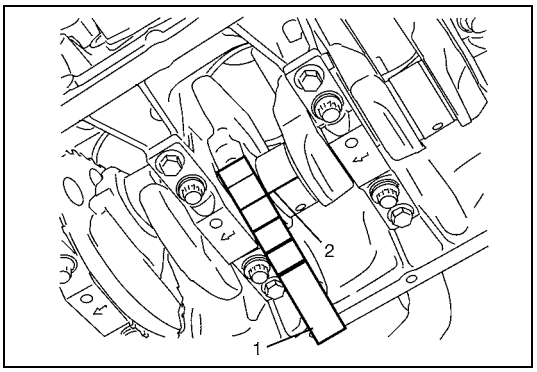

5) Using scale (1) on gaging plastic (2), check bearing clearance with newly selected standard bearing.
If clearance still exceeds its limit, use next thicker bearing and recheck clearance.

Main Bearings, Crankshaft and Cylinder Block Components

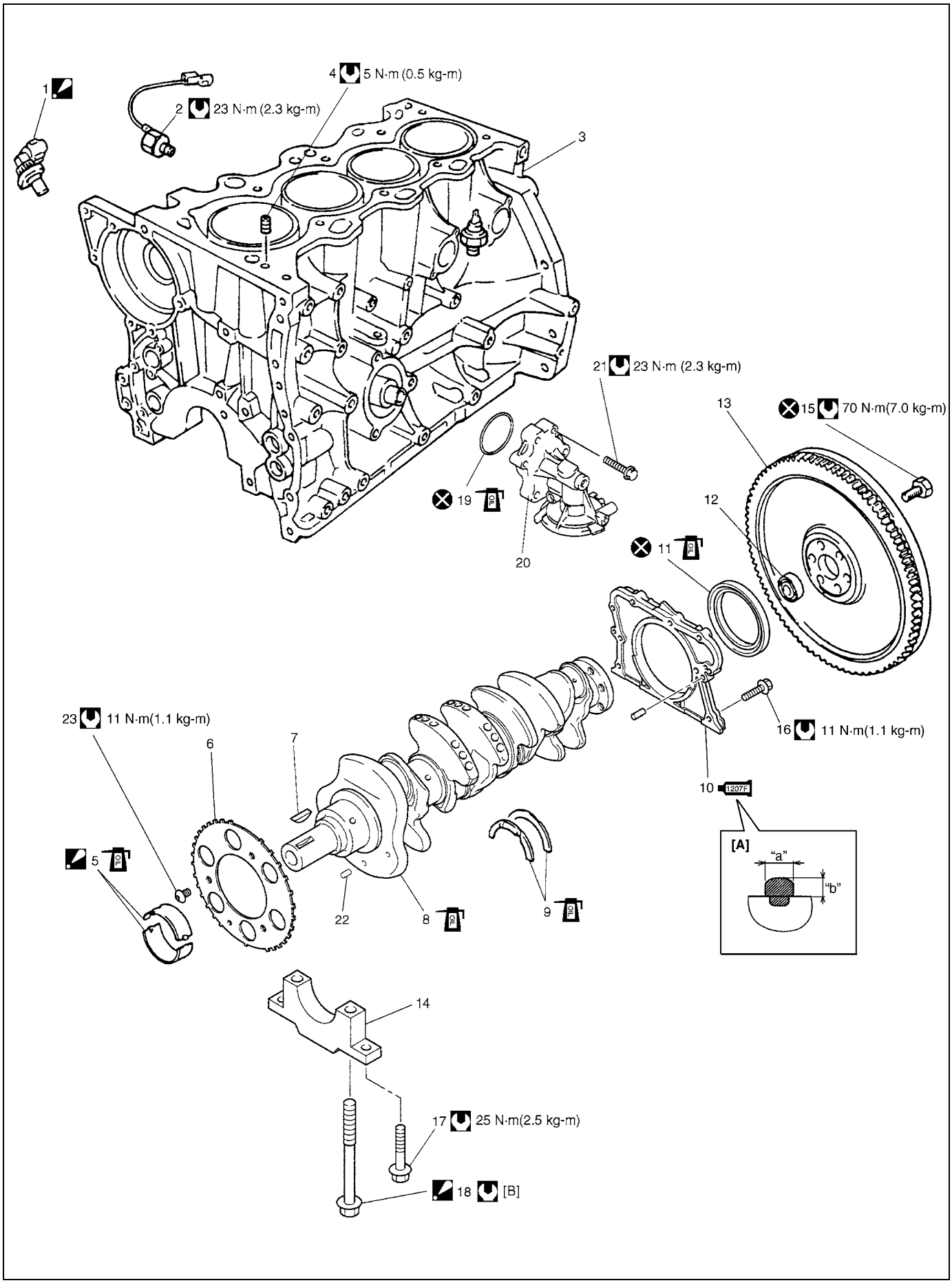

[A] : Sealant application amount	4. Venturi plug	14. Main bearing cap
[B] : 1) Tighten all bolts to 30 N·m (3.0 kg-m) 2) Tighten all bolts to 50 N·m (5.0 kg-m) 3) Then retighten all bolts by turning through 60°	5. Main bearing : Upper half of bearing has an oil groove	15. Flywheel mounting bolt
Tightening torque	6. Sensor plate	16. Rear oil seal housing mounting bolt
Do not reuse.	7. Crankshaft timing sprocket key	17. Main bearing cap No.2 bolt
Apply engine oil to inside / sliding surface.	8. Crankshaft	18. Main bearing cap No.1 bolt : Never reuse main bearing cap No.1 bolts once disassembled it due to plastic deformation tightening. Be sure to use new main bearing cap No.1 bolts when installing.
"a" : 3 mm (0.12 in.)	9. Thrust bearing	19. O-ring
"b" : 2 mm (0.08 in.)	10. Rear oil seal housing : Apply sealant 99000-31250 to mating surface.	20. Oil filter adapter case
1. CKP sensor (if equipped) : When installing CKP sensor, use new sensor mounting bolt.	11. Rear oil seal	21. Oil filter adapter bolt
2. Knock sensor	12. Input shaft bearing	22. Spring pin
3. Cylinder block	13. Flywheel	23. Sensor plate bolt

Main Bearings, Crankshaft and Cylinder Block Removal and Installation

Removal

1) Remove engine assembly from vehicle referring to "Engine Assembly Removal and Installation" in this section.

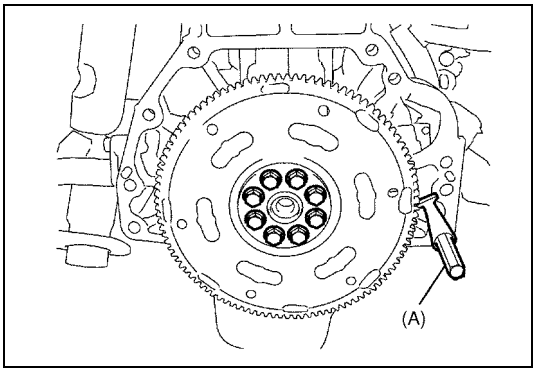

2) Remove clutch cover, clutch disc and flywheel (drive plate for A/T) by using special tool.

Special tool
(A) : 09924-17810

3) Remove piston and connecting rod referring to "Pistons, Piston Rings, Connecting Rods and Cylinders Removal and Installation" in this section.

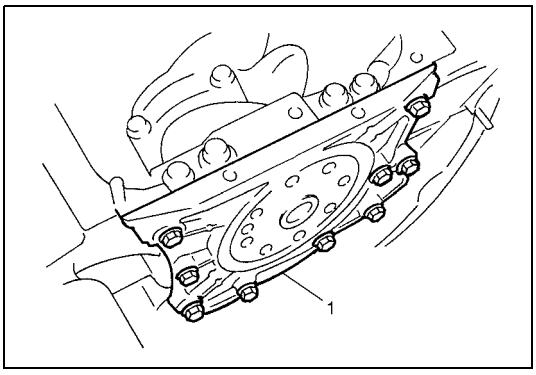

4) Remove rear oil seal housing (1).

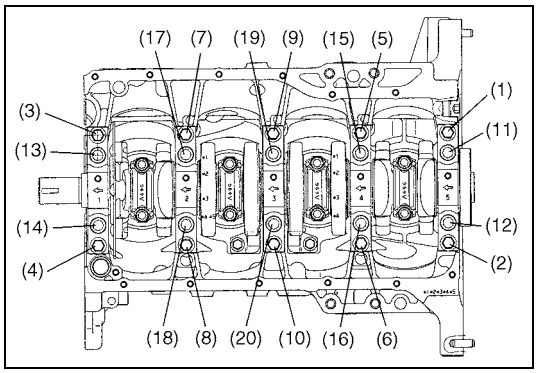

5) Loosen main bearing cap No.1 and No.2 bolts in such order as indicated in figure and remove them.
6) Remove crankshaft from cylinder block.

Installation

CAUTION:

- **Use new bearing cap No.1 bolts. They are deformed once they are used because they are plastic deformation tightening bolts.**
- **All parts to be installed must be perfectly clean.**
- **Be sure to oil crankshaft journals, journal bearings, thrust bearings, crankpins, connecting rod bearings, pistons, piston rings and cylinder bores.**
- **Journal bearings, bearings caps, connecting rods, rod bearings, rod bearing caps, pistons and piston rings are in combination sets. Do not disturb such combination and make sure that each part goes back to where it came from, when installing.**

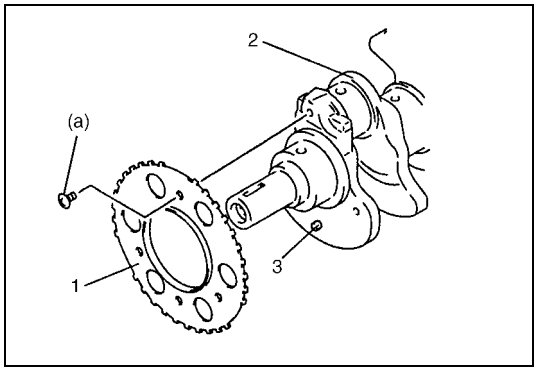

1) Install sensor plate (1) to crankshaft (2) and tighten bolts to specified torque.

NOTE:

When installing sensor plate, align spring pin (3) on crankshaft and hole of sensor plate.

Tightening torque
Sensor plate bolts (a) : 11 N·m (1.1 kg-m, 8.0 lb-ft)

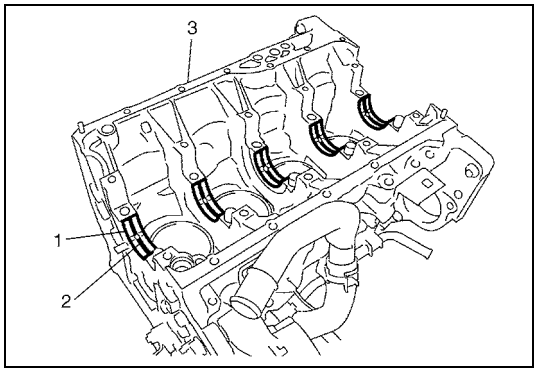

2) Install main bearings to cylinder block.
Upper half of bearing (1) has an oil groove (2).
Install it to cylinder block (3), and the other half without oil groove to bearing cap.
Make sure that two halves are painted in the same color.

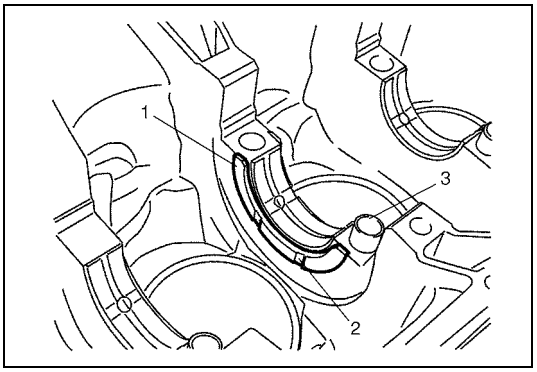

3) Install thrust bearings (1) to cylinder block between No.2 and No.3 cylinders. Face oil groove (2) sides to crank webs.
4) Confirm that dowel pins (3) are installed to intake side of each journal.
5) Install crankshaft to cylinder block.

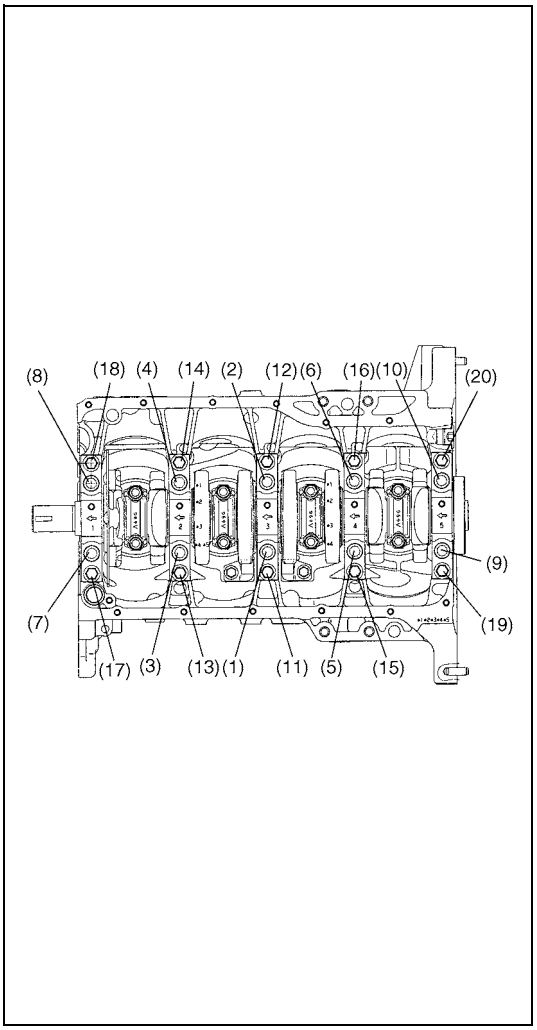

6) Install bearing cap to cylinder block, making sure to point arrow mark (on each cap) to crankshaft pulley side. Fit them sequentially in ascending order, 1, 2, 3, 4 and 5, starting from pulley side.
   After applying engine oil to main bearing cap No.1 bolts ((1) – (10)) and main bearing cap No.2 bolts ((11) – (20)), tighten them gradually as follows.
   a) Tighten bolts (1) – (10) to 30 N·m (3.0 kg-m, 22.0 lb-ft) according to numerical order as shown by using a 12 corner socket wrenches.
   b) In the same manner as in Step a), tighten them to 50 N·m (5.0 kg-m, 36.5 lb-ft).
   c) In the same manner as in Step a), retighten them to 60°.
   d) Tighten bolts (11) – (20) to 25 N·m (2.5 kg-m, 18.0 lb-ft) according to numerical order as shown.

Tightening torque
Main bearing No.1 bolts (1) – (10)
: 30 N·m (3.0 kg-m, 22.0 lb-ft), 50 N·m (5.0 kg-m, 36.5 lb-ft) and then retighten by turning through 60°
Main bearing No.2 bolts (11) – (20)
: 25 N·m (2.5 kg-m, 18.0 lb-ft)

CAUTION:
After tightening cap bolts, check to be sure that crankshaft rotates smoothly when turning it by 12 N·m (1.2 kg-m, 9.0 lb-ft) torque or below.

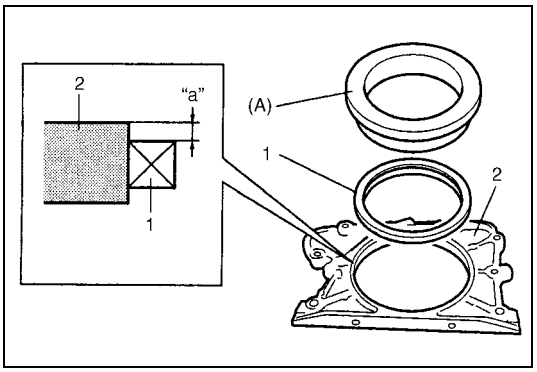

7) If necessary, press-fit rear oil seal (1) to oil seal housing (2) by using special tool as shown in the figure.

Special tool
(A) : 09911-97820

Crank rear oil seal installing position (dimension)
"a" : 3 mm (0.12 in.)

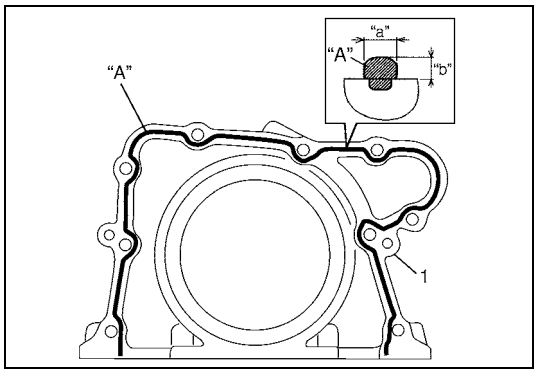

8) Apply sealant to mating surface of rear oil seal housing (1).

"A" : Sealant 99000-31250

Sealant amount for rear oil seal housing
Width "a" : 3 mm, 0.12 in.
Height "b" : 2 mm, 0.08 in.

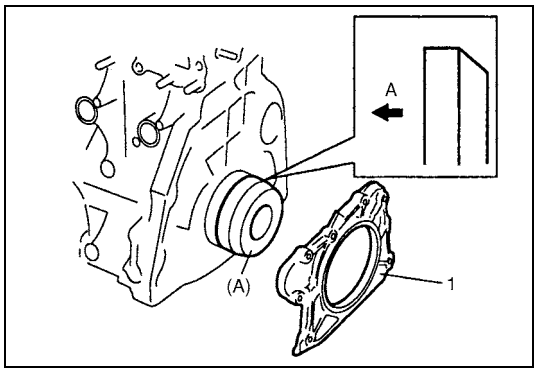

9) Install rear oil seal housing (1) and tighten bolts to specified torque by using special tool.

Special tool
(A) : 09911-97720

Tightening torque
Rear oil seal housing bolts : 11 N·m (1.1 kg-m, 8.0 lb-ft)

A : Crankshaft side

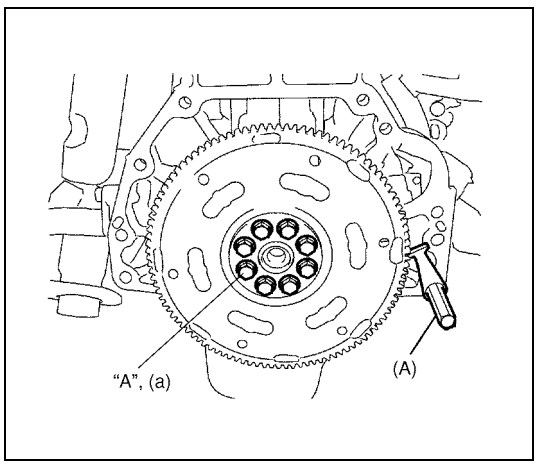

10) Install flywheel ((for M/T) or drive plate (for A/T)).
Using special tool, lock flywheel or drive plate, and tighten flywheel or drive plate bolts to specified torque.

NOTE:

Use new flywheel or drive plate bolts.

Special tool
(A) : 09924-17810

Tightening torque
Flywheel or drive plate bolts
(a) : 70 N·m (7.0 kg-m, 51.0 lb-ft)

11) Install piston and connecting rod referring to "Pistons, Piston Rings, Connecting Rods and Cylinders Removal and Installation" in this section.
12) Install engine assembly to vehicle referring to "Engine Assembly Removal and Installation" in this section.

Main Bearings, Crankshaft and Cylinder Block Inspection

Main bearing cap No.1 bolt

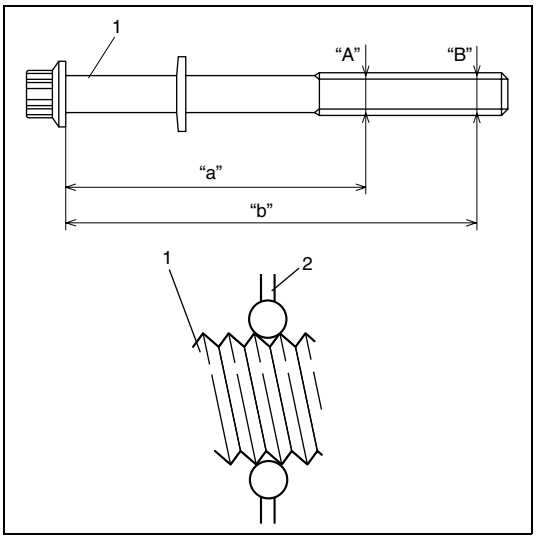

Measure each thread diameter main bearing cap No.1 bolts (1) at "A" on 60mm(2.36in.) from seat side of flange bolt and "B" on 90mm(3.54in.) from seat side of flange bolt by using a micrometer (2).
Calculate difference in diameters ("A" – "B").
If it exceeds limit, replace with new one.

Main bearing cap No.1 bolt diameter measurement points
"a" : 60mm (2.36in.)
"b" : 90mm (3.54in.)

Main bearing cap No.1 bolt diameter difference
Limit ("A" – "B") : 0.2mm (0.008in.)

Crankshaft

Crankshaft runout

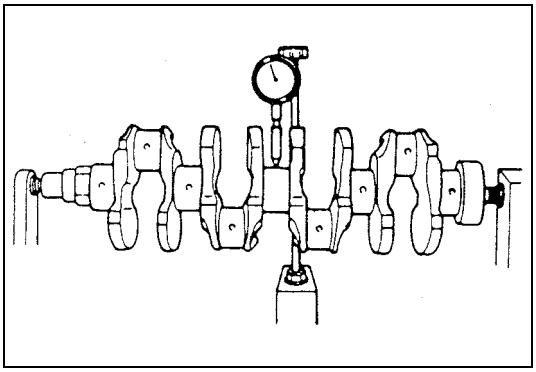

Using a dial gauge, measure runout at center journal. Rotate crankshaft slowly. If runout exceeds its limit, replace crankshaft.

Crankshaft runout
Limit : 0.02 mm (0.0008 in.)

Crankshaft thrust play

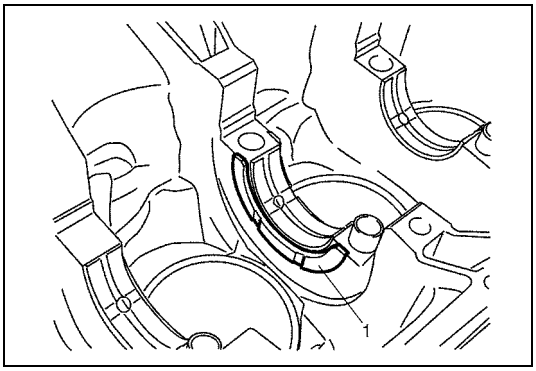

1) Measure this play with crankshaft set in cylinder block in the normal manner, that is with thrust bearing (1) and journal bearing caps installed.

Thickness of crankshaft thrust bearing
Standard : 2.500 mm (0.0984 in.)
Oversize (0.125 mm (0.0049 in.)) : 2.563 mm (0.1009 in.)

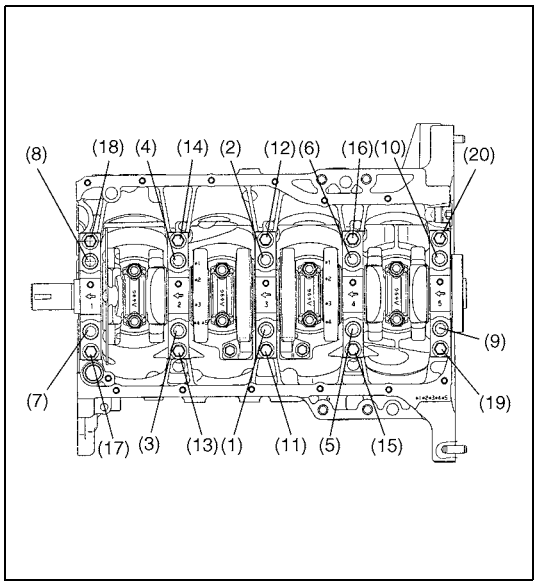

2) Tighten main bearing cap No.1 bolts (1) – (10) and main bearing cap No.2 bolts (11) – (20) gradually as follows.
   a) Tighten bolts (1) – (10) to 30 N·m (3.0 kg-m, 22.0 lb-ft) according to numerical order in figure.
   b) In the same manner as in Step 1), tighten them to 50 N·m (5.0 kg-m, 36.5 lb-ft).
   c) In the same manner as in step 1), retighten them to 60°.
   d) Tighten bolts (11) – (20) to 25 N·m (2.5 kg-m, 18.0 lb-ft) according to numerical order in figure.

Tightening torque
Main bearing cap No.1 bolts (1) – (10) :
30 N·m (3.0 kg-m, 21.5 lb-ft), 50 N·m (5.0 kg-m, 36.5 lb-ft) and then retighten by turning through 60 °
Main bearing cap No.2 bolts (11) – (20) :
25 N·m (2.5 kg-m, 18.0 lb-ft)

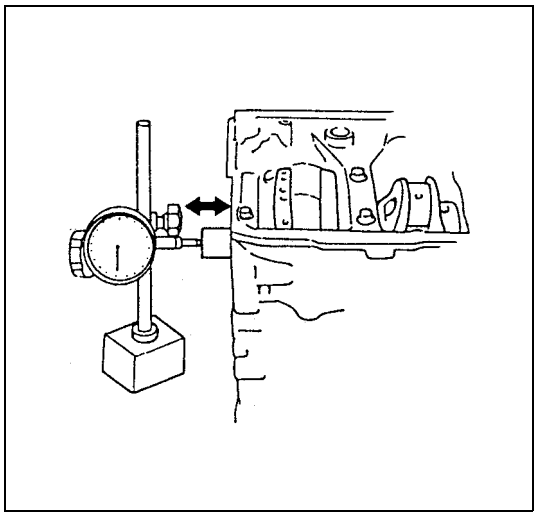

3) Use a dial gauge to read displacement in axial (thrust) direction of crankshaft.
   If its limit is exceeded, replace thrust bearing with new standard one or oversize one to obtain standard thrust play.

Crankshaft thrust play
Standard : 0.11 – 0.31 mm (0.0043 – 0.0122 in.)
Limit : 0.35 mm (0.0138 in.)

NOTE:

After checking the thrust play, make sure that thread deformation of each main bearing cap No.1 bolt referring to "Main bearing cap No.1 bolt" in this section.

Out-of-round and taper (uneven wear) of journals

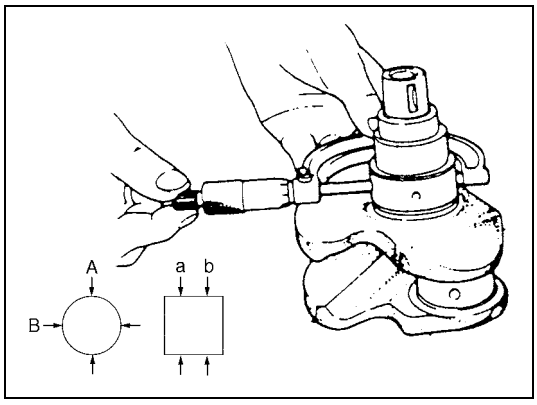

An unevenly worn crankshaft journal shows up as a difference in diameter at a cross section or along its length (or both). This difference, if any, is determined by taking micrometer readings. If any one of journals is badly damaged or if amount of uneven wear in the sense explained below exceeds its limit, regrind or replace crankshaft.

Crankshaft out-of-round and taper
Limit : 0.01 mm (0.0004 in.)
Out-of-round : A – B
Taper : a – b

Main bearings

General information

- Service main bearings are available in standard size and 0.25 mm (0.0098 in.) undersize, and each of them has 5 kinds of bearings differing in tolerance.

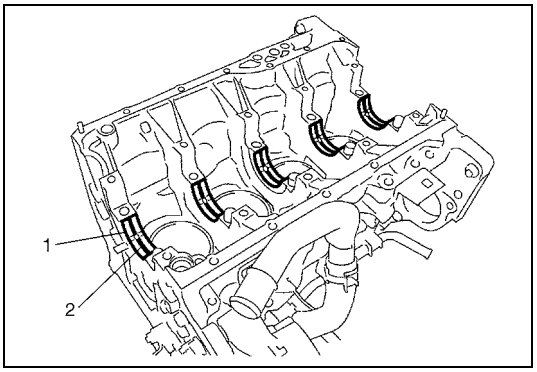

- Upper half of bearing (1) has an oil groove (2) as shown in figure.
  Install this half with oil groove to cylinder block.
- Lower half of bearing does not have an oil groove.

Visual inspection

Check bearings for pitting, scratches, wear or damage.
If any malcondition is found, replace both upper and lower halves.
Never replace either half without replacing the other half.

Main bearing clearance

CAUTION:
Do not rotate crankshaft while gaging plastic is installed.

Check clearance by using gaging plastic according to the following procedure.

1) Remove bearing caps.
2) Clean bearings and main journals.

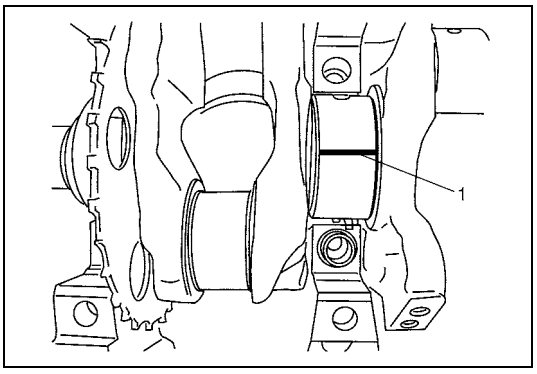

3) Place a piece of gaging plastic (1) the full width of bearing (parallel to crankshaft) on journal, avoiding oil hole.

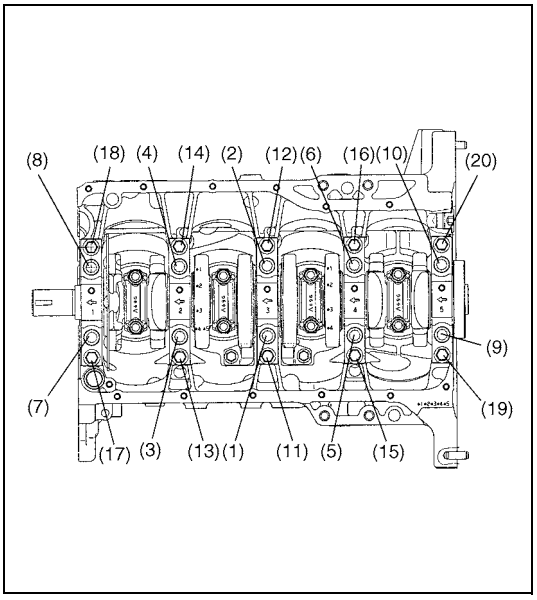

4) Tighten main bearing cap No.1 bolts (1) – (10) and main bearing No.2 cap bolts (11) – (20) gradually as follows.
   a) Tighten bolts (1) – (10) to 30 N·m (3.0 kg-m, 22.0 lb-ft) according to numerical order in figure.
   b) In the same manner as in Step a), tighten them to 50 N·m (5.0 kg-m, 36.5 lb-ft).
   c) In the same manner as in step a), retighten them to 60°.
   d) Tighten bolts (11) – (20) to 25 N·m (2.5 kg-m, 18.0 lb-ft) according to numerical order in figure.

Tightening torque
Main bearing cap No.1 bolts (1) – (10) :
30 N·m (3.0 kg-m, 22.0 lb-ft), 50 N·m (5.0 kg-m, 36.5 lb-ft) and then retighten by turning through 60°
Main bearing cap No.2 bolts (11) – (20) :
25 N·m (2.5 kg-m, 18.0 lb-ft)

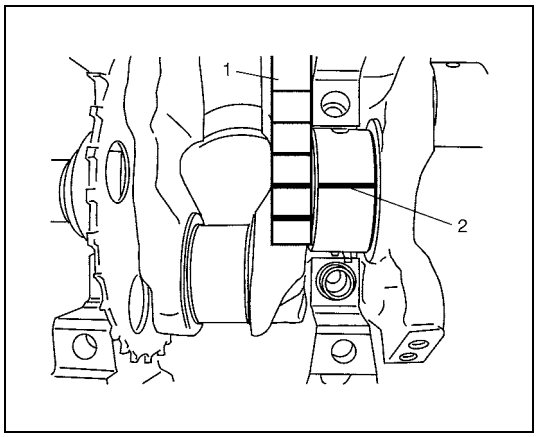

5) Remove bearing caps and using scale (1) on gaging plastic (2) envelop, measure gaging plastic width at its widest point. If clearance exceeds its limit, replace bearing. Always replace both upper and lower inserts as a unit.
   A new standard bearing may produce proper clearance. If not, it will be necessary to regrind crankshaft journal for use of 0.25 mm (0.0098 in.) undersize bearing.
   After selecting new bearing, recheck clearance.

Main bearing clearance
Standard : 0.025 – 0.045 mm (0.0010 – 0.0018 in.)
Limit : 0.058 mm (0.0023 in.)

Selection of main bearings

Standard bearing

If bearing is in malcondition, or bearing clearance is out of specification, select a new standard bearing according to the following procedure and install it.

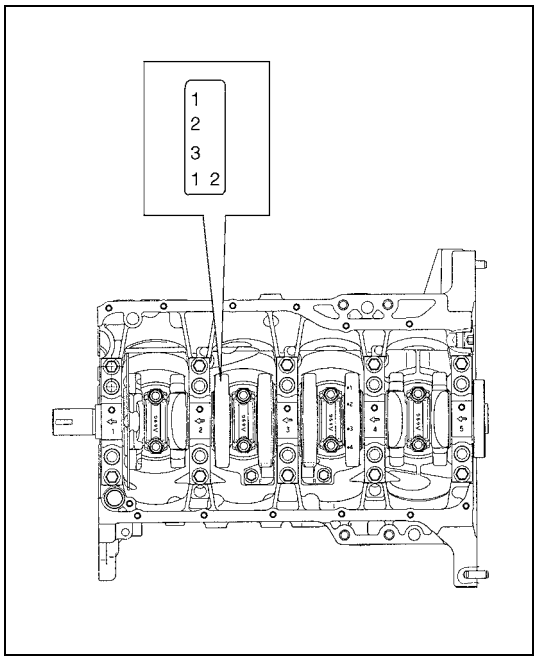

1) First check journal diameter. As shown in figure, crank web No.2 has stamped numbers.
   Three kinds of numbers (“1”, “2” and “3”) represent the following journal diameters.
   Stamped numbers on crank web No.2 represent journal diameters marked with an arrow in figure respectively.
   For example, stamped number “1” indicates that corresponding journal diameter is 44.994 – 45.000 mm (1.7714 – 1.7717 in.).

Crankshaft journal diameter

Stamped numbers	Journal diameter
1	44.994 – 45.000 mm (1.7714 – 1.7717 in.)
2	44.988 – 44.994 mm (1.7712 – 1.7714 in.)
3	44.982 – 44.988 mm (1.7709 – 1.7712 in.)

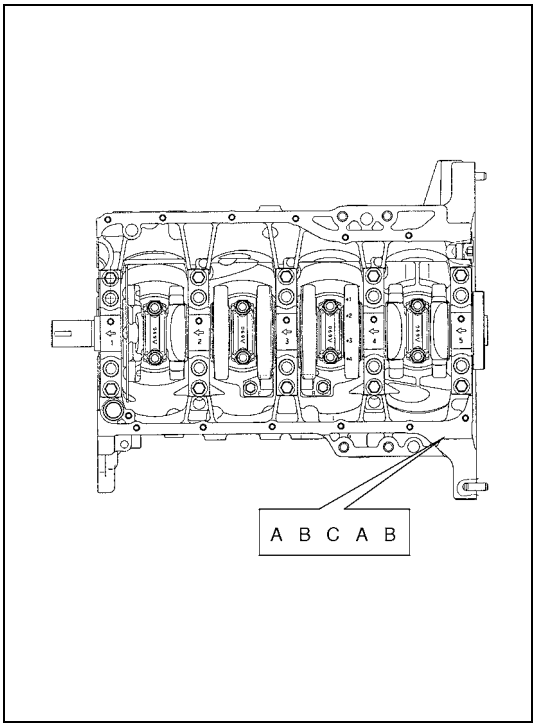

2) Next, check bearing cap bore diameter without bearing. On mating surface of cylinder block, five alphabets are stamped as shown in figure.
Three kinds of alphabets (“A”, “B” and “C”) or numbers (“1”, “2” and “3”) represent the following cap bore diameters.
Stamped alphabets or numbers on cylinder block represent bearing cap bore diameter marked with an arrow in figure respectively. For example, stamped “A” or “1” indicates that corresponding bearing cap bore diameter is 49.000 – 49.006 mm (1.9291 – 1.9294 in.).

Crankshaft bearing cap bore

Stamped alphabet (number)	Bearing cap bore diameter (without bearing)
A (1)	49.000 – 49.006 mm (1.9291 – 1.9294 in.)
B (2)	49.006 – 49.012 mm (1.9294 – 1.9296 in.)
C (3)	49.012 – 49.018 mm (1.9296 – 1.9298 in.)

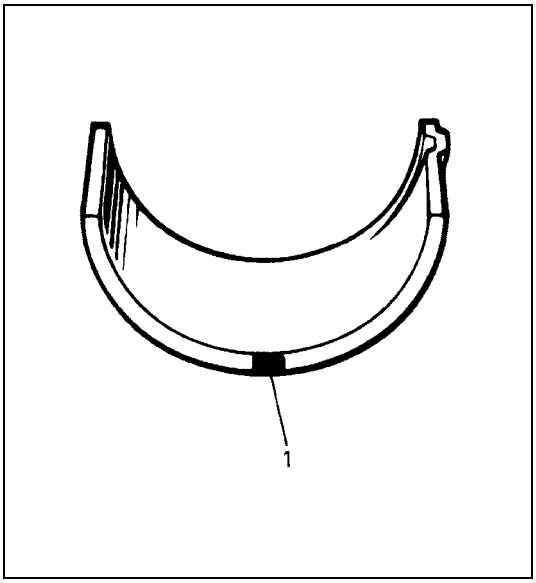

3) There are five kinds of standard bearings differing in thickness. To distinguish them, they are painted in the following colors at the position as indicated in figure.
Each color indicated the following thickness at the center of bearing.

Standard size of crankshaft main bearing thickness

Color painted	Bearing thickness
Pink	1.990 – 1.994 mm (0.0783 – 0.0785 in.)
Purple	1.993 – 1.997 mm (0.0785 – 0.0786 in.)
Brown	1.996 – 2.000 mm (0.0786 – 0.0787 in.)
Green	1.999 – 2.003 mm (0.0787 – 0.0789 in.)
Black	2.002 – 2.006 mm (0.0788 – 0.0790 in.)

1. Paint

4) From number stamped on crank web No.2 and alphabets stamped on cylinder block, determine new standard bearing to be installed to journal, by referring to table shown below.
For example, if number stamped on crank web No.2 is “1” and alphabet stamped on cylinder block is “B”, install a new standard bearing painted in “Purple” to its journal.

Specification of new standard crankshaft main bearing size

		Number stamped on crank web No.2 (Journal diameter)		
		1	2	3
Alphabet stamped on cylinder block (Cap bore dia.)	A (1)	Pink	Purple	Brown
	B (2)	Purple	Brown	Green
	C (3)	Brown	Green	Black
		New standard bearing to be installed.		

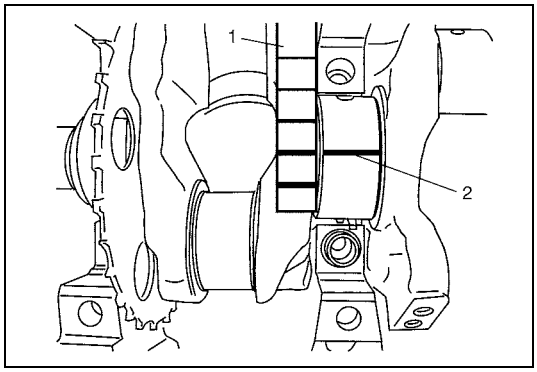

5) Using scale (1) on gaging plastic (2), check bearing clearance with newly selected standard bearing.
   If clearance still exceeds its limit, use next thicker bearing and recheck clearance.
6) When replacing crankshaft or cylinder block due to any reason, select new standard bearings to be installed by referring to number stamped on new crankshaft or alphabets stamped on new cylinder block.

Undersize bearing (0.25 mm (0.0098 in.))

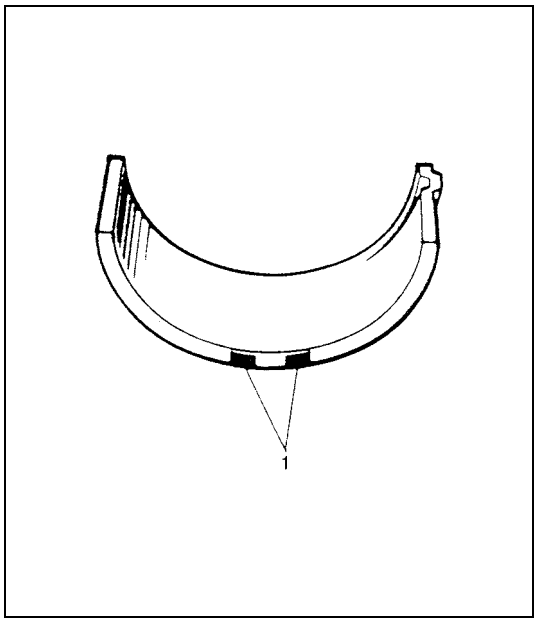

- 0.25 mm (0.0098 in.) undersize bearing is available, in five kinds varying in thickness.
  To distinguish them, each bearing is painted in the following colors at such position as indicated in figure.
  Each color represents the following thickness at the center of bearing.

Undersize of crankshaft main bearing thickness

Color painted	Bearing thickness
Red and Pink	2.115 – 2.119 mm (0.0833 – 0.0834 in.)
Red and Purple	2.118 – 2.122 mm (0.0834 – 0.0835 in.)
Red and Brown	2.121 – 2.125 mm (0.0835 – 0.0837 in.)
Red and Green	2.124 – 2.128 mm (0.0836 – 0.0838 in.)
Red and Black	2.127 – 2.131 mm (0.0837 – 0.0839 in.)

1. Paint

- If necessary, regrind crankshaft journal and select undersize bearing to use with it as follows.

1) Regrind journal to the following finished diameter.

Finished diameter
44.732 – 44.750 mm (1.7611 – 1.7618 in.)

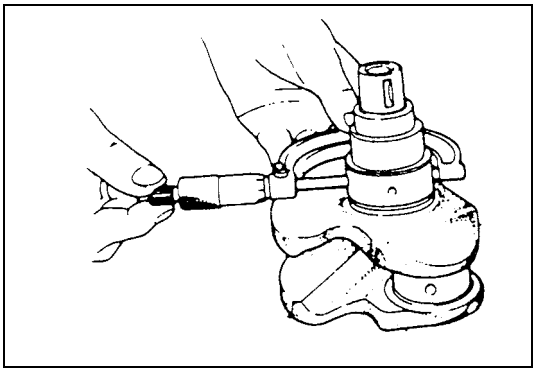

2) Using micrometer, measure reground journal diameter.
   Measurement should be taken in two directions perpendicular to each other in order to check for out-of-round.
3) Using journal diameter measured above and alphabets stamped on cylinder block, select an undersize bearing by referring to table given below.
   Check bearing clearance with newly selected undersize bearing.

Specification of new standard undersize crankshaft main bearing

		Measured journal diameter		
		44.744 – 44.750 mm (1.7616 – 1.7618 in.)	44.738 – 44.744 mm (1.7613 – 1.7616 in.)	44.732 – 44.738 mm (1.7611 – 1.7613 in.)
Alphabets stamped on cylinder block	A (1)	Red and Pink	Red and Purple	Red and Brown
	B (2)	Red and Purple	Red and Brown	Red and Green
	C (3)	Red and Brown	Red and Green	Red and Black
		Undersize bearing to be installed		

Rear oil seal

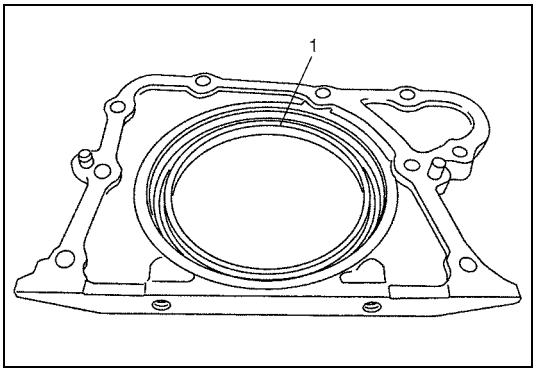

Carefully inspect oil seal (1) for wear or damage.
If its lip is worn or damaged, replace it.

Flywheel

Visual inspection

- If ring gear is damaged, cracked or worn, replace flywheel.
- If the surface contacting clutch disc is damaged, or excessively worn, replace flywheel.

Flywheel face runout

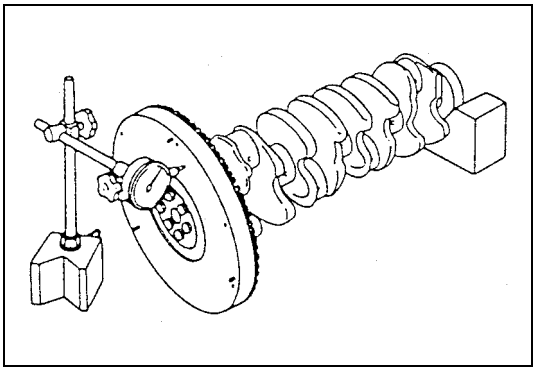

Check flywheel face runout with a dial gauge.
If runout exceeds its limit, replace flywheel.

Flywheel face runout
Limit : 0.2 mm (0.0079 in.)

Sensor plate

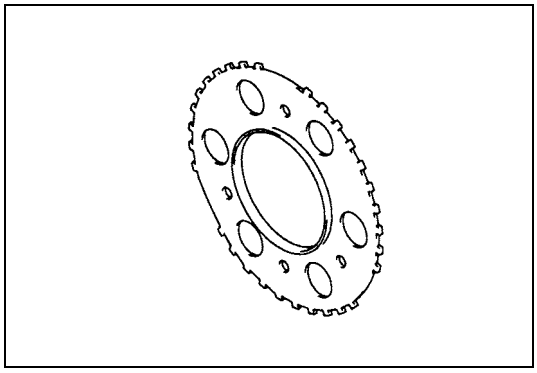

Check sensor plate for crack or damage. If malcondition is found, replace it.

Cylinder block

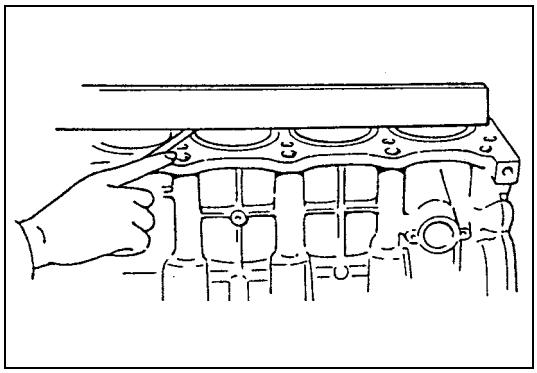

Distortion of gasketed surface

Using straightedge and thickness gauge, check gasketed surface for distortion and, if flatness exceeds its limit, correct it.

Cylinder block flatness
Limit : 0.03 mm (0.0012 in.)

Honing or reboring cylinders

1) When any cylinder needs reboring, all other cylinders must also be rebored at the same time.
2) Select oversized piston according to amount of cylinder wear.

Oversize piston diameter

Size	Piston diameter
Oversize 0.50	78.453 – 78.468 mm (3.0887 – 3.0893 in.)

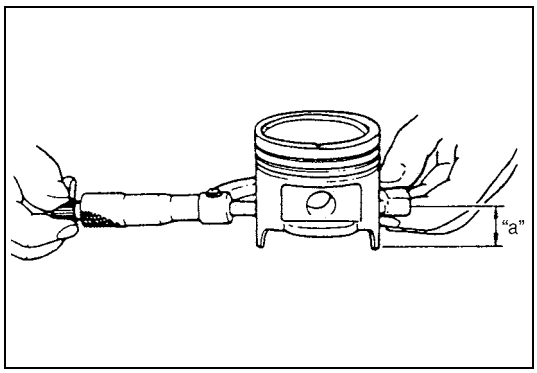

3) Using micrometer, measure piston diameter.

Measurement position for piston diameter
"a" : 19.5 mm (0.77 in.)

4) Rebore and hone cylinder to the following dimension.

Cylinder bore diameter to be rebored
Oversize 0.50 : 78.500 – 78.514 mm (3.0906 – 3.0911 in.)

NOTE:

Before reboring, install all main bearing caps in place and tighten to specification to avoid distortion of bearing bores.

5) Measure piston clearance after honing.

Piston clearance : 0.032 – 0.061 mm (0.0013 – 0.0024 in.)

Required Service Material

Material	Recommended product (Part Number)	Use
Sealant	Sealant 1207F (99000-31250)	• To apply to mating surfaces of cylinder block and oil pan. • To apply to mating surfaces of cylinder block and timing chain cover. • To apply to sealing surfaces of cylinder head cover. • To apply to mating surfaces to rear oil seal housing.
	Sealant 1207B (99000-31140)	• To apply to mating surface of cylinder block, cylinder head and timing chain cover.
	Sealant 1215 (99000-31110)	• To apply to the thread of the bolt of water outlet pipe.

Tightening Torque Specification

Fastening part	Tightening torque		
	N•m	kg-m	lb-ft
Oil pressure switch	14	1.4	10.5
Camshaft housing bolts (for replacement of shim)	8	0.8	6.0
Camshaft housing bolts	11	1.1	8.0
Engine cover bolts	8	0.8	6.0
Intake manifold bolts and nuts	25	2.5	18.0
Exhaust manifold bolts and nuts	50	5.0	36.5
Exhaust pipe No.1 bolts	50	5.0	36.5
Exhaust manifold stiffener bolts	50	5.0	36.5
Exhaust pipe No.2 bolts	43	4.3	31.5
Exhaust oxygen sensor	45	4.5	32.5
Oil pump strainer bolt	11	1.1	8.0
Oil pump strainer bracket bolt	11	1.1	8.0
Oil pan bolts and nuts	11	1.1	8.0
Oil pan drain plug bolt	50	5.0	36.5
Timing chain cover bolts	23	2.3	17.0
Crank shaft pulley bolt	150	15.0	108.5
Oil pump rotor plate bolts	11	1.1	8.0
Timing chain No.1 guide bolts	9	0.9	6.5
Timing chain tensioner adjuster bolts	11	1.1	8.0
Venturi plug	5	0.5	3.5
Cylinder head bolt for M8	25	2.5	18.0

Fastening part	Tightening torque		
	N•m	kg-m	lb-ft
Cylinder head bolts for M10	a) Tighten 20 N·m b) Tighten 40 N·m c) Retighten by turning through 60° d) Retighten by turning through 60°	a) Tighten 2.0 kg-m b) Tighten 4.0 kg-m c) Retighten by turning through 60° d) Retighten by turning through 60°	a) Tighten 14.5 lb-ft b) Tighten 29.0 lb-ft c) Retighten by turning through 60° d) Retighten by turning through 60°
Connecting rod bearing cap nuts	a) Tighten 15 N·m b) Retighten by turning through 45° c) Retighten by turning through 45°	a) Tighten 1.5 kg-m b) Retighten by turning through 45° c) Retighten by turning through 45°	a) Tighten 11.0 lb-ft b) Retighten by turning through 45° c) Retighten by turning through 45°
Engine mounting bolts for M8	25	2.5	18.0
Engine mounting bolts and nuts for M10	55	5.5	40.0
Engine right mounting nuts	65	6.5	47.0
Main bearing cap No.1 bolts	a) Tighten 30 N·m b) Tighten 50 N·m c) Retighten by turning through 60°	a) Tighten 3.0 kg-m b) Tighten 5.0 kg-m c) Retighten by turning through 60°	a) Tighten 22.0 lb-ft b) Tighten 36.5 lb-ft c) Retighten by turning through 60°
Main bearing cap No.2 bolts	25	2.5	18.0
Sensor plate bolts	11	1.1	8.0
Rear oil seal housing bolts	11	1.1	8.0
Flywheel or drive plate bolts	70	7.0	51.0
Transaxle stiffener bolts	50	5.0	36.5
Timing chain tensioner bolt	25	2.5	18.0
Oil gallery pipe No.1 bolts	30	3.0	21.5
Oil gallery pipe No.2 bolts	11	1.1	8.0
Oil gallery pipe No.3 bolts	11	1.1	8.0
Oil control valve mounting nuts	11	1.1	8.0
Intake camshaft sprocket bolt	60	6.0	43.0

Special Tool

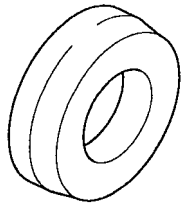 09911-97720 Oil seal guide	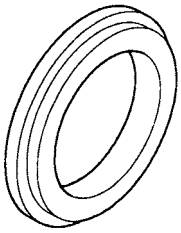 09911-97820 Oil seal installer	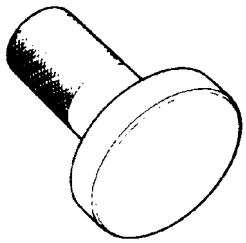 09913-75810 Bearing installer	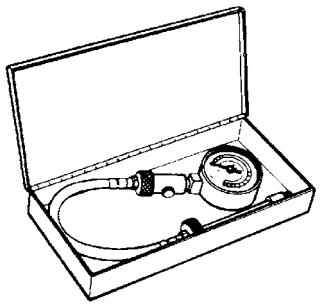 09915-64512 Compression gauge
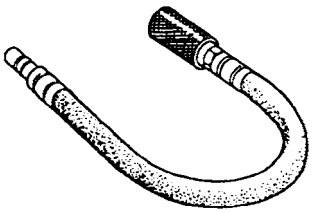 09915-64530 Hose	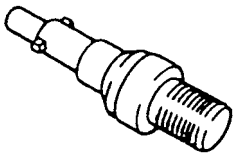 09915-67010 Attachment	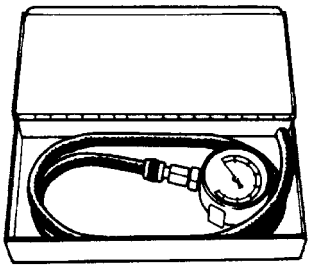 09915-67311 Vacuum gauge	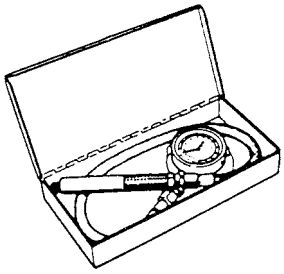 09915-77310 Oil pressure gauge
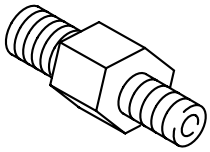 09915-78211 Oil pressure gauge attachment	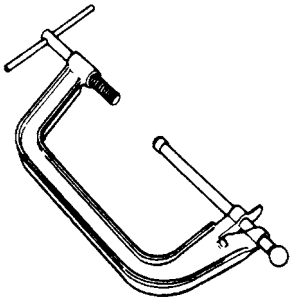 09916-14510 Valve lifer	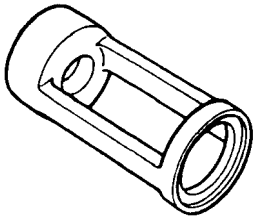 09916-14521 Valve lifer attachment	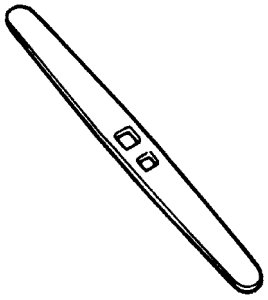 09916-34542 Reamer handle
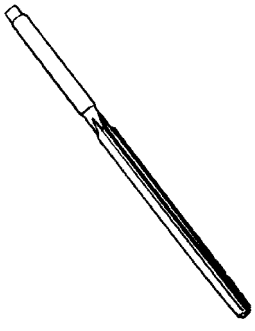 09916-34550 Reamer (5.5 mm)	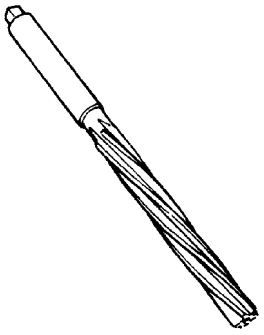 09916-37320 Reamer (10.5 mm)	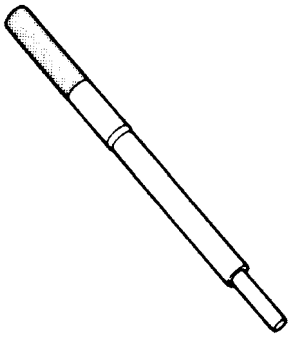 09916-44910 Valve guide remover	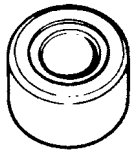 09916-56011 Valve guide installer

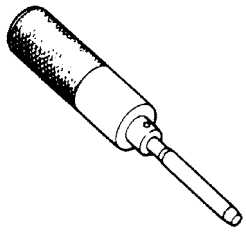 09916-58210 Valve guide installer handle	[A] 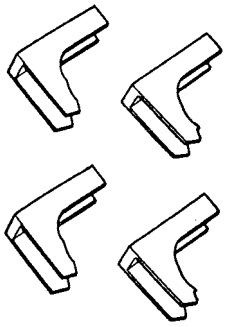 09916-67020 Tappet holder See NOTE below	[B] 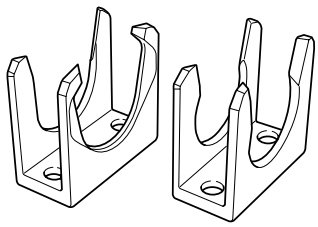 09916-67021 Tappet holder	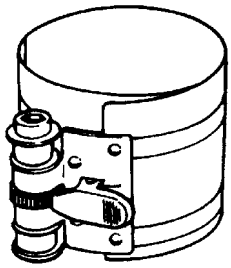 09916-77310 Piston ring compressor
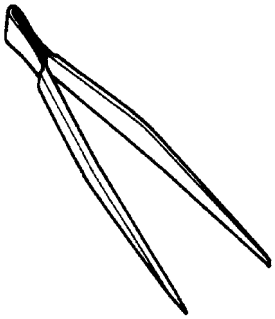 09916-84511 Forceps	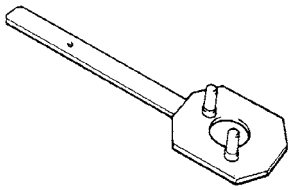 09917-68221 Camshaft lock holder	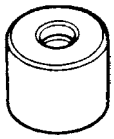 09917-98221 Valve stem seal installer	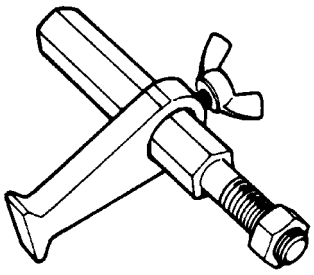 09924-17810 Flywheel holder
 09926-58010 Bearing puller attachment	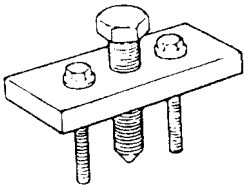 09944-36011 Steering wheel remover		

NOTE:

[A] and [B] tools in the above table are interchangeable.

SECTION 6B

ENGINE COOLING

CONTENTS

General Description 6B-2
Cooling System Circulation 6B-2
Coolant 6B-3
Diagnosis 6B-4
Diagnosis Table 6B-4
System Circuit Inspection 6B-4
Maintenance 6B-5
Coolant Level Check 6B-5
Engine Cooling System Inspection and Service 6B-6
Cooling System Flush and Refill 6B-6
Water Pump/Generator Drive Belt Tension Inspection and Adjustment 6B-8
On-Vehicle Service 6B-9
Cooling System Components 6B-9
Cooling System Draining 6B-10
Cooling System Refill 6B-10
Cooling Water Pipes or Hoses 6B-10
Thermostat Removal and Installation 6B-11
Thermostat Inspection 6B-11
Radiator Removal and Installation 6B-12
Radiator Inspection 6B-13
Radiator Cleaning 6B-13
Radiator Cooling Fan Relay Inspection 6B-13
Radiator Cooling Fan Removal and Installation 6B-13
Radiator Cooling Fan Inspection 6B-14
Water Pump/Generator Drive Belt Removal and Installation 6B-14
Water Pump Removal and Installation 6B-15
Water Pump Inspection 6B-16
Engine Coolant Temperature Sensor (ECT Sensor) Removal and Installation 6B-16
Engine Coolant Temperature Sensor (ECT Sensor) Inspection 6B-16
Required Service Material 6B-17
Tightening Torque Specification 6B-17

General Description

The cooling system consists of the radiator cap, radiator, coolant reservoir, hoses, water pump, cooling fan and thermostat. The radiator is tube-and-fin type one.

Cooling System Circulation

1) While the engine is warmed up (thermostat closed), coolant circulates as follows.

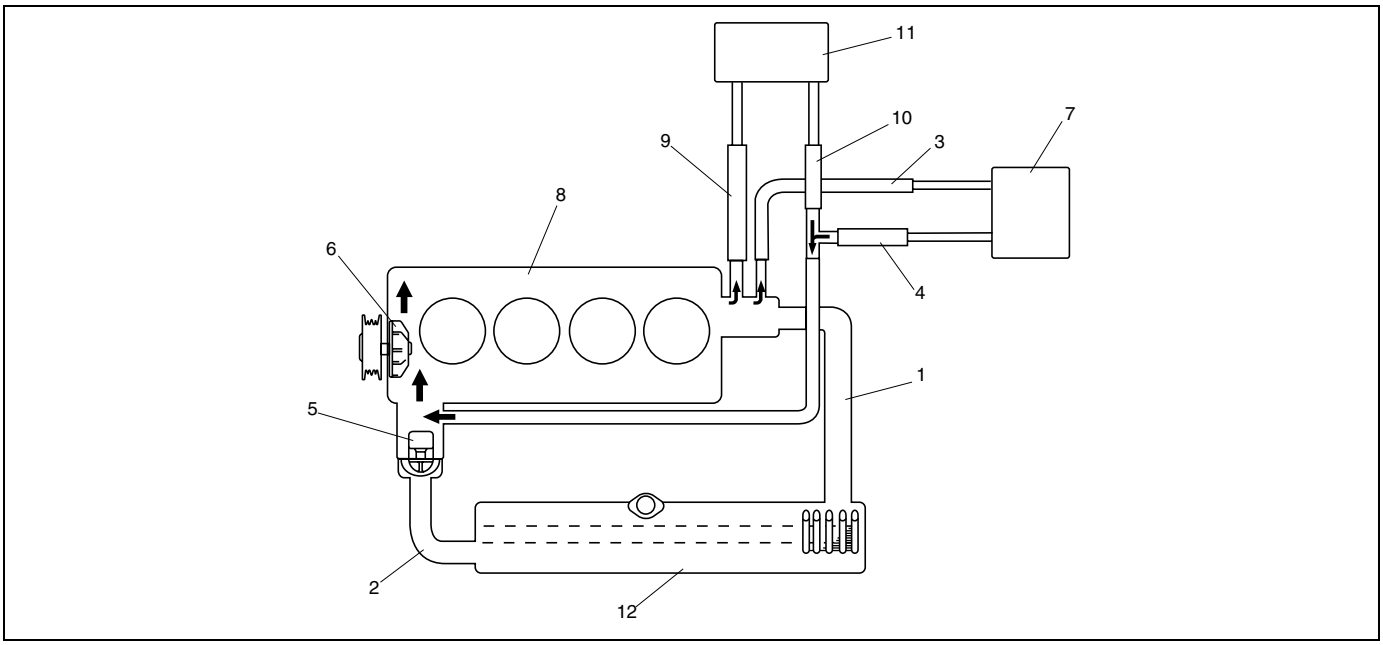

1. Radiator inlet hose	5. Thermostat	9. Heater core inlet hose
2. Radiator outlet hose	6. Water pump	10. Heater core outlet hose
3. Throttle body inlet hose	7. Throttle body	11. Heater core
4. Throttle body outlet hose	8. Engine	12. Radiator

2) When coolant is warmed up to normal temperature and the thermostat opens, coolant passes through the radiator core to be cooled as follows.

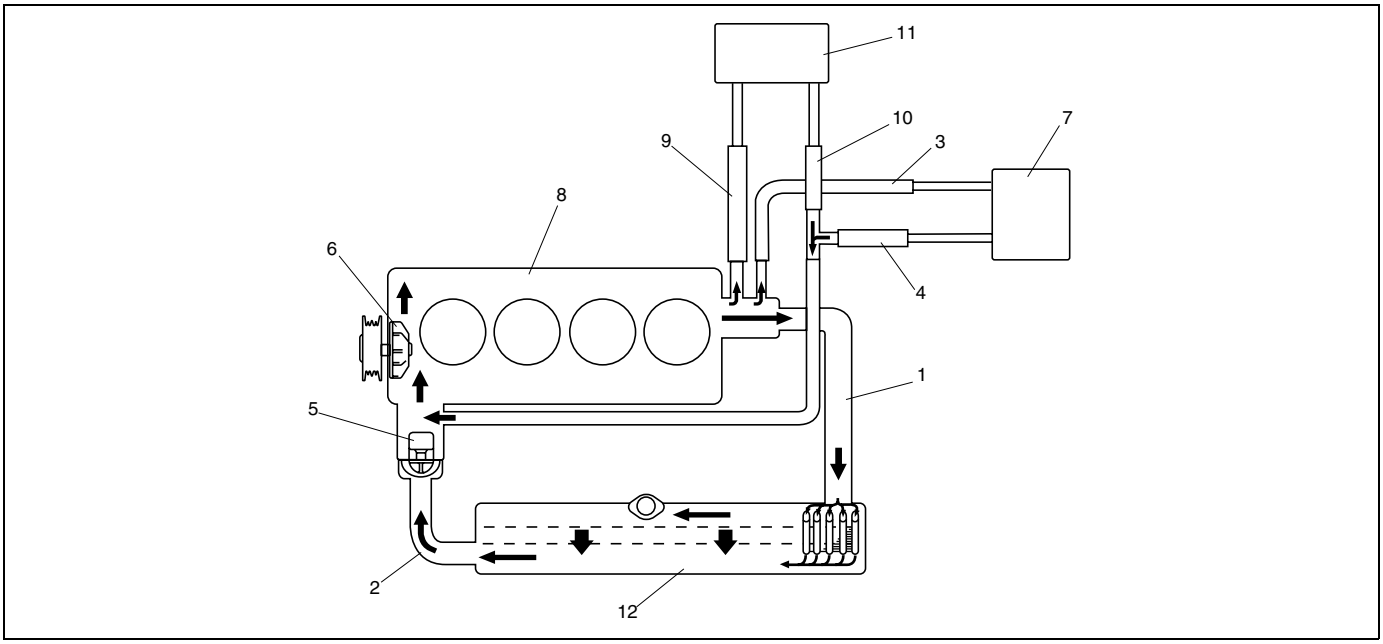

1. Radiator inlet hose	5. Thermostat	9. Heater core inlet hose
2. Radiator outlet hose	6. Water pump	10. Heater core outlet hose
3. Throttle body inlet hose	7. Throttle body	11. Heater core
4. Throttle body outlet hose	8. Engine	12. Radiator

Coolant

The coolant recovery system is standard. The coolant in the radiator expands with heat, and the coolant is overflowed to the reservoir.
When the system cools down, the coolant is drawn back into the radiator.

The cooling system has been filled with a quality coolant that is a 50/50 mixture of water and ethylene glycol antifreeze.

This 50/50 mixture coolant solution provides freezing protection to –36°C (–33°F).

- Maintain cooling system freeze protection at –36°C (–33°F) to ensure protection against corrosion and loss of coolant from boiling. This should be done even if freezing temperatures are not expected.
- Add ethylene glycol base coolant when coolant has to be added because of coolant loss or to provide added protection against freezing at temperature lower than –36°C (–33°F).

NOTE:

- **Alcohol or methanol base coolant or plain water alone should not be used in cooling system at any time as damage to cooling system could occur.**
- **Coolant must be mixed with demineraled water or distilled water.**

Anti-freeze proportioning table

		For M/T model	For A/T model
Freezing temperature	°C	–36	–36
	°F	–33	–33
Anti-freeze/Anti-corrosion coolant concentration	%	50	50
Ratio of compound to cooling water	ltr.	2.80/2.80	2.70/2.70
	US pt.	5.92/5.92	5.71/5.71
	Imp pt.	4.93/4.93	4.75/4.75

Coolant capacity

	For M/T model	For A/T model
Engine radiator and heater	5.0 liters (10.00/8.80 US/Imp. pt.)	4.8 liters (10.14/8.45 US/Imp. pt.)
Reservoir	0.6 liters (1.27/1.06 US/Imp. pt.)	0.6 liters (1.27/1.06 US/Imp. pt.)
Total	5.6 liters (11.84/9.86 US/Imp. pt.)	5.4 liters (11.41/9.51 US/Imp. pt.)

Diagnosis

Diagnosis Table

Condition	Possible Cause	Correction
Engine overheats (It is in case that radiator fan operates)	Loose or broken water pump belt	Adjust or replace.
	Not enough coolant	Check coolant level and add as necessary.
	Faulty thermostat	Replace.
	Faulty water pump	Replace.
	Dirty or bent radiator fins	Clean or remedy.
	Coolant leakage on cooling system	Repair.
	Clogged radiator	Check and replace radiator as necessary.
	Faulty radiator cap	Replace.
	Improper ignition timing	Adjust.
	Dragging brakes	Adjust brake.
	Slipping clutch	Adjust or replace.
	Poor charge battery	Check and replace as necessary.
	Poor generation generator	Check and repair.
	ECT sensor faulty	Check and replace as necessary.
	Radiator cooling fan relay faulty	Check and replace as necessary.
	ECM faulty	Check and replace as necessary.
	Wiring or grounding faulty	Repair and necessary.
	Equipped with too much electric load part(s)	Dismount.
	Radiator cooling fan motor faulty	Check and replace as necessary.
Engine overheats (It is in case that radiator fan won't operates)	Fuse blown	Check 30A fuse of relay/fuse box and check for short circuit to ground.
	Radiator cooling fan relay	Check and replace as necessary.
	ECT sensor faulty	Check and replace as necessary.
	Radiator cooling fan motor faulty	Check and replace as necessary.
	Wiring or grounding faulty	Repair as necessary
	ECM faulty	Check and replace as necessary.

System Circuit Inspection

Refer to “Table B-7 Radiator Fan Control System Check” in Section 6

Maintenance

WARNING:

- **Do not remove radiator cap to check engine coolant level; check coolant visually at the see-through coolant reservoir.**
  Coolant should be added only to reservoir as necessary.
- **As long as there is pressure in the cooling system, the temperature can be considerably higher than the boiling temperature of the solution in the radiator without causing the solution to boil. Removal of the radiator cap while engine is hot and pressure is high will cause the solution to boil instantaneously and possibly with explosive force, spewing the solution over engine, fenders and person removing cap. If the solution contains flammable anti-freeze such as alcohol (not recommended for use at any time), there is also the possibility of causing a serious fire.**

Coolant Level Check

WARNING:

To help avoid danger of being burned, do not remove radiator cap while engine and radiator are still hot.
Scalding fluid and steam can be blown out under pressure radiator cap is taken off too soon.

To check level, lift hood and look at “see-through” coolant reservoir.
It is not necessary to remove radiator cap to check coolant level.

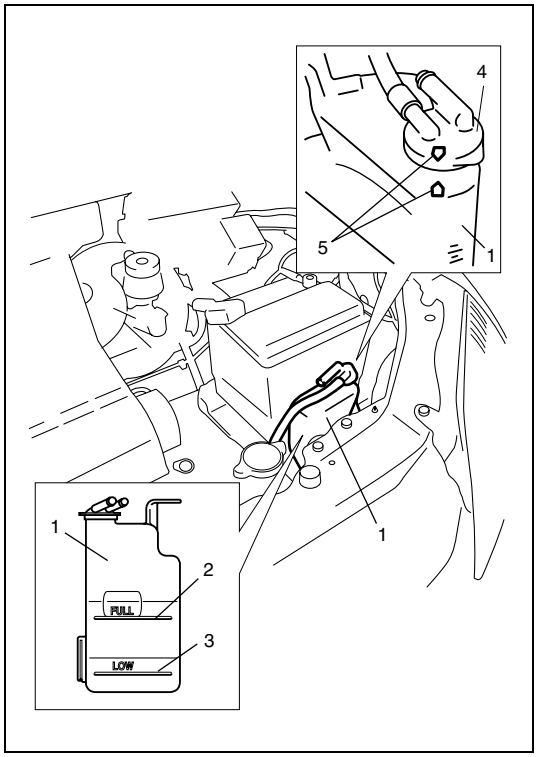

When engine is cool, check coolant level in reservoir (1).
A normal coolant level should be between “FULL” mark (2) and “LOW” mark (3) on reservoir (1).
If coolant level is below “LOW” mark (3), remove reservoir cap (4) and add proper coolant to reservoir to bring coolant level up to “FULL” mark (2). Then, reinstall cap (4) and align match marks (5) on reservoir and cap (4).

NOTE:

- **If proper quality antifreeze is used, there is no need to add extra inhibitors or additives that claim to improve system.**
  They may be harmful to proper operation of system, and are unnecessary expense.
- **When installing reservoir cap, align arrow marks (5) on reservoir and cap.**

Engine Cooling System Inspection and Service

WARNING:
To help avoid danger of being burned, do not remove radiator cap while engine and radiator are still hot. Scalding fluid and steam can be blown out under pressure if cap is taken off too soon.

1) Check cooling system for leakage or damage.
2) Wash radiator cap and filler neck with clean water by removing radiator cap when engine is cold.
3) Check coolant for proper level and freeze protection.

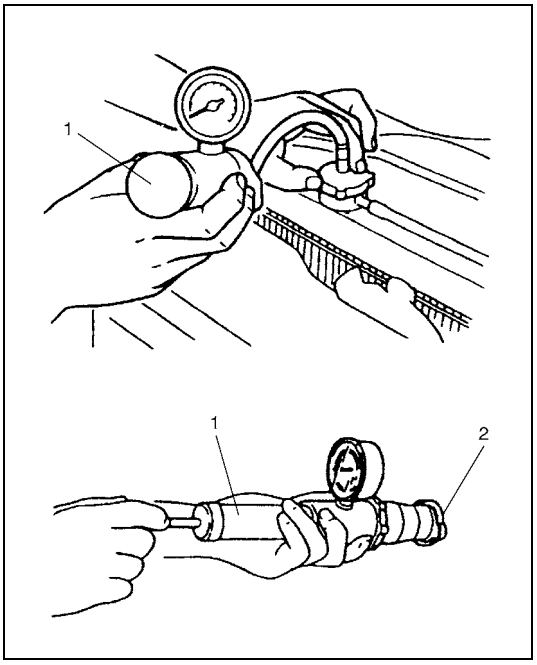

4) Using a pressure tester (1), check system and radiator cap (2) for proper pressure holding capacity.
   If replacement of cap is required, use a proper cap for this vehicle.

   Cooling system and radiator cap holding pressure (for inspection)
   : 110 kPa (1.1 kg/cm^2, 15.6 psi)

   NOTE:
   After installing radiator cap to radiator, make sure that the ear of cap lines is parallel to radiator.

5) Tighten hose clamps and inspect all hoses. Replace hoses whenever cracked, swollen or otherwise deteriorated.
6) Clean frontal area of radiator core.

Cooling System Flush and Refill

WARNING:
To help avoid danger of being burned, do not remove radiator cap while engine and radiator are still hot. Scalding fluid and steam can be blown out under pressure if cap is taken off too soon.

NOTE:
For detail of coolant specification, refer to "Coolant" in this section.

1) Remove radiator cap when engine is cool as follows.
   a) Turn cap counterclockwise slowly until it reaches a "stop". (Do not press down while turning it).
   b) Wait until pressure is relieved (indicated by a hissing sound) then press down on cap and continue to turn it counterclockwise.

2) With radiator cap removed, run engine until upper radiator hose is hot (this shows that thermostat is open and coolant is flowing through system).

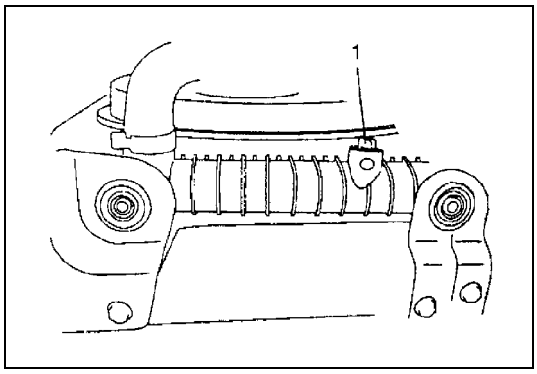

3) Stop engine and drain coolant from radiator drain plug (1).
4) Close radiator drain plug (1). Add water until system is filled and run engine until upper radiator hose is hot again.
5) Repeat Steps 3) and 4) several times until drained liquid is nearly colorless.
6) Close radiator drain plug (1) tightly.

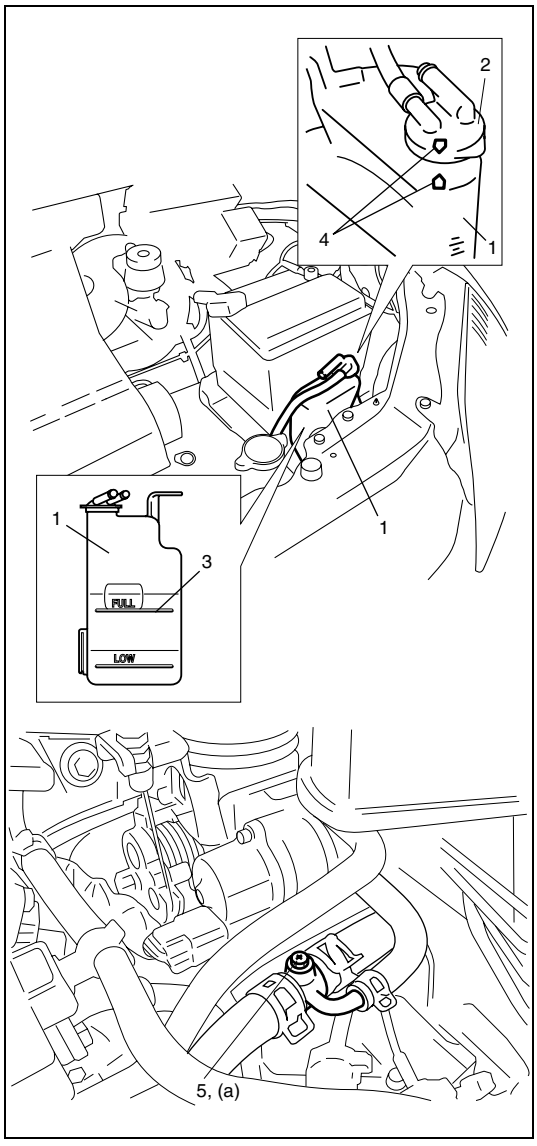

7) Remove reservoir (1), and remove cap (2) from reservoir (1).
8) Pour out any fluid, scrub and clean inside of reservoir with soap and water.
   Flush it well with clean water and drain. Reinstall reservoir.
9) Fill reservoir with coolant up to “Full” level mark (3).
10) Install reservoir cap (2) and align match marks (4) on reservoir and its cap.
11) Loosen air ventilation bolt (5) one and a half turns.
12) Fill radiator with coolant up to spilling coolant from air ventilation bolt (5).
13) Tighten air ventilation bolt (5) to specified torque.

Tightening torque
Air ventilation bolt (a) : 4.5 N·m (0.45 kg-m, 3.5 lb-ft)

14) Fill radiator with coolant up to bottom of radiator filler neck and install radiator cap, making sure that the ear of cap lines is parallel to radiator.
15) Run engine at idle speed.
16) Loosen air ventilation bolt (5) one and a half turns.
17) Run engine at 2000-3000 rpm, and tighten air ventilation bolt (5) to specified torque after spilling coolant from air ventilation bolt (5).

Tightening torque
Air ventilation bolt (a) : 4.5 N·m (0.45 kg-m, 3.5 lb-ft)

18) Run engine until radiator fan motor is operated.
19) Stop engine and wait until engine comes cooled down to help avoid danger of being burned.
20) Add coolant to radiator up to bottom of radiator filler neck, and install radiator cap, making sure that the ear of cap lines is parallel to radiator.
21) Repeat step 15) through 20).
22) Confirm that reservoir coolant level is “Full” level mark (3). If coolant is insufficient, repeat step 9) and 10).

Water Pump/Generator Drive Belt Tension Inspection and Adjustment

WARNING:

- **Disconnect negative cable at battery before checking and adjusting belt tension.**
- **To help avoid danger of being burned, do not remove radiator cap while engine and radiator are still hot. Scalding fluid and steam can be blown out under pressure if cap is taken off too soon.**

1) Inspect belt for cracks, cuts, deformation, wear and cleanliness. If it is necessary to replace belt, refer to "Water Pump/ Generator Drive Belt Removal and Installation" in this section.

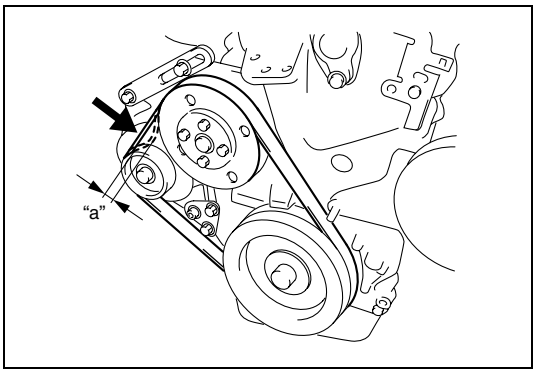

2) Check belt for tension. Belt is in proper tension when it deflects the following specification under thumb pressure (about 10 kg or 22 lb.).

Water pump / generator drive belt tension "a"
4.5 – 5.5 mm (0.18 – 0.22 in.) as deflection/10 kg (22 lbs)

NOTE:

When replacing belt with a new one, adjust belt tension to 3 – 4 mm (0.12 – 0.16 in.).

3) If belt is too tight or too loose, adjust it to proper tension by displacing generator position.

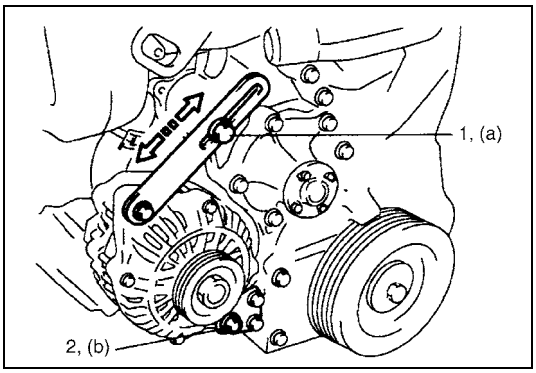

4) Tighten generator adjusting bolt (1) and pivot bolts (2) as specified torque.

Tightening torque
Generator adjusting bolt (a) : 23 N·m (2.3 kg-m, 17.0 lb-ft)
Generator pivot bolt (b) : 50 N·m (5.0 kg-m, 36.0 lb-ft)

5) Connect negative cable at battery.

On-Vehicle Service

WARNING:

- **Check to make sure that engine coolant temperature is cold before removing any part of cooling system.**
- **Also be sure to disconnect negative cord from battery terminal before removing any part.**

Cooling System Components

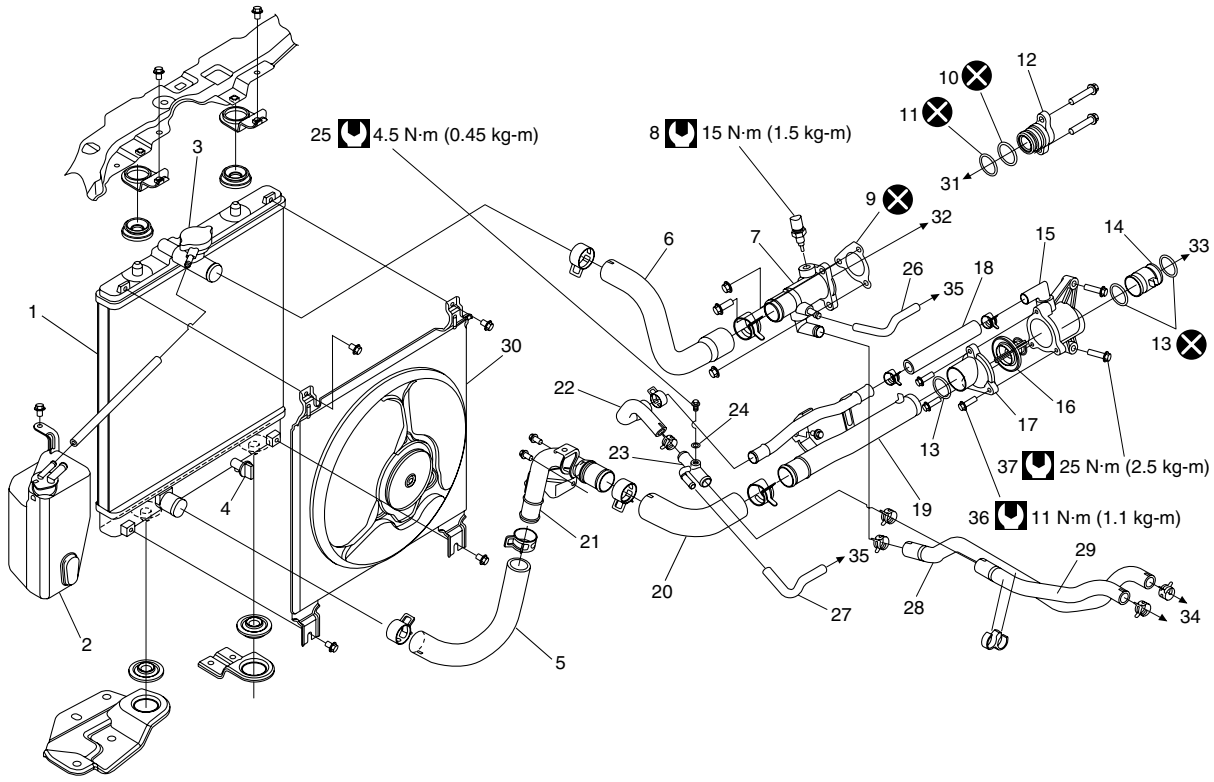

1. Radiator	14. Thermostat case water outlet pipe	27. Throttle body outlet hose
2. Reservoir	15. Thermostat case	28. Heater core inlet hose
3. Radiator cap	16. Thermostat	29. Heater core outlet hose
4. Drain plug	17. Thermostat cap	30. Radiator cooling fan assembly
5. Radiator outlet hose	18. Water bypass hose	31. To timing chain cover
6. Radiator inlet hose	19. Water inlet pipe No.1	32. To cylinder head
7. Water outlet cap	20. Water inlet hose	33. To water pump
8. ECT sensor	21. Water inlet pipe No.2	34. To heater core
9. Gasket	22. Heater outlet hose No.2	35. To throttle body
10. Water outlet cap O-ring No.1	23. Heater union	36. Thermostat cap bolt
11. Water outlet cap O-ring No.2	24. Heater union gasket	37. Thermostat case bolt
12. Water outlet plug	25. Air ventilation bolt	Tightening torque
13. O-ring	26. Throttle body inlet hose	Do not reuse.

Cooling System Draining

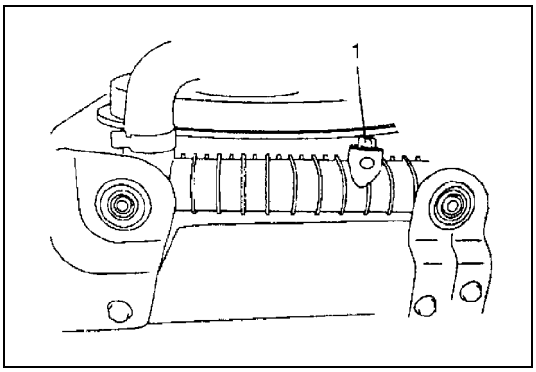

1) Remove radiator cap.
2) Drain coolant from radiator drain plug (1).
3) After draining coolant, be sure to tighten drain plug (1) securely.

Cooling System Refill

Refer to step 7) to 22) of “Cooling System Flush and Refill” in this section.

Cooling Water Pipes or Hoses

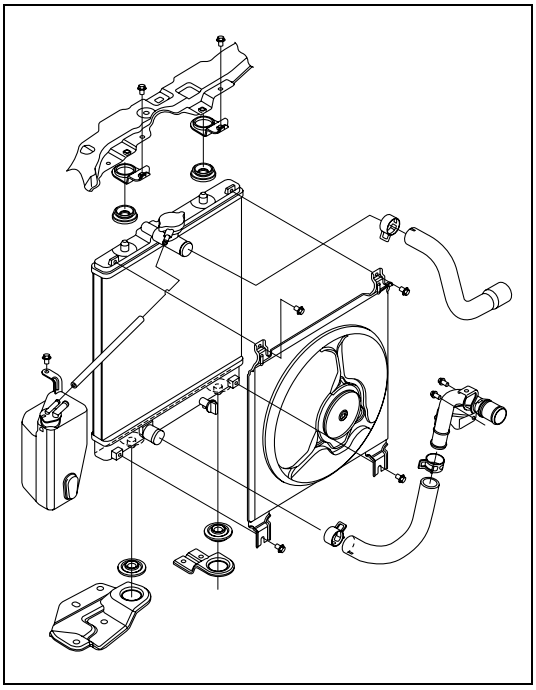

Removal

1) Drain coolant referring to “Cooling System Draining” in this section.
2) To remove these pipes or hoses, loosen clamp on each hose and pull hose end off.

Installation

Install removed parts in reverse order of removal procedure, noting the following.

- Tighten each clamp securely.
- Refill cooling system referring to step 7) to 22) of “Cooling System Flush and Refill” in this section.

Thermostat Removal and Installation

Removal

1) Drain coolant referring to “Cooling System Draining” in this section.
2) Remove intake manifold referring to “Intake Manifold Removal and Installation” in Section 6A1.
3) Remove generator referring to “Generator Dismounting and Remounting” in Section 6H.

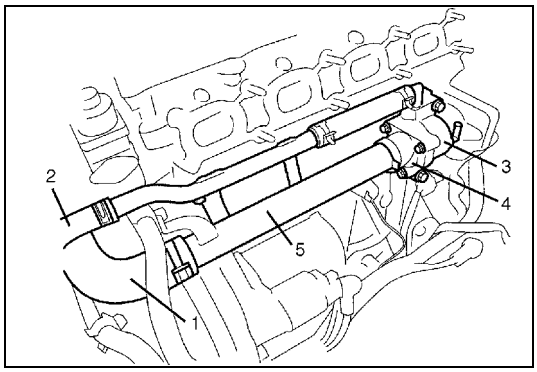

4) Disconnect water hose (1) and heater hose (2) from each pipe.
5) Remove thermostat case (3) with thermostat cap (4) and water inlet pipe (5).
6) Remove water inlet pipe (5) with thermostat cap (4) from thermostat case.
7) Remove thermostat.

Installation

Reverse removal procedure for installation noting the following points.

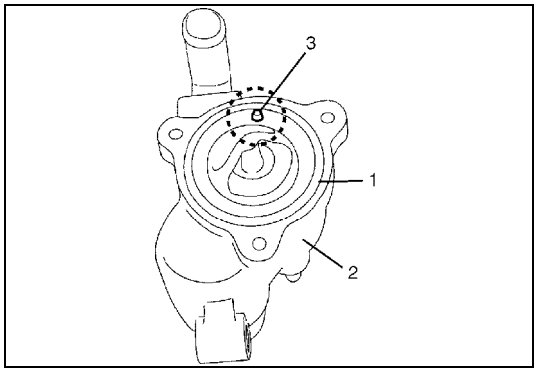

- When positioning thermostat (1) on thermostat case (2), be sure to position it so that air bleed valve (3) comes at position as shown in figure.
- Use new O-rings when installing.
- Adjust water pump belt tension referring to “Water Pump/ Generator Drive Belt Tension Inspection and Adjustment” in this section.
- Adjust A/C compressor belt tension (if equipped) referring to “Compressor Drive Belt Inspection and Adjustment” in Section 1B.
- Refill cooling system referring to step 7) to 22) of “Cooling System Flush and Refill” in this section.
- Verify that there is no coolant leakage at each connection.

Thermostat Inspection

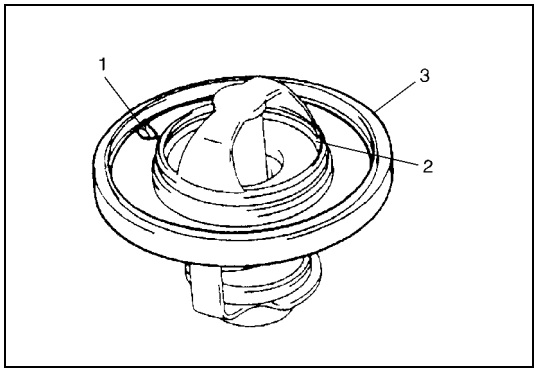

- Make sure that air bleed valve (1) of thermostat is clean. Should this valve be clogged, engine would tend to overheat.
- Check to make sure that valve seat (2) is free from foreign matters which would prevent valve from seating tight.
- Check thermostat seal (3) for breakage, deterioration or any other damage.

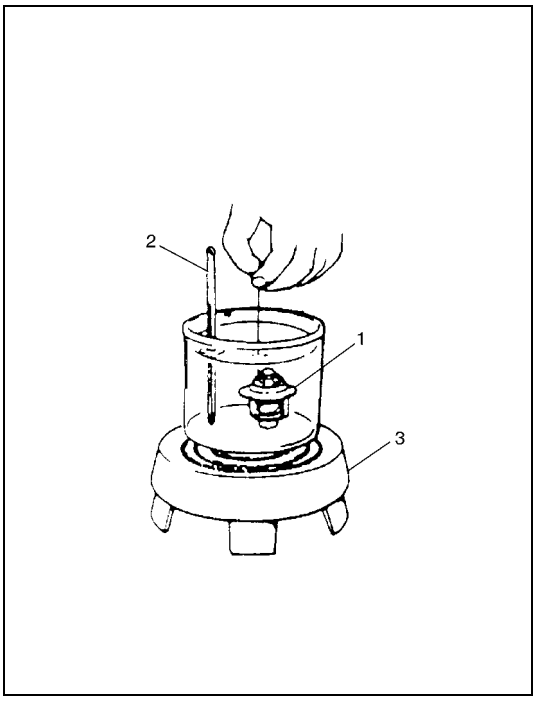

- Check thermostatic movement of wax pellet as follows :

a) Immerse thermostat (1) in water, and heat water gradually as shown.
b) Check that valve starts to open at specific temperature.

Temperature at which valve begins to open
: 80 – 84°C (176 – 183°F)
Temperature at which valve become fully open
: 95 – 97°C (203°F)
Valve lift
: More than 8 mm at 95°C (203°F)

If valve starts to open at a temperature substantially below or above specific temperature, thermostat unit should be replaced with a new one. Such a unit, if reused, will bring about overcooling or overheating tendency.

2. Thermometer
3. Heater

Radiator Removal and Installation

Removal

1) Disconnect negative cable at battery.
2) Drain cooling system referring to “Cooling System Draining” in this section.
3) Remove cooling fan assembly referring to “Radiator Cooling Fan Removal and Installation” in this section.

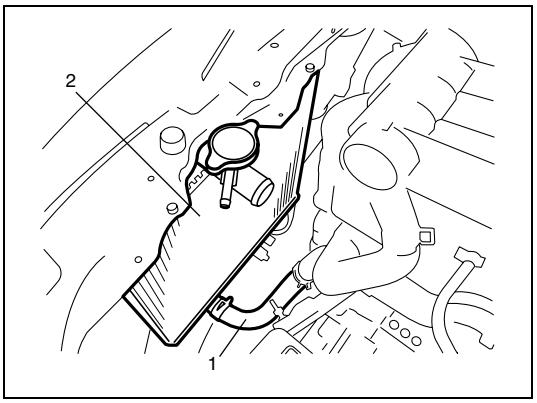

4) Remove radiator outlet hose (1) from radiator (2).
5) Remove radiator (2) from vehicle.

Installation

Reverse removal procedures noting the followings.

- Refill cooling system referring to step 7) to 22) of “Cooling System Flush and Refill” in this section.
- After installation, check each joint for leakage.

Radiator Inspection

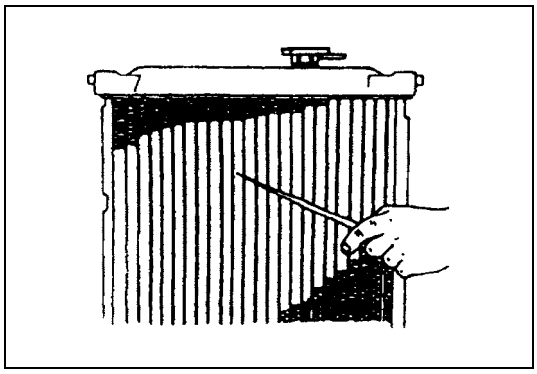

Check radiator for leakage or damage. Straighten bent fins, if any.

Radiator Cleaning

Clean frontal area of radiator cores.

Radiator Cooling Fan Relay Inspection

Refer to “Main relay, fuel pump relay and radiator fan relay inspection” in Section 6E.

Radiator Cooling Fan Removal and Installation

Removal

1) Disconnect negative cable at battery.
2) Drain coolant referring to “Cooling System Draining” in this section.

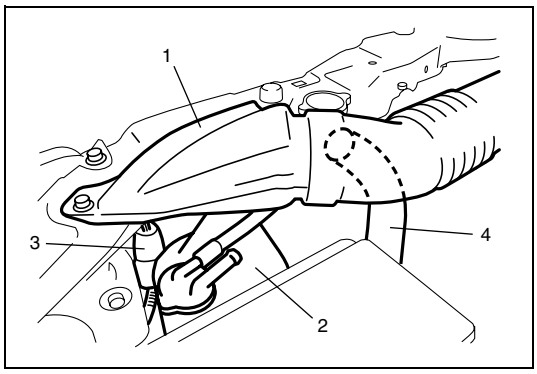

3) Remove air cleaner suction pipe (1) and reservoir (2).
4) Disconnect cooling fan motor connector (3).
5) Remove radiator inlet hose (4) from radiator.

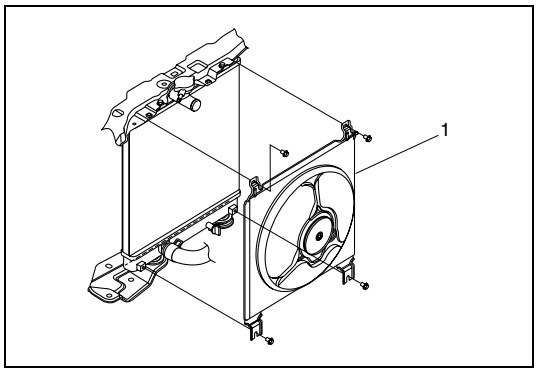

6) Remove radiator cooling fan motor (1) from radiator.

Installation

Reverse removal procedure for installation noting the following.

- Refill cooling system referring to step 7) to 18) of “Cooling System Flush and Refill” in this section.
- After installation, verify there is no coolant leakage at each connection.

Radiator Cooling Fan Inspection

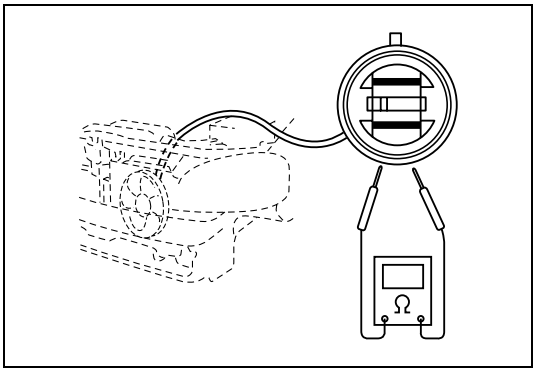

1) Check continuity between terminals. If there is no continuity, replace radiator fan motor.

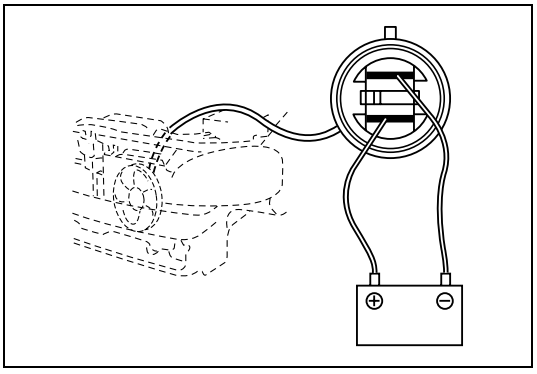

2) Connect battery to radiator fan motor coupler as shown in figure, then check that the radiator fan motor operates smoothly. If radiator fan motor does not operate smoothly, replace motor.

Radiator cooling fan motor specified current at 12 V
10.0 A maximum

Water Pump/Generator Drive Belt Removal and Installation

Removal

1) Disconnect negative cable at battery.

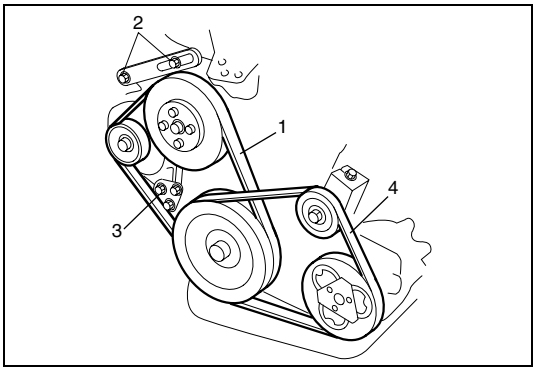

2) If vehicle equipped with A/C, remove compressor drive belt (4) before removing water pump belt (1).
   Refer to “Compressor Drive Belt Replacement” in Section 1B.
3) Loosen drive belt adjusting bolt (2) and generator pivot bolt (3).
4) Slacken belt by displacing generator and then remove it.

Installation

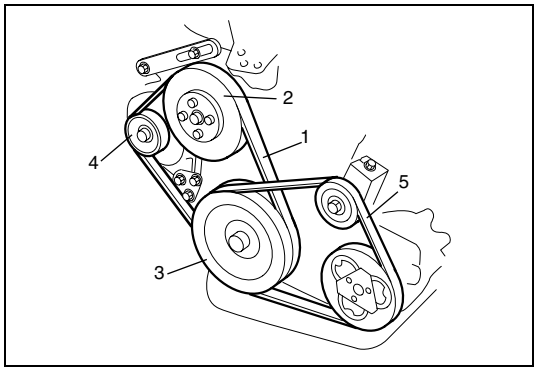

1) Install belt (1) to water pump pulley (2), crankshaft pulley (3) and generator pulley (4).
2) Adjust belt tension by referring to “Water Pump/Generator Drive Belt Tension Inspection and Adjustment” in this section.
3) If vehicle equipped with A/C, install compressor drive belt (5) referring to “Compressor Drive Belt Inspection and Adjustment” in Section 1B.
4) Connect negative cable at battery.

Water Pump Removal and Installation

Removal

1) Disconnect negative cable at battery.
2) Drain coolant referring to “Cooling System Draining” in this section.
3) Remove water pump/generator drive belt referring to Water Pump/Generator Drive Belt Removal and Installation” in this section.

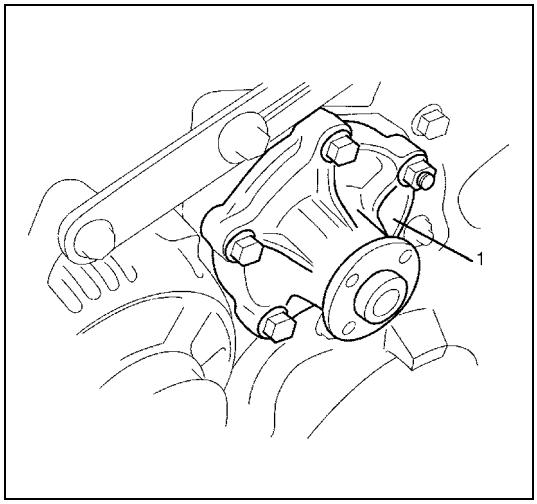

4) Remove water pump assembly (1).

Installation

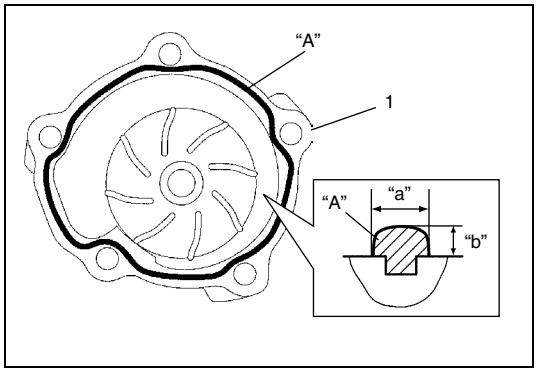

1) Apply sealant to mating surface of water pump (1) as shown in figure.

“A” : Sealant 99000-31150

Sealant quantity (to mating surface of water pump)
Width “a” : 3 mm (0.12 in.)
Height “b” : 2 mm (0.08 in.)

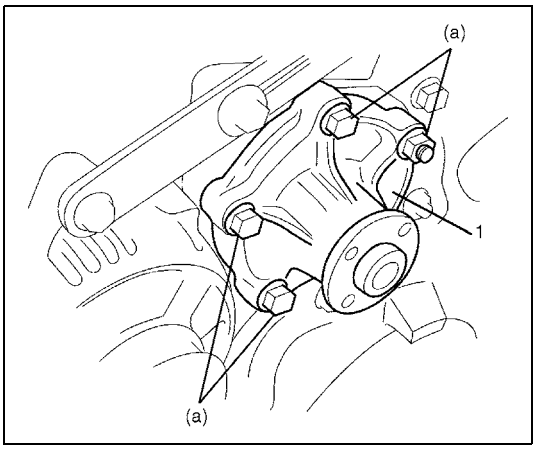

2) Install water pump assembly (1) to cylinder block and tighten bolts and nut to specified torque.

Tightening torque
Water pump bolts and nut (a) : 22 N·m (2.2 kg-m, 16.0 lb-ft)

3) Install water pump pulley.
4) Install water pump/generator drive belt referring to "Water Pump/Generator Drive Belt Removal and Installation" in this Section.
5) Install A/C compressor belt (if equipped) referring to "Compressor Drive Belt Inspection and Adjustment" in Section 1B.
6) Refill cooling system referring to step 7) to 22) of "Cooling System Flush and Refill" in this section.
7) Connect negative cable at battery.
8) Check each part for leakage.

Water Pump Inspection

CAUTION:
Do not disassemble water pump.
If any repair is required on pump, replace it as assembly.

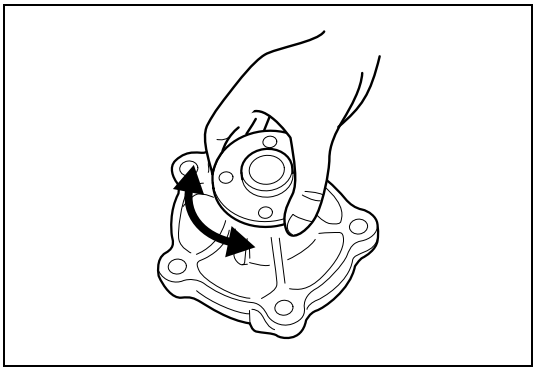

- Rotate water pump by hand to check for smooth operation. If pump does not rotate smoothly or makes abnormal noise, replace it.

Engine Coolant Temperature Sensor (ECT Sensor) Removal and Installation

Refer to "Engine coolant temperature sensor (ECT sensor) removal and installation" in Section 6E1.

Engine Coolant Temperature Sensor (ECT Sensor) Inspection

Refer to "Engine coolant temperature sensor (ECT sensor) inspection" in Section 6E1.

Required Service Material

Material	Recommended SUZUKI product (Part Number)	Use
Ethylene glycol base coolant (Anti-freeze/ Anti-corrosion coolant)	—	Additive to engine cooling system for improving cooling efficiency and for protection against rusting.
Sealant	SUZUKI BOND NO. 1207C (99000-31150)	To apply to mating surface of water pump

Tightening Torque Specification

Fastening part	Tightening torque		
	N•m	kg-m	lb-ft
ETC sensor	15	1.5	11.0
Air ventilation bolt	4.5	0.45	3.5
Thermostat cap bolts	11	1.1	8.0
Thermostat case bolts	25	2.5	18.0
Generator adjusting bolt	23	2.3	17.0
Generator pivot bolt	50	5.0	36.5
Water pump bolts and Nuts	22	2.2	16.0

SECTION 6C

ENGINE FUEL

WARNING:

For vehicles equipped with a Supplemental Restraint (Air Bag) System:

- **Service on and around the air bag system components or wiring must be performed only by an authorized SUZUKI dealer. Refer to "System Components and Wiring Location View" under "General Description" in air bag system section in order to confirm whether you are performing service on or near the air bag system components or wiring. Please observe all WARNINGS and "Service Precautions" under "On-Vehicle Service" in air bag system section before performing service on or around the air bag system components or wiring. Failure to follow WARNINGS could result in unintentional activation of the system or could render the system inoperative. Either of these two conditions may result in severe injury.**
- **Technical service work must be started at least 90 seconds after the ignition switch is turned to the "LOCK" position and the negative cable is disconnected from the battery. Otherwise, the system may be activated by reserve energy in the Sensing and Diagnostic Module (SDM).**

CAUTION:

The engine of this vehicle requires the use of unleaded fuel only. Use of leaded and/or low lead fuel can result in engine damage and reduce the effectiveness of the emission control system.

CONTENTS

General Description 6C-1
On-Vehicle Service 6C-2
Fuel System Components 6C-2
Precautions 6C-3
Fuel Lines Inspection 6C-4
Fuel Pipe Removal and Installation 6C-4
Fuel Filler Cap Inspection 6C-5
Fuel Tank Inlet Valve Removal and Installation 6C-6
Fuel Tank Inlet Valve Inspection 6C-7
Fuel Tank Removal and Installation 6C-7
Fuel Tank Inspection 6C-10
Fuel Tank Purging Procedure 6C-10
Fuel Pump On-Vehicle Inspection 6C-11
Fuel Pump Assembly Removal and Installation 6C-11
Fuel Pump Inspection 6C-12
Special Tool 6C-13
Tightening Torque Specification 6C-13

General Description

The main components of the fuel system are fuel tank, fuel pump assembly (with fuel filter, fuel level gauge, fuel pressure regulator and tank pressure control valve), fuel/vapor separator fuel feed line and fuel vapor line.
For the details of fuel flow and fuel vapor flow, refer to "General Description" in Section 6E1.

On-Vehicle Service

Fuel System Components

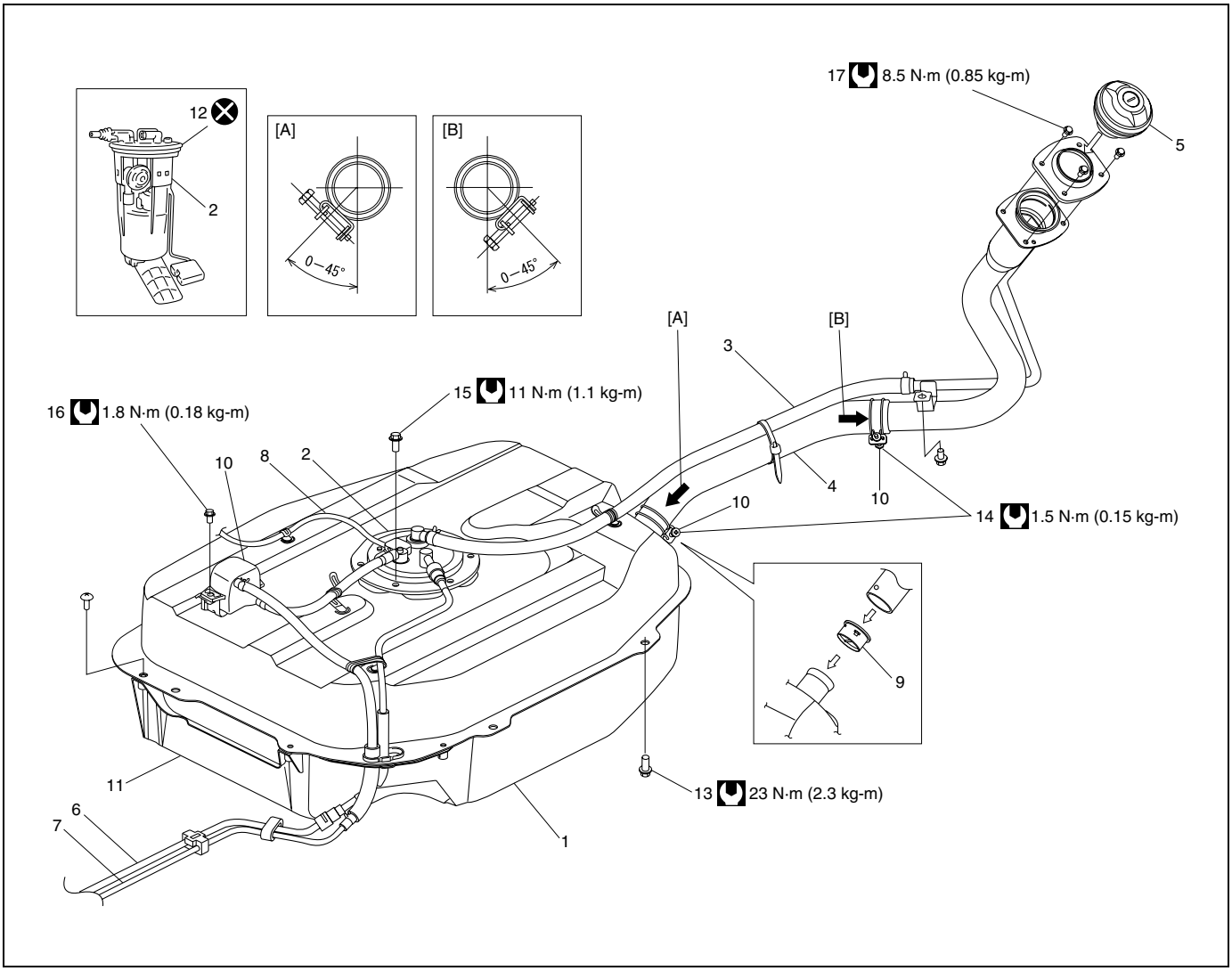

[A] : VIEW: X	4. Fuel tank filler hose	10. Fuel/vapor separator	16. Fuel/vapor separator screw
[B] : VIEW: Y	5. Fuel filler cap	11. Tank cover	17. Fuel filler neck screw
"A" : DOT MARK ON HOSE	6. Fuel feed line	12. Fuel pump gasket	⊗ Do not reuse.
1. Fuel tank	7. Fuel vapor line	13. Fuel tank bolt (4 pcs.)	Tightening torque
2. Fuel pump assembly	8. Wire harness for fuel pump	14. Fuel filler hose clamp screw	
3. Breather hose	9. Fuel tank inlet valve	15. Fuel pump bolt (6 pcs.)	

Precautions

[A]

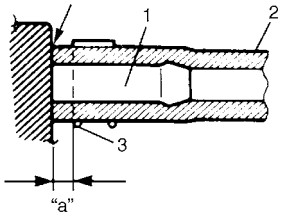

[B]

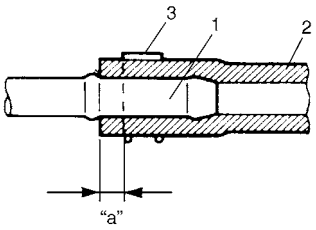

[C]

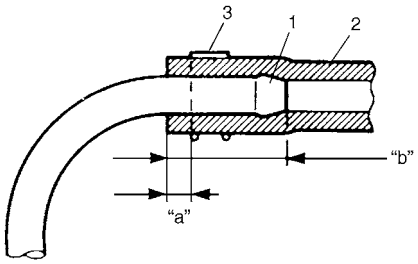

[D]

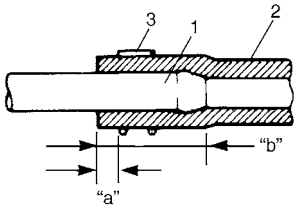

[E]

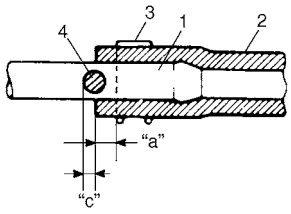

[F]

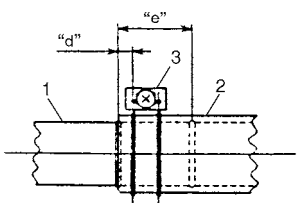

WARNING:

Before attempting service of any type on fuel system, the following should be always observed in order to reduce the risk or fire and personal injury.

- **Disconnect negative cable at battery.**
- **Do not smoke, and place no smoking signs near work area.**
- **Be sure to have CO_2 fire extinguisher handy.**
- **Be sure to perform work in a well-ventilated area and away from any open flames (such as gas hot heater).**
- **Wear safety glasses.**
- **To relieve fuel vapor pressure in fuel tank, remove fuel filler cap from fuel filler neck and then reinstall it.**
- **As fuel feed line is still under high fuel pressure even after engine was stopped, loosening or disconnecting fuel feed line directly may cause dangerous spout of fuel to occur where loosened or disconnected.**
  Before loosening or disconnecting fuel feed line, make sure to relieve fuel pressure "Fuel pressure relief procedure" in Section 6.
- **A small amount of fuel may be released after the fuel line is disconnected. In order to reduce the chance of personal injury, cover the fitting to be disconnected with a shop cloth. Be sure to put that cloth in an approved container when disconnection is completed.**
- **Note that fuel hose connection varies with each type of pipe. Be sure to connect and clamp each hose correctly referring to the figure.**

[A] :	With short pipe, fit hose as far as it reaches pipe joint as shown.
[B] :	With the following type pipe, fit hose as far as its peripheral projection as shown.
[C] :	With bent pipe, fit hose as far as its bent part as shown or till depth "b".
[D] :	With straight pipe, fit hose till depth "b".
[E] :	With red marked pipe, fit hose end reaches red mark on pipe.
[F] :	For fuel tank filler hose, insert it to spool or welding-bead.
1.	Pipe
2.	Hose
3.	Clamp
4.	Ped mark
"a" :	Clamp securely at a position 3 – 7 mm (0.12 – 0.27 in.) from hose end.
"b" :	20 – 30 mm (0.79 – 1.18 in.)
"c" :	0 – 5 mm (0 – 0.19 in.)
"d" :	5 – 12 mm (0.2 – 0.47 in)
"e" :	40 mm (1.57 in)

Fuel Lines Inspection

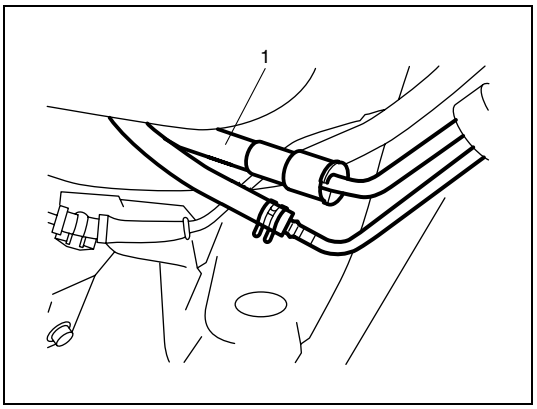

CAUTION:
Due to the fact that fuel feed line (1) is under high pressure, use special care when servicing it.

Visually inspect fuel lines for evidence of fuel leakage, hose crack and deterioration, or damage.
Make sure all clamps are secure.
Replace parts as needed.

Fuel Pipe Removal and Installation

WARNING:
A small amount of fuel may be released after disconnecting fuel hose. In order to reduce the chance of personal injury, cover hose and pipe to be disconnected with a shop cloth.
Be sure to put that cloth in an approved container when disconnection is completed.

Removal

1) Relieve fuel pressure in fuel feed line according to “Fuel pressure relief procedure” in Section 6.
2) Disconnect negative cable at battery.

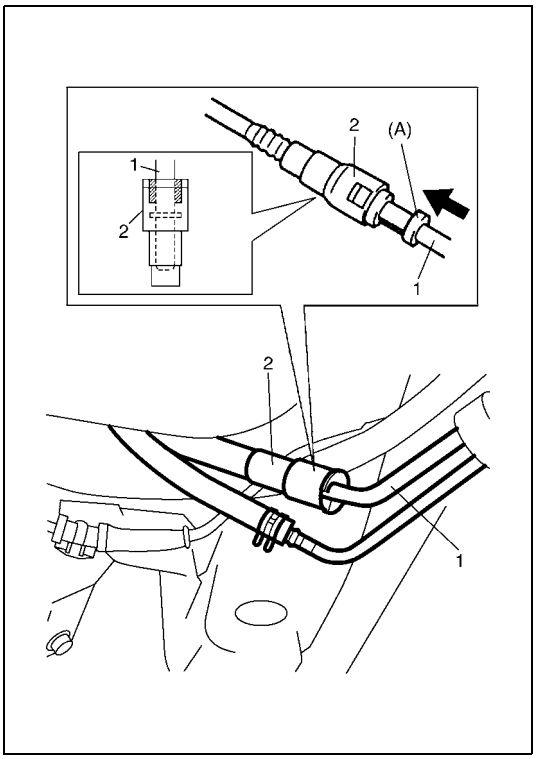

3) Disconnect fuel pipe joint and fuel hose from fuel pipe at the front and rear of each fuel pipe.
   For quick joint (2), disconnect it as follows :
   a) Remove mud, dust and/or foreign material between pipe (1) and joint by blowing compressed air.
   b) Unlock joint lock by inserting special tool between pipe and joint.

   Special tool
   (A) : 09919-47020

   c) Disconnect joint (2) from pipe (1).

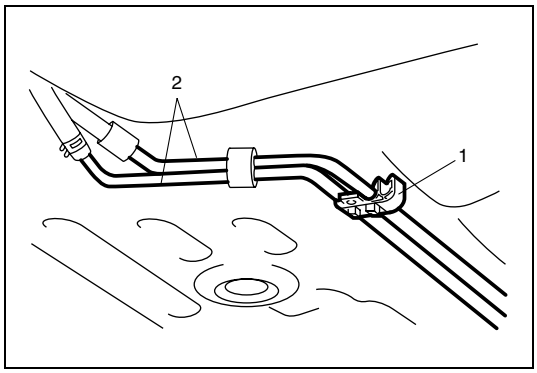

4) Mark the location of clamps (1) on fuel pipes (2), so that the clamps can be reinstalled to where they were.
5) Remove pipes (2) with clamp (1) from vehicle.
6) Remove clamp (1) from pipes (2).

Installation

1) Install clamps to marked location on pipes. If clamp is deformed or its claw is bent or broken, replace it with new one.
2) Install pipes with pipe clamps to vehicle.
3) Connect fuel hoses and pipes to each pipe.

CAUTION:
When connecting joint, clean outside surfaces of pipe where joint is to be inserted, push joint into pipe till joint lock clicks and check to ensure that pipes are connected securely, or fuel leak may occur.

4) With engine OFF, turn ignition switch to ON position and check for fuel leaks.

Fuel Filler Cap Inspection

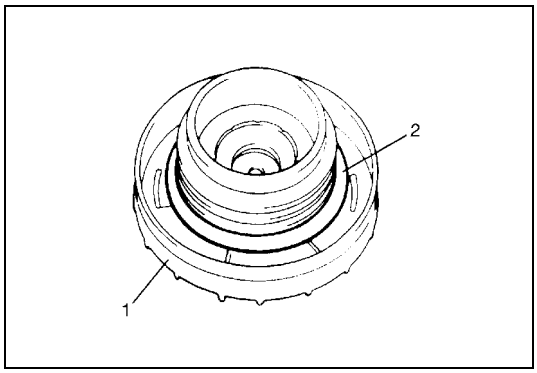

Remove cap (1), and check gasket for even filler neck imprint, and deterioration or any damage. If gasket (2) is in malcondition, replace cap.

NOTE:
If cap requires replacement, only a cap with the same features should be used. Failure to use correct cap can result in critical malfunction of system.

Fuel Tank Inlet Valve Removal and Installation

WARNING:
Before starting the following procedure, be sure to observe "Precautions" in this section.

Removal

1) Remove fuel filler cap.

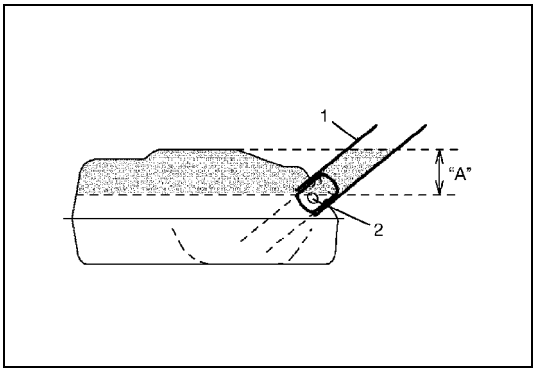

2) Insert hose of a hand operated pump into fuel filler hose (1) and drain fuel in space "A" in the figure.

CAUTION:
Do not force pump hose into fuel tank, or pump hose may damage fuel tank inlet valve (2).

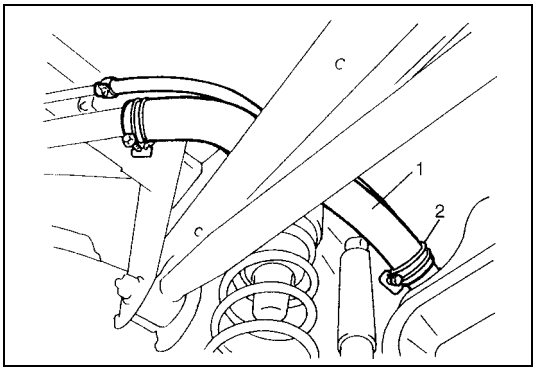

3) Hoist vehicle, and remove clamp (2) and fuel filler hose (1) from fuel tank.

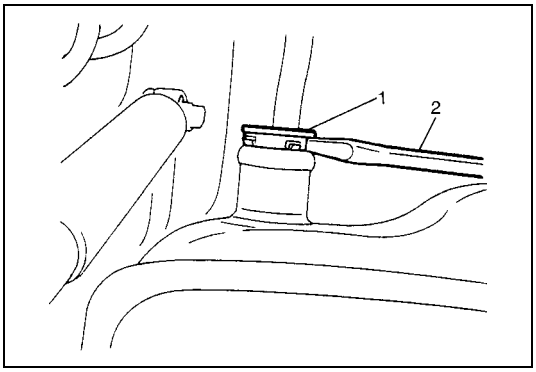

4) Remove fuel tank inlet valve (1) using flat head rod (2) or the like.

CAUTION:
Be careful not to damage fuel tank inlet valve (1) with flat head rod (2) or the like.

Installation

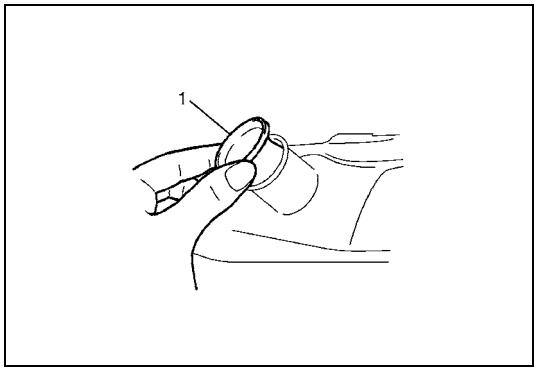

1) Install fuel tank inlet valve (1) to fuel tank.

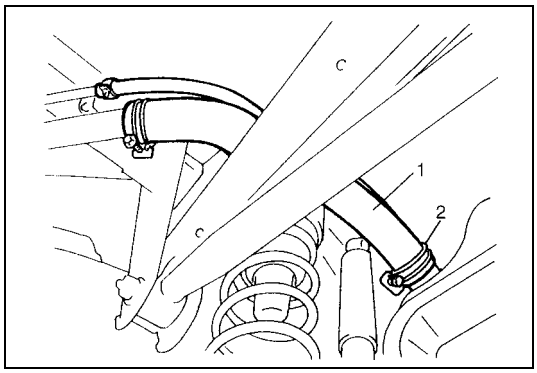

2) Install fuel filler hose (1) to fuel tank and secure it with clamp (2).
   For proper installation, refer to “Fuel System Components” in this section.
3) Lower vehicle and install fuel filler cap.

Fuel Tank Inlet Valve Inspection

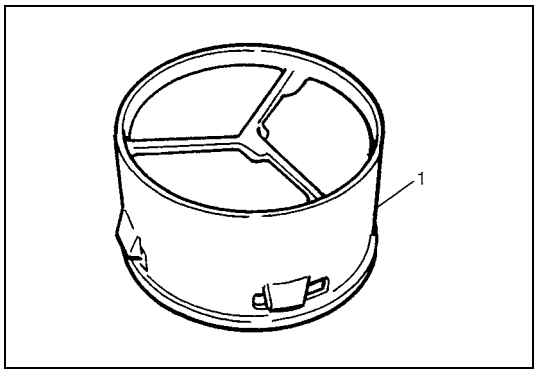

Check fuel tank inlet valve (1) for the following.
- Damage
- Smooth opening and closing

If any damage or malfunction is found, replace.

Fuel Tank Removal and Installation

Removal

WARNING:
- **Before starting the following procedure, be sure to observe “Precautions” in this section.**
- **A small amount of fuel may be released after the fuel hose is disconnected. In order to reduce the chance of personal injury, cover the hose and pipe to be disconnected with a shop cloth. Be sure to put that cloth in an approved container when disconnection is completed.**

1) Relieve fuel pressure in fuel feed line according to “Fuel pressure relief procedure” in Section 6.
2) Disconnect negative cable at battery.
3) Hoist vehicle.

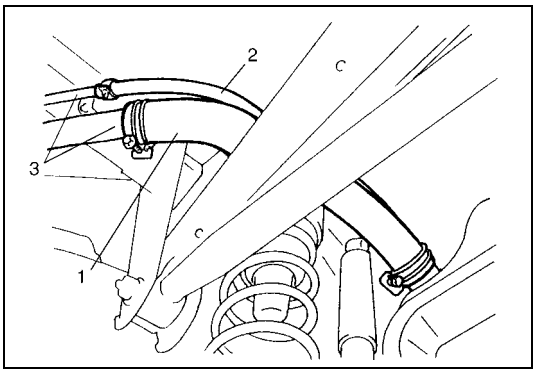

4) Disconnect fuel filler hose (1) and breather hose (2) from filler neck (3).

CAUTION:
Never disconnect fuel filler hose (1) from fuel tank inlet. If half or more of fuel is remaining to fuel tank, fuel over flows in this case and come out.

5) Due to absence of fuel tank drain plug, drain fuel tank by pumping fuel out through fuel tank filler.
Use hand operated pump device to drain fuel tank.

CAUTION:
- **Do not force pump hose into fuel tank, or pump hose may damage fuel tank inlet valve.**
- **Never drain or store fuel in an open container due to possibility of fire or explosion.**

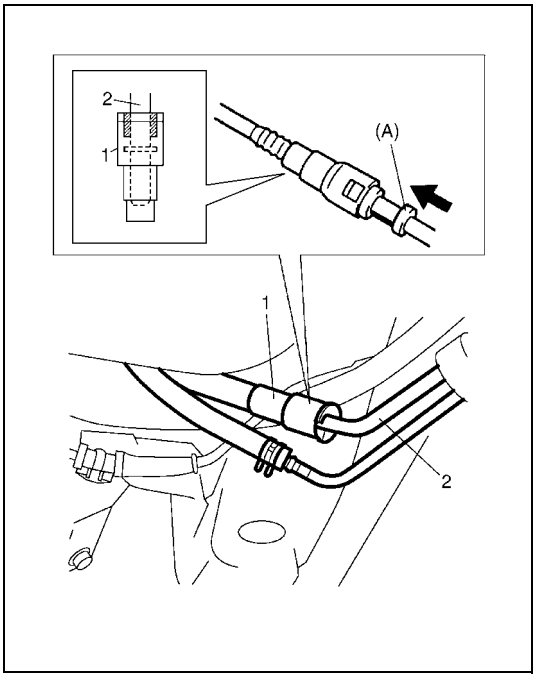

6) Disconnect fuel pipe joint and fuel hoses from pipes.
For quick joint, disconnect it as follows :
a) Remove mud, dust and/or foreign material between pipe and joint by blowing compressed air.
b) Unlock joint (1) lock by inserting special tool between pipe (2) and joint (1).

Special tool
(A) : 09919-47020

c) Disconnect joint from pipe.

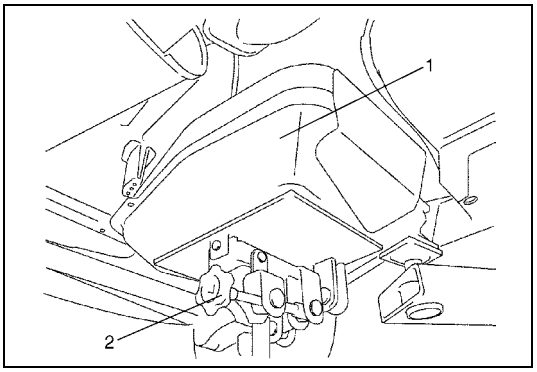

7) Support fuel tank (1) with jack (2) and remove its mounting bolts.

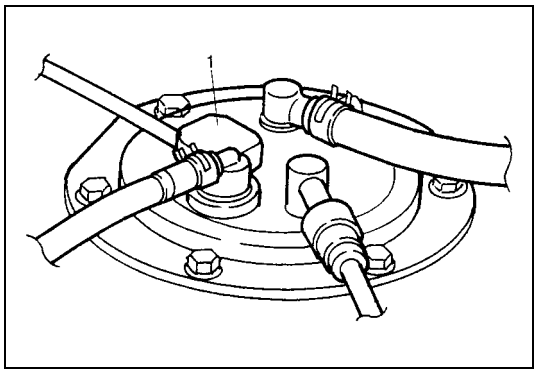

8) Lower fuel tank a little as to disconnect wire harness at connector (1), then remove fuel tank.

Installation

CAUTION:
- **When connecting joint, clean outside surfaces of pipe where joint is to be inserted, push joint into pipe till joint lock clicks and check to ensure that pipes are connected securely, or fuel leak may occur.**
- **Never let the fuel hoses touch the ABS sensor harness (if equipped).**

1) If parts have been removed from fuel tank, install them before installing fuel tank to vehicle.

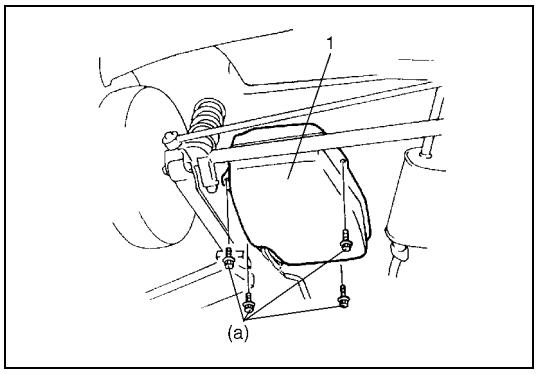

2) Raise fuel tank (1) with jack and connect connector of fuel pump and gauge and clamp wire harness.
3) Install fuel tank (1) to vehicle.

Tightening torque
Fuel tank bolt (a) : 23 N·m (2.3 kg-m, 17.0 lb-ft)

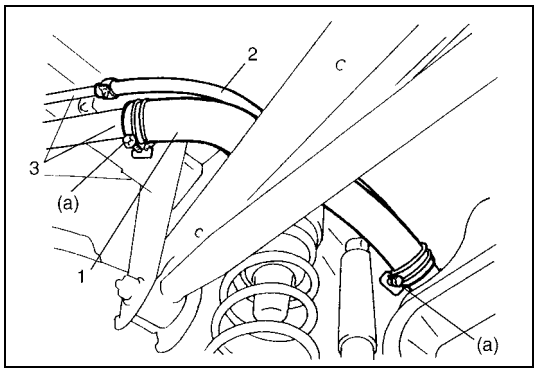

4) Connect fuel filler hose (1) and breather hose (2) to filler neck (3) as shown in figure and clamp them securely.

Tightening torque
Fuel filler hose clamp (a) : 1.5 N·m (0.15 kg-m, 1.0 lb-ft)

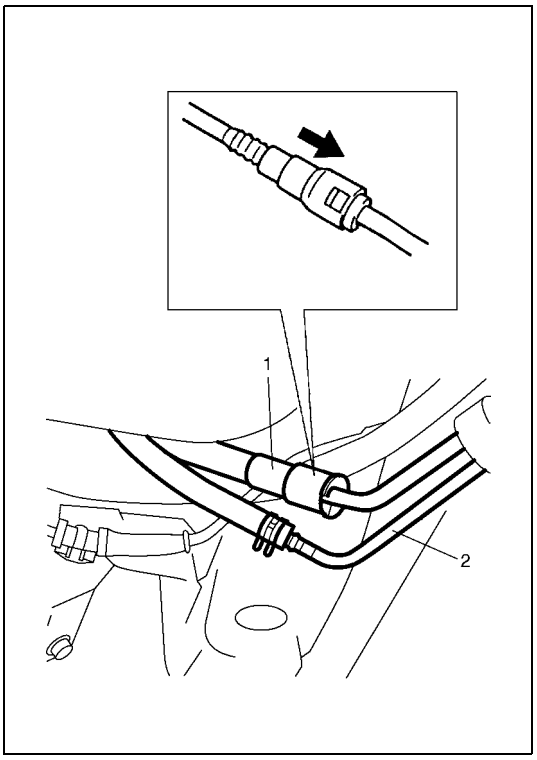

5) Connect fuel feed hose (1) and vapor hose (2) to each pipe as shown in figure and clamp them securely.
6) Connect negative cable at battery.
   With engine OFF, turn ignition switch to ON position and check for fuel leaks.

Fuel Tank Inspection

After removing fuel tank, check hoses and pipes connected to fuel tank for leaks, loose connections, deterioration or damage. Also check fuel pump assembly gaskets for leaks, visually inspect fuel tank for leaks and damage.
Replace any damaged or malconditioned parts.

Fuel Tank Purging Procedure

WARNING:
This purging procedure will not remove all fuel vapor. Do not attempt any repair on tank using heat of flame as an explosion resulting in personal injury could occur.

CAUTION:
Never remain water in fuel tank after washing, or fuel tank inside will get corrosion.

The following procedure are used for purging fuel tank.

1) After removing fuel tank, remove all hoses, pipes and fuel pump assembly from fuel tank.
2) Drain all remaining fuel from tank.
3) Place fuel tank to flushing area.
4) Fill tank with warm water or tap water, and agitate vigorously and drain. Repeat this washing until inside of tank is clean. Replace tank if its inside is rusty.
5) Completely flush out remaining water after washing.

Fuel Pump On-Vehicle Inspection

Refer to “Fuel Delivery System” and/or “Fuel pump with pressure regulator on-vehicle inspection” in Section 6E1.

Fuel Pump Assembly Removal and Installation

WARNING:

Before starting the following procedure, be sure to observe “Precautions” in this section.

Removal

1) Remove fuel tank from vehicle referring to “Fuel Tank Removal and Installation” in this section.

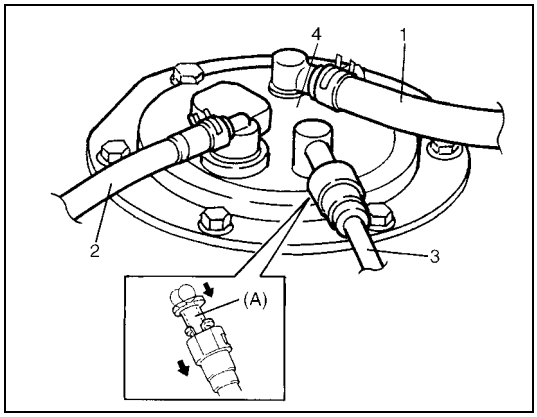

2) Disconnect fuel breather hose (1), fuel vapor hose (2) and pipes from fuel pump assembly (4).
   When disconnecting joint of fuel feed line (3) from pipe, unlock joint by inserting special tool between pipe and joint lock first.

Special tool
(A) : 09919-47020

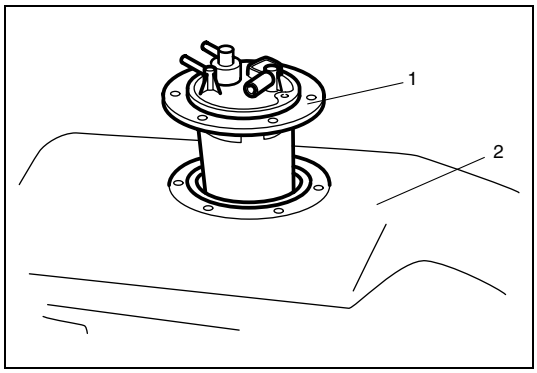

3) Remove fuel pump assembly (1) from fuel tank (2).

Installation

CAUTION:

When connecting joint, clean outside surface of pipe where joint is to be inserted, push joint into pipe till joint lock clicks and check to ensure that pipes are connected securely, or fuel leak may occur.

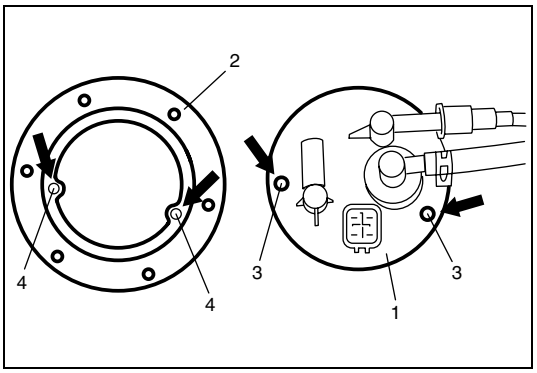

1) Clean mating surfaces of fuel pump assembly (1) and fuel tank.
2) Put plate (2) on fuel pump assembly (1) by matching the protrusion of fuel pump assembly (3) to plate hole (4) as shown.

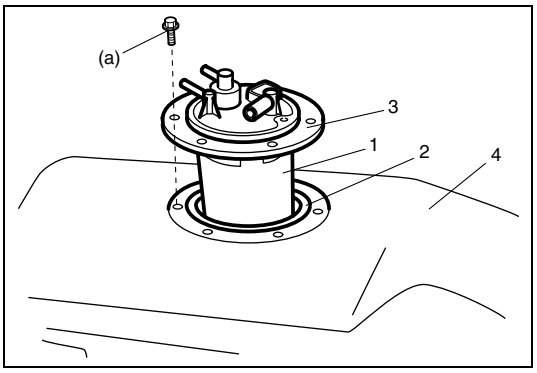

3) Install new gasket (2) and fuel pump assembly (1) with plate (3) to fuel tank (4).

Tightening torque
Fuel pump assembly bolts (a) : 11 N·m (1.1 kg-m, 8.0 lb-ft)

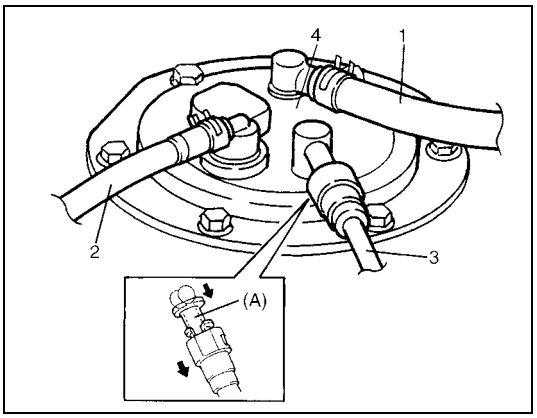

4) Connect fuel breather hose (1), fuel vapor hose (2) and fuel feed line (3) (pipe joint) to fuel pump assembly (4).

5) Install fuel tank (1) to vehicle referring to “Fuel Tank Removal and Installation” in this section.

Fuel Pump Inspection

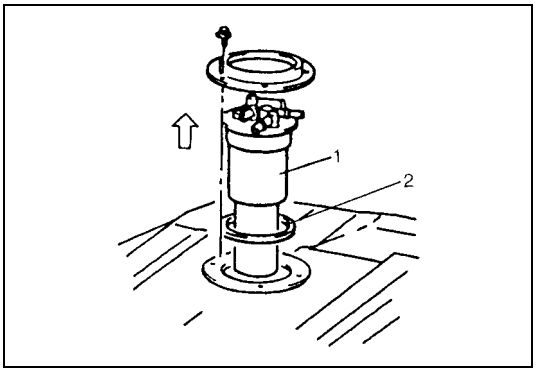

- Check fuel pump assembly for damage.
- Check fuel suction filter (1) for evidence of dirt and contamination.
  If present, replace or clean and check for presence of dirt in fuel tank.
- For electrical circuit, refer to “Table B-3 Fuel Pressure Check” in Section 6.
- For inspection of fuel level gauge (2), refer to “Fuel Level Sensor (Gauge Unit) Inspection” in Section 8C.

Special Tool

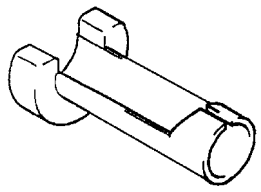

09919-47020
Quick joint remover

Tightening Torque Specification

Fastening part	Tightening torque		
	N•m	kg-m	lb-ft
Fuel tank bolts	23	2.3	17.0
Fuel filler hose clamps	1.5	0.15	1.0
Fuel pump assembly bolts	11	1.1	8.0
Fuel filler neck bolts	8.5	0.85	6.5
Fuel/vapor separator screw	1.8	0.18	1.5

SECTION 6E1

ENGINE AND EMISSION CONTROL SYSTEM

WARNING:

For vehicles equipped with a Supplemental Restraint (Air Bag) System:

- **Service on and around the air bag system components or wiring must be performed only by an authorized SUZUKI dealer. Refer to "System Components and Wiring Location View" under "General Description" in Section 10B in order to confirm whether you are performing service on or near the air bag system components or wiring. Please observe all WARNINGS and "Service Precautions" under "On-Vehicle Service" in Section 10B before performing service on or around the air bag system components or wiring. Failure to follow WARNINGS could result in unintentional activation of the system or could render the system inoperative. Either of these two conditions may result in severe injury.**
- **Technical service work must be started at least 90 seconds after the ignition switch is turned to the "LOCK" position and the negative cable is disconnected from the battery. Otherwise, the system may be activated by reserve energy in the Sensing and Diagnostic Module (SDM).**

CONTENTS

General Description 6E1-3
- Engine and Emission Control System Construction 6E1-3
- Air Intake System Description 6E1-6
- Fuel Delivery System Description 6E1-7
- Electronic Control System Description 6E1-8

On-Vehicle Service 6E1-15
- Accelerator cable adjustment 6E1-15
- Idle speed/idle air control (IAC) duty inspection 6E1-15
- Air Intake System 6E1-17
  - Throttle body Components 6E1-17
  - Throttle body on-vehicle inspection 6E1-17
  - Throttle body removal and installation 6E1-17
  - Throttle body cleaning 6E1-19
  - Idle air control (IAC) valve removal and installation 6E1-19
  - Idle air control (IAC) valve inspection 6E1-19
  - Oil control valve removal and installation 6E1-20
  - Oil control valve inspection 6E1-20
- Fuel Delivery System 6E1-21
  - Fuel pressure inspection 6E1-21
  - Fuel pump with pressure regulator on-vehicle inspection 6E1-22
  - Fuel pump with pressure regulator removal and installation 6E1-23
  - Fuel pump with pressure regulator inspection 6E1-23
  - Fuel injector on-vehicle inspection 6E1-23
  - Fuel injector removal and installation 6E1-24
  - Fuel injector inspection 6E1-25
- Electronic Control System 6E1-27
  - Engine control module (ECM) removal and installation 6E1-27
  - Manifold absolute pressure sensor (MAP sensor) inspection 6E1-28
  - Throttle position sensor (TP sensor) on-vehicle inspection 6E1-28
  - Throttle position sensor (TP sensor) removal and installation 6E1-28
  - Engine coolant temperature sensor (ECT sensor) removal and installation 6E1-29
  - Engine coolant temperature sensor (ECT sensor) inspection 6E1-30
  - Heated oxygen sensor (HO2S-1 and HO2S-2) heater on-vehicle inspection 6E1-30
  - Heated oxygen sensor (HO2S-1 and HO2S-2) removal and installation 6E1-31
  - Camshaft position sensor (CMP sensor) inspection 6E1-31
  - Camshaft position sensor (CMP sensor) removal and installation 6E1-32
  - Crankshaft position sensor (CKP sensor) inspection 6E1-32
  - Crankshaft position sensor (CKP sensor) removal and installation 6E1-32
  - Fuel Level Sensor Removal and Installation 6E1-33

Fuel Level Sensor Inspection..... 6E1-33
Vehicle speed sensor (VSS) inspection..... 6E1-33
Vehicle speed sensor (VSS) removal and installation..... 6E1-33
Knock sensor inspection..... 6E1-33
Knock sensor removal and installation..... 6E1-34
Main relay, fuel pump relay and radiator fan relay inspection..... 6E1-34
Fuel cut operation inspection..... 6E1-35
Radiator fan control system inspection..... 6E1-35
Mass air flow (MAF) and intake air temperature (IAT) sensor on-vehicle inspection..... 6E1-35
Mass air flow (MAF) and intake air temperature (IAT) sensor removal and installation..... 6E1-36
Mass air flow (MAF) and intake air temperature (IAT) sensor inspection..... 6E1-37
Emission Control System..... 6E1-38
EGR system inspection..... 6E1-38
EGR valve removal and installation..... 6E1-38
EGR valve inspection..... 6E1-38
Evaporative emission control system inspection..... 6E1-39
PCV system inspection..... 6E1-42
Special Tool..... 6E1-43
Tightening Torque Specification..... 6E1-44

General Description

Engine and Emission Control System Construction

The engine and emission control system is divided into 4 major sub-systems: air intake system, fuel delivery system, electronic control system and emission control system.
Air intake system includes air cleaner, throttle body, IAC valve and intake manifold.
Fuel delivery system includes fuel pump, delivery pipe, etc. Electronic control system includes ECM, various sensors and controlled devices.
Emission control system includes EGR, EVAP and PCV system.

ENGINE AND EMISSION CONTROL SYSTEM FLOW DIAGRAM

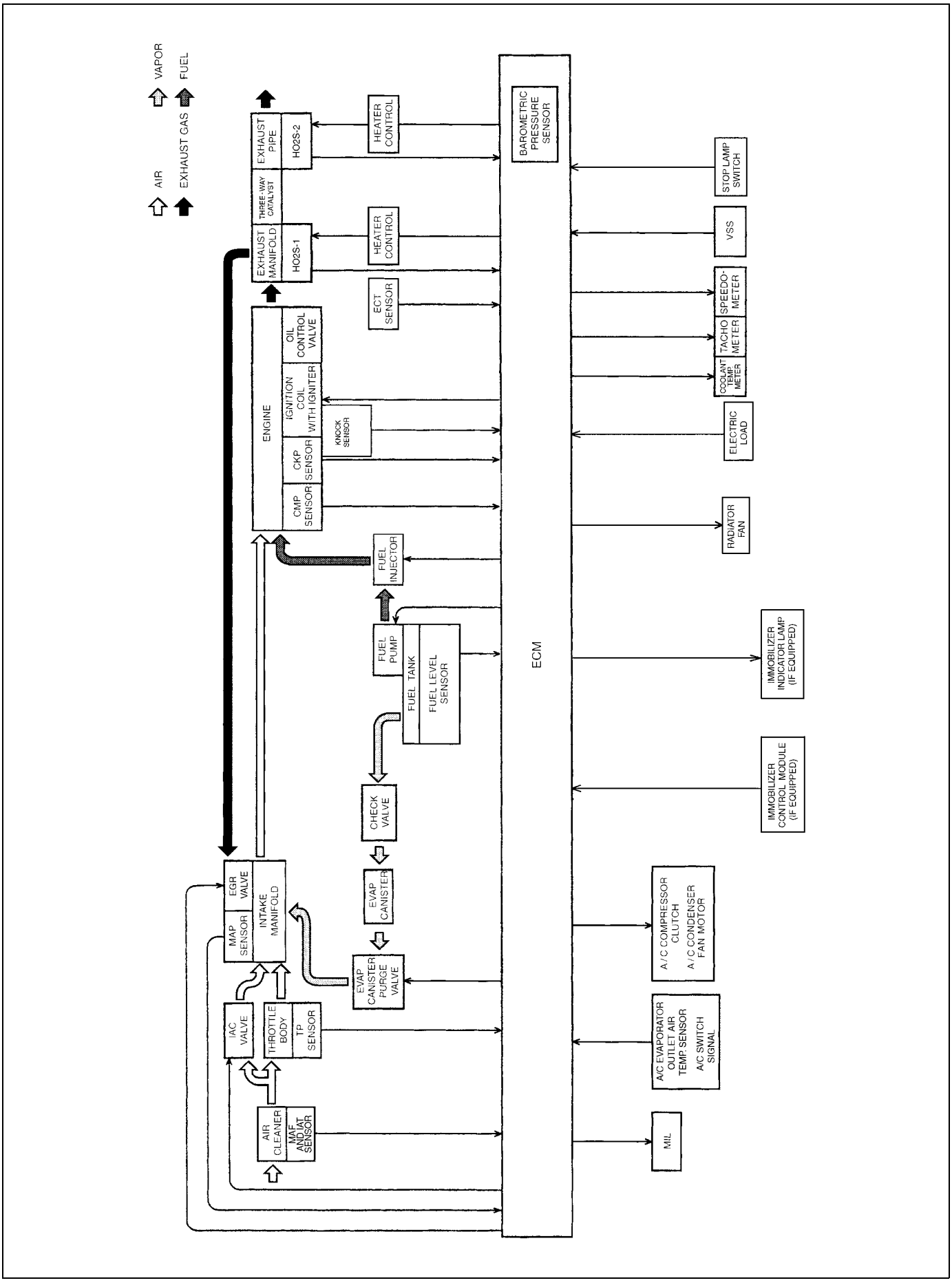

ENGINE AND EMISSION CONTROL SYSTEM DIAGRAM

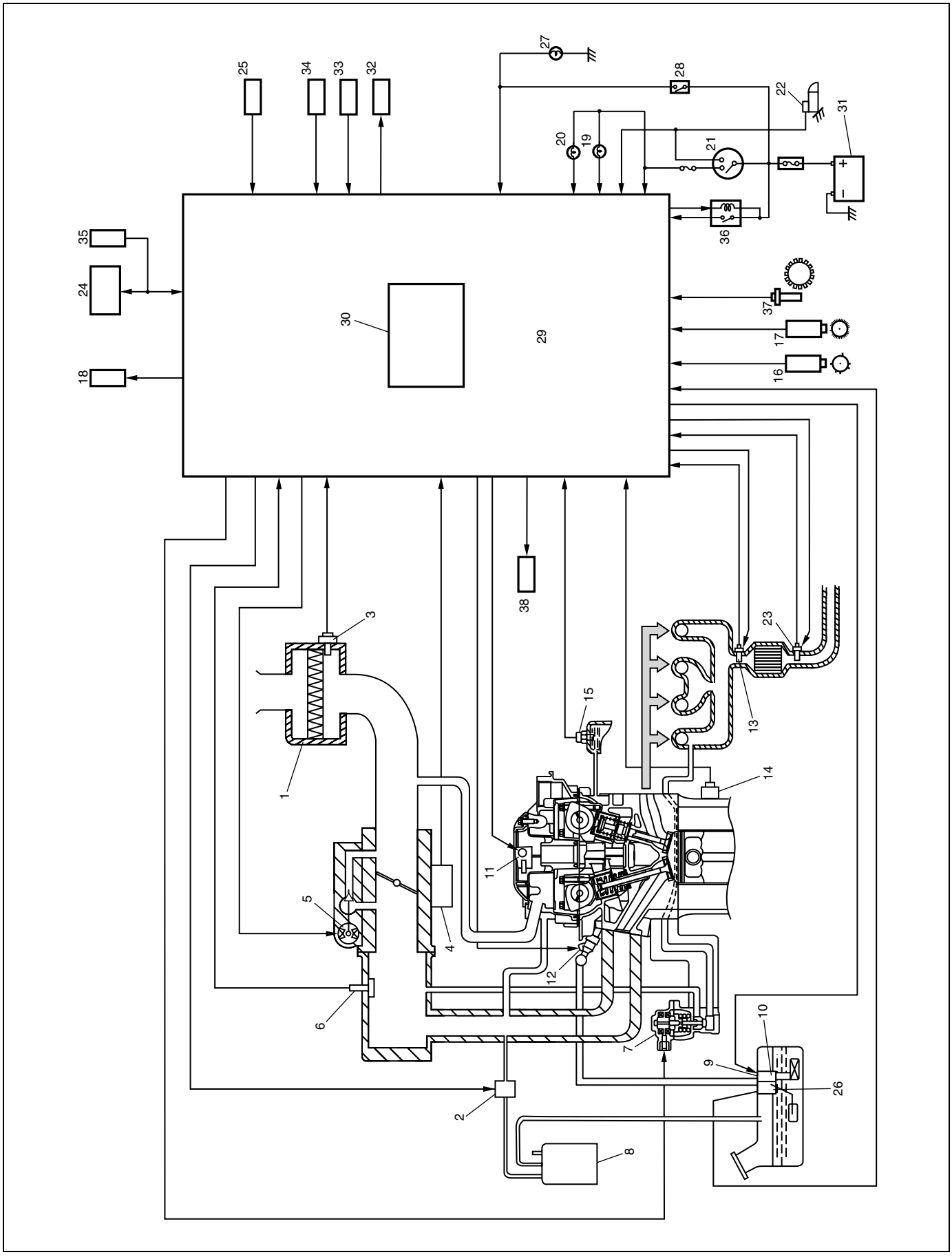

1. Air Cleaner	14. Knock sensor	27. Stop lamp
2. EVAP canister purge valve	15. ECT sensor	28. Stop lamp switch
3. MAF and IAT sensor	16. CMP sensor	29. ECM
4. TP sensor	17. CKP sensor	30. Barometric pressure sensor (if equipped)
5. IAC valve	18. Radiator fan	31. Battery
6. MAP sensor	19. Malfunction indicator lamp in combination meter	32. A/C compressor and condenser fan relay (if equipped)
7. EGR valve	20. Immobilizer indicator lamp in combination meter	33. A/C switch (if equipped)
8. EVAP canister	21. Ignition switch	34. A/C evaporator outlet air temp. sensor (if equipped)
9. Tank pressure control valve (built-in fuel pump)	22. Starter magnetic switch	35. Immobilizer control module (if equipped)
10. Fuel pump (with pressure regulator)	23. Heated Oxygen Sensor–2 (HO2S–2)	36. Main relay
11. Ignition coil assembly	24. DLC	37. VSS
12. Fuel injector	25. Electric load	38. Oil control valve
13. Heated Oxygen Sensor–1 (HO2S–1)	26. Fuel level sensor	

Air Intake System Description

The main components of the air intake system are air cleaner (1), air cleaner outlet hose (2), throttle body (3), idle air control valve (4) and intake manifold (5).

The air (by the amount corresponding to the throttle valve (6) opening and engine speed) is filtered by the air cleaner (1), passes through the throttle body (3), is distributed by the intake manifold (5) and finally drawn into each combustion chamber.

When the idle air control valve (4) is opened according to the signal from ECM, the air (7) bypasses the throttle valve (6) through bypass passage and is finally drawn into the intake manifold (5).

AIR INTAKE SYSTEM DIAGRAM

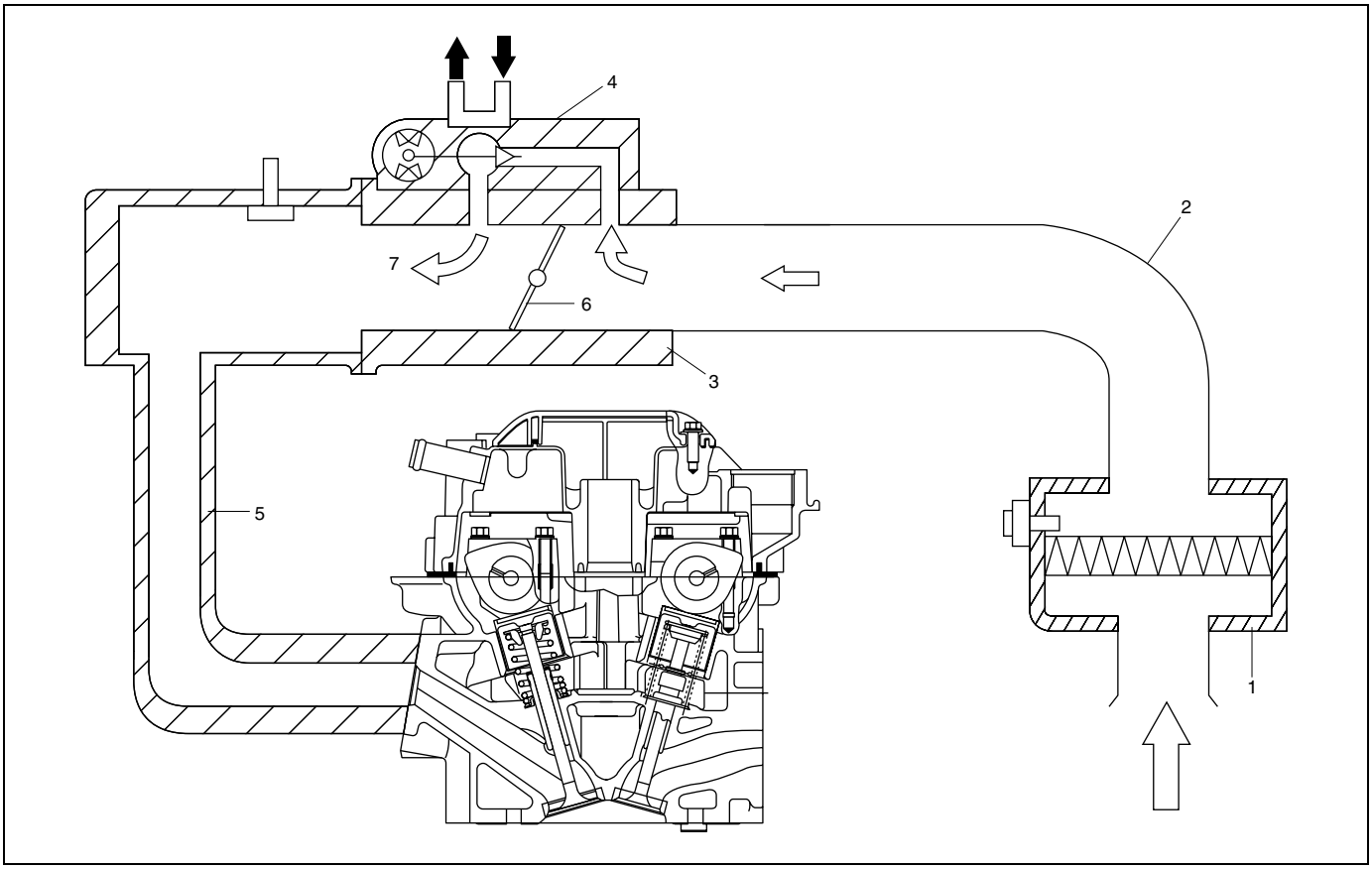

Fuel Delivery System Description

The fuel system consists of fuel tank (1), fuel pump (2) (with built-in fuel filter (3) and fuel pressure regulator (4)), delivery pipe (5), injectors (6) and fuel feed line (7).
The fuel (8) in the fuel tank (1) is pumped up by the fuel pump (2), sent into delivery pipe (5) and injected by the injectors (6).
As the fuel pump assembly is equipped with built-in fuel filter (3) and fuel pressure regulator (4), the fuel (8) is filtered and its pressure is regulated before being sent to the delivery pipe (5).
The excess fuel from fuel pressure regulation process is returned back (9) into the fuel tank.
Also, fuel vapor generated in fuel tank is led through the fuel vapor line (10) into the EVAP canister (12).

FUEL DELIVERY SYSTEM DIAGRAM

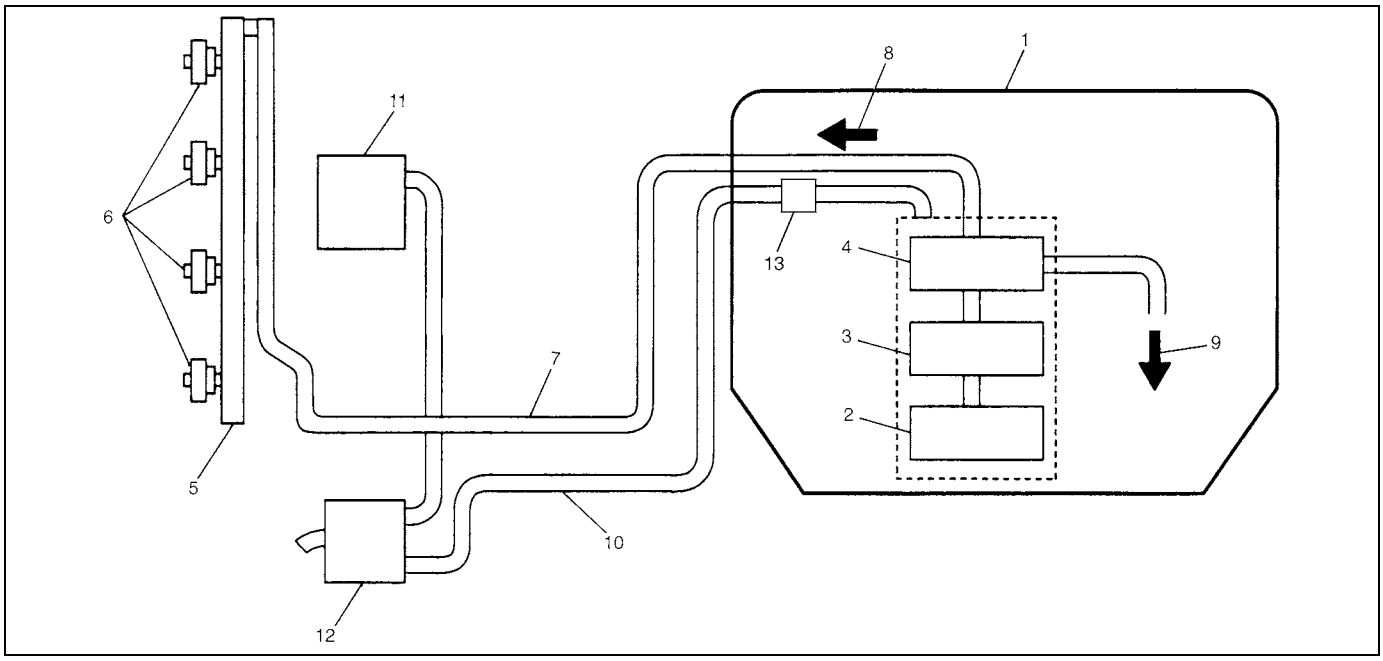

11. Intake manifold	13. Fuel vapor separator

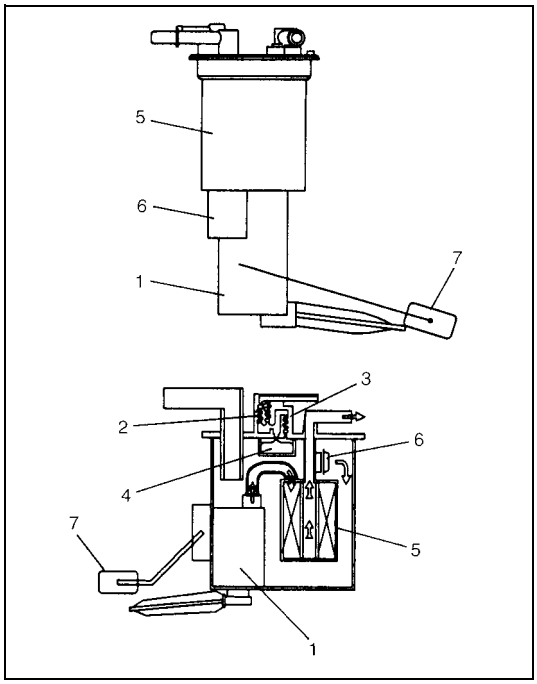

FUEL PUMP

An in-tank type electric pump has been adopted for the fuel pump (1). Incorporated in the pump assembly are;

- Tank pressure control valve (2) which keeps the pressure in the fuel tank constant, and prevents the fuel from spouting and tank itself from being deformed.
- Relief valve (3) which prevents the pressure in tank from rising excessively.
- Fuel cut valve (4) which closes as the float rises so that the fuel will not enter the canister when the fuel level in the tank rises high depending on the fuel level in the tank and the vehicle tilt angle.

Also, a fuel filter (5) and a fuel pressure regulator (6) are included and a fuel level gauge (7) is attached.
Addition of the fuel pressure regulator (6) to the fuel pump makes it possible to maintain the fuel pressure at constant level and ECM controls compensation for variation in the intake manifold pressure.

Electronic Control System Description

The electronic control system consists of 1) various sensors which detect the state of engine and driving conditions, 2) ECM which controls various devices according to the signals from the sensors and 3) various controlled devices.

Functionally, it is divided into nine sub systems:

- Fuel injection control system
- Idle speed control system
- Fuel pump control system
- A/C control system (if equipped)
- Radiator fan control system
- EGR system
- Evaporative emission control system
- Oxygen sensor heater control system
- Ignition control system

ELECTRONIC CONTROL SYSTEM COMPONENT LOCATION

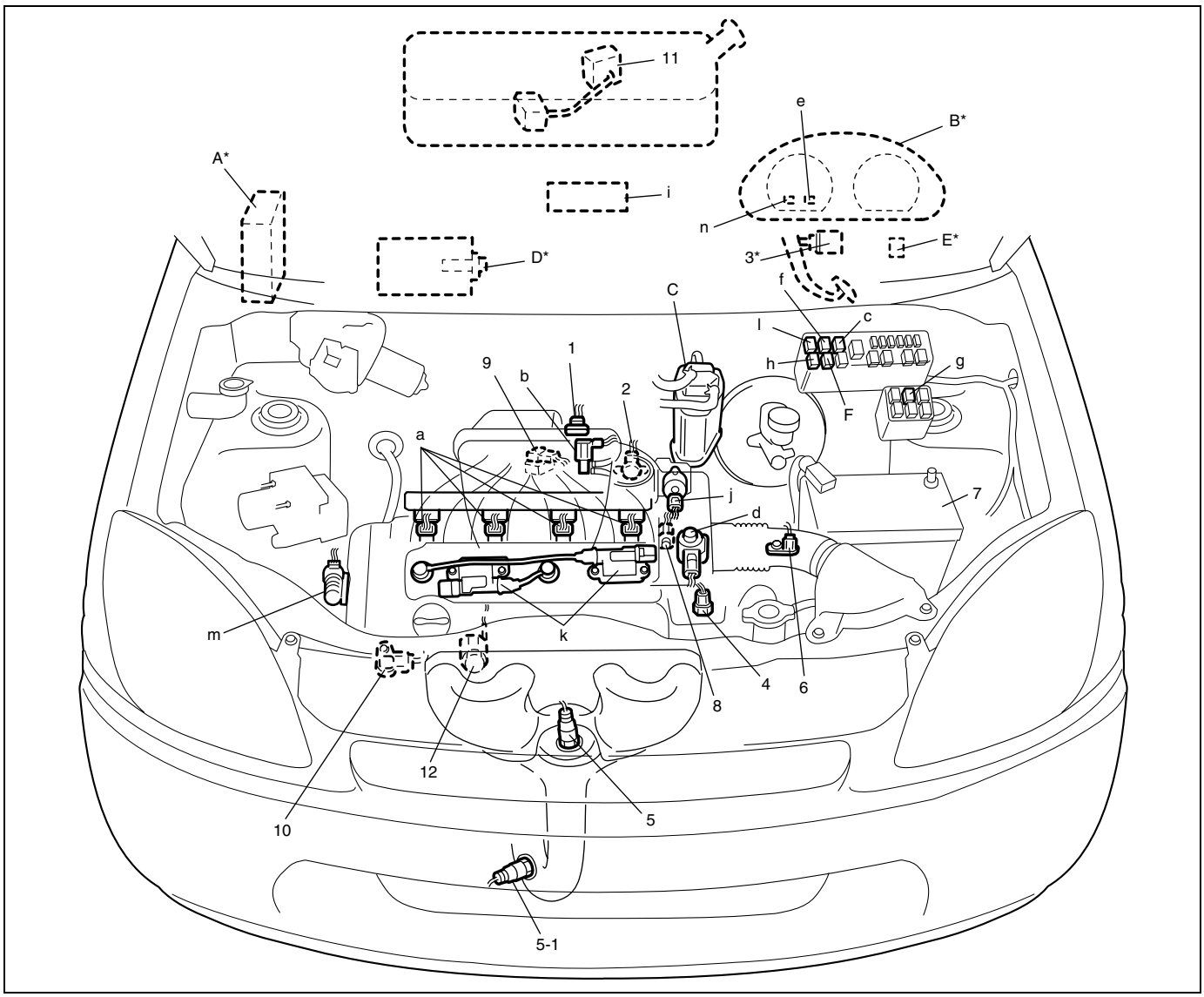

INFORMATION SENSORS	CONTROL DEVICES	OTHERS
1. MAF and IAT sensor	a: Fuel injector	A: ECM
2. TP sensor	b: EVAP canister purge valve	B: Combination meter
3. Stop lamp switch	c: Fuel pump relay	C: EVAP canister
4. ECT sensor	d: EGR valve	D: A/C evaporator outlet air temp. sensor (if equipped)
5. Heated oxygen sensor–1	e: Malfunction indicator lamp	E: Data link connector
5-1. Heated oxygen sensor–2	f: A/C condenser fan relay No.1 (if equipped)	F: A/C compressor relay (if equipped)
6. VSS	g: A/C condenser fan relay No.2 (if equipped)	
7. Battery	h: Radiator fan relay	
8. CMP sensor	i: Fuel cost meter	
9. MAP sensor	j: IAC valve	
10. CKP sensor	k: Ignition coil assembly (with ignitor)	
11. Fuel level sensor	l: Main relay	
12. Knock sensor	m: Oil control valve	
	n: Immobilizer indicator lamp	

NOTE:

Above figure shows left-hand steering vehicle. For right-hand steering vehicle, parts with (*) are installed at the opposite side.

ENGINE AND EMISSION CONTROL INPUT/OUTPUT TABLE

INPUT \ OUTPUT		ELECTRIC CONTROL DEVICE											
		FUEL PUMP RELAY	FUEL INJECTOR	HO2S HEATER	IAC VALVE	IGNITION COIL WITH IGNITER	EGR VALVE	EVAP CANISTER PURGE VALVE	A/C COMPRESSOR AND CONDENSER FAN RELAY	RADIATOR FAN RELAY	MIL	MAIN RELAY	OIL CONTROL VALVE
SIGNAL FROM SENSOR, SWITCH AND CONTROL MODULE	FUEL LEVEL SENSOR	For detecting fuel level											
	BAROMETRIC PRESSURE SENSOR		○		○	○		○			○		
	STOP LAMP SWITCH				○								
	START SWITCH	○	○	○	○		○		○		○		○
	IGNITION SWITCH	○	○	○	○	○	○	○	○	○		○	○
	LIGHTING SWITCH				○								
	BLOWER SWITCH				○				○				
	A/C SWITCH				○			○	○	○			
	A/C EVAP OUTLET AIR TEMP. SENSOR				○				○				
	VSS		○		○		○		○	○	○		○
	HEATED OXYGEN SENSOR-1		○					○			○		
	HEATED OXYGEN SENSOR-2	For detecting deterioration of three way catalytic converter									○		
	MAF SENSOR		○	○	○	○	○	○			○		
	IAT SENSOR		○		○	○	○	○			○		
	ECT SENSOR		○	○	○	○	○	○	○	○	○		○
	TP SENSOR		○		○	○	○	○	○		○		○
	MAP SENSOR		○	○	○	○	○	○	○		○		○
	CMP SENSOR	○	○			○					○		○
	CKP SENSOR	○	○	○	○	○	○	○	○		○		○
	KNOCK SENSOR					○					○		

ECM INPUT/OUTPUT CIRCUIT DIAGRAM

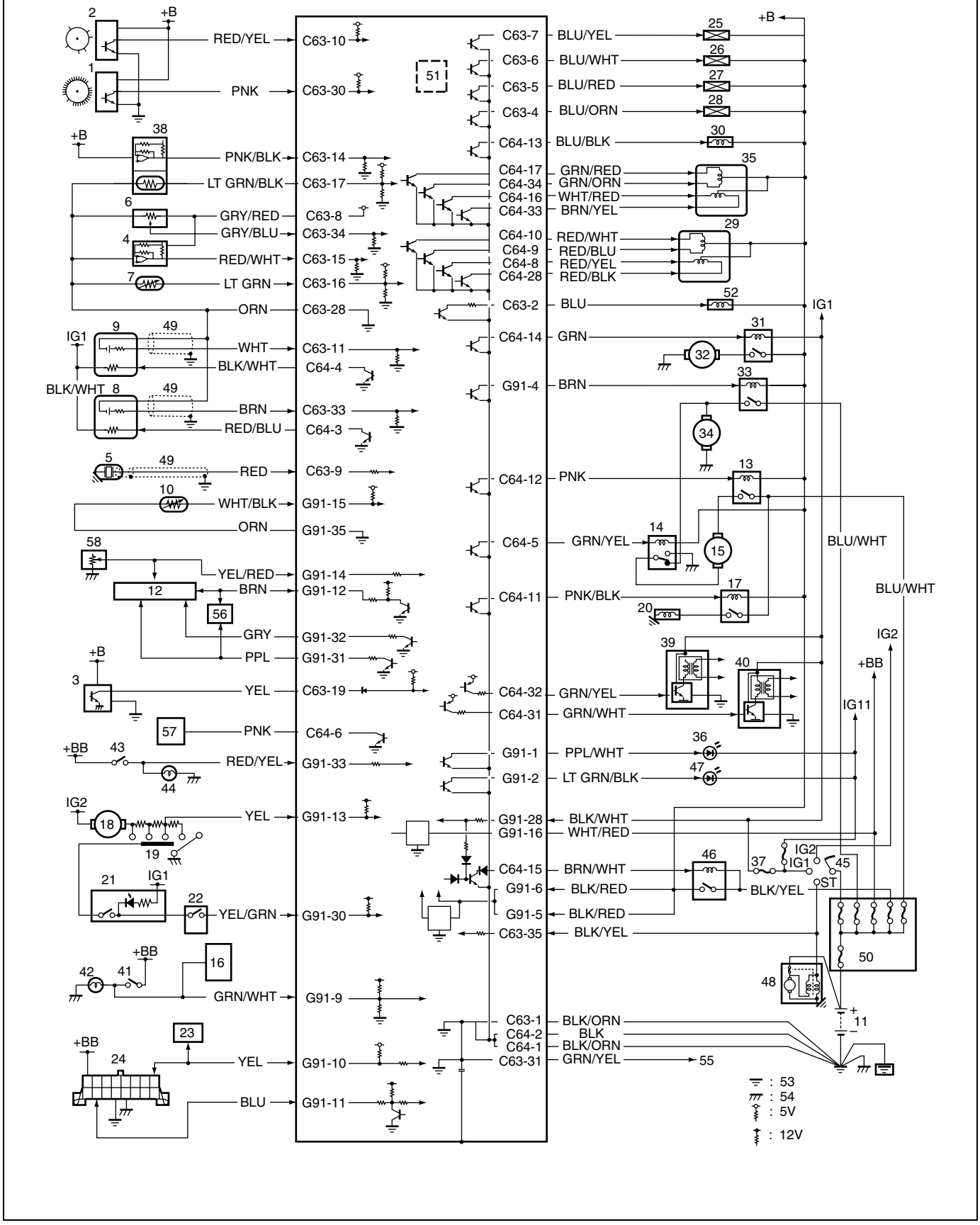

1. CKP sensor	21. A/C switch	41. Stop lamp switch
2. CMP sensor	22. A/C pressure switch	42. Stop lamp
3. VSS	23. Immobilizer control module	43. Lighting switch
4. MAP sensor	24. Data link connector	44. Position lamp
5. Knock sensor	25. Injector No.1	45. Ignition switch
6. TP sensor	26. Injector No.2	46. Main relay
7. ECT sensor	27. Injector No.3	47. Immobilizer indicator lamp
8. Heated oxygen sensor–2	28. Injector No.4	48. Starting motor
9. Heated oxygen sensor–1	29. IAC valve	49. Shield wire
10. A/C evaporator outlet air temp. sensor	30. EVAP canister purge valve	50. Main fuse
11. Battery	31. Fuel pump relay	51. Barometric pressure sensor
12. Combination meter	32. Fuel pump	52. Oil control valve
13. A/C condenser fan relay No.1	33. Radiator fan relay	53. Engine ground
14. A/C condenser fan relay No.2	34. Radiator fan motor	54. Body ground
15. A/C condenser fan motor	35. EGR valve	55. Shield ground
16. ABS control module	36. Malfunction indicator lamp	56. EPS control module
17. A/C compressor relay	37. “IG” fuse	57. Fuel cost meter in multi information display
18. Heater fan motor	38. MAF and IAT sensor	58. Fuel level sensor
19. Heater fan switch	39. Ignition coil assembly (for No.1 and No.4 spark plugs)	
20. A/C compressor clutch	40. Ignition coil assembly (for No.2 and No.3 spark plugs)	

ECM TERMINAL ARRANGEMENT TABLE

CON-NECTOR	TERMI-NAL	WIRE COLOR	CIRCUIT
C64	1	BLK/ORN	Ground for ECM
	2	BLK	Ground for ECM
	3	RED/BLU	Heater output of heated oxygen sensor–2
	4	BLK/WHT	Heater output of heated oxygen sensor–1
	5	GRN/YEL	A/C condenser fan motor relay No.2 output (if equipped)
	6	PNK	Fuel cost output
	7	–	–
	8	RED/YEL	IAC valve output (stepper motor coil 3)
	9	RED/BLU	IAC valve output (stepper motor coil 2)
	10	RED/WHT	IAC valve output (stepper motor coil 1)
	11	PNK/BLK	A/C compressor relay output (if equipped)
	12	PNK	A/C condenser fan motor relay No.1 output (if equipped)
	13	BLU/BLK	EVAP canister purge valve output
	14	GRN	Fuel pump relay output
	15	BRN/WHT	Main power supply relay output
	16	WHT/RED	EGR valve (stepper motor coil 3) output
	17	GRN/RED	EGR valve (stepper motor coil 1) output
	18	–	–
	19	–	–
	20	–	–
	21	–	–
	22	–	–
	23	–	–
	24	–	–
	25	–	–
	26	–	–
	27	–	–
	28	RED/BLK	IAC valve output (stepper motor coil 4)
	29	–	–
	30	–	–
	31	GRN/WHT	Ignition coil No.2 and No.3 output
	32	GRN/YEL	Ignition coil No.1 and No.4 output
	33	BRN/YEL	EGR valve (stepper motor coil 4) output
	34	GRN/ORN	EGR valve (stepper motor coil 2) output

CON-NECTOR	TERMI-NAL	WIRE COLOR	CIRCUIT
C63	1	BLK/ORN	Ground for ECM
	2	BLU	Oil control valve output
	3	–	–
	4	BLU/ORN	Fuel injector No.4 output
	5	BLU/RED	Fuel injector No.3 output
	6	BLU/WHT	Fuel injector No.2 output
	7	BLU/YEL	Fuel injector No.1 output
	8	GRY/RED	Output of 5V power source for throttle position (TP) sensor
	9	RED	Knock sensor signal
	10	RED/YEL	Reference signal for CMP sensor
	11	WHT	Oxygen signal of heated oxygen sensor–1
	12	–	–
	13	–	–
	14	PNK/BLK	Mass air flow (MAF) sensor signal
	15	RED/WHT	Manifold absolute pressure (MAP) sensor signal
	16	LT GRN	Engine coolant temp. (ECT) sensor signal
	17	LT GRN/BLK	Intake air temperature (IAT) sensor signal
	18	–	–
	19	YEL	Vehicle speed sensor signal
	20	–	–

CON-NECTOR	TERMI-NAL	WIRE COLOR	CIRCUIT
C63	21	–	–
	22	–	–
	23	–	–
	24	–	–
	25	–	–
	26	–	–
	27	–	–
	28	ORN	Ground for sensors
	29	–	–
	30	PNK	CKP sensor signal
	31	GRN/YEL	Ground of ECM for shield wire
	32	–	–
	33	BRN	Oxygen signal of heated oxygen sensor–2
	34	GRY/BLU	Throttle position (TP) sensor signal
	35	BLK/YEL	Starting motor signal

CON-NECTOR	TERMI-NAL	WIRE COLOR	CIRCUIT
G91	1	PPL/WHT	MIL (Malfunction indicator lamp) output
	2	LT GRN/BLK	Immobilizer indicator lamp output (if equipped)
	3	–	–
	4	BRN	Radiator fan motor relay output
	5	BLK/RED	Main power supply
	6	BLK/RED	Main power supply
	7	–	–
	8	–	–
	9	GRN/WHT	Electric load signal for stop lamp
	10	YEL	Serial communication line of data link connector 5 V
	11	BLU	Serial communication line of data link connector 12 V
	12	BRN	Engine revolution signal output for tachometer
	13	YEL	Electric load signal for heater blower motor
	14	YEL/RED	Fuel level sensor signal
	15	WHT/BLK	A/C evaporator outlet air temp. sensor signal (if equipped)
	16	WHT/RED	Power source for ECM internal memory
	17	–	–
	18	–	–
	19	–	–
	20	–	–
	21	–	–
	22	–	–
	23	–	–
	24	–	–
	25	–	–
	26	–	–
	27	–	–
	28	BLK/WHT	Ignition switch signal
	29	–	–
	30	YEL/GRN	A/C request signal (if equipped)
	31	PPL	Vehicle speed sensor signal for speedometer
	32	GRY	ECT sensor signal for combination meter
	33	RED/YEL	Electric load signal for clearance lamp
	34	–	–
	35	ORN	Ground for A/C evaporator outlet air temp. sensor (if equipped)

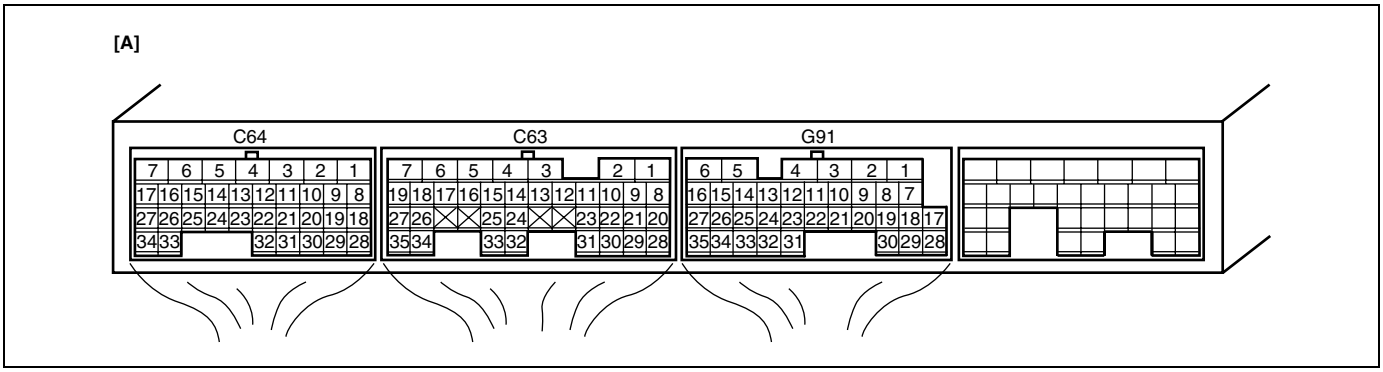

[A]: Terminal arrangement of ECM coupler (viewed from harness side)

NOTE:

For abbreviation of wire color, refer to "Abbreviations and Symbols May be Used in This Manual" in Section 0A.

On-Vehicle Service

Accelerator cable adjustment

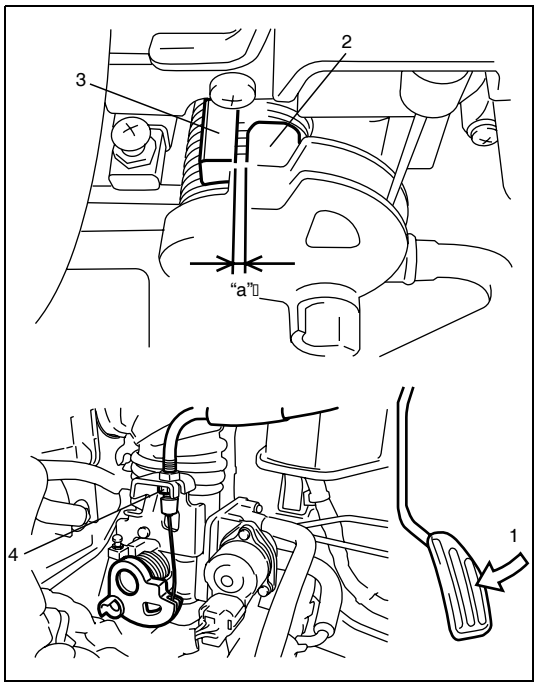

With accelerator pedal depressed fully (1), check clearance between throttle lever (2) and lever stopper (3) of throttle body. If measured value is out of specification, adjust it to specification with cable adjusting nut (4).

Accelerator cable adjustment clearance (with pedal depressed fully)
"a": 0.5 – 2.0 mm (0.02 – 0.07 in.)

Idle speed/idle air control (IAC) duty inspection

Before idle speed/IAC duty check, make sure of the following.

- Lead wires and hoses of Electronic Fuel Injection and engine emission control systems are connected securely.
- Accelerator cable has some play, that is, it is not tight.
- Valve lash is checked according to maintenance schedule.
- Ignition timing is within specification.
- All accessories (wipers, heater, lights, A/C, etc.) are out of service.
- Air cleaner has been properly installed and is in good condition.
- No abnormal air inhaling from air intake system.

After above items are all confirmed, check idle speed and IAC duty as follows.

NOTE:

Before starting engine, place transmission gear shift lever in "Neutral" (shift selector lever to "P" range for A/T vehicle), and set parking brake and block drive wheels.

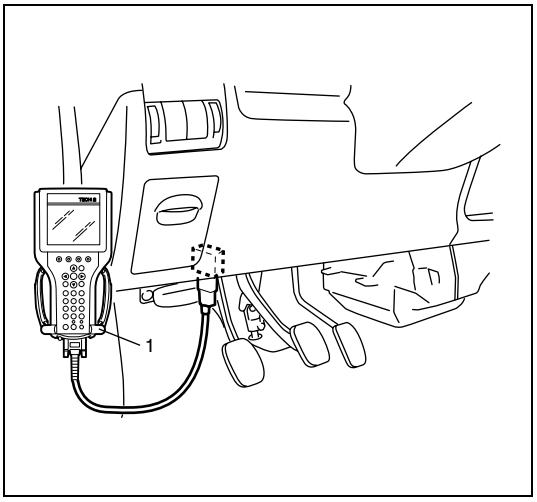

1) Connect scan tool (1) to DLC with ignition switch OFF.

2) Warm up engine to normal operating temperature.
3) Check engine idle speed and “IAC duty” by using “Data List” mode on scan tool to check “IAC duty”.
4) If duty and/or idle speed is out of specifications, inspect idle air control system referring to “Table B-4 Idle Air Control System Check” in Section 6.

Engine idle speed and IAC duty

A/C OFF	A/C ON
700 ± 50 r/min (rpm) **10 – 55 %**	**850 ± 50 r/min (rpm)**

5) Check that specified engine idle speed is obtained with A/C ON if vehicle is equipped with A/C.
   If not, check A/C request signal circuit and idle air control system.

Air Intake System

Throttle body Components

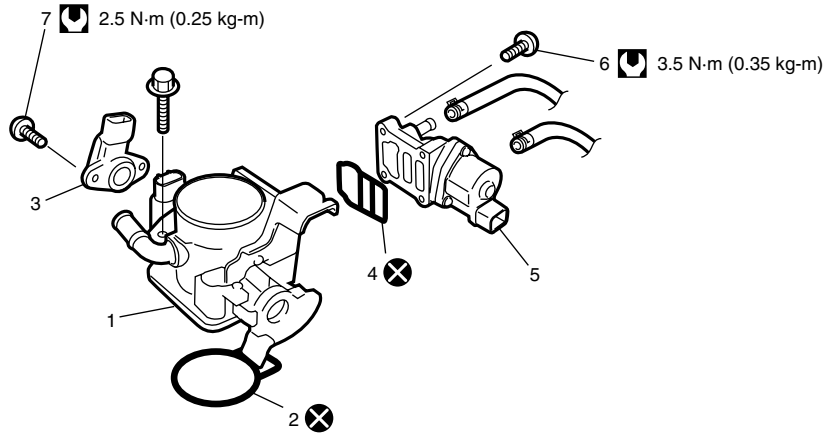

1. Throttle body	4. Gasket	7. TP sensor screws
2. Throttle body gasket	5. Idle air control valve	Tightening torque
3. TP sensor	6. IAC valve screws	Do not reuse.

Throttle body on-vehicle inspection

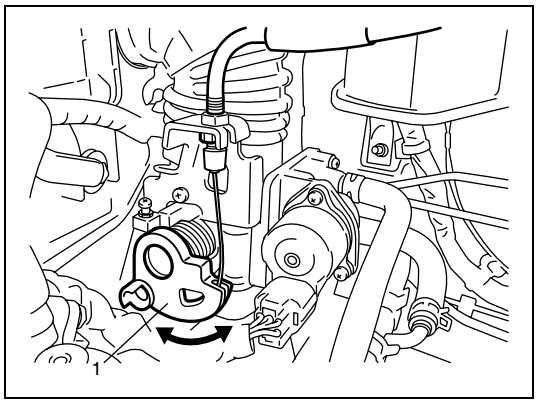

- Check that throttle valve lever (1) moves smoothly.

Throttle body removal and installation

REMOVAL

1) Disconnect negative cable at battery.
2) Drain coolant referring to “Cooling System Draining” in Section 6B.

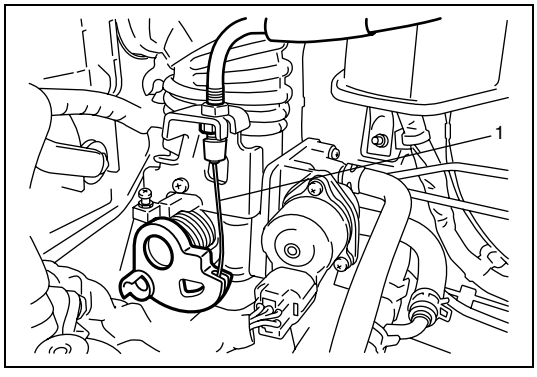

3) Disconnect accelerator cable (1) from throttle body.
4) Detach EVAP canister and purge valve chamber, and remove air cleaner outlet hose.

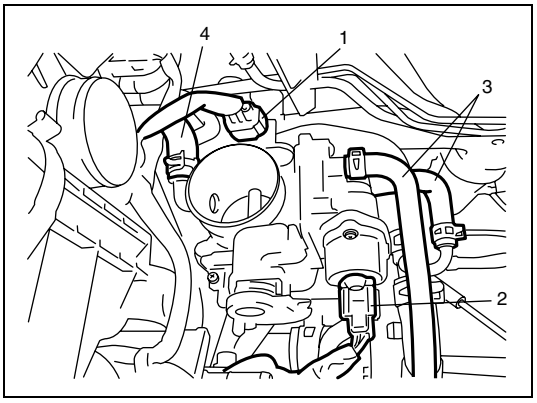

5) Disconnect connectors from TP sensor (1) and IAC valve (2).
6) Disconnect engine coolant hoses (3) and breather hose (4) from throttle body.
7) Remove throttle body from intake manifold.

8) Remove TP sensor and IAC valve from throttle body.

NOTE:

While disassembling and assembling throttle body, use special care not to deform levers on throttle valve shaft or cause damage to any other parts.

INSTALLATION

1) Install IAC valve to throttle body referring to “INSTALLATION” under “Idle air control (IAC) valve removal and installation” in this section.
2) Install TP sensor to throttle body referring to “INSTALLATION” under “Throttle position sensor (TP sensor) removal and installation” in this section.

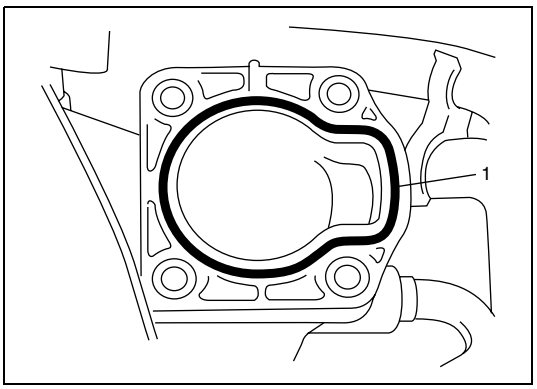

3) Clean mating surfaces and install new throttle body gasket (1) to intake manifold.

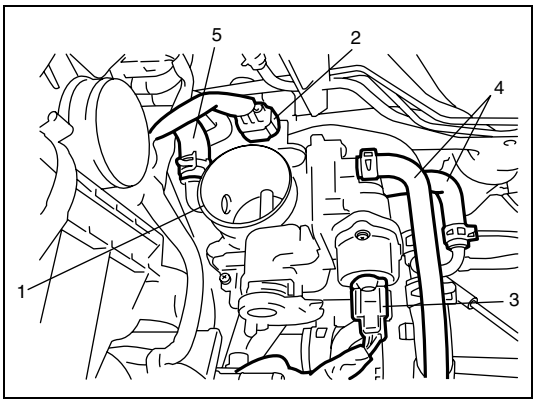

4) Install throttle body (1) to intake manifold.
5) Connect connectors to TP sensor (2) and IAC valve (3) securely.
6) Connect engine coolant hoses (4) and breather hose (5).
7) Connect accelerator cable and adjust cable play to specification.
8) Install air cleaner outlet hose, purge valve chamber and EVAP canister.
9) Refill coolant referring to “Cooling System Refill” in Section 6B.
10) Connect negative cable at battery.

Throttle body cleaning

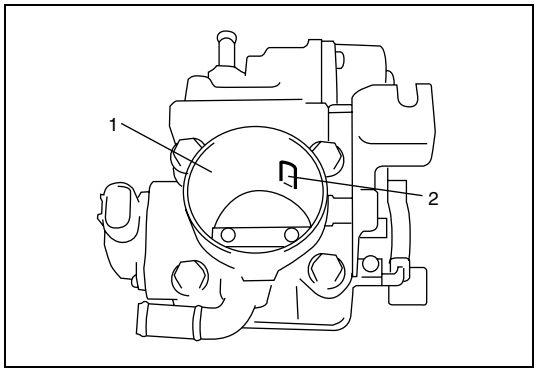

Clean throttle body bore (1) and idle air passage (2) by blowing compressed air.

NOTE:

TP sensor, idle air control valve or other components containing rubber must not be placed in a solvent or cleaner bath. A chemical reaction will cause these parts to swell, harden or get distorted.

Idle air control (IAC) valve removal and installation

REMOVAL

1) Detach EVAP canister.
2) Drain coolant referring to “Cooling System Draining” in Section 6B.
3) Disconnect coolant hoses from IAC valve.
4) Remove IAC valve from throttle body.

INSTALLATION

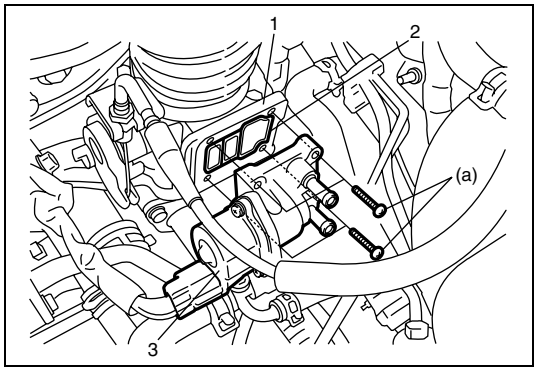

1) Install new gasket (2) to throttle body (1).
2) Install IAC valve (3) to throttle body (1).
   Tighten IAC valve screws to specified torque.

Tightening torque
IAC valve screw (a): 3.5 N·m (0.35 kg-m, 2.5 lb-ft)

3) Connect coolant hoses to IAC valve.
4) Refill coolant referring to “Cooling System Refill” in Section 6B.
5) Install EVAP canister.

Idle air control (IAC) valve inspection

Refer to “Idle air control (IAC) valve check” under “DTC P0506 Idle Air Control System RPM Lower than Expected DTC P0507 Idle Air Control System RRM Higher than Expected” in Section 6.

Oil control valve removal and installation

REMOVAL

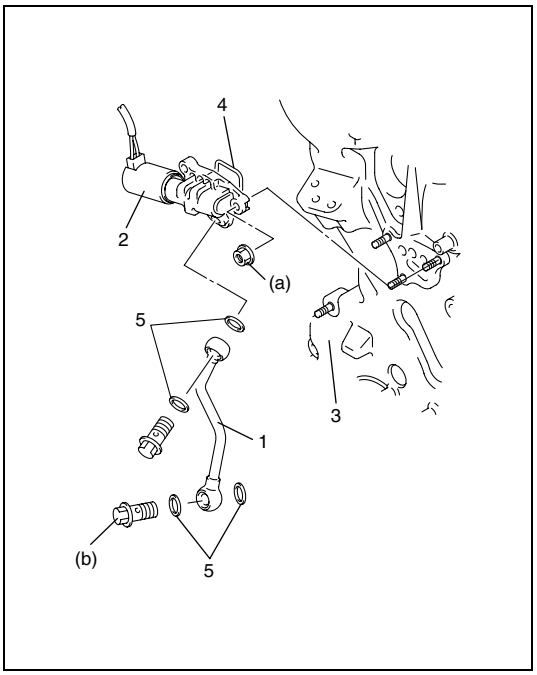

Remove oil gallery pipe No.1 (1) and oil control valve (2) from timing chain cover (3).

INSTALLATION

1) Install new O-ring (4) to oil control valve.
2) Install oil control valve to timing chain cover.
   Tighten nuts to specification.

Tightening torque
Oil control valve mounting nuts
(a): 11 N·m (1.1 kg-m, 8.0 lb-ft)

3) Install oil gallery pipe No.1 with new copper washers (5) to timing chain cover.
   Tighten bolts to specification.

Tightening torque
Oil gallery pipe No.1 bolts
(b): 30 N·m (3.0 kg-m, 21.5 lb-ft)

Oil control valve inspection

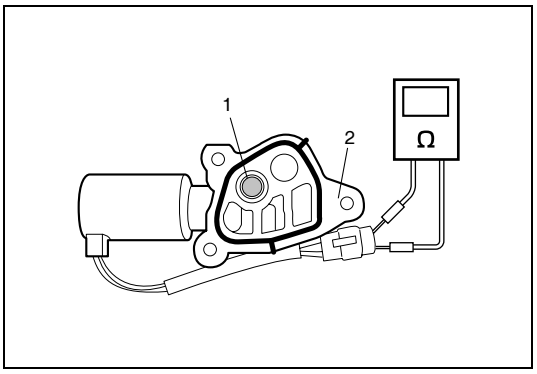

1) Inspect strainer (1) and mating surface (2) of oil control valve for clog or damage. Clean oil control valve if clog or foreign matter is present on strainer or mating surface of oil control valve.
   Replace oil control valve if its mating surface is damaged.
2) Check resistance between terminals of oil control valve.

Resistance: 6.7 – 7.7 Ω (at 20°C (68°F))

Fuel Delivery System

Fuel pressure inspection

WARNING:

Be sure to perform work in a well-ventilated area and away from any open flames, or there is a risk of a fire breaking out.

1) Relieve fuel pressure in fuel feed line referring to “Fuel pressure relief procedure” in Section 6.
2) Disconnect fuel feed hose from fuel delivery pipe.

CAUTION:

A small amount of fuel may be released when fuel hose is disconnected. Place container under the joint with a shop cloth so that released fuel is caught in container or absorbed in cloth. Place that cloth in an approved container.

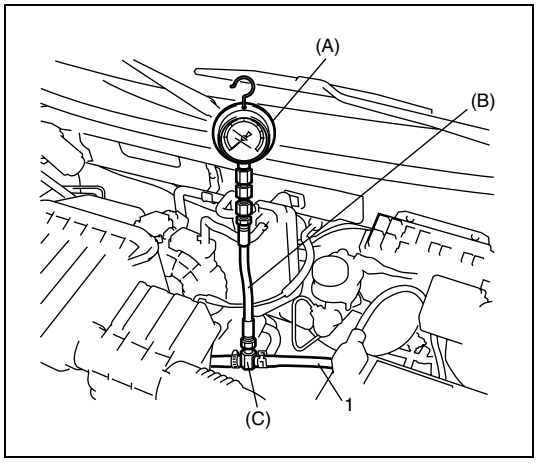

3) Connect special tools and hose between fuel delivery pipe and fuel feed hose (1) as shown in figure, and clamp hoses securely to ensure no leaks occur during checking.

Special tool
(A): 09912-58442
(B): 09912-58432
(C): 09912-58490

4) Check that battery voltage is above 11 V.

5) Turn ignition switch ON to operate fuel pump and after 2 seconds turn it OFF. Repeat this 3 or 4 times and then check fuel pressure.

Fuel pressure specification

CONDITION	FUEL PRESSURE
With fuel pump operating and engine stopped	**270 – 310 kPa (2.7 – 3.1 kg/cm^2, 38.4 – 44.0 psi)**
At specified idle speed	
With 1 min. after engine (fuel pump) stop (Pressure reduces as time passes)	**over 250 kPa (2.5 kg/cm^2, 35.6 psi)**

6) Start engine and warm it up to normal operating temperature.
7) Measure fuel pressure at idling.
   If measured pressure does not satisfy specification, refer to “Table B-3 Fuel Pressure Check” in Section 6 and check each possibly defective part. Replace if found defective.

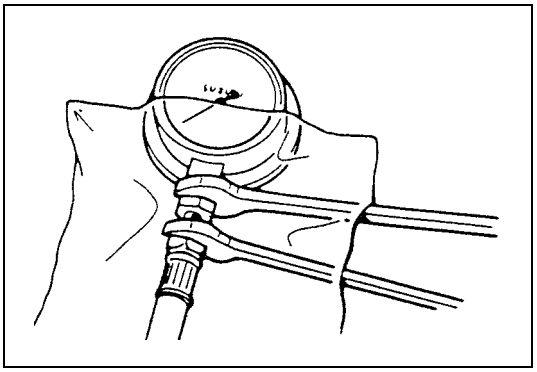

8) After checking fuel pressure, remove fuel pressure gauge.

CAUTION:

As fuel feed line is still under high fuel pressure, make sure to release fuel pressure according to following procedures.

- **Place fuel container under joint.**
- **Cover joint with rag and loosen joint nut slowly to release fuel pressure gradually.**

9) Remove special tools from fuel delivery pipe and fuel feed hose.
10) Connect fuel feed hose to fuel delivery pipe and clamp it securely.
11) With engine "OFF" and ignition switch "ON", check for fuel leaks.

Fuel pump with pressure regulator on-vehicle inspection

CAUTION:

When fuel filler cap is removed in any procedure, work must be done in a well-ventilated area, keep away from any open flames and without smoking.

NOTE:

The fuel pressure regulator is the one body with the fuel pump assembly so individual inspection of it is impossible.

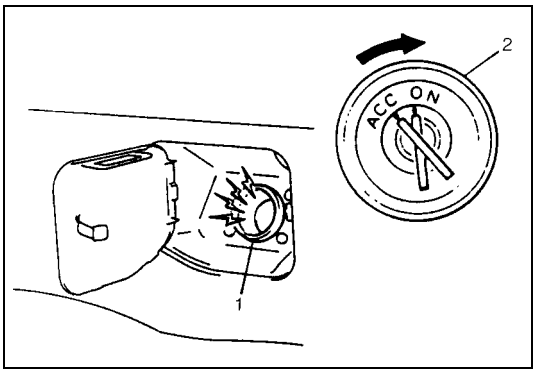

1) Remove filler cap and turn ON ignition switch. Then fuel pump operating sound should be heard from fuel filler for about 2 seconds and stop. Be sure to reinstall fuel filler cap after checking.
   If above check result is not satisfactory, advance to "Table B-2 Fuel Pump and Its Circuit Check" in Section 6.

1.	Fuel filler
2.	Ignition switch

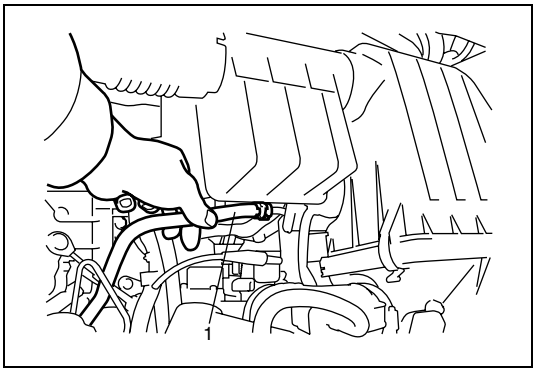

2) Turn OFF ignition switch and leave over 10 minutes as it is.
3) Fuel pressure should be felt at fuel feed hose (1) for about 2 seconds after ignition switch ON.
   If fuel pressure is not felt, advance to "Table B-3 Fuel Pressure Check" in Section 6.

Fuel pump with pressure regulator removal and installation

REMOVAL

Remove fuel tank from body according to procedure described in “Fuel Tank Removal and Installation” of Section 6C and remove fuel pump from fuel tank.

INSTALLATION

1) Install fuel pump to its bracket.
2) Install fuel pump to fuel tank and then install fuel tank to body according to procedure described in “Fuel Tank Removal and Installation” of Section 6C.

Fuel pump with pressure regulator inspection

Check fuel pump filter for evidence of dirt and contamination. If present, clean and check for presence of dirt in fuel tank.

Fuel injector on-vehicle inspection

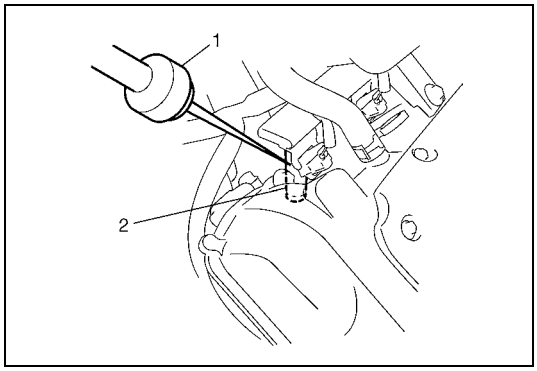

1) Using sound scope (1) or such, check operating sound of injector (2) when engine is running or cranking.
   Cycle of operating sound should vary according to engine speed.
   If no sound or an unusual sound is heard, check injector circuit (wire or connector) or injector (2).

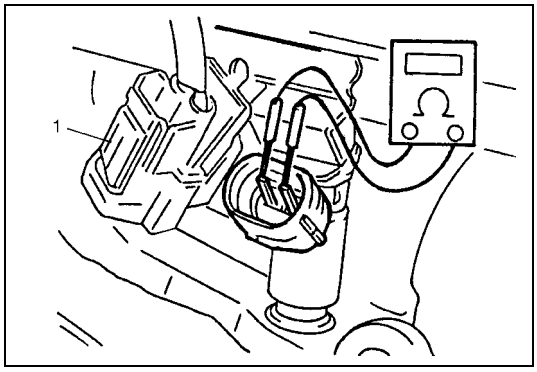

2) Disconnect connector (1) from injector, connect ohmmeter between terminals of injector and check resistance.
   If resistance is out of specification, replace.

   Resistance of fuel injector
   11.3 – 13.8 Ω at 20°C (68°F)

3) Connect connector (1) to injector securely.

Fuel injector removal and installation

REMOVAL

CAUTION:

A small amount of fuel may come out after removal of fuel injectors, cover them with shop cloth.

1) Relieve fuel pressure according to procedure described in “Fuel pressure relief procedure” of Section 6.
2) Disconnect battery negative cable at battery.
3) Disconnect MAF and IAT sensor connector, and detach EVAP canister purge valve.
4) Remove air cleaner assembly with air intake pipe.
5) Disconnect fuel injector couplers.

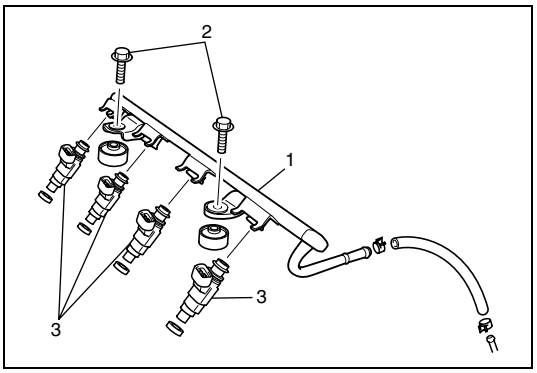

6) Disconnect fuel feed hose from fuel delivery pipe (1).
7) Remove fuel delivery pipe bolts (2).
8) Remove fuel injector(s) (3).

INSTALLATION

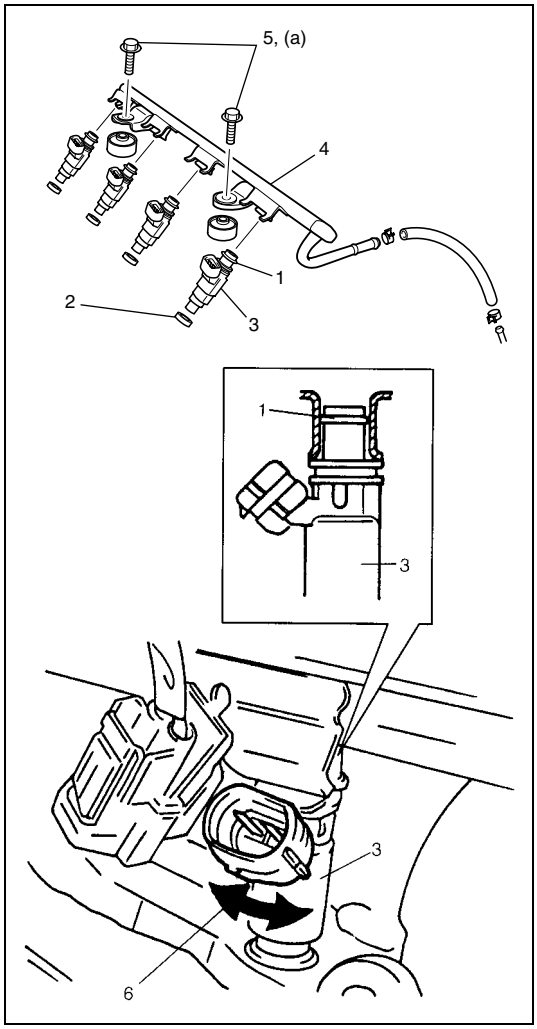

For installation, reverse removal procedure and note following precautions.

- Replace injector O-ring (1) with new one using care not to damage it.
- Check if cushion (2) is scored or damaged. If it is, replace with new one.
- Apply thin coat of fuel to O-rings (1) and then install injectors (3) into delivery pipe (4) and cylinder head.
  Make sure that injectors (3) rotate smoothly (6). If not, probable cause is incorrect installation of O-ring (1). Replace O-ring (1) with new one.
- Tighten delivery pipe bolts (5) and make sure that injectors (3) rotate smoothly (6).

Tightening torque
Delivery pipe bolts (a): 25 N·m (2.5 kg-m, 18.0 lb-ft)

- After installation, with engine “OFF” and ignition switch “ON”, check for fuel leaks around fuel line connection.

Fuel injector inspection

WARNING:
As fuel is injected in this inspection, perform in a well ventilated area and away from open flames.
Use special care to prevent sparking when connecting and disconnecting test lead to and from battery.

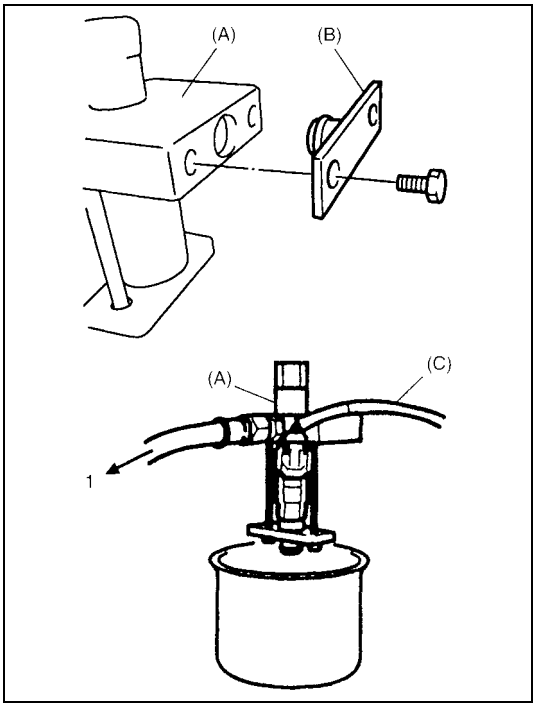

1) Install injector to special tool (injector checking tool).

Special tool
(A): 09912-58421
(B): 09912-57610

2) Connect special tools (hose and attachment) to fuel feed pipe (1) of vehicle.
3) Connect special tool (test lead) to injector.

Special tool
(C): 09930-88530

4) Install suitable vinyl tube onto injector nozzle to prevent fuel from splashing out when injecting.
5) Put graduated cylinder under injector.

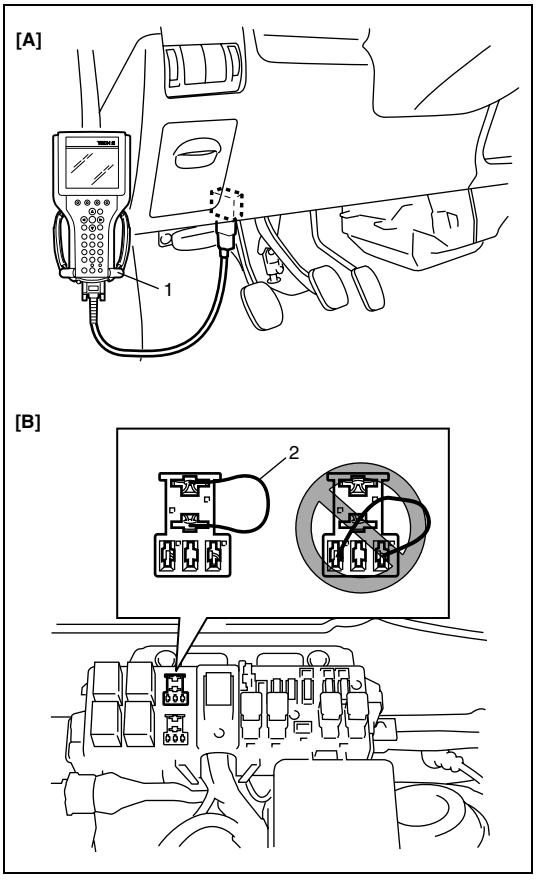

6) Operate fuel pump and apply fuel pressure to injector as follows:
   a) When using scan tool:
      i) Connect scan tool (1) to DLC with ignition switch OFF.
      ii) Turn ignition switch ON, clear DTC and select “MISC TEST” mode on scan tool.
      iii) Turn fuel pump ON by using scan tool.
   b) Without using scan tool:
      i) Remove fuel pump relay from connector.
      ii) Connect two terminals of relay connector using service wire (2) as shown in figure.

CAUTION:
Check to make sure that connection is made between correct terminals. Wrong connection can cause damage to ECM, wire harness, etc.

      iii) Turn ignition switch ON.

[A]: When using Suzuki Scan Tool
[B]: When not using Suzuki Scan Tool

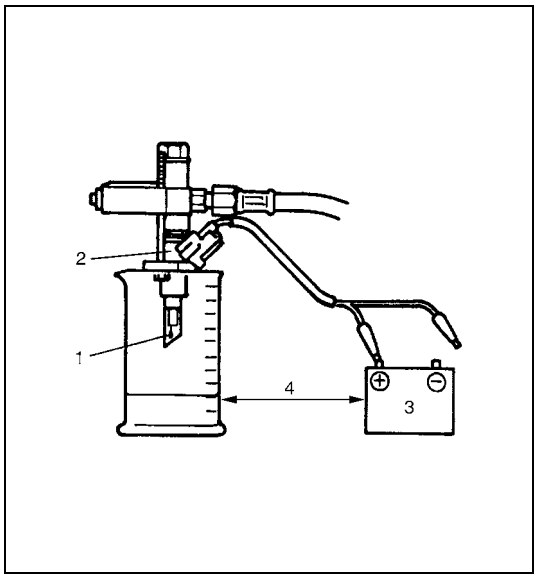

7) Apply battery voltage (3) to injector (2) for 15 seconds and measure injected fuel volume with graduated cylinder.
   Test each injector two or three times.
   If not within specification, replace injector.

Injected fuel volume
43 – 47 cc/15 sec. (1.45/1.51 – 1.58/ 1.65 US/Imp. oz/15 sec.)

8) Check fuel leakage from injector nozzle. Do not operate injector for this check (but fuel pump should be at work).
   If fuel leaks (1) more than following specifications, replace.

Fuel leakage
Less than 1 drop/min.

4. Keep as far apart as possible

Electronic Control System

Engine control module (ECM) removal and installation

CAUTION:
As ECM consists of precision parts, be careful not to expose it to excessive shock.

REMOVAL

1) Disconnect battery negative cable at battery.
2) Disable air bag system, referring to “Disabling air bag system” in Section 10B if equipped.
3) Disconnect ECM connectors (1).
4) Remove ECM (2) by removing nuts.

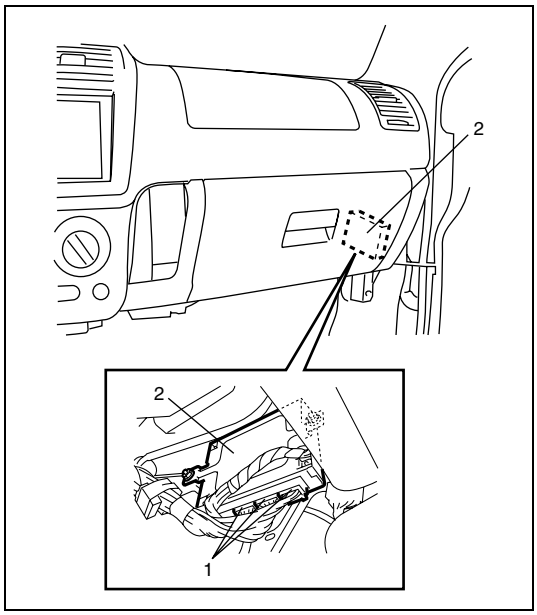

INSTALLATION

Reverse removal procedure noting the following:

- Connect connectors to ECM securely.

Manifold absolute pressure sensor (MAP sensor) inspection

Check MAP sensor referring to “MAP Sensor Individual Check” under “DTC P0108 Manifold Absolute Pressure High Input” in Section 6. If malfunction is found, replace.

Throttle position sensor (TP sensor) on-vehicle inspection

1) Disconnect negative cable at battery.
2) Detach EVAP canister and purge valve chamber, and remove air cleaner outlet hose.
3) Disconnect TP sensor connector.
4) Using ohmmeter, check resistance between terminals under each condition given in table below.
   If check result is not satisfactory, replace TP sensor.

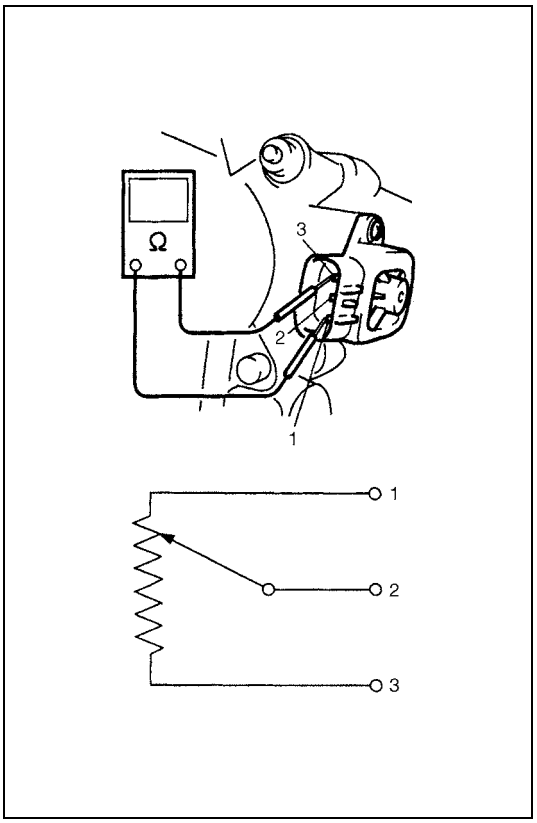

TP sensor resistance

TERMINALS	RESISTANCE
Between 1 and 3 terminals	**4.0 – 6.0 kΩ**
Between 2 and 3 terminals	**20 Ω – 6.0 kΩ, varying according to throttle valve opening.**

NOTE:

There should be more than 2 kΩ resistance difference between when throttle valve is at idle position and when it is fully open.

5) Connect TP sensor connector securely.
6) Connect negative cable to battery.

1. Reference voltage terminal
2. Output voltage terminal
3. Ground terminal

Throttle position sensor (TP sensor) removal and installation

REMOVAL

1) Disconnect battery negative cable at battery.
2) Detach EVAP canister and purge valve chamber, and remove air cleaner outlet hose.
3) Disconnect TP sensor connector and remove TP sensor from throttle body.

INSTALLATION

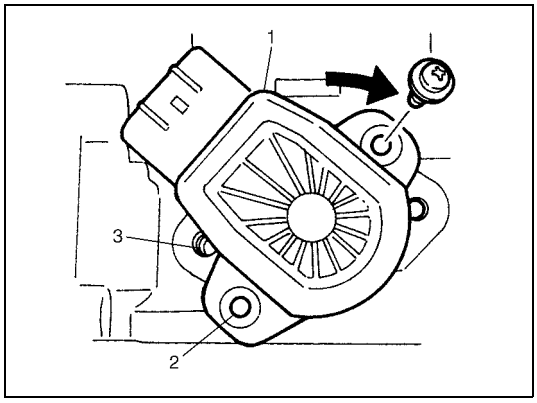

1) Install TP sensor (1) to throttle body.
   Fit TP sensor to throttle body in such way that its holes (3) are a little away from TP sensor screw holes (2) as shown in figure and turn TP sensor clockwise so that those holes align.

Tightening torque
TP sensor screw (a): 2.5 N·m (0.25 kg-m, 1.8 lb-ft)

2) Connect connector to TP sensor securely.
3) Connect battery negative cable to battery.

Engine coolant temperature sensor (ECT sensor) removal and installation

REMOVAL

1) Disconnect battery negative cable at battery.
2) Drain coolant referring to “Cooling System Draining” in Section 6B.

WARNING:
To help avoid danger of being burned, do not remove radiator cap while engine and radiator are still hot. Scalding fluid and steam can be blown out under pressure if cap is taken off too soon.

3) Remove air intake pipe.
4) Disconnect connector from ECT sensor.

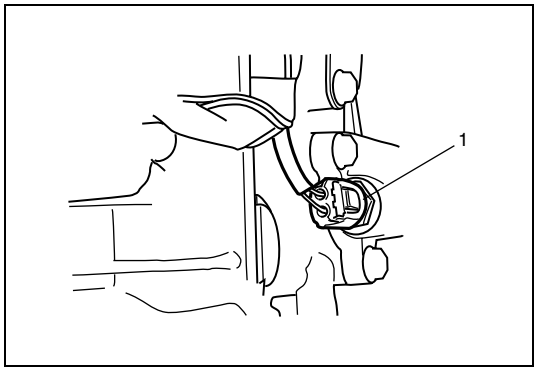

5) Remove ECT sensor (1) from thermostat case.

INSTALLATION

Reverse removal procedure noting the following:

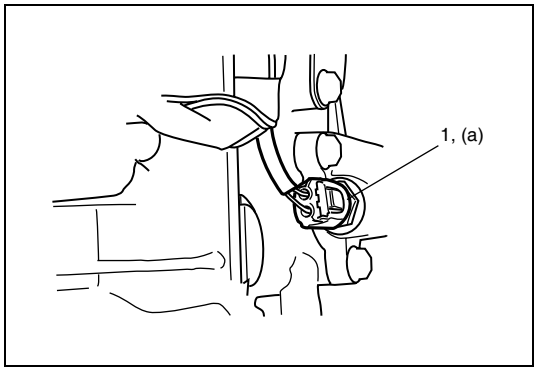

- Clean mating surfaces of ECT sensor (1) and thermostat case.
- Check O-ring for damage and replace if necessary.
- Tighten ECT sensor (1) to specified torque.

Tightening torque
ECT sensor (a): 15 N·m (1.5 kg-m, 11.5 lb-ft)

- Connect connector to ECT sensor (1) securely.
- Refill coolant referring to “Cooling System Refill” in Section 6B.

Engine coolant temperature sensor (ECT sensor) inspection

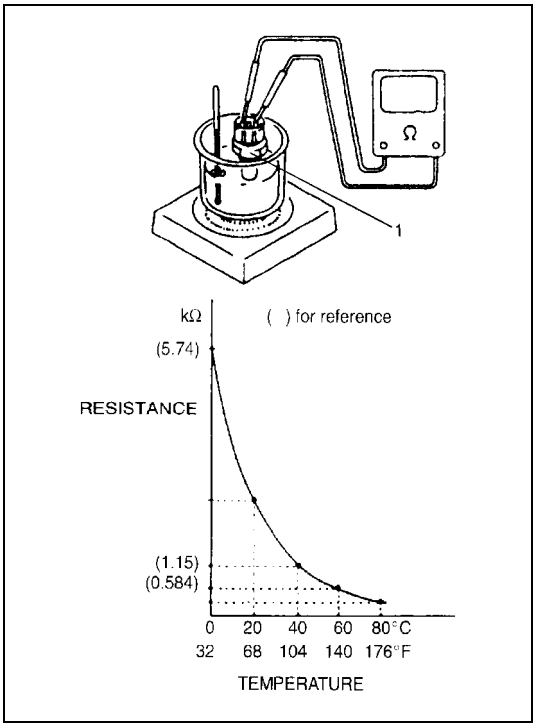

Immerse temperature sensing part of ECT sensor (1) in water (or ice) and measure resistance between terminal “A” and “B” while heating water gradually.
If measured resistance does not show such characteristic as shown in the graph, replace ECT sensor (1).

Heated oxygen sensor (HO2S-1 and HO2S-2) heater on-vehicle inspection

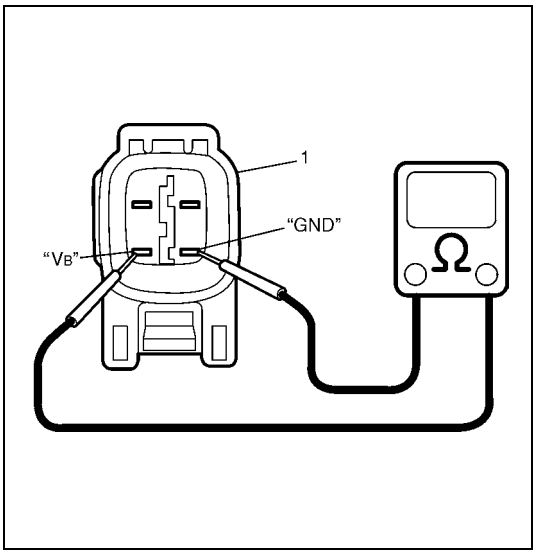

1) Disconnect sensor connector.
2) Using ohmmeter, measure resistance between terminals “V_B” and “GND” of sensor connector.
   If found faulty, replace oxygen sensor.

NOTE:

Temperature of sensor affects resistance value largely. Make sure that sensor heater is at correct temperature.

Resistance of oxygen sensor heater
HO2S–1: 5.0 – 6.4 Ω at 20°C (68°F)
HO2S–2: 11.7 – 14.3 Ω at 20°C (68°F)

3) Connect sensor connector securely.

1. Viewed from terminal side

Heated oxygen sensor (HO2S-1 and HO2S-2) removal and installation

REMOVAL

WARNING:
To avoid danger of being burned, do not touch exhaust system when system is hot. Oxygen sensor removal should be performed when system is cool.

1) Disconnect negative cable at battery.
2) For HO2S–1, disconnect connector of heated oxygen sensor and release its wire harness from clamps.
   a) For vehicle not equipped with A/C, remove front bumper and engine front cover.
   b) For vehicle equipped with A/C, remove exhaust manifold referring to “Exhaust Manifold Removal and Installation” in Section 6A1.
3) For HO2S–2, disconnect connector of heated oxygen sensor and release its wire harness from clamp and hoist vehicle.
4) Remove heated oxygen sensor (1) from exhaust manifold or exhaust pipe.

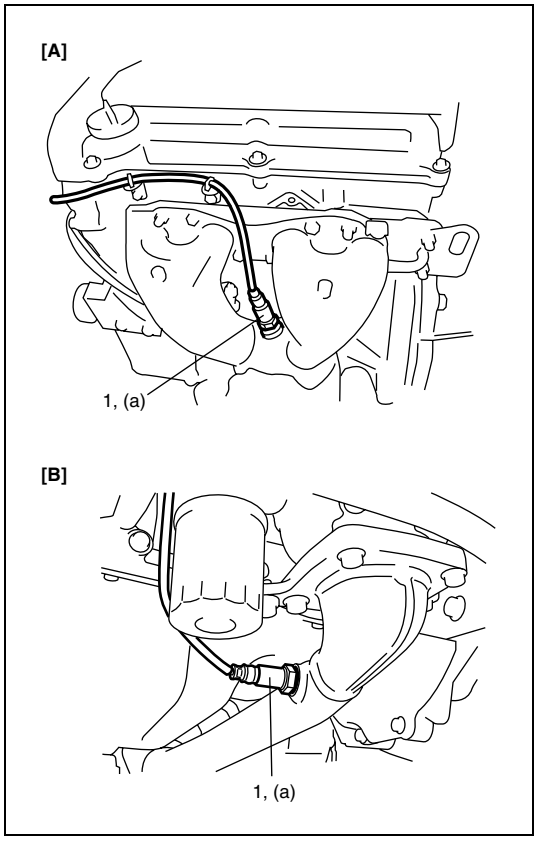

[A]: HO2S–1
[B]: HO2S–2

INSTALLATION

Reverse removal procedure noting the following.

- Tighten heated oxygen sensor (1) to specified torque.

Tightening torque
Heated oxygen sensor (a): 45 N·m (4.5 kg-m, 32.5 lb-ft)

- For equipped with A/C, install exhaust manifold referring to “Exhaust Manifold Removal and Installation” in Section 6A1.
- Connect connector of heated oxygen sensor (1) and clamp wire harness securely.
- After installing heated oxygen sensor (1), start engine and check that no exhaust gas leakage exists.

Camshaft position sensor (CMP sensor) inspection

Check camshaft position sensor referring to “DTC P0340 Camshaft Position Sensor Circuit” in Section 6. If malfunction is found, replace.

Camshaft position sensor (CMP sensor) removal and installation

REMOVAL

1) Disconnect negative cable at battery.
2) Disconnect connector from camshaft position sensor.
3) Remove camshaft position sensor from cylinder head.

INSTALLATION

1) Check that O-ring is free from damage.
2) Check that camshaft position sensor and signal rotor teeth are free from any metal particles and damage.

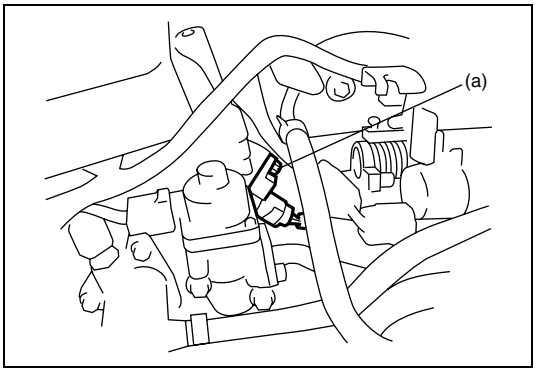

3) Install camshaft position sensor to cylinder head.

Tightening torque
Camshaft position sensor bolt
(a): 10 N·m (1.0 kg-m, 7.5 lb-ft)

4) Connect connector to it securely.
5) Connect negative cable to battery.

Crankshaft position sensor (CKP sensor) inspection

Check crankshaft position sensor referring to Steps 2 and 7 of "DTC P0335 Crankshaft Position (CKP) Sensor Circuit" in Section 6. If malfunction is found, replace.

Crankshaft position sensor (CKP sensor) removal and installation

REMOVAL

1) Disconnect negative cable at battery.

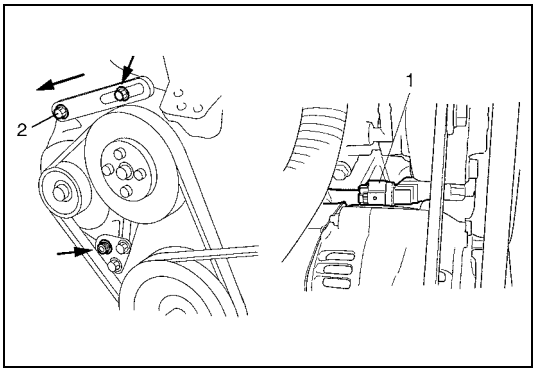

2) Remove generator drive belt, loosen pivot bolt (2) and move generator rearward.
3) Disconnect connector from crankshaft position sensor.
4) Remove crankshaft position sensor (1) from cylinder block.

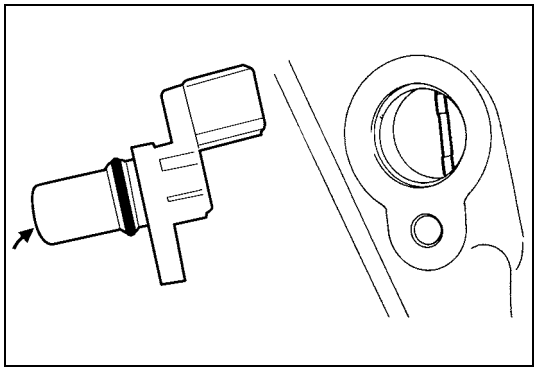

INSTALLATION

1) Check to make sure that crankshaft position sensor and pulley teeth are free from any metal particles and damage.
2) Install crankshaft position sensor to cylinder block.
3) Connect connector to it securely.
4) Adjust generator belt tension, refer to “Water Pump/Generator Drive Belt Tension Inspection and Adjustment” in Section 6B.
5) Connect negative cable to battery.

Fuel Level Sensor Removal and Installation

Refer to “Fuel Pump Assembly Removal and Installation” in Section 6C.

Fuel Level Sensor Inspection

Refer to “Fuel Level Sensor (Gauge Unit) Inspection” in Section 8.

Vehicle speed sensor (VSS) inspection

Check vehicle speed sensor referring to “DTC P0500 Vehicle Speed Sensor (VSS) Malfunction” in Section 6. If malfunction is found, replace.

Vehicle speed sensor (VSS) removal and installation

Refer to “Vehicle Speed Sensor (VSS) Removal and Installation” in Section 7A.

Knock sensor inspection

Check knock sensor referring to “DTC P0327 Knock Sensor Circuit Low DTC P0328 Knock Sensor Circuit High” in Section 6. If malfunction is found, replace.

Knock sensor removal and installation

REMOVAL

1) Disconnect negative cable from battery.
2) Hoist vehicle.

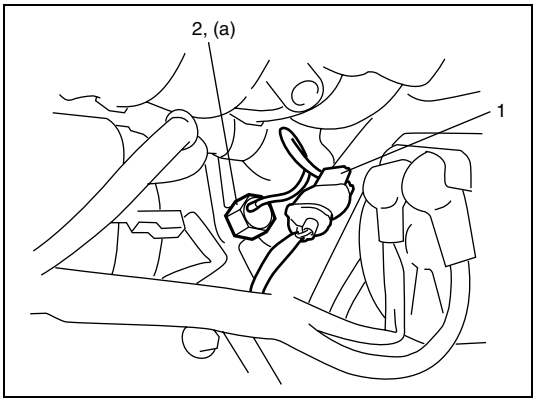

3) Disconnect knock sensor connector (1).
4) Remove knock sensor (2) from cylinder block.

INSTALLATION

Reverse removal procedure for installation.

Tightening torque
Knock sensor (a): 22 N·m (2.2 kg-m, 16.0 lb-ft)

Main relay, fuel pump relay and radiator fan relay inspection

1) Disconnect negative cable at battery.

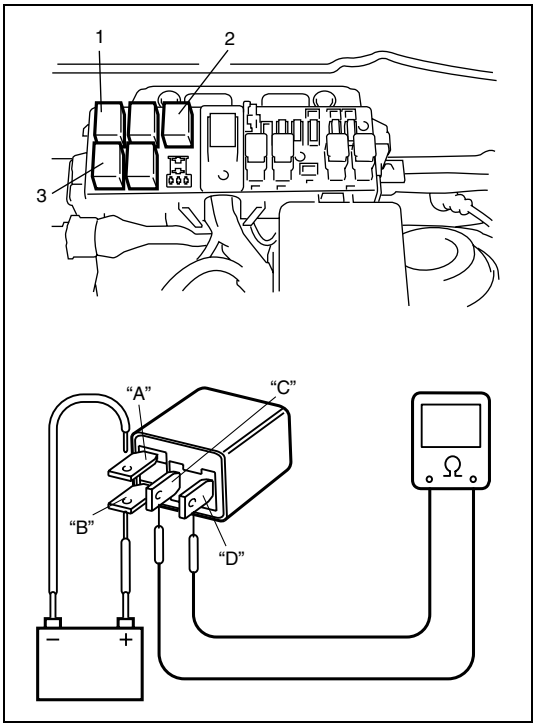

2) Remove main relay (1), fuel pump relay (2) and radiator fan relay (3) from relay/fuse box.
3) Check that there is no continuity between terminal "C" and "D". If there is continuity, replace relay.
4) Connect battery positive (+) terminal to terminal "B" of relay.
   Connect battery negative (–) terminal "A" of relay.
   Check continuity between terminal "C" and "D".
   If there is no continuity when relay is connected to the battery, replace relay.

Fuel cut operation inspection

NOTE:

Before inspection, check to make sure that gear shift lever is in neutral position (with A/T model, selector lever in "P" range), A/C is OFF and that parking brake lever is pulled all the way up.

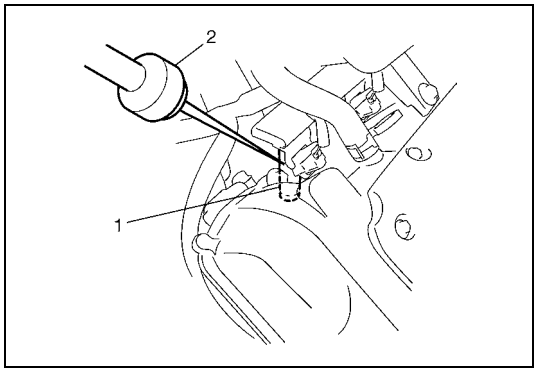

1) Warm up engine to normal operating temperature.
2) While listening to sound of injector (1) by using sound scope (2) or such, increase engine speed to higher than 3,000 r/min.
3) Check to make sure that sound to indicate operation of injector stops when throttle valve is closed instantly and it is heard again when engine speed is reduced to less than about 2,000 r/min.

Radiator fan control system inspection

SYSTEM INSPECTION

WARNING:

Keep hands, tools, and clothing away from engine cooling fan to help prevent personal injury. This fan is electric and can come on whether or not the engine is running. The fan can start automatically in response to the ECT sensor with the ignition switch in the "ON" position.

Check system for operation referring to "Table B-7 Radiator Fan Control System Check" in Section 6.

If radiator fan fails to operate properly, check relay, radiator fan and electrical circuit.

Mass air flow (MAF) and intake air temperature (IAT) sensor on-vehicle inspection

1) Remove ECM referring to "Engine control module (ECM) removal and installation" in this section.
2) Connect couplers to ECM.
3) Disconnect MAF and IAT sensor connector.

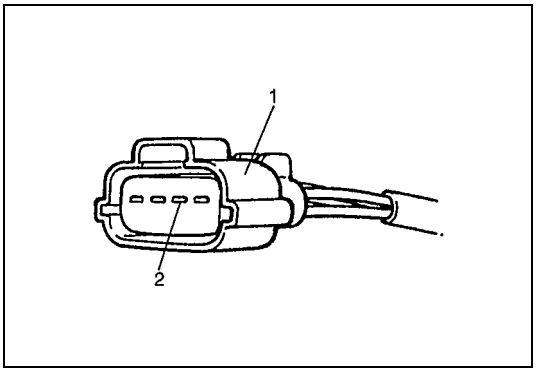

4) Connect voltmeter to “BLK/RED” wire terminal (2) of MAF and IAT sensor coupler (1) disconnected and ground.
5) Turn ignition switch ON and check that voltage is battery voltage.
   If not, check if wire harness is open or connection is poor.

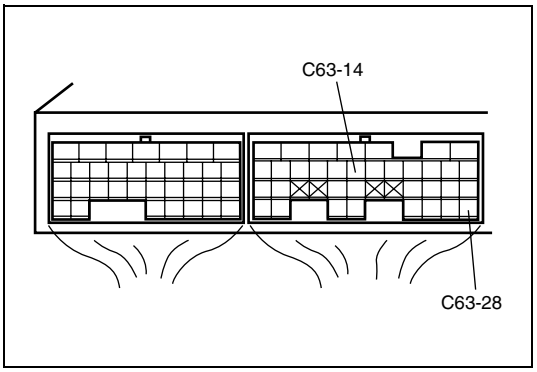

6) Turn ignition switch OFF and connect coupler to MAF and IAT sensor.
7) Turn ignition switch ON and check MAF signal voltage between “C63-14” terminal and “C63-28” terminal of ECM coupler.

MAF signal voltage of MAF and IAT sensor at ignition switch ON: 0.5 – 1.0 V

1. ECM

8) Start engine and check that voltage is lower than 5 V and it rises as engine speed increases.

MAF signal reference voltage of MAF and IAT sensor at specified Idle speed: 1.3 – 1.8 V

9) If check result is not as specified above, cause may lie in wire harness, coupler connection, MAF and IAT sensor or ECM.

Mass air flow (MAF) and intake air temperature (IAT) sensor removal and installation

REMOVAL

1) Disconnect negative cable at battery.

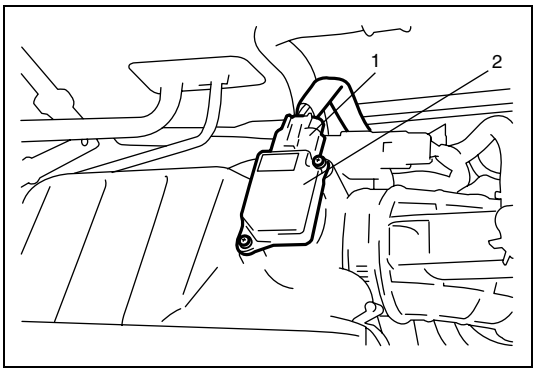

2) Disconnect MAF and IAT sensor coupler (1).
3) Remove MAF and IAT sensor (2) from air cleaner assembly.

INSTALLATION

Reverse removal procedure noting the followings.

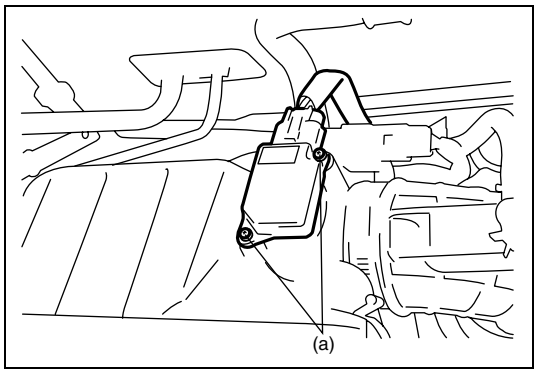

- Tighten MAF and IAT sensor screws to specified torque.

Tightening torque
MAF sensor screw (a): 2.5 N·m (0.25 kg-m, 1.8 lb-ft)

- Connect MAF and IAT sensor coupler securely.

Mass air flow (MAF) and intake air temperature (IAT) sensor inspection

CAUTION:
Do not heat up the MAF and IAT sensor more than 100°C (212°F). Otherwise, the MAF and IAT sensor is damaged.

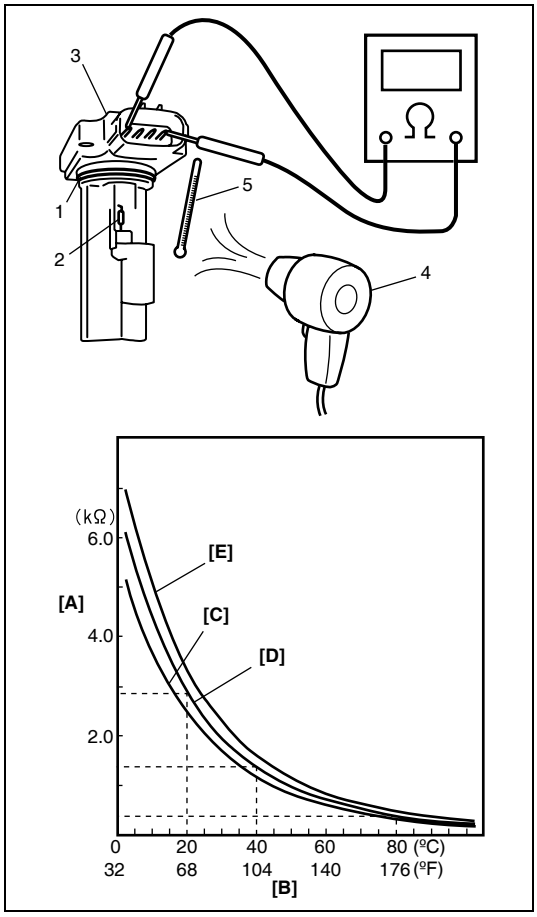

- Check sensor O-ring (1) for damage and deterioration. Replace as necessary.
- Blow hot air to temperature sensing part (2) of MAF and IAT sensor (3) using hot air drier (4) and measure resistance between sensor terminals while heating air gradually.
  If measured resistance does not show such characteristic as shown, replace MAF and IAT sensor.

Intake air temperature sensor resistance

Temperature	Resistance
20°C (68°F)	2.33 – 2.97 kΩ
40°C (104°F)	1.08 – 1.47 kΩ
80°C (176°F)	0.309 – 0.432 kΩ

[A]:	Resistance
[B]:	Temperature
[C]:	Lower limit
[D]:	Nominal
[E]:	Upper limit
5.	Temperature gauge

Emission Control System

EGR system inspection

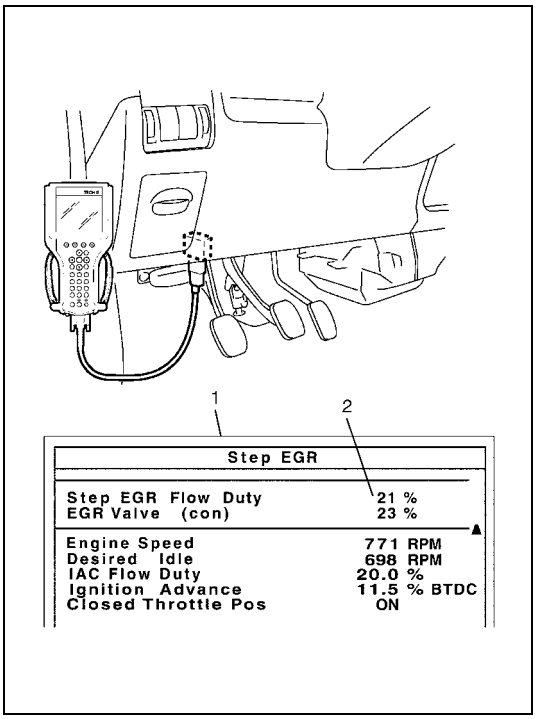

1) Connect Suzuki Scan Tool to data link connector (DLC) with ignition switch turn OFF.
2) Turn ON ignition switch and erase DTC using “CLEAR DTC” in “TROUBLU CODES” menu.
3) Start engine and warm up it to normal operating temperature then select “DTATA LIST” mode on scan tool.
4) Make sure that vehicle condition is as following.
   - Vehicle speed = 0 km/h (0 KPH)
   - Engine speed ≤ 900 rpm
   - Engine coolant temp. ≥ 90°C, 164°F
5) With engine idling (without depressing accelerator pedal), open EGR valve using “STEP EGR” mode in “MISC. TEST” menu.
   In this state, according as EGR valve opening increases engine idle speed drops. If not, possible cause is clogged EGR gas passage, stuck or faulty EGR valve.

1. Suzuki Scan Tool display
2. EGR valve opening (0: Close, 100: Full Open)

EGR valve removal and installation

REMOVAL

1) Disconnect negative cable at battery.
2) Remove air intake pipe.
3) Remove EGR pipe.
4) Disconnect EGR valve connector.
5) Remove EGR valve and gasket from cylinder head.

INSTALLATION

Reverse removal procedure noting following.

- Clean mating surface of valve and cylinder head.
- Use new gaskets.

EGR valve inspection

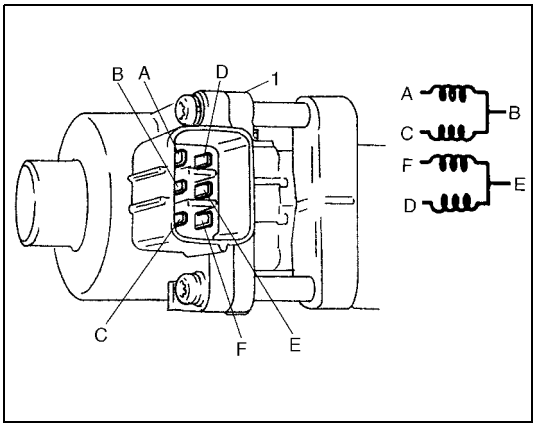

1) Check resistance between following terminals of EGR valve (1) in each pair.
   If found faulty, replace EGR valve assembly.

EGR valve resistance

Terminal	Standard resistance
A – B **C – B** **F – E** **D – E**	**20 – 24 Ω**

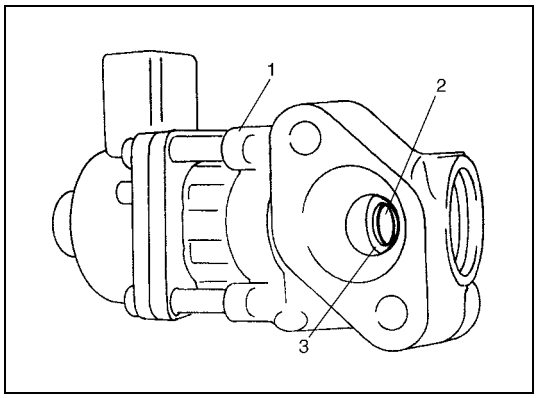

2) Remove carbon from EGR valve gas passage.

NOTE:

Do not use any sharp–edged tool to remove carbon.
Be careful not to damage or bend EGR valve (1), valve seat (3) and rod.

3) Inspect valve (2), valve seat and rod for fault, cracks, bend or other damage.
   If found faulty, replace EGR valve assembly.

Evaporative emission control system inspection

EVAP CANISTER PURGE

NOTE:

Before inspection, check to make sure that gear shift lever is in neutral position (with A/T model, selector lever in "P" range) and that parking brake lever is pulled all the way up.

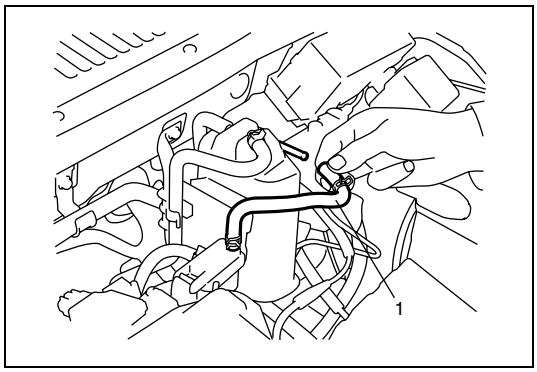

1) Disconnect purge hose (1) from EVAP canister.
2) Place finger against the end of disconnected hose and check that vacuum is not felt there when engine is cool and running at idle speed.
   If check result is not satisfactory, check EVAP canister purge valve, wire harness and ECM.

EVAP CANISTER PURGE VALVE and ITS CIRCUIT

1) Prepare to operate EVAP canister purge valve as follows.
   a) When using Suzuki Scan Tool:

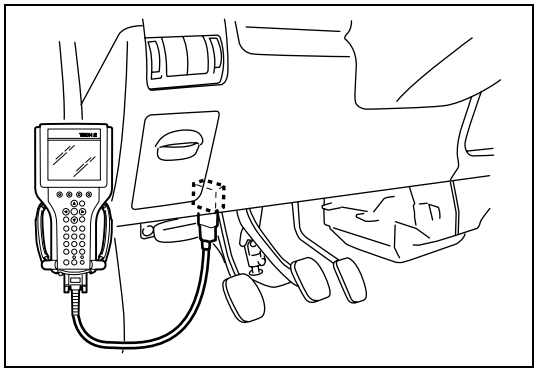

      i) Connect Suzuki Scan Tool to DLC with ignition switch OFF and disconnect purge valve vacuum hoses from intake manifold and purge valve chamber.
      ii) Turn ON ignition switch, clear DTC and select "MISC TEST" mode on Suzuki Scan Tool.

   b) When not using Suzuki Scan Tool:
      i) Disconnect purge valve vacuum hoses from intake manifold and purge valve chamber.

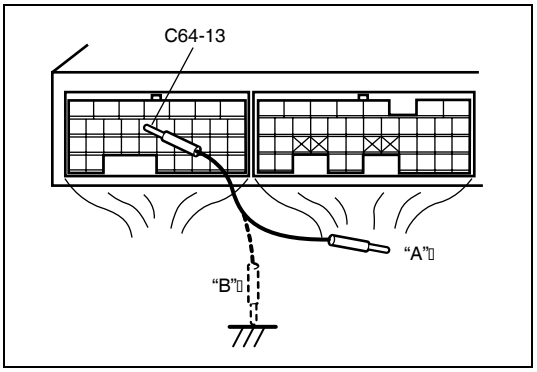

ii) Turn ON ignition switch.
Using service wire, ground C64-13 terminal of ECM connector (valve ON) "B" and unground it (valve OFF) "A".

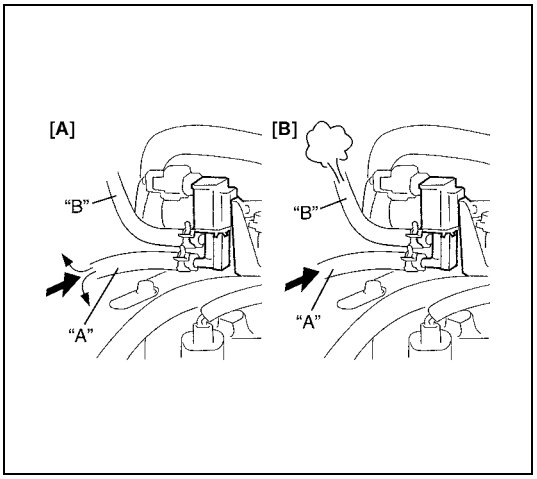

2) Check purge valve for operation and vacuum passage for clog when valve is switched ON and OFF by using Suzuki Scan Tool or service wire.
If check result is not described, check vacuum hoses, EVAP canister purge valve, wire harness and connections.

EVAP canister purge valve specification
[A] Valve OFF:
When blowing into hose "A", air should not come out of hose "B".
[B] Valve ON:
When blowing into hose "A", air should come out of hose "B".

VACUUM PASSAGE

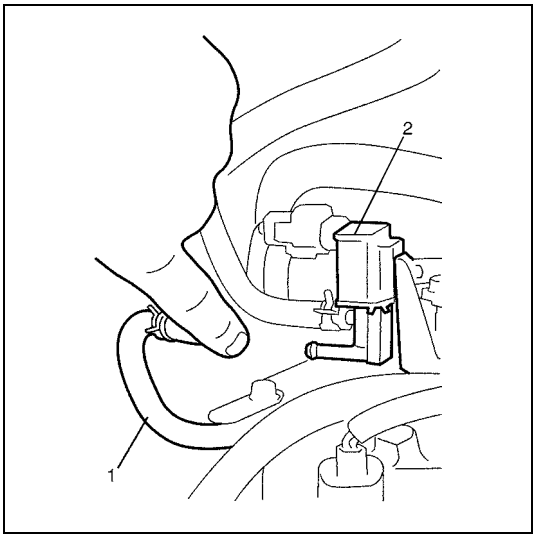

Start engine and run it at idle speed. Disconnect vacuum hose (1) from EVAP canister purge valve (2). With finger placed against hose disconnected, check that vacuum is applied.
If it is not applied, clean vacuum passage by blowing compressed air.

VACUUM HOSE

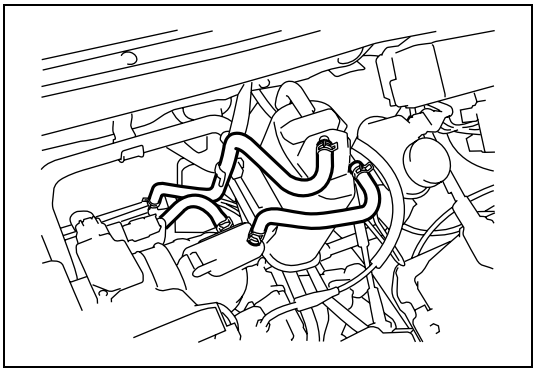

Check hoses for connection, leakage, clog and deterioration. Replace as necessary.

EVAP CANISTER PURGE VALVE

1) With ignition switch OFF, disconnect coupler from canister purge valve.
2) Remove EVAP canister purge valve from air cleaner assembly.

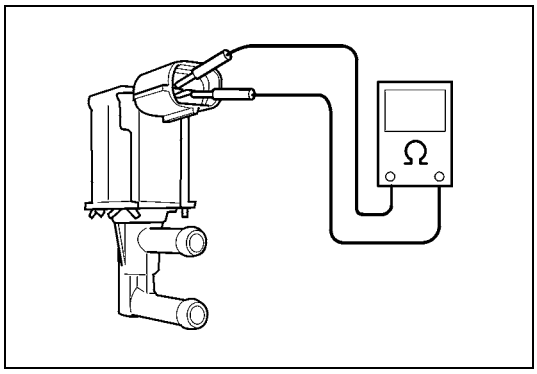

3) Check resistance between two terminals of EVAP canister purge valve.
   If resistance is not as specified, replace.

EVAP canister resistance
30 – 34 Ω at 20°C (68°F)

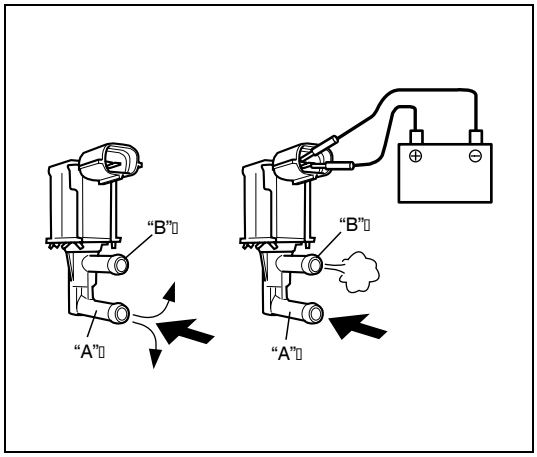

4) With coupler disconnected, blow into pipe "A". Air should not come out of pipe "B".
5) Connect 12 V-battery to EVAP canister purge valve terminals. In this state, blow pipe "A". Air should come out of pipe "B".
   If check result is not described, replace EVAP canister purge valve.

WARNING:
Do not suck the air through valve. Fuel vapor inside valve in harmful.

6) Install EVAP canister purge valve to air cleaner assembly.

EVAP CANISTER

WARNING:
DO NOT SUCK nozzles on EVAP canister. Fuel vapor inside EVAP canister is harmful.

1) Check outside of EVAP canister visually.
2) Disconnect vacuum hoses from EVAP canister.

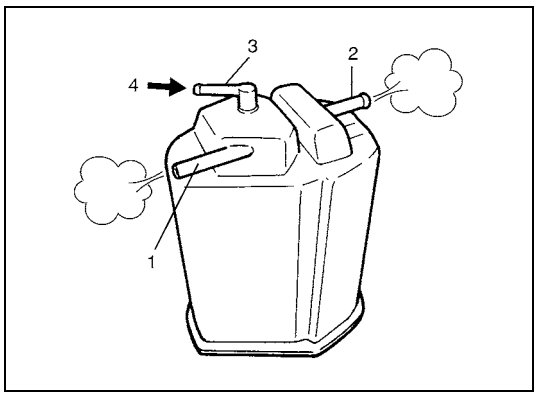

3) Check that there should be no restriction of flow through purge pipe (1) and air pipe (2) when air is blown (4) into tank pipe (3).
   If any faulty condition is found in above inspection, replace.

PCV system inspection

NOTE:

Be sure to check that there is no obstruction in PCV valve or its hoses before checking IAC duty, for obstructed PCV valve or hose hampers its accurate adjustment.

PCV HOSE

Check hoses for connection, leakage, clog and deterioration.
Replace as necessary.

PCV VALVE

1) Detach air cleaner assembly.
2) Disconnect PCV valve from cylinder head cover and install plug to head cover hole.
3) Install air cleaner assembly temporarily.
4) Run engine at idle.

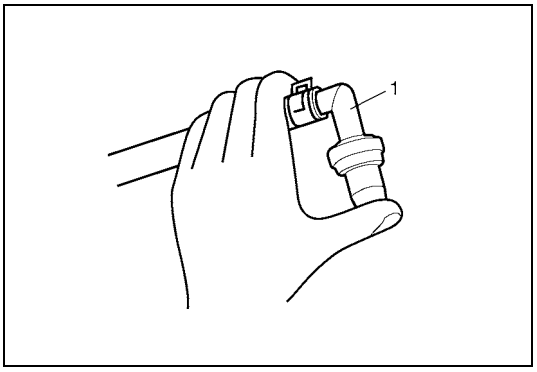

5) Place your finger over end of PCV valve (1) to check for vacuum.
   If there is no vacuum, check for clogged valve. Replace as necessary.

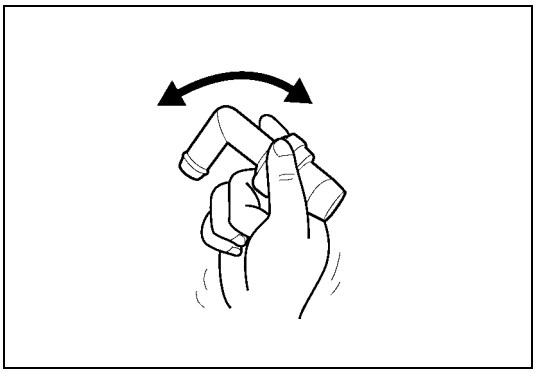

6) After checking vacuum, stop engine and remove PCV valve. Shake valve and listen for the rattle of check needle inside the valve. If valve does not the rattle, replace valve.

7) After checking, remove plug and install PCV valve.
8) Install air cleaner assembly securely.

Special Tool

 09912-58442 Pressure gauge	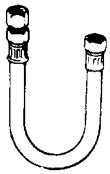 09912-58432 Pressure hose	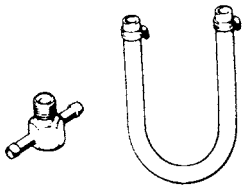 09912-58490 3-way joint & hose	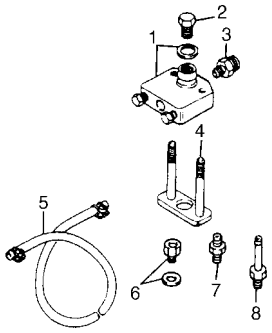 09912-58421 Checking tool set (See NOTE "A".)
 09912-57610 Checking tool plate	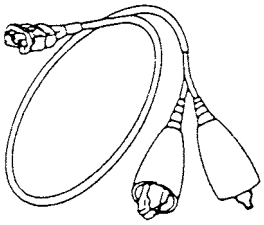 09930-88530 Injector test lead	 Tech 2 kit (Suzuki Scan Tool) (See NOTE "B".)	

NOTE:

- **"A": This kit includes the following items.**
  1. Tool body & washer, 2. Body plug, 3. Body attachment-1, 4. Holder, 5. Return hose & clamp, 6. Body attachment-2 & washer, 7. Hose attachment-1, 8. Hose attachment-2
- **"B": This kit includes the following items.**
  1. Tech 2, 2. PCMCIA card, 3. DLC cable, 4. SAE 16/19 adaptor, 5. Cigarette cable, 6. DLC loopback adaptor, 7. Battery power cable, 8. RS232 cable, 9. RS232 adaptor, 10. RS 232 loopback connector, 11. Storage case, 12. Power supply

Tightening Torque Specification

Fastening part	Tightening torque		
	N•m	kg-m	lb-ft
TP sensor mounting screw	2.5	0.25	1.8
IAC valve screw	3.5	0.35	2.5
ECT sensor	15	1.5	11.5
Heated oxygen sensor	45	4.5	32.5
Camshaft position sensor	10	1.0	7.5
Knock sensor	22	2.2	16.0
Oil control valve mounting nut	11	1.1	8.0
Oil gallery pipe No.1 bolt	30	3.0	21.5
Delivery pipe bolt	25	2.5	18.0
MAF and IAT sensor screw	2.5	0.25	1.8

SECTION 6F1

IGNITION SYSTEM (ELECTRONIC IGNITION SYSTEM)

WARNING:

For vehicles equipped with a Supplemental Restraint (Air Bag) System:

- **Service on and around the air bag system components or wiring must be performed only by an authorized SUZUKI dealer. Refer to "System Components and Wiring Location View" under "General Description" in Section 10B in order to confirm whether you are performing service on or near the air bag system components or wiring. Please observe all WARNINGS and "Service Precautions" under "On-Vehicle Service" in Section 10B before performing service on or around the air bag system components or wiring. Failure to follow WARNINGS could result in unintentional activation of the system or could render the system inoperative. Either of these two conditions may result in severe injury.**
- **Technical service work must be started at least 90 seconds after the ignition switch is turned to the "LOCK" position and the negative cable is disconnected from the battery. Otherwise, the system may be activated by reserve energy in the Sensing and Diagnostic Module (SDM).**

CONTENTS

General Description 6F1-2
Ignition System Construction 6F1-2
Ignition System Components Locator Diagram 6F1-2
Ignition System Wiring Circuit Diagram 6F1-3
Diagnosis 6F1-4
Ignition System Symptom Diagnosis 6F1-4
Reference Waveform 6F1-5
Ignition System Diagnostic Flow Table 6F1-5
On-Vehicle Service 6F1-7
Ignition Spark Test 6F1-7
High-Tension Cords Removal and Installation 6F1-7
High-Tension Cords Inspection 6F1-8
Spark Plugs Removal and Installation 6F1-8
Spark Plugs Inspection 6F1-9
Ignition Coil Assembly (Including Ignitor) Removal and Installation 6F1-10
Ignition Coil Assembly (Including Ignitor) Inspection 6F1-10
Crankshaft Position (CKP) Sensor 6F1-11
Ignition Timing Inspection 6F1-11
Tightening Torque Specification 6F1-12
Special Tool 6F1-12

General Description

Ignition System Construction

The ignition system is an electronic (distributorless) ignition system. Its consists of the parts as described below.

- ECM
  It detects the engine and vehicle conditions through the signals from the sensors, determines the most suitable ignition timing and time for electricity to flow to the primary coil and sends a signal to the ignitor (power unit) in the ignition coil assembly.
- Ignition coil assembly (including an igniter)
  The ignition coil assembly has a built-in ignitor which turns ON and OFF the current flow to the primary coil according to the signal from ECM. When the current flow to the primary coil is turned OFF, a high voltage is induced in the secondary coil.
- High tension cords and spark plugs.
- CMP sensor (Camshaft position sensor) and CKP sensor (Crankshaft position sensor)
  Using signals from these sensors, ECM identifies the specific cylinder whose piston is in the compression stroke, detects the crank angle and adjusts initial ignition timing automatically.
- TP sensor, ECT sensor, MAP sensor and other sensors/switches
  Refer to “Electronic Control System Description” in Section 6E1 for details.

Although this ignition system does not have a distributor, it has two ignition coil assemblies (one is for No.1 and No.4 spark plugs and the other is for No.2 and No.3 spark plugs). When an ignition signal is sent from ECM to the ignitor in the ignition coil assembly for No.1 and No.4 spark plugs, a high voltage is induced in the secondary coil and that passes through the high-tension cords and causes No.1 and No.4 spark plugs to spark simultaneously. Likewise, when an ignition signal is sent to the ignitor in the other ignition coil assembly, No.2 and No.3 spark plugs spark simultaneously.

Ignition System Components Locator Diagram

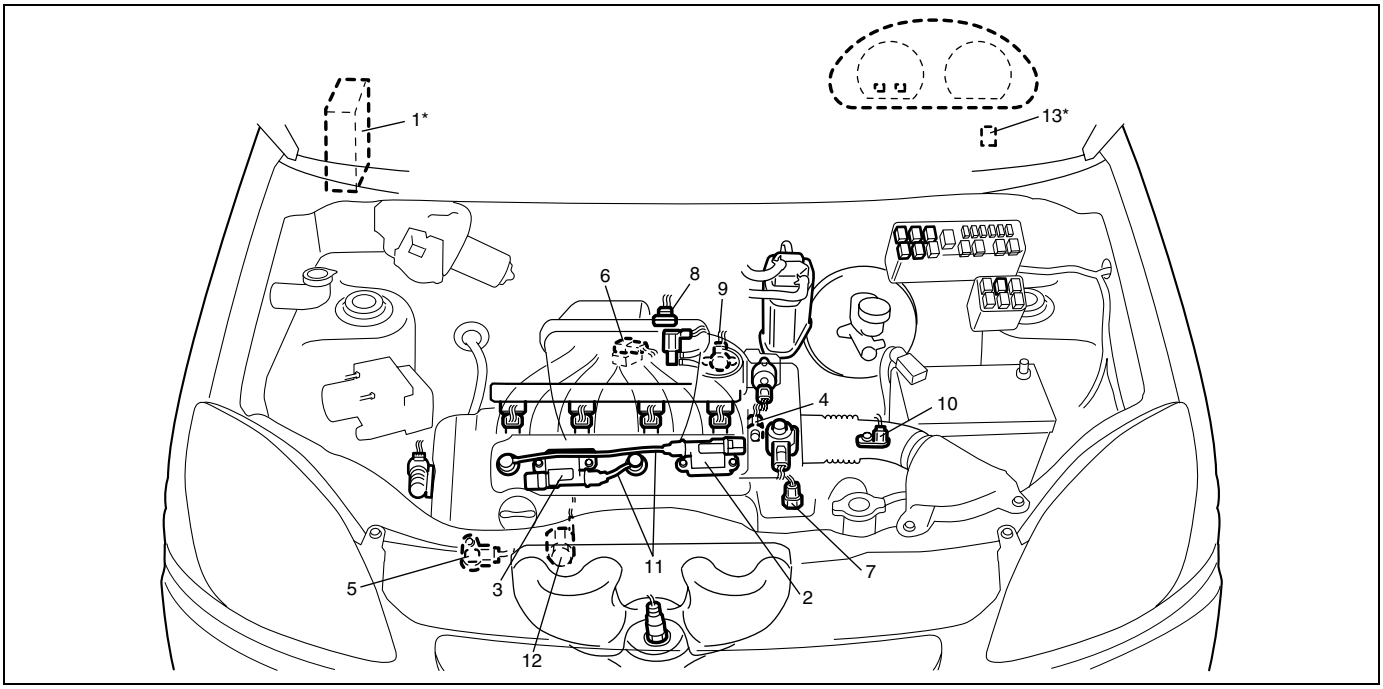

1. ECM	4. CMP sensor	7. ECT sensor	10. VSS	13. Data link connector
2. Ignition coil assembly for No.1 and No.4 spark plugs	5. CKP sensor	8. MAF and IAT sensor	11. High-tension cords	
3. Ignition coil assembly for No.2 and No.3 spark plugs	6. MAP sensor	9. TP sensor	12. Knock sensor	

NOTE:

Above figure shows left-hand steering vehicle. For right-hand steering vehicle, parts with (*) are installed at the opposite side.

Ignition System Wiring Circuit Diagram

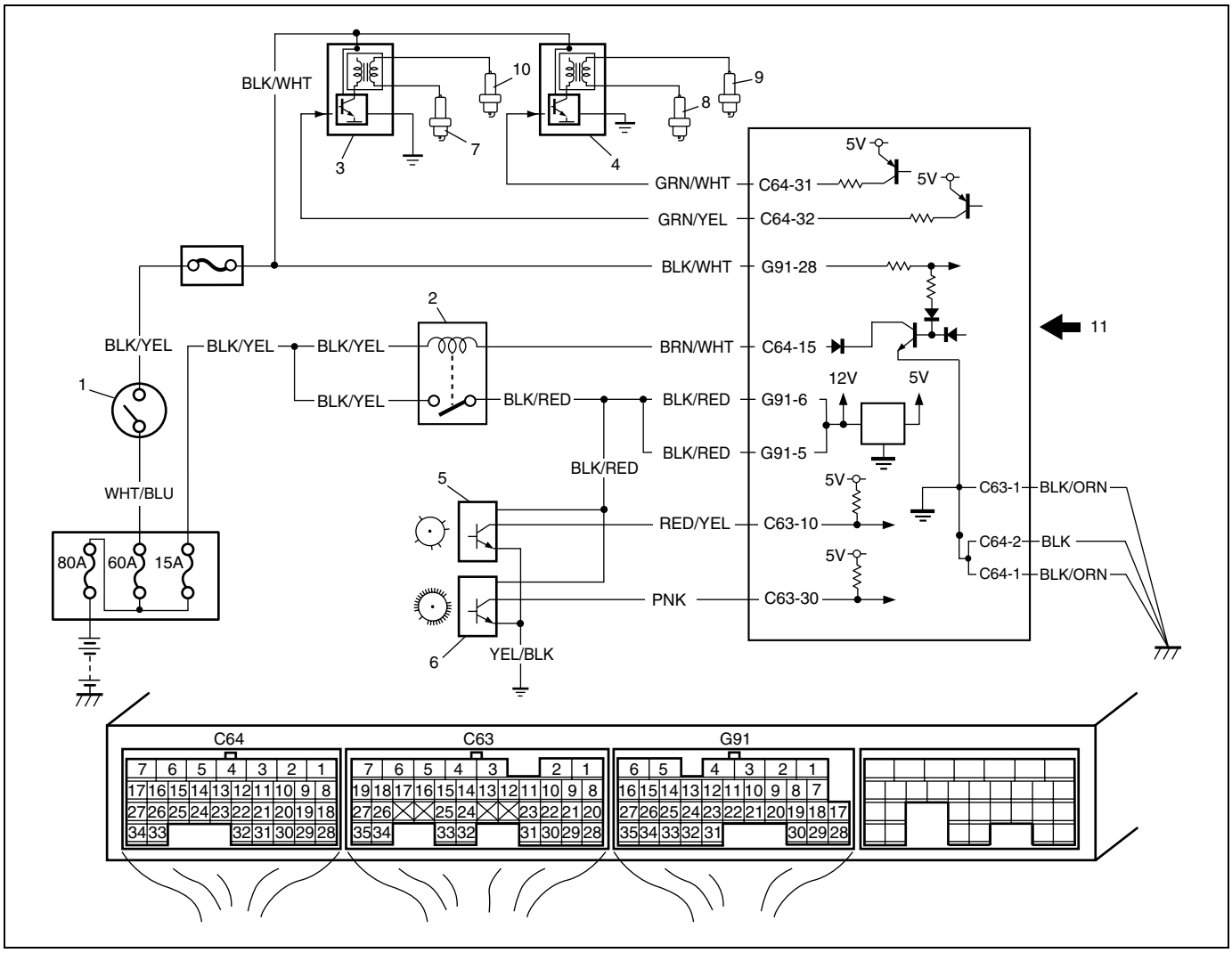

1. Ignition switch	7. No.1 spark plug
2. Main relay	8. No.2 spark plug
3. Ignition coil assembly for No.1 and No.4 spark plugs	9. No.3 spark plug
4. Ignition coil assembly for No.2 and No.3 spark plugs	10. No.4 spark plug
5. CMP sensor	11. Sensed information (MAP sensor, ECT sensor, MAF and IAT sensor, TP sensor, Knock sensor, VSS, Electric load signal, Engine start signal)
6. CKP sensor	

Diagnosis

Ignition System Symptom Diagnosis

Condition	Possible Cause	Correction
Engine cranks, but will not start or hard to start (No spark)	Blown fuse for ignition coil	Replace.
	Loose connection or disconnection of lead wire or high-tension cord(s)	Connect securely.
	Faulty high-tension cord(s)	Replace.
	Faulty spark plug(s)	Adjust, clean or replace.
	Faulty ignition coil	Replace ignition coil assembly.
	Faulty CKP sensor or CKP sensor plate	Clean, tighten or replace.
	Faulty CMP sensor or sensor rotor tooth of camshaft	Clean, tighten or replace.
	Faulty ECM	Replace.
Poor fuel economy or engine performance	Incorrect ignition timing	Check related sensors and CKP sensor plate.
	Faulty spark plug(s) or high-tension cord(s)	Adjust, clean or replace.
	Faulty ignition coil assembly	Replace.
	Faulty CKP sensor or CKP sensor plate	Clean, tighten or replace.
	Faulty CMP sensor or sensor rotor tooth of camshaft	Clean, tighten or replace.
	Faulty ECM	Replace.

Reference Waveform

[A]

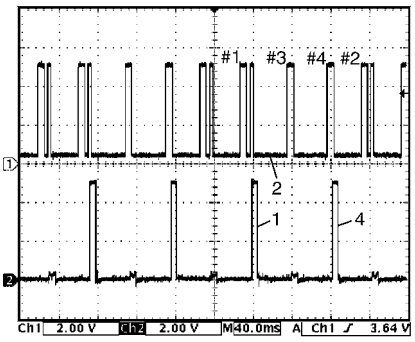

[B]

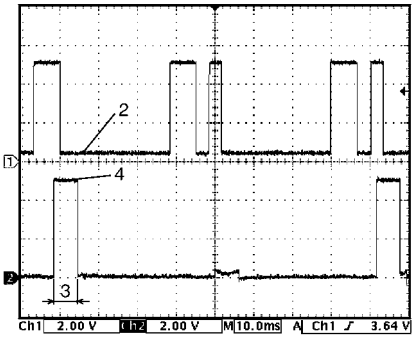

Oscilloscope waveforms of CMP sensor and No.1/No.4 ignition trigger signal are as shown in figure when connecting oscilloscope between terminals C63-10 of ECM connectors connected to ECM and ground, and between terminal C64-32 and ground.

Measurement condition for waveform [A]

Measurement terminal	**CH1: C63-10 to C64-1 CH2: C64-32 to C64-1**
Oscilloscope setting	**CH1: 2 V/DIV, CH2: 2 V/DIV TIME: 40 ms/DIV**
Measurement condition	**After warmed up engine to normal operating temperature Engine at specified idle speed**

Measurement condition for waveform [B]

Measurement terminal	**CH1: C63-10 to C64-1 CH2: C64-32 to C64-1**
Oscilloscope setting	**CH1: 2 V/DIV, CH2: 2 V/DIV TIME: 10 ms/DIV**
Measurement condition	**After warmed up engine to normal operating temperature Engine at specified idle speed**

[A]: Oscilloscope waveforms at specified idle speed
[B]: Detail waveforms at specified idle speed
1. No.1 ignition trigger signal
2. CMP sensor signal
3. Primary coil current flow time
4. No.4 ignition trigger signal

Ignition System Diagnostic Flow Table

Step	Action	Yes	No
1	Was “Engine and Emission Control System Check” in Section 6 performed?	Go to Step 2.	Go to “Engine and Emission Control System Check” in Section 6.
2	Ignition Spark Test 1) Check all spark plugs for condition and type referring to “Spark Plugs Inspection” in this section. 2) If OK, perform ignition spark test, referring to “Ignition Spark Test” in this section. Is spark emitted from all spark plugs?	Go to Step 11.	Go to Step 3.
3	Diagnostic Trouble Code (DTC) Check Is DTC stored in ECM?	Go to applicable “DTC Table” in Section 6.	Go to Step 4.

Step	Action	Yes	No
4	Electrical Connection Check 1) Check ignition coil assemblies and high-tension cords for electrical connection. Are they connected securely?	Go to Step 5.	Connect securely.
5	High-tension Cords Check 1) Check high-tension cord for resistance referring to “High-Tension Cords Inspection” in this section. Is check result satisfactory?	Go to Step 6.	Replace high-tension cord(s).
6	Ignition Coil Assembly Power Supply and Ground Circuit Check 1) Check ignition coil assembly power supply and ground circuits for open and short. Are circuits in good condition?	Go to Step 7.	Repair or replace.
7	Ignition Coil Assembly Check 1) Check ignition coil for resistance referring to “Ignition Coil Assembly (Including Ignitor) Inspection” in this section. Is check result satisfactory?	Go to Step 8.	Replace ignition coil assembly.
8	Crankshaft Position (CKP) Sensor Check 1) Check crankshaft position sensor referring to Step 2, 7 and 8 of “DTC P0335 Crankshaft Position (CKP) Sensor Circuit” in Section 6. Is check result satisfactory?	Go to Step 9.	Tighten CKP sensor bolt, replace CKP sensor or CKP sensor plate.
9	Ignition Trigger Signal Circuit Check 1) Check ignition trigger signal wire for open, short and poor connection. Is circuit in good condition?	Go to Step 10.	Repair or replace.
10	A Known-good Ignition Coil Assembly Substitution 1) Substitute a known-good ignition coil assembly and then repeat Step 2. Is check result of Step 2 satisfactory?	Go to Step 11.	Substitute a known-good ECM and then repeat Step 2.
11	Ignition Timing Check 1) Check initial ignition timing and ignition timing advance referring to “Ignition Timing Inspection” in this section. Is check result satisfactory?	System is in good condition.	Check CMP sensor, CMP sensor rotor tooth of camshaft, CKP sensor, CKP sensor plate and/or input signals related to this system.

On-Vehicle Service

Ignition Spark Test

1) Remove air cleaner assembly with air intake pipe.
2) Disconnect all injector couplers from injectors.

WARNING:
Without disconnection of injector couplers, combustible gas may come out from spark plug holes during this test and may get ignited in engine room.

3) Remove spark plug and check it for condition and type referring to “Spark Plugs Removal and Installation” in this section.

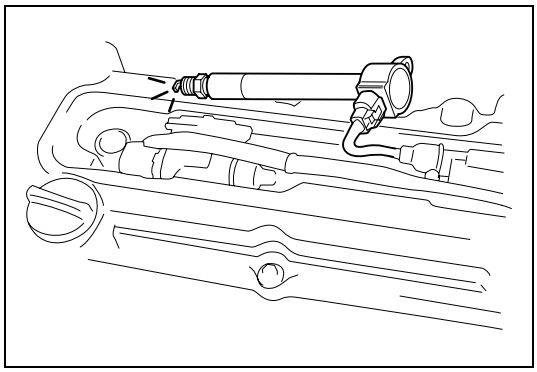

4) If OK, connect ignition coil coupler to ignition coil assembly and connect spark plug to ignition coil assembly or high-tension cord. Ground spark plug.
5) Crank engine and check if each spark plug sparks.
6) If no spark is emitted, inspect the related parts as described under “Ignition System Symptom Diagnosis” in this section.

High-Tension Cords Removal and Installation

REMOVAL

1) Remove air cleaner assembly with air intake pipe and cylinder head upper cover.

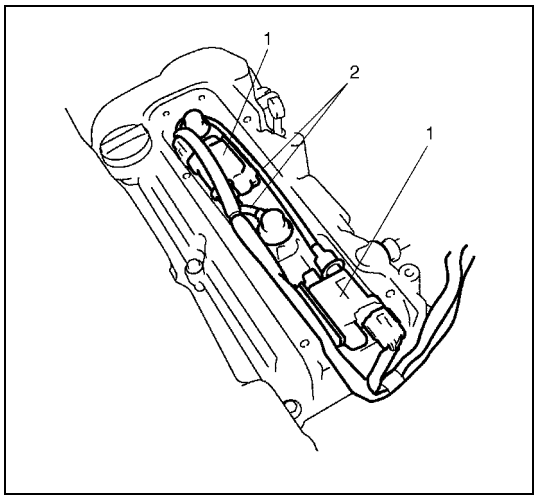

2) Disconnect high-tension cords (2) from ignition coil assemblies (1) while gripping each cap.
3) Pull out high-tension cords from spark plugs while gripping each cap.

CAUTION:
- **Removal of high-tension cords together with clamps will be recommended so as not to damage their inside wire (resistive conductor).**
- **For the same reason, pull out each connection by gripping cap portion.**

INSTALLATION

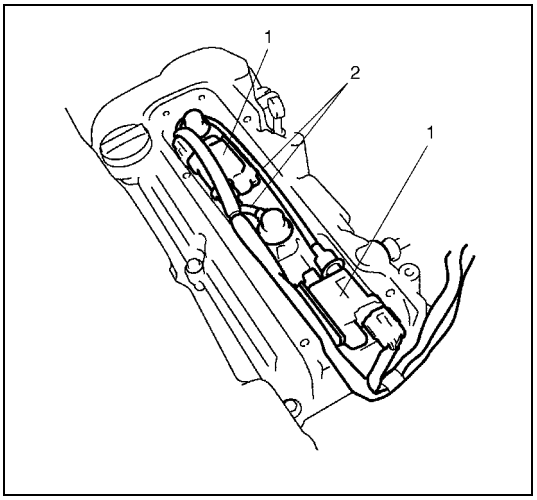

1) Install high-tension cords (2) to spark plugs and ignition coil assemblies (1) while gripping each cap.

CAUTION:
- **Never attempt to use metal conductor high-tension cords as replacing parts.**
- **Insert each cap portion fully when installing high-tension cords.**

2) Install cylinder head upper cover and air cleaner assembly with air intake pipe.

High-Tension Cords Inspection

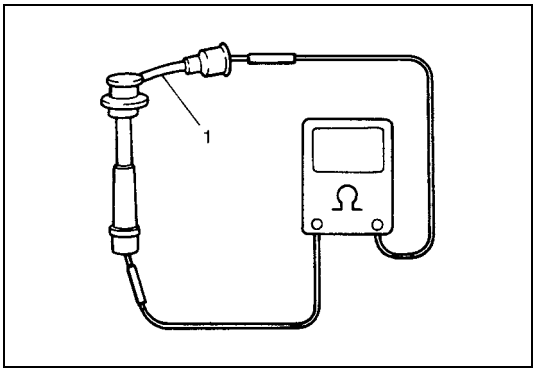

Measure resistance of high-tension cord (1) by using ohmmeter. If resistance exceeds specification, replace high-tension cord(s).

No.1 high-tension cord resistance
1.4 – 4.0 kΩ

No.3 high-tension cord resistance
0.6 – 2.0 kΩ

Spark Plugs Removal and Installation

CAUTION:
- **When servicing the iridium/platinum spark plugs (slender center electrode type plugs), do not touch the center electrode to avoid damage to it. The electrode is not strong enough against mechanical force as it is slender and its material is not mechanically tough**
- **Do not clean or adjust gap for the iridium/platinum spark plugs.**

REMOVAL

1) Remove air cleaner assembly with air intake pipe and cylinder head upper cover.
2) Pull out high-tension cords by gripping their caps and then remove ignition coil assemblies referring to “Ignition Coil Assembly (Including Ignitor) Removal and Installation” in this section.
3) Remove spark plugs.

INSTALLATION

1) Install spark plugs and torque them to specification.

Tightening torque
Spark plug: 25 N·m (2.5 kg-m, 18.0 lb-ft)

2) Install ignition coil assemblies referring to “Ignition Coil Assembly (Including Ignitor) Removal and Installation” in this section.
3) Install high-tension cords securely by gripping their caps.
4) Install cylinder head upper cover and air cleaner assembly with air intake pipe.

Spark Plugs Inspection

- Inspect them for:
  – Electrode wear
  – Carbon deposits
  – Insulator damage

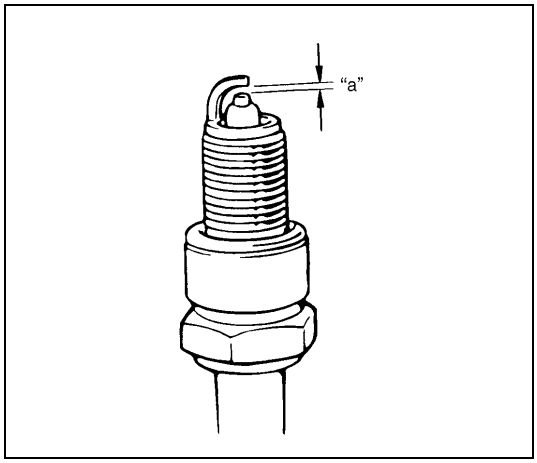

- If any abnormality is found, for spark plug other than iridium/platinum, adjust air gap, clean with spark plug cleaner or replace them with specified new pugs.
  For iridium/platinum spark plugs, replace them with new plugs.

Spark plug air gap
“a”: 1.0 – 1.1 mm (0.040 – 0.043 in.)

Spark plug type
NGK: IFR6J11 (iridium/platinum spark plug)

Ignition Coil Assembly (Including Ignitor) Removal and Installation

REMOVAL

1) Disconnect negative cable at battery.
2) Remove air cleaner assembly with air intake pipe and cylinder head upper cover.
3) Disconnect ignition coil coupler.

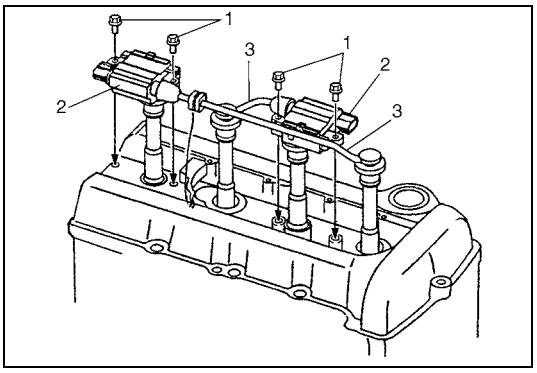

4) Disconnect high-tension cord (3) from ignition coil assembly (2).
5) Remove ignition coil bolts (1) and then pull out ignition coil assembly.

INSTALLATION

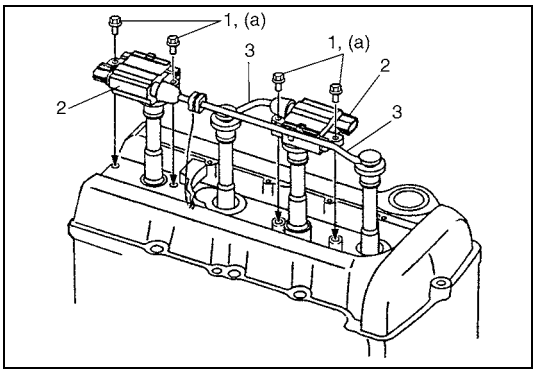

1) Install ignition coil assembly (2).
2) Tighten ignition coil bolts (1) to specified torque, and then connect ignition coil coupler.

Tightening torque
Ignition coil bolt (a): 10 N·m (1.0 kg-m, 7.5 lb-ft)

3) Install high-tension cord (3) to ignition coil assembly while gripping its cap.
4) Install cylinder head upper cover and air cleaner assembly with air intake pipe.
5) Connect negative cable to battery.

Ignition Coil Assembly (Including Ignitor) Inspection

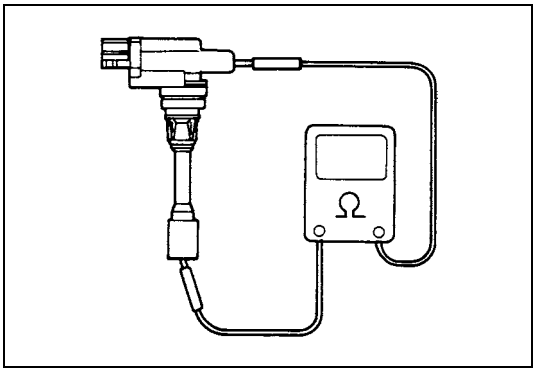

Measure secondary coil for resistance.
If resistance is out of specification, replace ignition coil assembly.

Secondary coil resistance
7.1 – 9.5 kΩ at 20°C, 68°F

Crankshaft Position (CKP) Sensor

Refer to “Crankshaft position sensor (CMP sensor) removal and installation” and “Crankshaft position sensor (CKP sensor) inspection” in Section 6E1 for removal, inspection and installation.

Ignition Timing Inspection

NOTE:

- **Ignition timing is not adjustable. If ignition timing is out of specification, check system related parts.**
- **Before starting engine, place transmission gear shift lever in “Neutral” (shift selector lever to “P” range for A/T model), and set parking brake.**

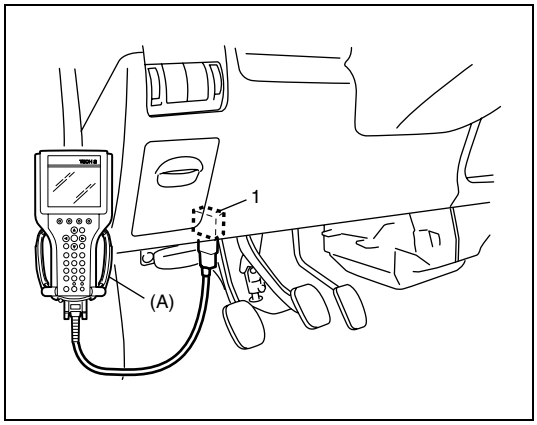

1) Connect scan tool to DLC (1) with ignition switch OFF.

   Special tool
   (A): Suzuki Scan Tool

2) Start engine and warm it up to normal operating temperature.
3) Make sure that all of electrical loads except ignition are switched off.
4) Check to be sure that idle speed is within specification referring to “Idle speed/idle air control (IAC) duty inspection” in Section 6E1.
5) Fix ignition timing by using “Fixed Spark” of “Misc Test” mode on scan tool.

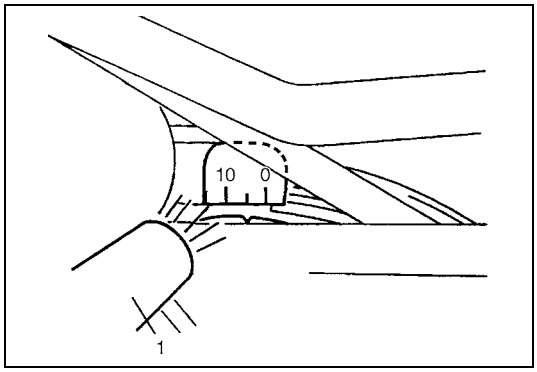

6) Set timing light (1) to high-tension cord for No.1 cylinder and check that ignition timing is within specification.

   Initial ignition timing (fixed with scan tool)
   5 ± 3° BTDC at idle speed

   Ignition order
   1-3-4-2

7) If ignition timing is out of specification, check the followings:
   - CKP sensor
   - CKP sensor plate
   - TP sensor
   - CMP sensor
   - CMP sensor rotor tooth of camshaft
   - VSS
   - Timing chain cover installation

8) After checking Initial Ignition Timing, release ignition timing fixation by using scan tool.
9) With engine idling (throttle opening at closed position and car stopped), check that ignition timing is about 3° – 13° BTDC. (Constant variation within a few degrees from 3° – 13° indicates no abnormality but proves operation of electronic timing control system.) Also, check that increasing engine speed advances ignition timing.
   If above check results are not satisfactory, check CKP sensor and ECM.

Tightening Torque Specification

Fastening part	Tightening torque		
	N•m	kg-m	lb-ft
Spark plug	25	2.5	18.0
Ignition coil bolt	10	1.0	7.5

Special Tool

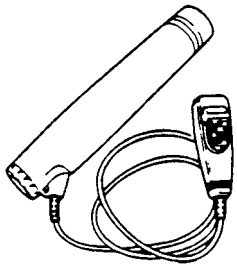	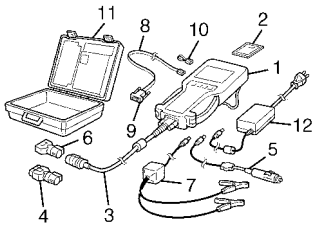
09930-76420 Timing light (Dry cell type)	Tech 2 kit (Suzuki Scan Tool) (See NOTE.)

NOTE:

This kit includes the following items.

1. Tech 2, 2. PCMCIA card, 3. DLC cable, 4. SAE 16/19 adapter, 5. Cigarette cable, 6. DLC loopback adapter, 7. Battery power cable, 8. RS232 cable, 9. RS232 adapter, 10. RS232 loopback connector, 11. Storage case, 12. Power supply

SECTION 6G

CRANKING SYSTEM

WARNING:

For vehicles equipped with Supplemental Restraint (Air Bag) System:

- **Service on and around the air bag system components or wiring must be performed only by an authorized SUZUKI dealer. Refer to System Components and Wiring Location View under General Description in air bag system section in order to confirm whether you are performing service on or near the air bag system components or wiring. Please observe all WARNINGS and Service Precautions under On-Vehicle Service in air bag system section before performing service on or around the air bag system components or wiring. Failure to follow WARNINGS could result in unintentional activation of the system or could render the system inoperative. Either of these two conditions may result in severe injury.**
- **Technical service work must be started at least 90 seconds after the ignition switch is turned to the "LOCK" position and the negative cable is disconnected from the battery. Otherwise, the system may be activated by reserve energy in the Sensing and Diagnostic Module (SDM).**

NOTE:

Starting motor varies depending on specifications, etc. Therefore, be sure to check model and specification of the vehicle being serviced before replacing parts.

CONTENTS

General Description 6G-2
Cranking System Circuit Diagram 6G-2
Diagnosis 6G-2
Cranking System Symptom Diagnosis 6G-2
Cranking System Test 6G-4
Pull-in test 6G-4
Hold-in test 6G-4
Plunger and pinion return test 6G-4
No-load performance test 6G-5
ON-Vehicle Service 6G-5
Starting Motor Dismounting and Remounting 6G-5
Dismounting 6G-5
Remounting 6G-5
Starting Motor Disassembly and Reassembly 6G-6
Starting Motor Inspection 6G-8
Specification 6G-13
0.8 kW type 6G-13
1.2 kW type 6G-13
Tightening Torque Specification 6G-14
Required Service Material 6G-14
Special Tools 6G-14

General Description

Cranking System Circuit Diagram

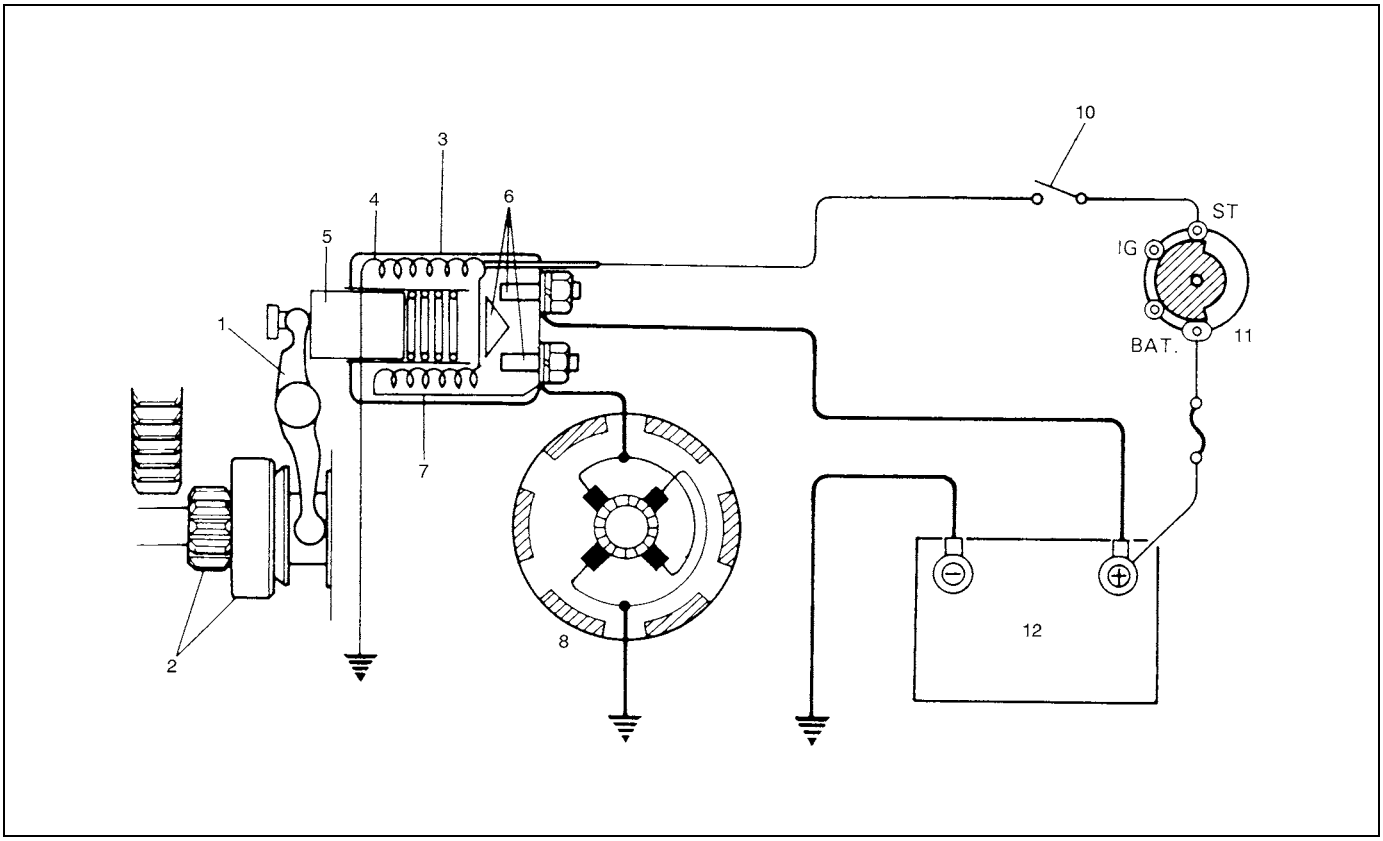

1. Pinion drive lever	5. Plunger	9. Blank
2. Pinion & Over-running clutch	6. Magnetic switch contacts	10. A/T: Transmission range switch (shift lever switch)
3. Magnetic switch	7. Pull-in coil	11. Ignition & Starter switch
4. Hold-in coil	8. Starting motor	12. Battery

Diagnosis

Cranking System Symptom Diagnosis

Possible symptoms due to starting system trouble would be as follows:

- Starting motor does not run (or runs slowly)
- Starting motor runs but fails to crank engine
- Abnormal noise is heard

Proper diagnosis must be made to determine exactly where the cause of each trouble lies.....in battery, wiring harness, (including starting motor switch), starting motor or engine.

Do not remove motor just because starting motor does not run. Check following items and narrow down scope of possible causes.

1) Condition of trouble
2) Tightness of battery terminals (including ground cable connection on engine side) and starting motor terminals
3) Discharge of battery
4) Mounting of starting motor

Condition	Possible Cause	Correction
Motor not running (No operating sound of magnetic switch)	Shift lever switch is not in P or N, or not adjusted (A/T)	Shift in P or N, or adjust switch.
	Battery run down	Recharge battery.
	Battery voltage too low due to battery deterioration	Replace battery.
	Poor contact in battery terminal connection	Retighten or replace.
	Loose grounding cable connection	Retighten.
	Fuse set loose or blown off	Tighten or replace.
	Poor contacting action of ignition switch and magnetic switch	Replace.
	Lead wire coupler loose in place	Retighten.
	Open-circuit between ignition switch and magnetic switch	Repair.
	Open-circuit in pull-in coil	Replace magnetic switch.
	Brushes are seating poorly or worn down	Repair or replace.
	Poor sliding of plunger and/or pinion	Repair.
Motor not running (Operating sound of magnetic switch heard)	Battery run down	Recharge battery.
	Battery voltage too low due to battery deterioration	Replace battery.
	Loose battery cable connections	Retighten.
	Burnt main contact point, or poor contacting action of magnetic switch	Replace magnetic switch.
	Brushes are seating poorly or worn down	Repair or replace.
	Weakened brush spring	Replace.
	Burnt commutator	Replace armature.
	Layer short-circuit of armature	Replace.
	Crankshaft rotation obstructed	Repair.
Starting motor running but too slow (small torque) (If battery and wiring are satisfactory, inspect starting motor)	Insufficient contact of magnetic switch main contacts	Replace magnetic switch.
	Layer short-circuit of armature	Replace.
	Disconnected, burnt or worn commutator	Repair commutator or replace armature.
	Worn brushes	Replace brush.
	Weakened brush springs	Replace spring.
	Burnt or abnormally worn end bush	Replace bush.
Starting motor running, but not cranking engine	Worn pinion tip	Replace over-running clutch.
	Poor sliding of over-running clutch	Repair.
	Over-running clutch slipping	Replace over-running clutch.
	Worn teeth of ring gear	Replace flywheel.
Noise	Abnormally worn bush	Replace bush.
	Worn pinion or worn teeth of ring gear	Replace pinion or flywheel.
	Poor sliding of pinion (failure in return movement)	Repair or replace.
	Worn internal or planetary gear teeth	Replace.
	Lack of oil in each part	Lubricate.
Starting motor does not stop running	Fused contact points of magnetic switch	Replace magnetic switch.
	Short-circuit between turns of magnetic switch coil (layer short-circuit)	Replace magnetic switch.
	Failure of returning action in ignition switch	Replace.

Cranking System Test

CAUTION:
Each test must be performed within 3 – 5 seconds to avoid coil from burning.

Pull-in test

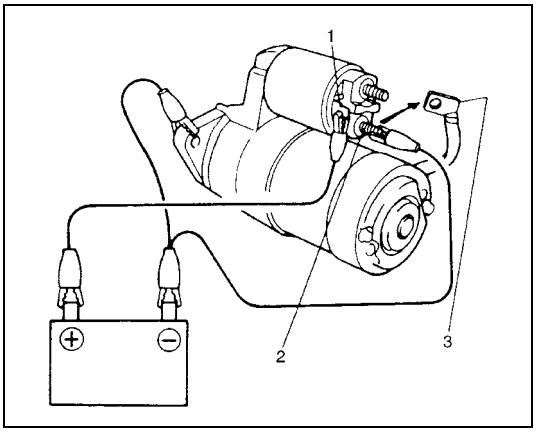

Connect battery to magnetic switch as shown.
Check that plunger and pinion move outward.
If plunger and pinion don't move, replace magnetic switch.

NOTE:
Before testing, disconnect lead wire from terminal M.

1.	Terminal "S"
2.	Terminal "M"
3.	Lead wire (switch to motor)

Hold-in test

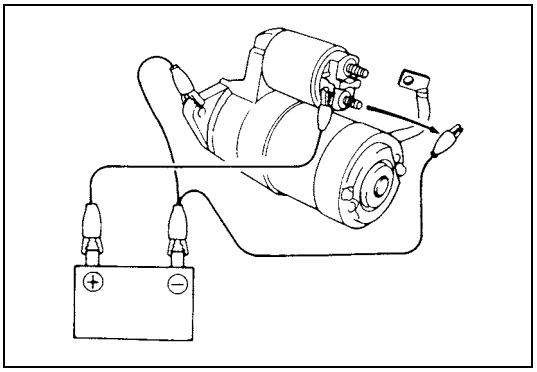

While connected as above with plunger out, disconnect negative lead from terminal "M".
Check that plunger and pinion remain out.
If plunger and pinion return inward, replace magnetic switch.

Plunger and pinion return test

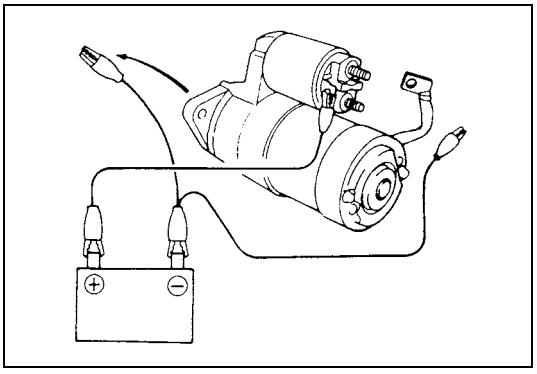

Disconnect negative lead from starting motor body.
Check that plunger and pinion return inward.
If plunger and pinion don't return, replace magnetic switch.

No-load performance test

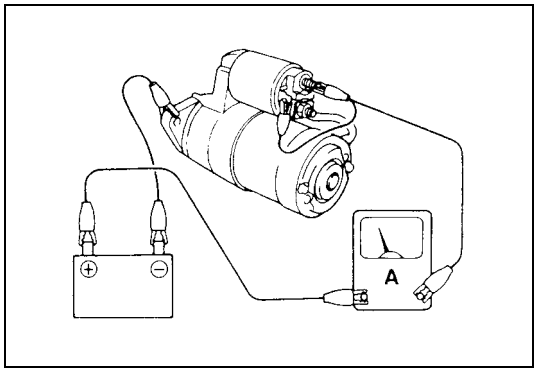

Connect battery and ammeter to starter as shown.
Check that starter rotates smoothly and steadily with pinion moving out. Check that ammeter indicates specified current.

Specified current (No-load performance test)
0.8 kW TYPE: 53 A MAX. at 11.5 V
1.2 kW TYPE: 90 A MAX. at 11 V

ON-Vehicle Service

Starting Motor Dismounting and Remounting

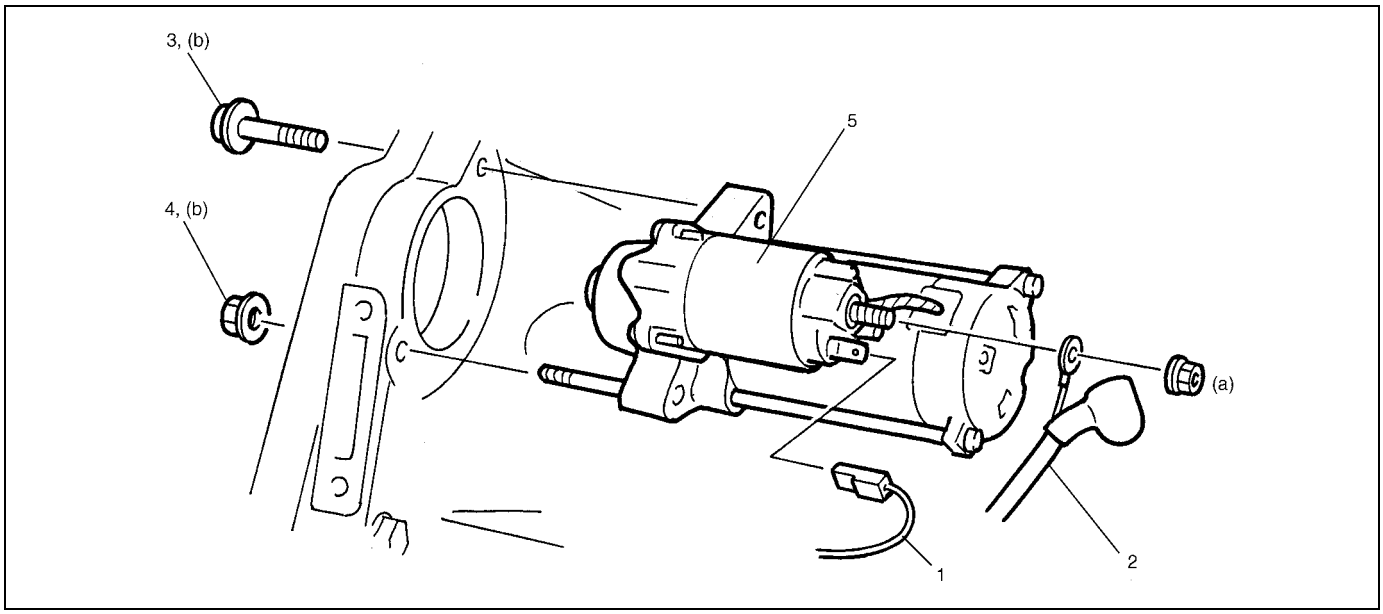

Dismounting

1) Disconnect negative (–) battery lead at battery.
2) Disconnect magnetic switch lead wire (1) and battery cable (2) from starting motor terminals.
3) Remove starting motor mount bolt (3) and nut (4).
4) Remove starting motor (5).

Remounting

Reverse the dismounting procedure.

Tightening torque
Starting motor battery cable nut (a): 10 N·m (1.0 kg-m, 7.5 lb-ft)
Starting motor mount bolt and nut (b): 45 N·m (4.5 kg-m, 32.5 lb-ft)

Starting Motor Disassembly and Reassembly

0.8 kW TYPE

NOTE:

Apply grease (99500-25010) to sliding surface of each below part.

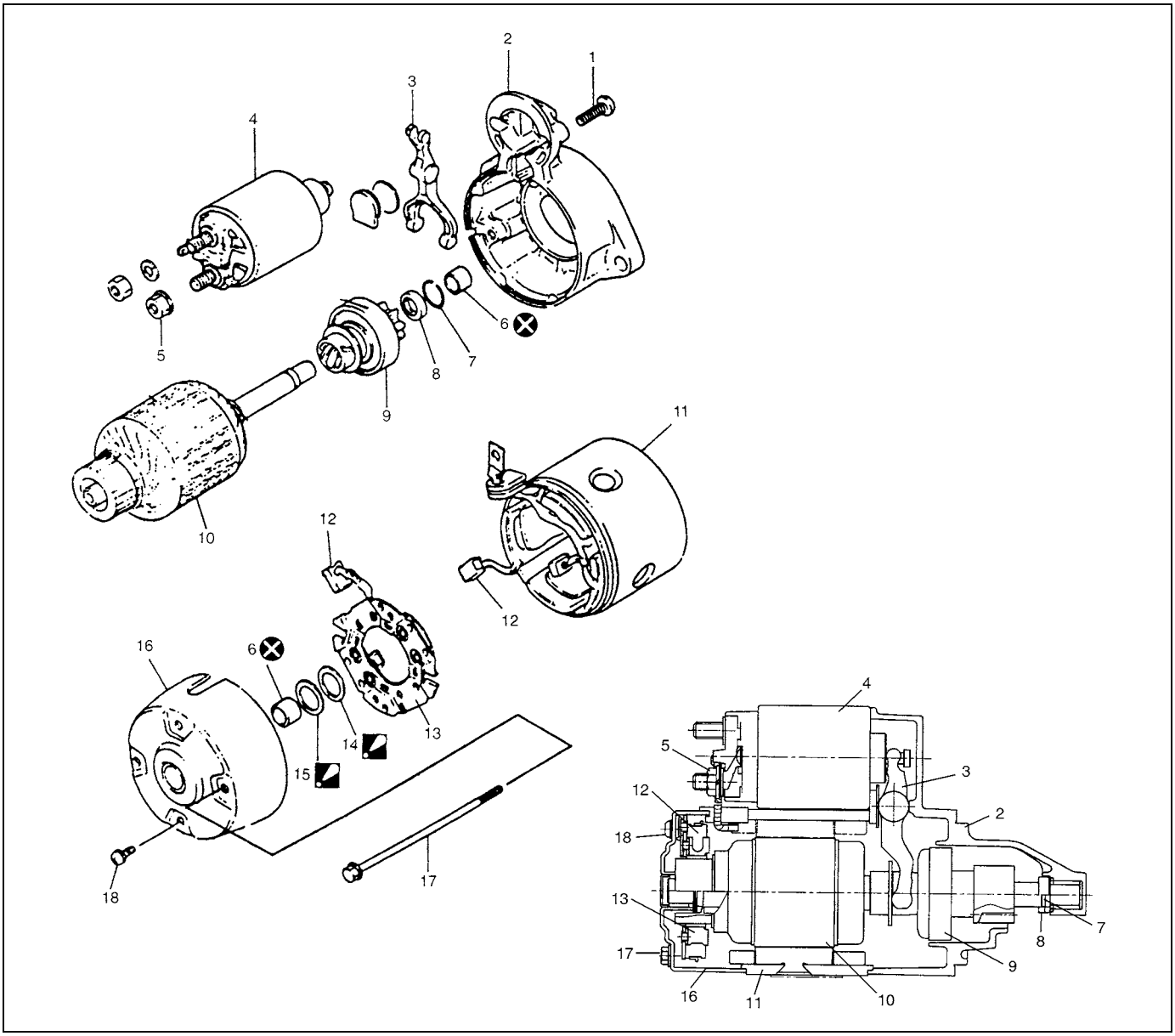

1. Magnetic switch mounting screw	8. Stop ring	15. Armature shaft washer : Thickness 0.5 mm (0.02 in.)
2. Front housing	9. Over-running clutch	16. Rear bracket
3. Pinion driver lever	10. Armature	17. Rear bracket bolt
4. Magnetic switch	11. Starting motor yoke	18. Rear bracket screw
5. Field coil lead nut	12. Brush	⊗ Do not reuse.
6. Armature shaft bush	13. Brush holder	
7. Snap ring	14. Armature shaft washer : Thickness 1.8 mm (0.07 in.)	

1.2 kW TYPE

NOTE:

Apply grease (99500-25010) to sliding surface of each below part.

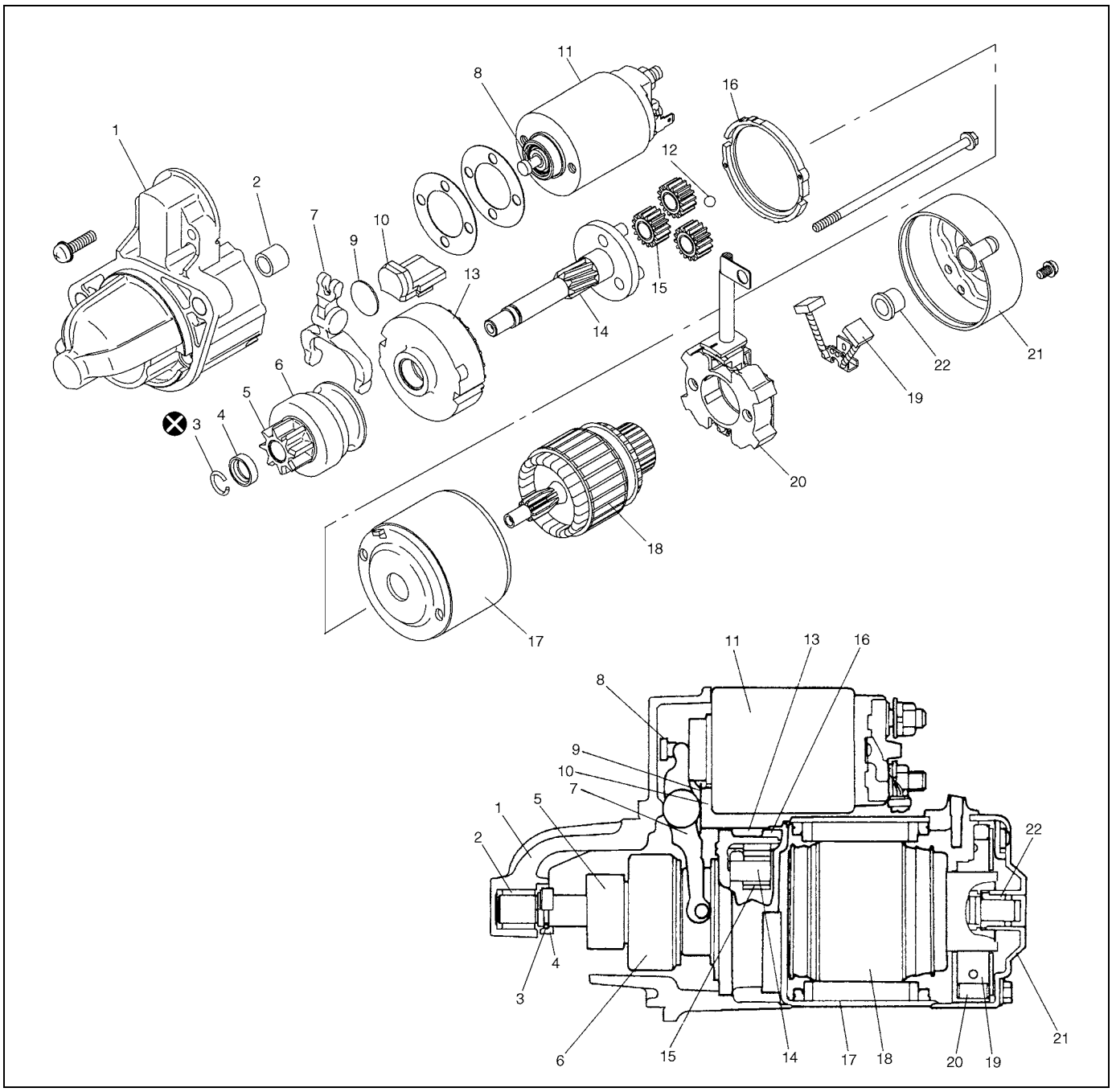

1. Front housing	7. Lever	13. Internal gear	19. Brush
2. Bush	8. Plunger	14. Planetary carrier shaft	20. Brush holder
3. Snap ring	9. Plate	15. Planetary gear	21. Rear bracket
4. Pinion stop ring	10. Seal rubber	16. Packing	22. Rear bush
5. Pinion gear	11. Magnetic switch	17. Yoke	⊗ Do not reuse.
6. Over-running clutch	12. Ball	18. Armature	

Starting Motor Inspection

PLUNGER

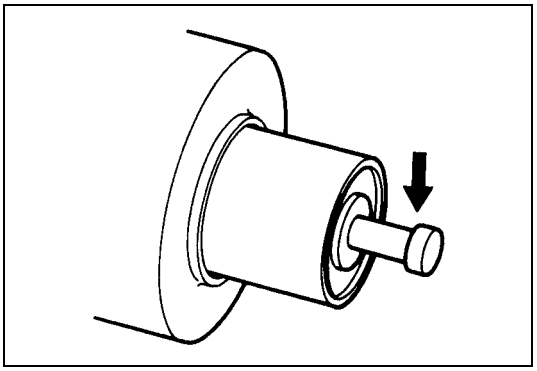

Inspect plunger for wear. Replace if necessary.

MAGNETIC SWITCH

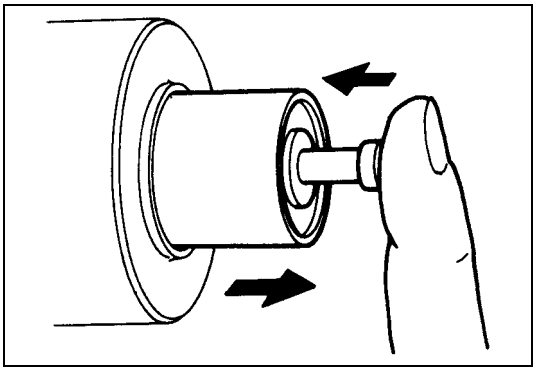

Push in plunger and release it. The plunger should return quickly to its original position. Replace if necessary.

Pull-in Coil Open Circuit Test

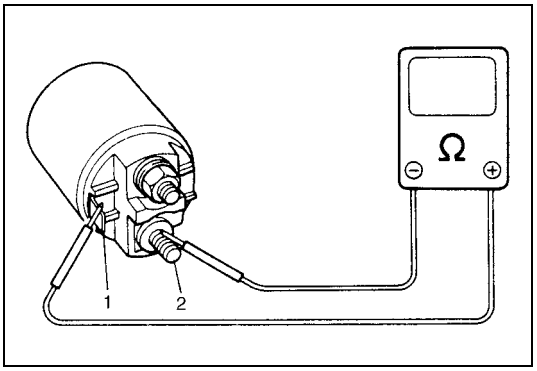

Check for continuity across magnetic switch 'S' terminal (1) and 'M' terminal (2). If no continuity, coil is open and should be replaced.

Hold-in Coil Open Circuit Test

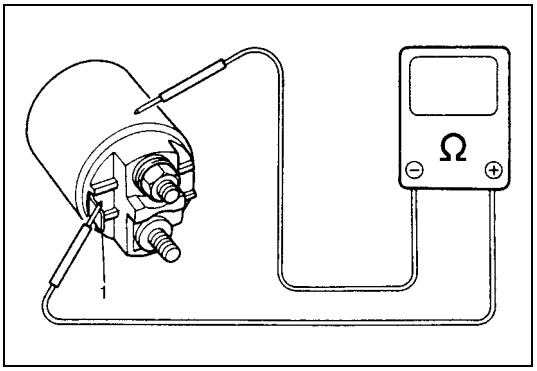

Check for continuity across magnetic switch 'S' terminal (1) and coil case. If no continuity, coil is open and should be replaced.

REAR BRACKET BUSH

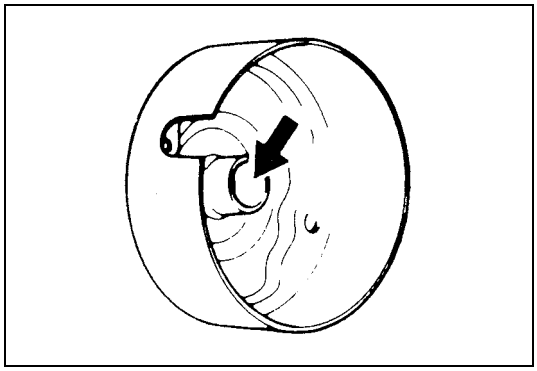

Inspect bush for wear or damage. Replace if necessary.

BRUSH

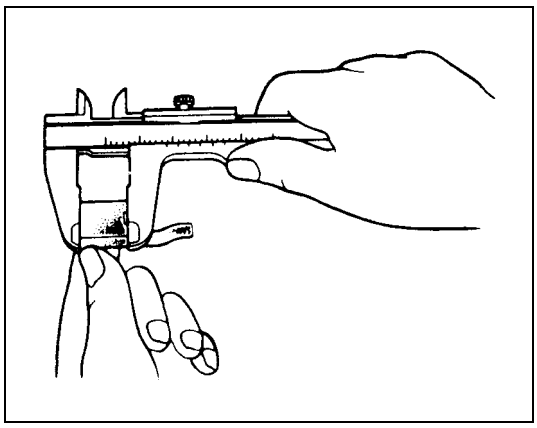

- Check brushes for wear.
  Measure length of brushes and if below limit, replace brush.

Brush length

	0.8 kW	1.2 kW
Standard	17.0 mm (0.67 in.)	12.3 mm (0.48 in.)
Limit	11.5 mm (0.45 in.)	7.0 mm (0.28 in.)

- Install brushes to each brush holder and check for smooth movement.

SPRING

Inspect brush springs for wear, damage or other abnormal conditions. Replace if necessary.

Brush spring tension

	0.8 kW	1.2 kW
Standard	1.95 kg (4.3 lb)	2.2 kg (4.85 lb)
Limit	0.9 kg (1.98 lb)	0.6 kg (1.32 lb)

DRIVE LEVER

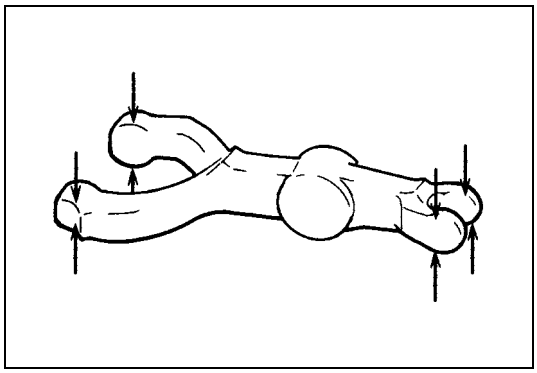

Inspect drive lever for wear. Replace if necessary.

BRUSH HOLDER

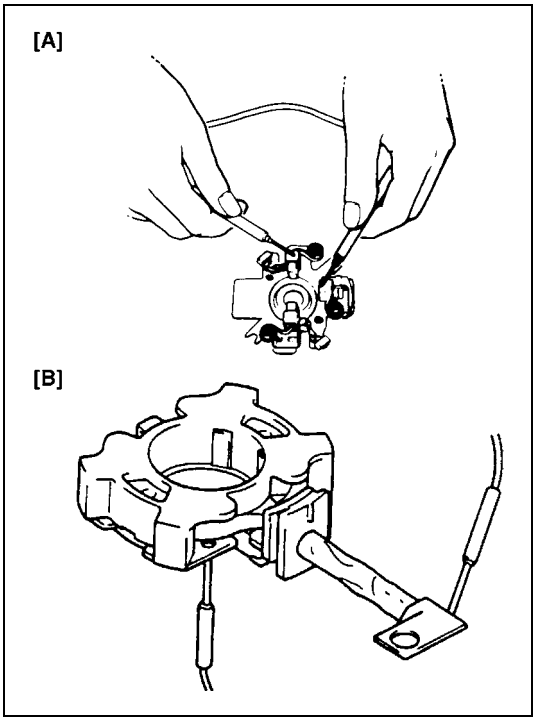

- Check movement of brush in brush holder. If brush movement within brush holder is sluggish, check brush holder for distortion and sliding faces for contamination.
  Clean or correct as necessary.
- Check for continuity across insulated brush holder (positive side) and grounded brush holder (negative side).
  If continuity exists, brush holder is grounded due to defective insulation and should be replaced.

[A]: 0.8 kW
[B]: 1.2 kW

ARMATURE

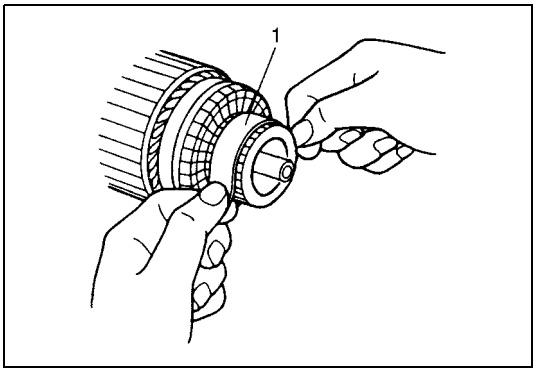

- Inspect commutator for dirt or burn. Correct with sandpaper or lathe, if necessary.

1. Sandpaper of #300 – 400

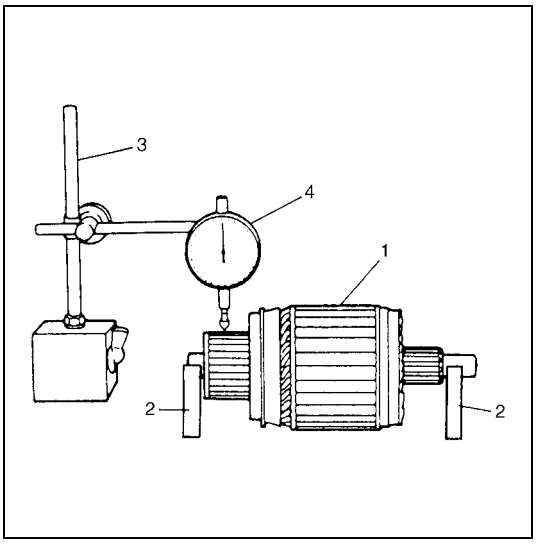

- Check commutator for uneven wear with armature supported on V-blocks (2). If deflection of dial gauge (4) pointer exceeds limit, repair or replace.

NOTE:

Below specification presupposes that armature is free from bend. Bent armature must be replaced.

Commutator out of round

	0.8 kW and 1.2 kW
Standard	0.05 mm (0.002 in.) or less
Limit	0.4 mm (0.015 in.)

1. Armature
3. Magnetic stand

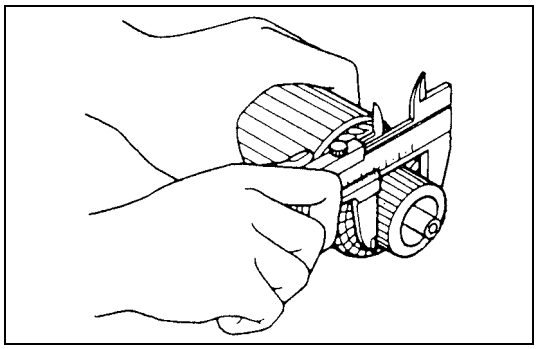

- Inspect commutator for wear. If diameter is below limit, replace armature.

Commutator outside diameter

	0.8 kW	1.2 kW
Standard	32.0 mm (1.26 in.)	29.4 mm (1.16 in.)
Limit	31.4 mm (1.24 in.)	28.8 mm (1.13 in.)

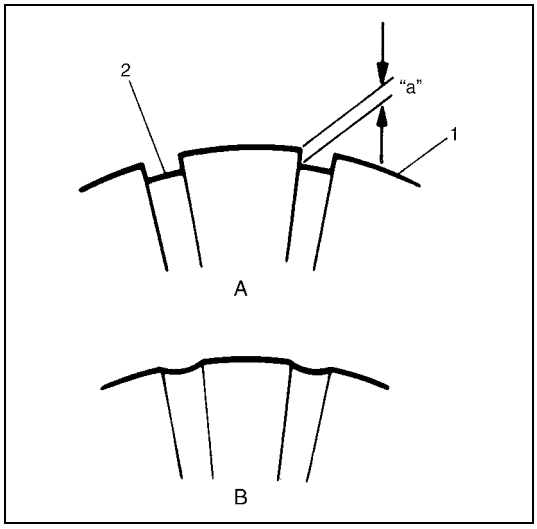

- Inspect commutator for insulator depth. Correct or replace if below limit.

Commutator insulator depth "a"
Standard: 0.4 – 0.6 mm (0.015 – 0.024 in.)
Limit: 0.2 mm (0.008 in.)

A: Correct
B: Incorrect
1. Commutator segment
2. Insulator

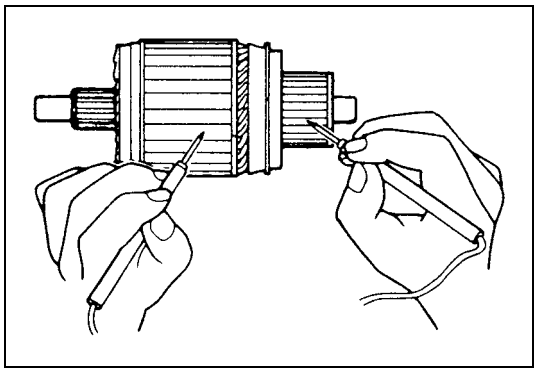

- Check commutator and armature core. If there is continuity, armature is grounded and must be replaced.

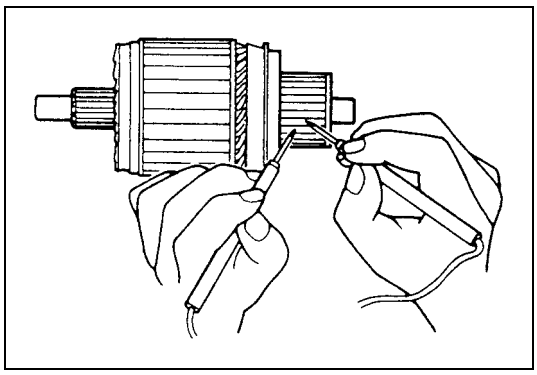

- Check for continuity between segments. If there is no continuity at any test point, there is an open circuit and armature must be replaced.

FIELD COIL (0.8 kW TYPE)

Ground Test

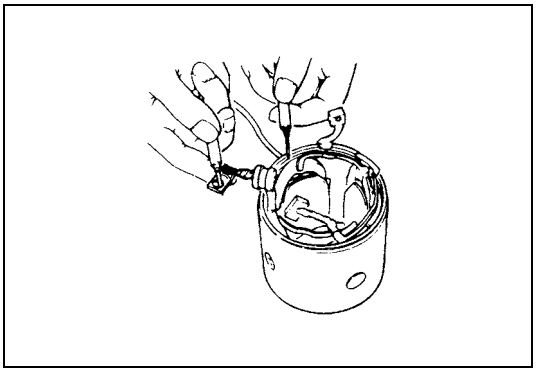

Check continuity between brush and bare surface.
If there is continuity, field windings are grounded.
The yoke assembly must be replaced.

GEARS (1.2 kW TYPE)

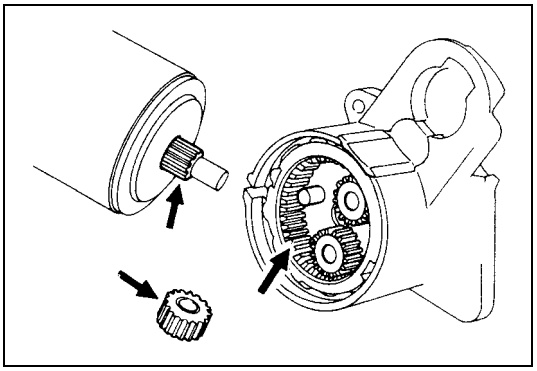

Inspect internal gear and planetary gears for wear, damage or other abnormal conditions. Replace if necessary.

PINION AND OVER-RUNNING CLUTCH

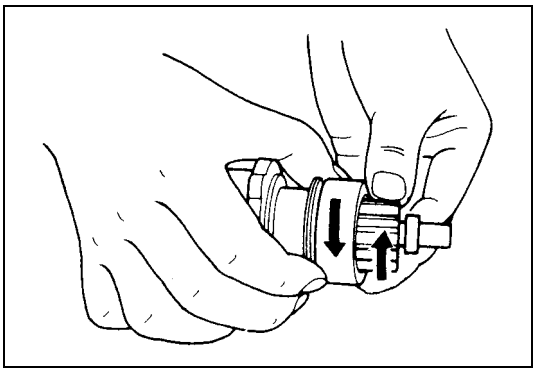

- Inspect pinion for wear, damage or other abnormal conditions.
  Check that clutch locks up when turned in direction of drive and rotates smoothly in reverse direction. Replace if necessary.

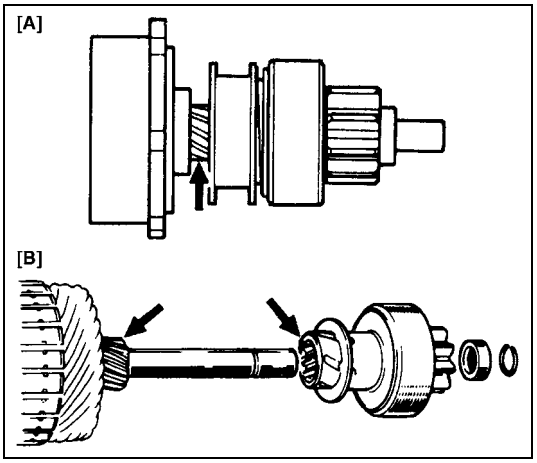

- Inspect spline teeth for wear or damage. Replace if necessary.
  Inspect pinion for smooth movement.

[A]: 1.2 kW
[B]: 0.8 kW

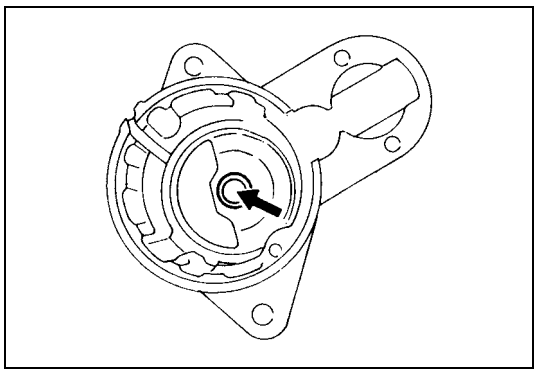

FRONT HOUSING NEEDLE BEARING OR BUSH

Inspect bush for wear or damage. Replace if necessary.

Specification

0.8 kW type

Voltage			12 volts	
Output			0.8 kW	
Rating			30 seconds	
Direction of rotation			Clockwise as viewed from pinion side	
Brush length			Standard: 17.0 mm (0.67 in.)	Limit: 11.5 mm (0.45 in.)
Number of pinion teeth			8	
Performance		Condition	Guarantee	
Around at 20°C (68°F)	No load characteristic	11.5 V	53 A maximum 6,000 rpm minimum	
	Load characteristic	9 V 150 A	2.8 N·m (0.28 kg-m, 2.0 lb-ft) minimum 2,000 rpm minimum	
	Locked characteristic	5 V	360 A maximum 6.86 N·m (0.7 kg-m, 5.1 lb-ft) minimum	
	Magnetic switch operating voltage		8 volts maximum	

1.2 kW type

Voltage			12 volts	
Output			1.2 kW	
Rating			30 seconds	
Direction of rotation			Clockwise as viewed from pinion side	
Brush length			Standard: 12.3 mm (0.48 in.)	Limit: 7.0 mm (0.27 in.)
Number of pinion teeth			8	
Performance		Condition	Guarantee	
Around at 20°C (68°F)	No load characteristic	11.0 V	90 A maximum 2,500 rpm minimum	
	Load characteristic	7.5 V 300 A	10.5 N·m (1.05 kg-m, 7.59 lb-ft) minimum 880 rpm minimum	
	Locked characteristic	4.0 V	760 A maximum 19.5 N·m (1.95 kg-m, 14.1 lb-ft) minimum	
	Magnetic switch operating voltage		8 volts maximum	

Tightening Torque Specification

Fastening part	Tightening torque		
	N•m	kg-m	lb-ft
Starting motor battery cable nut	10	1.0	7.5
Starting motor mount bolt and nut	45	4.5	32.5

Required Service Material

Material	Recommended SUZUKI product (Part Number)	Use
Lithium grease	SUZUKI SUPER GREASE A (99000-25010)	• Armature shaft (for 0.8 kW) • Over-running clutch (for 0.8 kW) • Armature shaft bushes (for 0.8 kW) • Drive lever (for 0.8 kW) • Front and rear bush (for 1.2 kW) • Plunger (for 1.2 kW) • Pinion drive lever (for 1.2 kW) • Internal gear (for 1.2 kW) • Planetary carrier shaft (for 1.2 kW) • Planetary gear (for 1.2 kW) • Ball (for 1.2 kW)

Special Tools

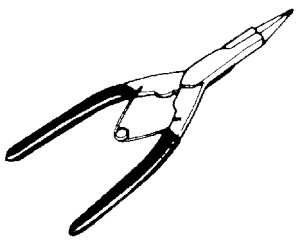	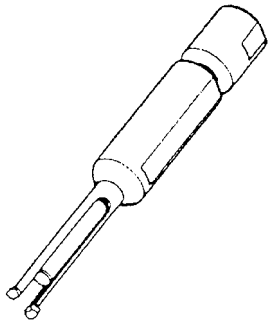	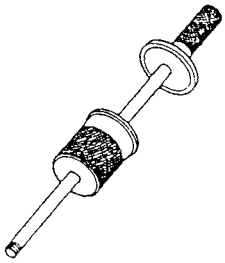
09900-06107 Snap ring pliers (Opening type)	09921-20200 Bearing remover	09930-30102 Sliding shaft

SECTION 6H

CHARGING SYSTEM

WARNING:

For vehicles equipped with Supplemental Restraint (Air Bag) System:

- **Service on and around the air bag system components or wiring must be performed only by an authorized SUZUKI dealer. Refer to "System Components and Wiring Location View" under "General Description" in Section 10B in order to confirm whether you are performing service on or near the air bag system components or wiring. Please observe all WARNINGS and "Service Precautions" under "On-Vehicle Service" in Section 10B before performing service on or around the air bag system components or wiring. Failure to follow WARNINGS could result in unintentional activation of the system or could render the system inoperative. Either of these two conditions may result in severe injury.**
- **Technical service work must be started at least 90 seconds after the ignition switch is turned to the "LOCK" position and the negative cable is disconnected from the battery. Otherwise, the system may be activated by reserve energy in the Sensing and Diagnostic Module (SDM).**

CONTENTS

General Description 6H-2
- Battery Description 6H-2
  - Carrier and hold-down 6H-2
  - Electrolyte freezing 6H-2
  - Sulfation 6H-2
  - Built-in indicator (if equipped) 6H-2
  - Care of battery 6H-3
- Generator Description 6H-4

Diagnosis 6H-5
- Battery Inspection 6H-5
  - Visual inspection 6H-5
  - Hydrometer test 6H-5
- Generator Symptom Diagnosis 6H-6
  - Charging indicator lamp operation 6H-6
  - Undercharged battery 6H-7
  - Overcharged battery 6H-8

On-Vehicle Service 6H-9
- Jump Starting in Case of Emergency 6H-9
  - With auxiliary (booster) battery 6H-9
  - With charging equipment 6H-9
- Battery Dismounting and Remounting 6H-10
  - Dismounting 6H-10
  - Handling 6H-10
  - Remounting 6H-10
- Generator belt Inspection and Adjustment 6H-10
- Generator Dismounting and Remounting 6H-11
- Generator Disassembly and Reassembly 6H-11
- Generator Inspection 6H-12

Specification 6H-13
- Battery 6H-13
- Generator 6H-13

Tightening Torque Specification 6H-14

General Description

Battery Description

The battery has three major functions in the electrical system.

- It is a source of electrical energy for cranking the engine.
- It acts as a voltage stabilizer for the electrical system.
- It can, for a limited time, provide energy when the electrical load exceeds the output of the generator.

Carrier and hold-down

The battery carrier should be in good condition so that it will support the battery securely and keep it level.
Before installing the battery, the battery carrier and hold-down clamp should be clean and free from corrosion and make certain there are no parts in carrier.
To prevent the battery from shaking in its carrier, the hold-down bolts should be tight enough but not over-tightened.

Electrolyte freezing

The freezing point of electrolyte depends on its specific gravity. Since freezing may ruin a battery, it should be protected against freezing by keeping it in a fully charged condition. If a battery is frozen accidentally, it should not be charged until it is warmed.

Sulfation

If the battery is allowed to stand for a long period in discharged condition, the lead sulfate becomes converted into a hard, crystalline substance, which will not easily turn back to the active material again during the subsequent recharging. “Sulfation” means the result as well as the process of that reaction. Such a battery can be revived by very slow charging and may be restored to usable condition but its capacity is lower than before.

Built-in indicator (if equipped)

The battery has a built-in temperature compensated indicator at the top of the battery. This indicator is to be used with the following diagnostic procedure. When checking the indicator, make sure that the battery has a clean top. A light may be needed in some poorly-lit areas.

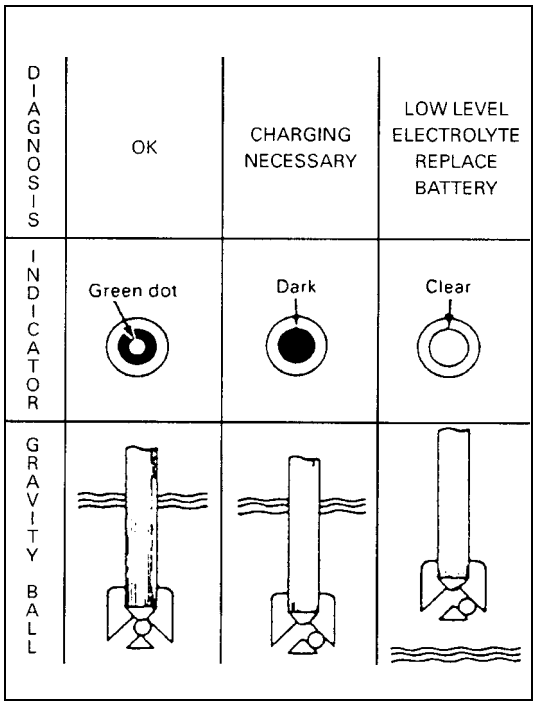

Three types of indication available under normal operation are as follows.

- Green Dot
  Battery is sufficiently charged for testing.
- Dark
  Battery must be charged before testing.
  If there is a cranking complaint, battery should be tested as described in “Diagnosis” section. Charging and electrical systems should also be checked at this time.
- Clear or Light Yellow
  This means that fluid level is below the bottom of hydrometer. Its possible cause is excessive or prolonged charging, a broken case, excessive tipping or normal battery deterioration. When the battery is found in such condition, it is possible that high charging voltage is caused by the faulty charging system and therefore, charging and electrical systems need to be checked. If there is a trouble in cranking and its cause lies in the battery, it should be replaced.

Care of battery

WARNING:

- **Never expose battery to open flame or electric spark because of battery generate gas which is flammable and explosive.**
- **Do not allow battery fluid to contact eyes, skin, fabrics, or painted surfaces as fluid is a corrosive acid. Flush any contacted area with water immediately and thoroughly.**
- **Batteries should always be kept out of reach of children.**

1) The battery is a very reliable component, but needs periodical attentions.
   - Keep the battery carrier clean
   - Prevent rust formation on the terminal posts
   - Keep the electrolyte up to the upper level uniformly in all cells.
   - When keeping battery on vehicle over a long period of time, follow instructions given below.
     – Weekly, start the engine and run it until it reaches normal operating temperature with engine speed of 2000 to 3000 rpm. Make sure all electric switches are off before storing the vehicle.
     – Recharge the battery twice a month to prevent it from discharging excessively. This is especially important when ambient temperature is low.
     The battery discharges even when it is not used, while vehicles are being stored. Battery electrolyte can freeze and battery case can crack at cold ambient condition if battery is not properly charged.
2) Keep the battery cable connections clean.
   The cable connections, particularly at the positive (+) terminal post, tend to become corroded. The product of corrosion, or rust, on the mating faces of conductors resists the flow of current.
   Clean the terminals and fittings periodically to ensure good metal-to-metal contact, and grease the connections after each cleaning to protect them against rusting.
3) Be always in the know as to the state of charge of the battery. The simplest way to tell the state of charge is to carry out a hydrometer test. The hydrometer is an instrument for measuring the specific gravity (S.G.) of the battery electrolyte. The S.G. of the electrolyte is indicative of the state of charge. Refer to “Hydrometer test” in this section.

Generator Description

The generator is a small and high performance type with an IC regulator incorporated.
The internal components are connected electrically as shown below figure.

The generator features are as follows:

- Solid state regulator is mounted inside the generator.
- All regulator components are enclosed into a solid mold.
- This unit along with the brush holder assembly is attached to the rear housing.
- The IC regulator uses integrated circuits and controls the voltage produced by the generator, and the voltage setting cannot be adjusted.
- The generator rotor bearings contain enough grease to eliminate the need for periodic lubrication. Two brushes carry current through the two slip rings to the field coil mounted on the rotor, and under normal conditions will provide long period of attention-free service.
- The stator windings are assembled on the inside of a laminated core that forms part of the generator frame.

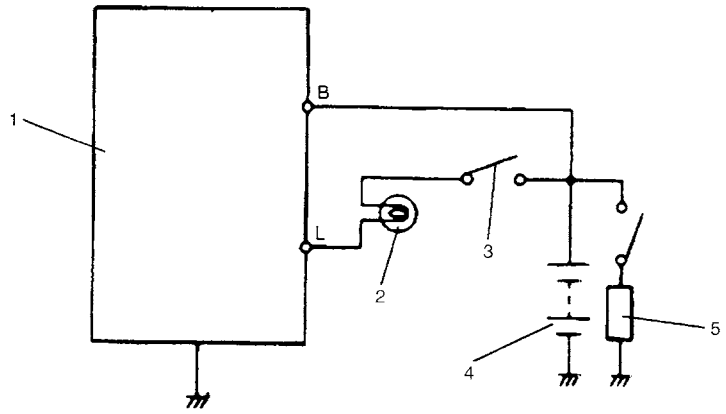

1. Generator with regulator assembly	3. Ignition switch	5. Load
2. Charge indicator light	4. Battery	

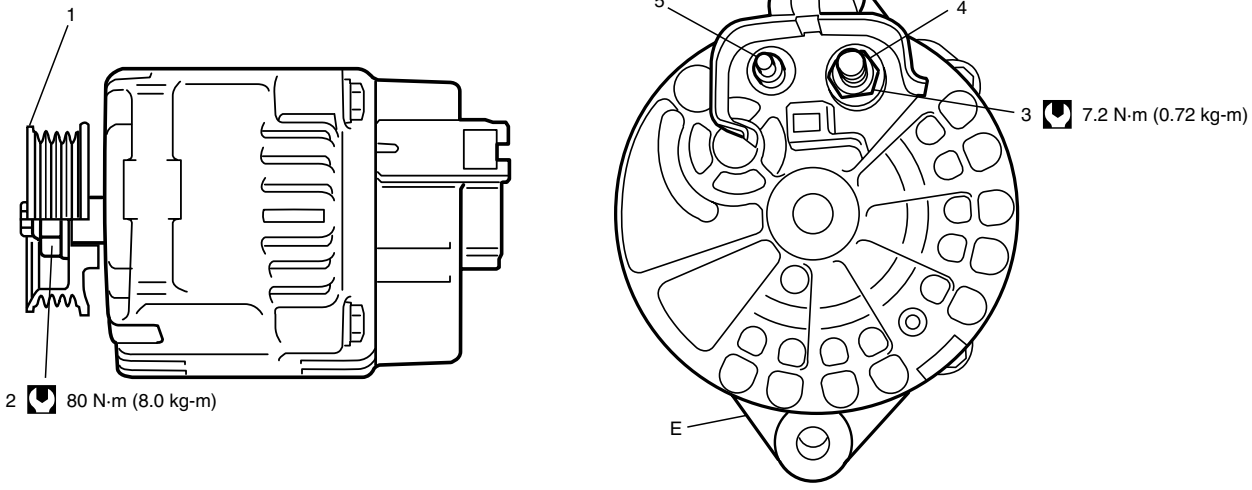

1. Pulley	3. "B" terminal inner nut	5. "L" terminal
2. Pulley nut	4. "B" terminal	Tightening torque

Diagnosis

Battery Inspection

Visual inspection

Check for obvious damage, such as cracked or broken case or cover, that could permit loss of electrolyte. If obvious damage is noted, replace battery. Determine cause of damage and correct as needed.

Hydrometer test

The direct method of checking the battery for state of charge is to carry out a high rate discharge test, which involves a special precise voltmeter and an expensive instrument used in the service shops, but not recommendable to the user of the vehicle.
At 20 °C of battery temperature (electrolyte temperature):

- The battery is in FULLY CHARGED STATE if the electrolyte S.G. is 1.280.
- The battery is in HALF CHARGED STATE if the S.G. is 1.220.
- The battery is in NEARLY DISCHARGED STATE if the S.G. is 1.150 and is in danger of freezing.

As the S.G. varies with the temperature, if battery temperature is not at 20°C (68°F), you have to correct your S.G. reading (taken with your hydrometer) to the value at 20°C (68°F) and apply the corrected S.G. value to the three-point guide stated value.
For the manner of correction, refer to the graph showing the relation between S.G. value and temperature as shown in the figure.

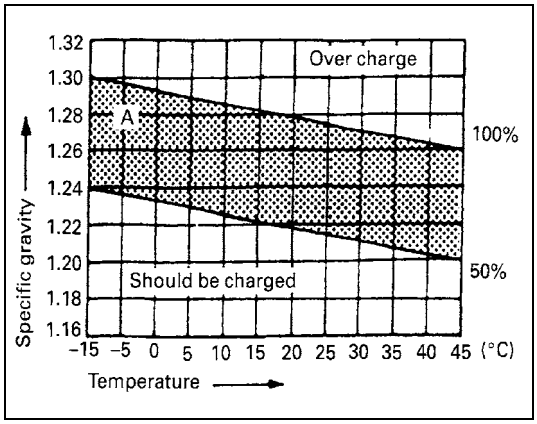

How to use the temperature-corrected state-of-charge graph

Suppose your S.G. reading is 1.28 and the battery temperature is –5°C (23°F). Locate the intersection of the –5°C line and the 1.28 S.G. line.
The intersection is within the “A” zone (shaded area in the graph) and that means CHARGED STATE.
To know how much the battery is charged, draw a line parallel to the zone demarcation line and extend it to the right till it meets with the percentage scale. In the present example, the line meets at about 85% point on the percentage scale. Therefore, the battery is charged up to the 85% level.

Generator Symptom Diagnosis

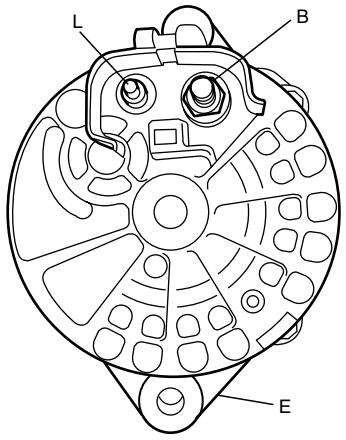

CAUTION:

- **Do not connect any load between L and E.**
- **When connecting charger or booster battery to vehicle battery, refer to "Jump Starting in Case of Emergency" in this section.**

Trouble in charging system will show up as one or more of the following conditions:

1) Faulty indicator lamp operation.
2) An undercharged battery as evidenced by slow cranking or indicator dark.
3) An overcharged battery as evidenced by excessive spewing of electrolyte from vents.

Noise from generator may be caused by loose drive pulley, loose mounting bolts, worn or dirty bearings, defective diode, or defective stator.

B: Generator output (Battery terminal)
E: Ground
L: Lamp terminal

Charging indicator lamp operation

Condition	Possible Cause	Correction
Charge light does not light with ignition ON and engine off	Fuse blown	Check fuse.
	Light burned out	Replace light.
	Wiring connection loose	Tighten loose connection.
	IC regulator or field coil faulty	Check generator.
Charge light does not go out with engine running (battery requires frequent recharging)	Drive belt loose or worn	Adjust or replace drive belt.
	IC regulator or generator faulty	Check charging system.
	Wiring faulty	Repair wiring.
Noise from radio	Condenser faulty	Replace IC regulator assembly.

Undercharged battery

This condition, as evidenced by slow cranking or low specific gravity can be caused by one or more of the following conditions even though indicator lamp may be operating normal.
Following procedure also applies to cars with voltmeter and ammeter.

- Make sure that undercharged condition has not been caused by accessories left on for extended period of time.
- Check drive belt for proper tension.
- If battery defect is suspected, refer to “Battery Description” in this section.
- Inspect wiring for defects. Check all connections for tightness and cleanliness, battery cable connections at battery, starting motor and ignition ground cable.

NO-LOAD CHECK

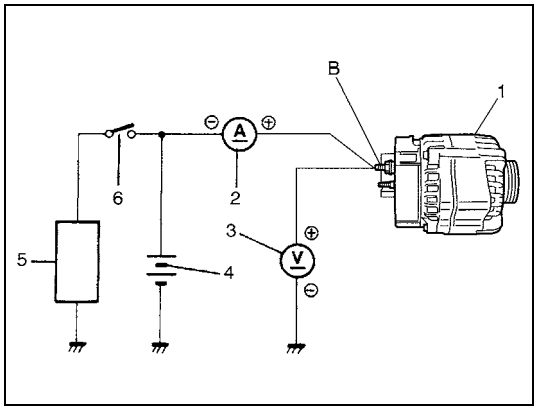

1) Connect voltmeter and ammeter as shown in the figure.

NOTE:

Use fully charged battery.

1.	Generator
2.	Ammeter (between generator (B) terminal and battery (+) terminal)
3.	Voltmeter (between generator (B) terminal and ground)
4.	Battery
5.	Load
6.	Switch

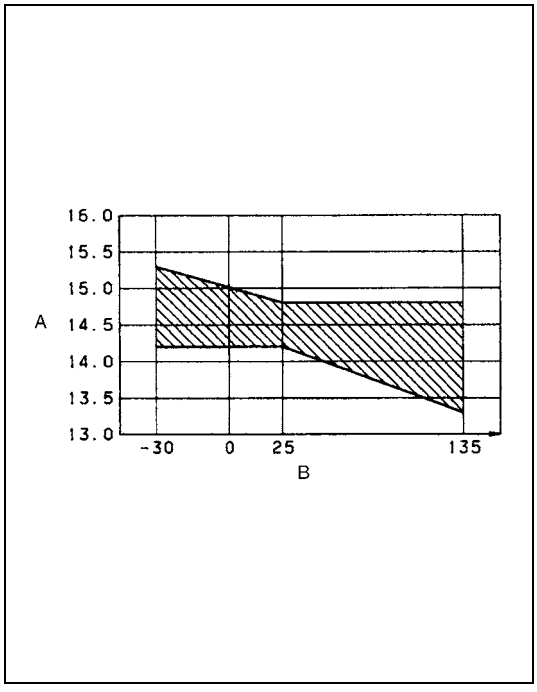

2) Run engine from idling up to 2,000 rpm with all accessories turned off and read meters.
If voltage is higher than standard value, check ground of brushes.
If brushes are not grounded, replace IC regulator.
If voltage is lower than standard value, proceed to following check.

Specification for undercharged battery (No-load check)
Current: 10 A
Standard voltage: 14.2 – 14.8 V at 20°C (68°F)

NOTE:

Consideration should be taken that voltage will differ somewhat with regulator case temperature as shown in the figure.

A:	Regulated voltage (V)
B:	Heatsink temperature (°C)

LOAD CHECK

1) Run engine at 2,000 rpm and turn on head light and heater motor.
2) Measure current and if it is less than 20 A repair or replace generator.

Overcharged battery

1) To determine battery condition, refer to “Battery Description” in this section.
2) If obvious overcharge condition exists as evidenced by excessive spewing of electrolyte, measure generator B terminal voltage at engine 2,000 rpm.
3) If measured voltage is higher than upper limit value, disassemble generator.
4) Check ground of brushes. If brushes are not grounded, replace IC regulator. Then check field coil for grounds and shorts.

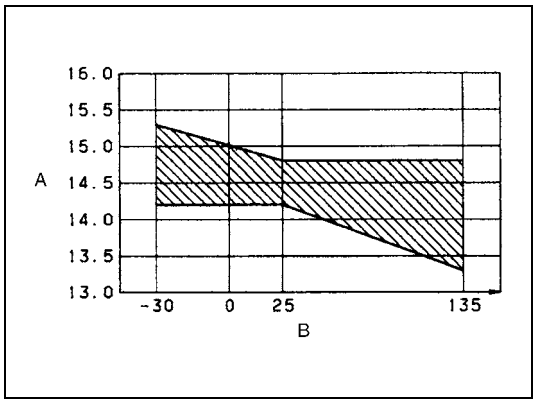

A: Regulated voltage (V)
B: Heatsink temperature (°C)

On-Vehicle Service

Jump Starting in Case of Emergency

With auxiliary (booster) battery

CAUTION:

If vehicle is manual transmission model and has a catalytic converter, do not push or tow it to start. Damage to its emission system and/or to other parts may result.

Both booster and discharged battery should be treated carefully when using jumper cables. Follow procedure outlined below, being careful not to cause sparks.

WARNING:

- **Departure from these conditions or procedure described below could result in:**
  - **Serious personal injury (particularly to eyes) or property damage from such causes as battery explosion, battery acid, or electrical burns.**
  - **Damage to electronic components of either vehicle.**
- **Remove rings, watches, and other jewelry. Wear approved eye protection.**
- **Be careful so that metal tools or jumper cables do not contact positive battery terminal (or metal in contact with it) and any other metal on vehicle, because a short circuit could occur.**

WARNING:

Do not connect negative cable directly to negative terminal of dead battery.

1) Set parking brake and place NEUTRAL on manual transmission (automatic transmission in PARK). Turn off ignition, turn off lights and all other electrical loads.
2) Check electrolyte level. If it is below low level line, add distilled water.
3) Attach end of one jumper cable to positive terminal of booster battery and the other end of the same cable to positive terminal of discharged battery. (Use 12-volt battery only to jump start engine).
4) Attach one end of the remaining negative cable to negative terminal of booster battery, and the other end to a solid engine ground (such as exhaust manifold) at least 45 cm (18 in.) away from battery of vehicle being started.
5) Start engine of vehicle with booster battery and turn off electrical accessories. Then Start engine of the vehicle with discharged battery.
6) Disconnect jumper cables in the exact reverse order.

With charging equipment

CAUTION:

When jump starting engine with charging equipment, be sure equipment used is 12-volt and negative ground. Do not use 24-volt charging equipment. Using such equipment can cause serious damage to electrical system or electronic parts.

Battery Dismounting and Remounting

Dismounting

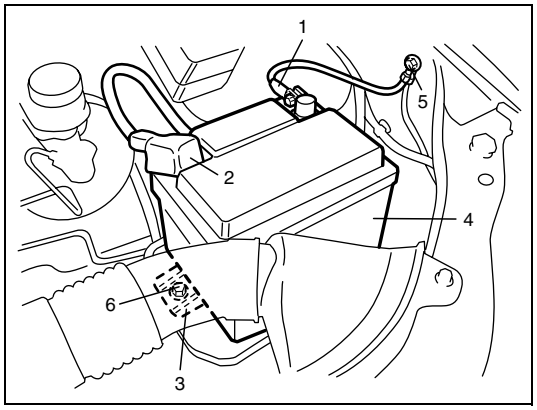

1) Disconnect negative cable (1).
2) Disconnect positive cable (2).
3) Remove retainer (3).
4) Remove battery (4).

5.	Body ground bolt
6.	Retainer bolt

Handling

When handling battery, following safety precautions should be followed:

- Hydrogen gas is produced by battery. A flame or spark near battery may cause the gas to ignite.
- Battery fluid is highly acidic. Avoid spilling on clothing or other fabric. Any spilled electrolyte should be flushed with large quantity of water and cleaned immediately.

Remounting

1) Reverse removal procedure.
2) Torque battery cables to specification.

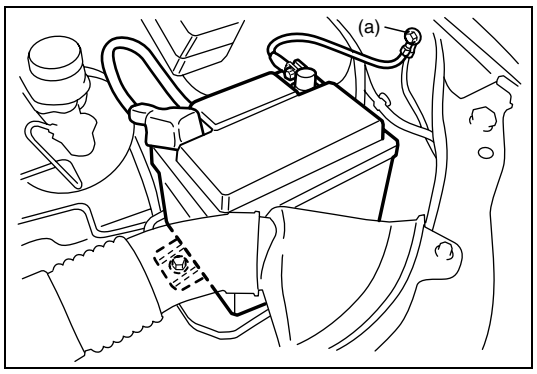

NOTE:

Check to be sure that ground cable has enough clearance to hood panel by terminal.

Tightening torque
Body ground bolt (a): 8.0 N·m (0.8 kg-m, 6.0 lb-ft)

Generator belt Inspection and Adjustment

For removal, installation, inspection and adjustment referring to “Water Pump/Generator Drive Belt Tension Inspection and Adjustment” in Section 6B.

Generator Dismounting and Remounting

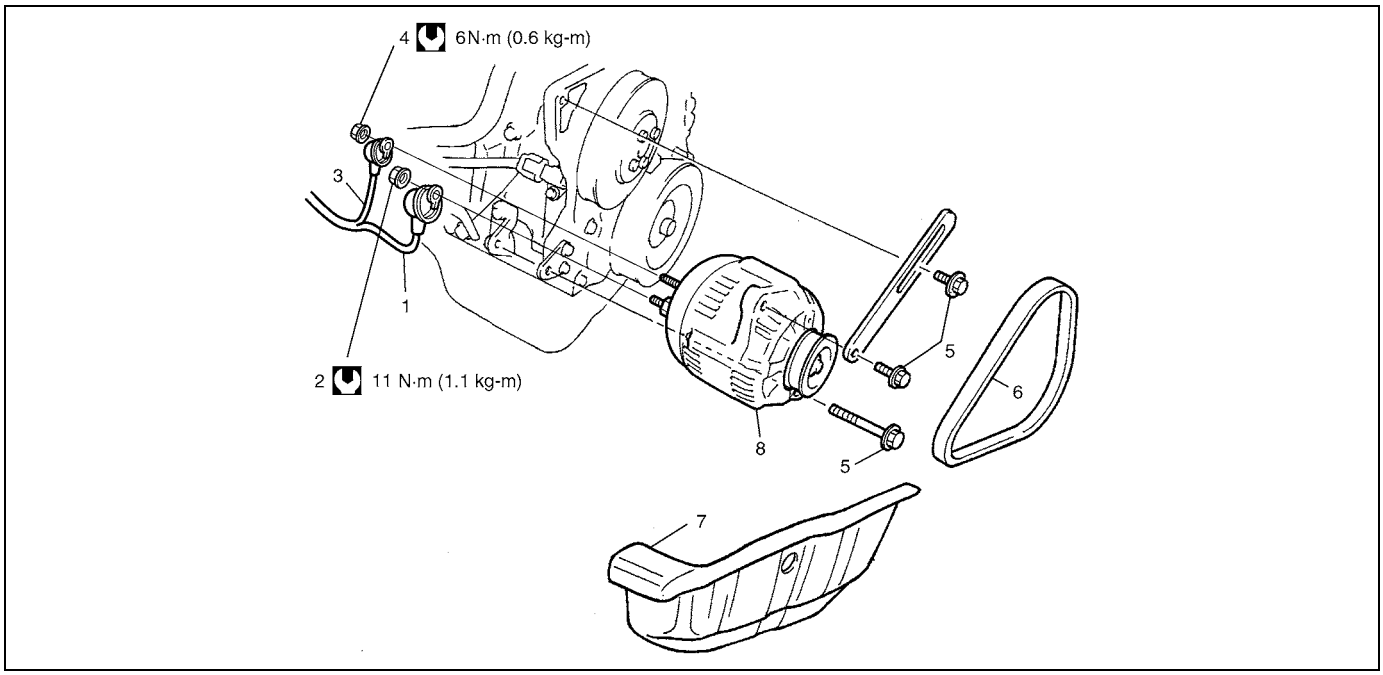

1. "B" terminal wire	3. "L" terminal wire	5. Generator bolt	7. Splash cover	Tightening torque
2. "B" terminal nut	4. "L" terminal nut	6. Generator belt	8. Generator	

Generator Disassembly and Reassembly

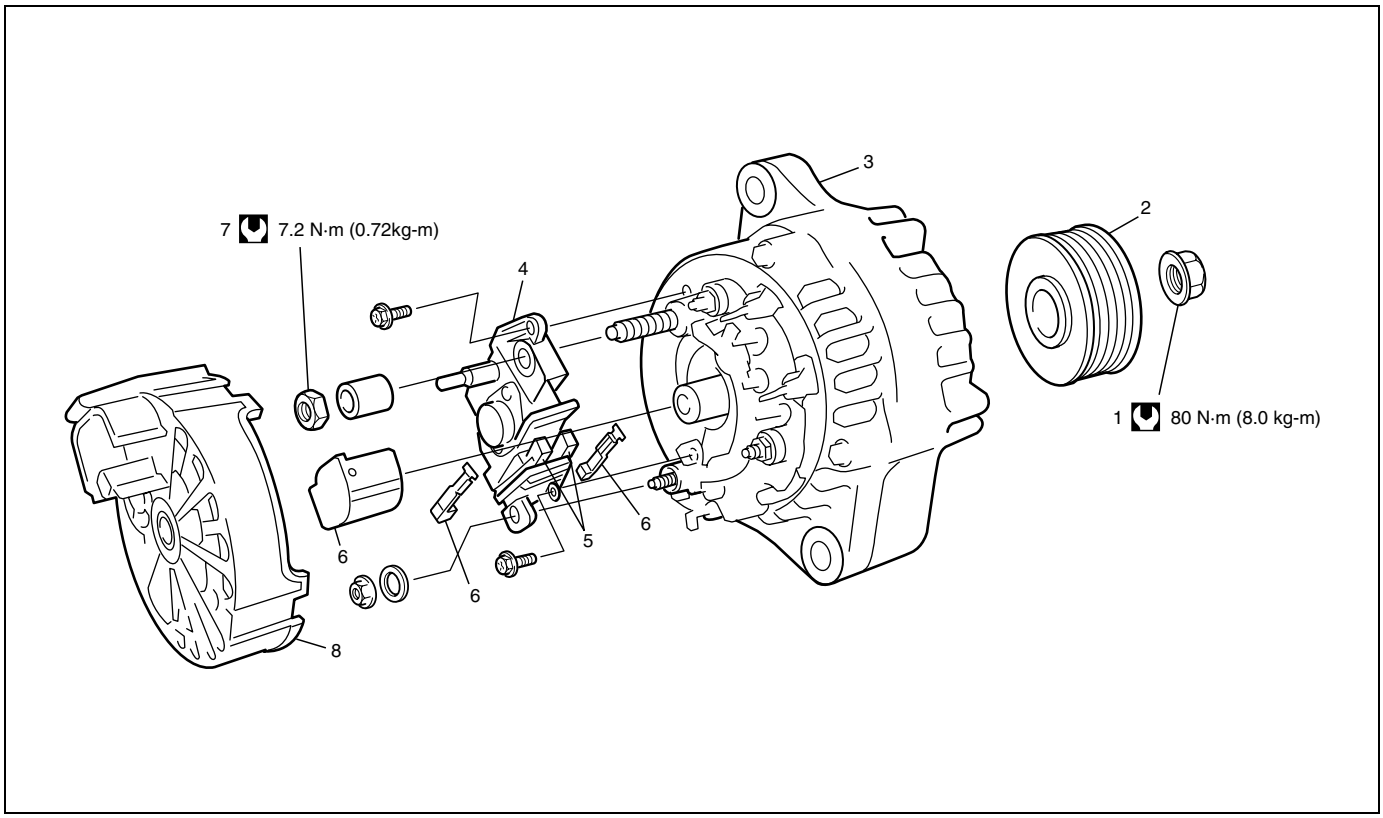

1. Pulley nut	3. Generator assy	5. Brush	7. "B" terminal inner nut	Tightening torque
2. Pulley	4. Brush holder	6. Brush holder cover	8. Rear end cover	

Generator Inspection

ROTOR

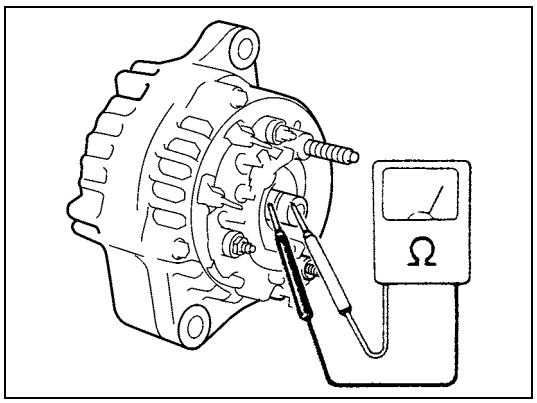

1) Using ohmmeter, check for continuity between slip rings of rotor. If there is no continuity, replace rotor.

Standard resistance between slip rings of rotor
2.7 – 3.1 Ω at 20°C (68°F)

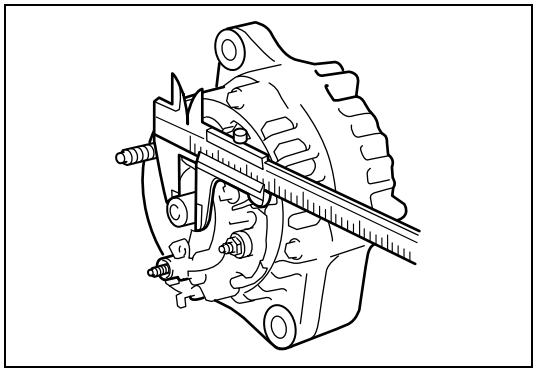

2) Check slip rings for roughness or scoring. If rough or scored, replace rotor.
Using a vernier caliper, measure the slip ring diameter.
If the diameter is less than minimum, replace the rotor.

Slip ring diameter
Standard: 16.1 – 16.3 mm (0.634 – 0.642 in.)
Limit: 15.0 mm (0.591 in.)

BRUSH

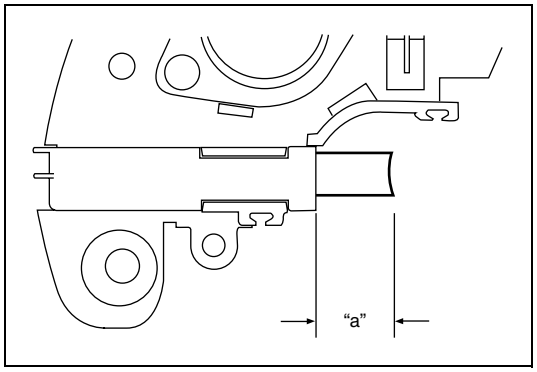

Check each brush for wear by measuring its length as shown. If brush is found worn down to service limit, replace brush.

Exposed brush length "a"
Standard: 12.5 mm (0.492 in.)
Limit: 2.5 mm (0.098 in.)

Specification

Battery

NOTE:

The battery used in each vehicle is one of the following two types, depending on specification.

Battery type	CCA 180A	CCA 210A
Nominal output	12 V	
Rated capacity	36 Ah/20 h	44 Ah/20 h
	28 Ah/5 h	36 Ah/5 h
Cold cranking amperes	180 A (DIN)	210 A (DIN)
Electrolyte	3.8 L (8.03/6.69 US/Imp pt)	
Electrolyte specified gravity	1.28 when fully charged at 25°C (77°F)	
Battery dimension	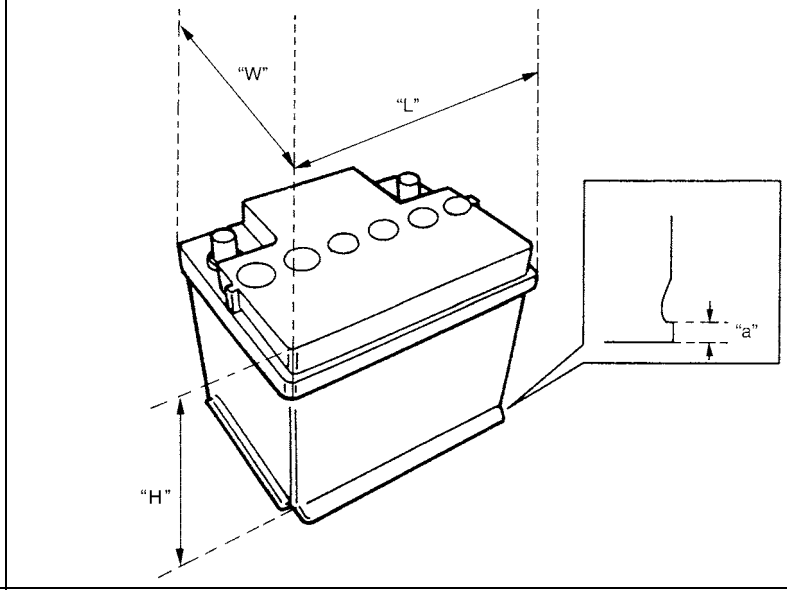	

"L": 209 – 211 mm (8.23 – 8.31 in.)	"H": 172 – 175 mm (6.77 – 6.89 in.)
"W": 173 – 175 mm (6.81 – 6.89 in.)	"a": 10.5 mm (0.41 in.)

Generator

Type	70 A type
Rated voltage	12 V
Nominal output	70 A
Permissible max. speed	18000 r/min.
No-load speed	1230 r/min (rpm)
Setting voltage	14.2 to 14.8 V
Permissible ambient temperature	–30 to 90°C (–22 to 194°F)
Polarity	Negative ground
Rotation	Clockwise viewed from pulley side

Tightening Torque Specification

Fastening part	Tightening torque		
	N•m	kg-m	lb-ft
Body ground bolt	8	0.8	6.0
“B” terminal inner nut	4.2	0.42	3.0
“B” terminal outer nut	11	1.1	8.0
“L” terminal outer nut	6	0.6	4.5
Pulley nut	111	11.1	80.5

SECTION 6K

EXHAUST SYSTEM

CONTENTS

General Description 6K-2
Maintenance 6K-2
On-Vehicle Service 6K-3
Exhaust System Components 6K-3
Exhaust Manifold Removal and Installation 6K-4
Exhaust Manifold Inspection 6K-4
Exhaust Pipe Removal and Installation 6K-4
Tightening Torque Specification 6K-4

General Description

The exhaust system consists of an exhaust manifold, three-way catalytic converter (TWC) in catalyst case, exhaust pipes, a muffler and seals, gasket and etc.
The three-way catalytic converter is an emission control device added to the exhaust system to lower the levels of Hydrocarbon (HC), Carbon Monoxide (CO), and Oxides of Nitrogen (NOx) pollutants in the exhaust gas.

Maintenance

WARNING:
To avoid the danger of being burned, do not touch the exhaust system when the system is hot. Any service on the exhaust system should be performed when the system is cool.

At every interval of periodic maintenance service, and when vehicle is raised for other service, check exhaust system as follows:

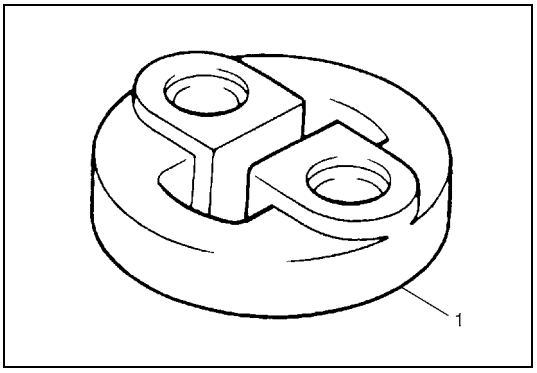

- Check rubber mountings (1) for damage, deterioration, and out of position.
- Check exhaust system for leakage, loose connection, dent and damage.
- If bolts or nuts are loosened, tighten them to specified torque referring to “Exhaust System Components” in this section.
- Check nearby body areas damaged, missing, or mispositioned part, open seam, hole connection or any other defect which could permit exhaust fumes to seep into vehicle.

- Make sure that exhaust system components have enough clearance from underbody to avoid overheating and possible damage to passenger compartment carpet.
- Any defect should be fixed at once.

On-Vehicle Service

Exhaust System Components

WARNING:

To avoid the danger of being burned, do not touch the exhaust system when the system is hot. Any service on the exhaust system should be performed when the system is cool.

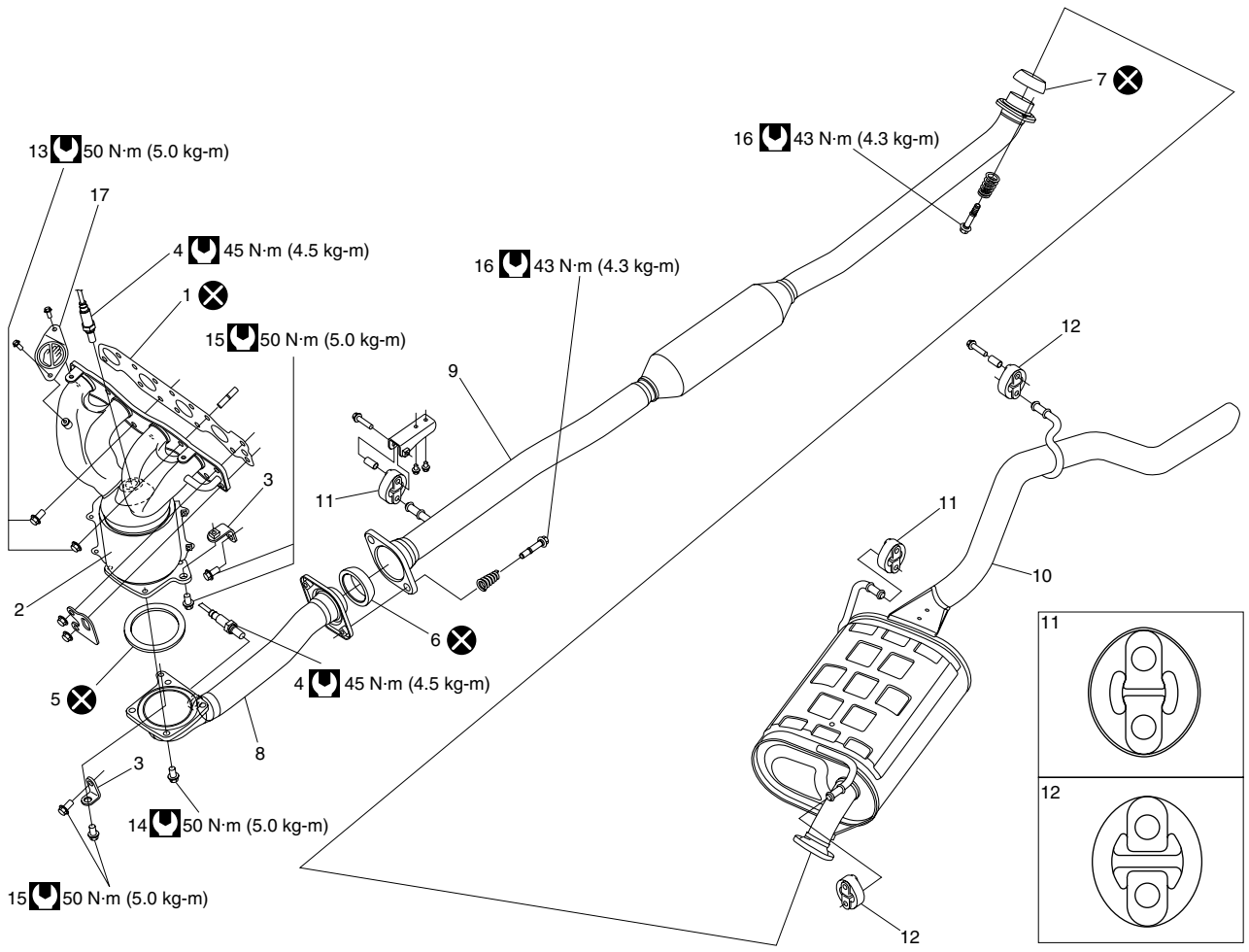

1. Gasket	8. Exhaust No.1 pipe	15. Exhaust manifold stiffener bolt
2. Exhaust manifold	9. Exhaust No.2 pipe	16. Exhaust No.2 pipe bolt
3. Exhaust manifold stiffener	10. Muffler	17. Caution plate
4. Oxygen sensor	11. Muffler mounting type 1	Tightening torque
5. Exhaust pipe gasket	12. Muffler mounting type 2	Do not reuse.
6. Seal ring No.1	13. Exhaust manifold bolt and nut	
7. Seal ring No.2	14. Exhaust No.1 pipe bolt	

Exhaust Manifold Removal and Installation

Removal and installation

Refer to “Exhaust Manifold Removal and Installation” in Section 6A1.

Exhaust Manifold Inspection

Check gasket and seal for deterioration or damage.
Replace them as necessary.

Exhaust Pipe Removal and Installation

Removal and installation

For replacement of exhaust pipe, be sure to hoist vehicle and observe “Warning” under “Maintenance” in this section and the following.

CAUTION:
Exhaust manifold have three way catalytic converter in it, it should not be exposed to any impulse. Be careful not to drop it or hit it against something.

- Tighten bolts and nuts to specified torque when reassembling referring to “Exhaust System Components” in this section.
- After installation, start engine and check each joint of exhaust system for leakage.

Tightening Torque Specification

Fastening part	Tightening torque		
	N•m	kg-m	lb-ft
Exhaust manifold bolts and nuts	50	5.0	36.5
Exhaust No.1 pipe bolts	50	5.0	36.5
Exhaust manifold stiffer bolts	50	5.0	36.5
Exhaust No.2 pipe bolts	43	4.3	31.5

SECTION 7A1

MANUAL TRANSAXLE

WARNING:

For vehicles equipped with a Supplemental Restraint (Air Bag) System :

- **Service on and around the air bag system components or wiring must be performed only by an authorized SUZUKI dealer. Refer to "System Components and Wiring Location View" under "General Description" in air bag system section in order to confirm whether you are performing service on or near the air bag system components or wiring. Please observe all WARNINGS and "Service Precautions" under "On-Vehicle Service" in air bag system section before performing service on or around the air bag system components or wiring. Failure to follow WARNINGS could result in unintentional activation of the system or could render the system inoperative. Either of these two conditions may result in severe injury.**
- **Technical service work must be started at least 90 seconds after the ignition switch is turned to the "LOCK" position and the negative cable is disconnected from the battery. Otherwise, the system may be activated by reserve energy in the Sensing and Diagnostic Module (SDM).**

CONTENTS

General Description 7A1-2
- Manual Transaxle Construction and Servicing 7A1-2
- Transaxle for 2WD Model 7A1-3
- Transaxle for 4WD Model 7A1-4

Diagnosis 7A1-5
- Manual Transaxle Symptom Diagnosis 7A1-5

On-Vehicle Service 7A1-6
- Manual Transaxle Oil Change 7A1-6
- Differential Side Oil Seal Replacement 7A1-6
- Gear Shift Control Lever and Cable Components 7A1-8
- Gear Shift Control Lever and Cable Removal and Installation 7A1-9
- Gear Shift Control Lever and Cable Adjustment 7A1-10
- Vehicle Speed Sensor (VSS) Removal and Installation 7A1-11
- Back Up Lamp Switch Removal and Installation 7A1-12
- Back Up Lamp Switch Inspection 7A1-12

Unit Repair Overhaul 7A1-13
- Transaxle Unit Components 7A1-13
- Transaxle Unit Dismounting and Remounting 7A1-14
- Transaxle Case Components 7A1-16
- Gear Shift and Select Shaft Assembly Components 7A1-17
- Gear Shift and Select Shaft Assembly Removal and Installation 7A1-17
- Gear Shift and Select Shaft Disassembly and Assembly 7A1-19
- Fifth Gear Disassembly and Assembly 7A1-19
- Gear Shift Shaft, Input Shaft and Counter Shaft Removal and Installation 7A1-24
- Transaxle Case Disassembly and Assembly 7A1-28
- Input & Counter Shaft Components 7A1-30
- Input Shaft Disassembly and Assembly 7A1-31
- Counter Shaft Disassembly and Assembly 7A1-34
- Gear Shift Shaft Components 7A1-38
- High Speed and Low Speed Gear Shift Shafts Inspection 7A1-39
- 5th & Reverse Gear Shift Shafts Disassembly and Assembly 7A1-39
- Differential Components 7A1-40
- Differential Disassembly and Assembly 7A1-41
- Differential Adjustment 7A1-42

Tightening Torque Specification 7A1-44

Required Service Material 7A1-45

Special Tool 7A1-45

General Description

Manual Transaxle Construction and Servicing

The transaxle provides five forward speeds and one reverse speed by means of three synchronizers and three shafts-input shaft, countershaft and reverse gear shaft. All forward gears are in constant mesh, and reverse uses a sliding idler gear arrangement.

The low speed synchronizer is mounted on counter shaft and engaged with counter shaft first gear or second gear, while the high speed synchronizer is done on input shaft and engaged with input shaft third gear or fourth gear.

The fifth speed synchronizer on input shaft is engaged with input shaft fifth gear mounted on the input shaft.

The double cone synchronizing mechanism is provided to 2nd gear synchromesh device for high performance of shifting to 2nd gear.

The countershaft turns the final gear and differential assembly, thereby turning the front drive shafts which are attached to the front wheels.

4WD model is equipped with transfer assembly on transaxle being mated to right side of differential output in transaxle.

For servicing, it is necessary to use genuine sealant or its equivalent on mating surfaces of transaxle case which is made of aluminum. The case fastening bolts must be tightened to specified torque by means of torque wrench. It is also important that all parts are thoroughly cleaned with cleaning fluid and air dried before reassembling.

Further, care must be taken to adjust preload of counter shaft taper roller bearings. New synchronizer rings are prohibited from being lapped with respective gear cones by using lapping compound before they are assembled.

Transaxle for 2WD Model

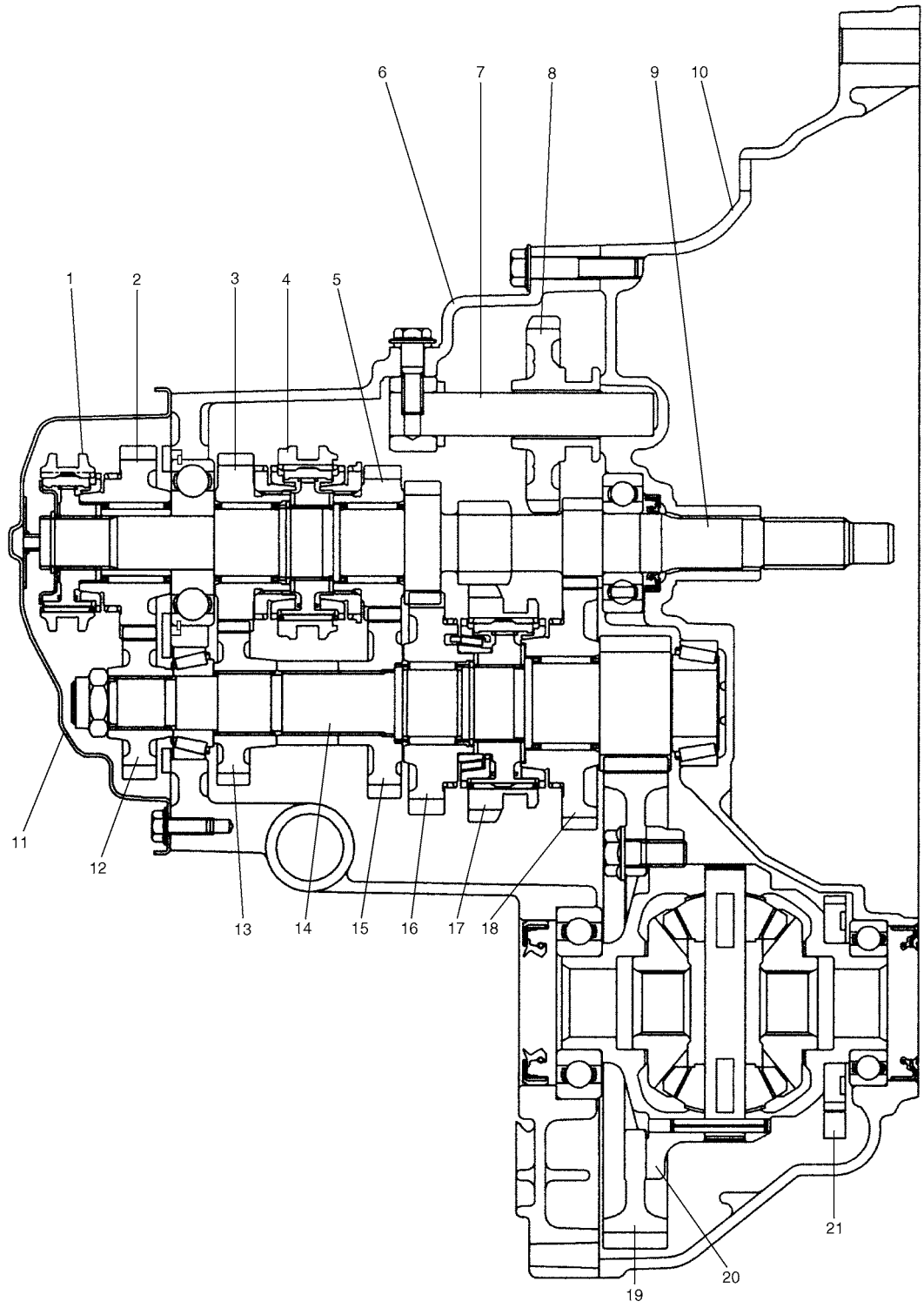

1. 5th speed sleeve & hub	8. Reverse idler gear	15. Countershaft 3rd gear
2. Input shaft 5th gear	9. Input shaft	16. Countershaft 2nd gear
3. Input shaft 4th gear	10. Right case	17. Low speed sleeve & hub
4. High speed sleeve & hub	11. Side cover	18. Countershaft 1st gear
5. Input shaft 3rd gear	12. Countershaft 5th gear	19. Final gear
6. Left case	13. Countershaft 4th gear	20. Differential case
7. Reverse gear shaft	14. Countershaft	21. Vehicle speed sensor

Transaxle for 4WD Model

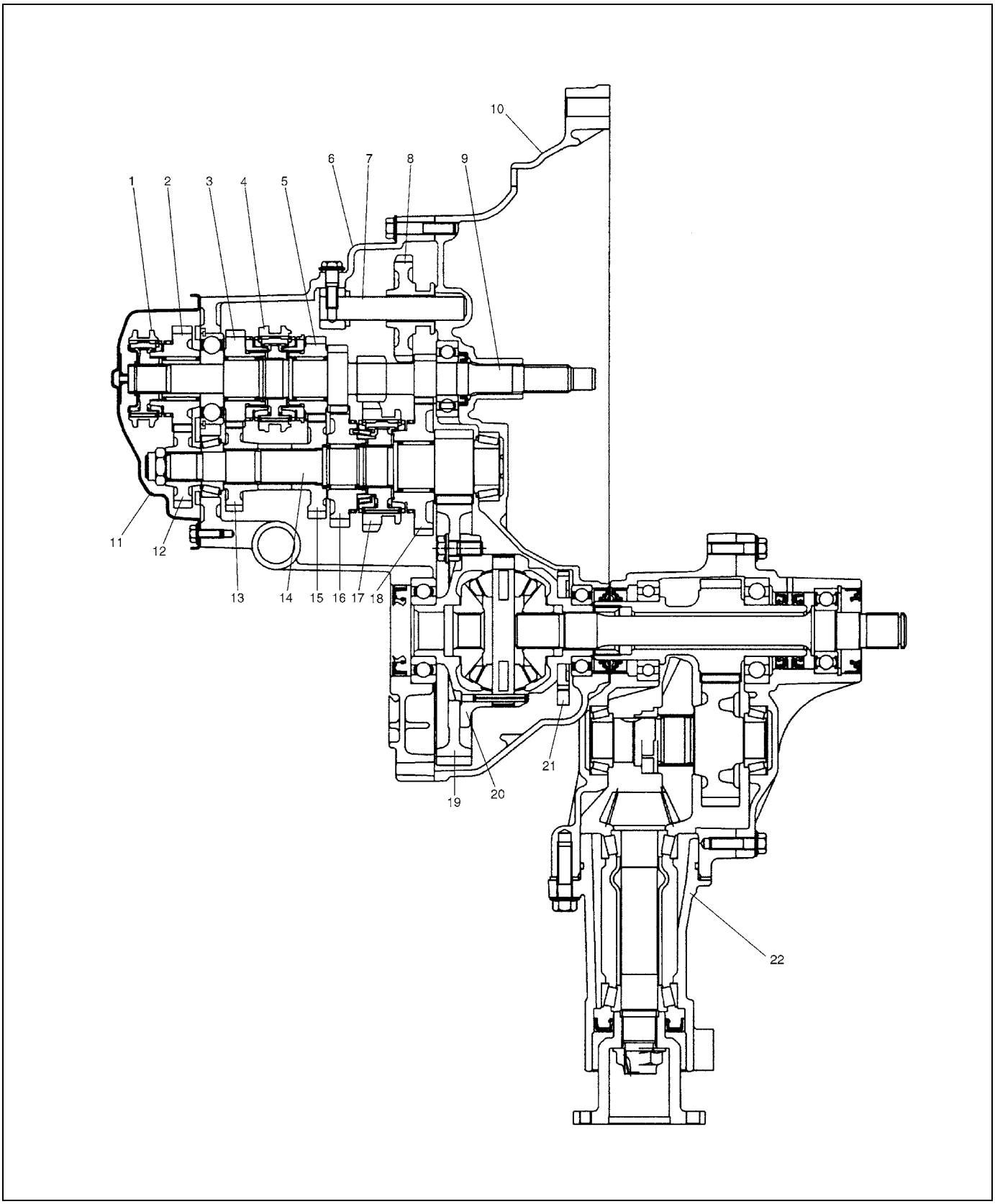

1. 5th speed sleeve & hub	7. Reverse gear shaft	13. Countershaft 4th gear	19. Final gear
2. Input shaft 5th gear	8. Reverse idler gear	14. Countershaft	20. Differential case
3. Input shaft 4th gear	9. Input shaft	15. Countershaft 3rd gear	21. Vehicle speed sensor
4. High speed sleeve & hub	10. Right case	16. Countershaft 2nd gear	22. Transfer assembly
5. Input shaft 3rd gear	11. Side cover	17. Low speed sleeve & hub	
6. Left case	12. Countershaft 5th gear	18. Countershaft 1st gear	

Diagnosis

Manual Transaxle Symptom Diagnosis

Condition	Possible Cause	Correction
Gears slipping out of mesh	Maladjusted gear shift/select control cables	Adjust.
	Worn shift fork shaft	Replace.
	Worn shift fork or synchronizer sleeve	Replace.
	Weak or damaged locating springs	Replace.
	Worn bearings on input shaft or counter shaft	Replace.
	Worn chamfered tooth on sleeve and gear	Replace sleeve and gear.
Hard shifting	Maladjusted gear shift/select control cables	Adjust.
	Inadequate or insufficient lubricant	Replenish.
	Improper clutch pedal free travel	Adjust.
	Distorted or broken clutch disc	Replace.
	Damaged clutch pressure plate	Replace clutch cover.
	Worn synchronizer ring	Replace.
	Worn chamfered tooth on sleeve or gear	Replace sleeve or gear.
	Worn gear shift/select control cables joint	Replace.
	Distorted shift shaft	Replace.
Noise	Inadequate or insufficient lubricant	Replenish.
	Damaged or worn bearing(s)	Replace.
	Damaged or worn gear(s)	Replace.
	Damaged or worn synchronizer parts	Replace.
	Maladjusted backlash between bevel pinion and gear	Adjust as prescribed
	Improper tooth contact in the mesh between bevel pinion and gear	Adjust or replace

On-Vehicle Service

CAUTION:
Do not reuse circlip, spring pin, E-ring, oil seal, gasket, self locking nut and specified parts. Reuse of it can result in trouble.

Manual Transaxle Oil Change

1) Before changing or inspecting oil, be sure to stop engine and lift vehicle horizontally.
2) With vehicle lifted up, check oil level and leakage.
   If leakage exists, correct it.
3) Drain old oil and fill new specified oil by specified amount (up to level hole).
4) Apply sealant to thread of drain plug (2) and level/filler plug (3) and torque them as specified below.

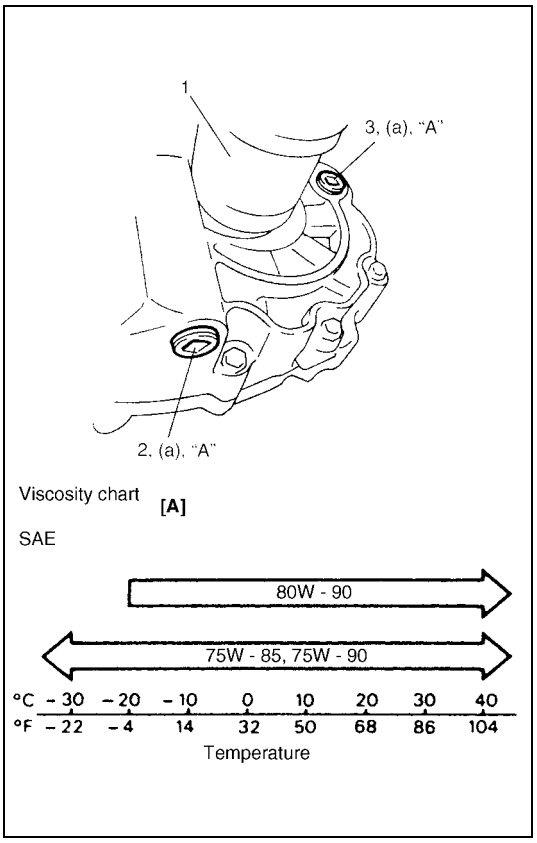

"A" : Sealant 99000-31110

Tightening torque
Transaxle oil level/filler and drain plugs
(a) : 21 N·m (2.1 kg-m, 15.5 lb-ft)

NOTE:

- **It is highly recommended to use API GL-4 75W-90 gear oil.**
- **Whenever vehicle is hoisted for any other service work than oil change, also be sure to check for oil leakage.**

Transaxle oil
: API GL-4
For SAE classification, refer to viscosity chart [A] in the figure.

Transaxle oil capacity
: 2.2 liters (4.6/3.9 US/Imp. pt)

1. Drive shaft (LH)

Differential Side Oil Seal Replacement

Replacement

1) Lift up vehicle and drain transaxle oil.
2) Remove front drive shafts referring to "Front Drive Shaft Assembly Removal and Installation" in Section 4A.
3) Separate transfer from transaxle assembly. (for 4WD vehicle)
   For detail, refer to "Transfer Dismounting and Mounting" in Section 7D.

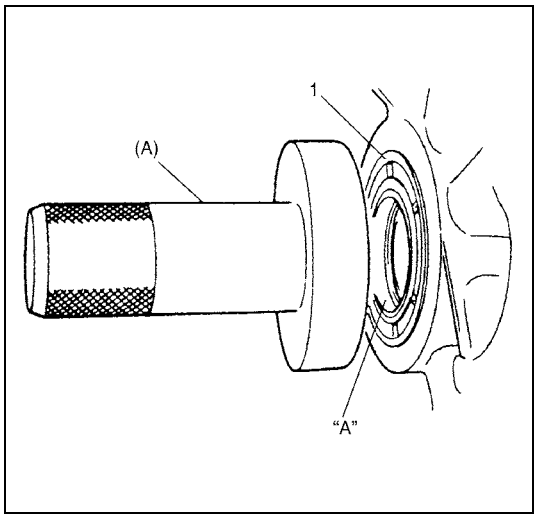

4) Remove oil seal (1) and install a new one until it becomes flush with case surface using special tool and hammer.

NOTE:

When installing oil seal, face its spring side inward.

Special tool
(A) : 09913-75510 (2WD and LH of 4WD)
(A) : 09951-46010 (RH of 4WD)

5) Apply grease to oil seal lip and at the same time check drive shaft where oil seal contacts and make sure of its smoothness.

"A" : Grease 99000-25010

6) Install transfer referring to "Transfer Dismounting and Mounting" in Section 7D.
7) Insert front drive shafts referring to "Front Drive Shaft Assembly Removal and Installation" in Section 4A.
8) Install ball stud and stabilizer mount brackets referring to "Wheel Hub and Steering Knuckle Removal and Installation" and "Stabilizer Bar and Bushings Removal and Installation" in Section 3D.
9) Install tie-rod end referring to "Tie Rod End Removal and Installation" in Section 3B.
10) Fill transaxle oil as specified referring to "Manual Transaxle Oil Change" in this section, and make sure that oil has been sealed with oil seal.

Gear Shift Control Lever and Cable Components

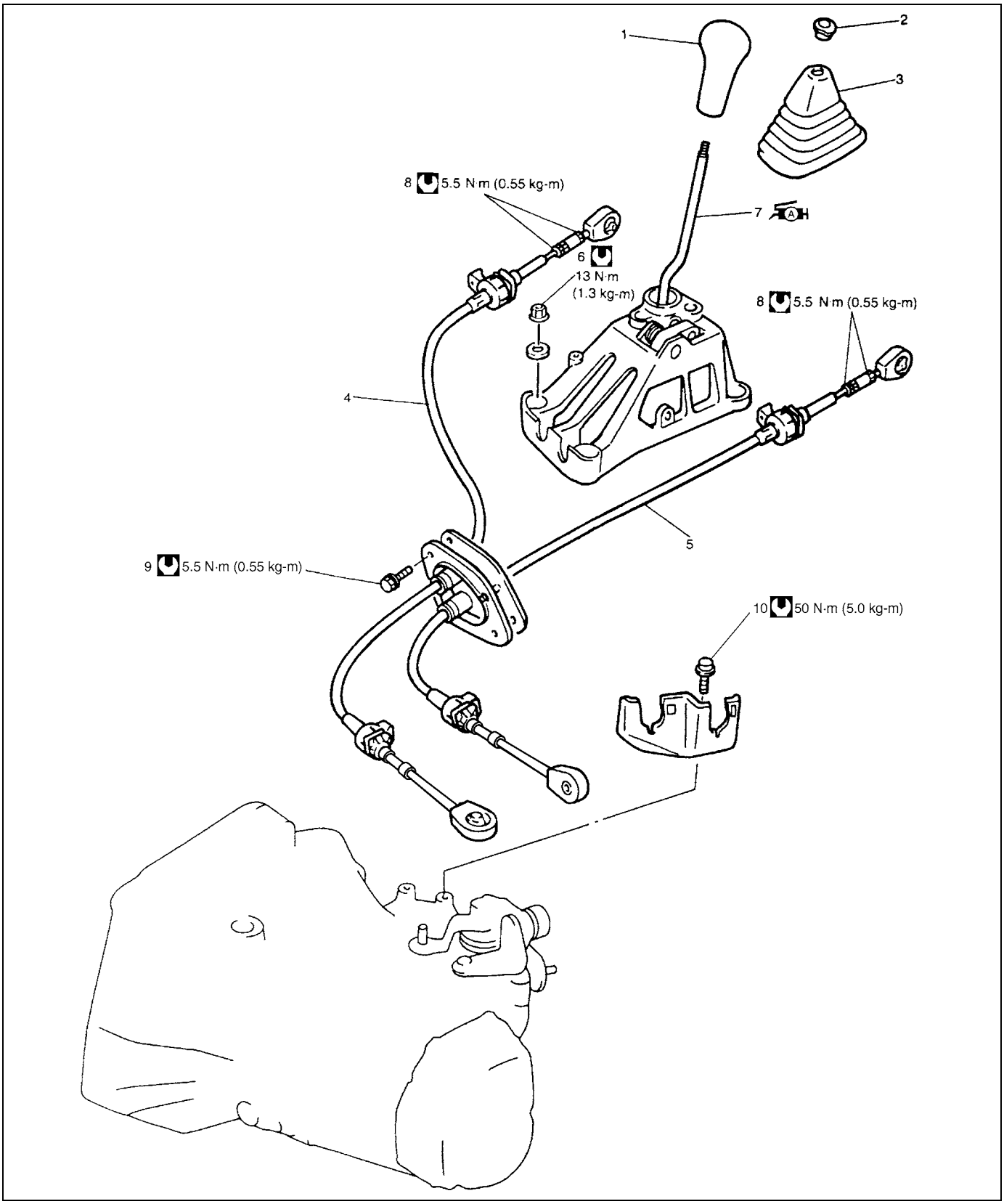

1. Gear shift control lever knob	5. Gear select control cable	9. Cable mounting bolt
2. Lever boot holder	6. Gear shift control lever assembly mounting nut	10. Cable bracket bolt
3. Gear shift lever boot	A H 7. Gear shift control lever assembly : Apply grease 99000-25010 to pin ends to which shift and select cables are connected.	Tightening torque
4. Gear shift control cable	8. Cable lock nut	

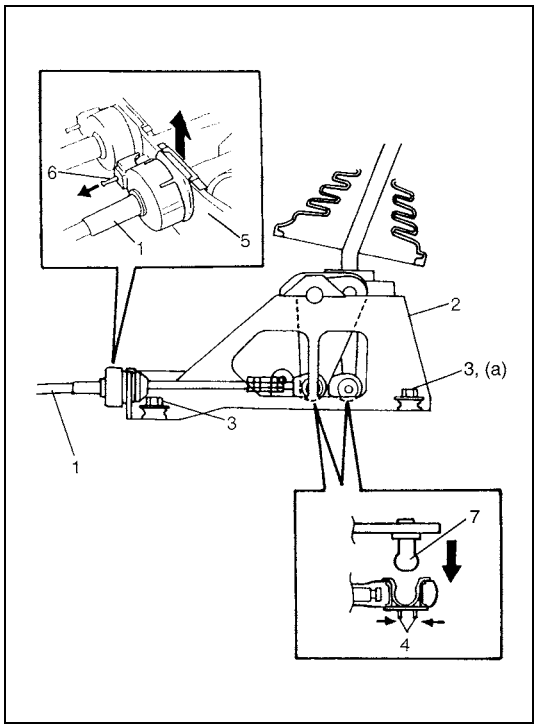

Gear Shift Control Lever and Cable Removal and Installation

Removal

1) Remove console box.
2) Disconnect gear shift and select control cables (1) from gear shift control lever assembly (2).
   a) Disconnect cable end from pivot (7) while pushing cable end bush (4).
   b) Detach cable from bracket (5) while pulling pin (6).
3) Remove gear shift control lever assembly mounting nuts (3) and gear shift lever assembly (2) from body.
4) Disconnect shift and select cables (1) from transmission in the same manner as step 2).
5) Remove cable grommet and cable clamp, and then remove shift and select cables (1) from body.

Installation

Reverse removal procedure for installation noting the following.

- Tighten gear shift control lever assembly mounting nuts (3) to specified torque.

Tightening torque
Gear shift control lever assembly mounting nut
(a) : 13 N·m (1.3 kg-m, 9.5 lb-ft)

Gear Shift Control Lever and Cable Adjustment

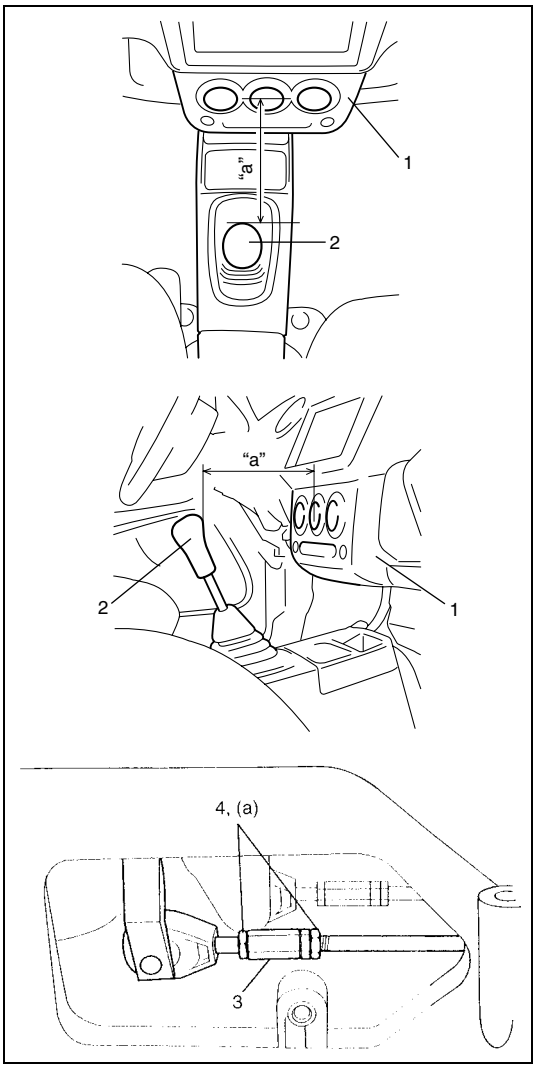

- Adjustment of shift cable:

a) With shift control lever in "NEUTRAL" position, adjust shift cable adjusting nut (3) so that distance "a" between edge of instrument panel (1) and center of shift knob (2) measured as specified value.

Distance "a" : 215 mm (8.46 in.)

b) After shift cable adjustment, tighten cable lock nut (4) to specified torque.

Tightening torque
Cable lock nut (a) : 5.5 N·m (0.55 kg-m, 4.0 lb-ft)

c) Make sure that boots are installed correctly.

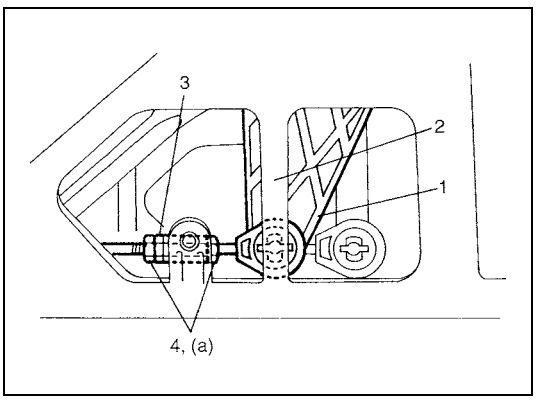

- Adjustment of select cable:

a) With shift control lever in "NEUTRAL" position, adjust select cable adjusting nut (3) so that the tip of select arm (cable joint point) (1) and the center rip of gear shift control lever assembly (2) are aligned as shown.

b) After select cable adjustment, tighten cable lock nut (4) to specified torque.

Tightening torque
Cable lock nut (a) : 5.5 N·m (0.55 kg-m, 4.0 lb-ft)

Vehicle Speed Sensor (VSS) Removal and Installation

Removal

1) Disconnect negative cable at battery.

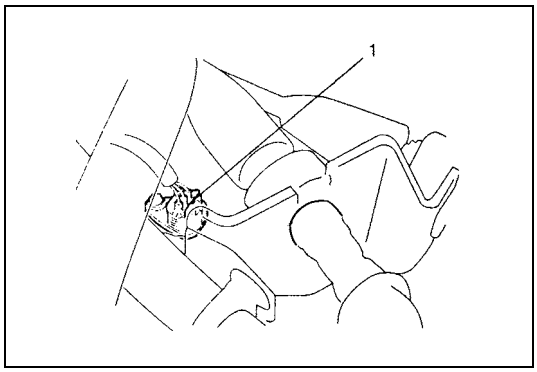

2) Disconnect VSS coupler (1).

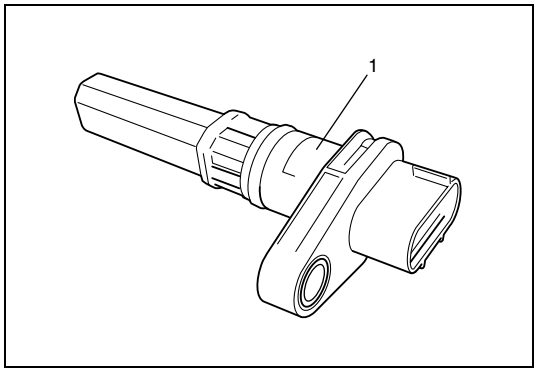

3) Remove VSS (1).

Installation

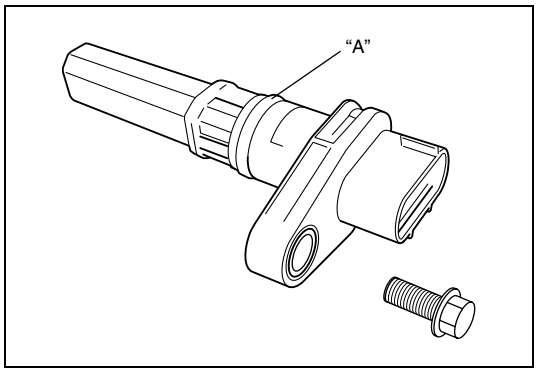

1) Apply grease to new O-ring and then install VSS to transaxle.

"A" : Grease 99000-25010

2) Connect negative cable at battery.

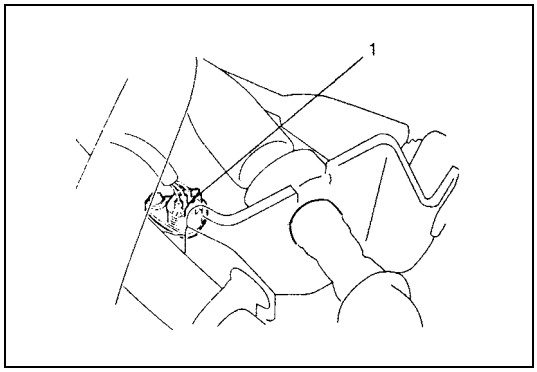

3) Connect VSS coupler (1).

Back Up Lamp Switch Removal and Installation

Removal

1) Disconnect negative cable at battery.

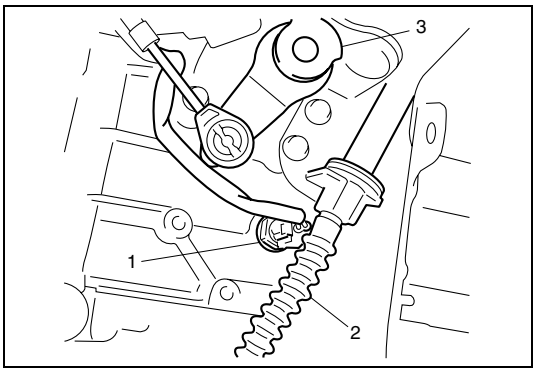

2) Disconnect back up lamp switch coupler (1).

2.	Clutch cable
3.	Gear shift and select shaft assembly

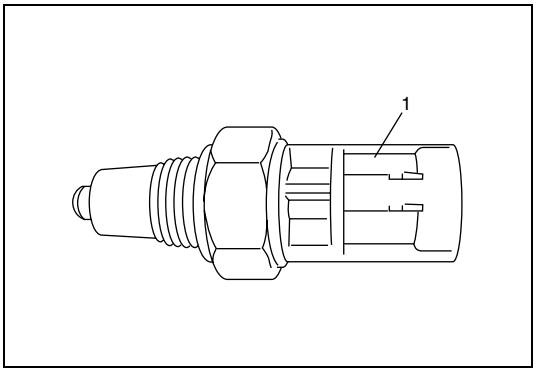

3) Remove back up lamp switch (1).

Installation

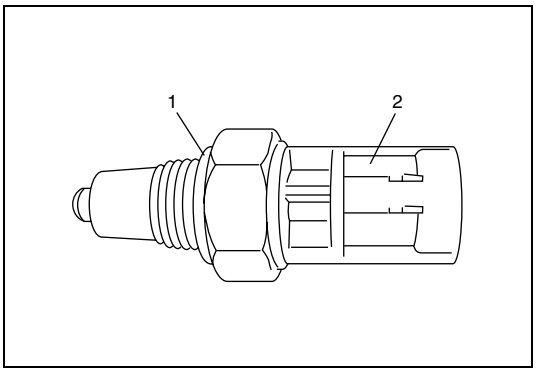

1) Apply grease to new O-ring (1) and tighten back up lamp switch (2) to specified torque.

Tightening torque
Back up lamp switch (a) : 23 N·m (2.3 kg-m, 17.0 lb-ft)

2) Connect negative cable at battery.
3) Connect back up lamp switch coupler (1).

Back Up Lamp Switch Inspection

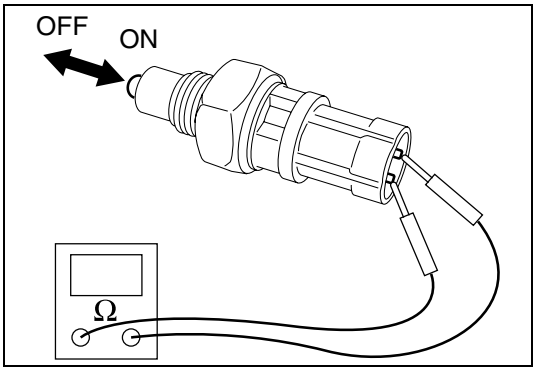

Check backup lamp switch for function using ohmmeter.

Switch ON : Continuity
Switch OFF : No continuity

Unit Repair Overhaul

Transaxle Unit Components

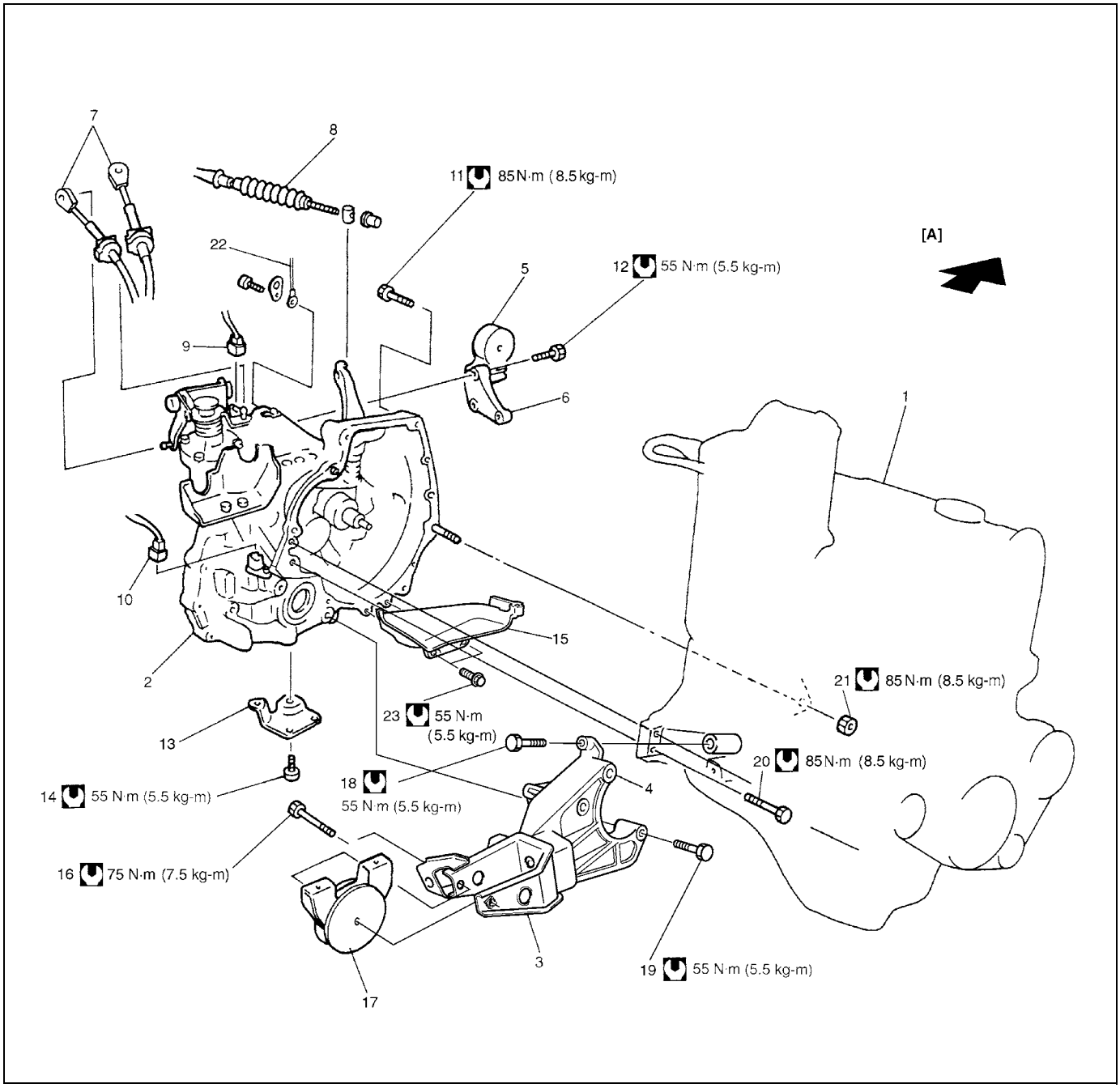

[A] : Forward	9. Backup lamp switch connector	18. Engine rear mounting No.2 bracket bolts
1. Engine	10. VSS connector	19. Transaxle to engine rear mounting No.2 bracket bolt
2. Transaxle	11. Transaxle to engine bolts	20. Transaxle to engine bolts
3. Engine rear mounting No.1 bracket	12. Engine left mounting bracket bolts	21. Transaxle to engine nut
4. Engine rear mounting No.2 bracket	13. Engine rear mounting bracket stiffener	22. Ground cable
5. Engine left mounting	14. Stiffener bolts	23. Clutch housing lower plate bolts
6. Engine left mounting bracket	15. Clutch housing lower plate	Tightening torque
7. Shift & select control cables	16. Engine rear mounting bolt	
8. Clutch cable	17. Engine rear mounting	

Transaxle Unit Dismounting and Remounting

Dismounting

Under hood

1) Disconnect negative cable at battery.
2) Undo wiring harness clamps, disconnect backup lamp switch coupler, VSS coupler and ground cable.
3) Disconnect clutch cable from clutch release lever and bracket.
4) Disconnect gear shift and select control cables.
5) Remove transaxle control cable bracket.
6) Remove water pipe bracket bolts from transaxle.

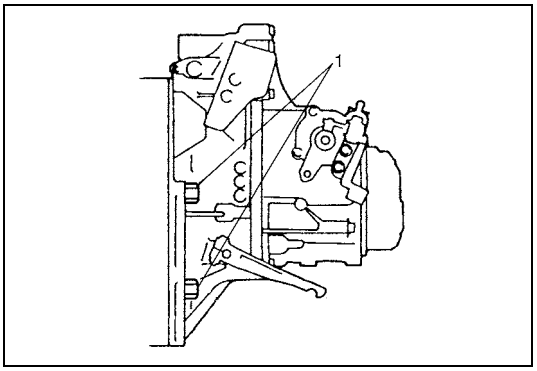

7) Remove transaxle to engine bolts (1).
8) Remove starting motor referring to “Starting Motor Dismounting and Remounting” in Section 6G.
9) Support engine by using lifting device.

On lift

10) Drain transaxle oil referring to “Manual Transaxle Oil Change” in this section.
11) Remove left and right drive shaft referring to “Front Drive Shaft Assembly Removal and Installation” in Section 4A.
12) Remove left side of engine under cover.

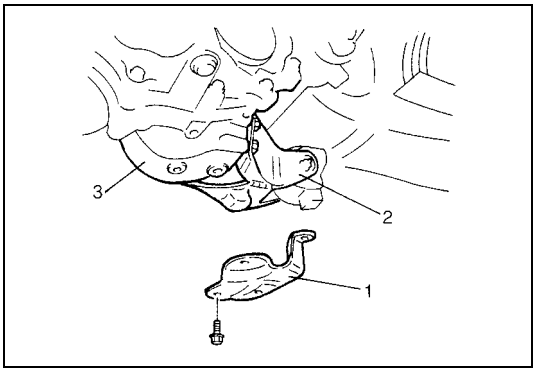

13) Remove engine rear mounting bracket stiffener (1).
14) Remove clutch housing lower plate.
15) Remove engine rear mounting No.1 bracket (2) with No.2 bracket (3).
16) Remove transfer referring to “Transfer Dismounting and Mounting” in Section 7D, if equipped.
17) Remove transaxle to engine bolts and nut.
18) Lower vehicle and support transaxle with transaxle jack.

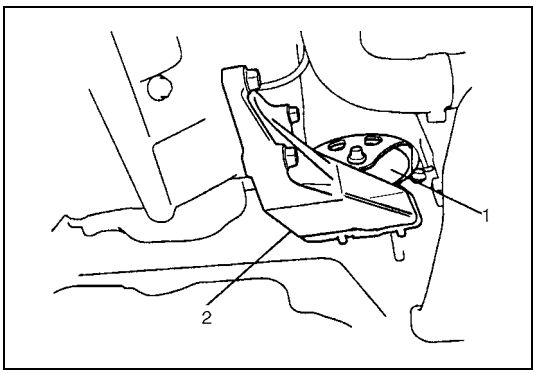

19) Remove engine left mounting (1) with bracket (2).
20) Remove other attached parts from transaxle, if any.
21) Pull transaxle out so as to disconnect input shaft from clutch disc and then lower it.

Remounting

CAUTION:
Care should be taken not to scratch oil seal lip with drive shaft while raising transaxle.
Do not hit drive shaft joint with hammer when installing it into differential gear.

Reverse dismounting procedure for remounting noting the following.

- Install transfer referring to “Transfer Dismounting and Mounting” in Section 7D, if equipped.
- Refer to “Transaxle Unit Components” for fastener specified torque.
- Push in drive shaft joints (right & left) fully so as to snap ring of shaft engages with differential gear.
- Set each clamp for wiring securely.
- Install starting motor referring to “Starting Motor Dismounting and Remounting” in Section 6G.
- After connecting clutch cable, be sure to adjust its play properly.
  Refer to “Clutch Pedal Inspection” in Section 7C.
- Fill transaxle with oil as specified referring to “Manual Transaxle Oil Change” in this section.
- Connect battery and check function of engine, clutch and transaxle.

Transaxle Case Components

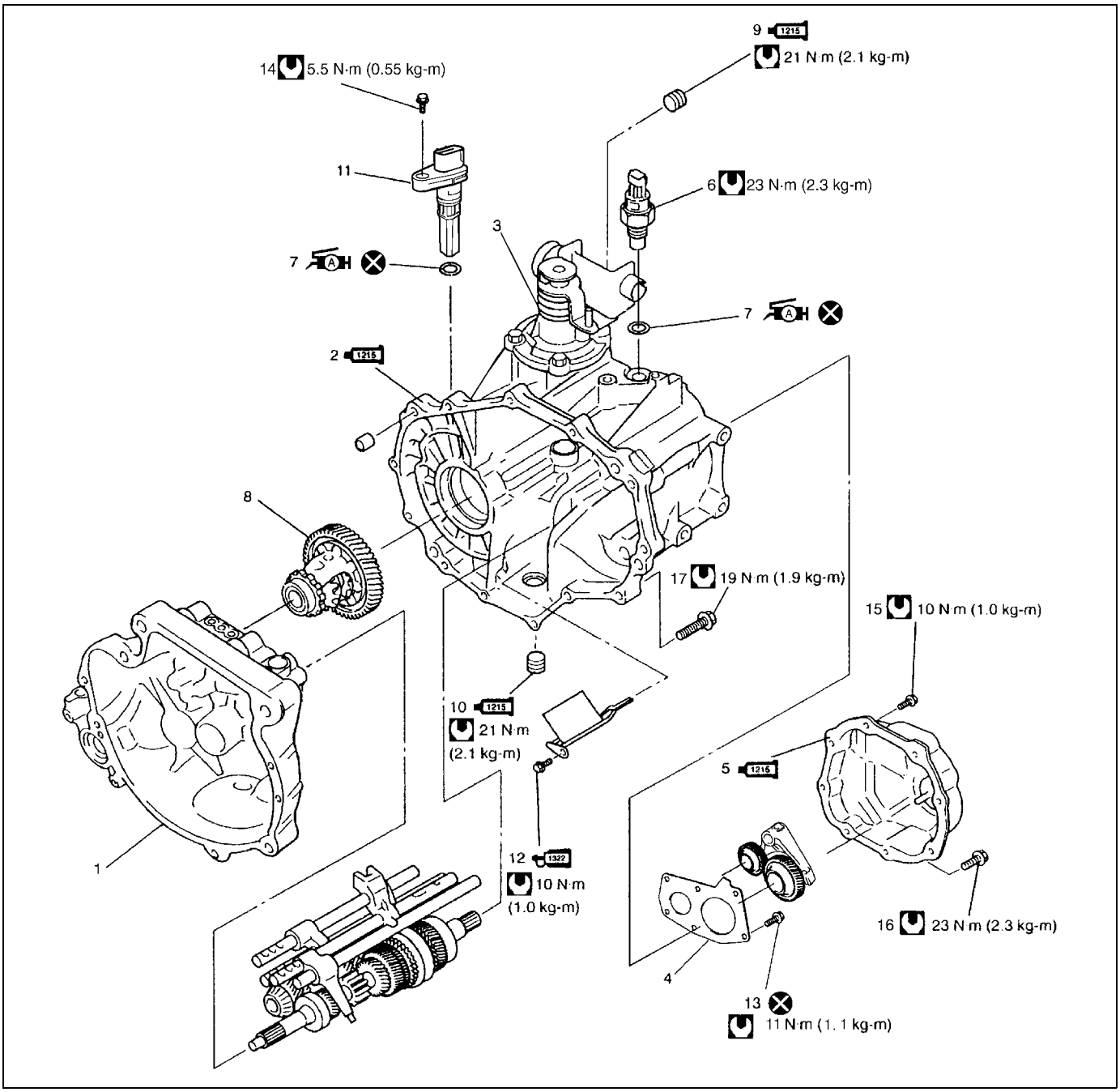

	1. Transaxle right case	1322	12. Oil gutter bolt : Apply thread lock 99000-32110 to all around thread part of bolt.
1215	2. Transaxle left case : Apply sealant 99000-31110 to mating surface of left case and right case.		13. Left case plate screw and bolts
	3. Gear shift and select shaft assembly		14. VSS bolt
	4. Transaxle left case plate		15. Side cover bolt No.1
1215	5. Transaxle side cover : Apply sealant 99000-31110 to mating surface of side cover and left case.		16. Side cover bolt No.2
	6. Back up lamp switch		17. Transaxle case bolt
A H	7. O-ring : Apply SUZUKI SUPER GREASE A 99000-25010 to O-ring.		18. Guide case bolt No.1
	8. Differential assembly		19. Guide case bolt No.2
1215	9. Oil level/filler plug : Apply sealant 99000-31110 to all around thread part of plug.		Tightening torque
1215	10. Oil drain plug : Apply sealant 99000-31110 to all around thread part of plug.		Do not reuse.
	11. VSS		

Gear Shift and Select Shaft Assembly Components

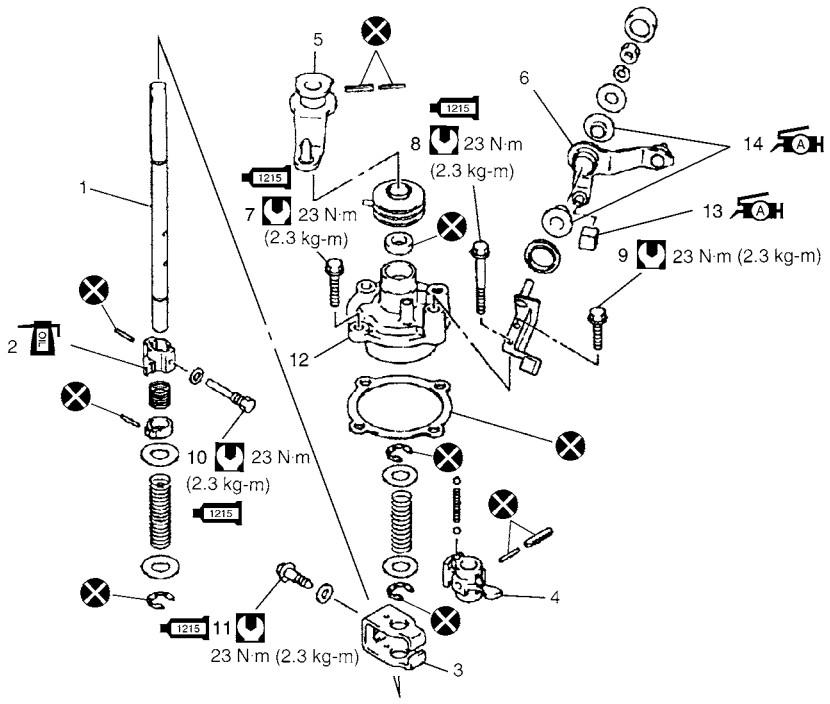

1.	Gear shift & select shaft	7.	Guide case bolt No.1	13.	Select lever shaft bush :Apply grease 99000-25010 to whole area of bush.
2.	5th & reverse gear shift cam	8.	Guide case bolt No.2	14.	Select lever boss :Apply grease 99000-25010 to internal and external diameter
3.	Gear shift interlock plate	9.	Select lever bracket bolt		Tightening torque
4.	Gear shift & select lever	10.	5th to reverse interlock guide bolt :Apply sealant 99000-31110 to bolt thread.		Do not reuse.
5.	Shift cable lever	11.	Gear shift interlock bolt :Apply sealant 99000-31110 to bolt thread.		Apply transaxle oil.
6.	Select cable lever	12.	Guide case		

Gear Shift and Select Shaft Assembly Removal and Installation

Removal

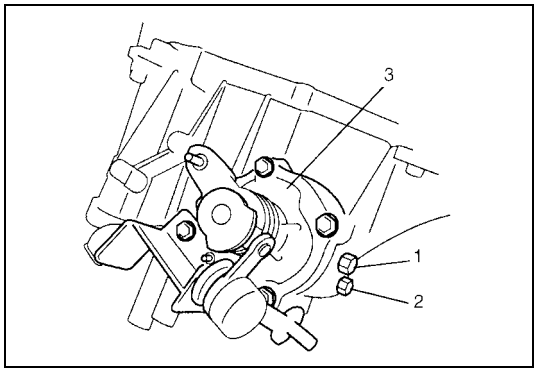

1) Remove gear shift interlock bolt (1) and 5th to reverse interlock guide bolt (2) from transaxle case.
2) Remove gear shift and select shaft assembly (3).

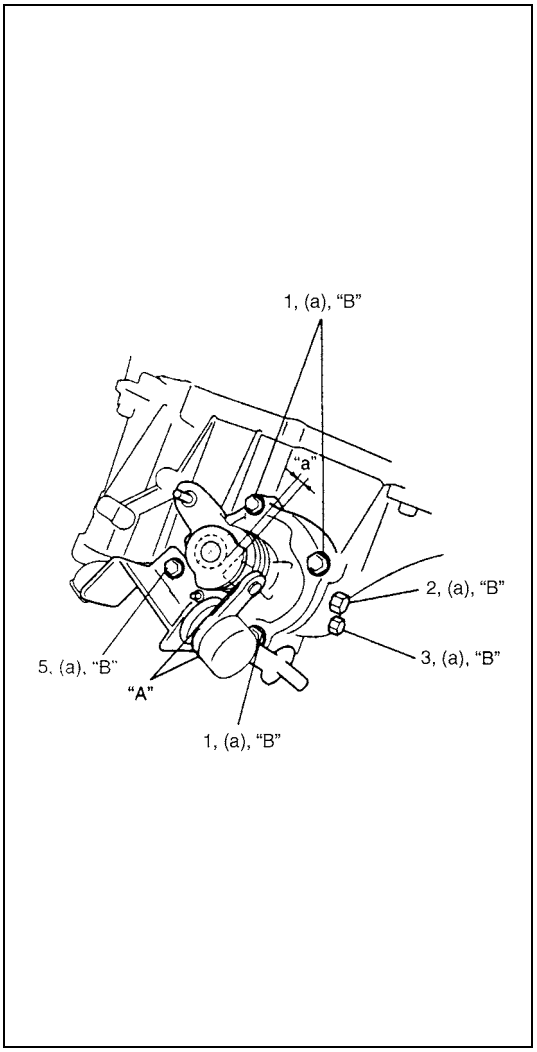

Installation

1) Apply grease to select lever shaft bush and select lever boss, and install gear shift and select shaft assembly with new gasket into transaxle.

"A" : Grease 99000-25010

2) Apply sealant to gear shift guide case No. 2 bolt (5). Tighten gear shift guide case No. 1 bolts (1) and No. 2 bolt (5) to specified torque at the position that clearance "a" is within 1 - 1.5 mm (0.04 - 0.06 in.).

Tightening torque
Gear shift guide case bolts
(a) : 23 N·m (2.3 kg-m, 17.0 lb-ft)

3) Install washer and gear shift interlock bolt (2) to which sealant have been applied and them tighten it to specified torque.

"B" : Sealant 99000-31110

Tightening torque
Gear shift interlock bolt (a) : 23 N·m (2.3 kg-m, 17.0 lb-ft)

4) Install washer and 5th to reverse interlock guide bolt (3) to which sealant have been applied and then tighten it to specified torque.

"B" : Sealant 99000-31110

Tightening torque
5th to reverse interlock guide bolt (a) : 23 N·m (2.3 kg-m, 17.0 lb-ft)

Gear Shift and Select Shaft Disassembly and Assembly

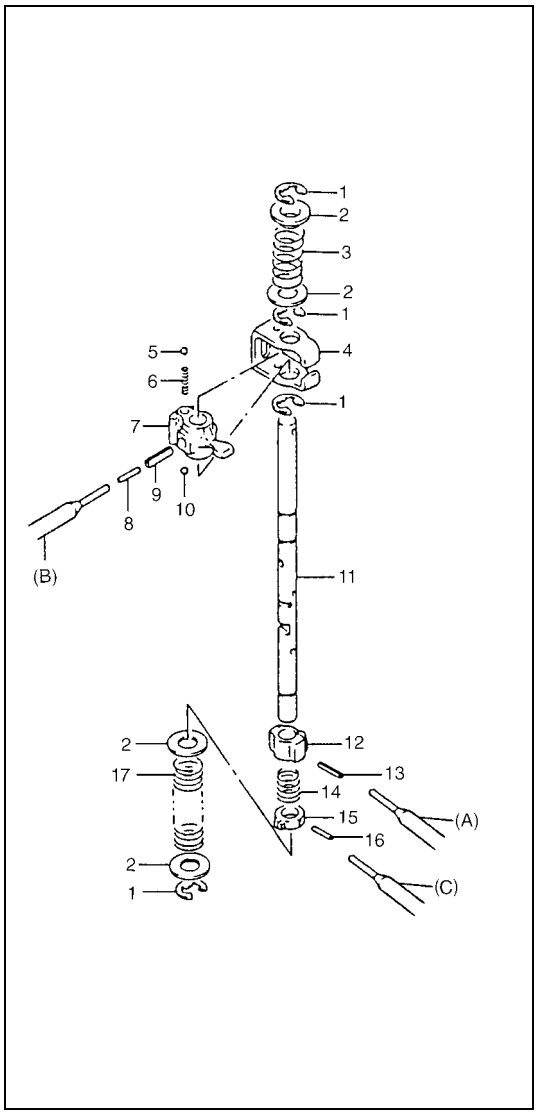

1) Push spring pins out using specified spring pin removers as shown bellow.

Special tool
(A) : 09922-85811 (4.5 mm)
(B) : 09925-78210 (6.0 mm)
(C) : 2.8 – 3.0 mm (0.11 – 0.12 in.) Commercially available spring pin remover

2) Inspect component parts for wear, distortion or damage. If any detect is found, replace detective part with new one.

NOTE:

- **When driving in spring pins, prevent shaft from being bent by supporting it with wood block.**
- **Assemble 5th & reverse gear shift cam with its pit and spring pin aligned.**
- **Make sure to select an appropriate spring by identifying the painted colors to keep gear shifting performance as designed.**
  - **– Low speed select spring - No paint**
  - **– Reverse select spring - Pink**

1. E-ring	10. Ball
2. Washer	11. Gear shift & select shaft
3. Reverse select spring	12. 5th & reverse gear shift cam
4. Gear shift interlock plate	13. Spring pin
5. Ball	14. Cam guide return spring
6. Gear shift interlock spring	15. 5th & reverse gear shift cam guide
7. Gear shift & select lever	16. Spring pin
8. Spring pin	17. Low speed select spring
9. Spring pin	

Fifth Gear Disassembly and Assembly

Disassembly

1) Remove side cover bolts and take off transaxle side cover.

CAUTION:
Care should be taken not to distort side cover when it is removed from left case.

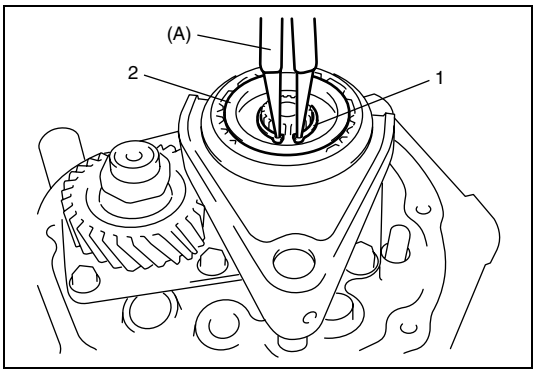

2) Using special tool, remove circlip (1) and then hub plate (2).

Special tool
(A) : 09900-06107

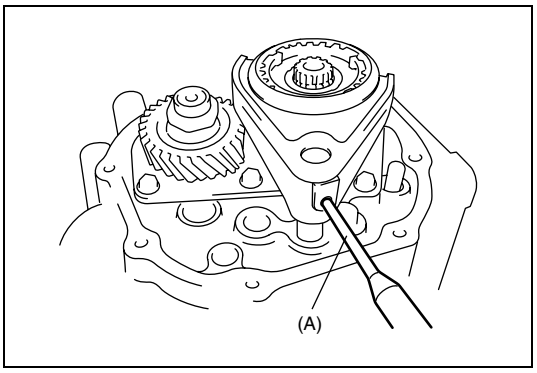

3) Drive out spring pin using special tool and hammer.

Special tool
(A) : 09922-85811

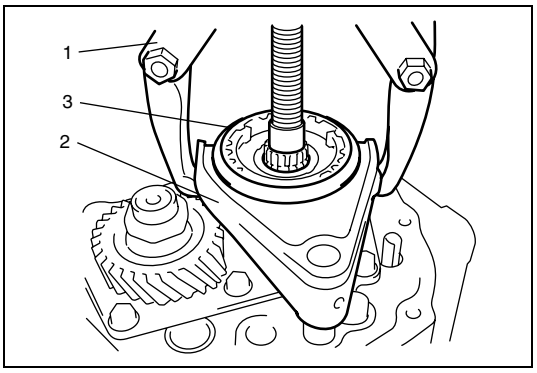

4) Remove gear shift fork (2), sleeve & hub assembly (3), synchronizer ring spring, synchronizer ring and 5th gear all together. Use gear puller (1) for removal if spline fitting of hub is tight.

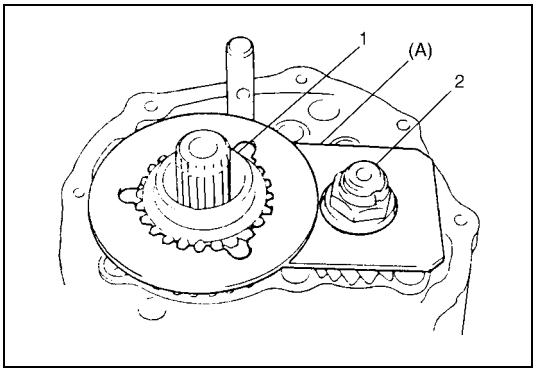

5) Install input shaft 5th gear (1) and special tool to stop rotation of shafts, and remove countershaft nut (2).

Special tool
(A) : 09927-76010

6) Remove special tool, input shaft 5th gear, needle bearing of separated steel cage type and then counter shaft 5th gear.

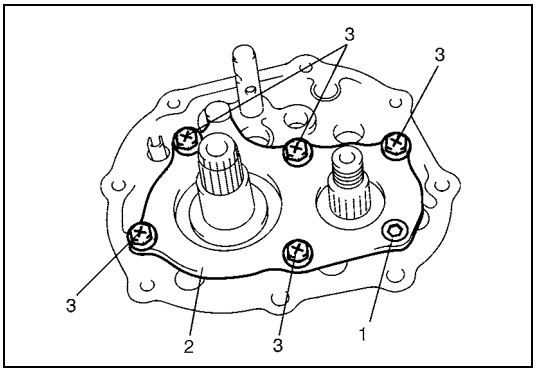

7) Remove left case plate screw (1) and bolts (3), and take off left case plate (2).
8) Remove bearing set shim.

Assembly

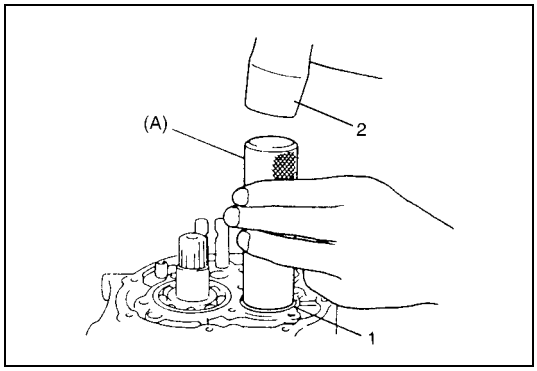

1) Install seat countershaft left bearing cup (1) to bearing cone, tap cup using special tool and plastic hammer (2).

Special tool
(A) : 09913-84510

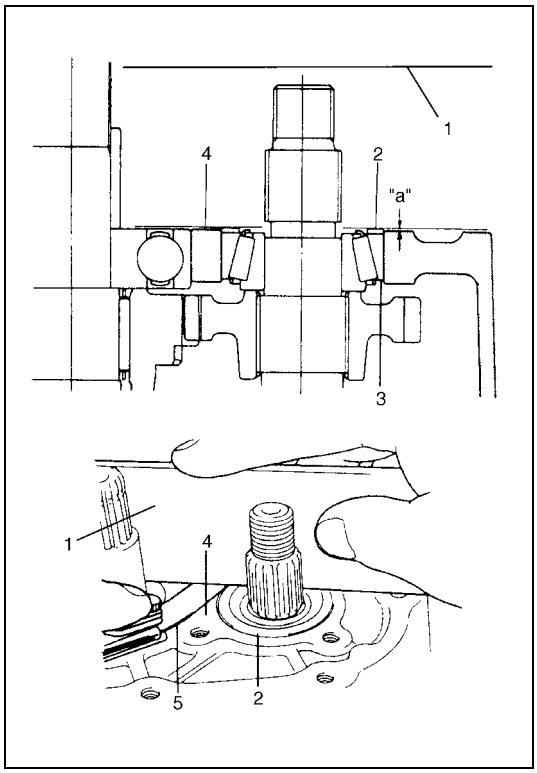

2) With putting a shim (2) on bearing cup (3), place straight edge (1) over it and compress it by hand through straight edge, and then measure clearance “a” between case surface (4) and straight edge using feeler gauge (5).

Clearance between case surface and straight edge
“a” : 0.13 – 0.17 mm (0.0051 – 0.0067 in.)
(Shim protrusion)

3) By repeating above step, select a suitable shim which adjusts clearance “a” to specification and put it on bearing cup.

NOTE:

Insert 0.15 mm (0.0059 in.) feeler to know whether or not a shim fulfills specification quickly.

Available shim thickness
0.40, 0.45, 0.50, 0.55, 0.6, 0.65,0.7, 0.75, 0.8, 0.85, 0.9, 0.95, 1.0,1.05, 1.1 and 1.15 mm (0.015, 0.017, 0.019, 0.021, 0.023,0.025, 0.027, 0.029, 0.031, 0.033,0.035, 0.037, 0.039, 0.041, 0.043 and 0.045 in.)

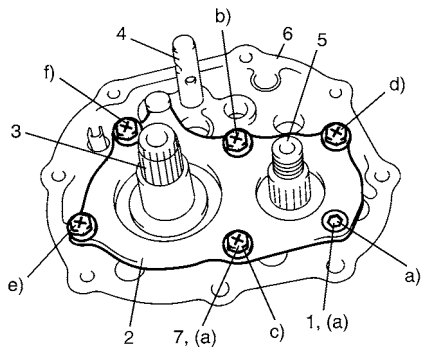

CAUTION:

Do not reuse left case plate screw (1) and bolts (7). Be sure to use new adhesive pre-coated screw and bolts. Otherwise, screw and bolts may loosen.

4) Place left case plate (2) inserting its end in groove of shift guide shaft (4) and tighten new adhesive pre-coated screw (1) and bolts (7) temporarily with less than specified toque.
5) Tighten new screw and new bolts to specified torque finally in the order of alphabet shown in figure.

NOTE:

After tightening screw and bolts, make sure that counter-shaft (5) can be rotated by hand feeling certain load.

Tightening torque
Left case plate screw and bolts
(a) : 10 N·m (1.0 kg-m, 7.5 lb-ft)

3.	Input shaft
6.	Transaxle left case

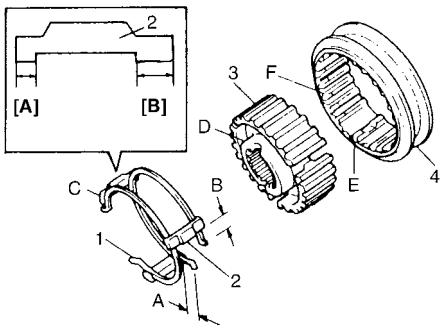

6) Assemble 5th speed synchronizer sleeve (4) and hub (3) with keys (2) and springs (1).

NOTE:

Short side C in keys, long flange D in hub and chamfered spline F in sleeve should face inward (5th gear side).

Synchronizer key installation position
: A = B

[A] : Short side C	D : Long flange (Inward)
[B] : Long side	E : Key way
C : Short side (Inward)	F : Chamfered spline (Inward)

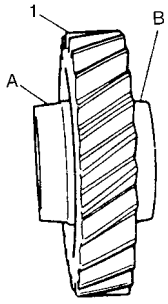

7) Install 5th gear (1) to counter shaft facing machined boss A inward.

A :	Machined boss (Inside)
B :	No machining (Outside)

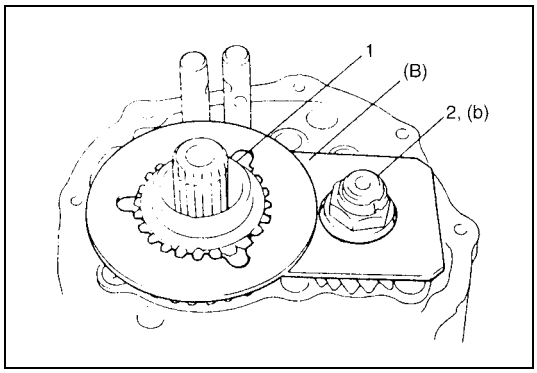

8) Install needle bearing of separated steel cage type to input shaft, apply oil then install 5th gear (1) and special tool to stop shaft rotation.

Special tool
(B) : 09927-76010

9) Install new countershaft nut (2) and tighten it to specification.

Tightening torque
Countershaft nut (b) : 70 N·m (7.0 kg-m, 51.0 lb-ft)

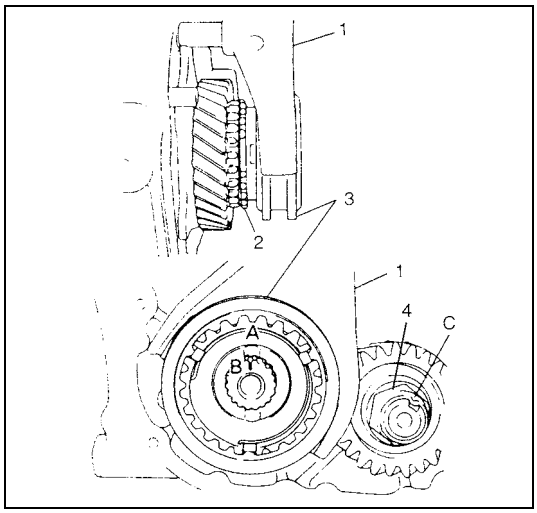

10) Remove special tool, then caulk countershaft nut (4) at C with caulking tool and hammer.
11) Install synchronizer ring (2).
12) Fit 5th gear shift fork (1) to sleeve & hub assembly (3) and install them into input shaft, shift shaft and shift guide shaft at once aligning hub oil groove A with shaft mark B.

NOTE:

Long flange of hub faces inward (gear side).

A :	Oil groove (Align with B)
B :	Punch mark
C :	Caulking

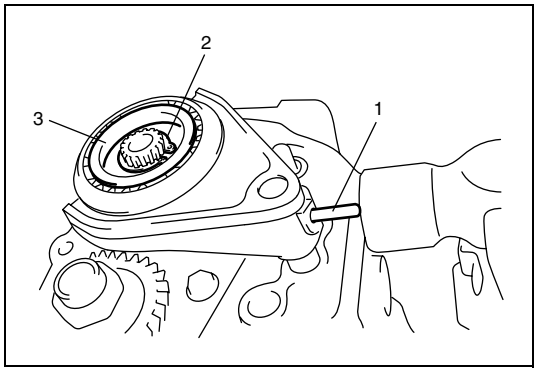

13) Drive in spring pin (1).
14) Fit hub plate (3) and fix it with circlip (2).

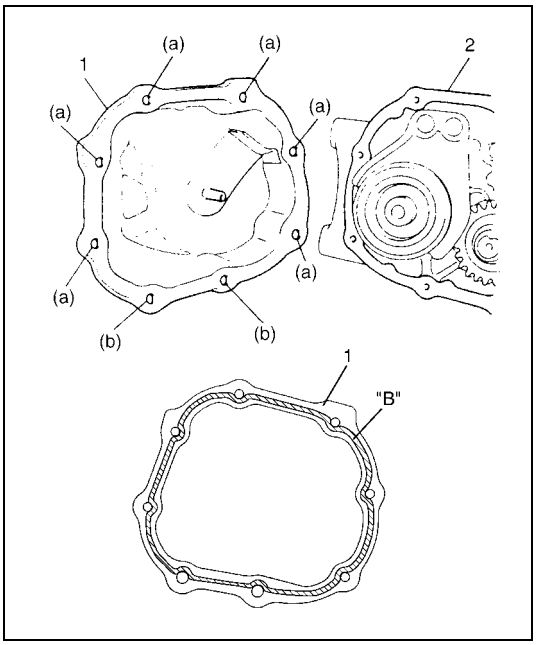

15) Clean mating surface of both left case (2) and side cover (1), apply sealant to side cover (1) as shown in figure by such amount that its section is 1.5mm (0.059 in.) in diameter, mate it with left case and then tighten bolts.

"B" : Sealant 99000-31110

Tightening torque
Side cover No.1 bolts (a) : 10 N·m (1.0 kg-m, 7.5 lb-ft)
Side cover No.2 bolts (b) : 23 N·m (2.3 kg-m, 17.0 lb-ft)

Gear Shift Shaft, Input Shaft and Counter Shaft Removal and Installation

Removal

1) Remove gear shift and select shaft assembly referring to "Gear Shift and Select Shaft Assembly Removal and Installation" in this section.
2) Remove fifth gear referring to "Fifth Gear Disassembly and Assembly" in this section.

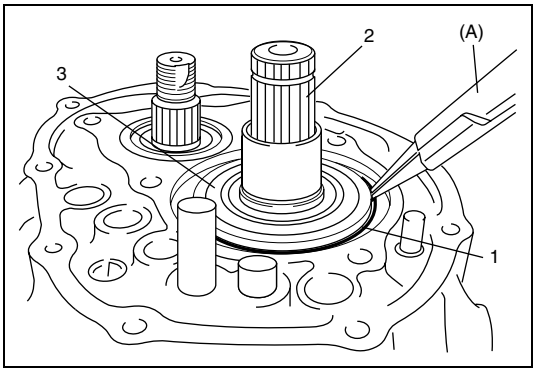

3) Remove snap ring (1) using special tool.

Special tool
(A) : 09900-06107

2. Input shaft
3. Input shaft left bearing

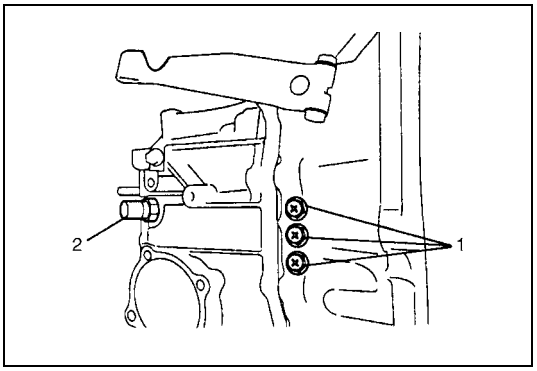

4) Remove gear shift locating bolts (1) with washers, then take out locating springs and steel balls.
5) Remove back up lamp switch (2).

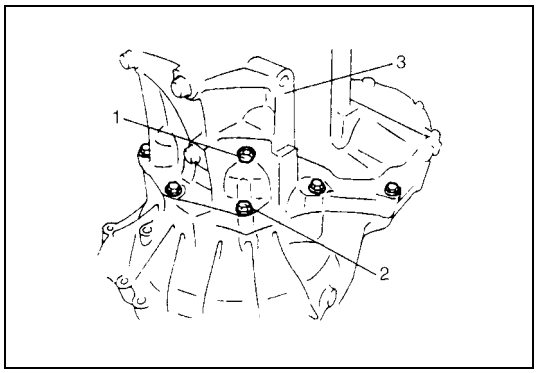

6) Remove reverse shaft bolt (1) with washer.
7) Remove case bolts (2) from outside and another bolts from clutch housing side.
8) Tapping left case (3) flanges with plastic hammer, remove left case.

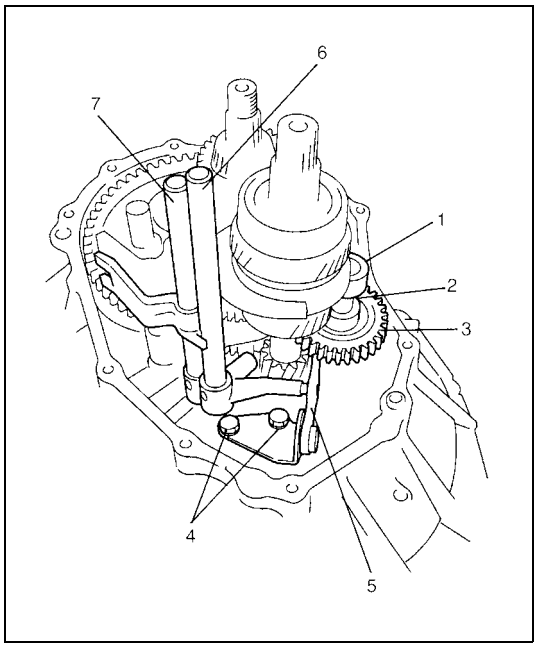

9) Pull out reverse gear shaft (1) with washer (2), then take off reverse idler gear (3).
10) Remove reverse gear shift lever bolts (4) and reverse gear shift lever (5).
11) Pull out 5th & reverse gear shift guide shaft (6) together with 5th & reverse gear shift shaft (7).

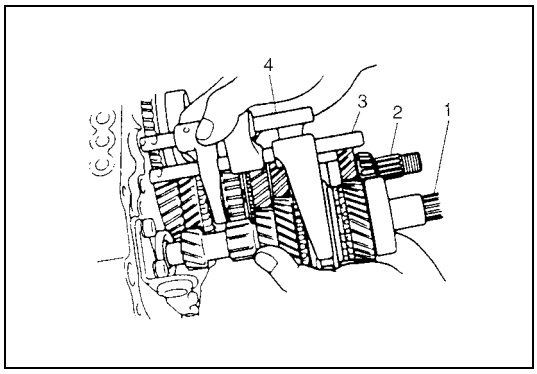

12) Tapping input shaft end with plastic hammer, push it out as assembly from case a little, then take out input shaft assembly (1), counter shaft assembly (2), high speed gear shift shaft (3) and low speed gear shift shaft (4) all at once.

Installation

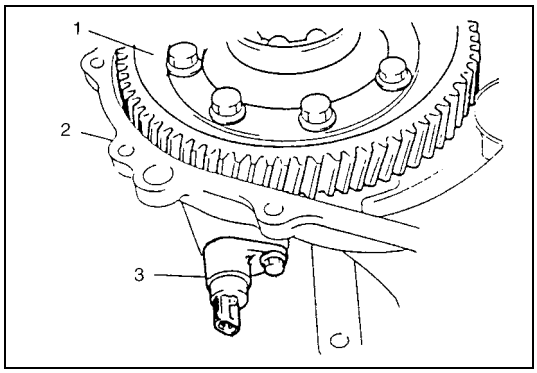

1) Install differential assembly (1) into right case (2).
2) Insert VSS (3) with grease applied to its new O-ring, then tighten it with bolt.

Grease 99000-25010

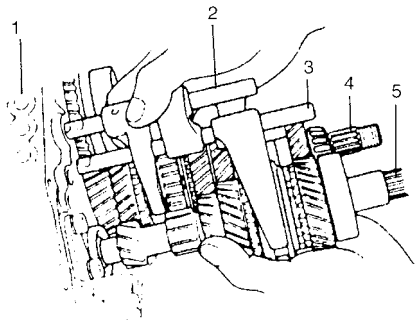

3) Join input shaft (5), countershaft (4), low speed gear shift shaft (2) and high speed gear shift shaft (3) assemblies all together, then install them into right case (1).

CAUTION:
Take care not to damage oil seal lip by input shaft, or oil leakage may take place.

NOTE:
- **Input shaft right bearing on shaft can be installed into right case tapping shaft with plastic hammer.**
- **Check to make sure that counter shaft is engaged with final gear while installing.**

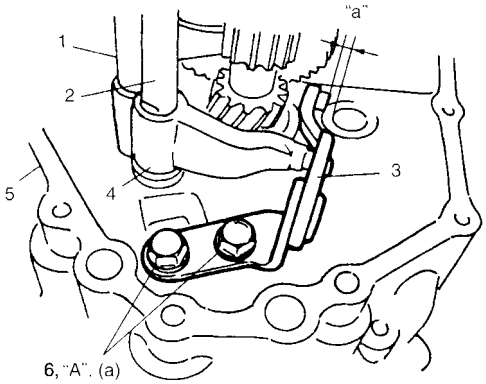

4) Install 5th & reverse gear shift shaft (1) with 5th & reverse gear shift guide shaft (2) into right case (5). Reverse gear shift arm (4) has to be joined with reverse gear shift lever (3) at the same time.
5) Place reverse gear shift lever (3), fasten it with bolts (6) after applying thread lock cement.

"A" : Thread lock cement 99000-32110

Tightening torque
Reverse gear shift lever bolts
(a) : 23 N·m (2.3 kg-m, 17.0 lb-ft)

NOTE:
- **When installing reverse gear shift lever (3), set it as the following specification.**

Distance between lever end and shaft bore
"a" : 5 mm (0.2 in.)

- **Distance "a" must be measured after installing reverse gear shaft.**
- **When "a" is 5 mm (0.2 in.), clearance between reverse idler gear groove and shift lever end will be 1 mm (0.04 in.).**

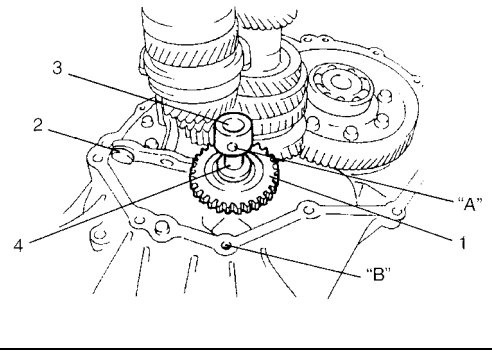

6) Make reverse idler gear (1) with reverse gear shift lever (2), insert reverse gear shaft (3) into case through idler gear and then align "A" in shaft with "B" in case.

NOTE:
- **Make sure that washer (4) has been installed in shaft at above the gear.**
- **Check to confirm that reverse gear shift lever end has clearance 1 mm (0.04 in.) to idler gear groove.**

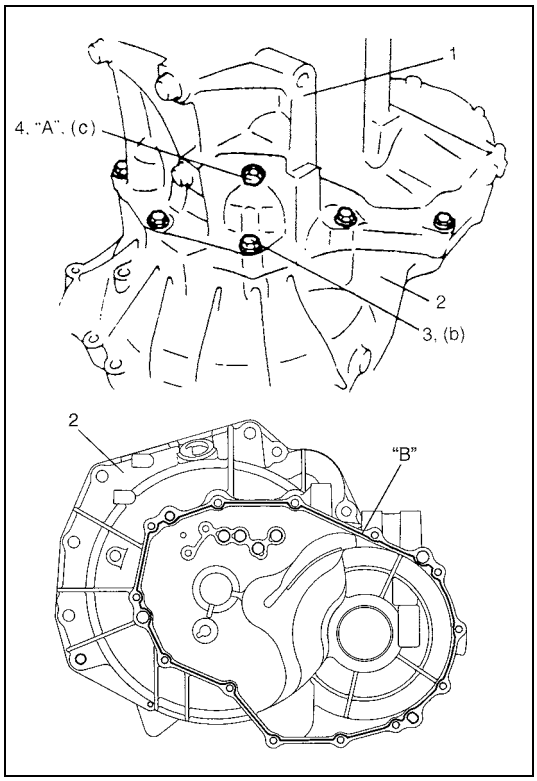

7) Clean mating surfaces of both right and left cases, apply sealant to right case (2) as shown in figure by such amount that its section is 1.5mm (0.059 in.) in diameter then mate it with left case (1).

"B" : Sealant 99000-31110

8) Tighten case bolts (3) from left case side to specified torque.

Tightening torque
Transaxle case bolts (b) : 19 N·m (1.9 kg-m, 14.0 lb-ft)

9) Install reverse shaft bolt (4) to which thread lock cement have been applied with aluminum washer and tighten it.

"A" : Thread lock cement 99000-32110

Tightening torque
Reverse shaft bolt (c) : 23 N·m (2.3 kg-m, 17.0 lb-ft)

10) Install another case bolts from clutch housing side and tighten them to specification.

Tightening torque
Transaxle case bolts : 19 N·m (1.9 kg-m, 14.0 lb-ft)

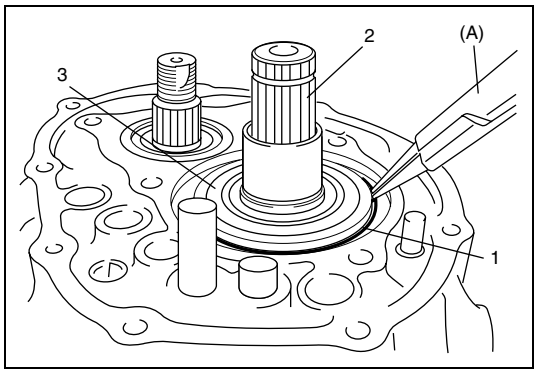

11) Install new snap ring (1) using special tool.

Special tool
(A) : 09900-06107

2. Input shaft
3. Input shaft left bearing

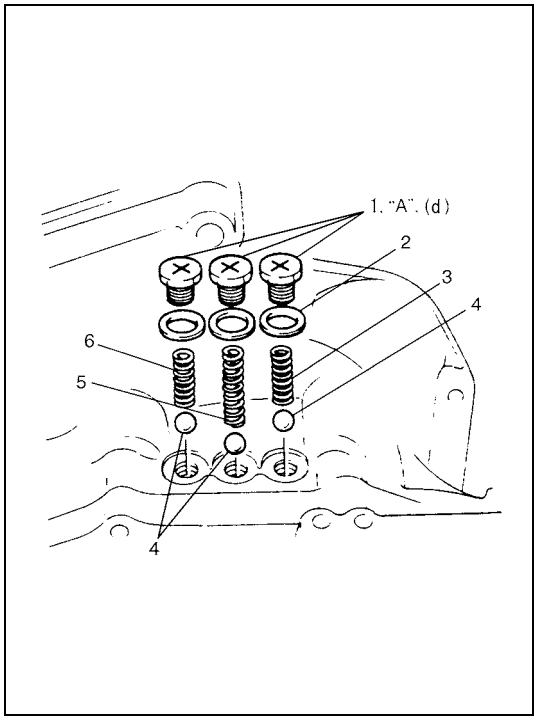

12) Check locating spring for deterioration and replace with new one as necessary.

Locating spring free length
For Low speed (3) and 5th & reverse (6)
Standard : 26.1 mm (1.028 in.)
Service Limit : 25.0 mm (0.984 in.)
For High speed (5)
Standard : 40.1 mm (1.579 in.)
Service Limit : 39.0 mm (1.535 in.)

13) Install steel balls (4) and locating springs (4, 5 and 6) for respective gear shift shaft and tighten bolts (1) to which sealant have been applied to its thread part.

Sealant "A" : 99000-31110

Tightening torque
Gear shift locating bolt (d) : 13 N·m (1.3 kg-m, 9.5 lb-ft)

2. Washer

Assembly

1) Clean mating surface of guide case.
2) Install fifth gear referring to “Fifth Gear Disassembly and Assembly” in this section.
3) Install gear shift and select shaft assembly referring to “Gear Shift and Select Shaft Assembly Removal and Installation” in this section.

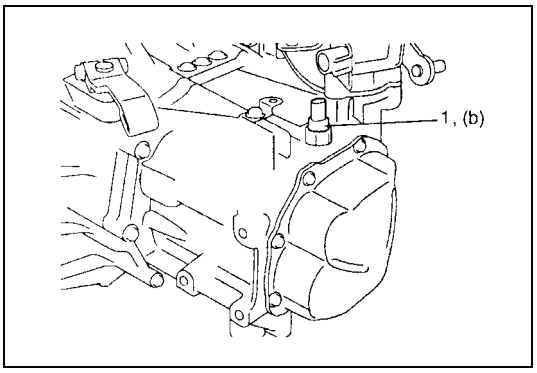

4) Tighten back up lamp switch (1) to specified torque.

Tightening torque
Back up lamp switch (b) : 23 N·m (2.3 kg-m, 17.0 lb-ft)

5) Check input shaft for rotation in each gear position.
6) Also confirm continuity of back up lamp switch in reverse position using ohmmeter.

Transaxle Case Disassembly and Assembly

Disassembly

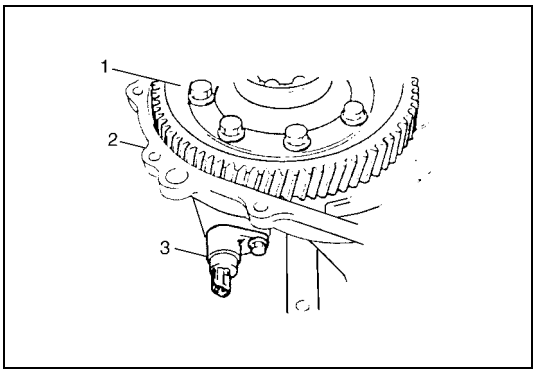

1) Remove differential gear assembly (1) from right case (2).
2) Remove VSS (3).

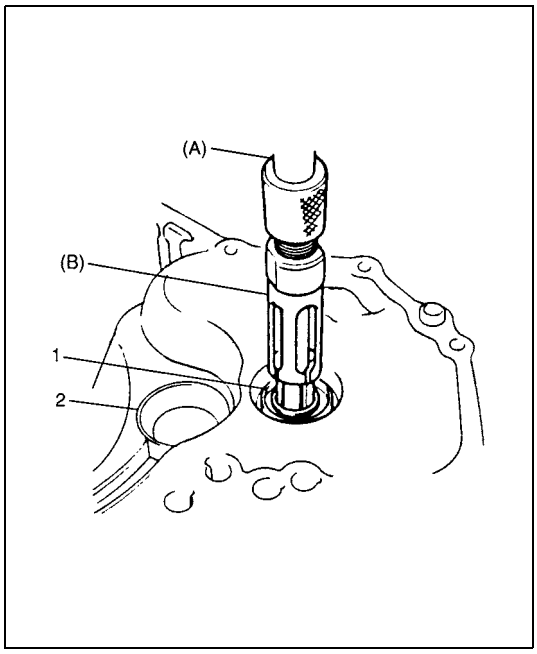

3) Remove input shaft oil seal (1) using special tools, if necessary.

Special tool
(A) : 09930-30104
(B) : 09923-74510

4) If input shaft right bearing has been left in right case, pull it out using special tools.

Special tool
(A) : 09930-30104
(B) : 09923-74510

5) Also pull out countershaft right bearing cup (2) using special tools, if necessary.

Special tool
09941-64511
09930-30104

6) Remove counter shaft left bearing cup from left case using special tools.

Special tool
09913-84510

7) Replace differential side oil seal(s) referring to "Differential Side Oil Seal Replacement" in this section, if necessary.
8) Remove oil gutter from left case, if necessary.

Assembly

NOTE:

Before installation, wash each part and apply specified transaxle oil to sliding faces of bearing and gear.

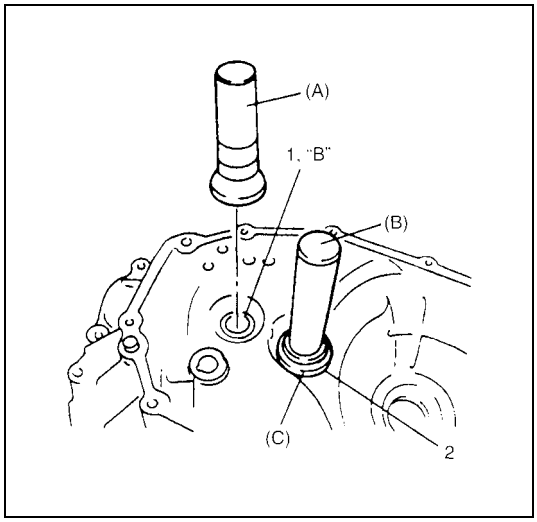

1) If input shaft oil seal (1) has been removed, install it with its spring side facing upward.
Use special tool and hammer for installation and apply grease to oil seal lip.

"B" : Grease 99000-25010

Special tool
(A) : 09951-76010

2) If counter shaft right bearing cup (2) has been removed, install it using special tools and hammer.

Special tool
(B) : 09924-74510
(C) : 09925-68210

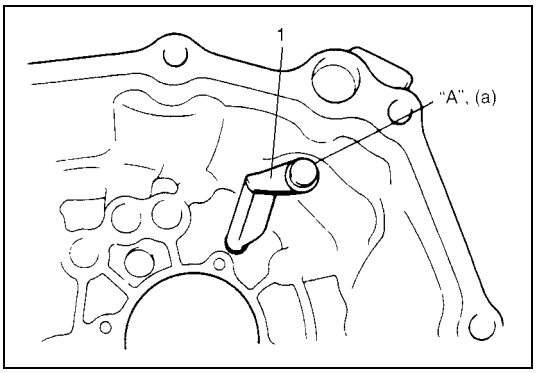

3) If input oil gutter (1) has been removed, install it with bolt to which thread lock cement have been applied.

"A" : Thread lock cement 99000-32110

Tightening torque
Oil gutter bolt (a) : 10 N·m (1.0 kg-m, 7.5 lb-ft)

4) Install counter shaft left bearing cup into case bore tapping it with plastic hammer lightly.

Input & Counter Shaft Components

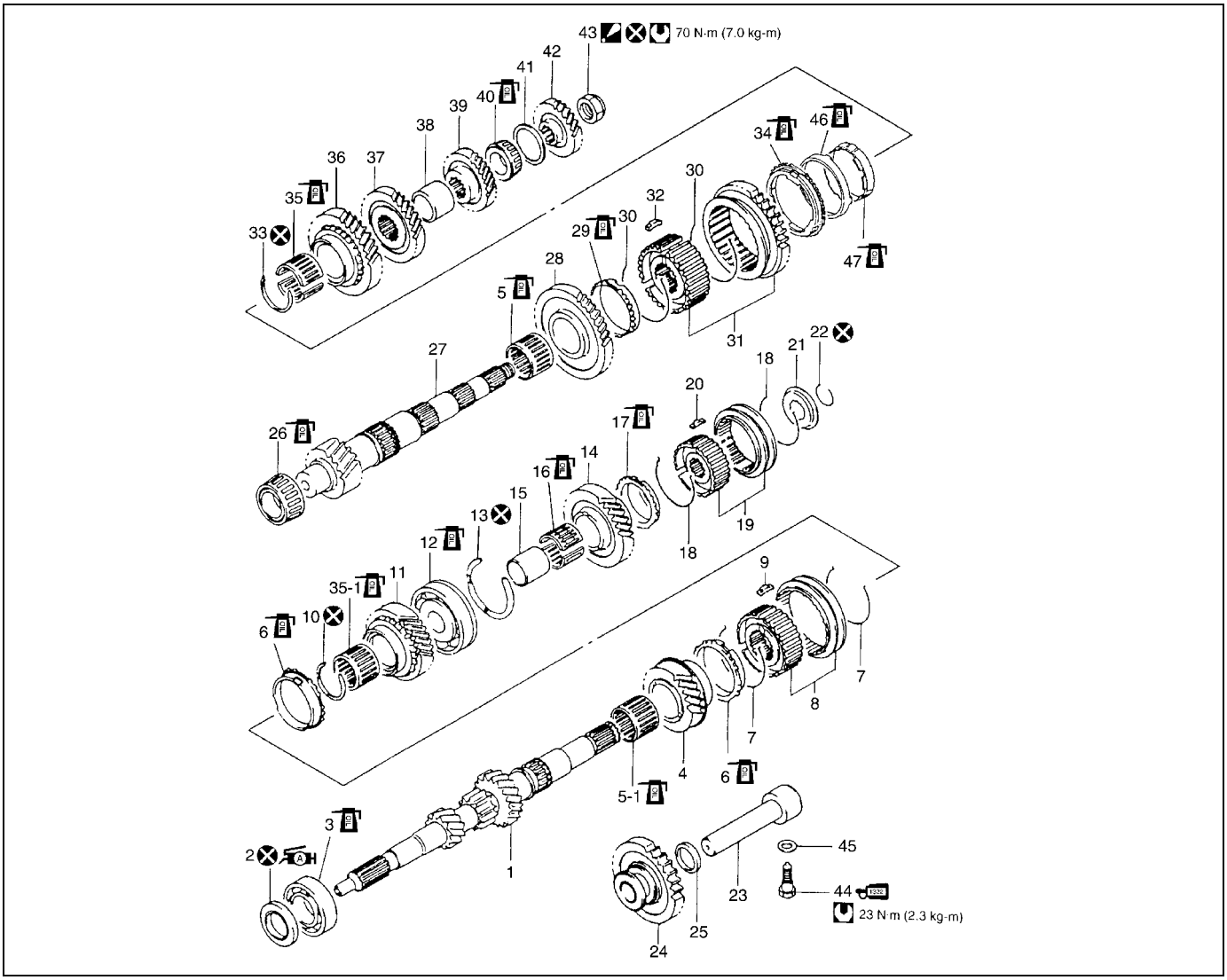

1. Input shaft	18. 5th synchronizer spring	35-1. Needle bearing (steel cage type)
2. Oil seal : Apply grease 99000-25010 to oil seal lip	19. 5th speed sleeve & hub	36. Countershaft 2nd gear
3. Input shaft right bearing	20. 5th synchronizer key	37. Countershaft 3rd gear
4. Input shaft 3rd gear	21. 5th synchronizer hub plate	38. 3rd & 4th gear spacer
5. Needle bearing (resin cage type)	22. Circlip	39. Countershaft 4th gear
5-1. Needle bearing (resin cage type)	23. Reverse gear shaft	40. Countershaft left bearing
6. High speed synchronizer ring	24. Reverse idler gear	41. Bearing set shim
7. High speed synchronizer spring	25. Reverse shaft washer	42. Countershaft 5th gear
8. High speed sleeve & hub	26. Countershaft right bearing	43. Countershaft nut : After tightening nut to specified torque, caulk nut securely.
9. High speed synchronizer key	27. Countershaft	44. Reverse shaft bolt : Apply thread lock cement 99000-32110 to thread part of bolt.
10. Circlip	28. Countershaft 1st gear	45. Washer
11. Input shaft 4th gear	29. 1st gear synchronizer ring	46. Center cone
12. Input shaft left bearing	30. Low speed synchronizer spring	47. 2nd gear synchronizer inner ring
13. Snap ring	31. Low speed sleeve & hub	Tightening torque
14. Input shaft 5th gear	32. Low speed synchronizer key	Do not reuse.
15. 5th gear spacer	33. Circlip	Apply transaxle oil.
16. 5th gear needle bearing (separated steel cage type)	34. 2nd gear synchronizer outer ring	
17. 5th speed synchronizer ring	35. Needle bearing (separated steel cage type)	

Input Shaft Disassembly and Assembly

Disassembly

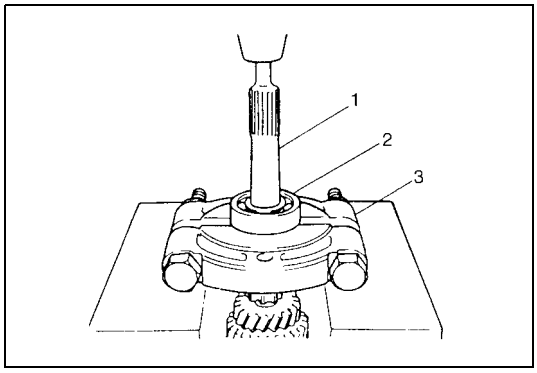

1) Remove input shaft right bearing (2) from input shaft (1) using bearing puller (3) and press.

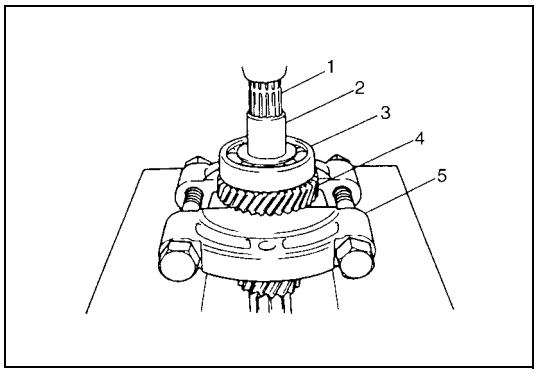

2) Drive out 5th gear spacer (2), left bearing (3) and 4th gear (4) all at once from input shaft (1) using puller (5) and press.

CAUTION:
To avoid gear tooth from being damaged, support it at flat side of bearing puller.

3) Take out 4th gear needle bearing and high speed synchronizer ring.

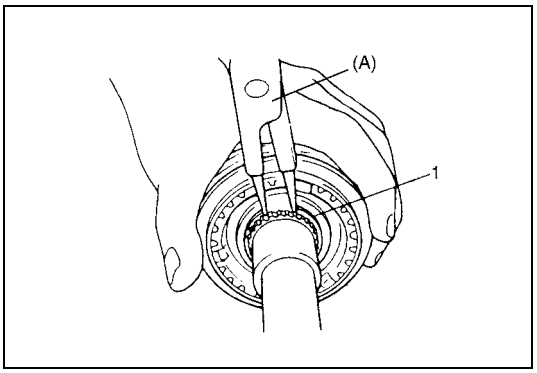

4) Using special tool, remove circlip (1).

Special tool
(A) : 09900-06107

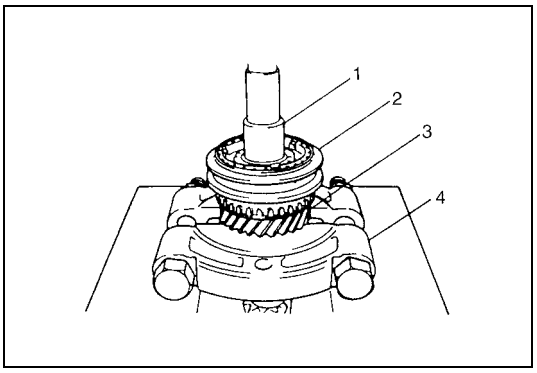

5) Drive out high speed synchronizer sleeve & hub assembly (2) together with 3rd gear (3) from input shaft (1) using puller (4) and press.

CAUTION:
Make sure to use flat side of puller to avoid causing damage to 3rd gear tooth.

6) Take out 3rd gear needle bearing from shaft.
7) Disassemble synchronizer sleeve & hub assembly.

Assembly

1) Clean all components thoroughly, inspect them for any abnormality and replace with new ones as necessary.

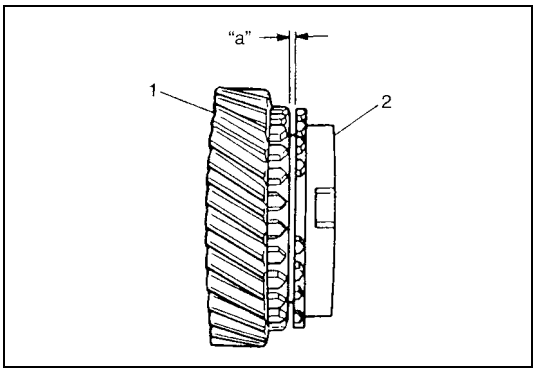

2) If synchronizer parts need to be repaired, check clearance "a" between ring (2) and gear (1), each chamfered tooth of gear, ring and sleeve, then determine parts replacement.

Clearance between synchronizer ring and gear
Standard "a" : 1.0 – 1.4 mm (0.039 – 0.055 in.)
Service limit "a" : 0.5 mm (0.019 in.)

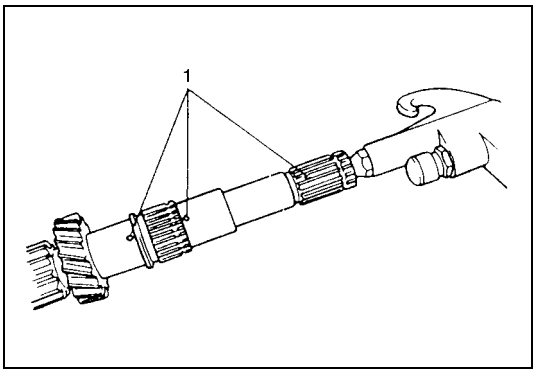

3) To ensure lubrication, air blow oil holes (1) and make sure that they are free from any obstruction.

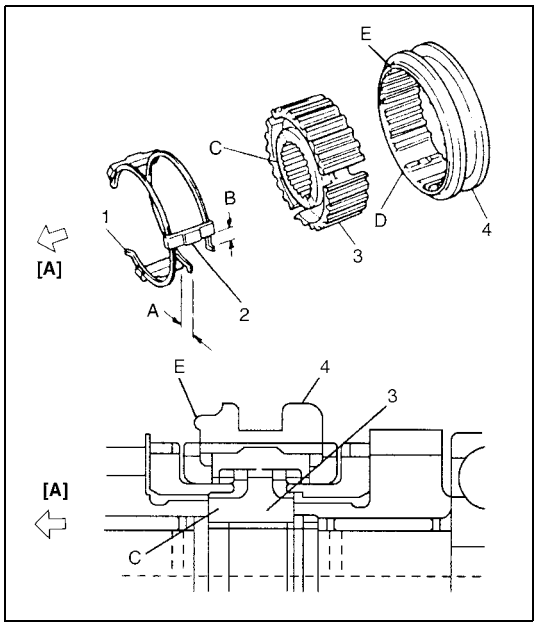

4) Fit high speed synchronizer sleeve (4) to hub (3), insert 3 keys (2) in it and then set springs (1) as shown in figure.

NOTE:

- **No specific direction is assigned to each key but it is assigned as sleeve & hub assembly.**
- **Size of high speed synchronizer sleeve, hub, keys and springs is between those of low speed and 5th speed ones.**

Synchronizer key installation position
: A = B

[A] :	3rd gear side
C :	Long flange
D :	Key way
E :	Projecting end

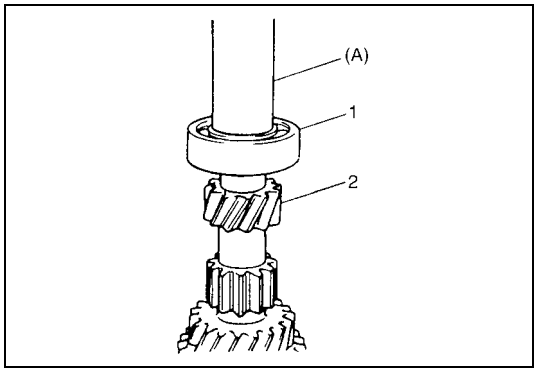

5) Drive in right bearing (1) to input shaft (2) using special tool and hammer.

Special tool
(A) : 09913-80112

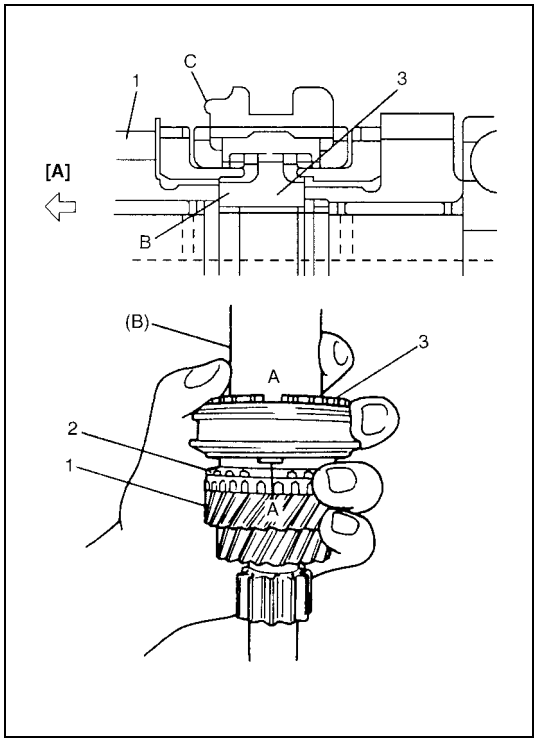

6) Install 3rd gear needle bearing of resin cage type, apply oil to it, then install 3rd gear (1) and synchronizer ring (2).
7) Drive in high speed sleeve & hub assembly (3) using special tool and hammer, facing long flange side of hub to 3rd gear.

NOTE:

- **While press-fitting sleeve & hub, make sure that synchronizer ring key slots are aligned with keys in sleeve & hub assembly.**
- **Check free rotation of 3rd gear after press-fitting sleeve & hub assembly.**
- **Synchronizer rings for 3rd and 4th are identical.**

Special tool
(B) : 09913-84510

[A] :	3rd gear side
A :	Key way
B :	Long flange
C :	Projecting end

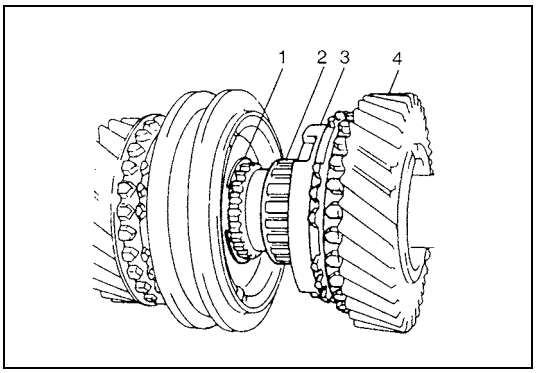

8) Install circlip (1) and confirm that circlip is installed in groove securely.
Install needle bearing (2) of steel cage type, apply oil to bearing and then install synchronizer ring (3) and 4th gear (4).

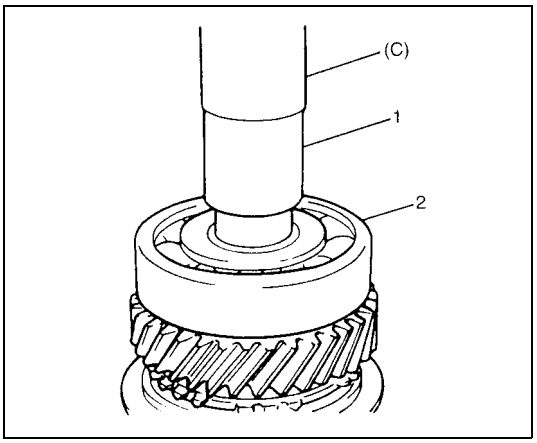

9) Press-fit left bearing (2) using special tool and hammer.

Special tool
(C) : 09925-98221

10) Using the same special tool at step 9), drive in 5th gear spacer (1).

CAUTION:
To prevent 5th gear spacer from being distorted because of excessive compression, do not press-fit it with left bearing at once.

Counter Shaft Disassembly and Assembly

Disassembly

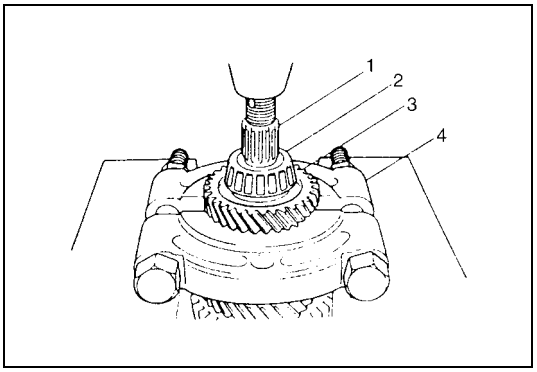

1) Drive out left bearing cone (2) with 4th gear (3) from counter shaft (1) using puller (4) and press.

CAUTION:
- **Use puller and press that will bear at least 5 ton (11,000 lb) safely.**
- **To avoid tooth damage, support 4th gear at flat side of puller.**

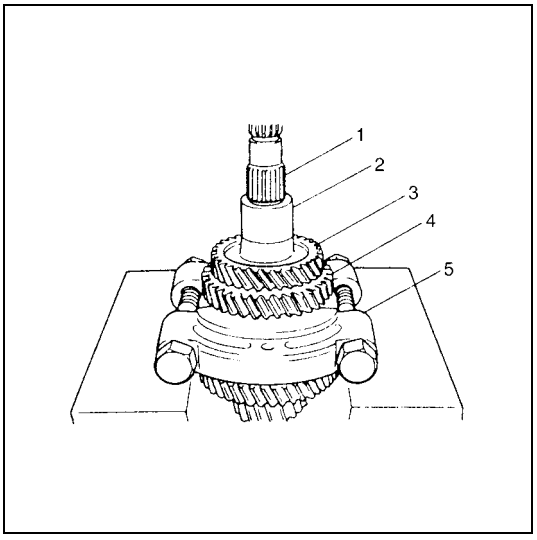

2) Apply puller (5) to 2nd gear (4) and drive out 3rd & 4th gear spacer (2) and 3rd gear (3) together with 2nd gear (4) from counter shaft (1) using press. Take out needle bearing of separated steel cage type from counter shaft.

CAUTION:
- **If compression exceeds 5 ton (11,000 lb), release compression once, reset puller support and then continue press work again.**
- **To avoid gear tooth from being damaged, support it at flat side of bearing puller.**

3) Take out 2nd synchronizer outer ring, center cone and inner ring.

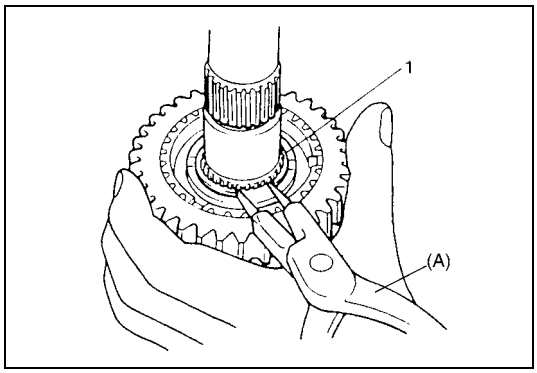

4) Using special tool, remove circlip (1).

Special tool
(A) : 09900-06107

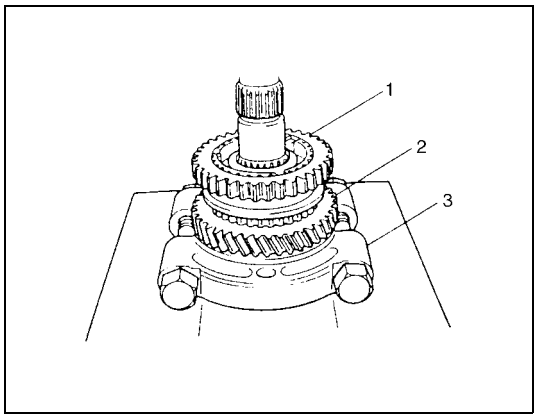

5) Apply puller (3) to 1st gear (2) and drive out low speed synchronizer sleeve & hub assembly (1) with 1st gear (1) using press.

CAUTION:
To avoid gear tooth from being damaged, support it at flat side of bearing puller.

6) Disassemble synchronizer sleeve & hub assembly.
7) Take out 1st gear needle bearing of resin cage type from shaft.

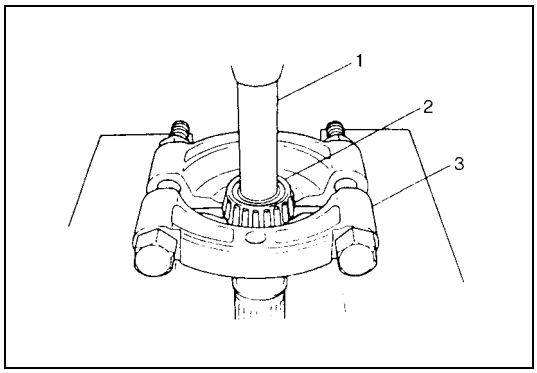

8) Remove right bearing cone (2) using puller (3), metal stick (1) and press.

Assembly

1) Clean all components thoroughly, inspect them for any abnormality and replace with new ones as necessary.

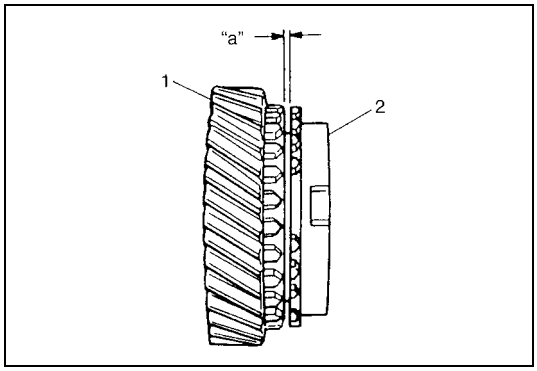

2) If synchronizer parts need to be repaired, check clearance "a" between ring (2) and gear (1), each chamfered tooth of gear, ring and sleeve, then determine parts replacement.

Clearance between synchronizer ring and gear
Standard "a" : 1.0 – 1.4 mm (0.039 – 0.055 in.)
Service limit "a" : 0.5 mm (0.019 in.)

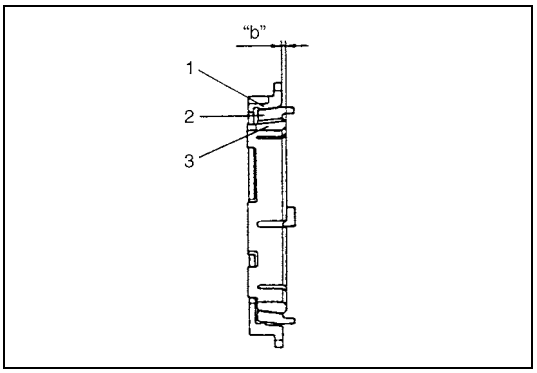

3) Put the synchronizer outer ring (1), inner ring (3) and the cone (2) together and then measure the step difference between the outer ring and the inner ring. And also check each chamfered tooth of gear and synchronizer ring and replace with new one, if necessary. Also, check gear tooth.

Difference between synchronizer outer ring and inner ring
Standard "b" : 1.0 – 1.4 mm (0.039 – 0.055 in.)
Service limit "b" : 0.5 mm (0.019 in.)

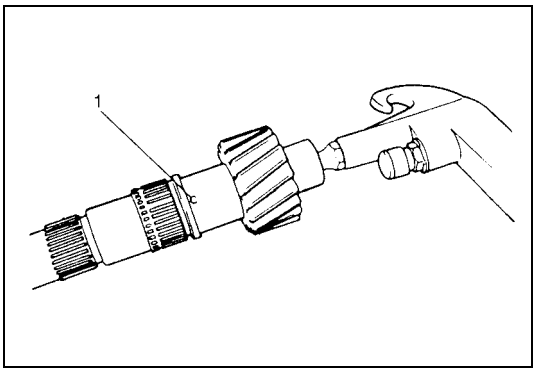

4) To ensure lubrication, air blow oil holes (1) and make sure that they are free from any obstruction.

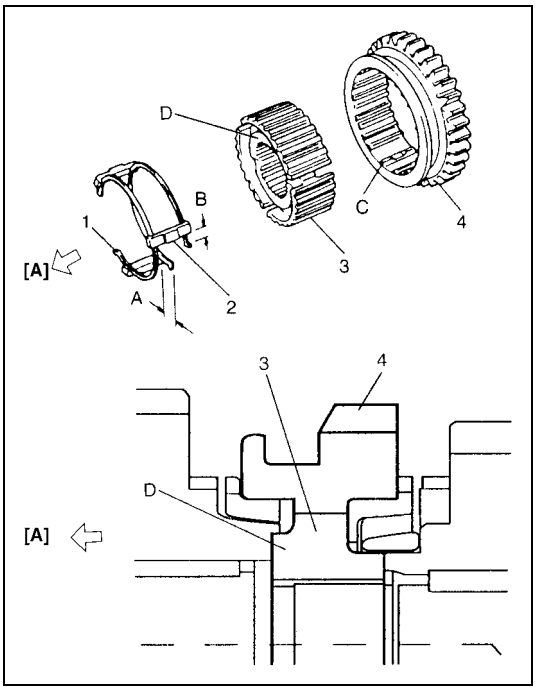

5) Fit low speed synchronizer sleeve (4) to hub (3), insert 3 keys (2) in it and then set springs (1) as shown in figure.

NOTE:

- **No specific direction is assigned to each key but it is assigned as sleeve & hub assembly.**
- **Size of low speed synchronizer keys and springs are the largest compared with those of high speed and 5th speed ones.**

Synchronizer key installation position
: A = B

[A] :	1st gear side
C :	Key way
D :	Short flange

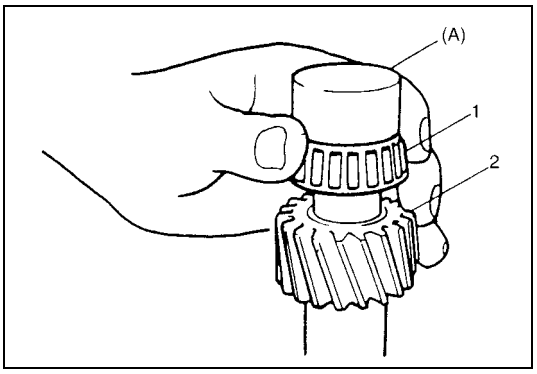

6) Install right bearing cone (1) to counter shaft (2) using special tool and hammer.

Special tool
(A) : 09923-78210

7) Install needle bearing of resin cage type, apply oil to it, then install 1st gear and 1st gear synchronizer ring.

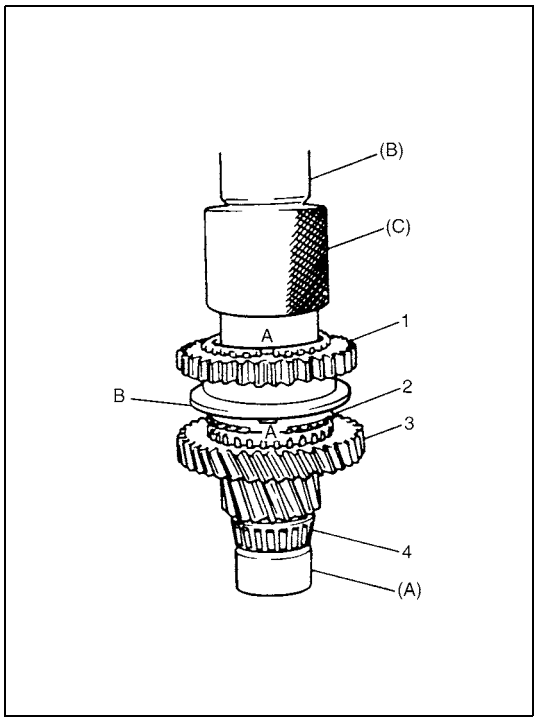

8) Drive in low speed sleeve & hub assembly (1) using special tools and hammer, facing “B” side of sleeve to 1st gear.

NOTE:

- **Support shaft with special tool as shown in figure so that retainer of bearing cone (4) will be free from compression.**
- **Make sure that synchronizer ring (2) key slots are aligned with keys while press-fitting sleeve & hub assembly.**
- **Check free rotation of 1st gear (3) after press-fitting sleeve & hub assembly.**

Special tool
(A) : 09923-78210
(B) : 09925-18011
(C) : 09940-53111

A : Align key slots with keys

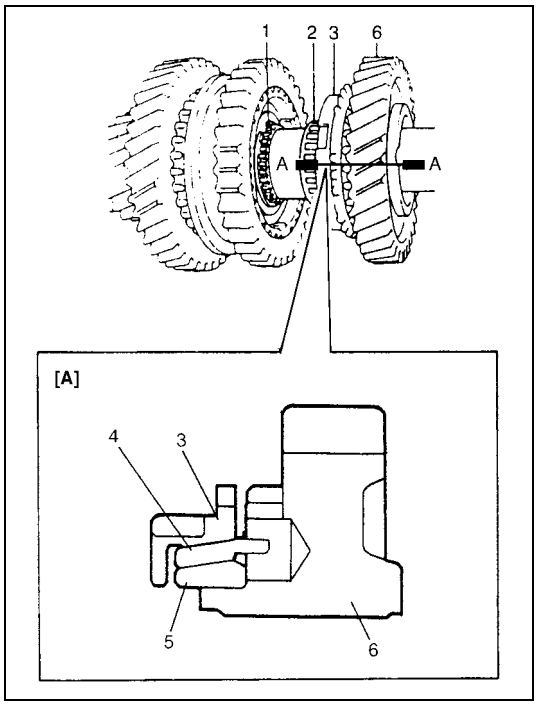

9) Install circlip (1) and confirm that circlip is installed in groove securely.
Install needle bearing (2) of separated steel cage type, apply oil to bearing.
With synchronizer outer ring (3), center cone (4) & inner ring (5) put together and installed to 2nd gear (6) as shown in figure.

[A] : SECTION A - A

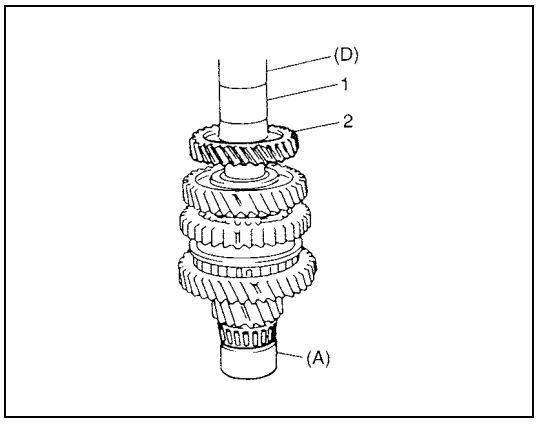

10) Press-fit 3rd gear (2) and spacer (1) using special tools and press.

CAUTION:
Press-fit 3rd gear (2) and spacer (1) first, and then 4th gear later separately so that counter shaft will not be compressed excessively.

Special tool
(A) : 09923-78210
(D) : 09913-80112

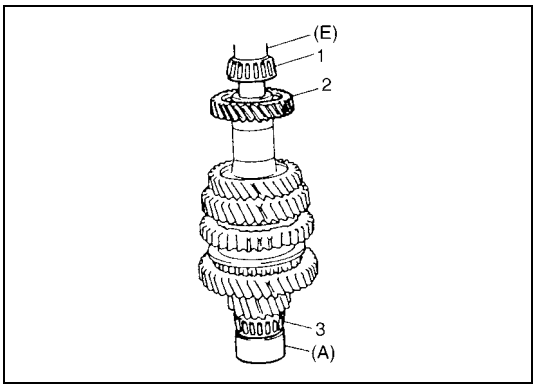

11) Press-fit 4th gear (2) using the same procedure as step 10).
12) Install left bearing cone (1) using special tools and hammer.

NOTE:

For protection of right bearing cone (3), always support shaft with special tool as illustrated.

Special tool
(A) : 09923-78210
(E) : 09925-98221

Gear Shift Shaft Components

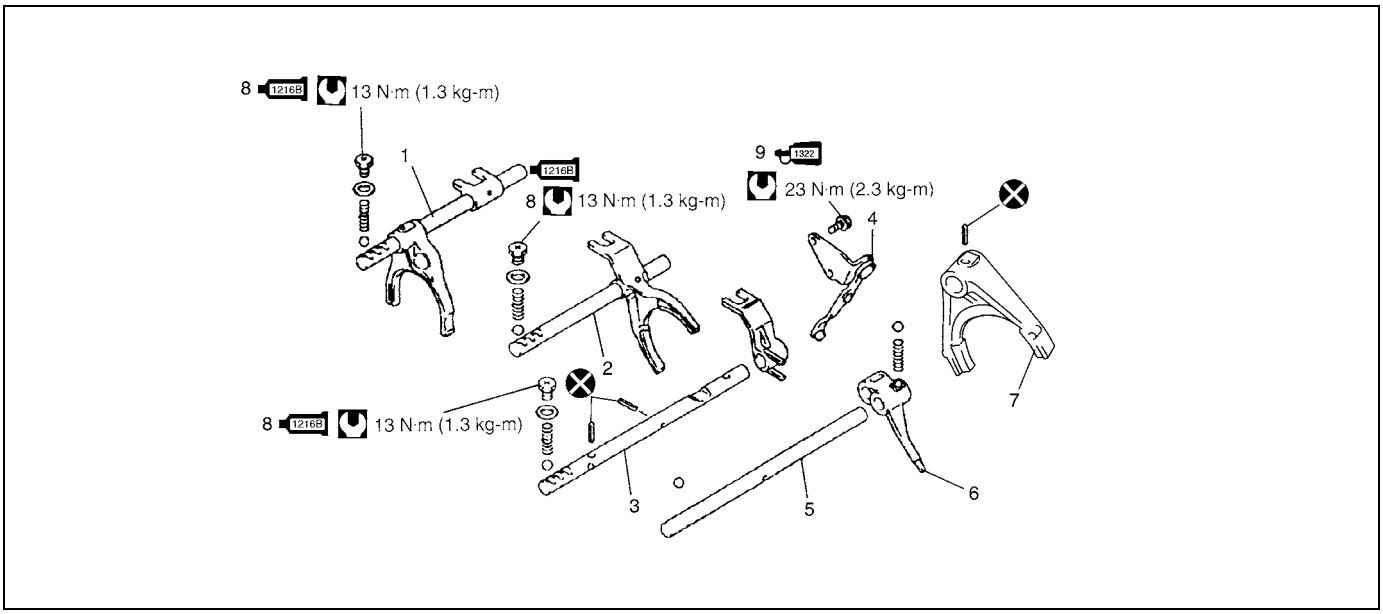

1. Low speed gear shift shaft	5. 5th & reverse gear shift guide shaft	1322 9. Reverse gear shift lever bolt :Apply thread lock 99000-32110 to all around thread part to bolt.
2. High speed gear shift shaft	6. Reverse gear shift arm	Tightening torque
3. 5th & reverse gear shift shaft	7. 5th gear shift fork	Do not reuse.
4. Reverse gear shift lever	1216B 8. Gear shift locating bolt	Apply transaxle oil.

High Speed and Low Speed Gear Shift Shafts Inspection

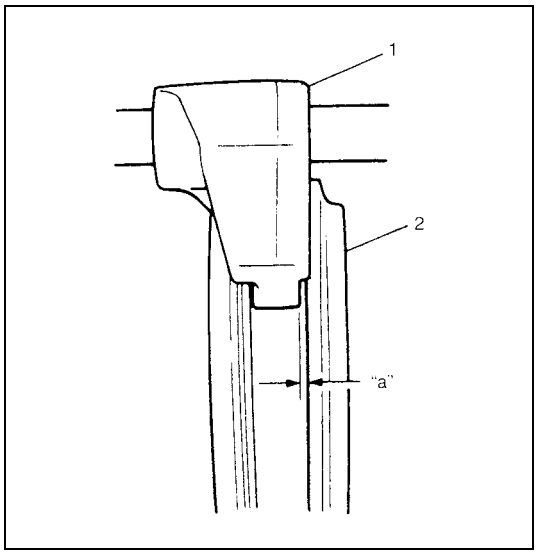

1) Using feeler gauge, check clearance between fork (1) and sleeve (2) and replace those parts if it exceeds limit below.

NOTE:

For correct judgement of parts replacement, carefully inspect contact portion of fork and sleeve.

Clearance between fork and sleeve
Service limit "a" : 1.0 mm (0.039 in.)

2) Insert each gear shift shaft into case and check that it moves smoothly. If it doesn't, correct using oilstone, reamer or the like.

5th & Reverse Gear Shift Shafts Disassembly and Assembly

Disassembly

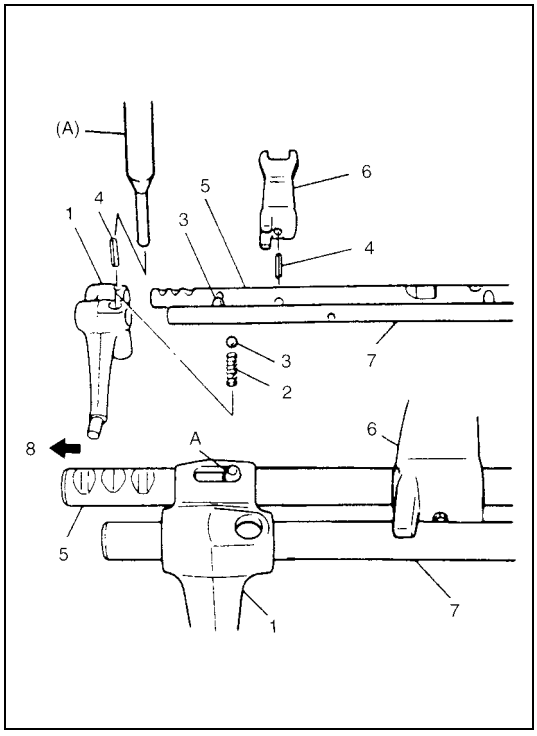

Disassemble component parts using special tool and hammer.

Special tool
(A) : 09922-85811

Assembly

Replace or correct parts as required and assemble shafts making sure that component parts are in proper order as shown in figure.

NOTE:

- **Distinguish reverse gear shift arm spring (Blue) (2) from low speed locating spring (Yellow).**
- **Install 2 steel balls (3) in reverse gear shift arm (1) without fail.**
- **Drive in spring pin for reverse gear shift arm (1) facing slit A toward front.**

4. Spring pin	7. 5th & reverse gear shift guide shaft
5. 5th & reverse gear shift shaft	8. 5th gear side
6. 5th & reverse gear shift yoke	A: Face pin slit toward 5thn gear side

Differential Components

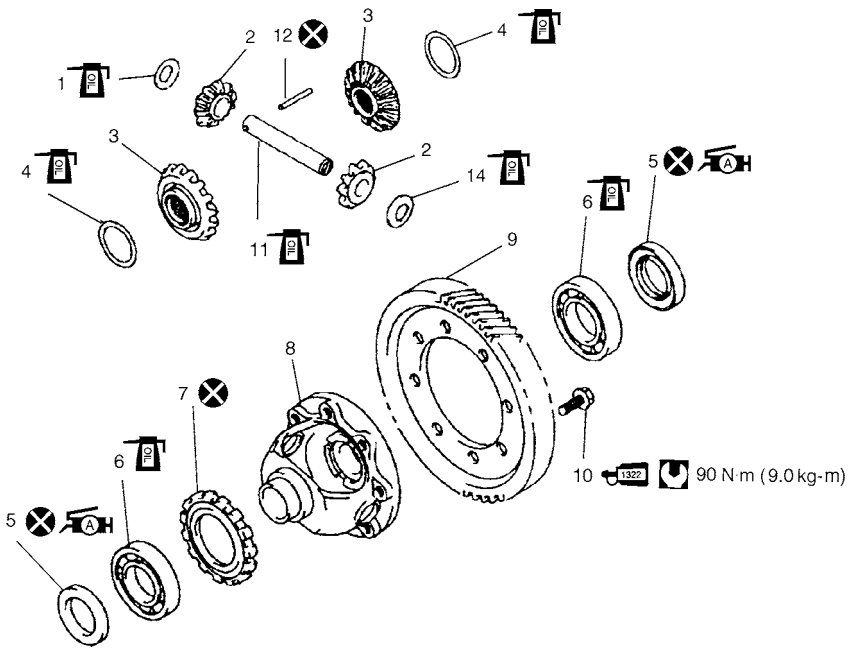

	1. Differential pinion washer		9. Final gear
	2. Differential side pinion gear	1322	10. Final gear bolt : Apply thread lock 99000-32110 to all around thread part of bolt
	3. Differential side gear		11. Differential pinion shaft
	4. Side gear washer		12. Differential pinion shaft pin
A	5. Differential side oil seal : Apply grease 99000-25010 to oil seal lip.		Tightening torque
	6. Differential side bearing		Do not reuse.
	7. Speed sensor ring	OIL	Apply transaxle oil.
	8. Differential case		

Differential Disassembly and Assembly

Disassembly

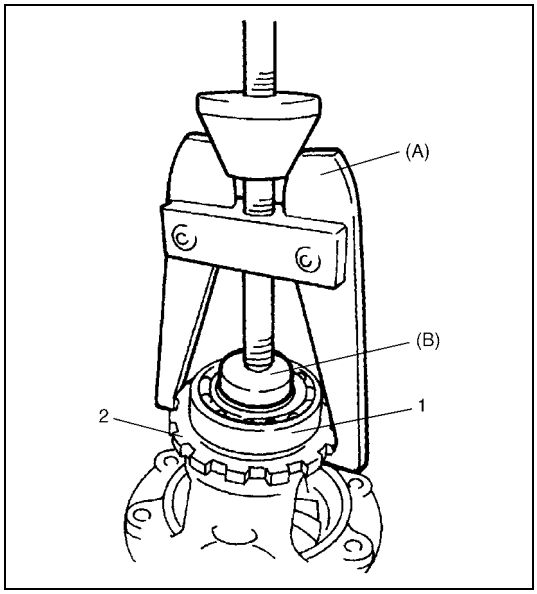

1) Using special tools, remove right bearing (1) and sensor rotor (2).

Special tool
(A) : 09913-60910
(B) : 09925-88210

2) Remove left bearing in the same manner at step 1).
3) Support differential case with soft jawed vise and remove final gear bolts then take out final gear.

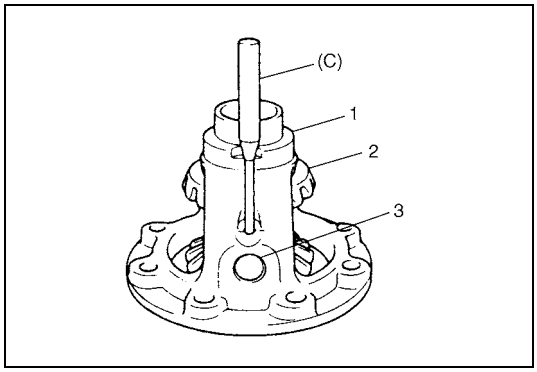

4) Using special tool and hammer, drive out differential pinion shaft pin and then disassemble component parts.

Special tool
(C) : 09922-85811

1.	Differential case
2.	Differential gear
3.	Differential pinion shaft

Assembly

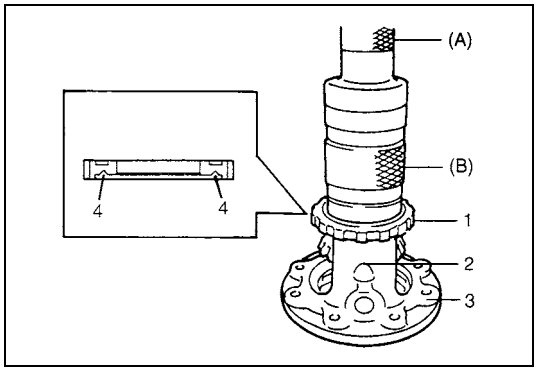

1) Drive in new differential pinion shaft pin (2) till the depth from differential case (3) surface is about 1 mm (0.04 in.).
2) Press-fit new sensor rotor (1) with groove (4) side downward as shown using special tools and copper hammer.

Special tool
(A) : 09913-75510
(B) : 09940-54910

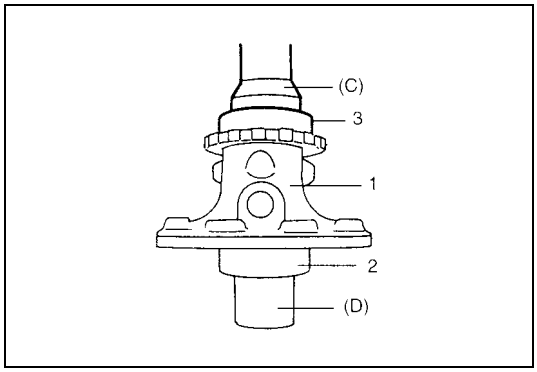

3) Press-fit left bearing (2) using special tools and copper hammer.
4) Support differential assembly (1) as illustrated so as to left bearing (2) is floating, and then press-fit right bearing (3) like left bearing in Step 3).

Special tool
(C) : 09951-76010
(D) : 09951-16060

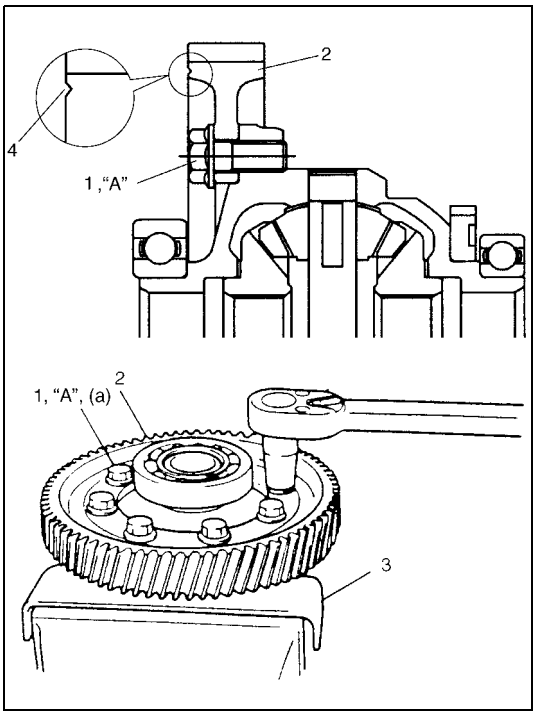

5) Hold differential assembly with soft jawed vise (3), install final gear (2) as shown in figure and then tighten bolts (1) with thread lock cement applied to specified torque.

NOTE:

Make sure to install final gear in correct installing direction.

CAUTION:

Use of any other bolts than specified ones is prohibited.

"A" : Thread lock cement 99000-32110

Tightening torque
Final gear bolts (a) : 90 N·m (9.0 kg-m, 65.0 lb-ft)

4. Groove

Differential Adjustment

Judging from abnormality noted before disassembly and what is found through visual check of component parts after disassembly, prepare replacing parts and proceed to reassembly. Make sure that all parts are clean.

1) Assemble differential gear and measure thrust play of differential gear as follows.

Differential gear thrust play
: 0.03 – 0.31 mm (0.001 – 0.012 in.)

- For left side

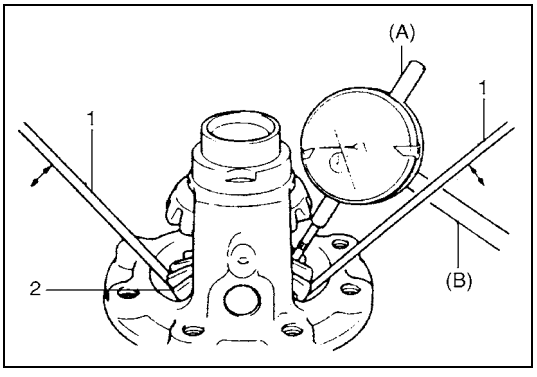

a) Hold differential assembly with soft jawed vise and apply measuring tip of dial gauge to top surface of gear.
b) Using 2 screwdrivers (1), move gear (2) up and down and read movement of dial gauge pointer.

Special tool
(A) : 09900-20606
(B) : 09900-20701

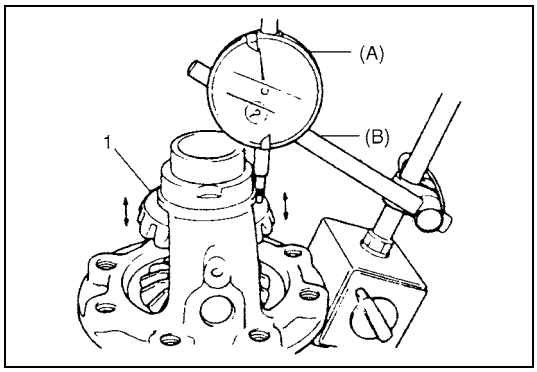

• For right side

a) Using similar procedure to the above, set dial gauge tip to gear (1) shoulder.
b) Move gear up and down by hand and read dial gauge.

Special tool
(A) : 09900-20606
(B) : 09900-20701

2) If thrust play is out of specification, select suitable thrust washer from among the following available size, install it and check again that specified gear play is obtained.

Available thrust washer thickness
0.9, 0.95, 1.0, 1.05, 1.1, 1.15 and 1.2 mm
(0.035, 0.037, 0.039, 0.041, 0.043, 0.045, and 0.047 in.)

Tightening Torque Specification

Fastening part	Tightening torque		
	N•m	kg-m	lb-ft
Transaxle oil level/filler and drain plugs	21	2.1	15.5
Oil gutter bolt	10	1.0	7.5
Final gear bolts	90	9.0	65.0
Reverse gear shift lever bolts	23	2.3	17.0
Transaxle case bolts	19	1.9	14.0
Reverse shaft bolt	23	2.3	17.0
Gear shift locating bolt	13	1.3	9.5
Left case plate screw and bolts	10	1.0	7.5
Countershaft nut	70	7.0	51.0
Side cover No.1 bolts	10	1.0	7.5
Side cover No.2 bolts	23	2.3	17.0
Gear shift guide case No.1 bolts	23	2.3	17.0
Gear shift guide case No.2 bolt	23	2.3	17.0
Gear shift interlock bolt	23	2.3	17.0
5th to reverse interlock guide bolt	23	2.3	17.0
Back up lamp switch	23	2.3	17.0
Gear shift control lever assembly mounting nut	13	1.3	9.5
Cable lock nut	5.5	0.55	4.0
Cable mounting bolt	5.5	0.55	4.0
Cable bracket bolt	50	5.0	37.5
Transaxle to engine bolts	85	8.5	63.5
Engine left mounting bracket bolts	55	5.5	42.0
Stiffener bolts	55	5.5	42.0
Engine rear mounting bolt	75	7.5	57.0
Engine rear mounting No.2 bracket bolts	55	5.5	42.0
Transaxle to engine rear mounting No.2 bracket bolt	55	5.5	42.0
Transaxle to engine nut	85	8.5	64.0
Clutch housing lower plate bolt	55	5.5	42.0
VSS bolt	5.5	0.55	4.0
Select lever bracket bolt	23	2.3	17.5

Required Service Material

Material	Recommended SUZUKI product (Part Number)	Use
Lithium grease	SUZUKI SUPER GREASE A (99000-25010)	• Oil seal lips • O-rings • Select lever boss • Select lever shaft bush
Sealant	SUZUKI BOND NO.1215 (99000-31110)	• Oil drain plug and filler/level plug • Locating spring bolts • Mating surface of transaxle case • Mating surface of side cover • Gear shift interlock bolt • 5th to reverse interlock guide bolt • Guide case bolts
Thread lock cement	THREAD LOCK 1322 (99000-32110)	• Reverse gear shift lever bolts • Oil gutter bolt • Reverse shaft bolt • Final gear bolts

Special Tool

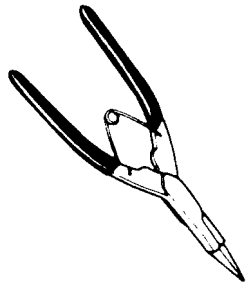 09900-06107 Snap ring pliers (Opening type)	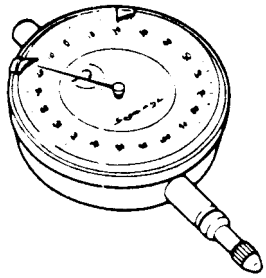 09900-20606 Dial gauge	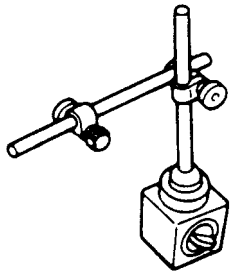 09900-20701 Magnetic stand	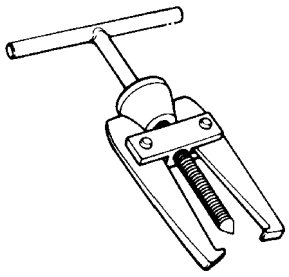 09913-60910 Bearing puller
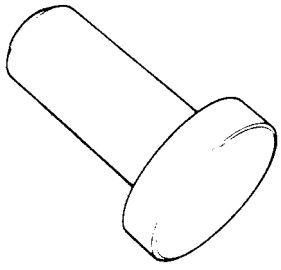 09913-75510 Bearing installer	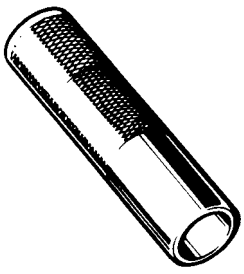 09913-80112 Bearing installer	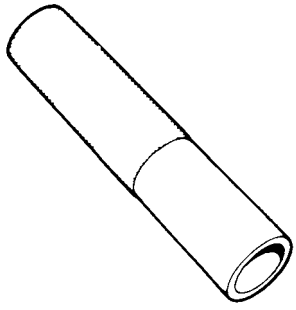 09913-84510 Bearing installer	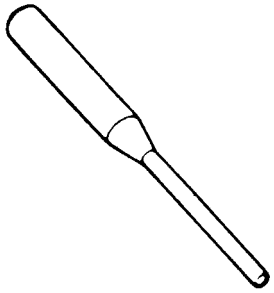 09922-85811 Spring pin remover 4.5 mm (0.18 in.)

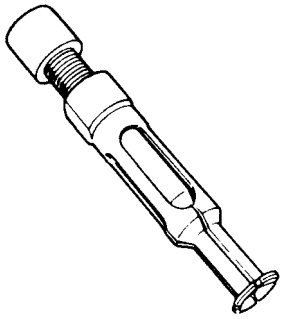 09923-74510 Bearing remover	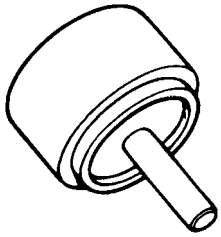 09923-78210 Bearing installer	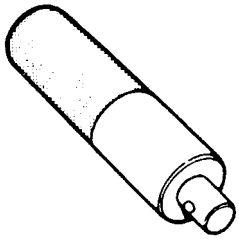 09924-74510 Installer attachment	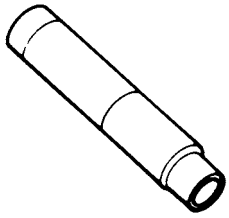 09925-18011 Bearing installer
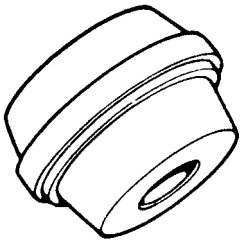 09925-68210 Bearing outer race installer	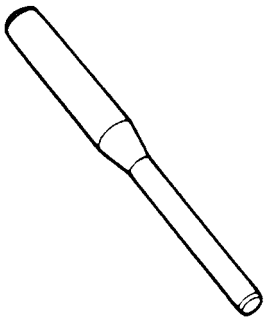 09925-78210 Spring pin remover 6 mm (0.24 in.)	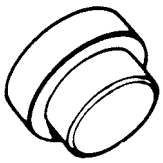 09925-88210 Bearing puller attachment	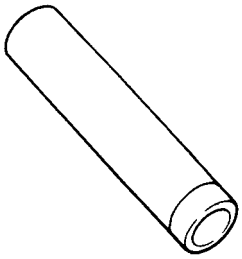 09925-98221 Bearing installer
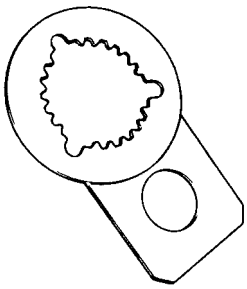 09927-76010 Gear holder	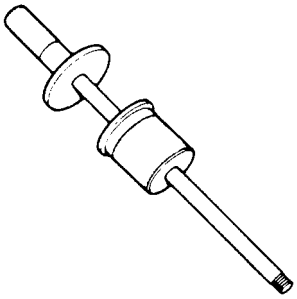 09930-30104 Sliding shaft	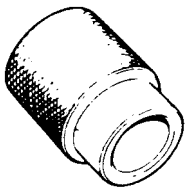 09940-53111 Bearing installer	 09940-54910 Sensor rotor installer
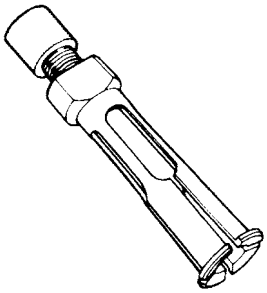 09941-64511 Bearing remover	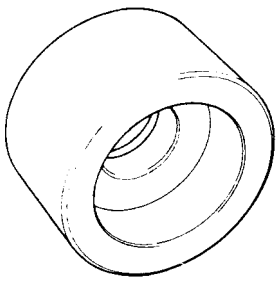 09951-16060 Bush remover	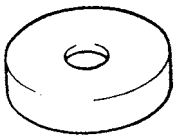 09951-46010 Bearing installer	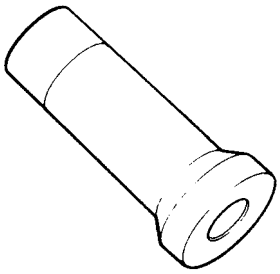 09951-76010 Bearing installer

SECTION 7C1

CLUTCH

WARNING:

For vehicles equipped with a Supplemental Restraint (Air Bag) System:

- **Service on and around the air bag system components or wiring must be performed only by an authorized SUZUKI dealer. Refer to "System Components and Wiring Location View" under "General Description" in air bag system section in order to confirm whether you are performing service on or near the air bag system components or wiring. Please observe all WARNINGS and "Service Precautions" under "On-Vehicle Service" in air bag system section before performing service on or around the air bag system components or wiring. Failure to follow WARNINGS could result in unintentional activation of the system or could render the system inoperative. Either of these two conditions may result in severe injury.**
- **Technical service work must be started at least 90 seconds after the ignition switch is turned to the "LOCK" position and the negative cable is disconnected from the battery. Otherwise, the system may be activated by reserve energy in the Sensing and Diagnostic Module (SDM).**

CONTENTS

General Description 7C1-2
Diagnosis 7C1-3
Diagnosis Table 7C1-3
On-Vehicle Service 7C1-4
Clutch Cable Components 7C1-4
Clutch Cable Removal and Installation 7C1-5
Clutch Cable Inspection 7C1-6
Clutch Pedal and Clutch Pedal Bracket Components 7C1-7
Clutch Pedal Inspection 7C1-8
Clutch pedal height 7C1-8
Clutch pedal free travel 7C1-8
Unit Repair Overhaul 7C1-9
Clutch Cover, Clutch Disc and Flywheel Components 7C1-9
Clutch Cover, Clutch Disc and Flywheel Removal and Installation 7C1-9
Clutch Cover, Clutch Disc and Flywheel Inspection 7C1-11
Input shaft bearing 7C1-11
Clutch disc 7C1-12
Clutch cover 7C1-12
Flywheel 7C1-12
Clutch Release Mechanism Removal and Installation 7C1-12
Clutch Release Mechanism Inspection 7C1-13
Clutch release bearing 7C1-13
Clutch release shaft 7C1-14
Tightening Torque Specification 7C1-15
Required Service Material 7C1-15
Special Tool 7C1-16

General Description

The clutch is a diaphragm-spring clutch of a dry single disc type. The diaphragm spring is of a tapering-finger type, which is a solid ring in the outer diameter part, with a series of tapered fingers pointing inward.

The disc, carrying four torsional coil springs, is positioned on the transmission input shaft with an involute spline fit.

The clutch cover is secured to the flywheel, and carries the diaphragm spring in such a way that the peripheral edge part of the spring pushes on the pressure plate against the flywheel (with the disc in between), when the clutch release bearing is held back. This is the engaged condition of the clutch.
Depressing the clutch pedal causes the release bearing to advance and pushes on the tips of the tapered fingers of the diaphragm spring. When this happens, the diaphragm spring pulls the pressure plate away from the flywheel, thereby interrupting the flow of drive from flywheel through clutch disc to transmission input shaft.

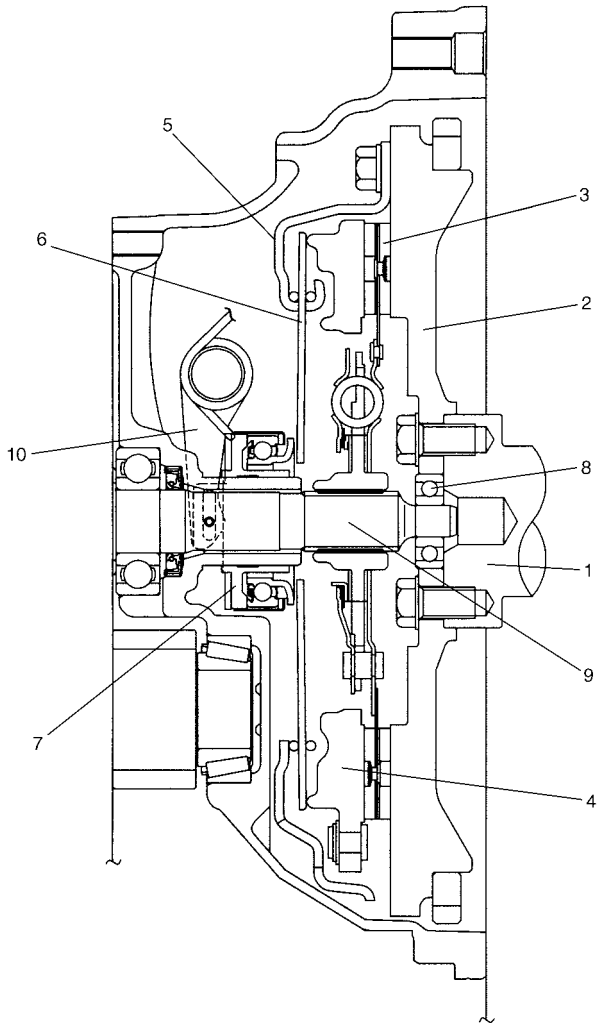

1. Crankshaft	6. Diaphragm spring
2. Flywheel	7. Release bearing
3. Clutch disc	8. Input shaft bearing
4. Pressure plate	9. Input shaft
5. Clutch cover	10. Release shaft

Diagnosis

Diagnosis Table

Condition	Possible Cause	Correction
Slipping	Improper clutch pedal free travel	Adjust free travel.
	Worn or oily clutch disc facing	Replace disc.
	Warped disc, pressure plate or flywheel surface	Replace disc, clutch cover or flywheel.
	Weakened diaphragm spring	Replace clutch cover.
	Rusted clutch cable	Replace cable.
Dragging clutch	Improper clutch pedal free travel	Adjust free travel.
	Weakened diaphragm spring, or worn spring tip	Replace clutch cover.
	Rusted input shaft splines	Lubricate.
	Damaged or worn splines of transmission input shaft	Replace input shaft.
	Excessively wobbly clutch disc	Replace disc.
	Clutch facings broken or dirty with oil	Replace disc.
Clutch vibration	Glazed (glass-like) clutch facings	Repair or replace disc.
	Clutch facings dirty with oil	Replace disc.
	Release bearing slides unsmoothly on input shaft bearing retainer	Lubricate or replace input shaft bearing retainer.
	Wobbly clutch disc, or poor facing contact	Replace disc.
	Weakened torsion springs in clutch disc	Replace disc.
	Clutch disc rivets loose	Replace disc.
	Distorted pressure plate or flywheel surface	Replace clutch cover or flywheel.
	Weakened engine mounting or loosened engine mounting bolt or nut	Retighten or replace mounting.
Noisy clutch	Worn or broken release bearing	Replace release bearing.
	Input shaft front bearing worn down	Replace input shaft bearing.
	Excessive rattle of clutch disc hub	Replace disc.
	Cracked clutch disc	Replace disc.
	Pressure plate and diaphragm spring rattling	Replace clutch cover.
Grabbing clutch	Clutch disc facings soaked with oil	Replace disc.
	Clutch disc facings excessively worn	Replace disc.
	Rivet heads showing out of facing	Replace disc.
	Weakened torsion springs	Replace disc.

On-Vehicle Service

Clutch Cable Components

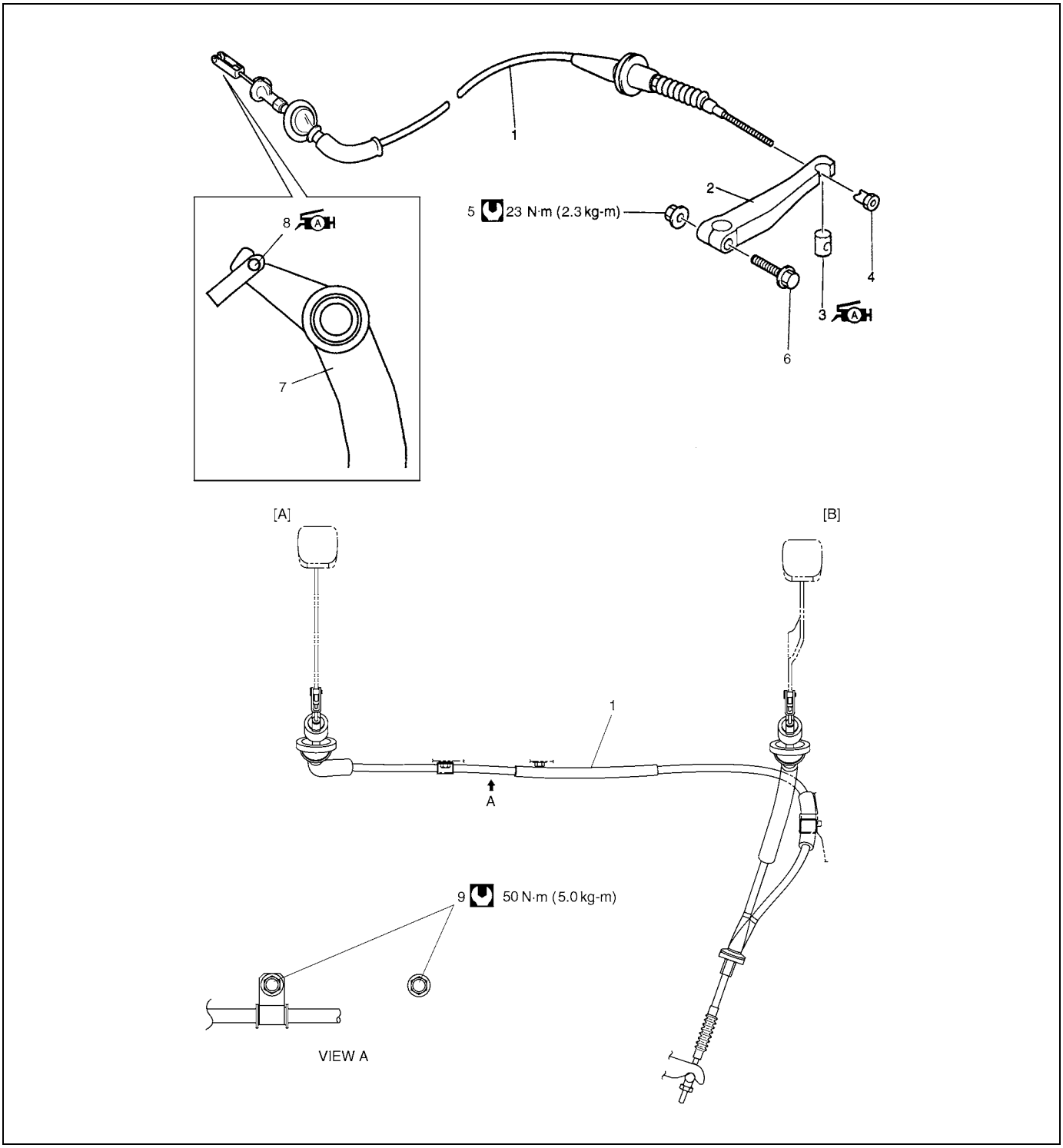

	[A]: For RH vehicle		5. Clutch release lever nut
	[B]: For LH vehicle		6. Clutch release lever bolt
	1. Clutch cable		7. Clutch pedal
A	2. Clutch release lever	A	8. Clutch cable hook : Apply grease 99000-25010 to cable hook.
	3. Clutch cable joint pin : Apply grease 99000-25010 to joint pin.		9. Clutch cable clamp bolt
	4. Clutch cable joint nut		Tightening torque

Clutch Cable Removal and Installation

Removal

1) Disconnect negative cable at battery.

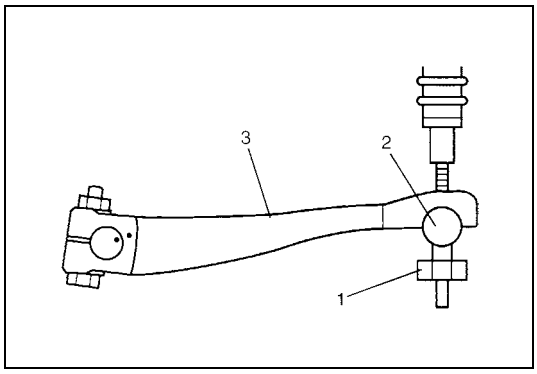

2) Remove clutch cable joint nut (1).
3) Remove joint pin (2) from clutch release lever (3).

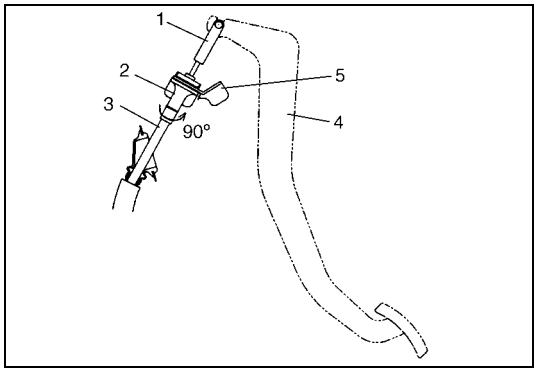

4) Disconnect cable hook (1) from clutch pedal (4).
5) Remove clutch cable (3) from bracket (5) by turning cable cap (2) about 90° as shown.

Installation

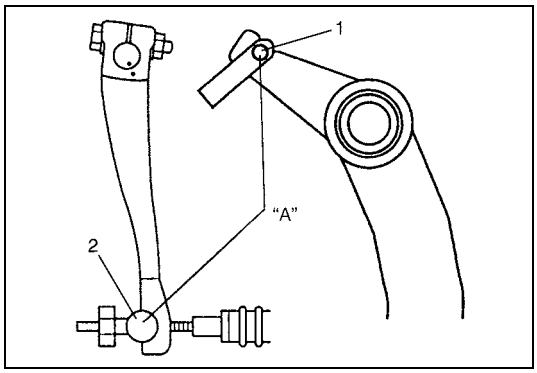

1) Apply grease to cable end hook (1) and also joint pin (2) before installing cable.

"A" : Grease 99000-25010

2) Hook cable end with pedal using screwdriver or long nose pliers from cabin inside, then join inner cable wire joint pin in release lever.

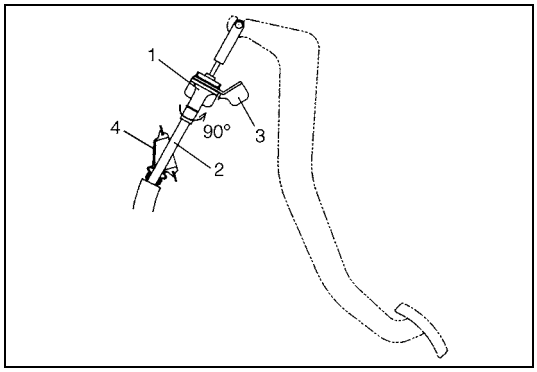

3) Install clutch cable (2) to bracket (3) by turning cable cap (1) about 90° as shown.
4) Screw in joint nut and adjust clutch pedal free travel referring to "Clutch pedal free travel" in this section.

NOTE:

Take care that cable grommet (4) has specific installing direction as shown in the figure.

5) Check clutch for proper function with engine running.

Clutch Cable Inspection

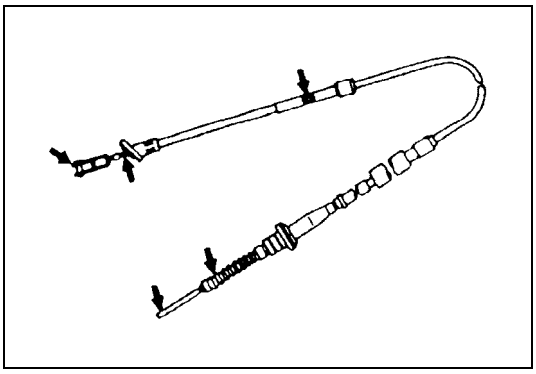

Inspect clutch cable and replace it for any of the following conditions.

- Excessive cable friction
- Frayed cable
- Bent or kinked cable
- Broken boots
- Worn end

Clutch Pedal and Clutch Pedal Bracket Components

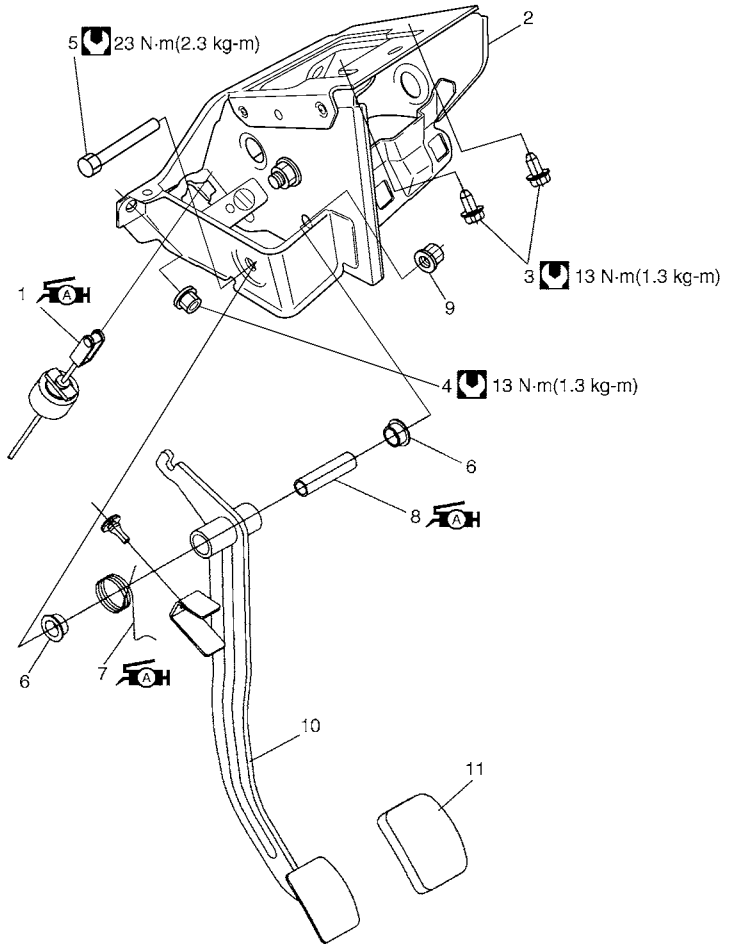

A	1. Clutch cable hook : Apply grease 99000-25010 to cable hook.	A	7. Pedal spring : Apply grease 99000-25010 to inside surface of spring.
	2. Clutch pedal bracket	A	8. Pedal shaft spacer : Apply grease 99000-25010 to outside surface of spacer.
	3. Pedal bracket bolt : Pedal bracket bolt must be tighten after pedal bracket nut.		9. Pedal shaft nut
	4. Pedal bracket nut		10. Clutch pedal
	5. Pedal shaft		11. Pedal pad
	6. Pedal bush		Tightening torque

Clutch Pedal Inspection

Clutch pedal height

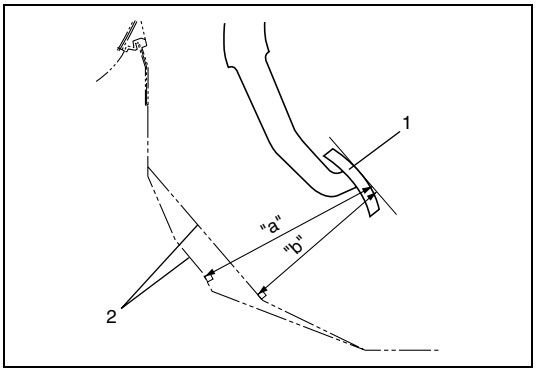

Measure clutch pedal height (1), distance between dash panel silencer (2) and clutch pedal (1).

Reference height
"a" : 195 – 205 mm (7.80 – 8.20 in.) for RH vehicle
"b" : 163 – 173 mm (6.52 – 6.92 in.) for LH vehicle

Clutch pedal free travel

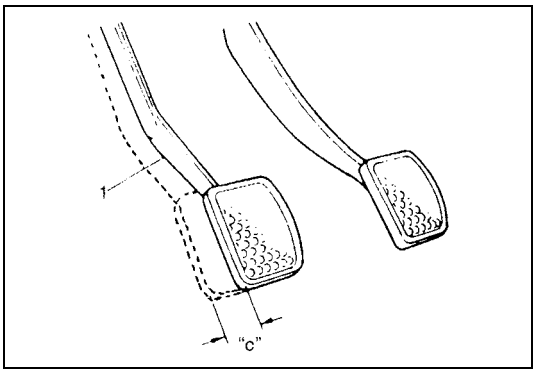

1) Depress clutch pedal (1), stop the moment clutch resistance is felt, and measure distance (clutch pedal free travel). Free travel should be within the following specification.

Pedal free travel
"c" : 15 – 20 mm (0.6 – 0.8 in.)

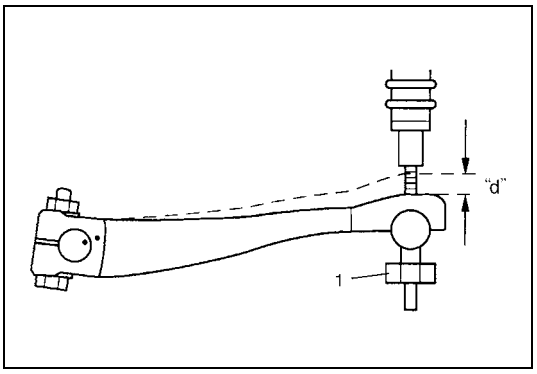

2) If free travel is out of specification, adjust it with cable joint nut (1).

Release lever free travel (Reference)
"d" : 0 – 2 mm (0 – 0.08 in.)

3) After checking clutch pedal free travel, also check clutch for proper function with engine running.

Unit Repair Overhaul

Clutch Cover, Clutch Disc and Flywheel Components

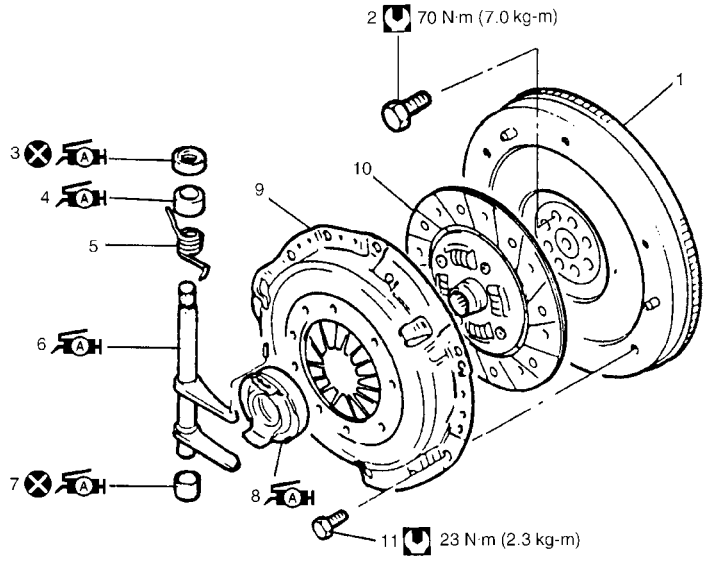

	1. Flywheel		8. Release bearing : Apply grease 99000-25010 to joint of bearing and release shaft and also bearing inside. (0.3 g (0.01 oz))
	2. Flywheel bolt		9. Clutch cover
	3. Clutch release shaft seal : Apply grease 99000-25010 to seal lip. (0.3 g (0.01 oz))		10. Clutch disc
	4. Clutch release shaft No.2 bush : Apply grease 99000-25010 to bush inside. (0.3 g (0.01 oz))		11. Clutch cover bolt
	5. Return spring		Tightening torque
	6. Clutch release shaft Apply grease 99000-25010 to the end of release shaft arm. (0.3 g (0.01 oz))		Do not reuse.
	7. Clutch release shaft No.1 bush : Apply grease 99000-25010 to bush inside. (0.3 g (0.01 oz))		

Clutch Cover, Clutch Disc and Flywheel Removal and Installation

Removal

1) Dismount transaxle assembly referring to “Transaxle Unit Dismounting and Remounting” in Section 7A1.

2) Hold flywheel transaxle with special tool (A) and remove clutch cover bolts (1), clutch cover (2) and clutch disc.

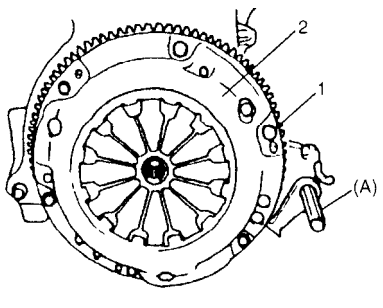

Special tool
(A) : 09924-17810

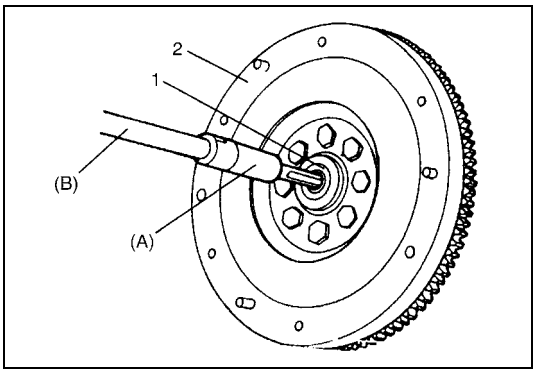

3) Pull out input shaft bearing (1) from using the following special tools.

Special tool
(A) : 09921-26020
(B) : 09930-30104

2. Flywheel

Installation

NOTE:

Before assembling, make sure that flywheel surface and pressure plate surface have been cleaned and dried thoroughly.

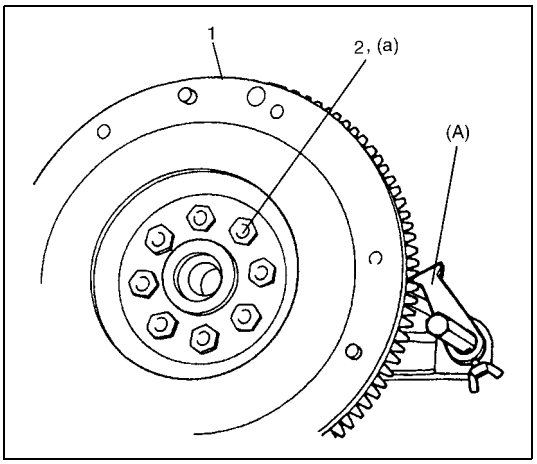

1) Install flywheel (1) to crankshaft and tighten bolts (2) to specified torque.

Special tool
(A) : 09924-17810

Tightening torque
Flywheel bolts (a) : 70 N·m (7.0 kg-m, 50.5 lb-ft)

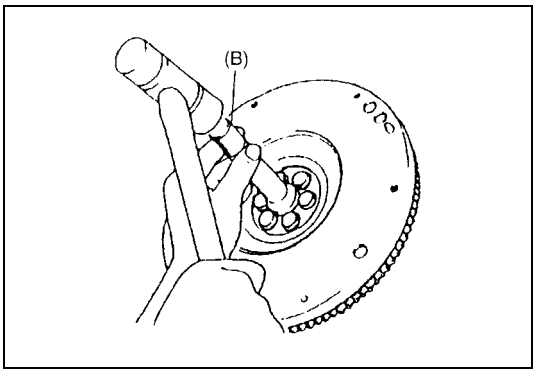

2) Using special tool, install input shaft bearing to flywheel.

Special tool
(B) : 09925-98210

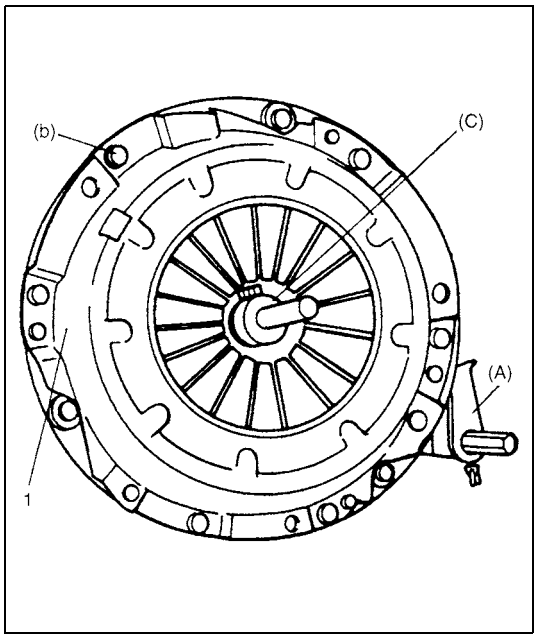

3) Aligning clutch disc to flywheel center using special tool, install clutch cover (1) and bolts. Then tighten bolts to specification.

NOTE:

- **While tightening clutch cover bolts, compress clutch disc with special tool (C) by hand so that disc centered.**
- **Tighten cover bolts little by little evenly in diagonal order.**

Special tool
(A) : 09924-17810
(C) : 09923-36320

Tightening torque
Clutch cover bolts (b) : 23 N·m (2.3 kg-m, 16.5 lb-ft)

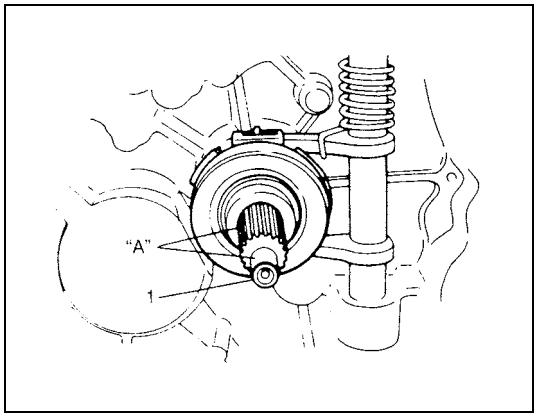

4) Slightly apply grease to input shaft (1), then join transaxle assembly with engine referring to "Transaxle Unit Dismounting and Remounting" in Section 7A1.

"A" : Grease, 99000-25210

NOTE:

When inserting transaxle input shaft to clutch disc, turn crankshaft little by little to match splines.

Clutch Cover, Clutch Disc and Flywheel Inspection.

Input shaft bearing

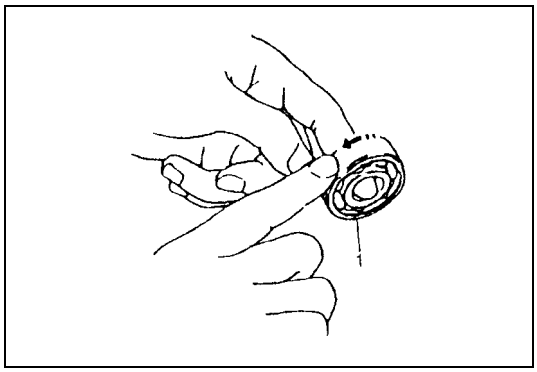

Check bearing (1) for smooth rotation and replace it if abnormality is found.

Clutch disc

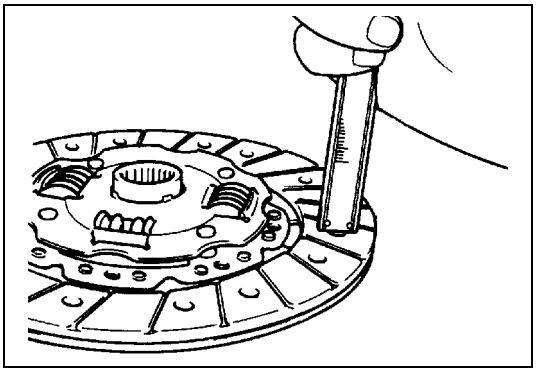

Measure depth of rivet head depression, i.e. distance between rivet head and facing surface. If depression is found to have reached service limit at any of holes, replace disc assembly.

Rivet head depth
Standard : 1.65 – 2.25 mm (0.06 – 0.09 in.)
Service limit : 0.5 mm (0.02 in.)

Clutch cover

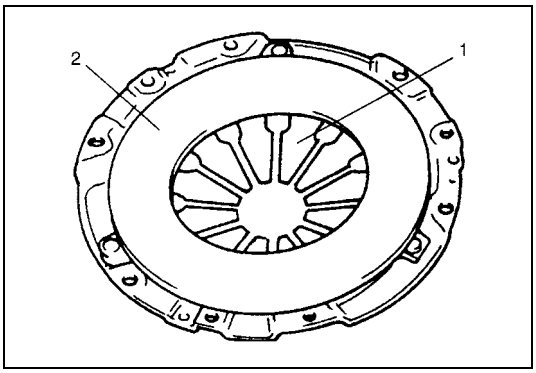

1) Check diaphragm spring (1) for abnormal wear or damage.
2) Inspect pressure plate (2) for wear or heat spots.
3) If abnormality is found, replace clutch cover. Do not disassemble it into diaphragm spring and pressure plate (2).

Flywheel

Check surface contacting clutch disc for abnormal wear or heat spots. Replace or repair as required.

Clutch Release Mechanism Removal and Installation

Removal

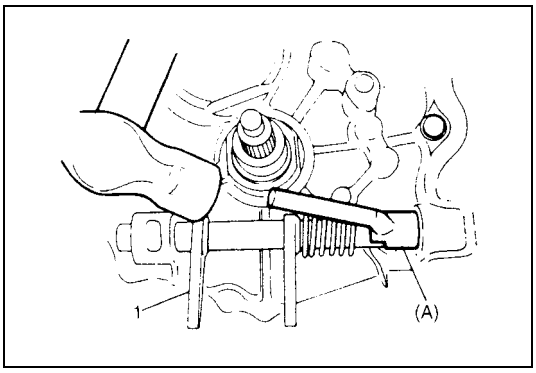

1) Remove release lever by loosening its bolt.
2) Take out release bearing by turning release shaft (1).
3) Unhook return spring (2) using pliers.
4) Drive out No.2 bush using special tool and hammer. Release shaft seal will also be pushed out.

Special tool
(A) : 09922-46010

5) Remove release shaft (1) and return spring (2).

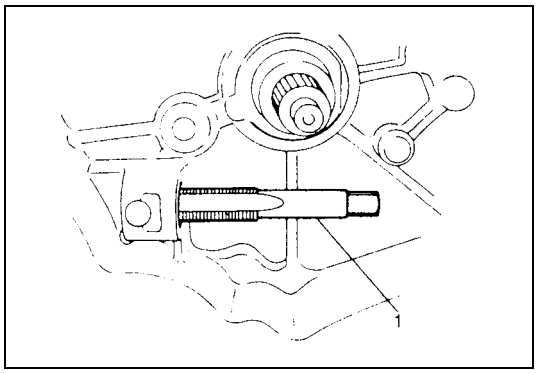

6) Install tap (M16 X 1.5) (1) to clutch release shaft No.1 bush.

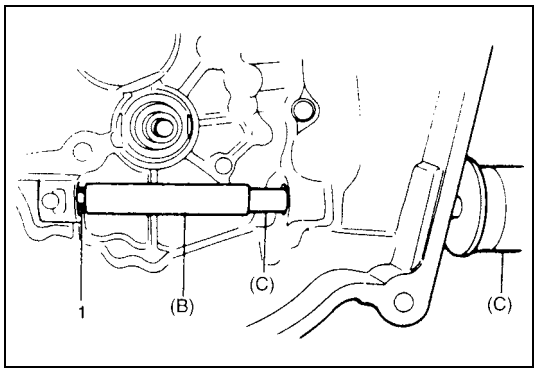

7) Pull out No.1 bush using tap (1) and special tools.

Special tool
(B) : 09923-46020
(C) : 09930-30104

Installation

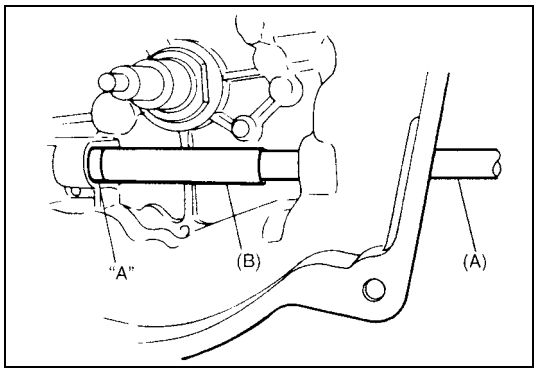

1) Drive in a new No.1 bush using special tools, and then apply grease to bush inside.

Special tool
(A) : 09930-30104
(B) : 09923-46030

"A" : Grease 99000-25010

2) Install release shaft with return spring.

Clutch Release Mechanism Inspection

Clutch release bearing

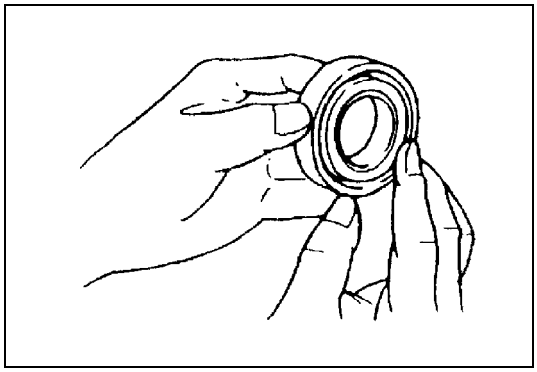

Check clutch release bearing for smooth rotation.
If abnormality is found, replace it.

CAUTION:
Do not wash release bearing. Washing may cause grease leakage and consequential bearing damage.

Clutch release shaft

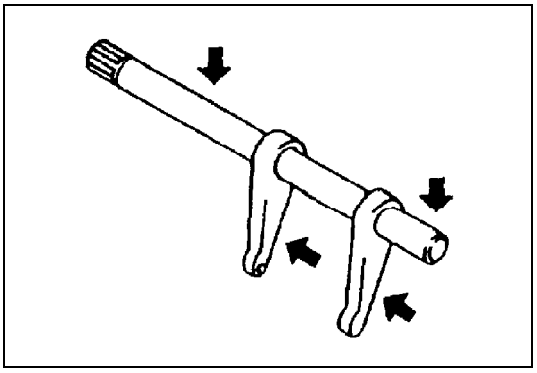

Check clutch release shaft and its pin for deflection or damage. If abnormality is found, replace it.

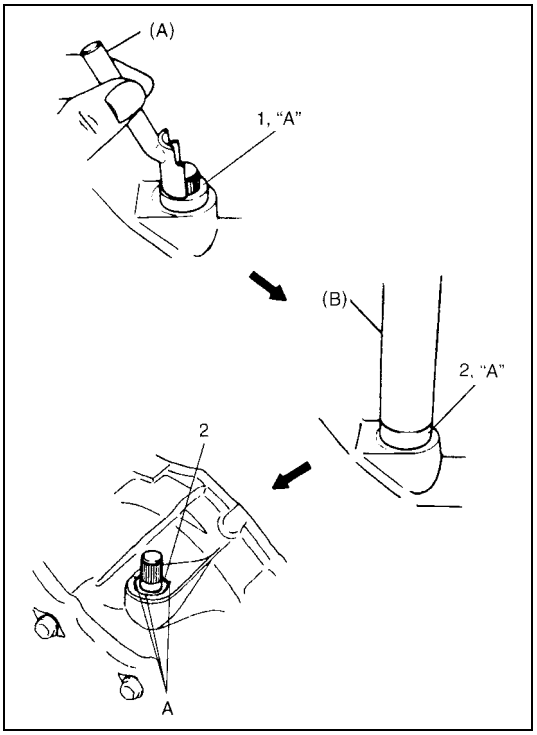

3) Apply grease to No.2 bush (1) inside and press-fit it using the same special tool as in removal.

"A" : Grease 99000-25010

Special tool
(A) : 09922-46010

4) Coat grease to shaft seal (2) lip and then install it till it is flush with case surface. Use special tool for this installation and face seal lip downward (inside).

"A" : Grease 99000-25010

Special tool
(B) : 09925-98221

5) Caulk seal at A using caulking tool and hammer.

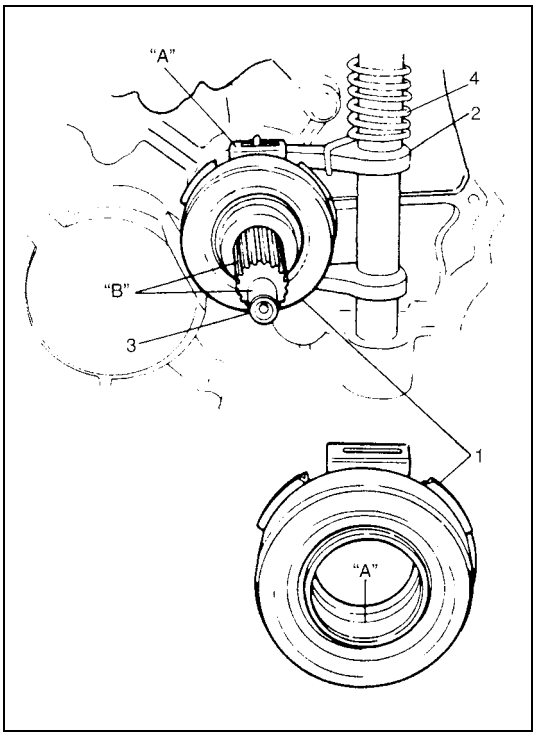

6) Hook return spring (4).
7) Apply grease to release bearing (1) inside and release shaft arm (2), then set release bearing (1).

"A" : Grease 99000-25010

8) Apply small amount of grease to input shaft (3) spline (0.3 g) (0.01 oz) and front end (0.15 g) (0.005 oz) as well.

"B" : Grease 99000-25210

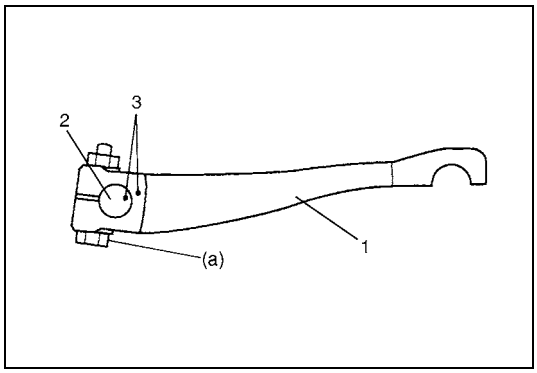

9) Set release lever (1) to release shaft (2) aligning their punch marks (3), then tighten bolt.

Tightening torque
Release lever bolt (a) : 23 N·m (2.3 kg-m, 16.5 lb-ft)

Tightening Torque Specification

Fastening part	Tightening torque		
	N•m	kg-m	lb-ft
Flywheel bolts	70	7.0	50.5
Clutch cover bolts	23	2.3	16.5
Release lever bolt	23	2.3	16.5
Pedal bracket bolt	13	1.3	9.5
Pedal bracket nut	13	1.3	9.5
Pedal shaft nut	23	2.3	16.5
Clutch cable clamp bolt	50	5.0	36.5

Required Service Material

Material	Recommended SUZUKI product (Part Number)	Use
Lithium grease	SUZUKI SUPER GREASE A (99000-25010)	• Cable end hook and joint pin. • Release shaft bushes and seal. • Release shaft. • Release bearing inside. • Pedal spring. • Pedal shaft spacer.
	SUZUKI SUPER GREASE I (99000-25210)	Input shaft spline and front end.

Special Tool

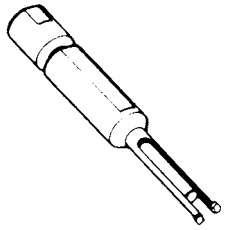 09921-26020 Bearing remover	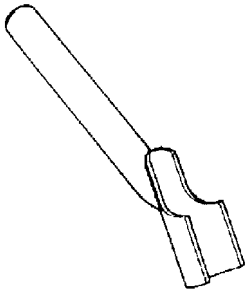 09922-46010 Bush remover	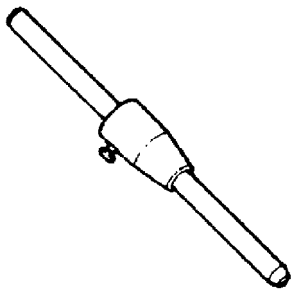 09923-36320 Clutch center guide	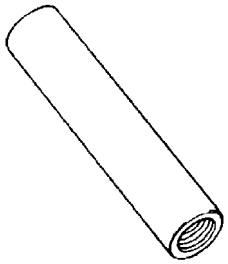 09923-46020 Joint pipe
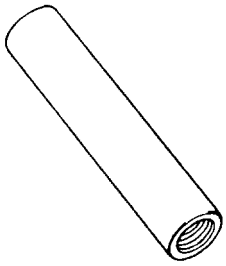 09923-46030 Joint pipe	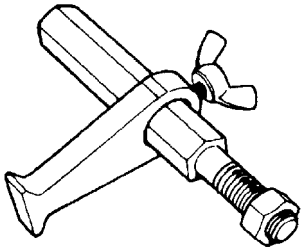 09924-17810 Flywheel holder	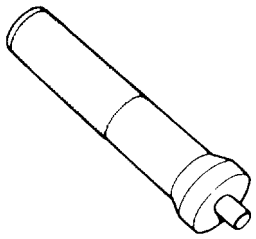 09925-98210 Input shaft bearing installer	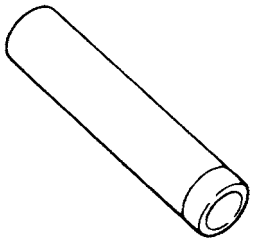 09925-98221 Bearing installer
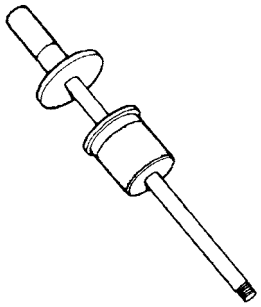 09930-30104 Sliding shaft			

SECTION 7D

TRANSFER

CONTENTS

General Description 7D-2
Transfer Description 7D-2
Diagnosis 7D-2
Transfer Diagnosis 7D-2
On-Vehicle Service 7D-3
Transfer Oil Change 7D-3
Transfer Mounting Components 7D-4
Transfer Dismounting and Mounting 7D-4
Unit Repair Overhaul 7D-8
Transfer Components 7D-8
Transfer Disassembly and Assembly 7D-9
Transfer Inspection 7D-12
Reduction Driven Gear Disassembly and Assembly 7D-12
Reduction Drive Gear Disassembly and Assembly 7D-14
Intermediate Shaft Disassembly and Assembly 7D-15
Transfer Output Retainer Disassembly and Assembly 7D-16
Bevel Gear Shim Adjustment 7D-19
Transfer Output Retainer Adjustment 7D-20
Bevel Gear Back Lash Measurement and Adjustment 7D-22
Bevel gear tooth contact table 7D-24
Tightening Torque Specification 7D-25
Required Service Material 7D-25
Special Tool 7D-26

General Description

Transfer Description

The transfer consists of parts as shown in figure.

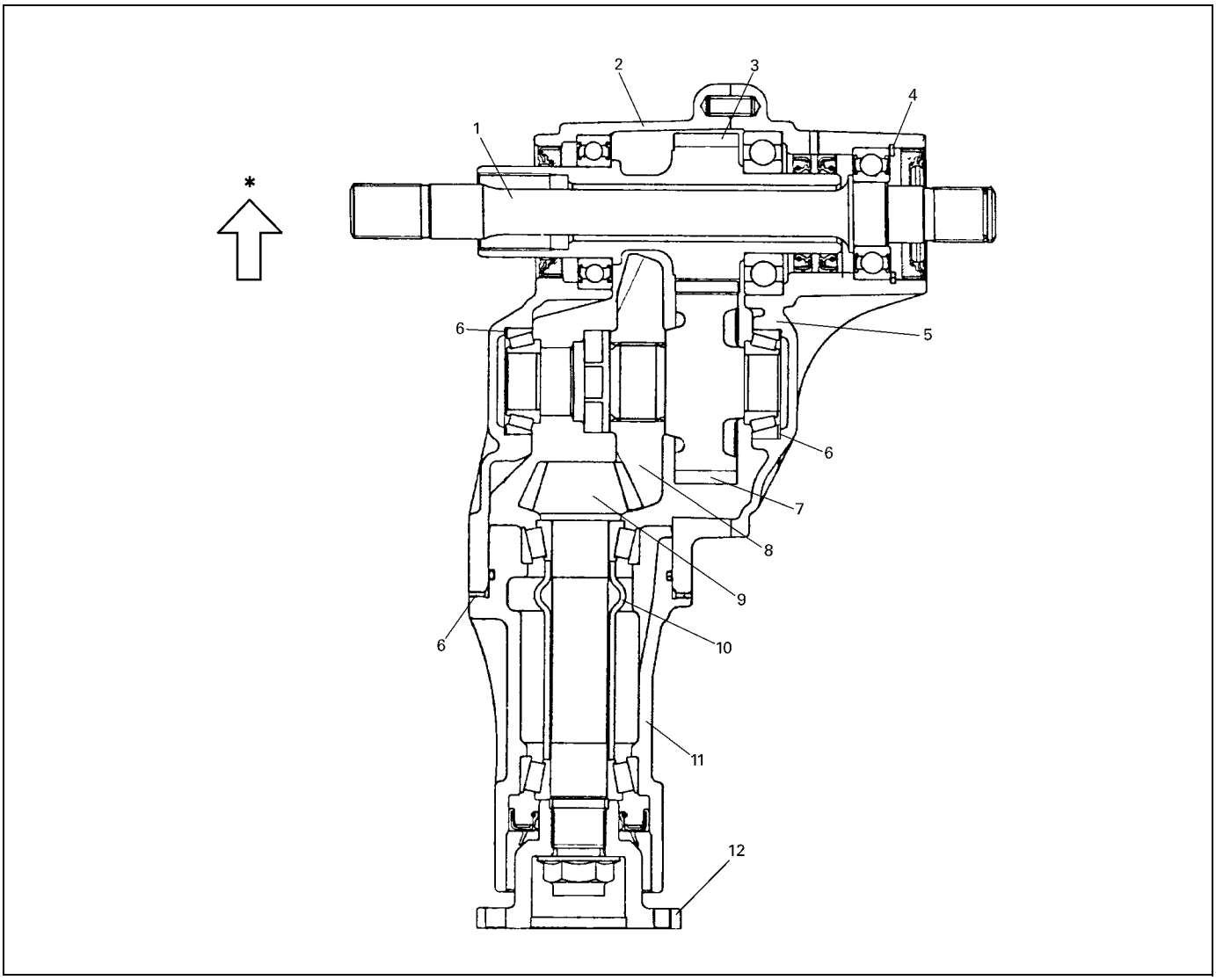

1. Intermediate shaft	6. Shim	11. Transfer output retainer
2. Left case	7. Reduction driven gear	12. Flange
3. Reduction drive gear	8. Bevel gear	✱: Forward
4. Circlip	9. Bevel pinion shaft	
5. Right case	10. Pinion shaft spacer	

Diagnosis

Transfer Diagnosis

Condition	Possible Cause	Correction
Noise	Inadequate or insufficient lubricant	Replenish.
	Damaged or worn bearing(s)	Replace.
	Damaged or worn gear(s)	Replace.
	Damaged or worn chamfered tooth on sleeve or gear	Replace.
	Preload of taper roller bearing is reduced	Adjust.

On-Vehicle Service

Transfer Oil Change

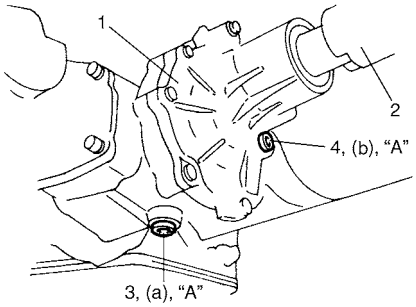

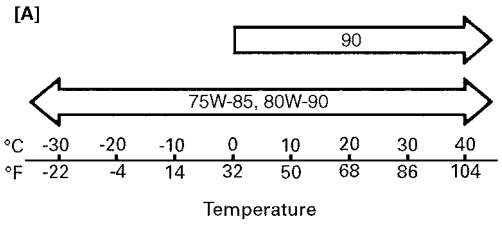

1) Before changing or inspecting oil, be sure to stop engine and lift vehicle horizontally.
2) With vehicle lifted up, check oil level and leakage. If leakage exists, correct or repair it.
3) Drain old oil, tighten drain plug (3) after applying sealant to its thread and fill new specified oil as shown below by specified amount (roughly up to level hole).

"A" : Sealant 99000-31230

Tightening torque
Transfer oil drain plug (a) : 21 N·m (2.1 kg-m, 15.5 lb-ft)

NOTE:

- **It is highly recommended to use SAE 80W-90 Hypoid gear oil API GL-5.**
- **Whenever vehicle is hoisted for any other service work than oil change, also be sure to check for oil leakage.**

Transfer gear oil
:Hypoid gear oil API GL-5
For oil viscosity, refer to the chart [A].

Oil Capacity
: 0.5 liters (1.1/0.9 US/Imp. pt)

4) Torque level/filler plug (4) as specified below after applying sealant to its thread.

"A" : Sealant 99000-31230

Tightening torque
Transfer oil level / filler plug
(b) : 21 N·m (2.1 kg-m, 15.5 lb-ft)

1. Transfer
2. Drive shaft

Transfer Mounting Components

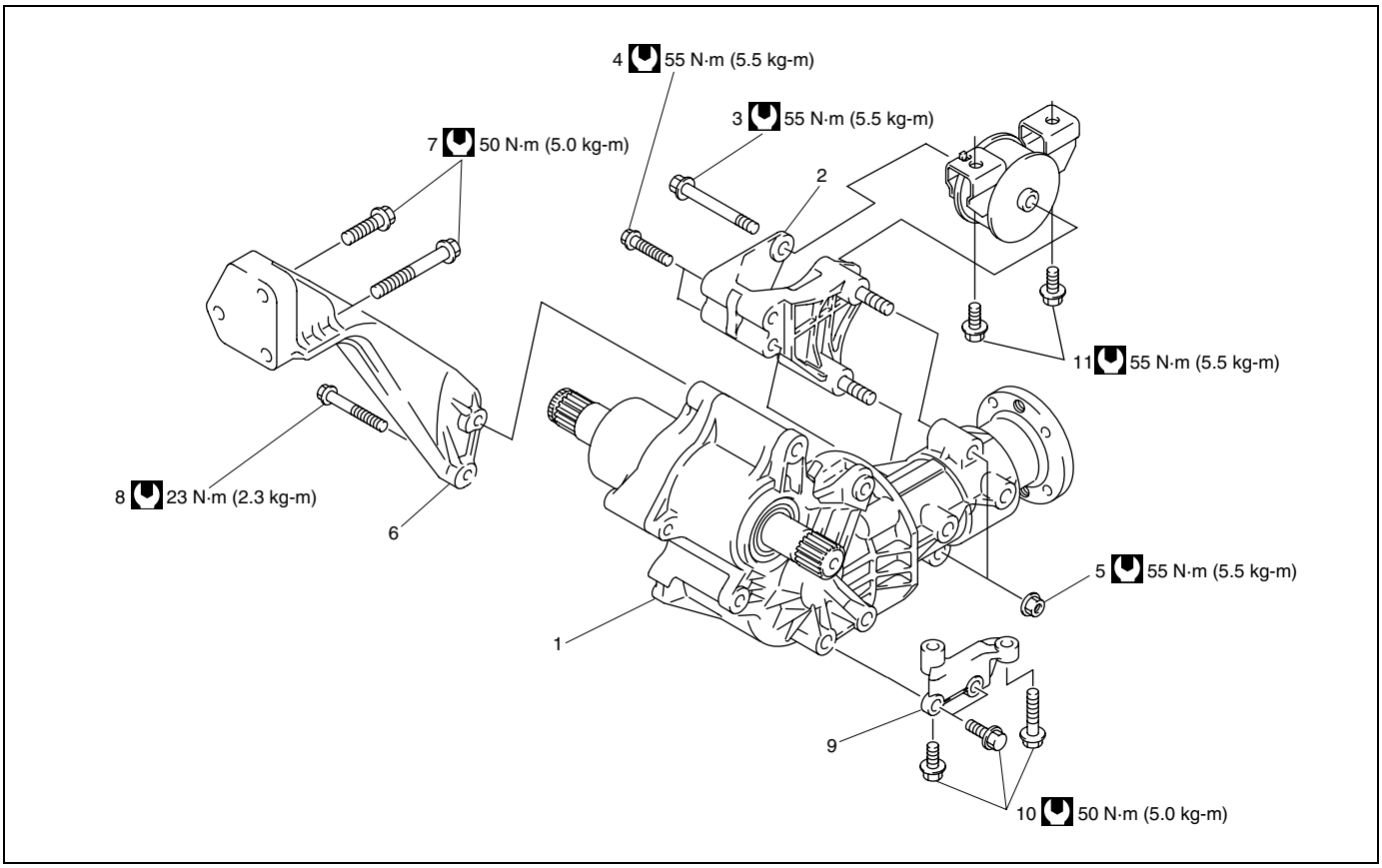

1. Transfer assy	7. Transfer to engine stiffener No.1 bolts
2. Mounting bracket	8. Transfer to engine stiffener No.2 bolts
3. Transfer mounting bolt	9. Transfer to transaxle stiffener
4. Transfer rear mounting bracket No.2 bolts	10. Transfer to transaxle stiffener bolts
5. Transfer rear mounting bracket nuts	11. Transfer rear mounting bracket bolts
6. Transfer to engine stiffener	Tightening torque

Transfer Dismounting and Mounting

Dismounting

1) Disconnect negative cable at battery.
2) Hoist vehicle and remove wheels.
3) Drain transaxle oil referring to “Manual Transaxle Oil Change” in Section 7A1.
4) Drain transfer oil referring to “Transfer Oil Change” in this section.

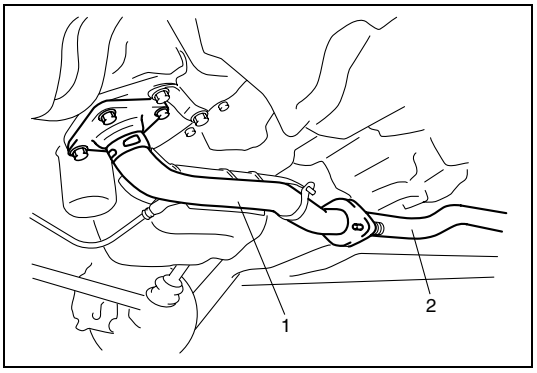

5) Remove exhaust No.1 pipe (1).
6) Remove propeller shaft referring to “Propeller Shaft Removal and Installation” in Section 4B.
7) Remove right side drive shaft (1) referring to “Front Drive Shaft Assembly Removal and Installation” in Section 4A.

2. Exhaust No.2 pipe

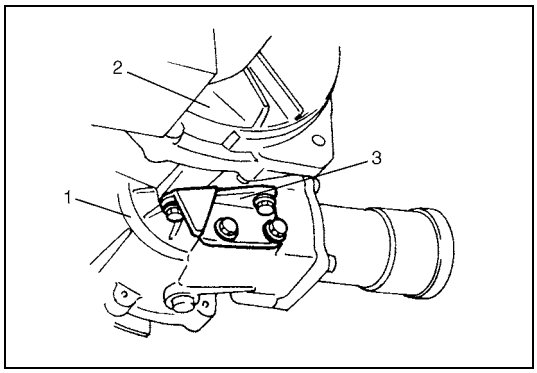

8) Remove transfer to transaxle stiffener (3).

1.	Transfer
2.	Transaxle

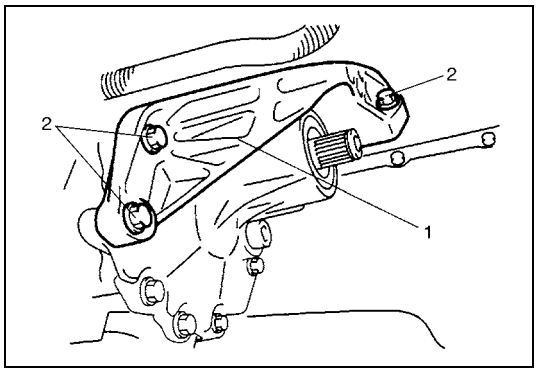

9) Remove transfer to engine stiffener (1) removing stiffener bolts (2), if equipped.

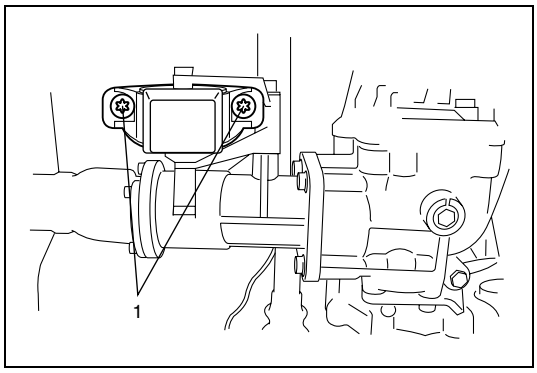

10) With transaxle assembly held on jack, remove rear mounting bracket bolts (1).
11) Remove transfer to transaxle bolts and draw out transfer assembly from transaxle assembly.

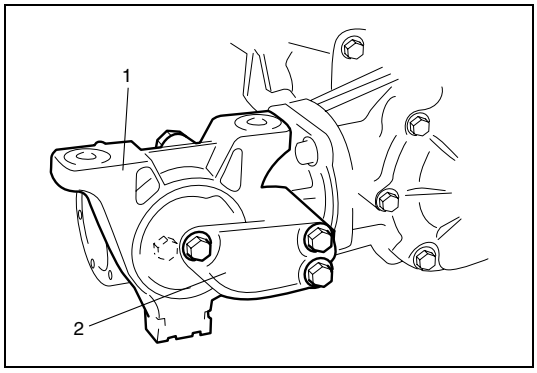

12) Remove mounting bracket (2) with mounting (1) from transfer assembly.

Mounting

Reverse dismounting procedure for installation noting the following.

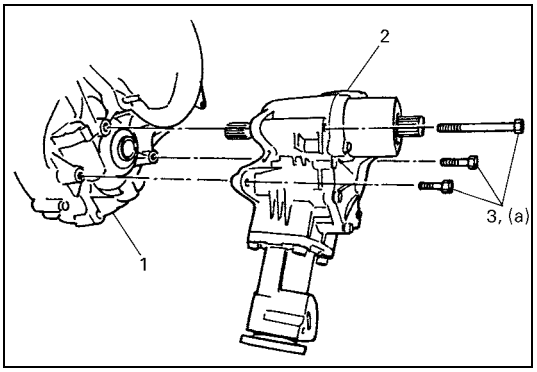

- Tighten transfer mounting bolts (3) to specified torque.

Tightening torque
Transfer mounting bolts (a) : 50 N·m (5.0 kg-m, 36.5 lb-ft)

1.	Transaxle
2.	Transfer assembly

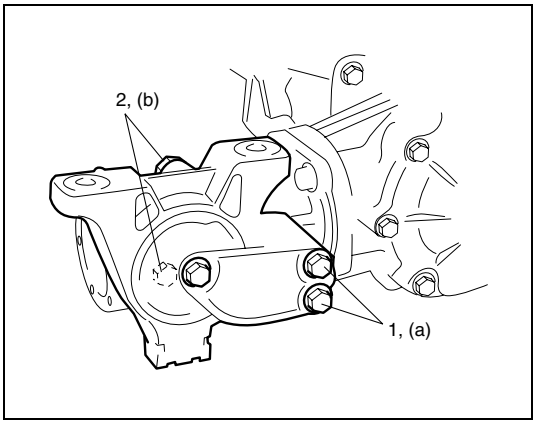

- Tighten transfer rear mounting bracket No.2 bolts (1) and transfer rear mounting bracket nuts (2) to specified torque.

Tightening torque
Transfer rear mounting bracket No.2 bolts
(a) : 55 N·m (5.5 kg-m, 40.0 lb-ft)
Transfer rear mounting bracket nuts
(b) : 55 N·m (5.5 kg-m, 40.0 lb-ft)

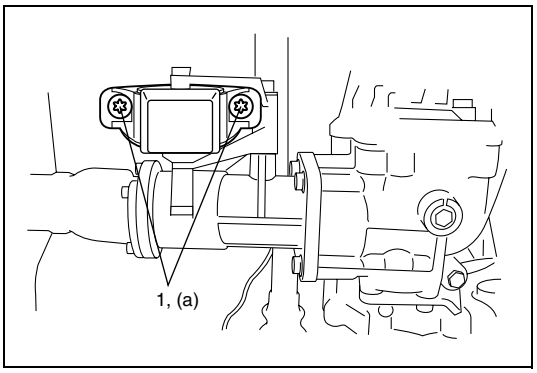

- Tighten transfer rear mounting bracket bolts (1) to specified torque.

Tightening torque
Transfer rear mounting bracket bolts
(a) : 55 N·m (5.5 kg-m, 40.0 lb-ft)

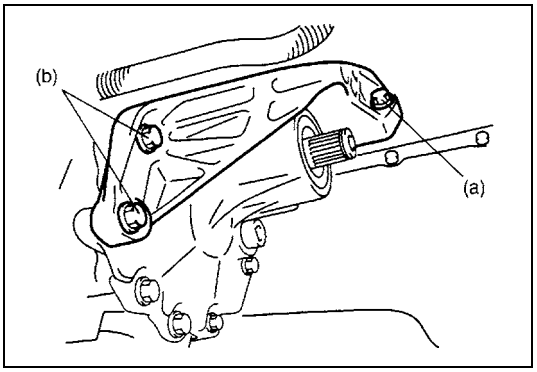

- Tighten transfer to engine stiffener bolts to specified torque, if equipped.

Tightening torque
Transfer to engine stiffener No.1 bolts
(a) : 50 N·m (5.0 kg-m, 36.5 lb-ft)
Transfer to engine stiffener No.2 bolts
(b) : 23 N·m (2.3 kg-m, 17.0 lb-ft)

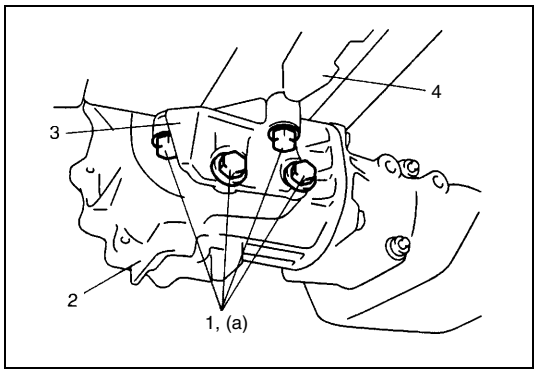

- Tighten transfer to transaxle stiffener bolts (1) to specified torque.

Tightening torque
Transfer to transaxle stiffener bolts (a) : 50 N·m (5.0 kg-m, 36.5 lb-ft)

2.	Transfer
3.	Stiffener
4.	Transaxle

- Install exhaust No.1 pipe referring to “Exhaust System Components” in Section 6K.
- Install right side drive shaft referring to “Front Drive Shaft Assembly Removal and Installation” in Section 4A.
- Install propeller shaft referring to “Propeller Shaft Removal and Installation” in Section 4B.
- Fill transfer with transfer oil referring to “Transfer Oil Change” in this section.

Unit Repair Overhaul

Transfer Components

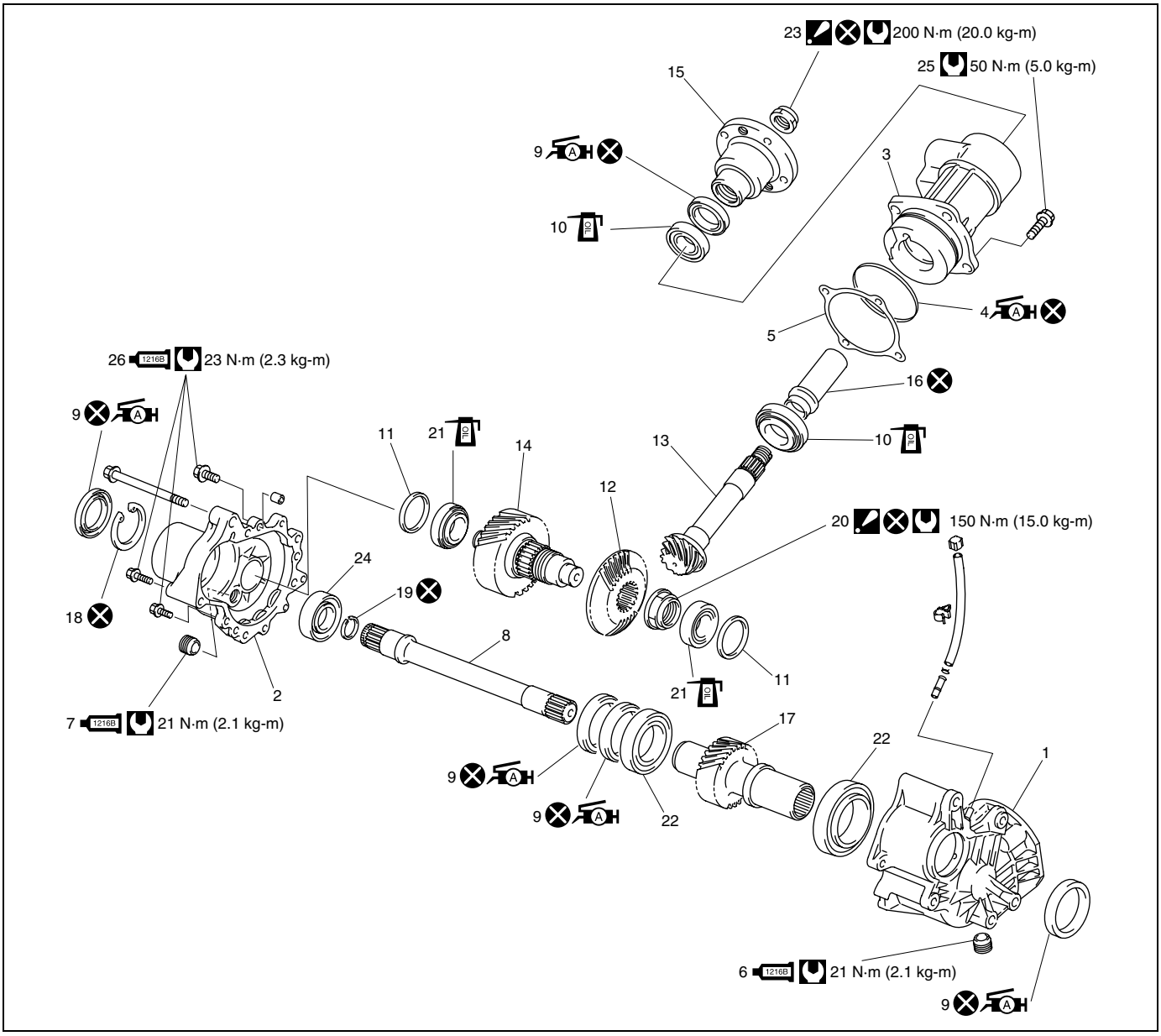

1. Transfer left case	11. Bevel gear shim	21. Driven gear bearing
2. Transfer right case	12. Bevel gear (Hypoid gear)	22. Reduction drive gear bearing
3. Transfer output retainer	13. Bevel pinion shaft (Hypoid gear)	23. Flange nut : After tightening nut so as rotation torque of bevel pinion shaft to be in specified value, caulk nut securely.
4. O-ring : Apply grease 99000-25010 to all around surface	14. Reduction driven gear	24. Intermediate right bearing
5. Bevel pinion shim	15. Flange	25. Transfer output retainer bolts
6. Transfer oil drain plug : Apply sealant 99000-31230 to all around thread part of drain plug	16. Pinion shaft spacer	26. Transfer case bolt
7. Transfer oil level/Filler plug : Apply sealant 99000-31230 to all around thread part of level plug	17. Reduction drive gear	Do not reuse.
8. Intermediate shaft	18. Snap ring	Tightening torque
9. Reduction drive gear oil seal : Apply SUZUKI SUPER GREASE A 99000-25010 to oil seal lip.	19. Circlip	Apply transfer oil.
10. Pinion shaft bearing	20. Bevel gear nut : After tightening nut to specified torque, caulk nut securely	

Transfer Disassembly and Assembly

Disassembly

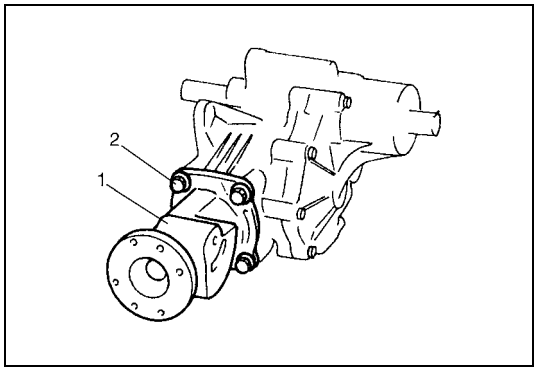

1) Remove retainer bolts (2) and remove transfer output retainer (1).

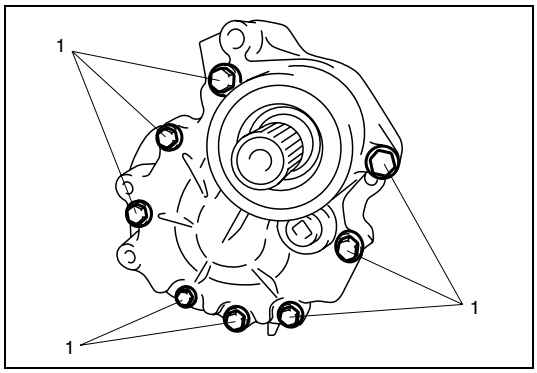

2) Remove transfer case bolts (1).
3) Separate right case with intermediate shaft from left case by tapping with plastic hammer.

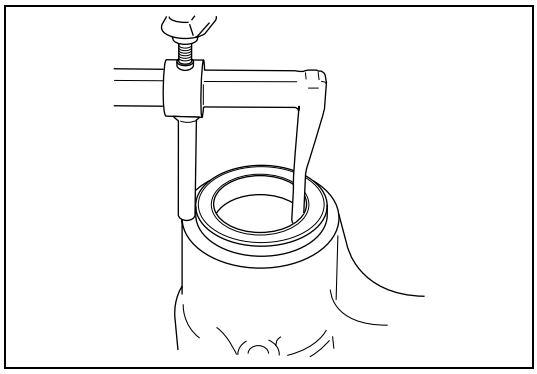

4) If reduction drive gear oil seal replacement is necessary, remove oil seal from left case using special tool.

Special tool
(A) : 09913-50121

5) If bevel gear shim adjustment is necessary, remove driven gear bearing outer races as follows.

NOTE:

If either or both the following part(s) is/are replaced, bevel gear shim adjustment is necessary in assembly.

- **Driven gear bearing**
- **Bevel gear nut**
- **Bevel gear**
- **Reduction driven gear**

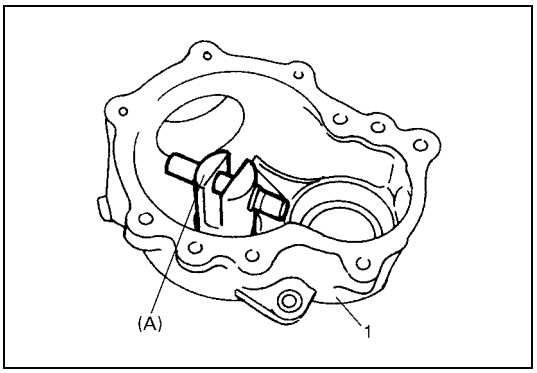

a) Remove driven gear bearing outer race from left case (1) using special tool.

Special tool
(A) : 09941-54911

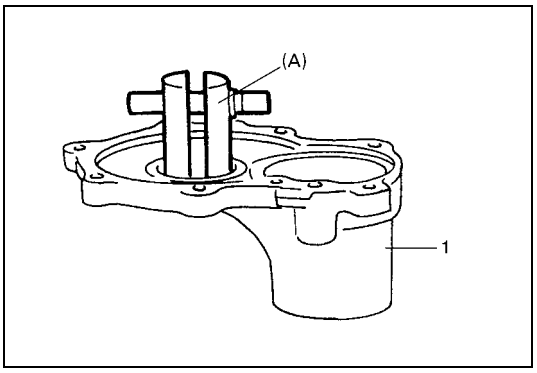

b) Remove driven gear bearing outer race from right case (1) using special tool.

Special tool
(A) : 09941-54911

Assembly

1) Install bevel gear shims and driven gear bearing outer races to right and left cases.

NOTE:

If either or both the following part(s) is/are replaced, adjust bevel gear shim referring to "Bevel Gear Shim Adjustment" in this section.

- **Driven gear bearing**
- **Bevel gear nut**
- **Bevel gear**
- **Reduction driven gear**

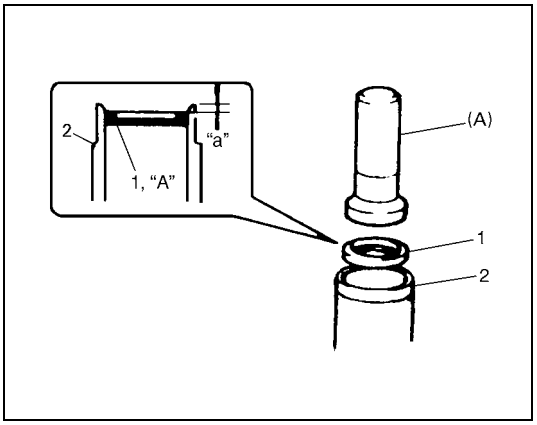

2) Install reduction drive gear oil seal (1) to left case (2) using special tool.

Special tool
(A) : 09913-75810

Transfer reduction drive gear oil seal installing depth
"a" : 1.5 – 2.0 mm (0.059 – 0.078 in.)

3) Fill grease to inside of oil seal about 3 g (0.11 oz), and apply grease to oil seal lip.

"A" : Grease 99000-25010

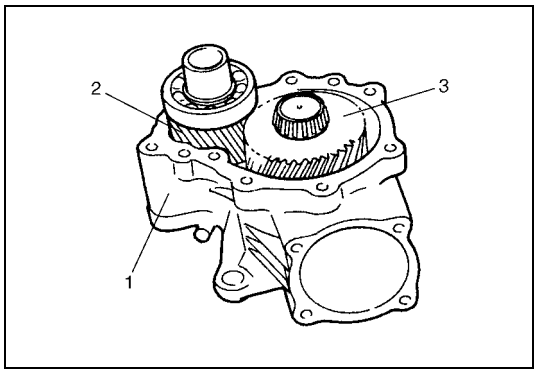

4) Install reduction drive gear (2) and reduction driven gear (3) to left case (1).

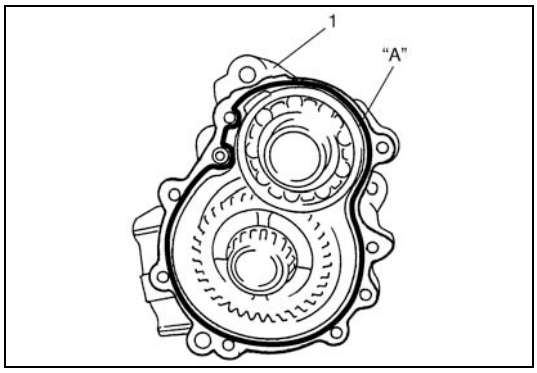

5) Clean mating surface of right case and left case (1), and apply sealant to left case (1) using a nozzle as shown in figure by such amount that its section is 1.5mm (0.059 in) in diameter.

"A" : Sealant 99000-31230

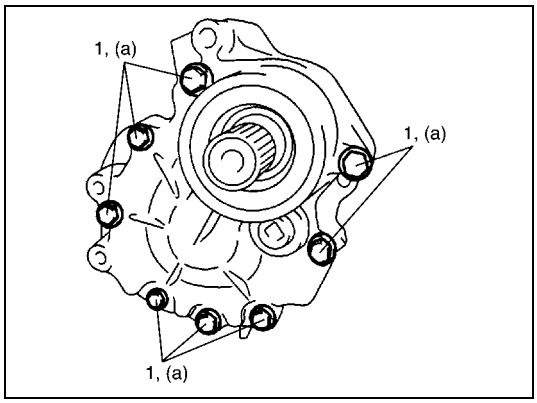

6) Tighten transfer case bolts (1) to specified torque.

Tightening torque
Transfer case bolts (a) : 23 N·m (2.3 kg-m, 17.0 lb-ft)

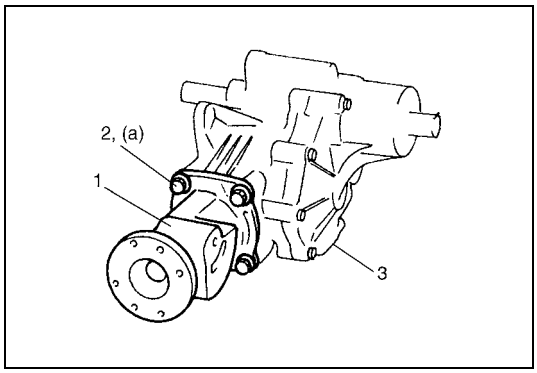

7) Install selected bevel pinion shim(s) to transfer assembly (3) according to "Transfer Output Retainer Adjustment" in this section.
8) Install transfer output retainer (1) to transfer case, and then tighten transfer output retainer bolts (2) to specified torque.

Tightening torque
Transfer output retainer bolts
(a) : 50 N·m (5.0 kg-m, 36.5 lb-ft)

9) Measure bevel gear back lash according to "Measurement" under "Bevel Gear Back Lash Measurement and Adjustment" in this section.
   If measured bevel gear back lash exceeds the specification, adjust bevel gear back lash according to "Adjustmentt" under "Bevel Gear Back Lash Measurement and Adjustment" in this section.

Transfer Inspection

- Check each bearing for smooth rotation, wear or discoloration.
  If found abnormal, replace.
- Check oil seal for leakage and its lip for excessive hardness.
  If either is found, replace.
- Check transfer case for cracks.
- Check bevel pinion and bevel gear for wear or cracks.
- Check pinion gear and pinon shaft for wear or damage.

Reduction Driven Gear Disassembly and Assembly

Disassembly

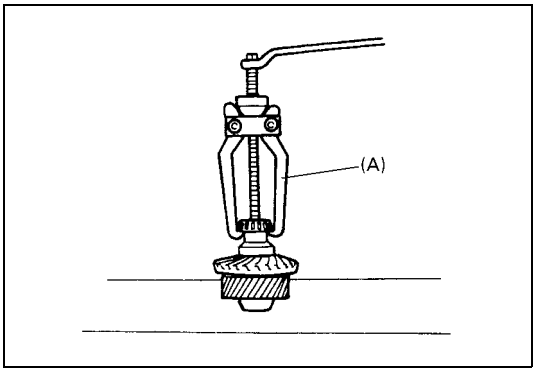

1) Drive out left side driven gear bearing using special tool.

Special tool
(A) : 09913-65135

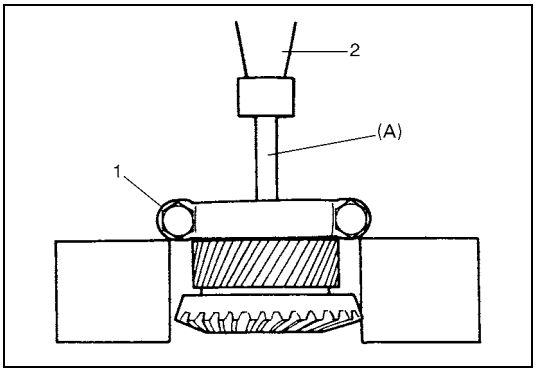

2) Drive out right side driven gear bearing using bearing puller (1), press (2) and special tool.

Special tool
(A) : 09925-58210

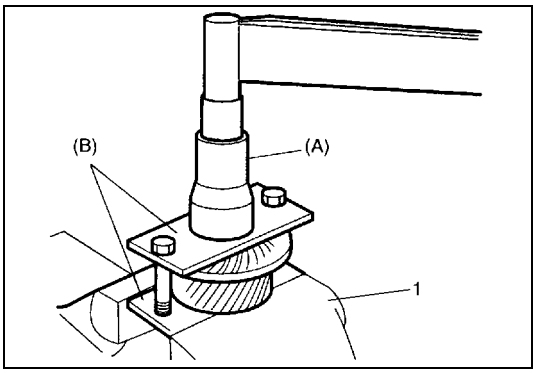

3) Uncaulk bevel gear nut, and remove bevel gear nut while holding bevel gear with special tool and vise (1).

Special tool
(A): 09941-58020
(B): 09924-57610

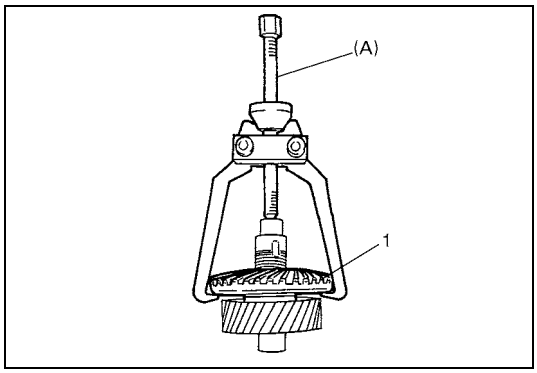

4) Drive out bevel gear (1) using special tool.

Special tool
(A): 09913-65135

Assembly

CAUTION:
- **Bevel gear and pinion must be replaced as a set when either replacement becomes necessary.**
- **When replacing taper roller bearing, replace as inner race & outer race assembly.**

1) Drive in bevel gear to reduction driven gear.

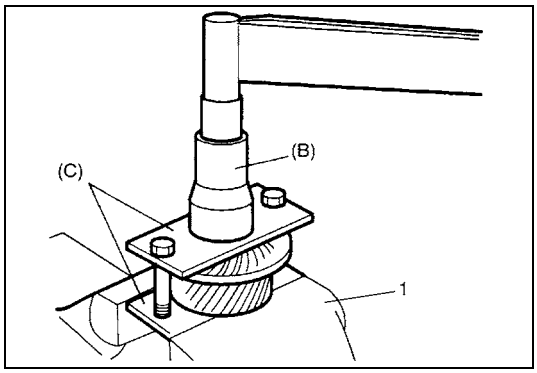

2) Tighten bevel gear nut to specified torque while holding bevel gear with special tool and vise (1), and then caulk nut.

Tightening torque
Transfer bevel gear nut
: 150 N·m (15.0 kg-m, 108.5 lb.-ft.)

Special tool
(B): 09941-58020
(C): 09924-57610

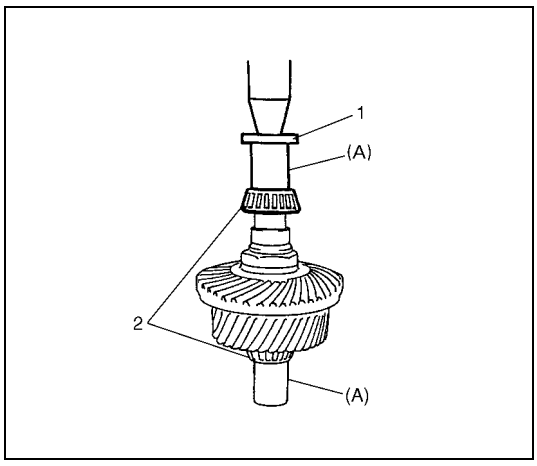

3) Press-fit driven gear bearings (2) (right and left) to driven gear using special tools.

Special tool
(A): 09945-16070

NOTE:

Support shaft with special tool as illustrated in the figure so that retainer of bearing cone will be free from compression.

1. Plate

Reduction Drive Gear Disassembly and Assembly

Disassembly

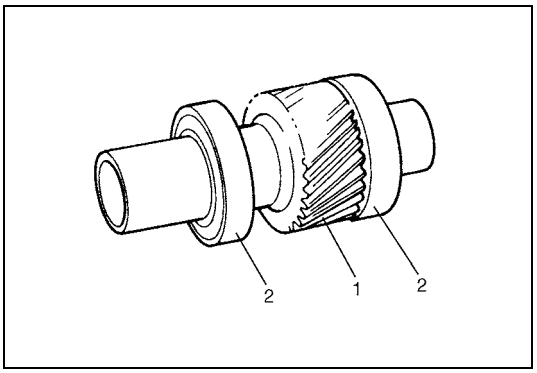

1) Remove reduction drive gear (1) from left case tapping with plastic hammer.

2. Bearing

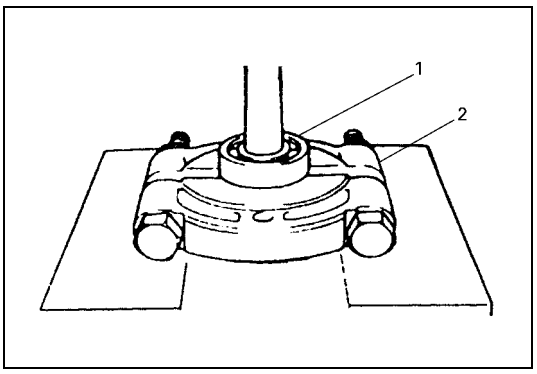

2) Remove drive gear bearings (1) (right and left) from reduction drive gear using bearing puller (2).

Assembly

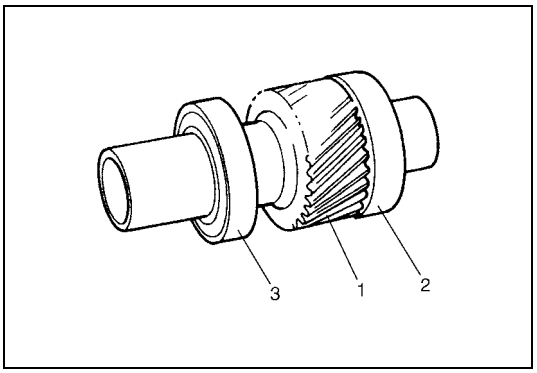

1) Press-fit drive gear bearings (right (2) and left (3)) to reduction drive gear (1).
2) Apply gear oil to ball part of bearing.

Intermediate Shaft Disassembly and Assembly

Disassembly

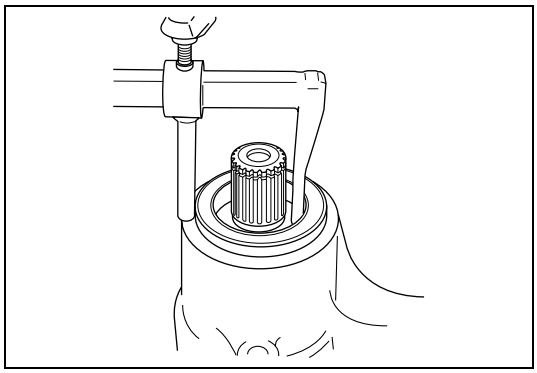

1) Remove reduction drive oil seal (1) using special tool.

Special tool
(A) : 09913-50121

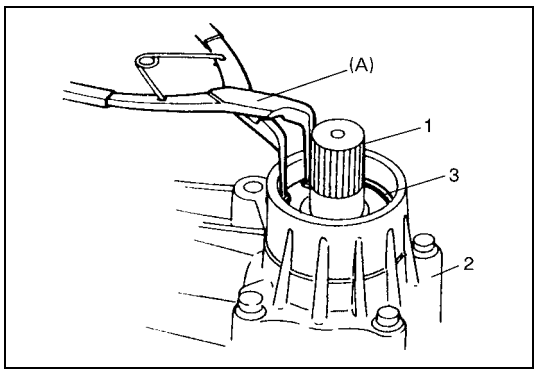

2) Remove snap ring (3) from right case (2) using special tool, and drive out intermediate shaft (1).

Special tool
(A) : 09952-76011

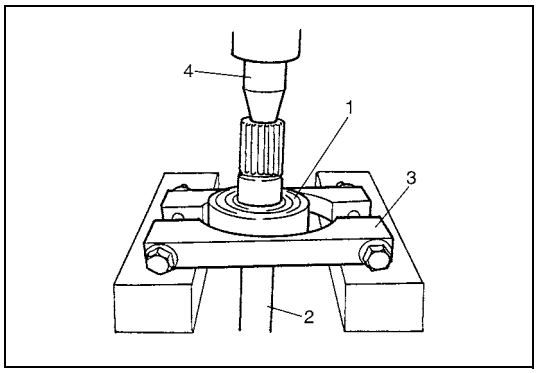

3) Drive out intermediate right bearing (1) from intermediate shaft (2) using bearing puller (3) and press (4).

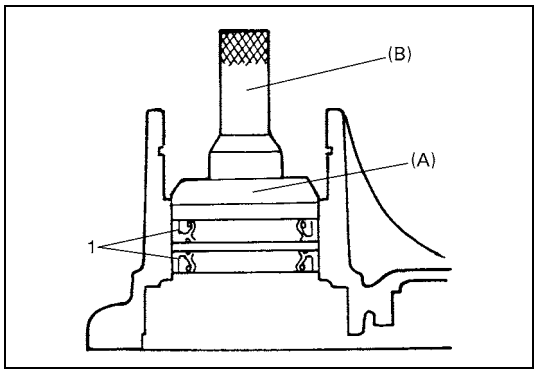

4) Remove intermediate center oil seals (1) using press and special tools.

Special tool
(A) : 09924-84510-005
(B) : 09913-75821

Assembly

1) Press-fit intermediate right bearing to intermediate shaft.

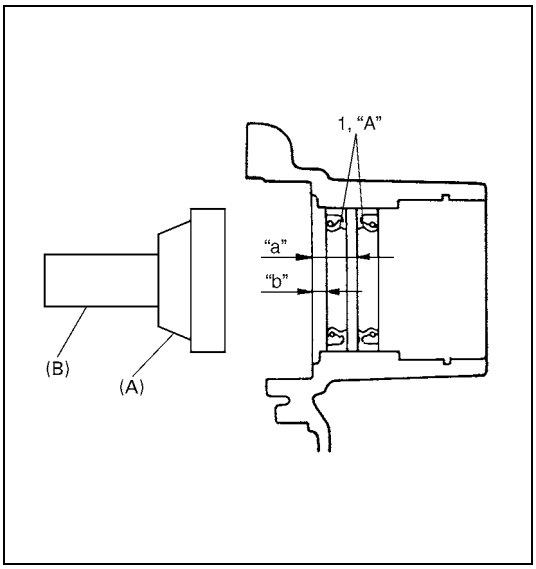

2) Install intermediate center oil seals (1) to case using special tool, and apply grease to oil seal lip.

CAUTION:
Use care the installation direction and depth of oil seals for correct installation.

Special tool
(A) : 09924-84510-005
(B) : 09913-75821

"A" : Grease 99000-25010

Transfer intermediate center oil seals installing depth
"a" : 16.0 – 16.5 mm (0.630 – 0.650 in.)
"b" : 4.0 – 4.5 mm (0.157 – 0.177 in.)

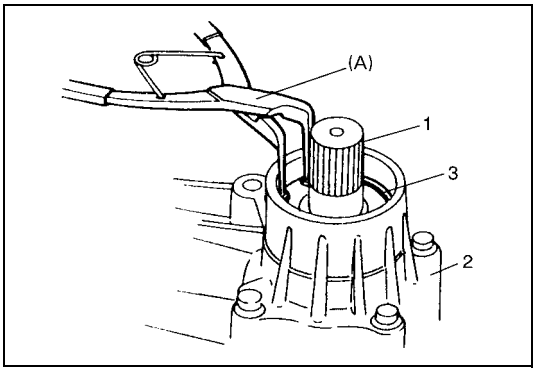

3) Install intermediate shaft (1) to right case (2), and install snap ring (3).

Special tool
(A) : 09952-76011

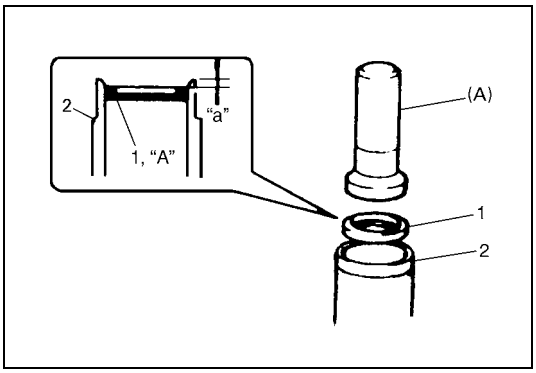

4) Install reduction drive gear oil seal (1) to right case (2).

Special tool
(A) : 09913-75810

Transfer right case oil seal installing depth
"a" : 1.0 – 1.5 mm (0.039 – 0.059 in.)

5) Fill grease to inside of oil seal about 3 g (0.11 oz), and apply grease to oil seal lip.

"A" : Grease 99000-25010

Transfer Output Retainer Disassembly and Assembly

Disassembly

1) Uncaulk flange nut.

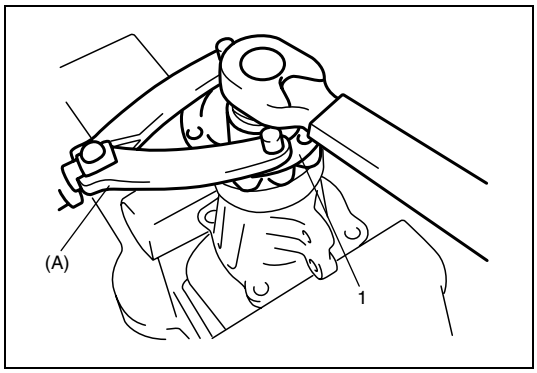

2) Remove flange nut while holding flange (1) with special tool.

Special tool
(A) : 09930-40113

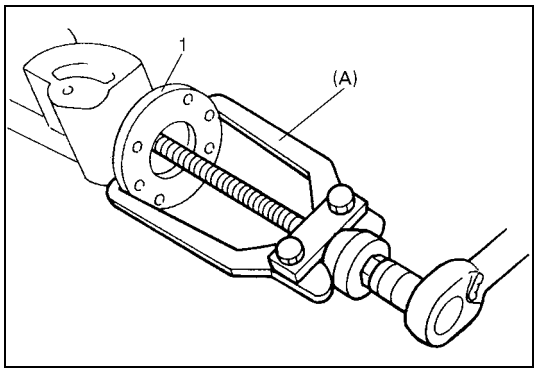

3) Remove flange (1) using special tool.

Special tool
(A) : 09913-65135

4) Drive out bevel pinion shaft from transfer output retainer tapping with plastic hammer.
5) Drive out pinion spacer from bevel pinion shaft.

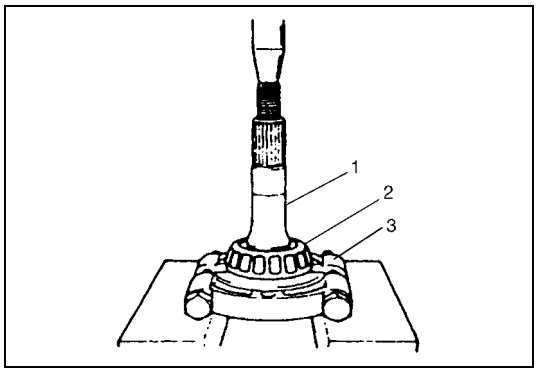

6) Drive out pinion shaft bearing (2) from bevel pinion shaft (1) using press.

3. Bearing puller

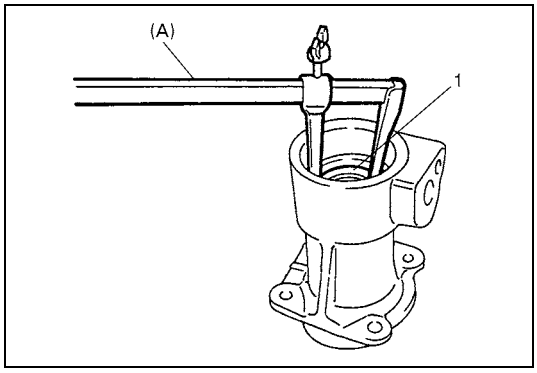

7) Remove pinion shaft oil seal (1) using special tool.

Special tool
(A) : 09913-50121

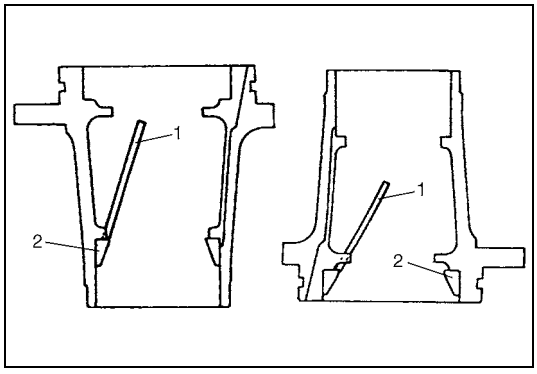

8) Drive out pinion shaft bearing outer races (2) (front and rear) using brass bar (1).

Assembly

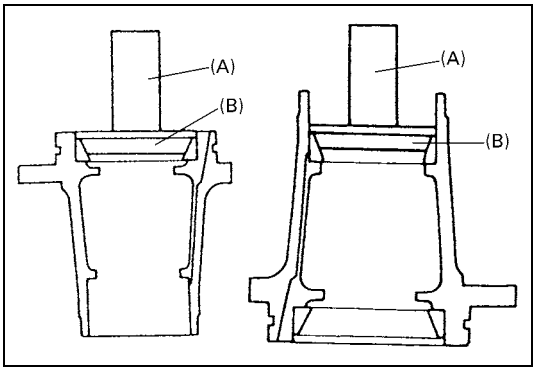

1) Press-fit pinion shaft bearing outer races (front and rear) using special tools.

Special tool
(A) : 09913-75821
(B) : 09924-84510-005

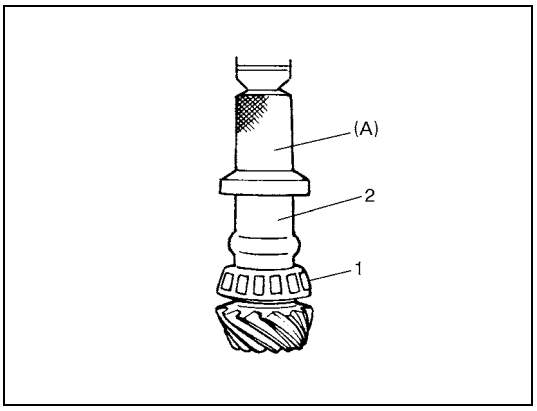

2) Press-fit pinion shaft bearing (front side) (1) using special tool, press and pinion shaft spacer (2).

Special tool
(A) : 09913-75810

NOTE:

Use pinion shaft spacer "Which was assembled to transfer" in this procedure, and install new pinion shaft spacer at next step.

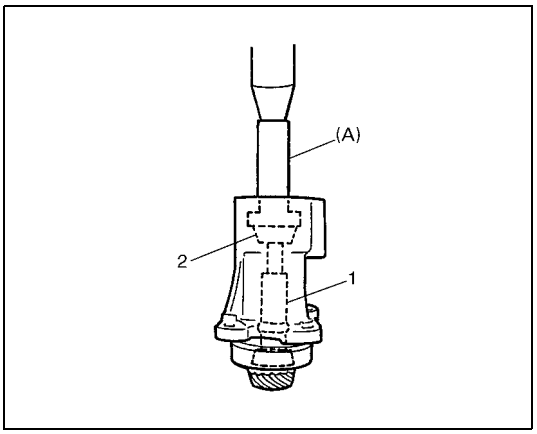

3) Install bevel pinion shaft with new pinion shaft spacer (1) to transfer output retainer.
4) Press-fit pinion shaft bearing (rear side) (2) using special tool (and press).

Special tool
(A) : 09913-75810

CAUTION:
Press-fit bearing to such an extent that spacer is not compressed.

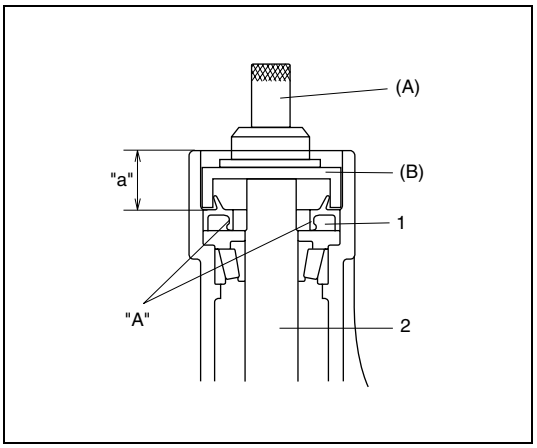

5) Drive in oil seal (1) using special tools and apply grease to oil seal lip.

Special tool
(A) : 09913-70123
(B) : 09924-07720

"A" : Grease 99000-25010

Transfer bevel pinion shaft oil seal installing depth
"a" : 27.0 – 27.5 mm (1.063 – 1.083 in.)

2. Bevel pinion shaft

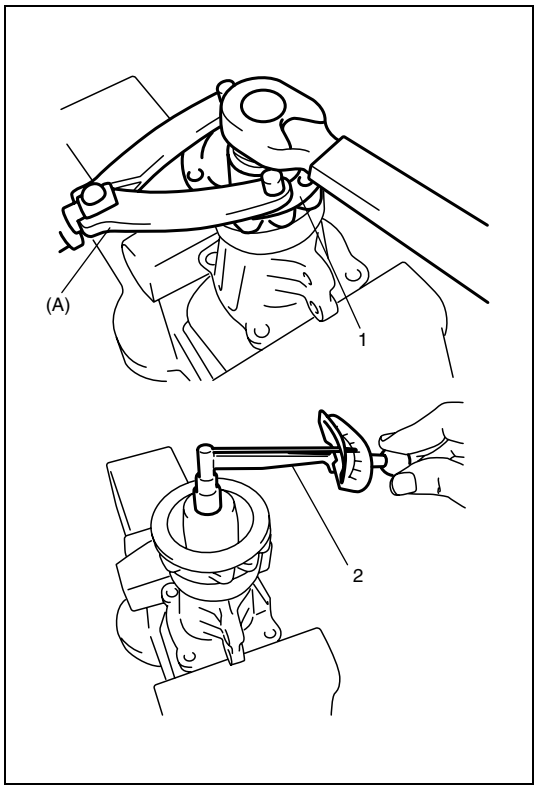

6) Install flange (1) and tighten flange nut gradually so as rotational torque of bevel pinion shaft to be in specified value.

NOTE:

- **Before taking measurement of rotational torque, rotate pinion shaft over ten rounds in advance.**
- **For measuring bevel pinion shaft rotational torque, turning bevel pinion at about 50 rpm is required.**
- **If rotational torque of bevel pinion shaft is out of specification given below, replace pinion shaft spacer and tighten flange nut.**

Special tool
(A) : 09930-40113

Flange nut
: 100 – 300 N·m (10.0 – 30.0 kg-m, 72.5 – 217.0 lb-ft)

Rotation torque for bevel pinion shaft
: 0.5 – 1.3 N·m (5.0 – 13.0 kg-cm, 0.30 – 0.90 lb-ft)

2. Torque wrench

7) Caulk flange nut.

Bevel Gear Shim Adjustment

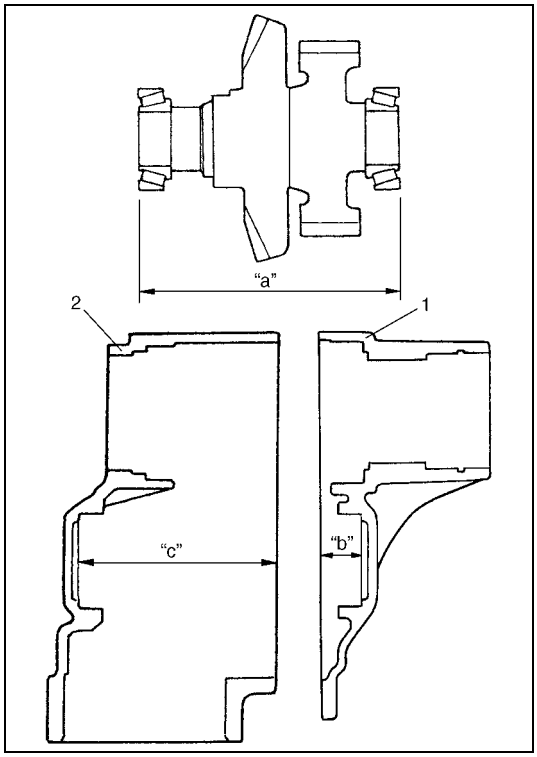

1) Install driven gear bearing outer races, and measure distance "a" between end faces of driven gear bearing outer races.
2) Measure depth "b" and "c" from mating face of right (left) case (to match with left (right) case) to face processed for installation of driven gear bearing.
3) Calculate shim thickness to be inserted.
   Shim thickness = {"b" + "c" – "a" + 0.1 mm (0.004 in.)}/2
4) Select shim closest to calculated value.

Available shims thickness
: 0.60, 0.65, 0.70, 0.75, 0.8, 0.85, 0.90, 0.95, 1.00 and 1.05 mm (0.024, 0.026, 0.028, 0.030, 0.031, 0.033, 0.035, 0.037, 0.040, and 0.041 in.)

1. Right case
2. Left case

Transfer Output Retainer Adjustment

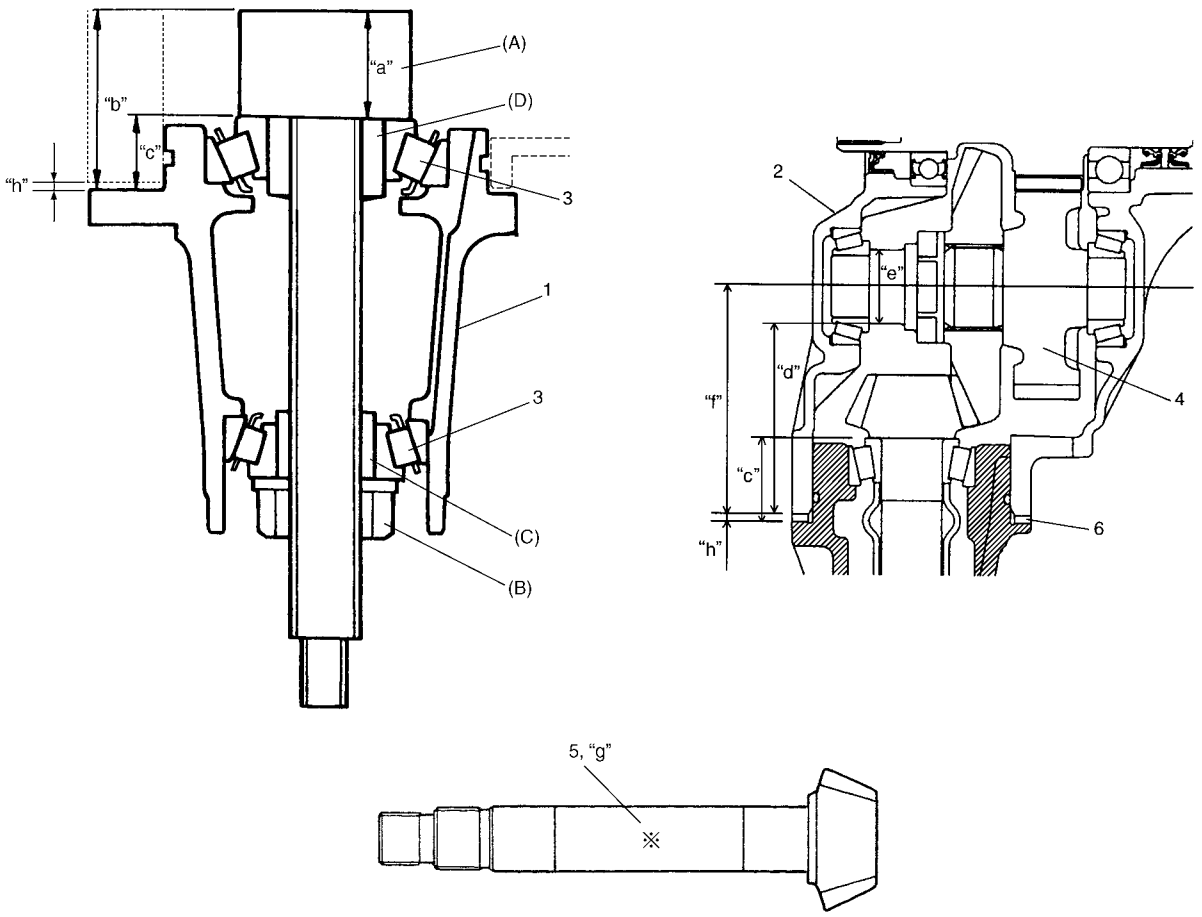

"a": Pinion dummy (special tool) height 40 mm (1.575 in.)	1. Transfer output retainer
"b": Height from retainer installation face to pinion dummy	2. Left case
"c": Distance from retainer installation face to end face of bearing race ("b" – "a")	3. Pinion shaft bearing
"d": Distance from end face of left case to cylinder section of reduction driven gear	4. Reduction driven gear
"e": Outer diameter of cylinder section of reduction driven gear	5. Bevel pinion shaft
"f": Distance from end face of left case to center shaft of reduction driven gear ("d" + "e"/2)	
"g": Dimension marked on bevel pinion shaft (Marked in shaft in mm)	
"h": Shim size for mounting distance adjustment ("g" + "c" – "f")	

Special tool

(A) : 09922-76140

(B) : 09922-76150

(C) : 09922-76340

(D) : 09922-76430

To engage bevel pinion and gear correctly, it is prerequired to install bevel pinion to transfer output retainer properly by using adjusting shim (bevel pinion shim) as described as follows.
Shown in above-mentioned components are relative positions of bevel pinion, gear and transfer output retainer.

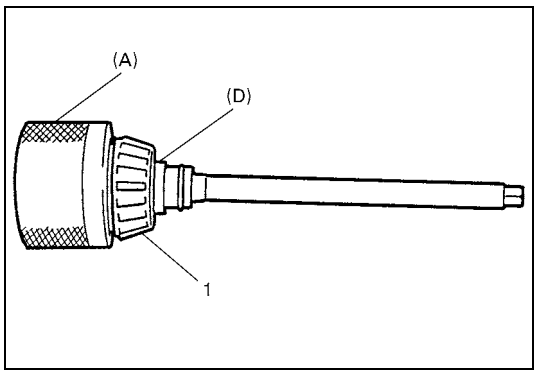

1) Install pinion shaft bearing (1) (front side) to special tools (bevel pinion dummy).

Special tool
(A) : 09922-76140
(D) : 09922-76430

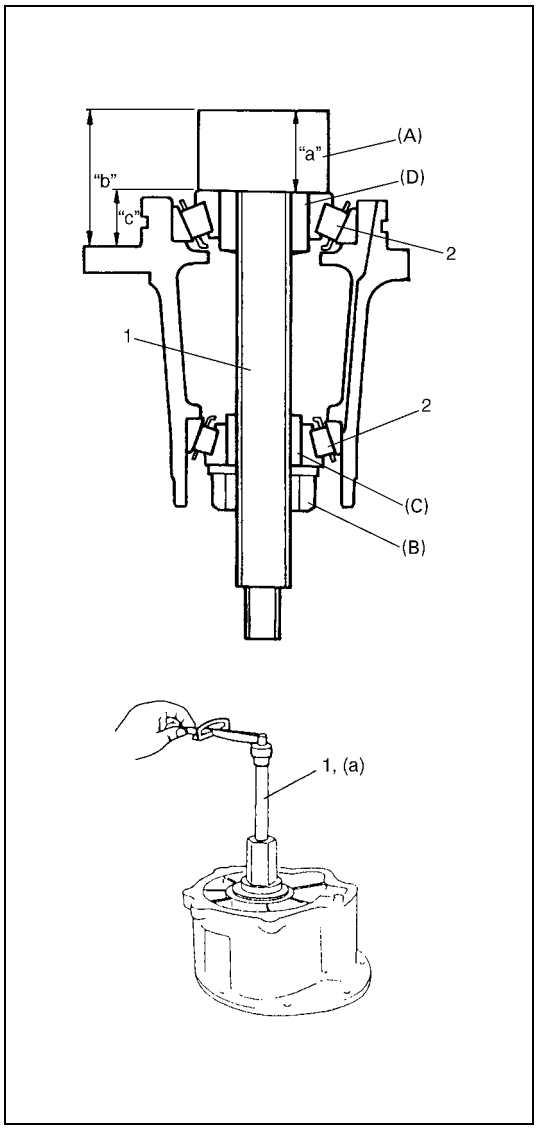

2) Install bevel pinion dummy (1), pinion shaft bearing (2) (rear side) and special tool (A) by using special tool (B) to transfer output retainer.

Special tool
(A) : 09922-76140
(B) : 09922-76150
(C) : 09922-76340
(D) : 09922-76430

NOTE:

This installation requires no spacer or oil seal.

3) Tighten bevel pinion nut (special tool) so that specified bearing preload is obtained.

NOTE:

Before taking measurement, check for rotation by hand more than 15 revolutions.

Pinion shaft bearing preload
(a) : 0.5 – 1.3 N·m (5.0 – 13.0 kg-cm, 4.4 – 11.2 lb-ft)

4) Measure height "b" in figure using vernier caliper.
Calculate "c" using measured value.

Distance "c"	=	Height "b"	–	Height "a" : 40 mm (1.575 in.)

"a": Pinion dummy height
"b": Height from retainer installation face to pinion dummy
"c": Distance from retainer installation face to end face of bearing race

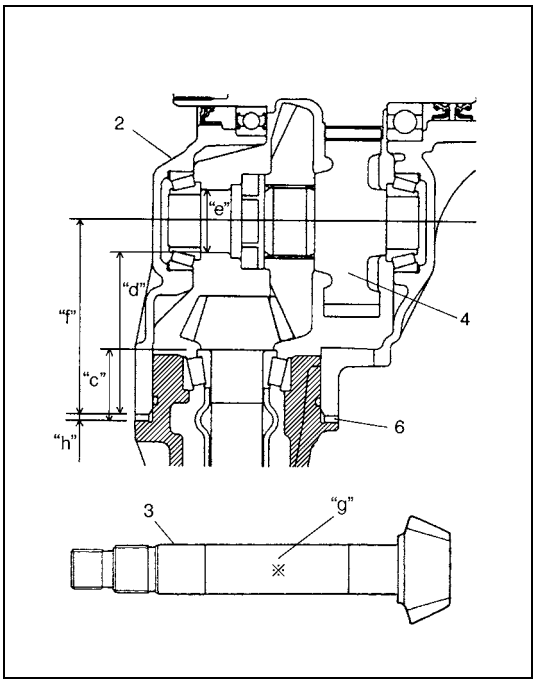

5) Install reduction driven gear (1) to left case (2) and right case and then measure distance “d” and “e” as indicated in figure. Calculate “f” using measured value.

Distance “f”	=	Distance “d”	+	“e”/2

6) Obtain adjusting shim thickness using calculated value in the following equation.

Necessary shim thickness “h”	=	Dimension “g”	+	Distance “c”	–	Distance “f”

“f”:	Distance from end face of left case to center shaft of reduction driven gear
“d”:	Distance from end face of left case to cylinder section of reduction driven gear
“g”:	Dimension marked on bevel pinion shaft
3.	Bevel pinion shaft

7) Select adjusting shim closest to calculated value from among the following available sizes.

Available shims thickness
: 0.30, 2.00, 2.03, 2.06, 2.09, 2.12, 2.15, 2.18, 2.21, 2.24 and 2.27 mm (0.012, 0.079, 0.080, 0.081, 0.082, 0.083, 0.085, 0.086, 0.087, 0.088 and 0.089 in.)

Bevel Gear Back Lash Measurement and Adjustment

Measurement

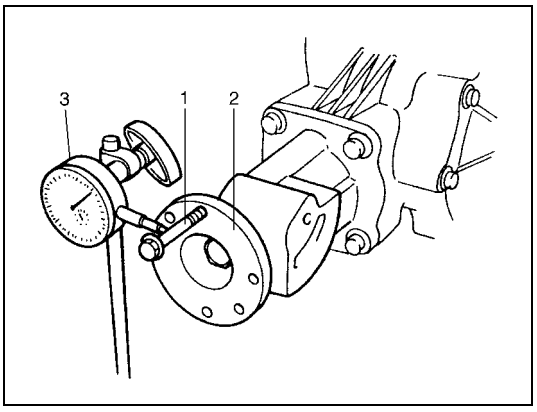

Install bolt to bolt hole of flange (2), set dial gauge (3) measuring tip at right angles to bolt (1) as shown in figure.
Take measurement backlash of pinion and bevel gear.

NOTE:

If backlash exceeds specification given below, replace bevel pinion shim (between transfer case and transfer output retainer) and measure backlash again.

Transfer pinion & bevel gear backlash
: 0.1 – 0.2 mm (0.0039 – 0.0078 in.)

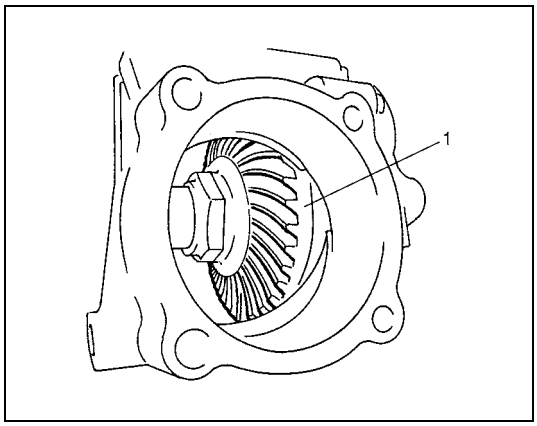

Adjustment

Check gear tooth contact as follows.

1) After cleaning tooth surface of bevel gear (1), paint them with gear marking compound evenly by using brush or sponge etc.

NOTE:

When applying red lead paste to teeth, be sure to paint tooth surfaces uniformly. The paste must not be too dry or too fluid.

2) Turn gear to bring its painted part in mesh with bevel pinion and turn it back and forth by hand to repeat their contact.
3) Bring painted part up and check contact pattern referring to "Bevel gear tooth contact table" in this section.
   If contact pattern is not normal, readjust or replace as necessary according to instruction in table.

NOTE:

- **Be careful not to turn bevel gear more than one full revolution, for it will hinder accurate check.**
- **If bevel gear back lash and bevel pinion shims are adjusted properly, correct tooth contact should be provided.**
  If correct tooth contact is not provided even when they are adjusted properly, however, there may be an abnormal condition in worn tooth, transfer case or retainer. Check each component and replace as necessary.

Bevel gear tooth contact table

TOOTH CONTACT PATTERN	DIAGNOSIS AND REMEDY
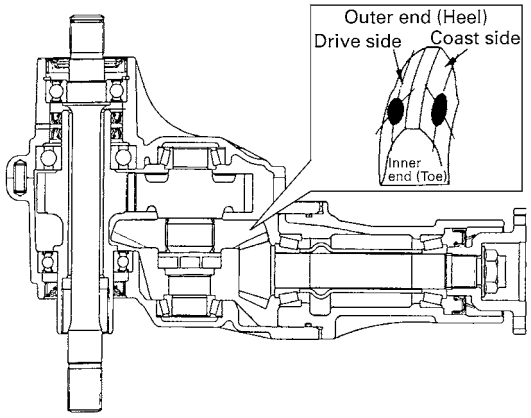	NORMAL
	HIGH CONTACT Pinion is positioned too fat from the center of drive bevel gear. 1) Decrease thickness of bevel pinion shim and position pinion closer to gear center. 2) Adjust drive bevel gear backlash to specification referring to “Bevel Gear Back Lash Measurement and Adjustment” in this section. 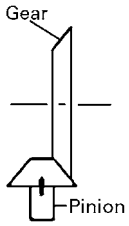
	LOW CONTACT Pinion is positioned too close to the center of drive bevel gear. 1) Increase thickness of bevel pinion shim and position pinion farther from gear center. 2) Adjust drive bevel gear backlash to specification referring to “Bevel Gear Back Lash Measurement and Adjustment” in this section. 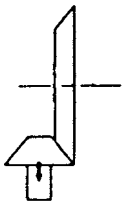
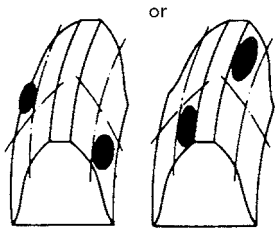	These contact patterns indicate that the “offset” of reduction driven gear is too much or too little. The remedy is to change the division of the bevel gear shim(s).

TOOTH CONTACT PATTERN	DIAGNOSIS AND REMEDY
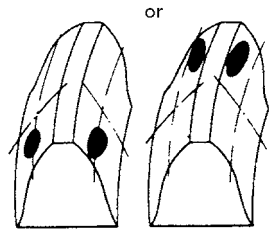	These contact patterns, located on toe or heel on both drive and coast sides, mean that 1) both pinion and gear are defective, 2) retainer is not true, or 3) gear is not properly seated on transfer case. The remedy is to replace the defective member.
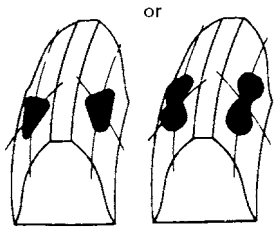	Irregular patterns: If the pattern is not oval, it means that bevel gear is defective. High or low spots on tooth surfaces or on the seat of bevel gear are the cause of irregular patterns appearing on some teeth. The remedy is to replace the pinion and gear set and, if the seat is defective, so is transfer case.

Tightening Torque Specification

Fastening part	Tightening torque		
	N•m	kg-m	lb-ft
Transfer oil level/filler and drain plugs	21	2.1	15.5
Flange nut	100-300	10.0-30.0	72.5-217.0
Transfer case bolts	23	2.3	17.0
Transfer output retainer bolts	50	5.0	36.5
Transfer mounting bolts	50	5.0	36.5
Transfer rear mounting bracket bolts	55	5.5	40.0
Transfer rear mounting bracket nuts	55	5.5	40.0
Transfer mounting bolt	55	5.5	40.0
Transfer rear mounting bracket No.2 bolts	55	5.5	40.0
Transfer to engine stiffener No.1 bolts	50	5.0	36.5
Transfer to engine stiffener No.2 bolts	23	2.3	17.0
Transfer bevel gear nut	150	15.0	108.5
Transfer to transaxle stiffener bolts	50	5.0	36.5

Required Service Material

Material	Recommended SUZUKI products (Part Number)	Use
Lithium grease	SUZUKI SUPER GREASE A (99000-25010)	• Oil seal lips
Sealant	SUZUKI BOND NO. 1216B (99000-31230)	• Oil drain plug • Oil level plug • Mating surface of transfer case

Special Tool

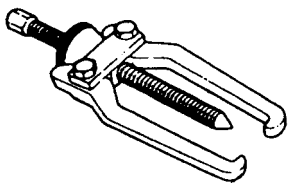 09913-65135 Bearing puller	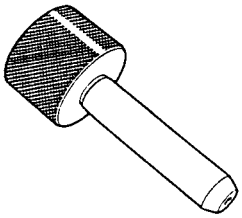 09925-58210 Oil seal installer	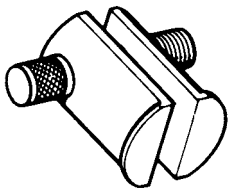 09941-54911 Bearing outer race remover	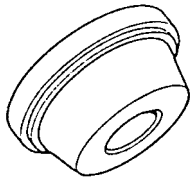 09924-84510-005 Bearing installer attachment
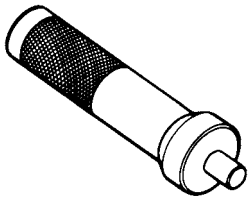 09913-75821 Bearing installer attachment	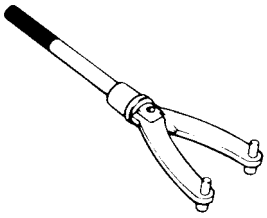 09930-40113 Rotor holder	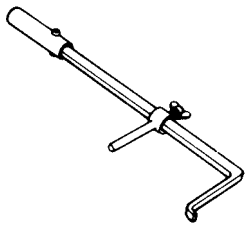 09913-50121 Oil seal remover	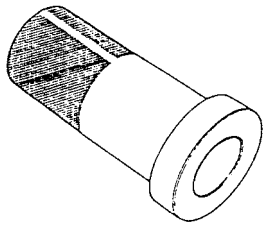 09913-75810 Bearing installer
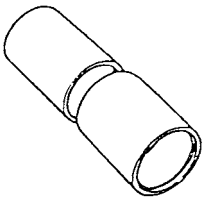 09945-16070 Retainer ring installer set	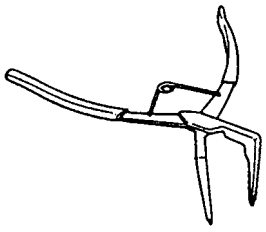 09952-76011 Snap ring pliers (closing type)	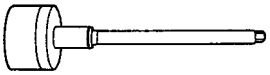 09922-76140 Bevel pinion shaft	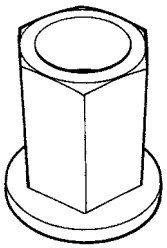 09922-76150 Bevel pinion nut
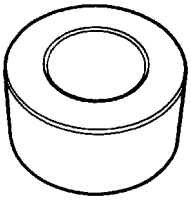 09922-76340 Rear collar	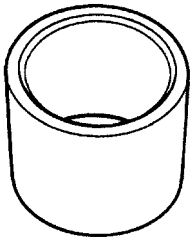 09922-76430 Front collar	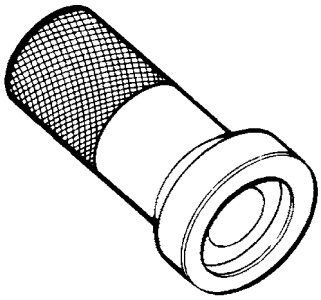 09913-70123 Bearing installer	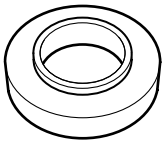 09924-07720 Synchronizer hub installer

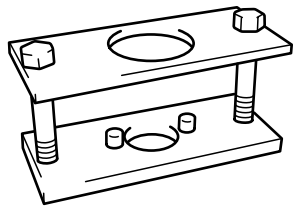	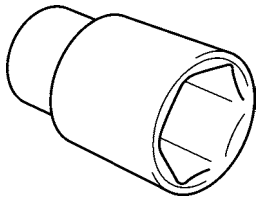
09924-57610 Gear holder	09941-58020 Socket wrench (40 mm)

SECTION 7F

REAR DIFFERENTIAL

CONTENTS

General Description 7F-2
Rear Differential Construction 7F-2
Diagnosis 7F-3
Rear Differential Symptom Diagnosis 7F-3
On-Vehicle Service 7F-4
Rear Differential Gear Oil Change 7F-4
Unit Repair Overhaul 7F-5
Rear Differential Components 7F-5
Rear Differential Dismounting and Remounting 7F-6
Rear Differential Disassembly 7F-8
Rear Differential Inspection 7F-10
Rear Differential Adjustment and Assembly 7F-10
Drive bevel pinion bearing outer race 7F-11
Differential case assembly 7F-11
Differential carrier and drive bevel pinion 7F-13
Tightening Torque Specification 7F-20
Required Service Material 7F-20
Special Tool 7F-21

General Description

Rear Differential Construction

The rear differential assembly for 4WD model uses a hypoid bevel pinion and gear.
The differential assembly is decisive in that the drive power is concentrated there. Therefore, use of genuine parts and specified torque is compulsory. Further, because of sliding tooth meshing with high pressure between bevel pinion and gear, it is mandatory to lubricate them by hypoid gear oil.
The hypoid gears have an advantage of preventing gear noise, at the same time, they require accurate adjustment of tooth contract and backlash.

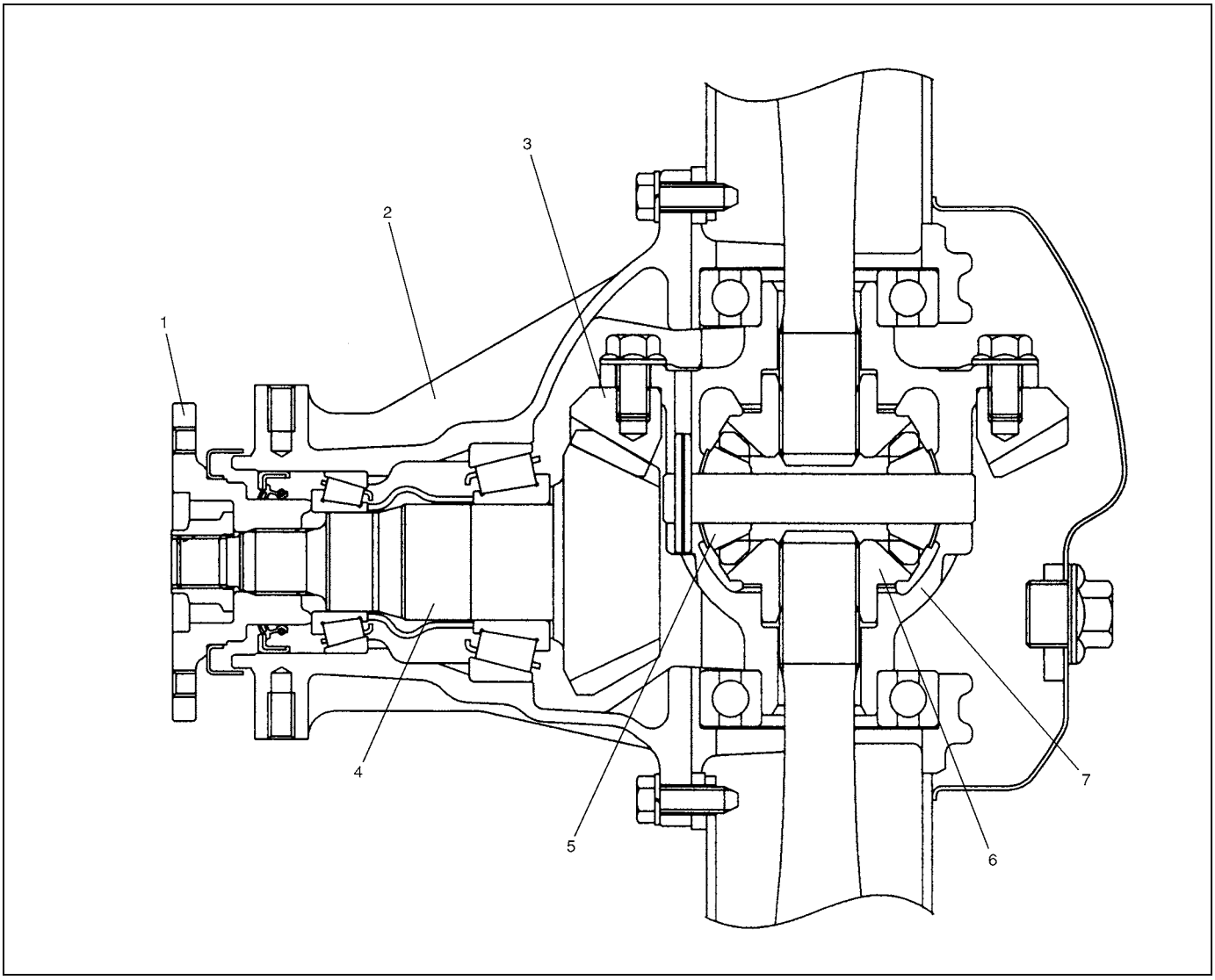

1. Companion flange	5. Differential pinion
2. Differential carrier	6. Differential side gear
3. Drive bevel gear (hypoid gear)	7. Differential case
4. Drive bevel pinion (hypoid gear)	

Diagnosis

Rear Differential Symptom Diagnosis

Condition	Possible Cause	Correction
Gear noise	Deteriorated or water mixed lubricant	Repair and replenish.
	Inadequate or insufficient lubricant	Repair and replenish.
	Maladjusted backlash between bevel pinion and gear	Adjust and prescribed.
	Improper tooth contact in the mesh between bevel pinion and gear	Adjust or replace.
	Loose bevel gear securing bolts	Replace or retighten.
	Damaged side gear(s) or side pinion(s)	Replace.
Bearing noise	(Constant noise) Deteriorated or water mixed lubricant	Repair or replenish.
	(Constant noise) Inadequate or insufficient lubricant	Repair or replenish.
	(Noise while coasting) Damaged bearing(s) of bevel pinion	Replace.
	(Noise while turning) Damaged differential side bearing(s)	Replace.
Oil leakage	Clogged breather plug	Clean.
	Worn or damaged oil seal	Replace.
	Excessive oil	Adjust oil level.

On-Vehicle Service

Rear Differential Gear Oil Change

1) Before oil change or inspection, be sure to stop engine and set vehicle horizontally.
2) Check oil level and existence of leakage. For checking oil level roughly, lower point of level hole can be assumed to be standard point of level. If leakage is found, correct its cause.

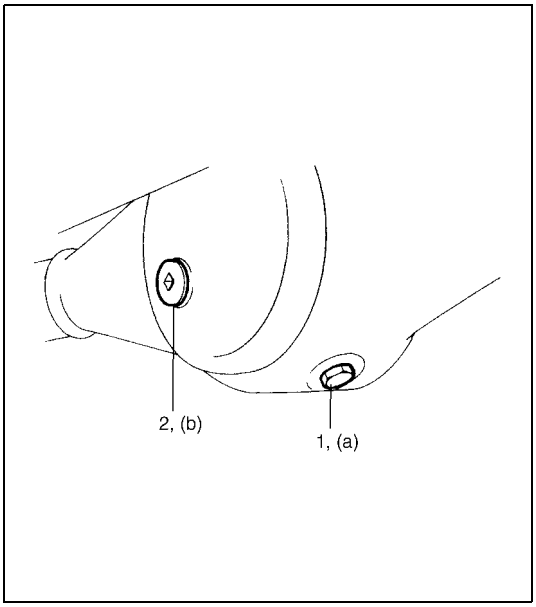

3) Remove level/filler plug (2) and drain plug (1), then drain differential oil.
4) Install new gasket to drain plug and tighten drain plug to specified torque.

Tightening torque
Rear differential oil drain plug
(a): 55 N·m (5.5 kg-m, 40.0 lb-ft)

5) Fill proper amount of new gear oil as specified below (roughly up to level hole).
6) Install new gasket to level/filler plug and tighten level/filler plug to specified torque.

Tightening torque
Rear differential oil level/filler plug
(b): 50 N·m (5.0 kg-m, 36.5 lb-ft)

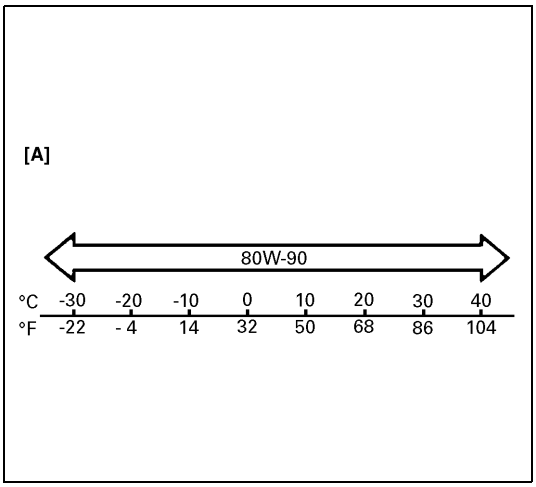

NOTE:

- **It is highly recommended to use SAE 80W-90 viscosity.**
- **Whenever vehicle is hoisted for any other service work than oil change, also be sure to check for oil leakage.**

Differential oil
Hypoid gear oil API GL-5
For oil viscosity, refer to the chart.

Differential oil capacity
1.0 liters (2.1/1.8 US/Imp. pt)

[A]: Viscosity chart SAE

Unit Repair Overhaul

Rear Differential Components

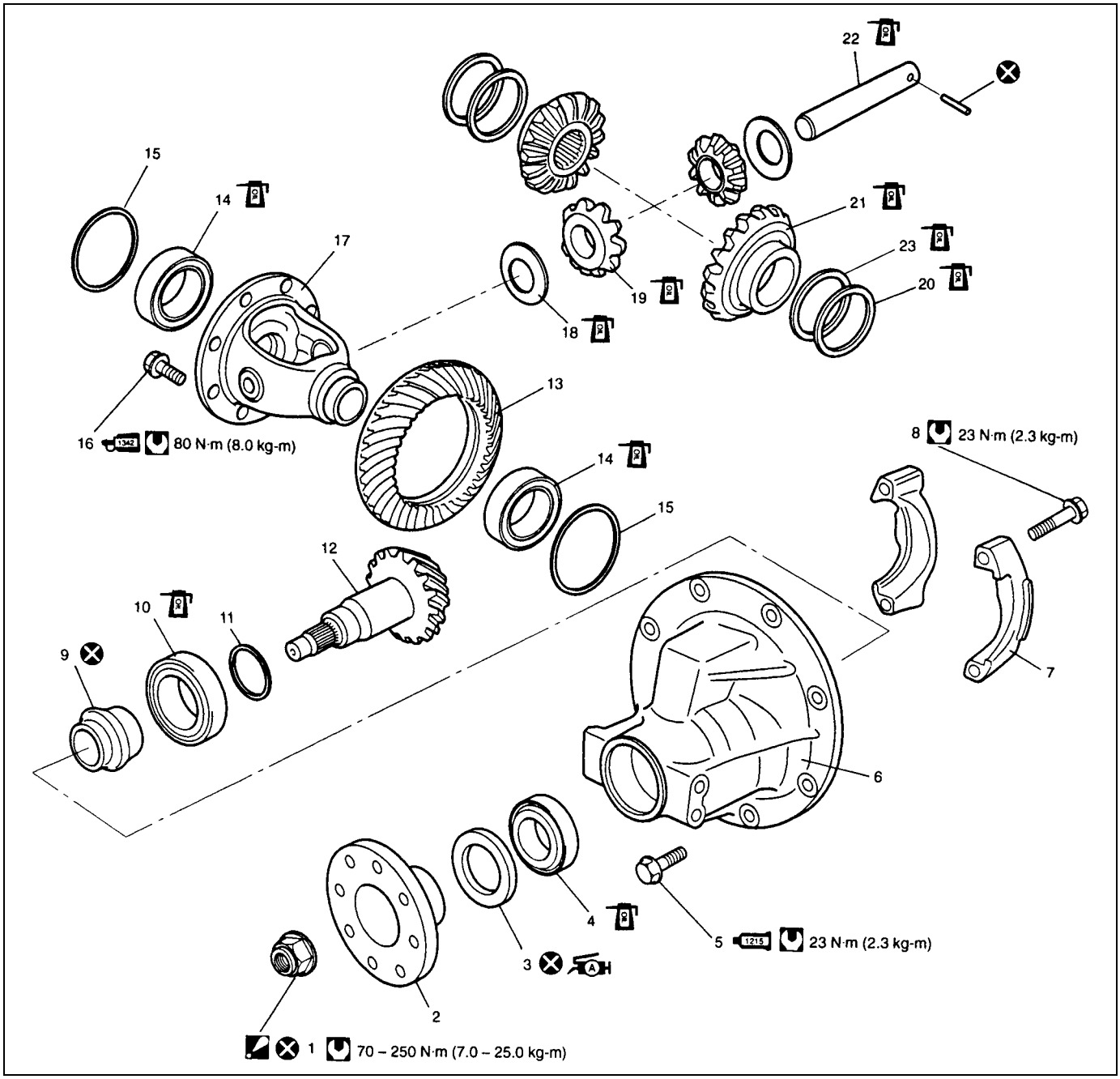

	1.	Drive bevel pinion nut : After tightening nut so as rotational torque of drive bevel pinion to be in specified torque, caulk nut securely.	10.	Drive bevel pinion rear taper roller bearing	19. Differential pinion
	2.	Companion flange	11.	Bevel pinion shim	20. Differential side washer
A H	3.	Oil seal : Apply grease 99000-25010 to oil seal lip.	12.	Drive bevel pinion (hypoid gear)	21. Differential side gear
	4.	Drive bevel pinion front taper roller bearing	13.	Drive bevel gear (hypoid gear)	22. Differential pinion shaft
1215	5.	Differential carrier bolt : Apply sealant 99000-31110 to thread part.	14.	Differential side bearing	23. Differential side spring washer
	6.	Differential carrier	15.	Shim	Do not reuse.
	7.	Differential side bearing cap	1322	16. Drive bevel gear bolt : Apply thread lock cement 99000-32110 to thread.	Tightening torque
	8.	Differential side bearing cap bolt	17.	Differential case	Apply differential oil.
	9.	Spacer	18.	Differential pinion washer	

Rear Differential Dismounting and Remounting

Dismounting

1) Hoist vehicle and remove wheels.

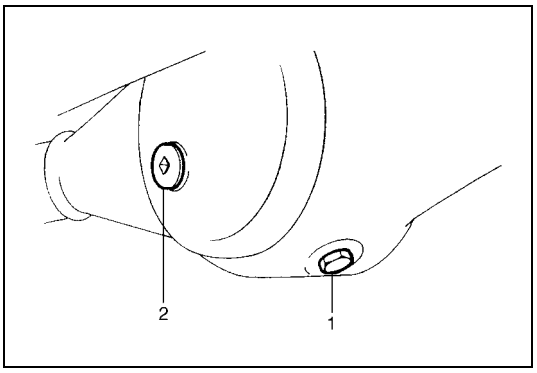

2) Drain oil from rear differential.

1.	Drain plug
2.	Level/filler plug

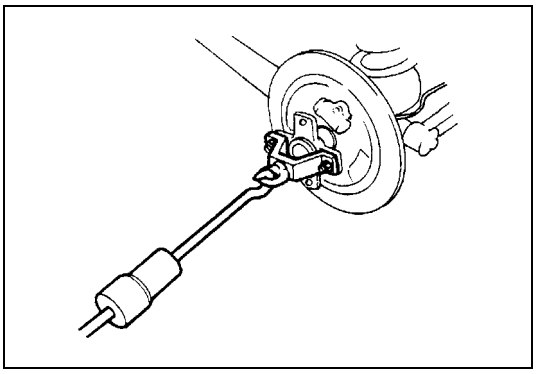

3) Remove brake drum and disconnect parking brake cable from brake back plate referring to “Parking Brake Lever Removal and Installation” in Section 5C.
4) Remove axle shafts referring to “Rear Axle Shaft and Wheel Bearing Removal and Installation (for 4WD Model)” in Section 3E.

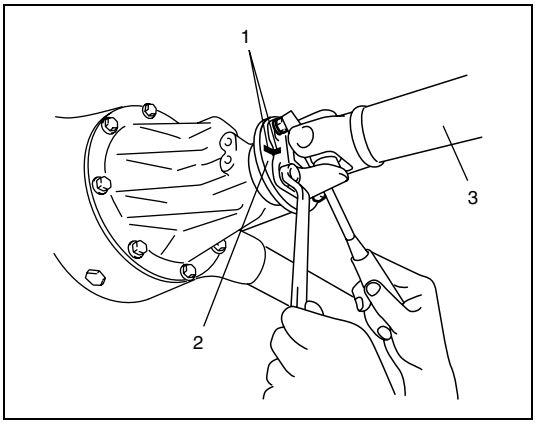

5) Before removing propeller shaft, give match marks (1) on companion flange (2) and propeller shaft (3) as shown.

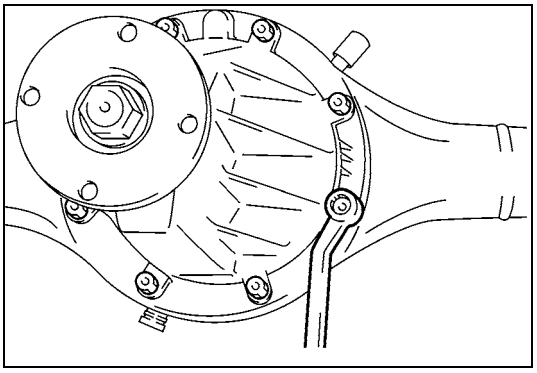

6) Remove differential carrier bolts and differential assembly.

Remounting

Reverse removal procedure for installation, noting the following.

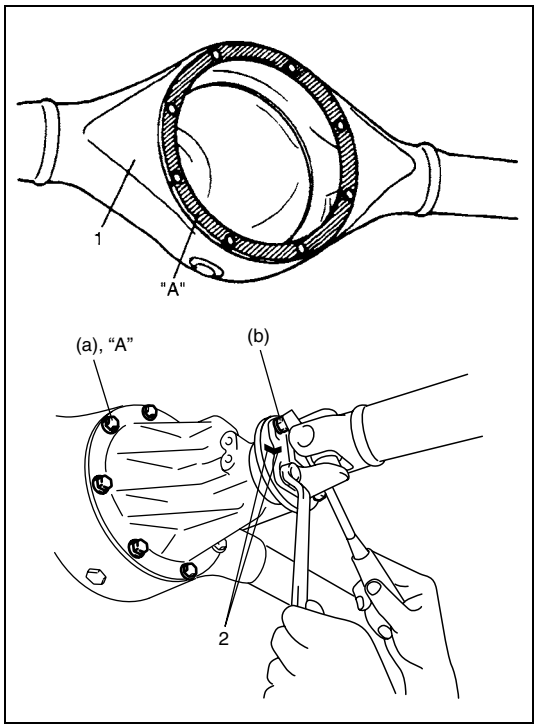

- Clean mating surfaces of axle housing (1) and differential carrier and apply sealant to housing side.

"A": Sealant 99000-31110

- Apply sealant to carrier bolts and tighten carrier bolts to specified torque.

"A": Sealant 99000-31110

Tightening torque
Differential carrier bolts
(a): 23 N·m (2.3 kg-m, 17.0 lb-ft)

- Install propeller shaft to companion flange aligning match marks (2) and tighten propeller shaft bolts to specified torque.

Tightening torque
Propeller shaft bolts
(b): 23 N·m (2.3 kg-m, 17.0 lb-ft)

- For installation of rear axle shaft, refer to "Rear Axle Shaft and Wheel Bearing Removal and Installation (for 4WD Model)" in Section 3E.
- For installation of rear brake drum, refer to "Brake Drum Removal and Installation (for 4WD Model)" in Section 5C.
- Refill differential housing with new specified oil referring to "Rear Differential Gear Oil Change" in this section for refill.
- Make sure to purge air out of brake circuit referring to "Air Bleeding of Brake System" in Section 5. Then, ensure that joint seam of pipe is free from oil leak.

Rear Differential Disassembly

Disassembly

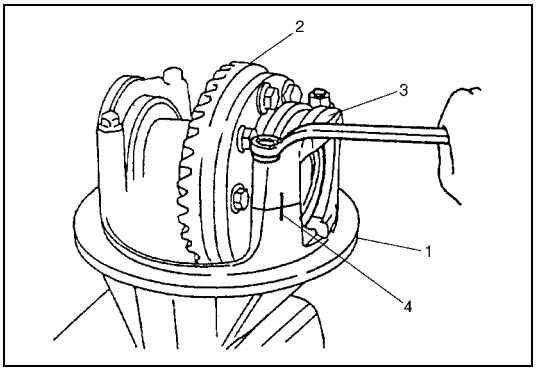

1) Put match marks (4) on differential side bearing caps (3) and differential carrier (1).

NOTE:

Check number of shims and thickness of each shim in advance.

2) Take off differential side bearing caps by removing their bolts and remove differential gear assembly (2) with shims.

3) With aluminum plates placed on vise first, grip differential case with it and remove drive bevel gear by removing its bolts.

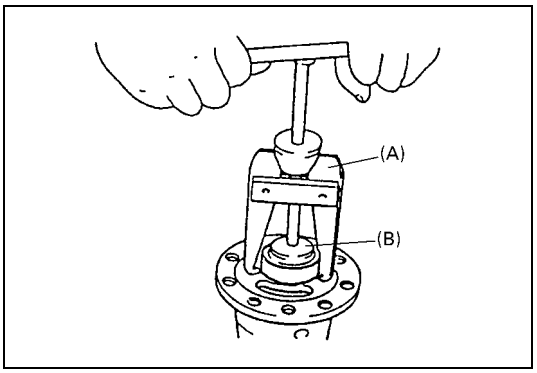

4) Using special tools, pull out differential side bearings.

Special tool
(A): 09913-60910
(B): 09925-88210

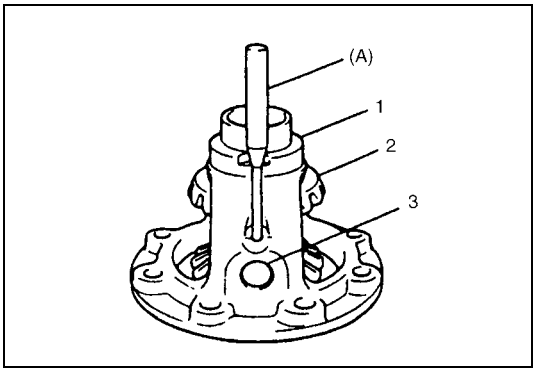

5) Drive out spring pin with special tool.

Special tool
(A): 09922-85811

1.	Differential case
2.	Differential side gear
3.	Differential pinion shaft

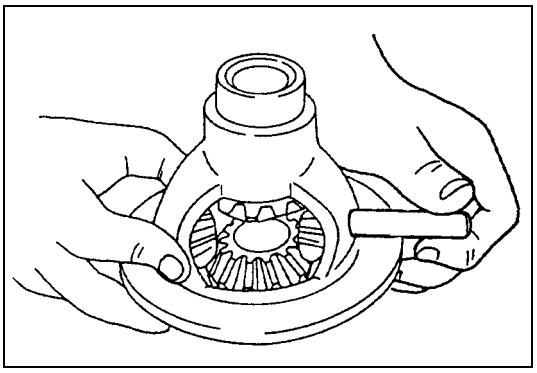

6) Remove differential pinion shaft.
7) Remove differential side gears, pinions and washers.

8) Uncaulk drive bevel pinion nut.

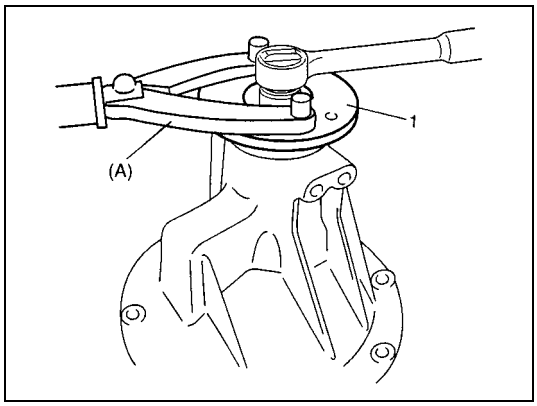

9) Hold companion flange (1) with special tool and then remove drive bevel pinion nut.

Special tool
(A): 09930-40113

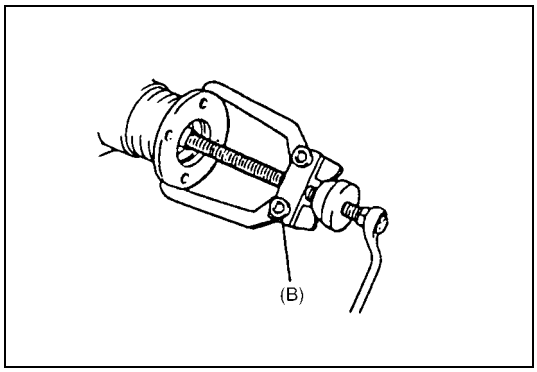

10) Remove companion flange from drive bevel pinion. Use special tool if it is hard to remove.

Special tool
(B): 09913-65135

11) Remove drive bevel pinion with rear bearing, and spacer from differential carrier.

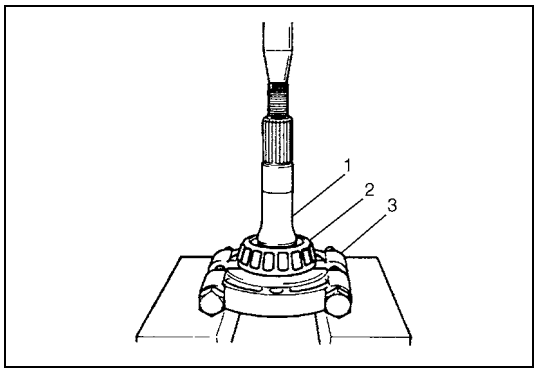

12) Remove drive bevel pinion rear bearing (2) by using bearing puller (3) and hydraulic press.

1. Drive bevel pinion

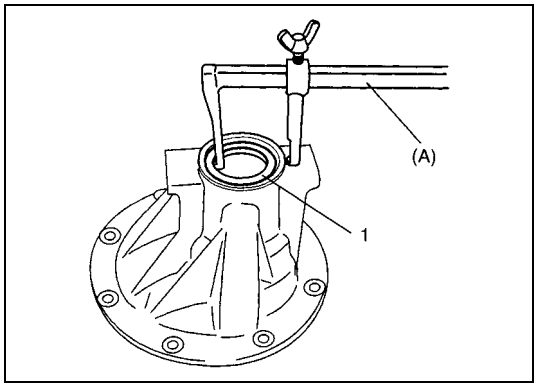

13) Remove oil seal (1) from differential carrier by using special tool.

Special tool
(A): 09913-50121

14) Remove drive bevel pinion front bearing.

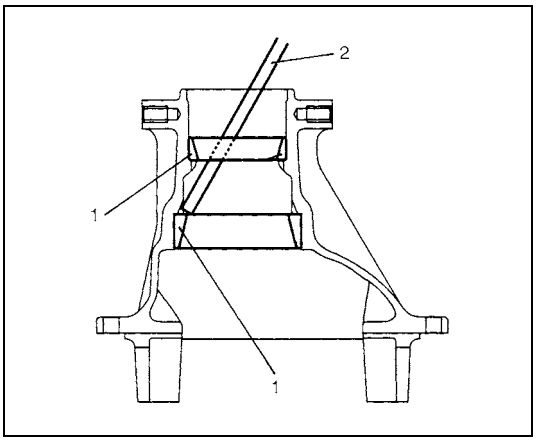

15) Drive out drive bevel pinion bearing outer races (1) by using metallic stick (2).

Rear Differential Inspection

- Check companion flange for wear of damage.
- Check bearings for wear or discoloration.
- Check differential carrier for cracks.
- Check drive bevel pinion and bevel gear for wear or cracks.
- Check side gears, pinion gears and pinion shaft for wear or damage.
- Check side gear spline for wear or damage.

Rear Differential Adjustment and Assembly

CAUTION:
- **Drive bevel gear and pinion must be replaced as a set when either replacement becomes necessary.**
- **When replacing taper roller bearing, replace as inner race & outer race assembly.**

Judging from faulty conditions noted before disassembly and what is found through visual check of bearing and gear tooth etc. after disassembly, prepare replacing parts and proceed to reassembly according to procedures as described below. Make sure that all parts are clean.

Drive bevel pinion bearing outer race

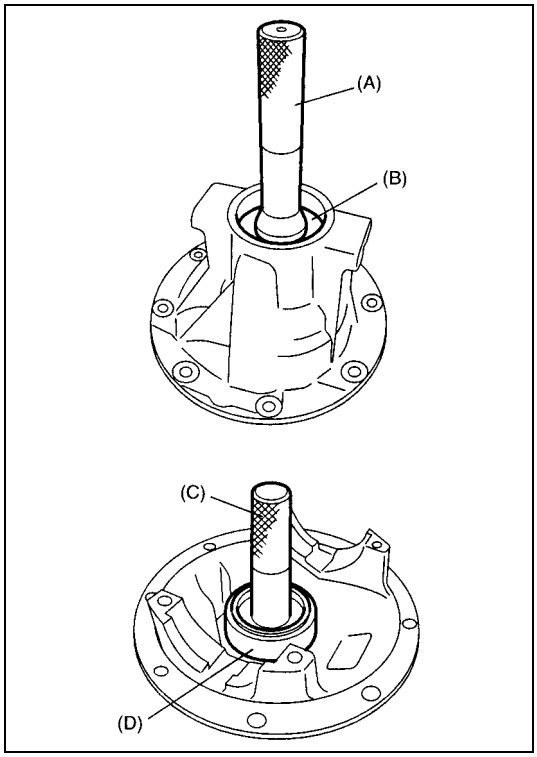

CAUTION:
Perform press-fitting carefully so as not to tilt outer race.

For press-fitting bevel pinion bearing outer races, use special tools as shown.

Special tool
(A): 09925-98210
(B): 09941-34513-004
(C): 09924-74510
(D): 09951-16090

Differential case assembly

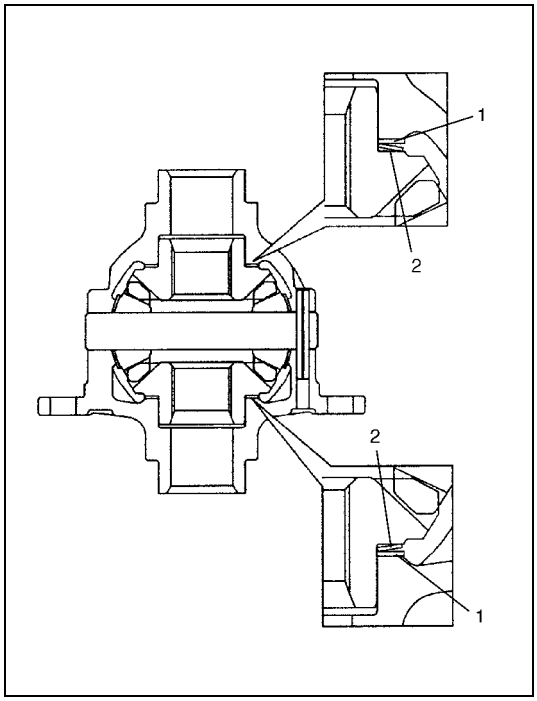

1) Assemble differential case assembly noting installing position and direction of differential side washer (1) and spring washer (2).

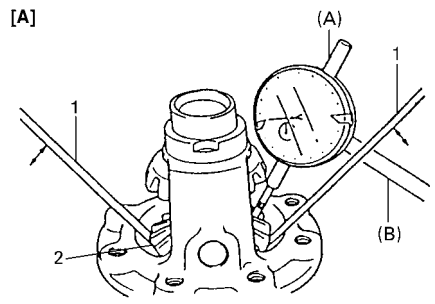

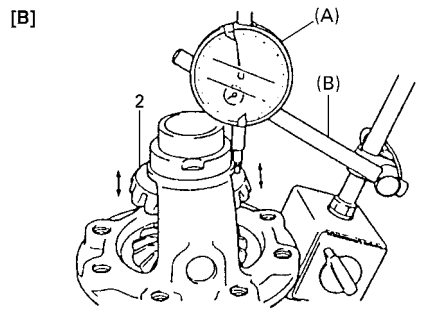

2) Measure thrust play of differential gear (2) as follows.

Special tool
(A): 09900-20607
(B): 09900-20701

Differential gear thrust play
0 – 0.37 mm (0 – 0.014 in.)

[A]: Right side
[B]: Left side

Right side

- Hold differential assembly with soft jawed vise and apply measuring tip of dial gauge to top surface of gear (2).
- Using 2 screwdrivers (1), move gear (2) up and down and read movement of dial gauge pointer.

Left side

- Using similar procedure to the above, set dial gauge tip to gear shoulder.
- Move gear (2) up and down by hand and read dial gauge.

3) If thrust play is out of specification, select suitable side washer from among the following available size, install it and check again that specified gear thrust play is obtained.

Available side washer thickness
0.10, 0.30, 0.50 and 0.70 mm (0.0039, 0.0118, 0.0196 and 0.0275 in.)

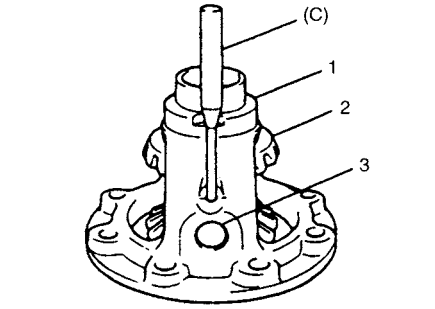

4) Drive in new spring pin for differential side pinion shaft till it is flush with differential case surface.

Special tool
(C): 09922-85811

1. Differential case
2. Differential gear
3. Differential pinon shaft

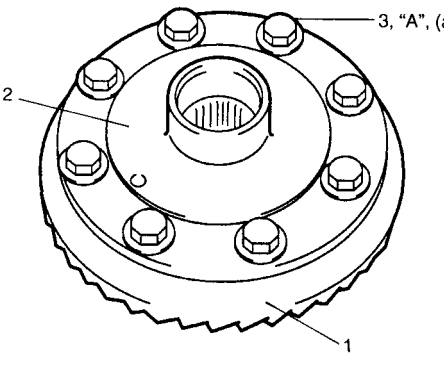

CAUTION:
Use of any other bolts than that specified is prohibited.

5) Put drive bevel gear (1) on differential case (2).
6) Apply thread lock cement to drive bevel gear bolts (3) and fasten drive bevel gear (1) on differential case (2) by tightening bolts to specified torque.

"A": Cement 99000-32110

Tightening torque
Drive bevel gear bolts
(a): 80 N·m (8.0 kg-m, 58.0 lb-ft)

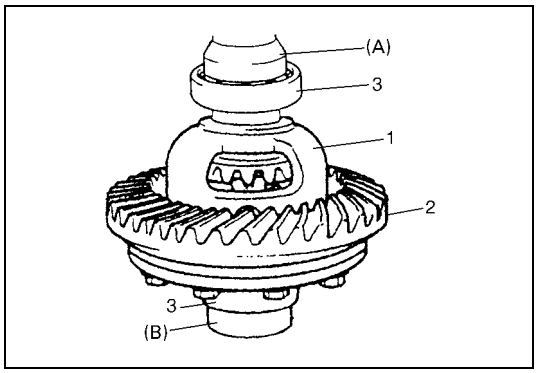

7) Press-fit differential side bearings (3) to differential case (1) by using special tools.

Special tool
(A): 09951-76010
(B): 09951-16060

2.	Drive bevel gear

Differential carrier and drive bevel pinion

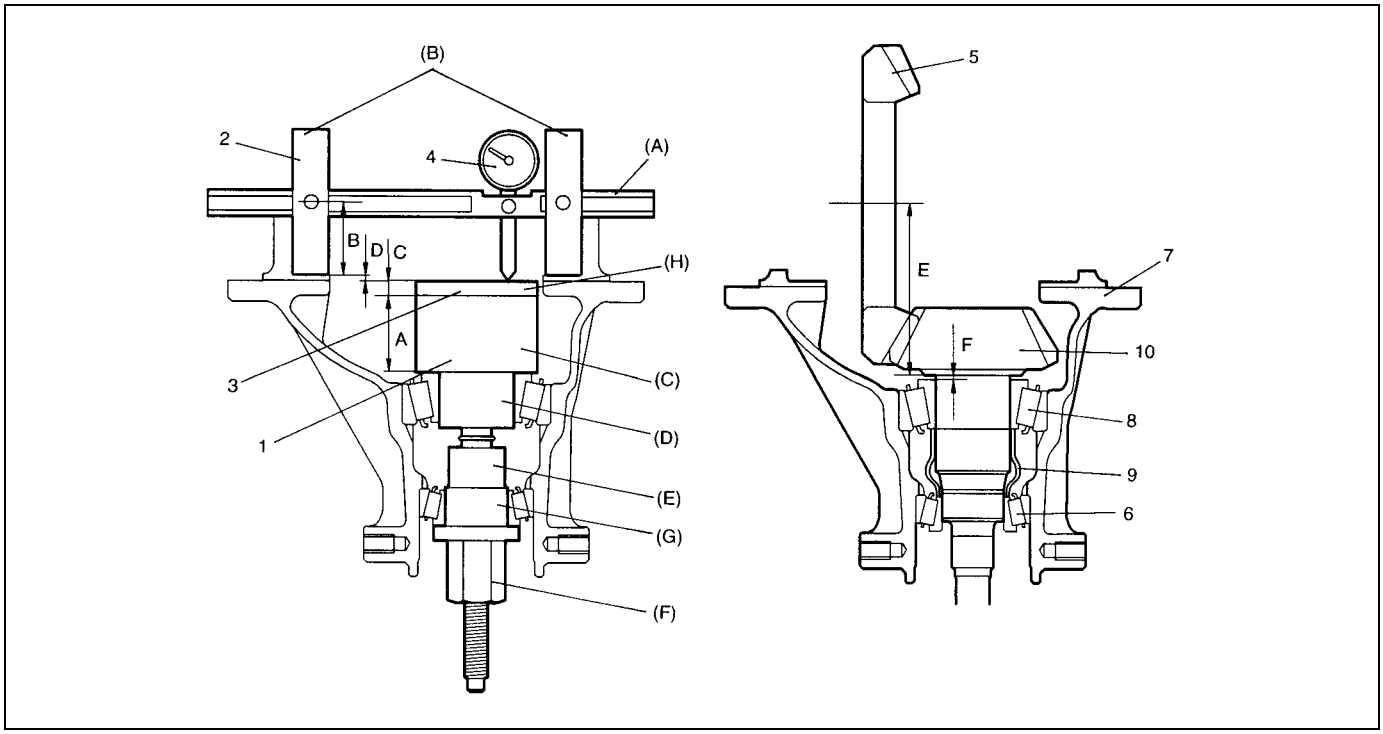

A: Dummy height of pinion form dummy (= 40 mm/1.575 in.)	F: Shim thickness for mounting distance adjustment (= D)	6. Front bearing
B: Radius of bearing form dummy with dummy shaft (= 36 mm/1.417 in.)	1. Pinion form dummy	7. Differential carrier
C: Block dummy thickness (= 4 mm/0.1575 in.)	2. Bearing form dummy with dummy shaft	8. Rear bearing
A + B + C: Mounting distance adjusting dummy total size (= 80 mm/ 3.150 in.)	3. Block dummy	9. Spacer
D: Measured dimension	4. Dial gauge	10. Drive bevel pinion
E: Drive bevel pinion mounting distance (= 80 mm/3.150 in.)	5. Drive bevel gear	

Special tool
(A): 09922-76120
(B): 09922-76230
(C): 09922-76140
(D): 09922-76410
(E): 09922-76340
(F): 09922-76150
(G): 09922-76320
(H): 09922-76510

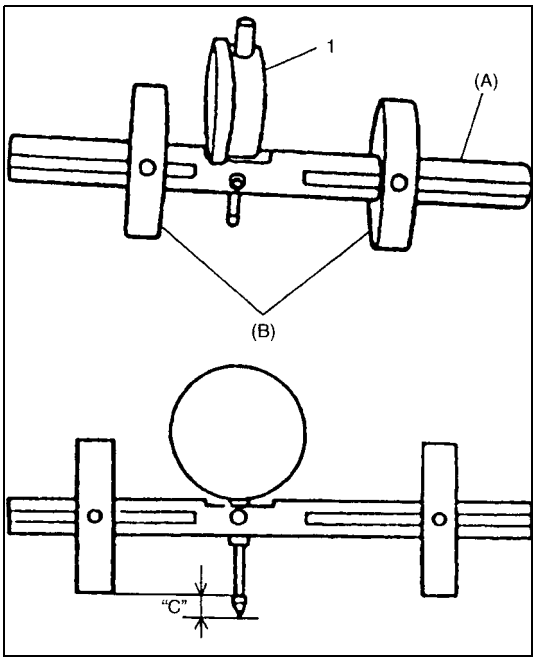

1) Assemble bearing form dummy with dummy shaft using special tools.

Special tool
(A): 09922-76120
(B): 09922-76230

2) Install dial gauge (1) to bearing form dummy with dummy shaft as shown in figure.

Special tool set distance (reference)
"c": 2 – 3 mm (0.079 – 0.118 in.)

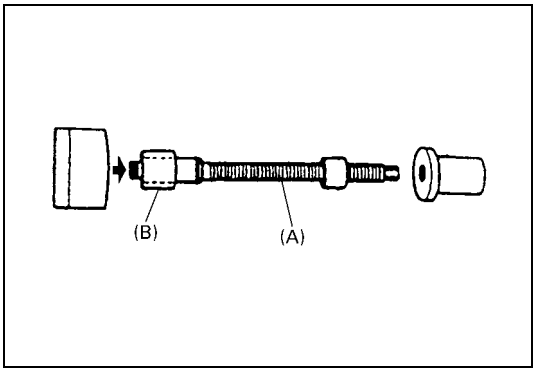

3) Assemble pinion form dummy using special tools.

Special tool
(A): 09922-76140
(B): 09922-76410

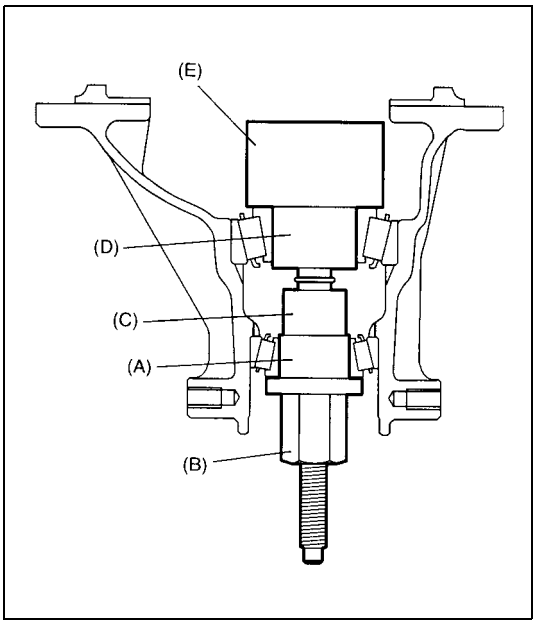

NOTE:

This installation requires no spacer or oil seal.

4) Apply gear oil to drive bevel pinion rear bearing, install rear bearing to pinion form dummy and then install pinion form dummy to differential carrier.
5) Apply gear oil to drive bevel pinion front bearing and install bearing to pinion form dummy with other special tools as shown in figure.

Special tool
(A): 09922-76320
(B): 09922-76150
(C): 09922-76340
(D): 09922-76410
(E): 09922-76140

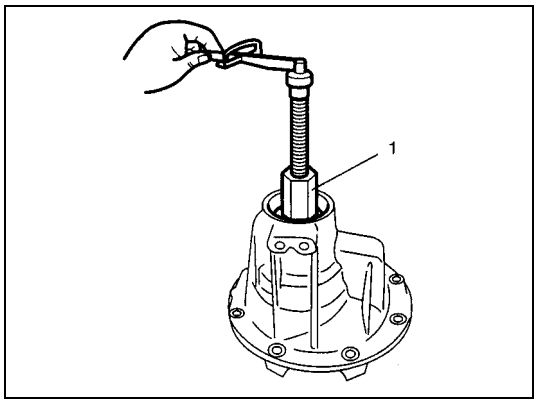

NOTE:

Before taking measurement, check for rotation by hand more than 15 revolutions.

6) Tighten bevel pinion nut (special tool) (1) so that specified bearing preload is obtained.

Drive bevel pinion bearing preload (at 50 rpm)
0.5 – 1.3 N·m (5.0 – 13.0 kg-cm, 0.35 – 0.90 lb-ft)

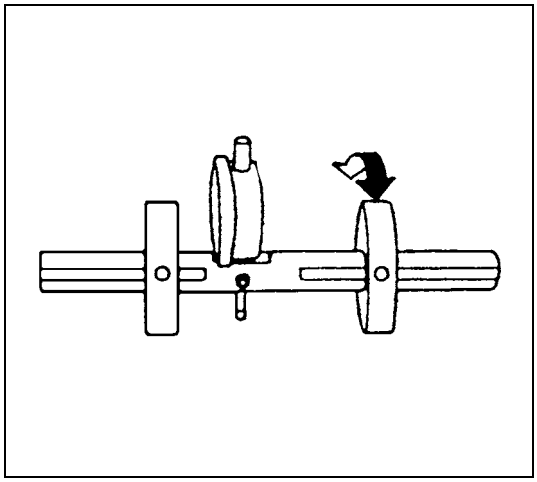

NOTE:

- **When setting dial gauge to bearing form dummy with dummy shaft, tighten screw lightly. Be careful not to overtighten it, which will cause damage to dial gauge.**
- **With dial gauge set, turn dummy back and forth by hand a couple of times and attain accurate 0 (zero) adjustment.**
- **It is desirable that short pointer indicates beyond 2 mm when long one is at 0 (zero).**

7) Set dial gauge to bearing form dummy with dummy shaft and make 0 (zero) adjustment on surface plate.

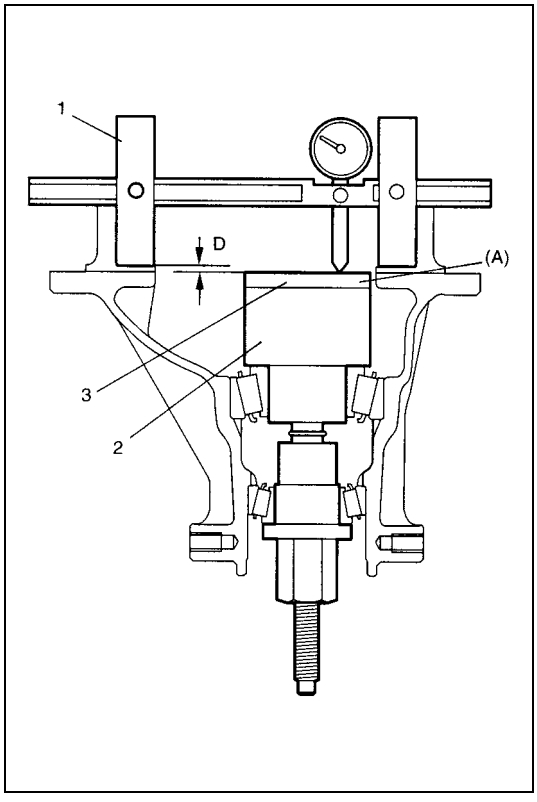

8) Put block dummy (3) on pinion form dummy (2).

Special tool
(A): 09922-76510

NOTE:

- **Repeat turning back and forth of dummy and measure distance as far as top surface of block dummy accurately.**
- **When dial gauge measuring tip extends from 0 (zero) position, pointer turns counterclockwise.**
- **Measured value may exceed 1 mm. Therefore, it is also necessary to know reading of short pointer.**

9) Place zero-adjusted bearing form dummy with dummy shaft (1) and dial gauge set on block dummy (3) and take measurement between zero position and extended dial gauge measuring tip.
10) Obtain adjusting shim thickness by using measured value by dial gauge in the following equation.

Necessary shim thickness	=	Dial gauge measured value D

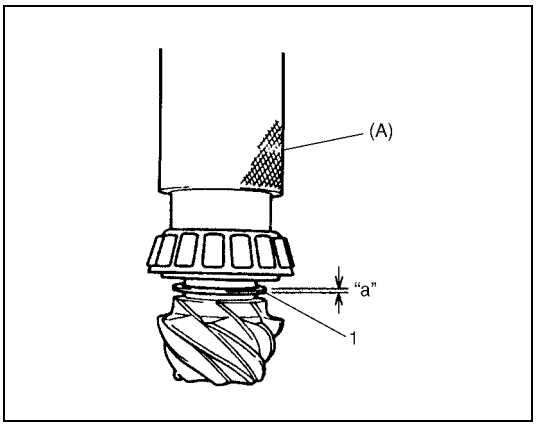

11) Select adjusting shim(s) (1) closest to calculated value from among following available sizes and put it in place and then press-fit rear bearing.

Special tool
(A): 09940-51710

Available shim thickness
"a": 0.30, 1.00, 1.03, 1.06, 1.09, 1.12, 1.15, 1.18, 1.21, 1.24, 1.27, and 1.30 mm (0.012, 0.039, 0.041, 0.042, 0.043, 0.044, 0.045, 0.046, 0.048, 0.049, 0.050 and 0.051 in.)

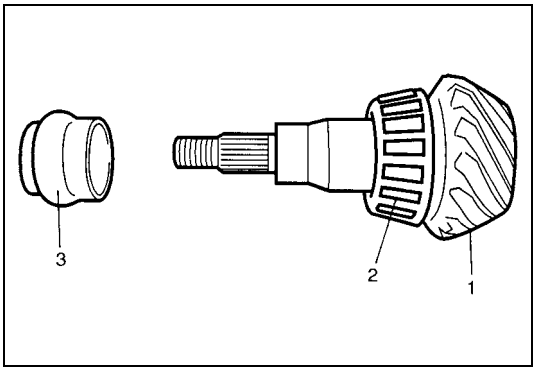

NOTE:

- **Make sure to use new spacer (3) for reinstallation.**
- **Apply differential oil to bearings.**

12) With new pinion spacer (3) inserted as shown, install front bearing to differential carrier.

1.	Drive bevel pinion
2.	Rear bearing

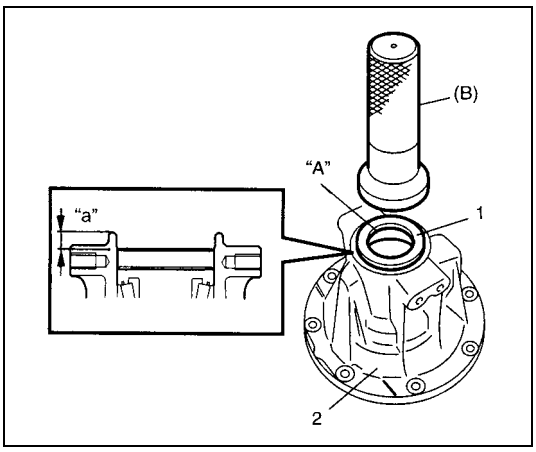

13) Install new oil seal (1) into differential carrier (2) by using special tool and hammer.

Special tool
(B): 09913-75810

Differential carrier oil seal installing depth
"a": 7.5 – 8.5 mm (0.295 – 0.335 in.)

14) Apply grease to new oil seal lip.

"A": Grease 99000-25010

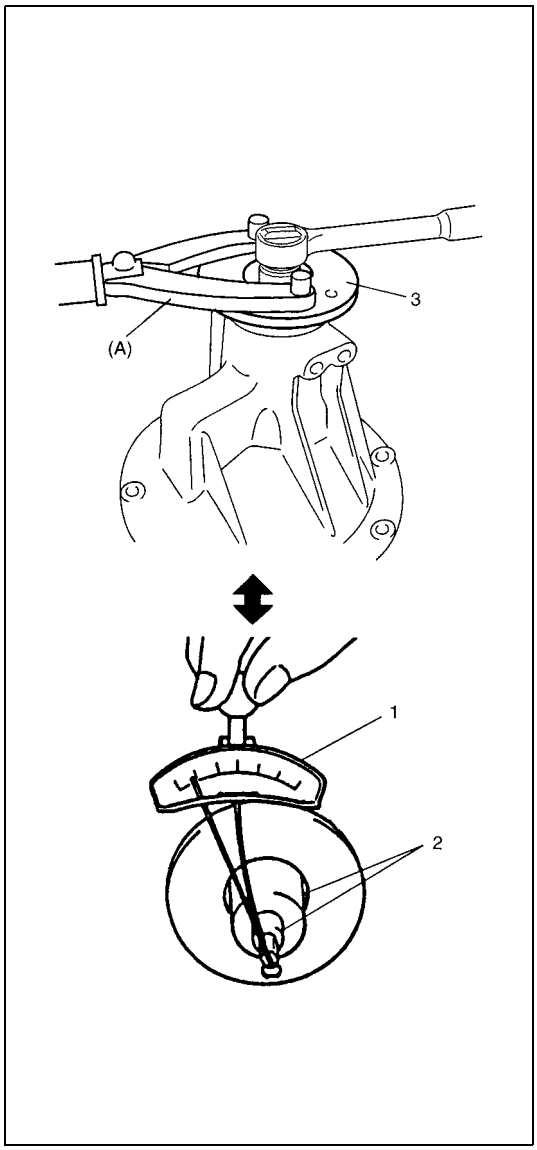

NOTE:

- **Before taking measurement, check for smooth rotation by hand.**
- **Drive bevel pinion bearing preload is adjusted by tightening drive bevel pinon nut to deform spacer.**
  Therefore, be sure to use a new spacer for adjustment and tighten drive bevel pinion nut step by step and check for starting torque (preload) as often as tightening to prevent over crushing of spacer.
  If exceeds specification given below during adjustment, replace spacer and repeat preload adjustment procedure. Attempt to decrease starting torque (preload) by loosening drive bevel pinon nut will not do.
- **For measuring drive bevel pinion bearing preload, turning drive bevel pinion at about 50 rpm is required.**

15) Install companion flange (3) to drive bevel pinion and tighten drive bevel pinion nut gradually with special tool, set preload of bearing to specification.

Tightening torque
Drive bevel pinion nut (reference)
70 – 250 N·m (7.0 – 25.0 kg-m, 51.0 – 181.0 lb-ft)

Drive bevel pinion bearing preload
0.5 – 1.3 N·m (5.0 – 13.0 kg-cm, 0.35 – 0.90 lb-ft)

Special tool
(A): 09930-40113

1.	Torque wrench
2.	Socket with adapter

Differential Assembly

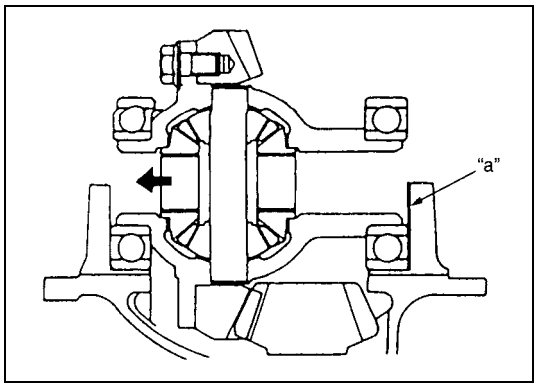

1) Place differential gear case assembly to differential carrier, push differential case to left side as shown in figure.
   Then measure clearance "a" between side bearing and differential carrier by using thickness gauge.
   Select shims closest to measured value.

Available shim thickness
0.1, 0.3, 0.5 and 0.7 mm (0.0039, 0.0117, 0.0197 and 0.0276 in.)

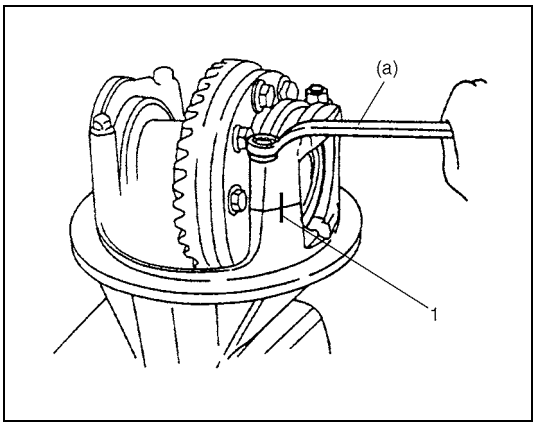

NOTE:

- **Align match marks (1) on caps and carrier.**
- **Apply differential gear oil to bearings.**

2) Divide selected shim(s) between both sides (right and left) and install them to differential carrier. Then install differential side bearing caps.

Tightening torque
Differential side bearing cap bolts
(a): 23 N·m (2.3 kg-m, 17.0 lb-ft)

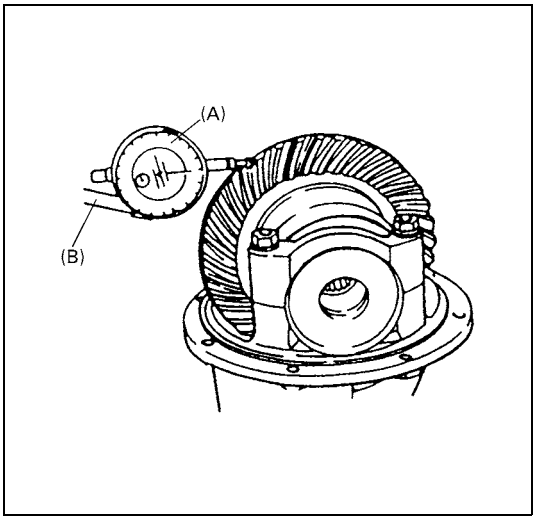

NOTE:

Be sure to apply measuring tip of dial gauge at right angles to convex side (drive side) of tooth.

3) Measure backlash by using dial gauge.
If backlash is out of specification, change division of shims so that backlash is within specification.

Drive bevel gear backlash
0.10 – 0.20 mm (0.0039 – 0.0078 in.)

Special tool
(A): 09900-20607
(B): 09900-20701

4) Check gear tooth contact as follows.

CAUTION:

When applying red lead paste to teeth, be sure to paint tooth surfaces uniformly. The paste must not be too dry or too fluid.

a) After cleaning tooth surface of drive bevel gear, paint teeth with gear marking compound evenly by using brush or sponge etc.

NOTE:

Be careful not to turn bevel gear more than one full revolution, or it will hinder accurate check.

b) Turn gear to bring its painted part in mesh with bevel pinion and turn it back and forth by hand to repeat their contact.
c) Bring painted part up and check contact pattern, referring to the following chart. If contact pattern is not normal, readjust or replace as necessary according to instruction in chart.

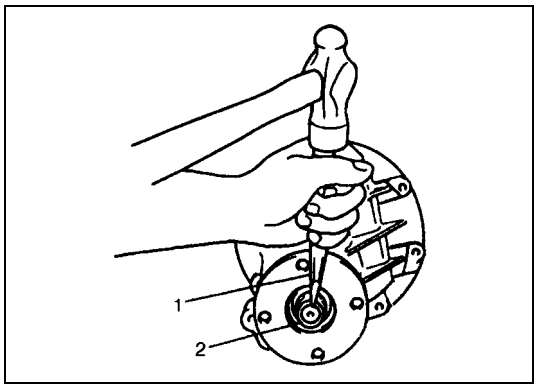

5) After completing of gear tooth contact check, caulk drive bevel pinion nut (2) with caulking tool (1) and hammer.

Gear Tooth Contact

Tooth Contact Pattern	Diagnosis and Remedy
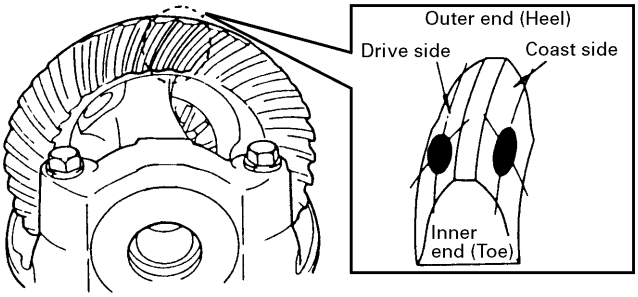	NORMAL
	HIGH CONTACT Pinion is positioned too far from the center of drive bevel gear. 1) Increase thickness of pinion height adjusting shim and position pinion closer to gear center. 2) Adjust drive bevel gear backlash to specification. 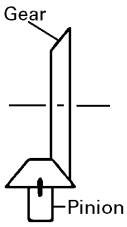
	LOW CONTACT Pinion is positioned too close to the center of drive bevel gear. 1) Decrease thickness of pinion height adjusting shim and position pinion farther from gear center. 2) Adjust drive bevel gear backlash to specification. 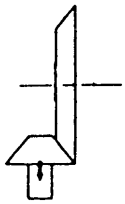
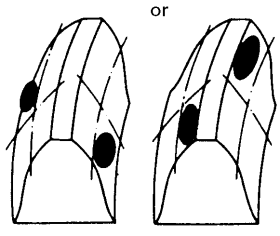	These contact patterns indicate that the “offset” of differential is too much or too little. The remedy is to replace the carrier with a new one.

Tooth Contact Pattern	Diagnosis and Remedy
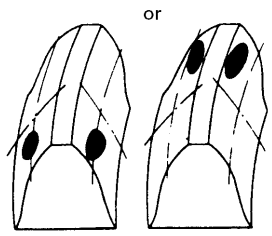	These contact patterns, located on toe or heel on both drive and coast sides, mean that 1) both pinion and gear are defective, 2) carrier is not true and square, or 3) gear is not properly seated on differential case. The remedy is to replace the defective member.
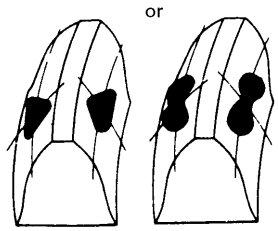	Irregular patterns: If the pattern is not oval, it means that bevel gear is defective. High or low spots on tooth surfaces or on the seat of bevel gear are the cause of irregular patterns appearing on some teeth. The remedy is to replace the pinion and-gear set and, if the seat is defective, so is transfer case.

Tightening Torque Specification

Fastening part	Tightening torque		
	N•m	kg-m	lb-ft
Rear differential oil drain plug	55	5.5	40.0
Rear differential oil level/filler plug	50	5.0	36.5
Drive bevel pinion nut (reference)	70 – 250	7.0 – 25.0	51.0 – 181.0
Drive bevel gear bolts	80	8.0	58.0
Differential side bearing cap bolts	23	2.3	17.0
Differential carrier bolts	23	2.3	17.0
Propeller shaft bolts	23	2.3	17.0

Required Service Material

Material	Recommended product (Part Number)	Use
Thread lock cement	THREAD LOCK CEMENT 1322 (99000-32110)	Drive bevel gear bolts
Lithium grease	SUZUKI SUPER GREASE A (99000-25010)	Oil seal lips
Sealant	SUZUKI BOND NO. 1215 (99000-31110)	• Thread part of differential carrier bolt • Mating surface of differential carrier • Mating surface of rear axle housing

Special Tool

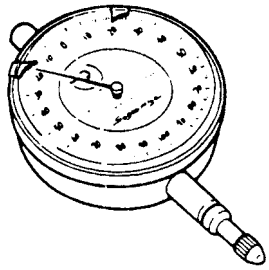 09900-20607 Dial gauge	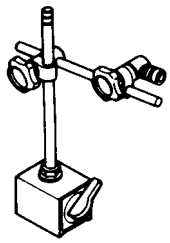 09900-20701 Magnetic stand	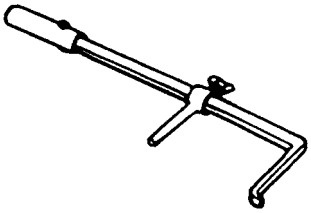 09913-50121 Oil seal remover	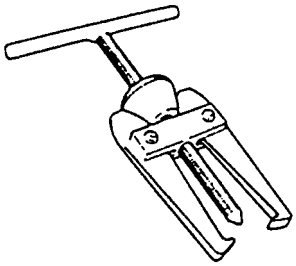 09913-60910 Bearing puller
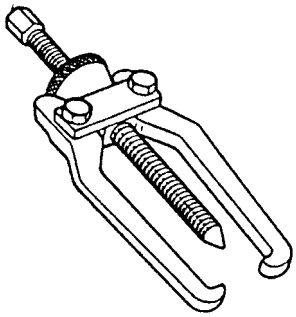 09913-65135 Bearing puller	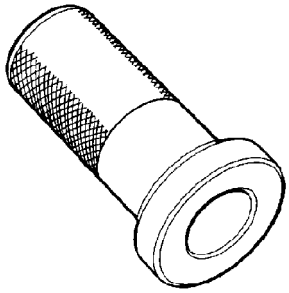 09913-75810 Bearing installer	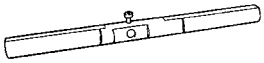 09922-76120 Dummy shaft	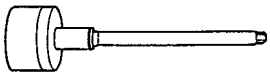 09922-76140 Bevel pinion shaft
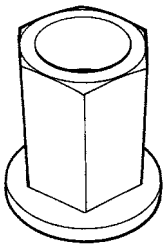 09922-76150 Bevel pinion nut	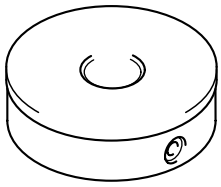 09922-76230 Bevel gear dummy	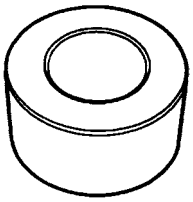 09922-76320 Rear collar	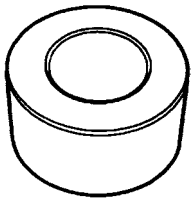 09922-76340 Rear collar
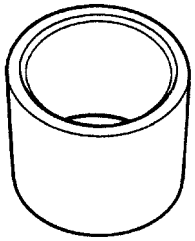 09922-76410 Front collar	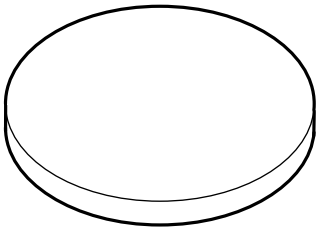 09922-76510 Gauge block	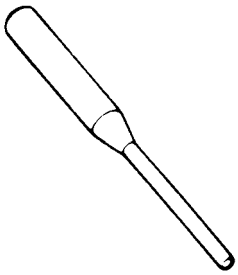 09922-85811 Spring pin remover	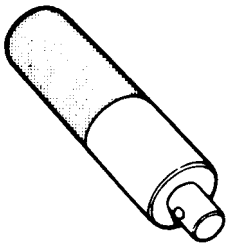 09924-74510 Bearing installer handle

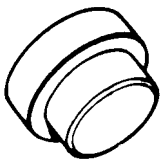	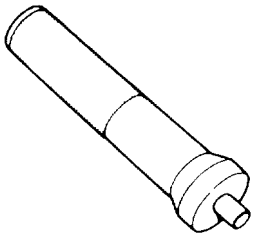	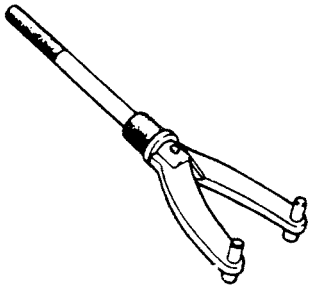	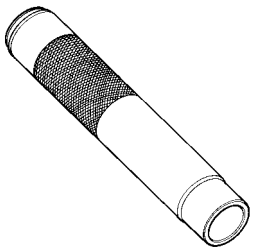
09925-88210 Bearing puller attachment	09925-98210 Bearing installer	09930-40113 Flange holder	09940-51710 Bearing installer
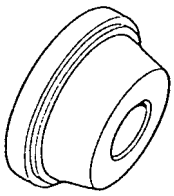	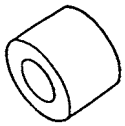	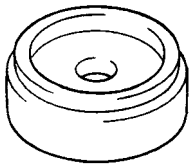	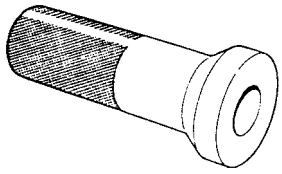
09941-34513-004 Bearing installer	09951-16060 Lower arm bush remover	09951-16090 Oil seal installer	09951-76010 Bearing installer

SECTION 8

BODY ELECTRICAL SYSTEM

WARNING:

For vehicles equipped with Supplemental Restraint (Air Bag) System

- **Service on and around the air bag system components or wiring must be performed only by an authorized SUZUKI dealer. Refer to "System Components and Wiring Location View" under "General Description" in air bag system section in order to confirm whether you are performing service on or near the air bag system components or wiring. Please observe all WARNINGS and "Service Precautions" under "On-Vehicle Service" in air bag system section before performing service on or around the air bag system components or wiring. Failure to follow WARNINGS could result in unintentional activation of the system or could render the system inoperative. Either of these two conditions may result in severe injury.**
- **Technical service work must be started at least 90 seconds after the ignition switch is turned to the "LOCK" position and the negative cable is disconnected from the battery. Otherwise, the system may be activated by reserve energy in the Sensing and Diagnostic Module (SDM).**

WIRING SYSTEM
(Harness, Connectors, Fuses, Relay, Switches, Grounds, System Circuit Diagram) . . . . . Section 8A
LIGHTING SYSTEM . . . . . Section 8B
INSTRUMENTATION/DRIVER INFORMATION . . . . . Section 8C
WINDOWS, MIRRORS, SECURITY AND LOCKS . . . . . Section 8D
IMMOBILIZER CONTROL SYSTEM. . . . . Section 8G

SECTION 8B

LIGHTING SYSTEM

WARNING:

For vehicles equipped with Supplement Restraint (Air Bag) System:

- **Service on around the air bag system components or wiring must be performed only by an authorized SUZUKI dealer. Refer to "System Components and Wiring Location View" in Section 10B in order to confirm whether you are performing service on or near the air bag system components or wiring. Please observe all WARNINGS before performing service on or around the air bag system components or wiring. Failure to follow WARNINGS could result in unintentional activation of the system or could render the system inoperative. Either of these two conditions may result in severe injury.**
- **Technical service work must be started at least 90 seconds after the ignition switch is turned to the "LOCK" position and the negative cable is disconnected from the battery. Otherwise, the system may be activated by reserve energy in the Sensing and Diagnostic Module (SDM).**

CONTENTS

Diagnosis 8B-2
Headlight Symptom Diagnosis 8B-2
Headlight Leveling System Symptom Diagnosis 8B-2
Daytime Running Light (D.R.L.) System (If Equipped) Symptom Diagnosis 8B-2
Turn Signal and Hazard Warning Light Symptom Diagnosis 8B-3
Clearance, Tail and Licence Plate Lights Symptom Diagnosis 8B-4
Backup Lights Symptom Diagnosis 8B-4
Brake Lights Symptom Diagnosis 8B-4
Front Fog Lights (If Equipped) Symptom Diagnosis 8B-5
Rear Fog Light Symptom Diagnosis 8B-5
Interior Light Symptom Diagnosis 8B-5
On-Vehicle Service 8B-6
Cautions in Body Electrical System Servicing 8B-6
Light Control Switch Combination Unit Description 8B-6
DRL System Operation Inspection 8B-7
Lighting Controller Circuit Inspection 8B-7
Light Control Switch Combination Unit Removal and Installation 8B-10
Light Control Switch Combination Unit Inspection 8B-11
Lighting switch 8B-11
Headlight leveling switch 8B-11
Front fog light switch 8B-12
Rear fog light switch 8B-12
Illumination control switch 8B-13
Interior light switch 8B-13
Headlight Leveling Actuator On-Vehicle Inspection 8B-14
Dimmer/Passing Switch Removal and Installation 8B-14
Dimmer/Passing Switch Inspection 8B-14
Headlight Assembly Removal and Installation 8B-15
Headlight Aiming Adjustment With Screen 8B-16
Headlight Bulb Replacement 8B-17
Front Fog Light Aiming Adjustment With Screen 8B-18
Basic aiming 8B-18
Turn Signal Switch Removal and Installation 8B-19
Turn Signal Switch Inspection 8B-19
Hazard Warning Light Switch Removal and Installation 8B-20
Hazard Warning Light Switch Inspection 8B-20
Turn Signal and Hazard Warning Light Relay Removal and Installation 8B-20
Turn Signal and Hazard Warning Light Relay Inspection 8B-21

Diagnosis

Headlight Symptom Diagnosis

Condition	Possible Cause	Correction
Only one light does not light	Bulb burnt out	Replace bulb.
	Main fuse blown	Replace fuse to check for short.
	Socket, wiring or grounding faulty	Repair socket or circuit.
No headlight light when lighting switch is in "HEAD" position	Main fuse blown	Replace fuse to check for short.
	Headlight relay faulty	Replace headlight relay
	Lighting or dimmer and passing switch faulty	Check lighting or dimmer and passing switch referring to "Light Control Switch Combination Unit Inspection" or "Dimmer/Passing Switch Inspection" in this section.

Headlight Leveling System Symptom Diagnosis

Condition	Possible Cause	Correction
Neither headlight moves	Fuse blown	Replace fuse to check for short.
	Headlight leveling switch faulty	Check headlight leveling switch referring to "Light Control Switch Combination Unit Inspection" in this section.
	Supply voltage too low	Check charging system referring to "Generator" in Section 6H.
Only one headlight does not move	Headlight leveling actuator faulty	Replace headlight housing.
	Socket, wiring or grounding faulty	Repair socket or circuit.

Daytime Running Light (D.R.L.) System (If Equipped) Symptom Diagnosis

Condition	Possible Cause	Correction
No headlight light when lighting switch is in "OFF" position and engine is running	Engine oil pressure switch faulty	Check engine oil pressure switch referring to "Engine Oil Pressure Switch Inspection" in Section 8C.
	Lighting switch faulty	Check lighting switch referring to "Light Control Switch Combination Unit Inspection" in this section.
	Wiring or grounding faulty	Repair circuit.
	Lighting controller faulty	Check lighting controller referring to "Lighting Controller Circuit Inspection" in this section.

Condition	Possible Cause	Correction
Headlights still light even if lighting switch is in "OFF" position and engine is stopped	Engine oil pressure switch	Check engine oil pressure switch referring to "Engine Oil Pressure Switch Inspection" in Section 8C.
	Lighting switch faulty	Check lighting switch referring to "Light Control Switch Combination Unit Inspection" in this section.
	Wiring or grounding faulty	Repair circuit.
	Lighting controller faulty	Check lighting controller referring to "Lighting Controller Circuit Inspection" in this section.
Headlights still light even if lighting switch is in "SMALL" position and engine is running	Lighting switch faulty	Check lighting switch referring to "Light Control Switch Combination Unit Inspection" in this section.
	Wiring or grounding faulty	Repair circuit.
	Lighting controller faulty	Check lighting controller referring to "Lighting Controller Circuit Inspection" in this section.

Turn Signal and Hazard Warning Light Symptom Diagnosis

Condition	Possible Cause	Correction
Flash rate high or one side only flashes	Wiring or grounding faulty	Repair circuit.
	Incorrect bulb	Replace bulb.
	Bulb burnt out	Replace bulb.
	Turn signal and hazard warning light relay faulty	Check turn signal and hazard warning light relay referring to "Turn Signal and Hazard Warning Light Relay Inspection" in this section.
	Open circuit or high resistance existing between turn signal switch and turn signal lights on one side	Repair circuit.
No flashing	Blown fuse on turn signal and hazard warning light circuit	Replace fuse to check for short.
	Open circuit or high resistance existing between battery and turn signal or hazard warning light switch	Repair circuit.
	Turn signal and hazard warning light relay faulty	Check turn signal and hazard warning light relay referring to "Turn Signal and Hazard Warning Light Relay Inspection" in this section.
	Turn signal switch faulty	Check turn signal switch referring to "Turn Signal Switch Inspection" in this section.
	Hazard warning light switch faulty	Check hazard warning light switch referring to "Hazard Warning Light Switch Inspection" in this section.

Condition	Possible Cause	Correction
Flash rate low	Supply voltage too low	Check charging system referring to "Generator" in Section 6H.
	Turn signal and hazard warning light relay faulty	Check turn signal and hazard warning light relay referring to "Turn Signal and Hazard Warning Light Relay Inspection" in this section.

Clearance, Tail and Licence Plate Lights Symptom Diagnosis

Condition	Possible Cause	Correction
One of lights does not light	Bulb burnt out	Replace bulb.
	Wiring or grounding faulty	Repair circuit.
No light comes on when lighting switch is in "SMALL" position	Fuse blown	Replace fuse to check for short.
	Lighting switch faulty	Check lighting switch referring to "Light Control Switch Combination Unit Inspection" in this section.

Backup Lights Symptom Diagnosis

Condition	Possible Cause	Correction
Backup lights do not light	Fuse blown	Replace fuse to check for short.
	Bulb burnt out	Replace bulb.
	Backup light switch faulty	Check backup light switch referring to "Back Up Lamp Switch Inspection" in Section 7A1.
	Wiring or grounding faulty	Repair circuit.
Backup lights remain ON	Wiring or grounding faulty	Repair circuit.
	Backup light switch faulty	Check backup light switch referring to "Back Up Lamp Switch Inspection" in Section 7A1.

Brake Lights Symptom Diagnosis

Condition	Possible Cause	Correction
Brake lights do not light	Fuse blown	Replace fuse to check for short.
	Bulb burnt out	Replace bulb.
	Brake light switch faulty	Adjust or replace brake light switch.
	Wiring or grounding faulty	Repair circuit.
Brake lights stay ON	Brake light switch faulty	Adjust or replace brake light switch.
Only one brake light does not light	Bulb burnt out	Replace bulb.
	Wiring or grounding faulty	Repair circuit.

Front Fog Lights (If Equipped) Symptom Diagnosis

Condition	Possible Cause	Correction
Only one front fog light does not light	Bulb burnt out	Replace bulb.
	Socket, wiring or grounding faulty	Repair socket or circuit.
No front fog light lights	Fuse blown	Replace fuse to check for short.
	Wiring or grounding faulty	Repair circuit.
	Front fog light switch faulty	Check front fog light switch referring to “Light Control Switch Combination Unit Inspection” in this section.
	Lighting switch faulty	Check lighting switch referring to “Light Control Switch Combination Unit Inspection” in this section.
	Lighting controller faulty	Check lighting controller referring to “Lighting Controller Circuit Inspection” in this section.

Rear Fog Light Symptom Diagnosis

Condition	Possible Cause	Correction
No rear fog light lights	Fuse blown	Replace fuse to check for short.
	Wiring or grounding faulty	Repair circuit.
	Rear fog light switch faulty	Check rear fog light switch referring to “Light Control Switch Combination Unit Inspection” in this section.
	Lighting switch faulty	Check Lighting switch referring to “Light Control Switch Combination Unit Inspection” in this section.
	Lighting controller faulty	Check lighting controller referring to “Lighting Controller Circuit Inspection” in this section.

Interior Light Symptom Diagnosis

Condition	Possible Cause	Correction
Interior light does not light up	Fuse blown	Replace fuse to check for short.
	Bulb burnt out	Replace bulb.
	Wiring or grounding faulty	Repair circuit.
	Door switch faulty	Check door switch referring to “Door Switch Inspection” in Section 8D.
	Interior light faulty	Check interior light.
	Interior light switch faulty	Check interior light switch referring to “Light Control Switch Combination Unit Inspection” in this section.

On-Vehicle Service

Cautions in Body Electrical System Servicing

When performing works related to electric system, observe the cautions described in “Precautions for Electrical Circuit Service” in Section 0A of this manual for the purpose of protection of electrical parts and prevention of a fire from occurrence.

Light Control Switch Combination Unit Description

Light control switch combination unit (1) contains each of the following switch.

- Lighting switch (2)
- Headlight leveling switch (6)
- Front fog light switch (7)
- Rear fog light switch (8)
- Illumination control switch (9)
- Interior light switch (10)

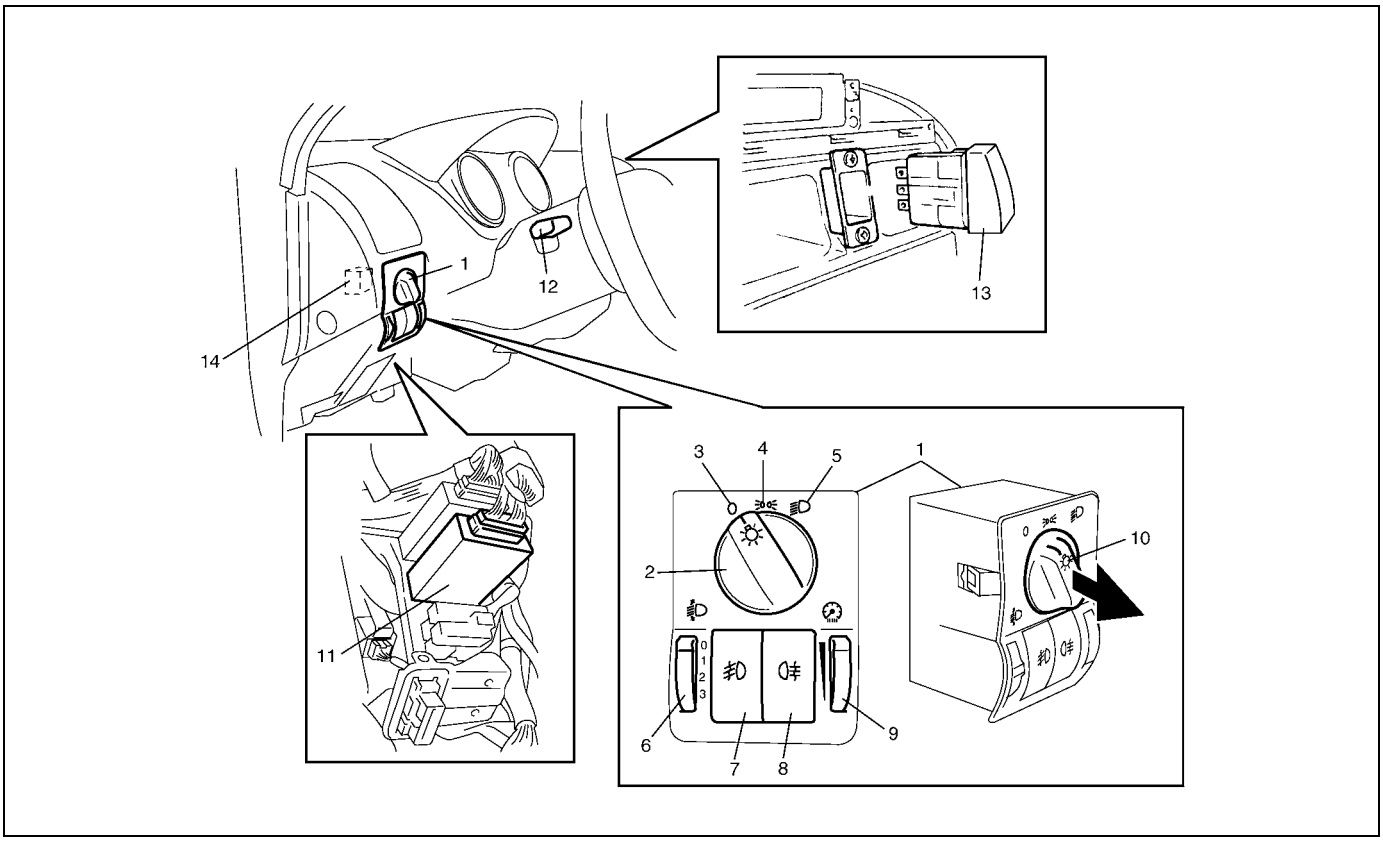

3. Lighting switch “OFF” position	12. Turn signal switch (in dimmer and passing switch)
4. Lighting switch “SMALL” position	13. Hazard warning light switch
5. Lighting switch “HEAD” position	14. Turn signal and hazard warning light relay
11. Lighting controller	

DRL System Operation Inspection

1) Apply parking brake.
2) Confirm that lighting switch is in OFF position.
3) Confirm that dimmer and passing switch is in low beam position.
4) Check the following operation.
   a) When turning ignition switch to ON, headlights do not light.
   b) When starting engine, headlights turn ON at low beam.
   c) When turning dimmer and passing switch to high beam position, headlights remain tuning ON at low beam.
   If check result is not satisfied, go to “Lighting Controller Circuit Inspection” in this section.

Lighting Controller Circuit Inspection

1) Confirm that lighting switch is in good condition referring to “Light Control Switch Combination Unit Inspection” in this section.
2) Confirm that oil pressure switch is in good condition referring to “Engine Oil Pressure Switch Inspection” in Section 8C. (If equipped with DRL system.)
3) Check that the voltage and continuity between the following terminals and body ground are as specification under each condition.
   If check result is not as specified, check relevant circuit.
   If circuit(s) is (are) normal, replace lighting controller.

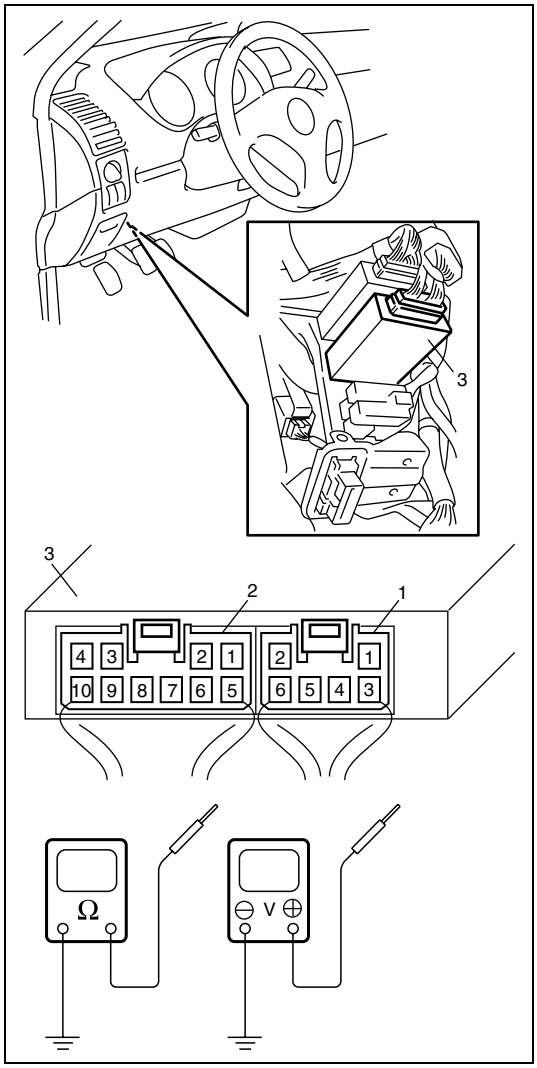

1.	Connector A
2.	Connector B
3.	Lighting controller

NOTE:

Item with the asterisk (*) is only for vehicle with the DRL system.

Terminal	Wire color	Circuit	Specification	Condition
A-1	RED/BLU	Illumination control circuit	Figure “A”	Lighting switch in positions other than OFF and illumination control switch in maximum position.
			Figure “B”	Lighting switch in positions other than OFF and illumination control switch in minimum position.
A-2	GRN/RED	Power source circuit	10 – 14 V	–
*A-3	RED/YEL	Tail light signal circuit	10 – 14 V	Lighting switch in positions other than OFF or with engine running, lighting switch in OFF position.
			Approx. 0 V	With engine stopping, lighting switch in OFF position.
A-4	YEL	Rear fog light circuit	10 – 14 V	Lighting switch in ON position and rear fog light switch pushed several times. The voltage changes between the two shown values alternately at each time the rear fog light switch is pushed.
			Approx. 0 V	
A-5	YEL/BLK	Front fog light circuit (if equipped)	10 – 14 V	Lighting switch in positions other than OFF and front fog light switch pushed several times. The voltage changes between the two shown values alternately at each time the front fog light switch is pushed.
			Approx. 0 V	
*A-6	ORN	Daytime running light (DRL) circuit	Approx. 0 V	Engine running and lighting switch in OFF position.
			10 – 14 V	Engine stopping or lighting switch in positions other then OFF.
B-1	BLK	Ground circuit	1 Ω or less	–
B-2	BRN	Rear fog light switch circuit	10 – 14 V (Non pushed)	Lighting switch in ON position and rear fog light switch pushed several times. The voltage changes between the two shown values alternately at each time the rear fog light switch is pushed.
			Approx. 0 V (Pushed)	
B-3	ORN	Illumination control switch signal circuit	Approx. 0 V	Lighting switch in positions other than OFF and illumination switch in maximum position.
			4.5 – 4.9 V	Lighting switch in positions other than OFF and illumination switch in minimum position.
B-4	–	–	–	–
*B-5	GRN/RED	Lighting switch lamp circuit	Approx. 0 V	Lighting switch in positions other than OFF or with engine running, lighting switch in OFF position.
			10 – 14 V	With engine stopping, lighting switch in OFF position.

Terminal	Wire color	Circuit	Specification	Condition
B-6	PPL	Front fog light switch circuit (if equipped)	10 – 14 V (Non pushed)	Lighting switch in positions other than OFF and front fog light switch pushed several times. The voltage changes between the two shown values alternately at each time the front fog light switch is pushed.
			Approx. 0 V (Pushed)	
*B-7	BLU	Engine oil pressure switch circuit	Approx. 0 V	Ignition switch in ON position (Engine stopping).
			10 – 14 V	Engine running.
B-8	RED/GRN	Lighting switch (dimmer position) signal circuit	Approx. 0 V	Lighting switch in OFF position.
			10 – 14 V	Lighting switch in dimmer position.
*B-9	BLU/ORN	Ignition switch signal circuit	0 V	Ignition switch in OFF position.
			10 – 14 V	Ignition switch in ON position.
B-10	RED	Lighting switch (small position) signal circuit	Approx. 0 V	Lighting switch in OFF position.
			10 – 14 V	Lighting switch in positions other than OFF.

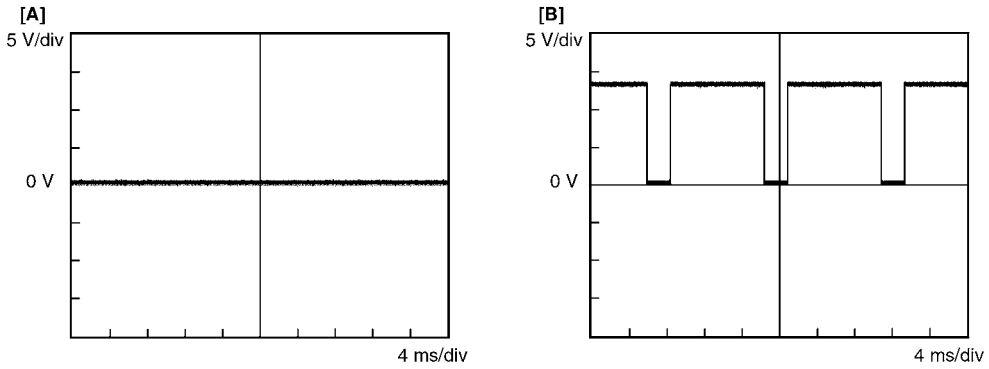

[A]: Figure “A”
[B]: Figure “B”

Light Control Switch Combination Unit Removal and Installation

REMOVAL

1) Disconnect negative (–) cable at battery.

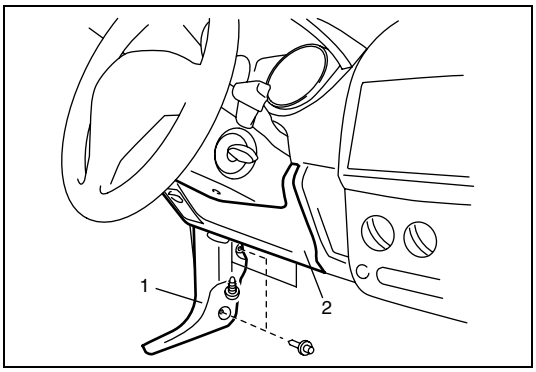

2) Remove dash side trim (1) and steering column hole cover (2).

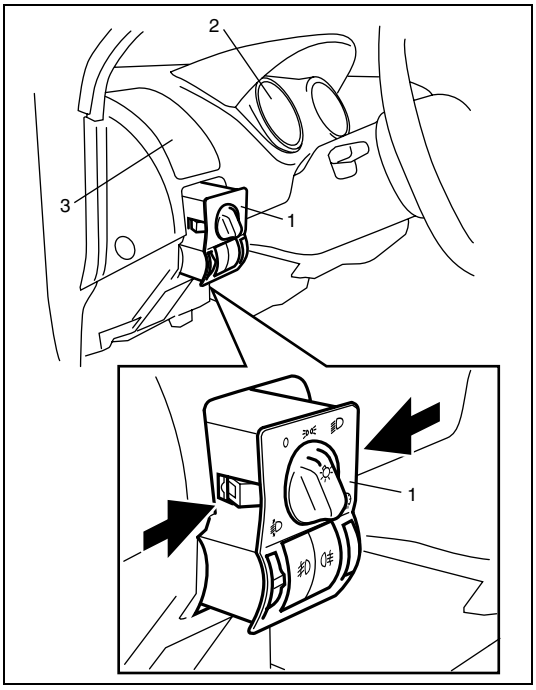

3) Remove combination meter (2) referring to “Combination Meter Removal and Installation” in this section.
4) Remove side ventilation louver (3) referring to “Side Ventilation Louver Removal and Installation” in Section 1A.
5) Remove light control switch combination unit (1) from instrument panel
6) Disconnect connector from light control switch combination unit.

INSTALLATION

Reverse removal procedure for installation.

Light Control Switch Combination Unit Inspection

Lighting switch

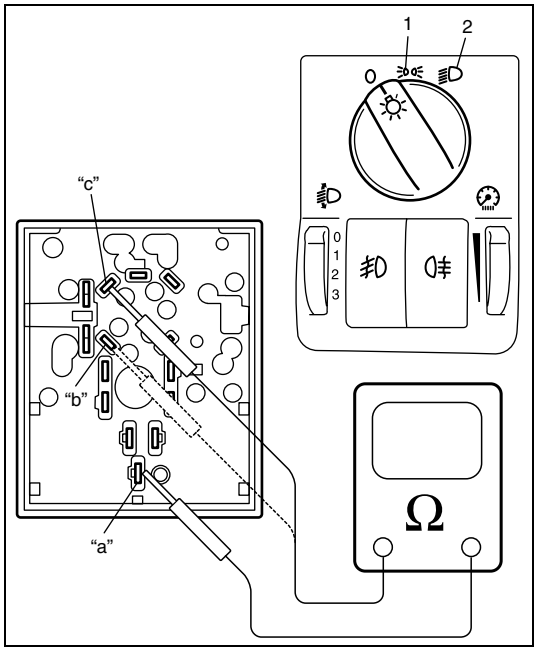

Check the continuity at each switch position. If any correct continuity is not obtained, replace light control switch combination unit.

Lighting switch specification

Switch Position \ Terminal	"a"	"b"	"c"
OFF			
SMALL (1)	○	○	
HEAD (2)	○	○	○

Headlight leveling switch

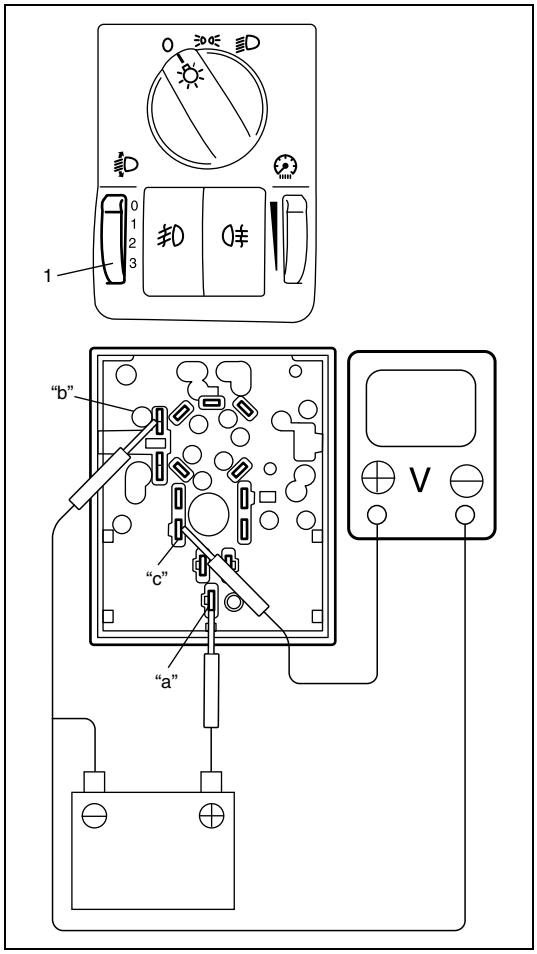

1) Connect 12 V battery positive (+) terminal to terminal "a" and battery negative (–) terminal to terminal "b".
2) Connect voltmeter positive (+) terminal to terminal "c" and voltmeter negative (–) terminal to battery negative (–) terminal.
3) Measure voltage at each position of headlight leveling switch (1).
   If any, correct voltage is not obtained, replace light control switch combination unit.

Headlight leveling switch voltage specification

NOTE:

- **Voltage values in the table are specified when battery voltage is 13.5 V.**
- **When measurement with 12 V battery, the values measured may get out of this specification slightly.**

Switch position	Voltage (V)
0	10.7 – 10.9
1	9.01 – 9.21
2	7.54 – 7.74
3	6.12 – 6.32

Front fog light switch

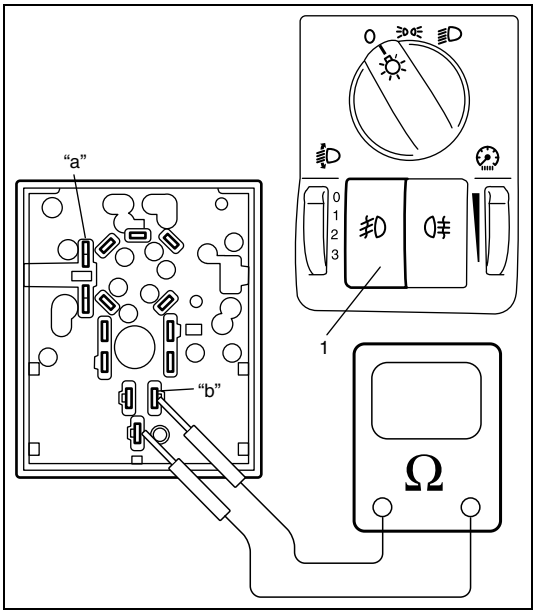

Check for continuity between the terminals "a" and "b" at each switch position.
If any correct continuity is not obtained, replace light control switch combination unit.

Front fog light switch specification

Front fog light switch (1)	Terminals "a" – "b"
Push	Continuity
Free	No continuity

Rear fog light switch

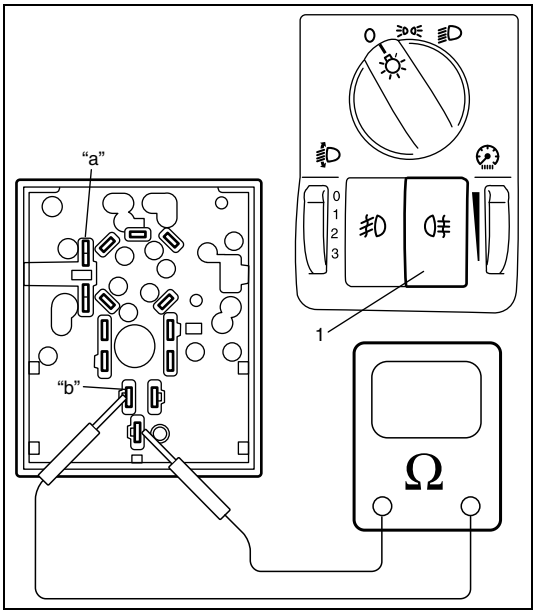

Check for continuity between the terminals "a" and "b" at each switch position.
If any correct continuity is not obtained, replace light control switch combination unit.

Rear fog light switch specification

Rear fog light switch (1)	Terminals "a" – "b"
Push	Continuity
Free	No continuity

Illumination control switch

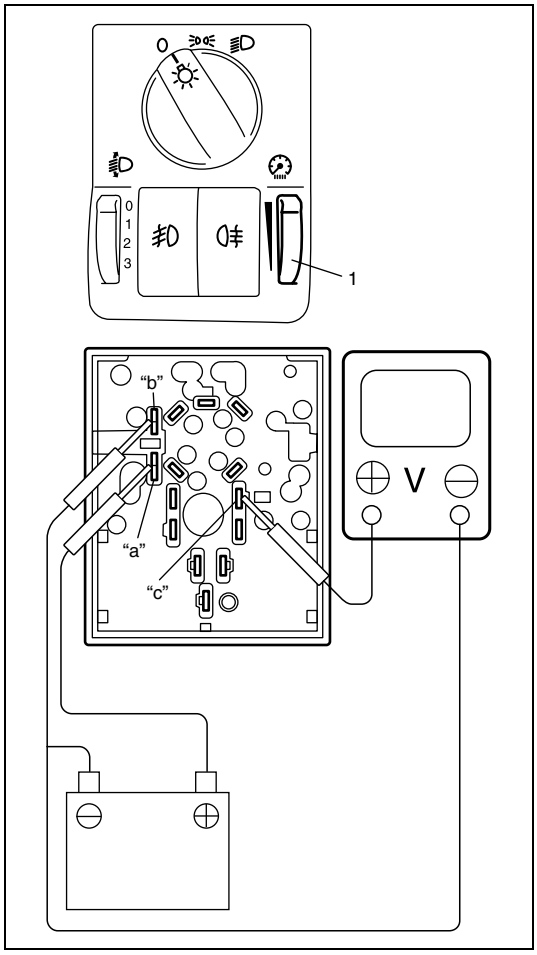

1) Connect 12V battery positive (+) terminal to terminal "a" and battery negative (–) terminal to terminal "b".
2) Connect voltmeter positive (+) terminal to terminal "c" and voltmeter negative (–) terminal to battery negative (–) terminal.
3) Measure voltage at each position of illumination control switch (1).
   If any correct voltage is not obtained, replace light control switch combination unit.

Illumination control switch specification

NOTE:

Depending on battery voltage condition, the measured values may get out of specification slightly.

Switch position	Voltage (V)
Maximum	0.1 – 0.3
Minimum	4.7 – 5.3

Interior light switch

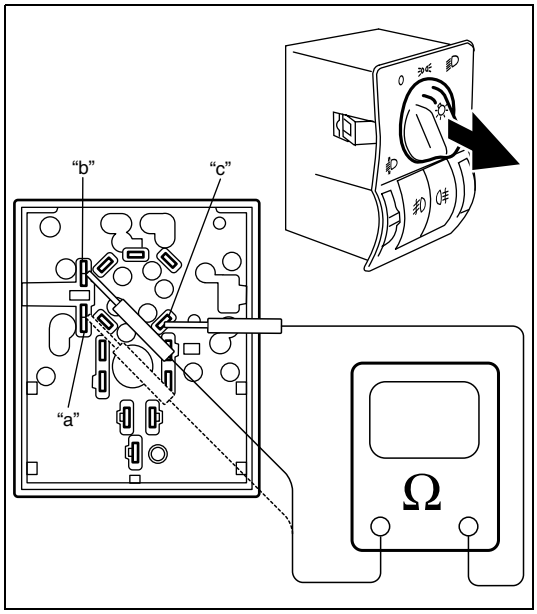

Check the continuity at each switch position.
If any correct continuity is not obtained, replace light control switch combination unit.

Interior light switch specification

Terminal / Switch Position	"a"	"b"	"c"
OFF		○	○
ON	○	○	○

Headlight Leveling Actuator On-Vehicle Inspection

1) Make sure all headlight couplers and leveling actuator couplers are correctly connected.
2) Turn the ignition switch to ON position.
3) Check if the leveling actuator sounds slightly while the leveling switch is moved.
   If no sound is heard with the movement of the leveling switch, check headlight leveling switch and wiring.
   If headlight leveling switch and wiring are OK, replace head light housing.
4) Make sure the replaced leveling actuator operates correctly after replacement.

Dimmer/Passing Switch Removal and Installation

Dimmer/passing switch is incorporated in the turn signal switch. Refer to “Turn Signal Switch Removal and Installation” in this section for removal and installation of the dimmer/passing switch.

Dimmer/Passing Switch Inspection

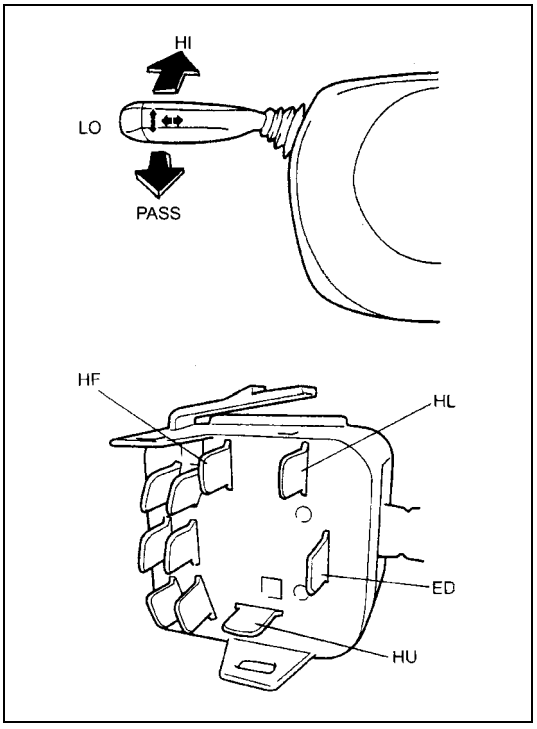

Check the continuity at each switch position. If any correct continuity is not obtained, replace turn signal switch.

Dimmer/passing switch specification

Switch Position \ Terminal	ED	HL	HU	HF
Passing (PASS)	○—○		○—○	
Low Beam (LO)	○—○			
High Beam (HI)	○		○	

Headlight Assembly Removal and Installation

REMOVAL

1) Disconnect negative (–) cable at battery.
2) Remove front bumper referring to “Front Bumper and Rear Bumper Removal and Installation” in Section 9.
3) Remove headlight mounting bolts and clip.

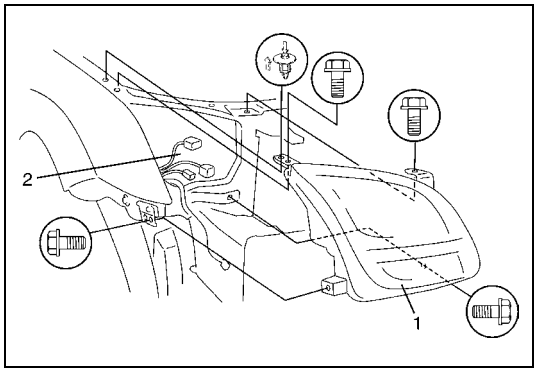

4) Detach headlight assembly (1) from vehicle.
5) Disconnect couplers (2) from headlight assembly (1).

INSTALLATION

Reverse removal procedure for installation noting the following.
After installation, be sure to inspect and adjust aiming referring to “Headlight Aiming Adjustment With Screen” in this section.

Headlight Aiming Adjustment With Screen

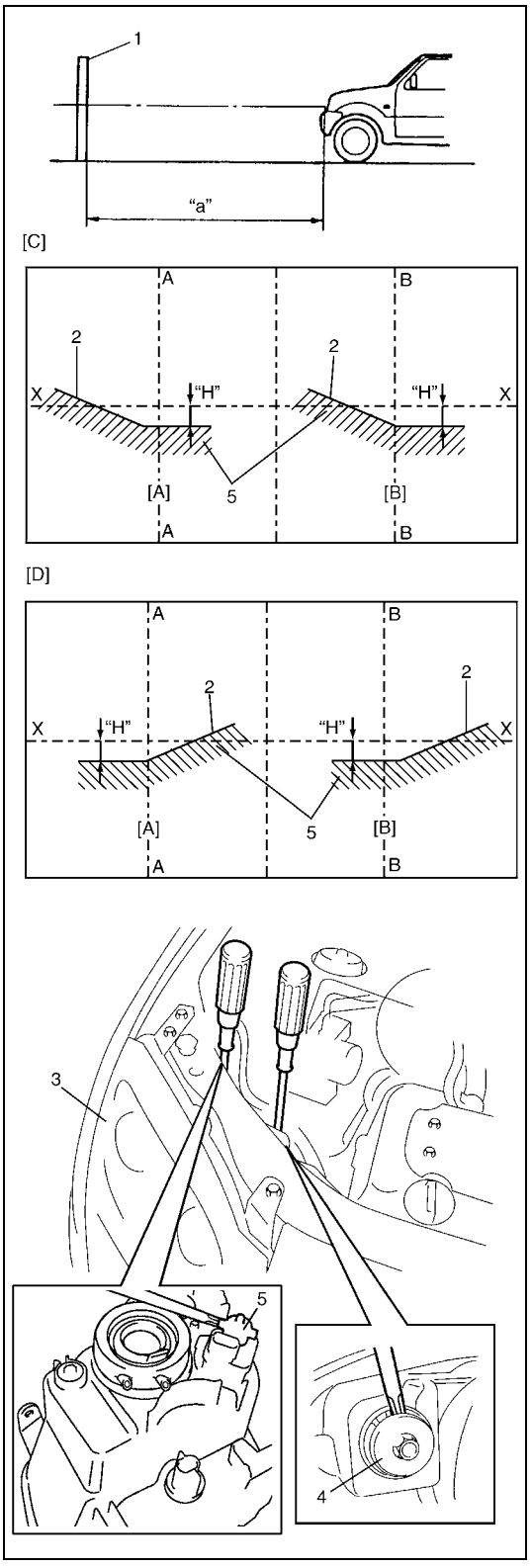

NOTE:

- **Unless otherwise obligated by local regulations, adjust headlight aiming according to the following procedure.**
- **When inspecting and adjusting headlight with leveling system, make sure to set the leveling switch to "0" position with ignition switch turned to ON.**

1) Make sure the following items.
   - Place vehicle on a flat surface in front of blank wall (screen) (1) ahead of headlight surface.

   Distance between screen and headlight
   "a": 10 m (32.8 ft.)

   - Adjust air pressure of all tires to the specified value respectively.
   - Bounce vehicle body up and down by hand to stabilize suspension.
   - Carry out aiming with a driver aboard.

   Driver's weight
   75 kg (165 lb)

2) Check to see if not spot (5) (high intensity zone) of each low beam axis falls as shown in the figure.

   Hot spot specification
   "H": Approx. 130 mm (5.15 in.)

3) Align headlight aiming to specification by adjusting aiming gear if it is not set properly.

2.	Cut line (bounding line)
3.	Heading assembly
4.	Aiming (for right/left adjustment)
5.	Aiming (headlight leveling actuator) (for up/down adjustment)
X-X:	Horizontal center line of headlights bulb
A-A:	Vertical center line of left headlight bulb
B-B:	Vertical center line of right headlight bulb
[A]:	LH headlight
[B]:	RH headlight
[C]:	RH steering vehicle shown
[D]:	LH steering vehicle shown

Headlight Bulb Replacement

WARNING:

- **Light bulbs can be hot enough to burn your finger right after being turned off. This is true especially for halogen headlight bulbs. Replace the bulbs after they become cool enough.**
- **The headlight bulbs are filled with pressurized halogen gas.**

They can burst and injure you if they are hit or dropped. Handle them carefully.

CAUTION:

The oils from your skin may cause a halogen bulb to overheat and burst when the lights are on. Grasp a new bulb with a clean cloth.

1) Disconnect negative (–) cable at battery.
2) Disconnect coupler from bulb.
3) Remove socket cover (1).
4) Replace bulb (2).
5) Reverse removal procedure for installation.

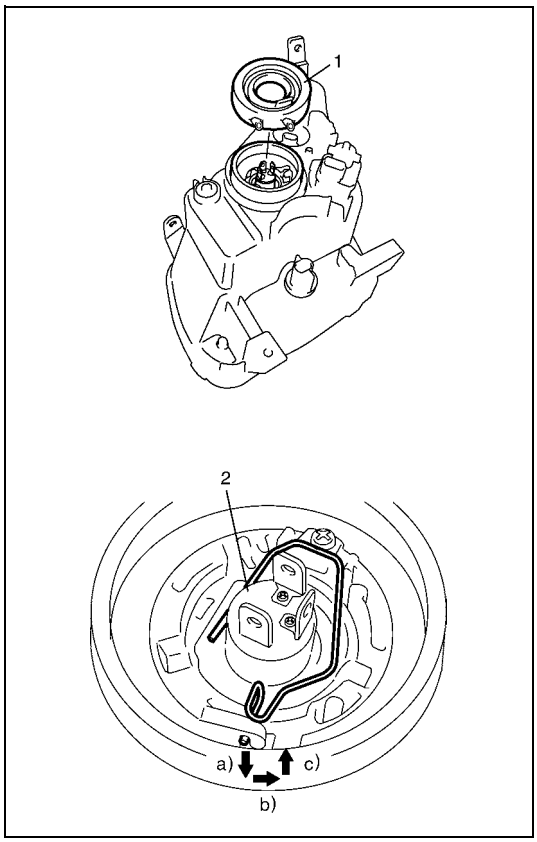

Front Fog Light Aiming Adjustment With Screen

Basic aiming

NOTE:

- **Unless otherwise obligated by local regulations, adjust front fog light aiming according to the following procedure.**
- **An example in case that the light-to-wall distance 10 m is shown in the illustration. The beam descending distance "H" is calculated when "a" is 10 m with the specification angle "b" (1.2°).**

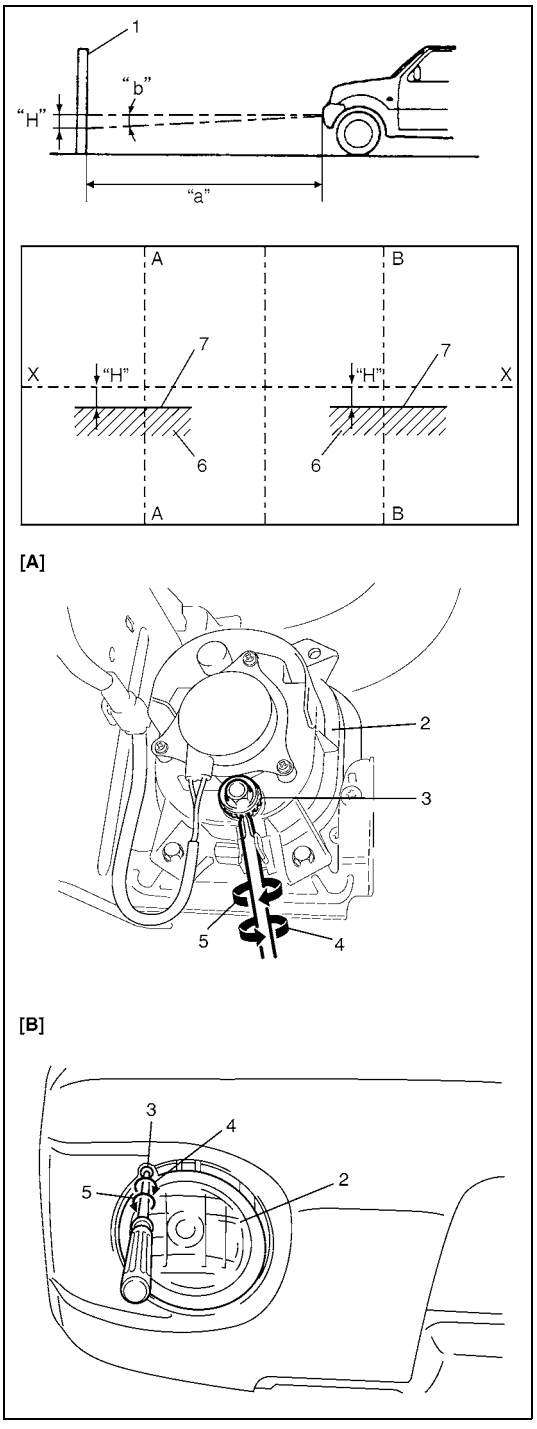

1) Make sure the following items.
   - Place vehicle on a flat surface in front of blank wall (screen) (1) ahead of front fog light surface.

   Distance between screen and front fog light
   "a": 10m (32.8ft.)

   - Adjust air pressure of all tired to the specified value respectively.
   - Bounce vehicle body up and down by hand to stabilize suspension.
   - Carry out aiming with a driver aboard.

   Driver's weight
   75 kg (165 lb)

2) Check to see if hot spot (high intensity zone) of each front fog light axis falls as shown in the figure.

   Hot spot specification
   Angle "b": 1.2° (Specification)
   Calculated distance "H": Approx. 210 mm (8.27 in.)

3) If it is not set properly, align front fog light to specification by rotating aiming gear.

2.	Front fog light assembly
3.	Aiming gear
4.	Aiming (for up adjustment)
5.	Aiming (for down adjustment)
6.	Hot spot
7.	Bounding line
X-X:	Horizontal center line of front fog light bulb
A-A:	Vertical center line of left front fog light bulb
B-B:	Vertical center line of right front fog light bulb
[A]:	Gear adjuster type
[B]:	Screw adjuster type

Turn Signal Switch Removal and Installation

REMOVAL

1) Disconnect negative (–) cable at battery.

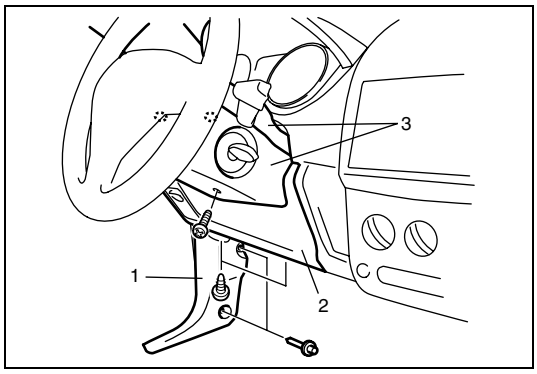

2) Remove dash side trim (1), steering column hole cover (2) and steering column covers (3).

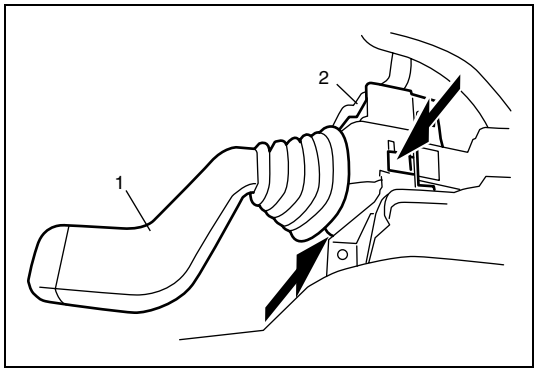

3) Remove turn signal switch (1) while releasing the locks.
4) Disconnect turn signal switch connector (2).

INSTALLATION

Reverse removal procedure for installation.

Turn Signal Switch Inspection

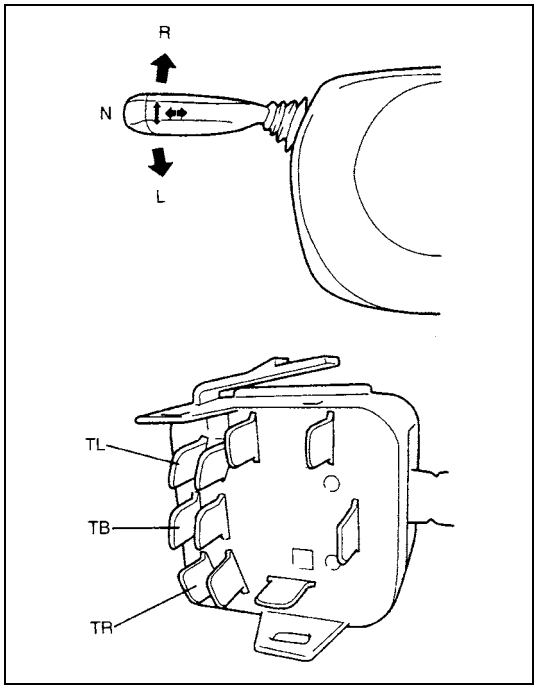

Check the continuity at each switch position. If any correct continuity is not obtained, replace turn signal switch.

Turn signal switch specification

Terminal / Switch Position	TL	TB	TR
L	○—○		
N			
R		○—○	

Hazard Warning Light Switch Removal and Installation

REMOVAL

1) Disconnect negative (–) cable at battery.
2) Remove audio unit (if equipped) and center upper garnish referring to Step2) to 3) of "Information Display Removal and Installation" in Section 8D.

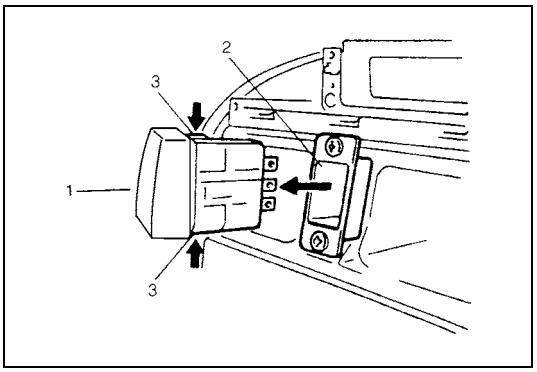

3) Remove hazard warning light switch (1) from switch case (2) while releasing the locks (3)

INSTALLATION

Reverse removal procedure for installation.

Hazard Warning Light Switch Inspection

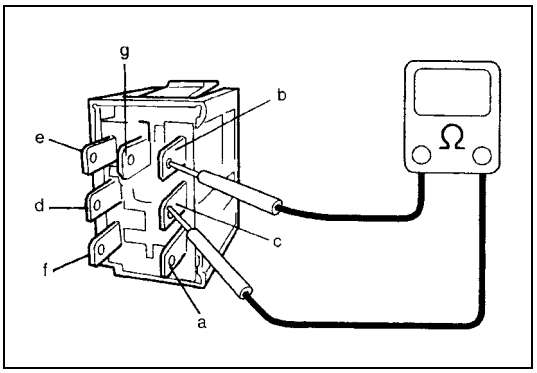

Check the continuity of each switch position.
If any correct continuity is not obtained, replace hazard warning light switch.

Hazard warning light switch specification

Terminal / Hazard Switch	a	b	c	d	e	f	g
OFF	○	○			∿	⊘	○
ON		○	○	○	○	○⊘○	

Turn Signal and Hazard Warning Light Relay Removal and Installation

REMOVAL

1) Disconnect negative (–) cable at battery.

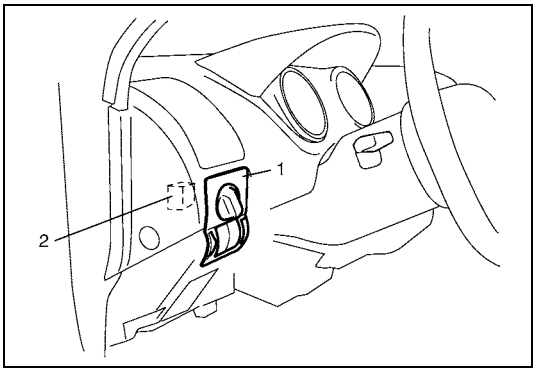

2) Remove light control switch combination unit (1) referring to "Light Control Switch Combination Unit Removal and Installation" in this section.
3) Remove turn signal and hazard warning light relay (2).

INSTALLATION

Reverse removal procedure for installation.

Turn Signal and Hazard Warning Light Relay Inspection

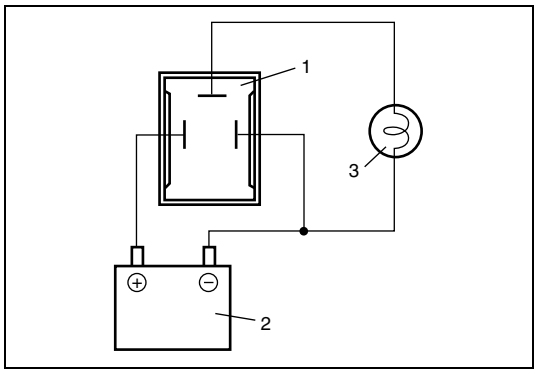

1) Connect turn signal and hazard warning light relay (1), battery (2) and test bulb (12 V, 48 W) (3) as shown.
2) Unless a continued flash on and off is visible, replace turn signal and hazard warning light relay.

Turn signal and hazard warning light relay flashing cycle specification
60 – 120 cycle/minute

SECTION 8C

INSTRUMENTATION/DRIVER INFORMATION

WARNING:

For vehicles equipped with Supplemental Restraint (Air Bag) System:

- **Service on and around the air bag system components or wiring must be performed only by an authorized SUZUKI dealer. Refer to "System Components and Wiring Location View" under "General Description" in air bag system section in order to confirm whether you are performing service on or near the air bag system components or wiring. Please observe all WARNINGS and "Service Precautions" under "On-Vehicle Service" in air bag system section before performing service on or around the air bag system components or wiring. Failure to follow WARNINGS could result in unintentional activation of the system or could render the system inoperative. Either of these two conditions may result in severe injury.**
- **Technical service work must be started at least 90 seconds after the ignition switch is turned to the "LOCK" position and the negative cable is disconnected from the battery. Otherwise, the system may be activated by reserve energy in the Sensing and Diagnostic Module (SDM).**

CONTENTS

Diagnosis 8C-2
- Speedometer and VSS Symptom Diagnosis 8C-2
- Fuel Meter and Fuel Gauge Unit Symptom Diagnosis 8C-2
- Engine Coolant Temperature (ECT) Gauge and ECT Sensor Symptom Diagnosis 8C-2
- Engine Oil Pressure Warning Light Symptom Diagnosis 8C-3
- Brake System Warning Light (Parking Brake Indicator, Brake Fluid Warning and EBD System Warning Light) 8C-3
- Ignition Key Remainder and Light Remainder Warning Buzzer Symptom Diagnosis 8C-4

On-Vehicle Service 8C-4
- Cautions in Body Electrical System Servicing 8C-4
- Ignition (Main) Switch ON-Vehicle Inspection 8C-4
- Ignition (Main) Switch Removal and Installation 8C-5
- Combination Meter Circuit 8C-6
- Combination Meter Removal and Installation 8C-8
- Fuel Gauge Inspection 8C-9
- Fuel Level Sensor (Gauge Unit) Removal and Installation 8C-9
- Fuel Level Sensor (Gauge Unit) Inspection 8C-10
- VSS Removal and Installation 8C-10
- VSS Inspection 8C-10
- Engine Coolant Temperature (ECT) Gauge Inspection 8C-11
  - Operation check 8C-11
- ECT sensor Removal and Installation 8C-11
- ECT Sensor Inspection 8C-11
- Ignition Key Remainder and Light Remainder Warning Buzzer Inspection 8C-12
- Engine Oil Pressure Switch Inspection 8C-12
- Engine Oil Pressure Switch Removal and Installation 8C-12
- Brake Fluid Level Switch Inspection 8C-13
- Parking Brake Switch Inspection 8C-13

Diagnosis

Speedometer and VSS Symptom Diagnosis

Condition	Possible Cause	Correction
Speedometer shows no operation or incorrect operation	Fuse blown	Replace fuse to check for short.
	Wiring or grounding faulty	Repair circuit.
	Vehicle speed sensor (VSS) faulty	Check vehicle speed sensor referring to “Vehicle speed sensor (VSS) inspection” in Section 6.
	Combination meter faulty	Check combination meter circuit referring to “Combination Meter Circuit” in this section.
	Vehicle speed sensor (VSS) signal rotor faulty	Check vehicle speed sensor referring to “Vehicle speed sensor (VSS) inspection” in Section 6.

Fuel Meter and Fuel Gauge Unit Symptom Diagnosis

Condition	Possible Cause	Correction
Fuel meter shows no operation	Fuse blown	Replace fuse to check for short.
	Wiring or grounding faulty	Repair circuit
	Fuel gauge unit faulty	Check fuel gauge unit referring to “Fuel Level Sensor (Gauge Unit) Inspection” in this section.
	Combination meter faulty	Check combination meter circuit referring to “Fuel Gauge Inspection” in this section.

Engine Coolant Temperature (ECT) Gauge and ECT Sensor Symptom Diagnosis

Condition	Possible Cause	Correction
Engine coolant temperature meter shows no operation or incorrect operation	Fuse blown	Replace fuse to check for short.
	Wiring or grounding faulty	Repair circuit.
	ECT sensor faulty	Check ECT sensor referring to “Engine coolant temperature sensor (ECT sensor) inspection” in Section 6E1.
	Combination meter faulty	Check combination meter circuit referring to “Engine Coolant Temperature (ECT) Gauge Inspection” in this section.

Engine Oil Pressure Warning Light Symptom Diagnosis

Condition	Possible Cause	Correction
Engine oil pressure warning light does not light up when turning the ignition switch to ON position at engine OFF	Fuse blown	Replace fuse to check for short.
	Wiring or grounding faulty	Repair circuit.
	Engine oil pressure switch faulty	Check engine oil pressure switch referring to “Engine Oil Pressure Switch Inspection” in this section.
	Combination meter faulty	Check combination meter circuit referring to “Combination Meter Circuit” in this section.
Engine oil pressure warning light stays ON	Wiring faulty	Repair circuit.
	Engine oil pressure switch faulty	Check engine oil pressure switch referring to “Engine Oil Pressure Switch Inspection” in this section.

Brake System Warning Light (Parking Brake Indicator, Brake Fluid Warning and EBD System Warning Light)

Condition	Possible Cause	Correction
Brake system warning light does not light up (when fluid low level and/or parking brake pulled up)	Fuse blown	Replace fuse to check for short.
	Wiring or grounding faulty	Repair circuit.
	Brake fluid level switch faulty	Check brake fluid switch referring to “Brake Fluid Level Switch Inspection” in this section.
	Parking brake switch faulty	Check parking brake switch referring to “Parking Brake Switch Inspection” in this section.
Brake system warning light does not light up when cranking (when in turned position)	Wiring or grounding faulty	Repair circuit.
	Ignition switch faulty	Check ignition switch referring to “Ignition (Main) Switch ON-Vehicle Inspection” in this section.
	Combination meter faulty	Check combination meter circuit referring to “Combination Meter Circuit” in this section.
Brake system warning light stays ON	Wiring or grounding faulty	Repair circuit.
	Brake fluid level faulty	Check brake fluid level.
	Brake fluid level switch faulty	Check brake fluid switch referring to “Brake Fluid Level Switch Inspection” in this section.
	Parking brake switch faulty	Check parking brake switch referring to “Parking Brake Switch Inspection” in this section.
	ABS control module faulty	Check ABS control module referring to “Table – D EBD Warning Lamp (Brake Warning Lamp) Check – Lamp Comes “ON” Steady” in Section 5E.

Ignition Key Remainder and Light Remainder Warning Buzzer Symptom Diagnosis

Condition	Possible Cause	Correction
Ignition key remainder and light remainder warning buzzer show no sounding	Wiring or grounding faulty	Repair circuit.
	Driver side door switch faulty	Check door switch referring to "Door Switch Inspection" in this section.
	Ignition switch faulty	Check ignition switch referring to "Ignition (Main) Switch ON-Vehicle Inspection" in this section.

On-Vehicle Service

Cautions in Body Electrical System Servicing

Refer to "Cautions in Body Electrical System Servicing" in Section 8B.

Ignition (Main) Switch ON-Vehicle Inspection

1) Disconnect negative cable at battery.

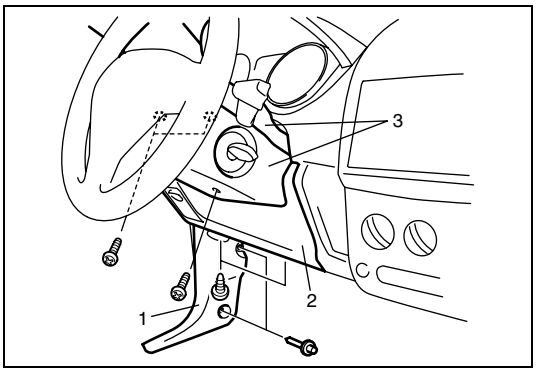

2) Remove dash side trim (1), steering hole cover (2) and steering column covers (3).

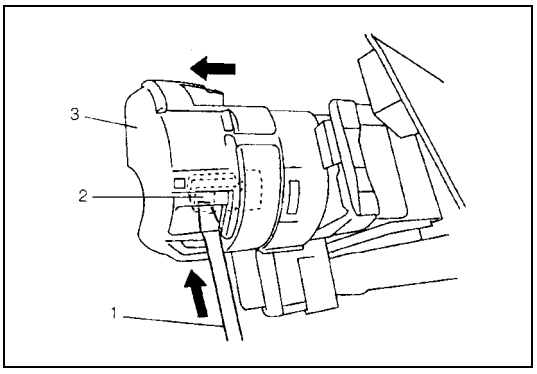

3) Disconnect ignition (main) switch coupler as follows.
   a) Turn ignition switch key to "ACC" position.
   b) Insert screw driver (1) in coupler hole.
   c) Unlock coupler lock (2) and hold it by pushing it in arrow direction with screw driver (1).
   d) With coupler lock unlocked, disconnect coupler (3).

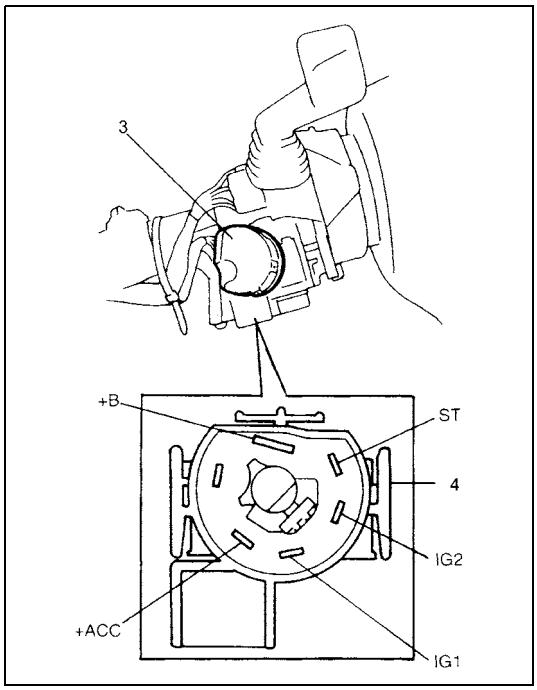

4) Check continuity between terminals at each switch position. If continuity is not obtained according to the table, replace ignition (main) switch (4).

Ignition (main) switch specification

Key \ Terminal / Position		+B	+ACC	IG1	IG2	ST
OUT	LOCK	○				
IN	ACC	○	○			
	ON	○	○	○	○	
	START	○	○	○		○

Ignition (Main) Switch Removal and Installation

Refer to “Steering Column Removal and Installation” in Section 3C.

Combination Meter Circuit

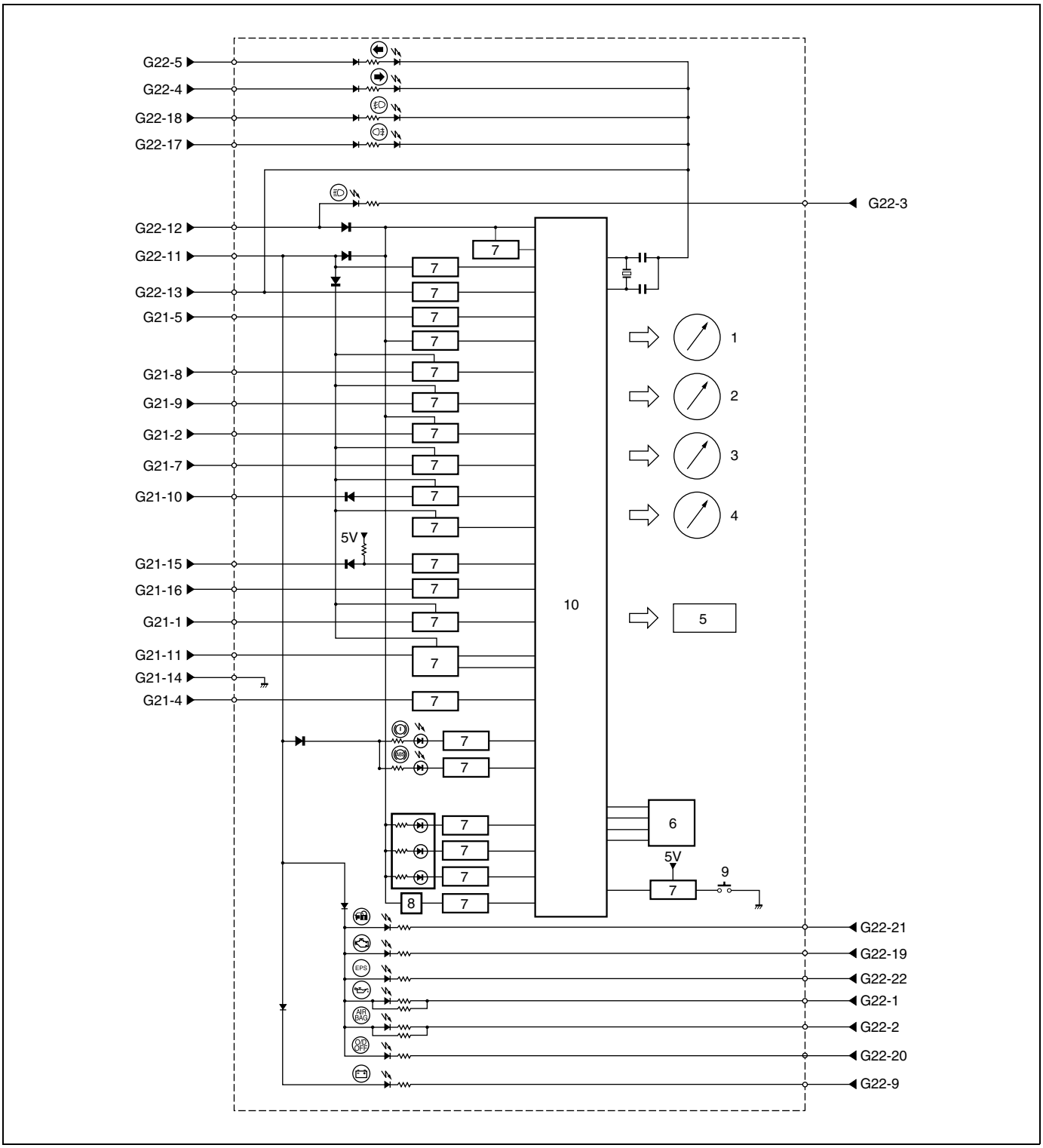

1. Speedometer	4. Engine coolant temperature gauge	7. Interface	10. CPU
2. Tachometer	5. ODO-TRIP	8. Buzzer	
3. Fuel gauge	6. EEPROM	9. Trip switch	

Terminal G21	Wire Color	Circuit
G21-1	GRY	To ECM (Engine coolant temperature meter signal)
G21-2	BLK/YEL	To door switch
G21-3	–	–
G21-4	ORN	To lighting switch (illumination control signal)
G21-5	WHT/BLK	To “ACC” fuse (key remainder signal)
G21-6	–	–
G21-7	PNK/BLU	To ABS control module (EBD warning indicator control signal)
G21-8	RED/BLU	To ABS control module (ABS indicator control signal)
G21-9	RED/BLU	To brake fluid level switch
G21-10	YEL/GRN	To parking brake switch
G21-11	YEL/RED	To fuel level gauge
G21-12	–	–
G21-13	–	–
G21-14	RED/YEL	To lighting switch
G21-15	PPL	To VSS (Speedometer signal)
G21-16	BRN	To ECM (Tachometer signal)
G21-17	–	–
G21-18	–	–
G21-19	–	–
G21-20	–	–
G21-21	–	–
G21-22	–	–

Terminal G22	Wire Color	Circuit
G22-1	BLU	To oil pressure switch
G22-2	YEL/RED	To SDM (AIR BAG indicator control signal)
G22-3	RED	To combination switch (High beam indicator control signal)
G22-4	BLU/YEL	To combination switch (Turn R signal indicator control signal)
G22-5	GRN/RED	To combination switch (Turn L signal indicator control signal)
G22-6	–	–
G22-7	–	–
G22-8	–	–
G22-9	WHT/BLU	To generator (charge warning indicator control signal)
G22-10	–	–
G22-11	BLU/ORN	To “METER” fuse (ignition ON signal)
G22-12	WHT/RED	To “RADIO DOME” fuse (power supply)
G22-13	BLK	To body ground
G22-14	BLK/ORN	To engine ground
G22-15	–	–
G22-16	–	–
G22-17	YEL	To lighting switch (rear fog lap indicator control signal)
G22-18	LT GRN	To lighting switch (front fog lamp indicator control signal)
G22-19	PPL/WHT	To ECM (MIL indicator control signal)
G22-20	RED/BLK	To TCM (O/D OFF indicator control signal) (if equipped)
G22-21	LT GRN/BLK	To ECM (Immobilizer indicator control signal)
G22-22	PNK	To EPS control module (EPS indicator control signal)

Terminal arrangement of combination meter connector viewed from harness side

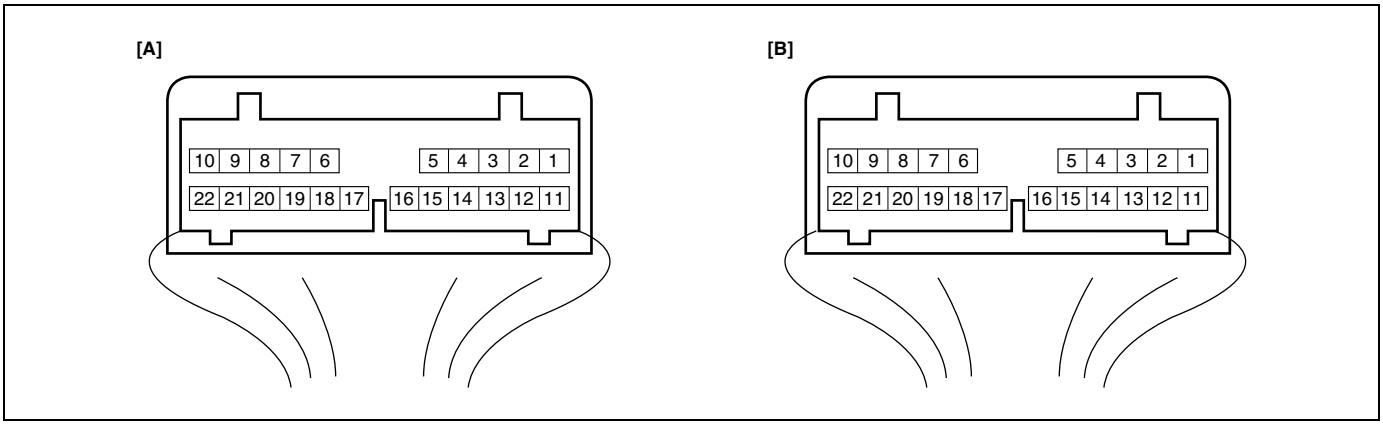

[A]: Connector “G21” (Green)
[B]: Connector “G22” (Light blue)

Combination Meter Removal and Installation

REMOVAL

1) Disconnect negative (–) cable at battery.
2) Remove instrument cluster panel (1).
3) Remove meter cluster panel (2) and combination meter (3).
4) Disconnect all couplers from combination meter.

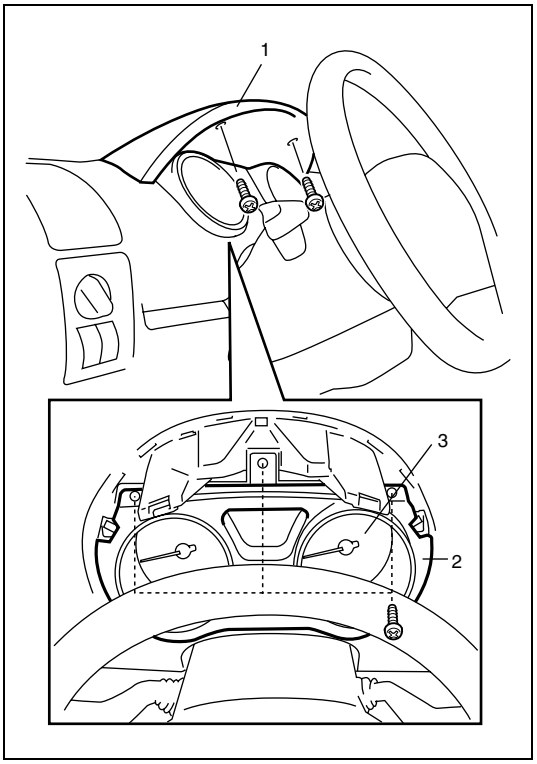

INSTALLATION

Reverse removal procedure for installation.

Fuel Gauge Inspection

NOTE:

Make sure that all related connector terminals are in good contact condition before combination meter inspection.

1) Remove combination meter referring to “Combination Meter Removal and Installation” in this section.
2) Connect combination meter connectors to combination meter.

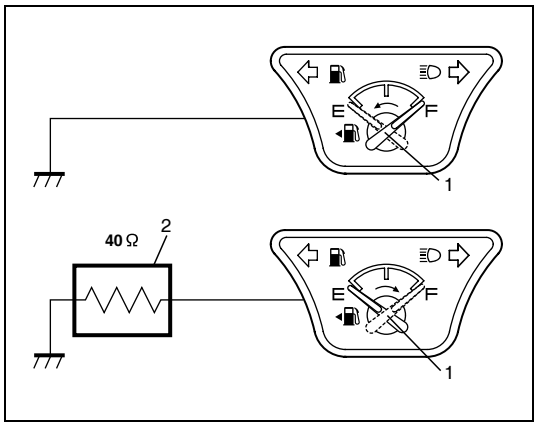

3) Short “YEL/RED” wire terminal of combination meter connector to body ground as shown.
4) Turn ignition switch to ON position, and check that meter pointer (1) of fuel level gauge indicates “E” and low fuel warning light turns on.
5) Turn ignition switch to OFF position.
6) Short “YEL/RED” wire terminal of combination meter connector to body ground through a resister (40Ω) (2) as shown.
7) Turn ignition switch to ON position, and check that meter pointer (1) of fuel level gauge indicates “F”.
   If check result is not satisfied, replace combination meter.

Fuel Level Sensor (Gauge Unit) Removal and Installation

Remove fuel pump assembly referring to “Fuel Pump Assembly Removal and Installation” in Section 6C.

Fuel Level Sensor (Gauge Unit) Inspection

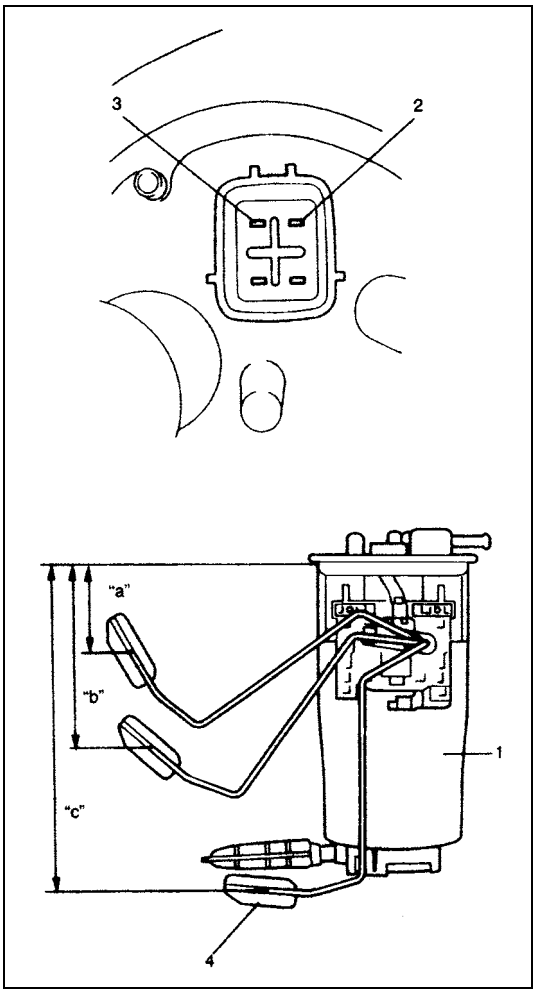

- Check that resistance between terminals “2” and “3” of fuel level sensor changes with change of float position.
- Check resistance between terminals “2” and “3” in each float position.
  If the measured value is out of specification, replace fuel level sensor.

Fuel level sensor specification

Float Position		Resistance (Ω)
Full Upper “a”	56 mm (2.20 in.)	38 – 42
Middle (1/2) “b”	119.2 mm (4.69 in.)	157 – 163
Full Lower “c”	200.5 mm (7.89 in.)	276 – 284

1. Fuel pump assembly

VSS Removal and Installation

Refer to “Vehicle speed sensor (VSS) removal and installation” in Section 6E1.

VSS Inspection

Refer to “Vehicle speed sensor (VSS) inspection” in Section 6E1.

Engine Coolant Temperature (ECT) Gauge Inspection

Operation check

NOTE:

Make sure that all related connector terminals are in good contact condition before combination meter inspection.

1) Confirm that DTC P0117 and/or DTC P0118 are not detected.
   If it is detected, go to each diagnostic flow table.
2) Turn ignition switch to OFF position.
3) Remove combination meter referring to “Combination Meter Removal and Installation” in this section.
4) Confirm that there is no abnormal point in “GRY” wire of combination meter harness.
5) Confirm that there are no abnormal point in power and ground wire circuit of combination meter harness.
6) Connect combination meter connectors from combination meter.
7) Connect oscilloscope between terminals “GRY” and “BLK” wire of combination meter connector.
8) Turn ignition switch to ON position.

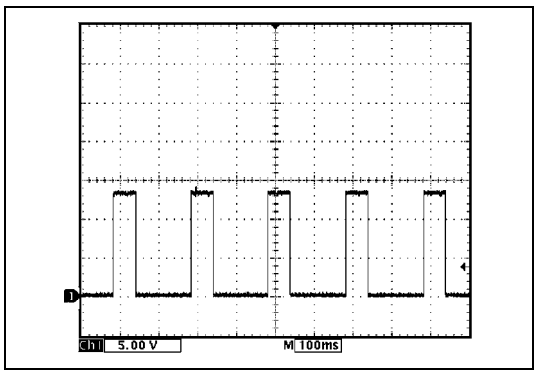

9) Check that there is waveform from ECM to engine coolant temperature meter.
   If check result is satisfied, replace combination meter.
   If check result is not satisfied, substitute a known-good ECM and recheck.

ECT sensor Removal and Installation

Refer to “Engine coolant temperature sensor (ECT sensor) removal and installation” in Section 6E1.

ECT Sensor Inspection

Refer to “Engine coolant temperature sensor (ECT sensor) inspection” in Section 6E1.

Ignition Key Remainder and Light Remainder Warning Buzzer Inspection

The ignition key and light remainder warning buzzer is integrated in combination meter.
Therefore, check the buzzer circuit referring to “Combination Meter Circuit” in this section.
If no failure is found, repair wiring harness. If a failure is found in the buzzer circuit, replace combination meter.

Engine Oil Pressure Switch Inspection

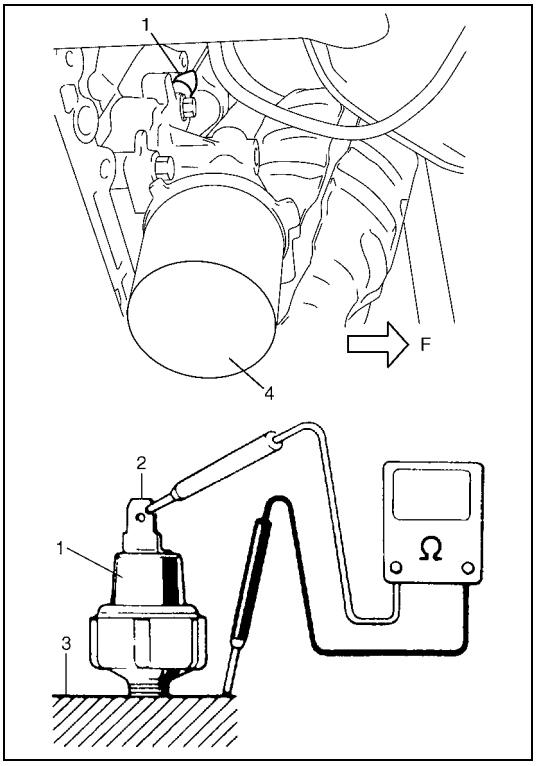

1) Disconnect engine oil pressure switch (1) lead wire.
2) Check for continuity between engine oil pressure switch terminal (2) and cylinder block (3) as shown in the figure.
   If not as specified, replace engine oil pressure switch (1).

Engine oil pressure switch specification
During engine running: No continuity
At engine stop: Continuity

4.	Engine oil filter
F.	Front

Engine Oil Pressure Switch Removal and Installation

Refer to “Oil Pressure Check” in Section 6A1.

Brake Fluid Level Switch Inspection

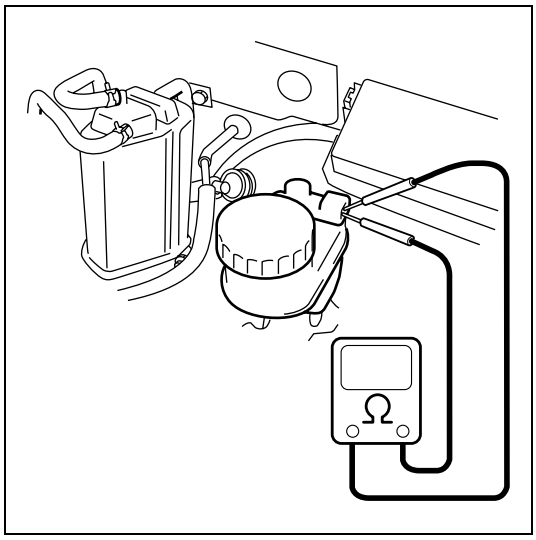

Check for continuity between terminals of brake fluid level switch.
If found defective, replace master cylinder reservoir.

Brake fluid level switch specification
OFF position (float up): No continuity
ON position (float down): Continuity

Parking Brake Switch Inspection

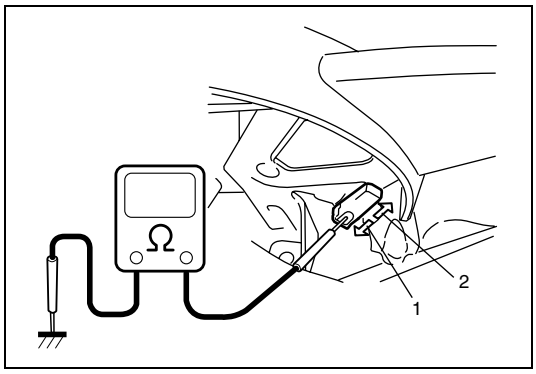

Check for continuity between parking brake switch terminal and body ground.
If found defective, replace parking brake switch.

Parking brake switch specification
OFF position (parking brake released) (1):
No continuity
ON position (parking brake lever pulled up) (2):
Continuity

SECTION 8D

WINDOWS, MIRRORS, SECURITY AND LOCKS

WARNING:

For vehicles equipped with Supplemental Restraint (Air Bag) System:

- **Service on and around the air bag system components or wiring must be performed only by an authorized SUZUKI dealer. Refer to "System Components and Wiring Location View" under "General Description" in air bag system section in order to confirm whether you are performing service on or near the air bag system components or wiring. Please observe all WARNINGS and "Service Precautions" under "On-Vehicle Service" in air bag system section before performing service on or around the air bag system components or wiring. Failure to follow WARNINGS could result in unintentional activation of the system or could render the system inoperative. Either of these two conditions may result in severe injury.**
- **Technical service work must be started at least 90 seconds after the ignition switch is turned to the "LOCK" position and the negative cable is disconnected from the battery. Otherwise, the system may be activated by reserve energy in the Sensing and Diagnostic Module (SDM).**

CONTENTS

Diagnosis 8D-3
- Rear Window Defogger Symptom Diagnosis 8D-3
- Front Wiper and Washer Symptom Diagnosis 8D-3
- Rear Wiper and Washer (If Equipped) Symptom Diagnosis 8D-4
- Power Window Control System (If Equipped) Symptom Diagnosis 8D-5
- Power Door Lock System (If Equipped) Symptom Diagnosis 8D-5
- Keyless Entry System (If Equipped) Symptom Diagnosis 8D-6
- Power Door Mirror Control System (If Equipped) Symptom Diagnosis 8D-6
- Door Mirror Heater (If Equipped) Symptom Diagnosis 8D-7
- Front Seat Heater (If Equipped) Symptom Diagnosis 8D-7
- Information Display Unit Symptom Diagnosis 8D-8

On-Vehicle Service 8D-9
- Cautions in Body Electrical System Servicing 8D-9
- Rear Window Defogger Switch Inspection 8D-9
- Rear Window Defogger Wire Inspection 8D-9
- Rear Window Defogger Wire Repair 8D-10
- Wipers and Washers Components 8D-11
- Wiper and Washer Switch Removal and Installation 8D-12
- Wiper and Washer Switch Inspection 8D-13
- Wiper Circuit Inspection 8D-14
  - Front wiper auto stop circuit 8D-14
  - Front wiper intermittent circuit 8D-15
  - Front washer linked circuit 8D-16
  - Rear wiper auto stop circuit 8D-17
  - Rear wiper intermittent circuit 8D-18
  - Rear washer linked circuit 8D-19
- Washer Tank and Washer Pump Removal and Installation 8D-20
- Washer Pump Inspection 8D-20
- Front Wiper Motor Inspection 8D-20
- Rear Wiper Motor Inspection 8D-21
- Power Window Main Switch Inspection 8D-22
- Power Window Sub Switch Inspection 8D-23
- Stop Lamp (Brake) Switch Inspection 8D-23
- Power Door Lock System Component Location 8D-24
- Power Door Lock System Operation Inspection 8D-24
- Power Door Lock System Circuit Inspection 8D-25
  - Power door lock system circuit check 8D-26
- Power Door Lock Switch Inspection 8D-27
- Key Cylinder Switch Inspection 8D-28
- Door Lock Actuator Inspection 8D-29
- Door Switch Inspection 8D-29
- Power Door Lock System With Keyless Entry System Component Location 8D-30
- System Description 8D-30
- Change of Signal Mode 8D-31

Keyless Entry System Operation Inspection 8D-32
Keyless Entry System Circuit Inspection 8D-33
Replacement of Transmitter Battery 8D-34
Transmitter Code Registration Procedure 8D-35
Power Door Mirror Switch Inspection 8D-35
Power Door Mirror Actuator Removal and Installation 8D-36
Power Door Mirror Actuator Inspection 8D-36
Door Mirror Heater Switch Inspection 8D-37
Mirror Heater Inspection 8D-37
Seat Heater System Inspection 8D-37
Seat heater switch 8D-37
Seat back 8D-38
Seat cushion 8D-38
Relay switching/heater circuit function 8D-39
Bimetal/relay operation 8D-39
Information Display Removal and Installation 8D-40
Outside Air Temperature Sensor Removal and Installation 8D-41
Outside Air Temperature Sensor Inspection 8D-41

Diagnosis

Rear Window Defogger Symptom Diagnosis

Condition	Possible Cause	Correction
Rear defogger does not operate	Fuse blown	Replace fuse to check for short.
	Wiring or grounding faulty	Repair circuit.
	Rear window defogger wire faulty	Check rear window defogger wire referring to “Rear Window Defogger Wire Inspection” in this section.
	Rear window defogger switch faulty	Check rear window defogger switch referring to “Rear Window Defogger Switch Inspection” in this section.

Front Wiper and Washer Symptom Diagnosis

Condition	Possible Cause	Correction
Front wipers do not operate or move at a specified speed	Fuse blown	Replace fuse to check for short.
	Wiring or grounding faulty	Repair circuit.
	Front wiper motor faulty	Check front wiper motor referring to “Front Wiper Motor Inspection” in this section.
	Wiper and washer switch faulty	Check wiper and washer switch referring to “Wiper and Washer Switch Inspection” in this section.
Front wipers do not return to original position	Loose installation of wiper arms	Reinstall wiper arms correctly.
	Wiring or grounding faulty	Repair circuit.
	Wiper and washer switch faulty	Check wiper and washer switch referring to “Wiper and Washer Switch Inspection” in this section.
	Front wiper motor faulty	Check front wiper motor referring to “Front Wiper Motor Inspection” in this section.
	Front wiper intermittent timer faulty	Check front wiper auto stop circuit referring to “Wiper Circuit Inspection” in this section.
Only front wiper intermittent wiper function does not operate	Wiring or grounding faulty	Repair circuit.
	Wiper and washer switch faulty	Check wiper and washer switch referring to “Wiper and Washer Switch Inspection” in this section.
	Front wiper intermittent timer faulty	Check front wiper intermittent circuit referring to “Wiper Circuit Inspection” in this section.

Condition	Possible Cause	Correction
Neither washer nor wiper operate when washer switch is in ON	Washer hose or nozzle clogged	Repair hose or nozzle
	Wiring or grounding faulty	Repair circuit.
	Washer pump faulty	Check washer motor referring to “Washer Pump Inspection” in this section.
	Wiper and washer switch faulty	Check wiper and washer switch referring to “Wiper and Washer Switch Inspection” in this section.
	Front wiper intermittent timer faulty	Check front washer linked circuit referring to “Wiper Circuit Inspection” in this section.

Rear Wiper and Washer (If Equipped) Symptom Diagnosis

Condition	Possible Cause	Correction
Rear wiper does not operate or does not return to original position	Loose installation of wiper arm	Reinstall wiper arm correctly.
	Wiring or grounding faulty	Repair circuit.
	Fuse blown	Replace fuse to check for short.
	Wiper and washer switch faulty	Check wiper and washer switch referring to “Wiper and Washer Switch Inspection” in this section.
	Rear wiper motor faulty	Check rear wiper motor referring to “Rear Wiper Motor Inspection” in this section.
	Rear wiper intermittent timer faulty	Check rear wiper auto stop circuit or rear wiper intermittent circuit referring to “Wiper Circuit Inspection” in this section.
Rear washer malfunction	Washer hose or nozzle clogged	Repair hose or nozzle.
	Wiring or grounding faulty	Repair circuit.
	Washer pump faulty	Check washer motor referring to “Washer Pump Inspection” in this section.
	Wiper and washer switch faulty	Check wiper and washer switch referring to “Wiper and Washer Switch Inspection” in this section.

Power Window Control System (If Equipped) Symptom Diagnosis

Condition	Possible Cause	Correction
None of power windows functions	Fuse blown	Replace fuse to check for short.
	Wiring or grounding faulty	Repair circuit.
	Ignition switch faulty	Check ignition switch referring to "Ignition (Main) Switch ON-Vehicle Inspection" in Section 8C.
	Power window main switch faulty	Check power window main switch referring to "Power Window Main Switch Inspection" in this section.
Only one power window does not function	Wiring or grounding faulty	Repair circuit.
	Power window main switch faulty	Check power window main switch referring to "Power Window Main Switch Inspection" in this section.
	Power window sub switch faulty	Check power window sub switch referring to "Power Window Sub Switch Inspection" in this section.
	Power window motor faulty	Check power window motor.

Power Door Lock System (If Equipped) Symptom Diagnosis

Condition	Possible Cause	Correction
No door is locked or unlocked by all switch	Fuse blown	Replace fuse to check for short.
	Door switch faulty	Check door switch referring to "Door Switch Inspection" in this section.
	Wiring or grounding faulty	Check power door lock system referring to "Power Door Lock System Circuit Inspection" in this section.
	Power door lock controller faulty	
No door is locked or unlocked by only power door lock switch	Power door lock switch faulty	Check power door lock switch referring to "Power Door Lock Switch Inspection" in this section.
	Wiring or grounding faulty	Check power door lock system referring to "Power Door Lock System Circuit Inspection" in this sectioin.
	Power door lock controller faulty	
No door is locked or unlocked by only driver side key cylinder switch	Driver side key cylinder switch faulty	Check driver side key cylinder switch referring to "Key Cylinder Switch Inspection" in this section.
	Wiring or grounding faulty	Check power door lock system referring to "Power Door Lock System Circuit Inspection" in this section.
	Power door lock controller faulty	
Only one door is not locked or unlocked	Wiring or grounding faulty	Repair circuit.
	Power door lock actuator faulty	Check power door lock actuator referring to "Door Lock Actuator Inspection" in this section.

Keyless Entry System (If Equipped) Symptom Diagnosis

NOTE:

Diagnose keyless entry system referring to the following table after confirming that power door lock system is good condition.

Condition	Possible Cause	Correction
No door is locked or unlocked by only keyless entry transmitter	Transmitter battery dead	Replace battery.
	Transmitter faulty	Replace transmitter.
	Code registration error	Perform code registration referring to “Transmitter Code Registration Procedure” in this section.
	Key remainder switch (in ignition switch) faulty	Check ignition switch referring to “Ignition (Main) Switch ON-Vehicle Inspection” in Section 8C.
	Wiring or grounding faulty	Check keyless entry system circuit referring to “Keyless Entry System Circuit Inspection” in this section.
	Power door lock controller faulty	
Turn signal lights are not flashed when doors are locked or unlocked by keyless entry transmitter	Wiring or grounding faulty	Check keyless entry system circuit referring to “Keyless Entry System Circuit Inspection” in this section.
	Power door lock controller faulty	
Interior light does not turn ON when doors are unlocked by keyless entry transmitter	Wiring or grounding faulty	Check keyless entry system circuit referring to “Keyless Entry System Circuit Inspection” in this section.
	Power door lock controller faulty	

Power Door Mirror Control System (If Equipped) Symptom Diagnosis

Condition	Possible Cause	Correction
No power door mirror operates	Fuse blown	Replace fuse to check for short.
	Wiring or grounding faulty	Repair circuit.
	Power door mirror switch faulty	Check power door mirror switch referring to “Power Door Mirror Switch Inspection” in this section.
One power door mirror does not operate	Wiring or grounding faulty	Repair circuit.
	Power door mirror switch faulty	Check power door mirror switch referring to “Power Door Mirror Switch Inspection” in this section.
	Power door mirror actuator faulty	Check power door mirror actuator referring to “Power Door Mirror Actuator Inspection” in this section.

Door Mirror Heater (If Equipped) Symptom Diagnosis

Condition	Possible Cause	Correction
No door mirror heater operates	Fuse blown	Replace fuse to check for short.
	Wiring or grounding faulty	Repair circuit.
	Rear window defogger switch faulty	Check rear window defogger switch referring to “Rear Window Defogger Switch Inspection” in this section.
One door mirror heater does not operate	Wiring or grounding faulty	Repair circuit.
	Door mirror heater faulty	Check door mirror heater referring to “Door Mirror Heater Switch Inspection” in this section.

Front Seat Heater (If Equipped) Symptom Diagnosis

Condition	Possible Cause	Correction
Neither seat back nor seat cushion becomes hot although seat heater switch is ON position	Fuse blown	Replace fuse to check for short.
	Wiring or grounding faulty	Repair circuit.
	Seat heater switch faulty	Check seat heater switch referring to “Seat Heater System Inspection” in this section.
	Seat heater circuit in seat back and/or seat cushion faulty	Check seat heater wire referring to “Seat Heater System Inspection” in this section.

Information Display Unit Symptom Diagnosis

NOTE:

This thermometer indicates the ambient temperature in front of the radiator. Under any one of the following listed conditions, however, even when the ambient temperature goes up, the thermometer display does not rise so as to correct the rise of the ambient temperature caused by the radiant heat of the engine. When the ambient temperature drops, the thermometer reading follows the change in the temperature.

Required Diagnosis Condition

- Turning the ignition switch on more than two hours after turning the ignition switch off
- At a vehicle speed of 30 km/h or higher (more than 30 seconds after the speed gets over 30 km/h)
- Ambient temperature between –30°C (–22°F) (exclusive) and 50°C (122°F) (exclusive)

If one or more of these conditions is (are) not satisfied, correct temperature will not be displayed.

Condition	Possible Cause	Correction
No displaying of information display unit	Fuse blown	Replace fuse to check for short.
	Wiring and/or grounding faulty	Repair or replace.
	Information display unit faulty	Replace information display unit.
Incorrect thermometer display	Outside air temperature sensor faulty	Inspect outside air temperature sensor referring to “Outside Air Temperature Sensor Inspection” in this section. Replace if faulty.
	VSS signal faulty	Inspect VSS referring to “DTC P0500 Vehicle Speed Sensor (VSS) Malfunction” in Section 6. Replace if faulty.
	Wiring and/or grounding faulty	Repair or replace.
Thermometer and fuel economy meter stay displaying “– –”.	Wiring and/or grounding faulty	Repair or replace.

On-Vehicle Service

Cautions in Body Electrical System Servicing

Refer to “Cautions in Body Electrical System Servicing” in Section 8B.

Rear Window Defogger Switch Inspection

Refer to “Rear Defogger Switch Inspection” in Section 1A.

Rear Window Defogger Wire Inspection

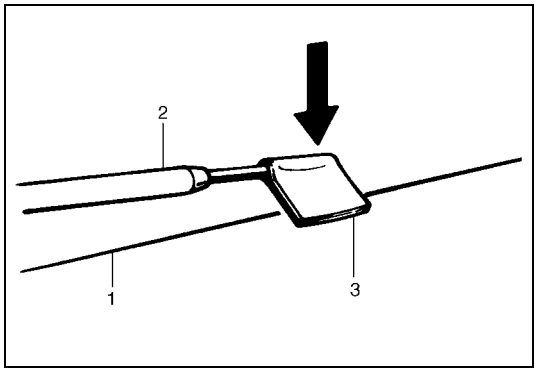

NOTE:

- **When cleaning rear window glass, use a dry cloth and wipe it along heat wire (1) direction.**
- **When cleaning glass, do not use detergent or abrasive containing glass cleaner.**
- **When measuring wire voltage, use a tester with negative probe (2) wrapped with a tin foil (3) which should be held down on wire by finger pressure.**

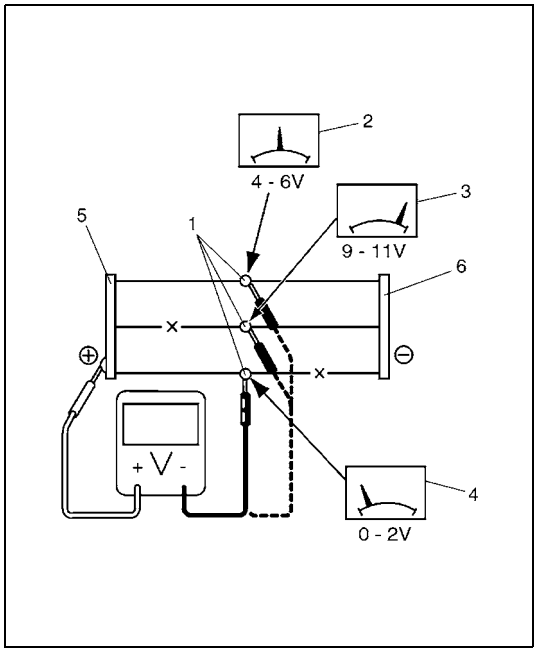

- Wire damage inspection.

a) Turn ignition switch ON.
b) Turn defogger switch ON.
c) Check voltage at the center (1) of each heat wire as shown below.
   If measured voltage is 10 V, wire must be damaged between its center and positive end (5).
   If voltage is 0 V, wire must be damaged between its center and ground end (6).

Defogger wire voltage

Voltage	Criteria
Approx. 4 – 6 V (2)	Good (No break in wire)
Approx. 9 – 11 V (3) or 0 – 2 V (4)	Broken wire

X: Damage point

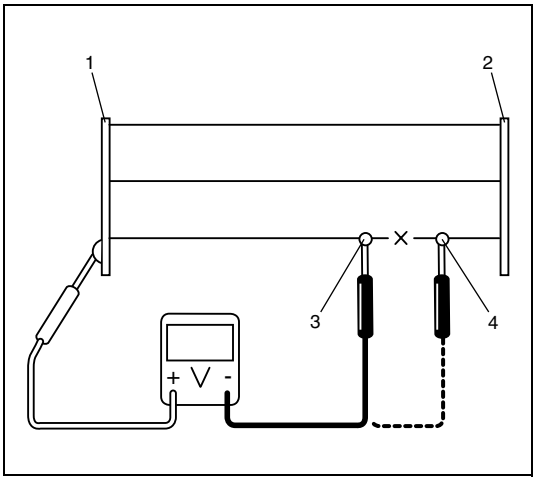

• Damage point locating.

a) Turn ignition switch ON.
b) Turn defogger switch ON.
c) Touch voltmeter positive (+) lead to heat wire positive terminal end (1).
d) Touch voltmeter negative (–) lead with a foil strip to heat wire positive terminal end (1), then move it along wire to the negative terminal end (2).
e) The place where voltmeter fluctuates from 0 – 2 V (3) to several volts (4) is where there is damage.

X: Damage point

Rear Window Defogger Wire Repair

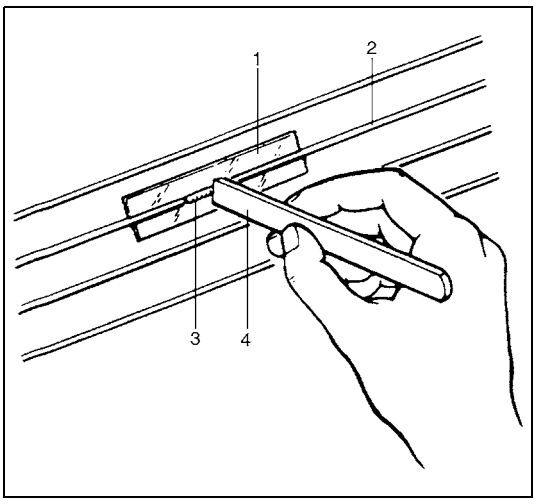

1) Use white gasoline for cleaning.
2) Apply masking tape (1) at both upper and lower sides of heat wire (2) to be repaired.
3) Apply commercially-available repair agent (3) with a fine-tip brush (4).
4) 2 to 3 minutes later, remove masking tapes (1).
5) Leave repaired heat wire as it is for at least 24 hours before operating rear defogger again.

Wipers and Washers Components

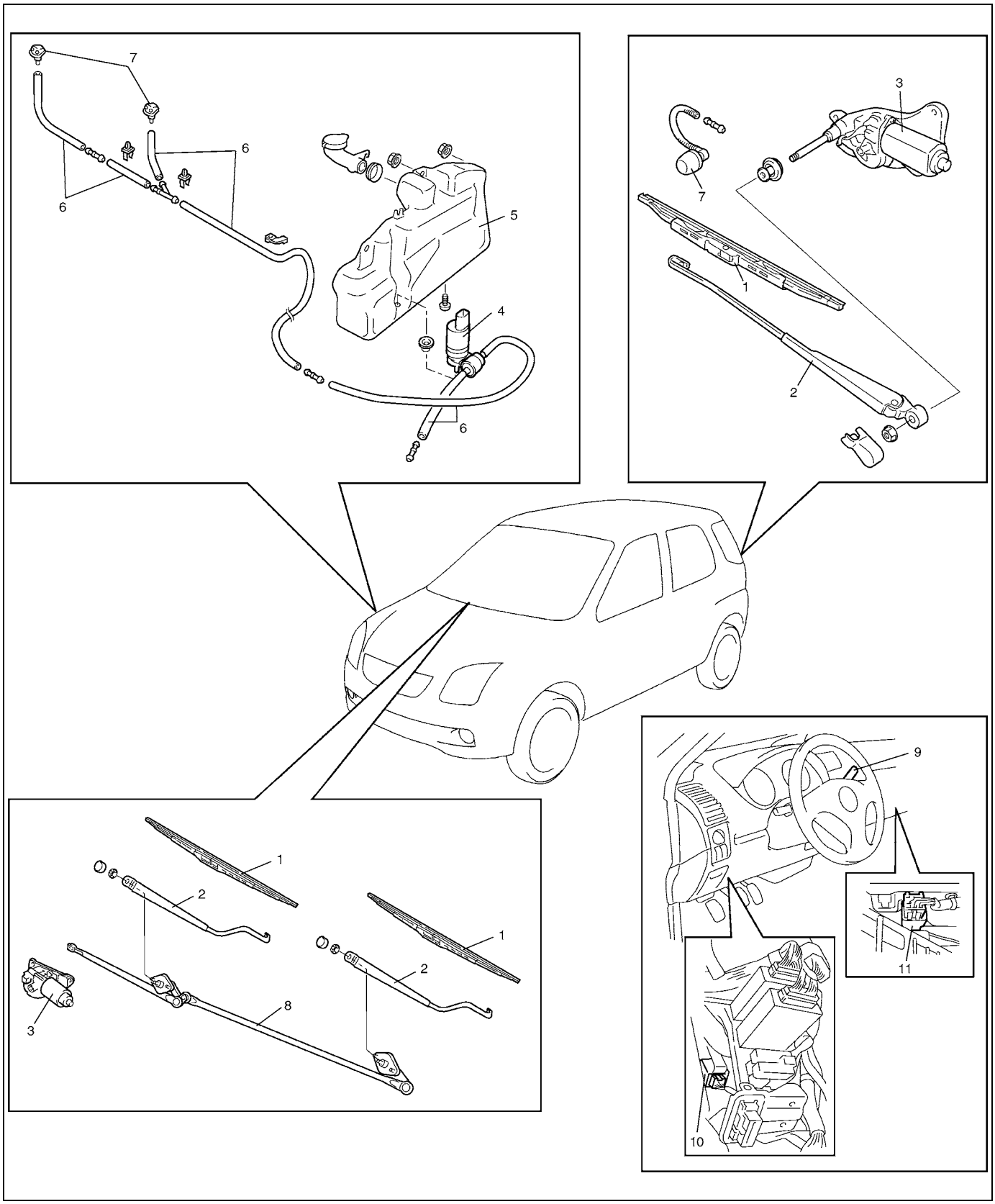

1. Wiper blade	4. Washer pump	7. Washer nozzle	10. Rear wiper intermittent timer
2. Wiper arm	5. Washer tank	8. Wiper link	11. Front wiper intermittent timer
3. Wiper motor	6. Washer hose	9. Wiper switch	

Wiper and Washer Switch Removal and Installation

REMOVAL

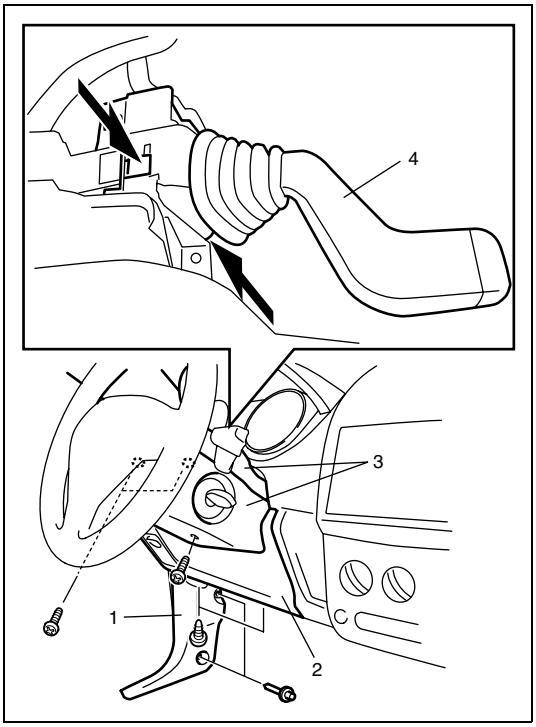

1) Disconnect negative (–) cable at battery.
2) Remove dash side trim (1), steering column hole cover (2) and steering column covers (3).
3) Remove wiper and washer switch (4) while releasing the locks.
4) Disconnect wiper and washer switch connector.

INSTALLATION

Reverse removal procedure for installation noting the followings.

- Connect wiper and washer switch connector securely.
- Push wiper and washer switch into steering lock assembly till it clicks.

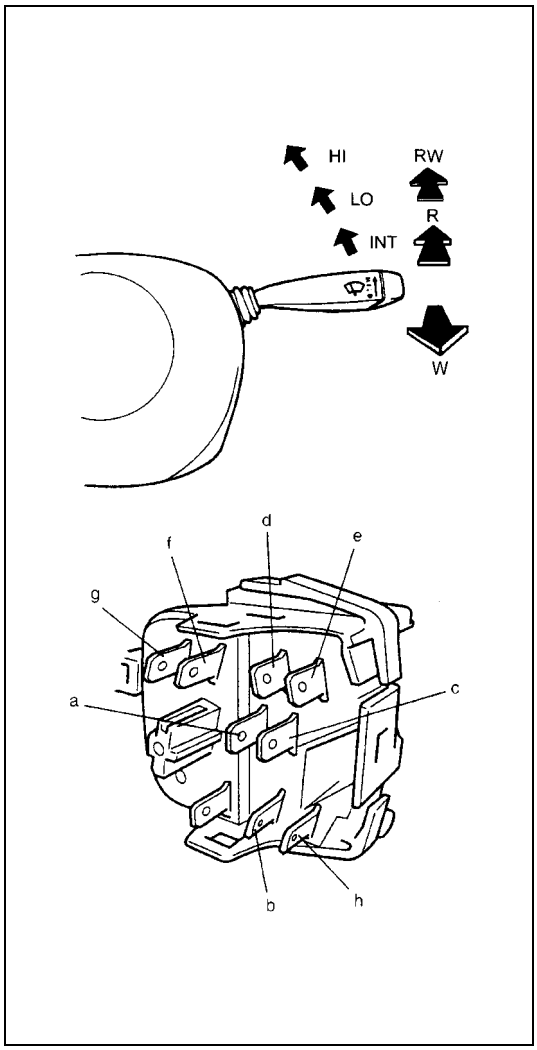

Wiper and Washer Switch Inspection

Check for continuity between terminals at each switch position as shown below.
If check result is not as specified, replace wiper and washer switch.

Front wiper switch specification

Switch Position \ Terminal	a	b	c	d	e
OFF			○	○	
INT	○		○	○	○
LO	○		○		
HI	○	○			

Front washer switch specification

Switch Position \ Terminal	a	f	g	h
OFF		○	○	
ON (W)	○	○	○	○

Rear wiper and washer switch specification

Switch Position \ Terminal	a	i	f	g	h
OFF			○	○	
ON (R)	○	○		○	○
REAR WASHER (RW)	○	○	○	○	○

Wiper Circuit Inspection

Front wiper auto stop circuit

1) Check that wiper motor operates with the wiper switch at low position.
2) Disconnect negative cable at battery.
3) Disable air bag system. Refer to “Disabling air bag system” in Section 10B.

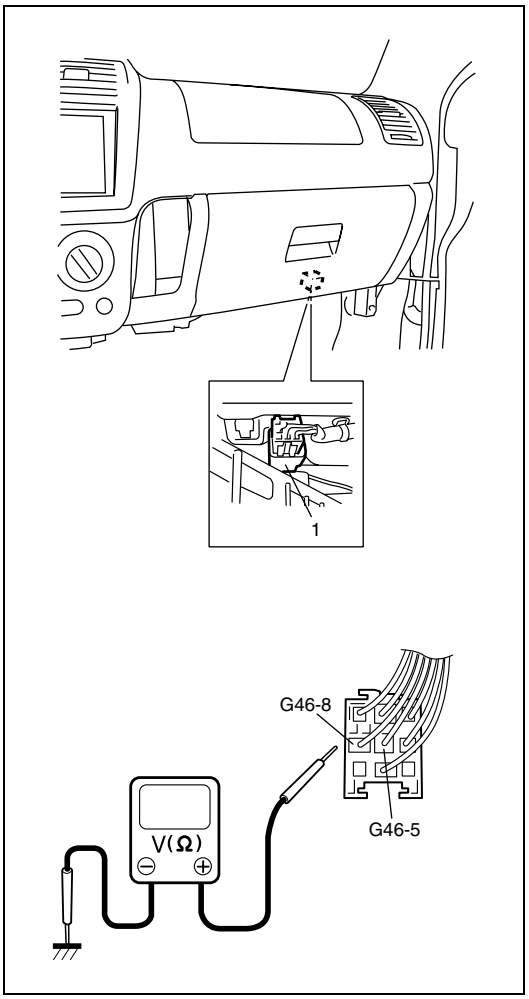

4) Pull out front wiper intermittent timer (1).
5) Disconnect coupler, and connect negative cable at battery.
6) Check that the voltage and resistance between the following terminals are as specification.

Terminals	Condition	Specification
G46-8 and ground	When ignition switch is in OFF.	Continuity
G46-5 and ground	When wiper blades are stopped at windshield base.	Continuity
	Turn ignition switch to ON. Turn front wiper switch to ON then to OFF so that wiper blades stop at the position except starting/returning point.	10 – 15 V

If check result is not satisfactory, repair wiring and check wiper motor.

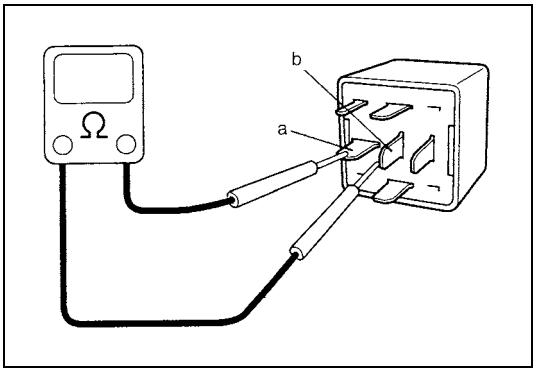

7) Check the continuity between terminals “a” and “b” of intermittent timer.
   If continuity is not obtained, replace intermittent timer and recheck.

8) After intermittent timer lead wire coupler is connected and intermittent timer is installed, enable air bag system. Refer to “Enabling air bag system” in Section 10B.

Front wiper intermittent circuit

1) Check that wiper motor operates with the wiper switch at low position, and return to original position with the wiper switch turned OFF.
2) Disconnect negative cable at battery.
3) Disable air bag system. Refer to “Disabling air bag system” in Section 10B.

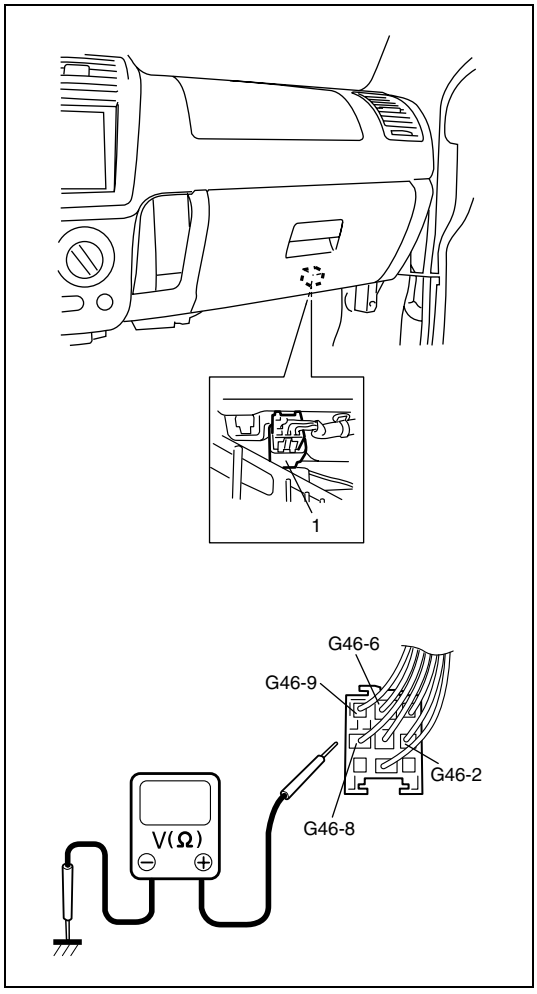

4) Pull out front wiper intermittent timer (1).
5) Disconnect coupler, and connect negative cable at battery.
6) Check that the voltage and resistance between the following terminals are as specifications.

Terminals	Condition	Specification
G46-2 and ground	When ignition switch is in OFF.	0 V
	When ignition switch is in ON.	10 – 15 V
G46-6 and ground	When ignition switch is in OFF.	Continuity
G46-8 and ground	When ignition switch is in OFF.	Continuity
G46-9 and ground	When ignition switch is in ON and front wiper switch is in OFF.	0 V
	When ignition switch is in ON and front wiper switch is in intermittent position.	10 – 15 V

If check result is not satisfactory, repair wiring and check wiper motor.

NOTE:

The wiper motor operates the wiper arms at an interval of approximately 6 seconds per one operation at low speed.

7) After intermittent timer lead wire coupler is connected and intermittent timer is installed, enable air bag system. Refer to “Enabling air bag system” in Section 10B.

Front washer linked circuit

1) Check that wiper motor operates with the wiper switch at low position, and return to original position with the wiper switch turned OFF.
2) Disconnect negative cable at battery.
3) Disable air bag system. Refer to “Disabling air bag system” in Section 10B.

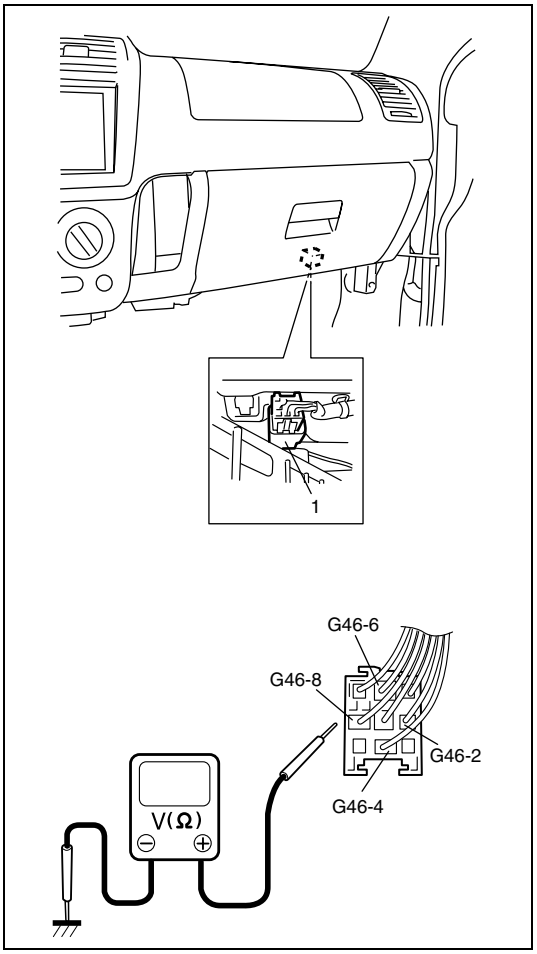

4) Pull out front wiper intermittent timer (1).
5) Disconnect coupler, and connect negative cable at battery.
6) Check that the voltage and resistance between the following terminals are as specification.

Terminals	Condition	Specification
G46-2 and ground	When ignition switch is in OFF.	0 V
	When ignition switch is in ON.	10 – 15 V
G46-6 and ground	When ignition switch is in OFF.	Continuity
G46-8 and ground	When ignition switch is in OFF.	Continuity
G46-4 and ground	When ignition switch is in ON and front washer switch is in OFF.	0 V
	When ignition switch is in ON and front washer switch is in ON.	10 – 15 V

If check result is not satisfactory, repair wiring and check wiper motor.

NOTE:

When front washer switch is in ON position for one second or more and then turned OFF, the wiper motor operates at low speed for approximately 5 seconds after front washer switch is turned OFF.

7) After intermittent timer lead wire coupler is connected and intermittent timer is installed, enable air bag system. Refer to “Enabling air bag system” in Section 10B.

Rear wiper auto stop circuit

1) Check that wiper motor operates with the wiper switch at rear position.
2) Disconnect negative cable at battery.
3) Disable air bag system. Refer to “Disabling air bag system” in section 10B.

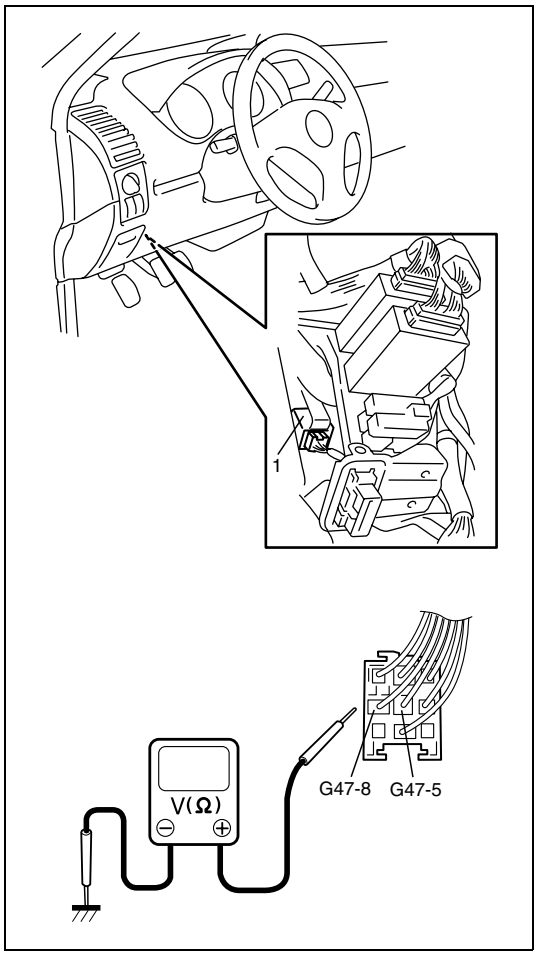

4) Pull out rear wiper intermittent timer (1).
5) Disconnect coupler, and connect negative cable at battery.
6) Check that the voltage and resistance between the following terminals are as specification.

Terminals	Condition	Specification
G47-8 and ground	When ignition switch is in OFF.	Continuity
G47-5 and ground	When wiper blades are stopped at windshield base.	Continuity
	Turn ignition switch to ON. Turn rear wiper switch to ON then to OFF so that wiper blades stop at the position except starting point.	10 – 15 V

If check result is not satisfactory, repair wiring and check wiper motor.

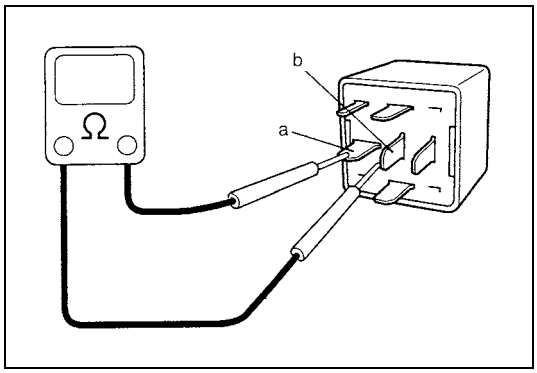

7) Check the continuity between terminals “a” and “b” of intermittent timer. If continuity is not obtained, replace intermittent timer and recheck.

8) After intermittent timer lead wire coupler is connected and intermittent timer is installed, enable air bag system. Refer to “Enabling air bag system” in Section 10B.

Rear wiper intermittent circuit

1) Check that wiper motor operates with the wiper switch at rear position, and return to original position with the wiper switch turned OFF.
2) Disconnect negative cable at battery.
3) Disable air bag system. Refer to “Disabling air bag system” in Section 10B.

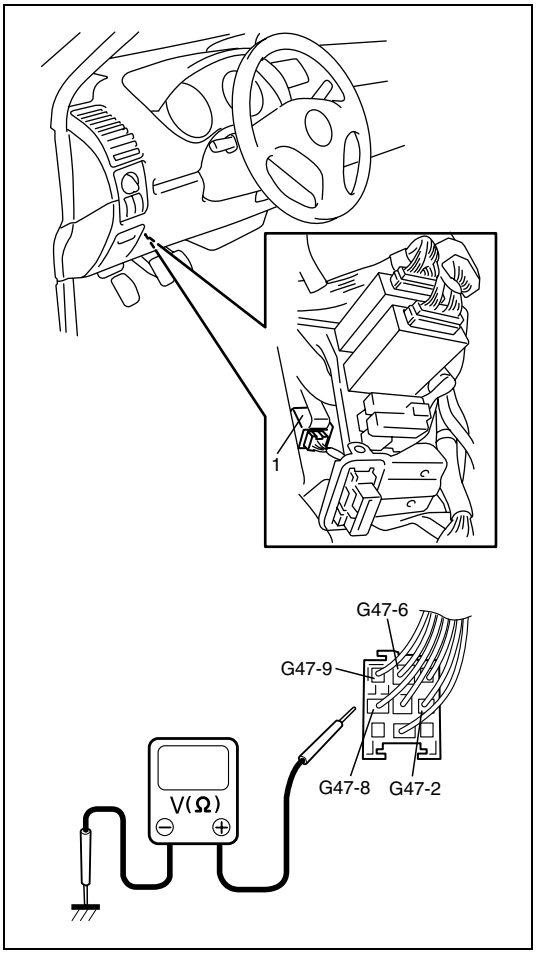

4) Pull out rear wiper intermittent timer (1).
5) Disconnect coupler, and connect negative cable at battery.
6) Check that the voltage and resistance between the following terminals are as specifications.

Terminals	Condition	Specification
G47-2 and ground	When ignition switch is in OFF.	0 V
	When ignition switch is in ON.	10 – 15 V
G47-6 and ground	When ignition switch is in OFF.	Continuity
G47-8 and ground	When ignition switch is in OFF.	Continuity
G47-9 and ground	When ignition switch is in ON and rear wiper switch is in OFF.	0 V
	When ignition switch is in ON and rear wiper switch is in ON position.	10 – 15 V

If check result is not satisfactory, repair wiring and check wiper motor.

NOTE:

The wiper motor operates the wiper arms at an interval of approximately 6 seconds per one operation.

7) After intermittent timer lead wire coupler is connected and intermittent timer is installed, enable air bag system. Refer to “Enabling air bag system” in Section 10B.

Rear washer linked circuit

1) Check that wiper motor operates with the wiper switch at rear position, and return to original position with the wiper switch turned OFF.
2) Disconnect negative cable at battery.
3) Disable air bag system. Refer to “Disabling air bag system” in Section 10B.

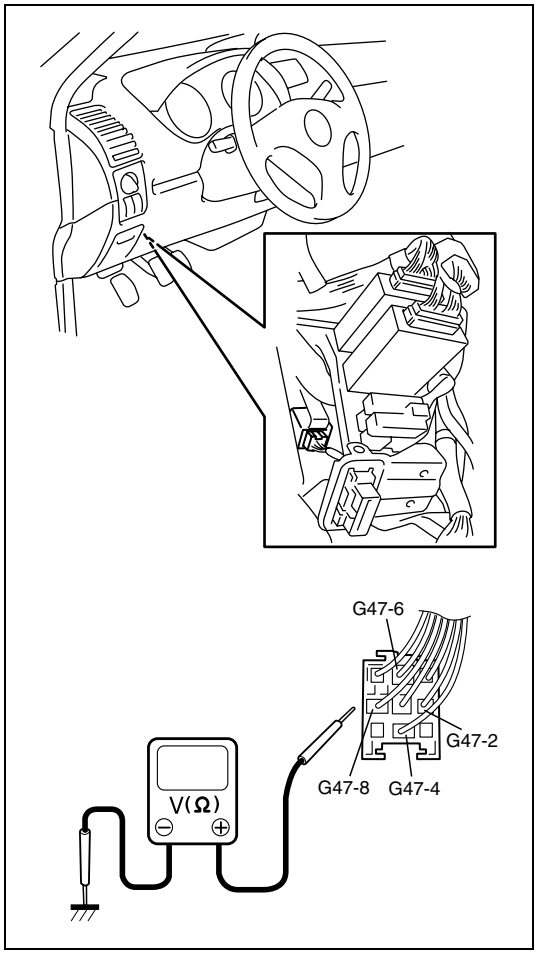

4) Pull out rear wiper intermittent timer (1).
5) Disconnect coupler, and connect negative cable at battery.
6) Check that the voltage and resistance between the following terminals are as specification.

Terminals	Condition	Specification
G47-2 and ground	When ignition switch is in OFF.	0 V
	When ignition switch is in ON.	10 – 15 V
G47-6 and ground	When ignition switch is in OFF.	Continuity
G47-8 and ground	When ignition switch is in OFF.	Continuity
G47-4 and ground	When ignition switch is in ON and rear washer switch is in OFF.	0 V
	When ignition switch is in ON and rear washer switch is in ON.	10 – 15 V

If check result is not satisfactory, repair wiring and check wiper motor.

NOTE:

When rear washer switch is in ON position for one second or more and then turned OFF, the rear wiper motor operates for approximately 5 seconds after rear washer switch is turned OFF.

7) After intermittent timer lead wire coupler is connected and intermittent timer is installed, enable air bag system. Refer to “Enabling air bag system” in Section 10B.

Washer Tank and Washer Pump Removal and Installation

REMOVAL

1) Disconnect negative cable at battery.
2) Remove front fender lining (RH).

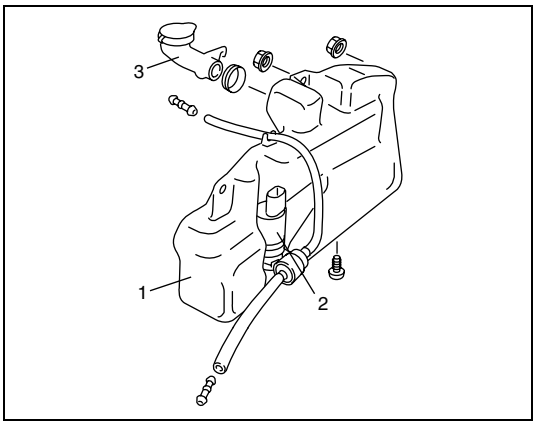

3) Remove washer tank attaching nuts and inlet pipe (3).
4) Disconnect pump lead wire coupler and hose(s).
5) Remove washer tank (1).
6) Remove washer pump (2) from washer tank (1).

INSTALLATION

Reverse removal procedure for installation.

Washer Pump Inspection

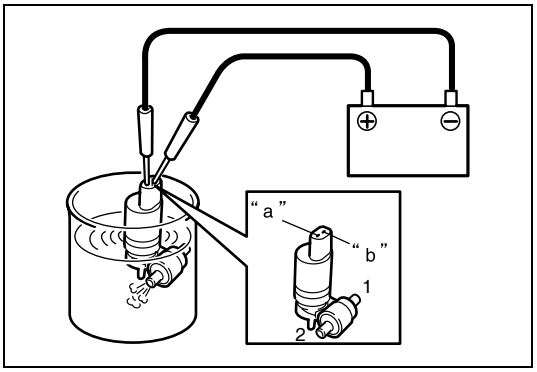

1) Connect battery (+) terminal to pump terminal “a”, and battery (–) terminal to pump terminal “b”.
   Check that water jets from front washer side (1).
2) Connect battery (+) terminal to pump terminal “b”, and battery (–) terminal to pump terminal “a”.
   Check that water jets from rear washer side (2).

Front Wiper Motor Inspection

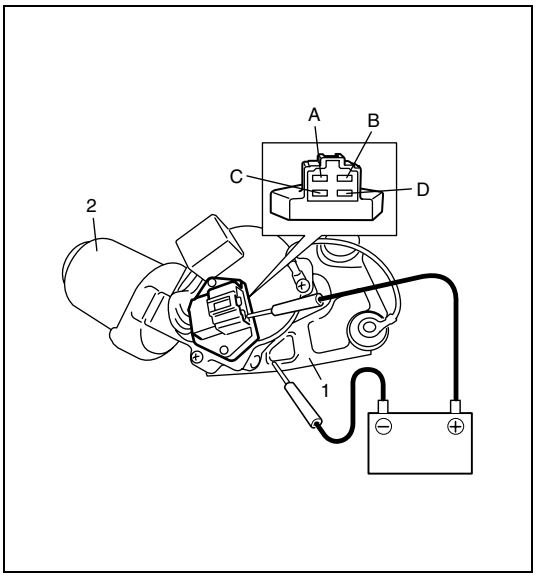

1) For low speed check.
   a) Use a 12 V battery
   b) Connect battery positive (+) terminal to wiper motor terminal “A” and battery negative (–) terminal to wiper motor bracket (1) (wiper motor ground).
      If motor (2) rotates at low revolution speed of 44 to 52 rpm, it is proper.
2) For high speed check.
   a) Use a 12 V battery.
   b) Connect battery positive (+) terminal to wiper motor terminal “B” and battery negative (–) terminal to wiper motor bracket (1) (wiper motor ground).
      If motor (2) rotates at high revolution speed of 64 to 78 rpm, it is proper.

If check result is not as specified, replace wiper motor.

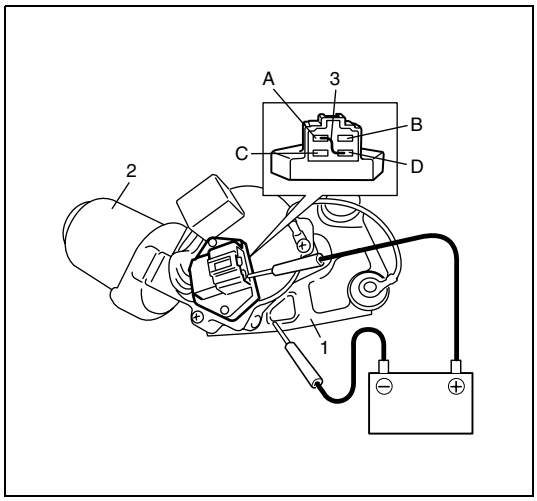

3) Automatic stop action check.
   a) Connect 12 V battery (+) terminal to wiper motor terminal "A" and battery (–) terminal to bracket (1) (wiper motor ground), and let the motor (2) turn.
   b) Disconnect wiper motor terminal "A" from battery, and let the motor (2) stop.
   c) Connect wiper motor terminal "A" and "D" with a jumper wire (3), and connect wiper motor terminal "C" to battery (+) terminal. Observe the motor (2) turns once again then stops at a given position.
   d) Repeat a) thru c) several times and inspect if the motor (2) stops at the given position every time.

If check result is not as specified, replace wiper motor.

Rear Wiper Motor Inspection

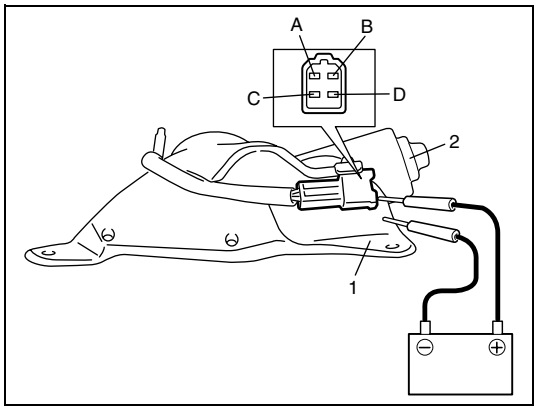

1) Testing motor action.
   a) Use a 12 V battery.
   b) Connect battery positive (+) terminal to wiper motor terminal "A" and battery negative (–) terminal to wiper motor bracket (1) (wiper motor ground).
   If motor (2) rotates at low revolution speed of 35 to 45 rpm, it is proper.

If check result is not as specified, replace rear wiper motor.

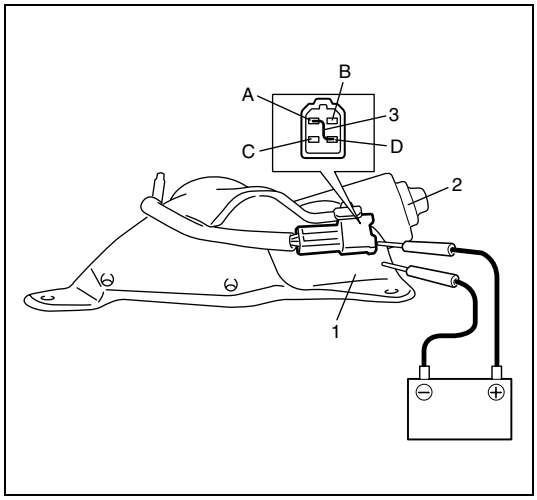

2) Automatic stop action check.
   a) Connect 12 V battery (+) terminal to wiper motor terminal "A" and battery (–) terminal to bracket (1) (wiper motor ground), and let the motor (2) turn.
   b) Disconnect wiper motor terminal "A" from battery, and let the motor (2) stop.
   c) Connect wiper motor terminal "A" and "D" with a jumper wire (3), and connect wiper motor terminal "C" to battery (+) terminal. Observe the motor (2) turns once again then stops at a given position.
   d) Repeat a) thru c) several times and inspect if the motor (2) stops at the given position every time.

If check result is not as specified, replace rear wiper motor.

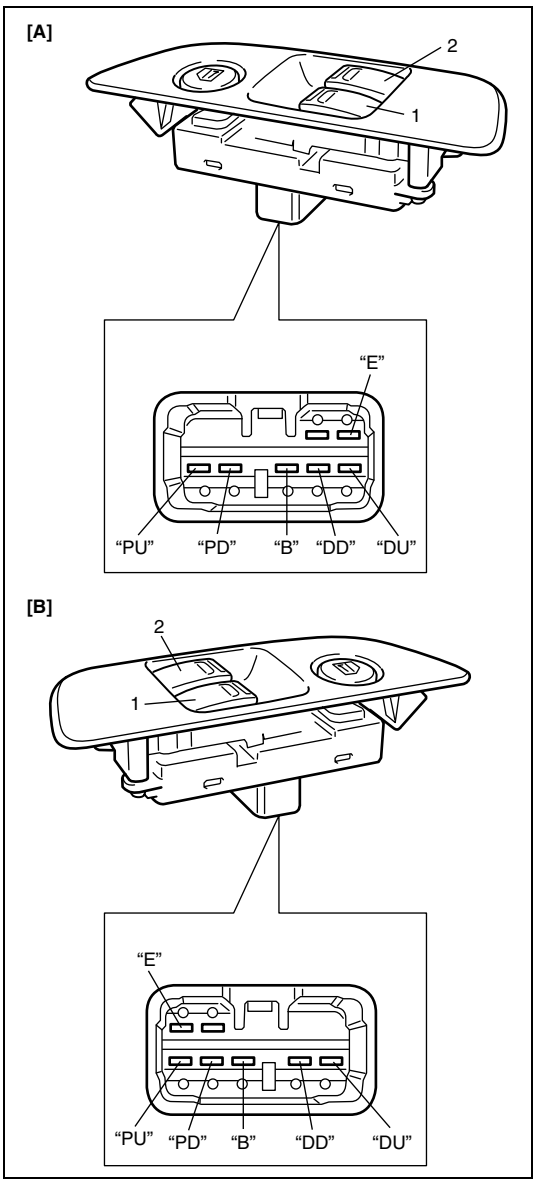

Power Window Main Switch Inspection

Check for continuity between terminals at each position.
If check result is not as specified, replace power window main switch.

Power window main switch specification

	Driver Side Window Switch (1)				Passenger Side Window Switch (2)			
Terminal / Switch Position	B	DU	DD	E	B	PU	PD	E
UP	○	○			○	○		
			○	○			○	○
OFF			○	○			○	○
		○		○		○		○
DOWN	○		○		○		○	
		○		○		○		○

[A]: LH steering vehicle
[B]: RH steering vehicle

Power Window Sub Switch Inspection

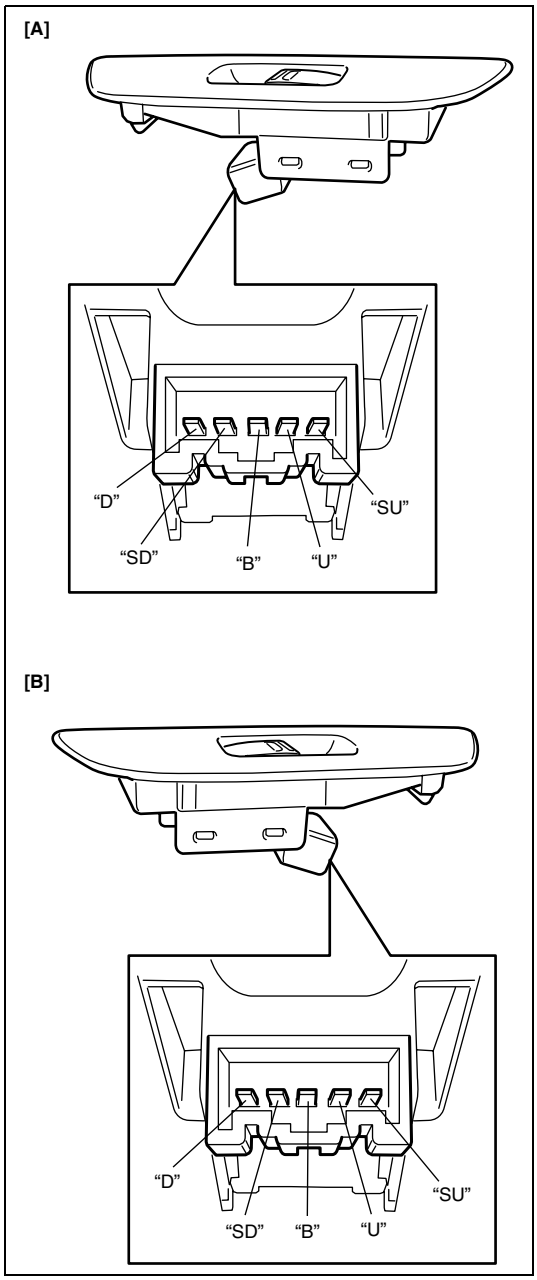

Check for continuity between terminals at each position.
If check result is not as specified, replace power window sub switch.

Power window sub switch specification

Switch Position \ Terminal	B	SU	SD	U	D
UP	○		○	○	○
OFF		○	○	○	○
DOWN	○	○		○	○

[A]: LH steering vehicle
[B]: RH steering vehicle

Stop Lamp (Brake) Switch Inspection

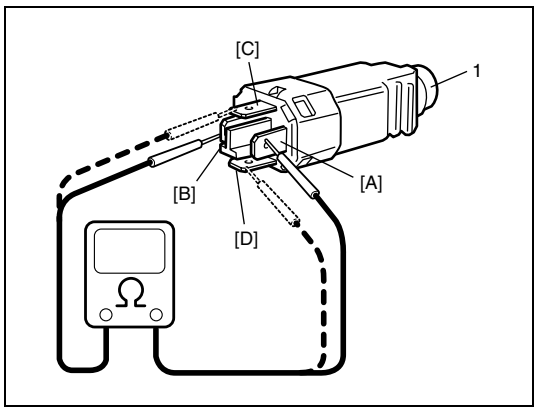

Check stop lamp (brake) switch for continuity as shown.
If check result is not as specified, replace stop lamp (brake) switch.

Stop lamp (brake) switch specification
Terminal [A] – [B]
Switch slider (1) pushed ON: Continuity
Switch slider (1) pushed OFF: No continuity
Terminal [C] – [D]
Switch slider (1) pushed ON: No continuity
Switch slider (1) pushed OFF: Continuity

Power Door Lock System Component Location

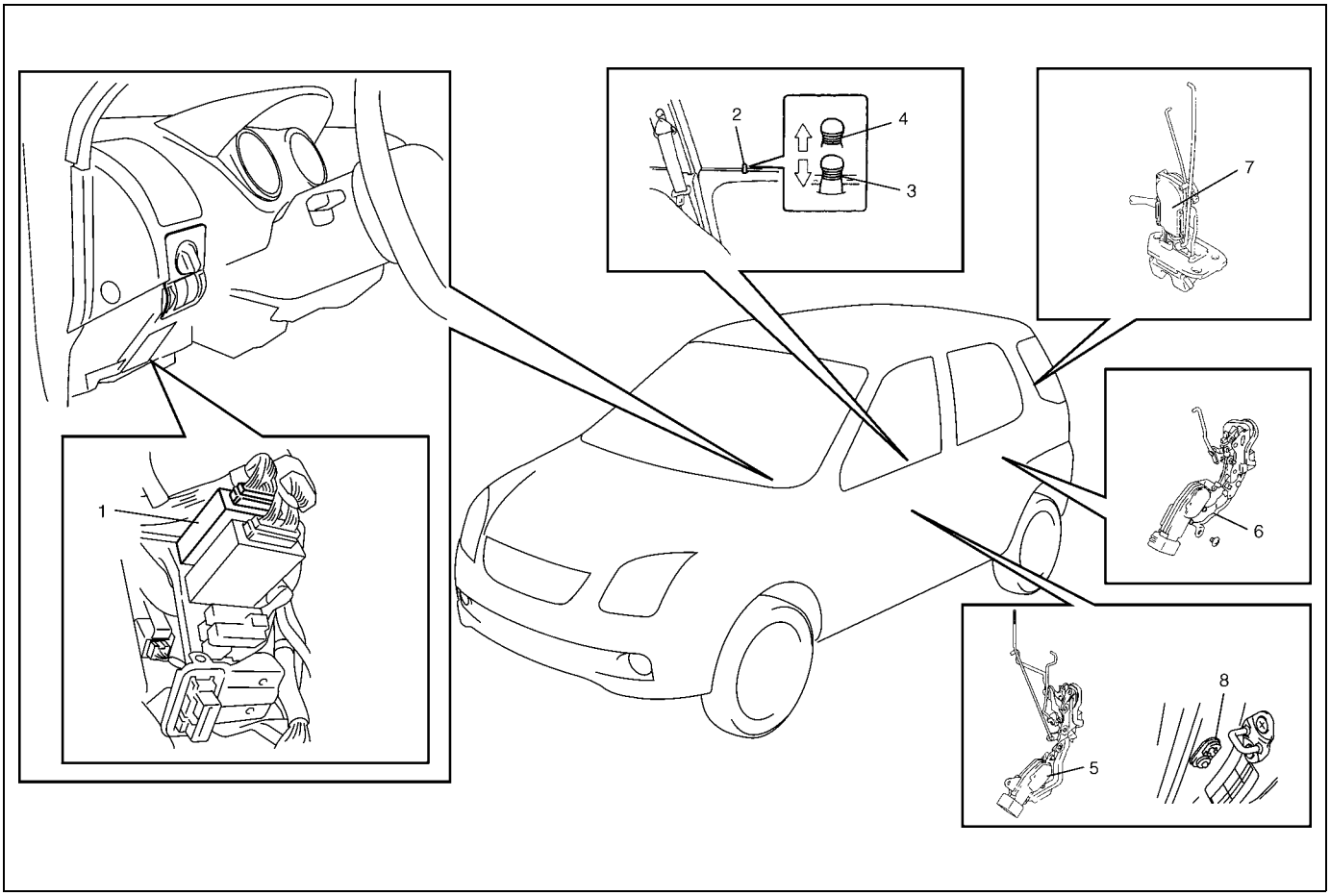

1. Power door lock controller	4. UNLOCK position	7. Back door actuator
2. Driver side door knob switch	5. Front door actuator	8. Door switch
3. LOCK position	6. Rear door actuator	

Power Door Lock System Operation Inspection

1) Check the following operation:
   a) When the driver side key cylinder is turned to LOCK once, check all doors lock.
   b) When the driver side door key cylinder is turned to UNLOCK twice, check if all doors unlock.
   c) For vehicle equipped dead lock system:
      When the driver side door key cylinder is turned to LOCK twice within 2 seconds, check if all doors lock and all door lock knobs not pulled up by hand.

If check result is not satisfied, go to “Power Door Lock System Circuit Inspection” in this section.

Power Door Lock System Circuit Inspection

1) Disconnect negative cable from battery.
2) Disconnect door lock controller coupler.

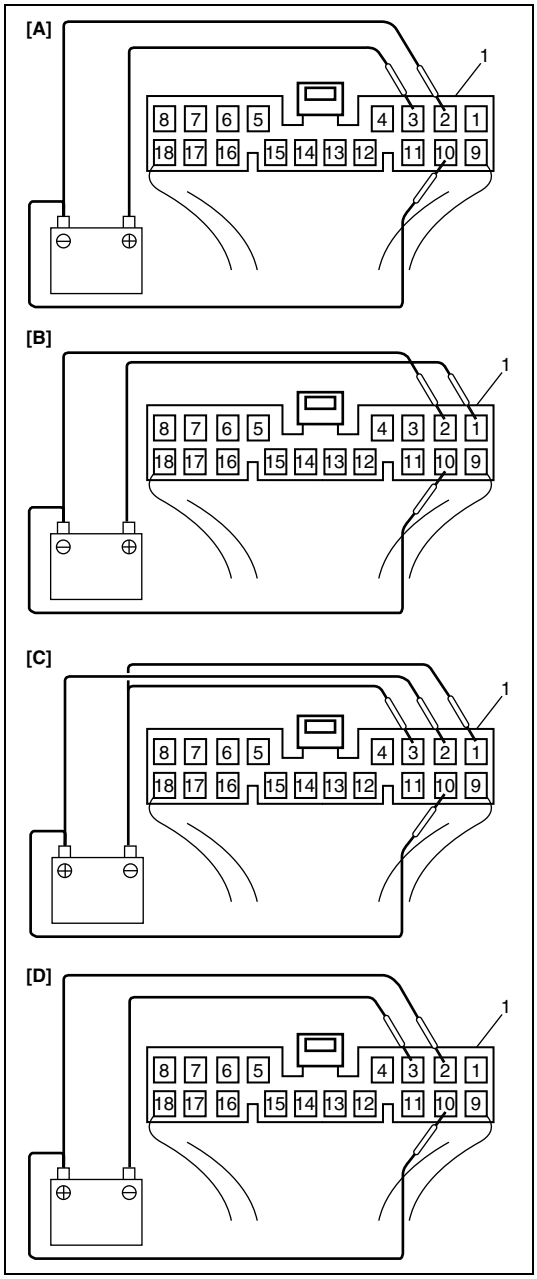

3) Confirm that all doors are unlocked. Connect battery positive (+) and negative (–) terminals to door lock controller coupler terminals and check power door lock operation as follows.
If it does not operate as specified, repair applicable circuit or check actuator. If it operates as satisfactory, go to next step.

Power door lock operation for vehicle with dead lock system

Step	TERMINAL				OPERATION
	G11-1	G11-2	G11-3	G11-10	
1	–	⊖	⊕	⊖	UNLOCK ⟶ LOCK
2	⊕	⊖	–	⊖	LOCK ⟶ DEAD LOCK
3	⊖	⊕	⊖	⊕	DEAD LOCK ⟶ UNLOCK

[A]: Step1: Lock operation check
[B]: Step 2: Dead lock operation check
[C]: Step 3: Unlock operation check

Power door lock operation for vehicle without dead lock system

Step	TERMINAL			OPERATION
	G11-2	G11-3	G11-10	
1	⊖	⊕	⊖	UNLOCK ⟶ LOCK
2	⊕	⊖	⊕	LOCK ⟶ UNLOCK

[A]: Step 1: Lock operation check
[D]: Step 2: Unlock operation check
1. Power door lock controller coupler “G11”

4) Connect negative (–) cable to battery.

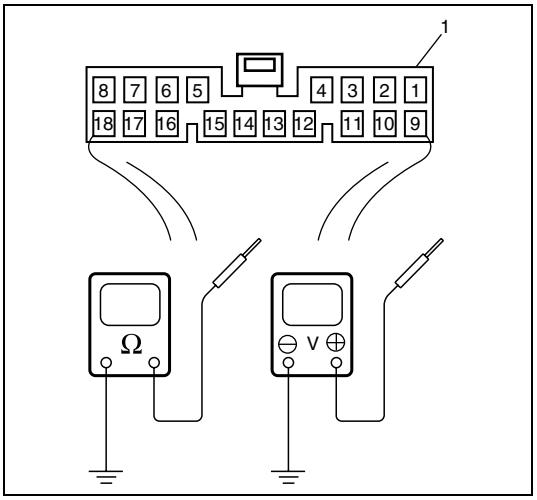

5) Check that the voltage and resistance between the following terminals and body ground are specifications under each conditions.
If check result is OK, replace door lock controller. If check result is not as specified, repair circuit.

1. Power door lock controller coupler “G11” viewed from harness side

Power door lock system circuit check

Terminal	Wire	Circuit	Specification	Condition
G11-6	WHT	Power door lock switch circuit	Continuity	Power door lock switch is in pushed position.
			No continuity	Power door lock switch is in free position.
G11-9	WHT/BLU	Main power supply	10 – 14 V	–
G11-11	WHT/BLK	Key remainder circuit	10 – 14 V	Ignition switch in ACC position.
			0 – 1 V	Ignition key is not in ignition.
G11-12	RED/BLK	Ignition switch circuit	10 – 14 V	Ignition switch is in ON position.
			0 – 1 V	Ignition switch is in OFF position.
G11-13	RED/BLU	Driver side key cylinder circuit (UNLOCK signal)	Continuity	Driver side key cylinder is in UNLOCK position.
			No continuity	Except the above-mentioned condition.
G11-14	WHT/RED	Driver side key cylinder circuit (LOCK signal)	Continuity	Driver side key cylinder is in LOCK position.
			No continuity	Except the above-mentioned condition.
G11-15	BLK/RED	Door switch circuit	0 – 1 V	Driver side, passenger side, rear driver side, rear passenger side or rear end door is open.
			10 – 14 V	All doors are close.
G11-17	BLK	Ground	1 Ω or less	–

Power Door Lock Switch Inspection

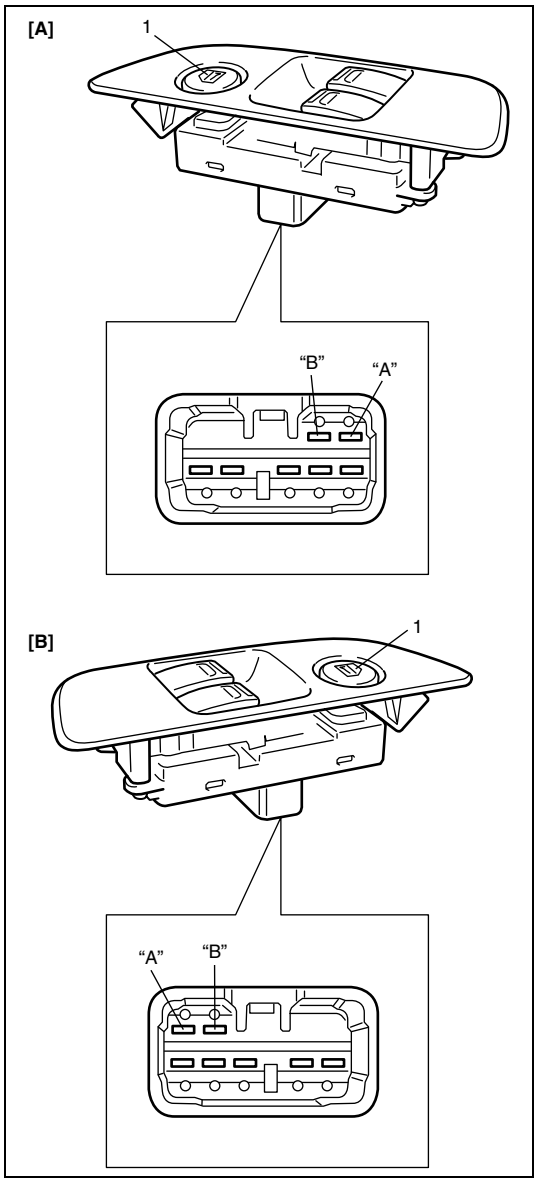

Check for continuity between terminals at each position.
If check result is not as specified, replace power window main switch.

Power door lock switch specification

Terminal		A	B
Switch (1)	PUSH	○	○
	FREE		

[A]: LH steering vehicle
[B]: RH steering vehicle
1. Power door lock switch

Key Cylinder Switch Inspection

1) Disconnect negative (–) cable at battery.
2) Remove front door lock assembly referring to “Front Door Lock Assembly Inspection” in Section 9.
3) Inspect continuity between terminals under the following key position.

If check result is not as specified, replace door lock assembly.

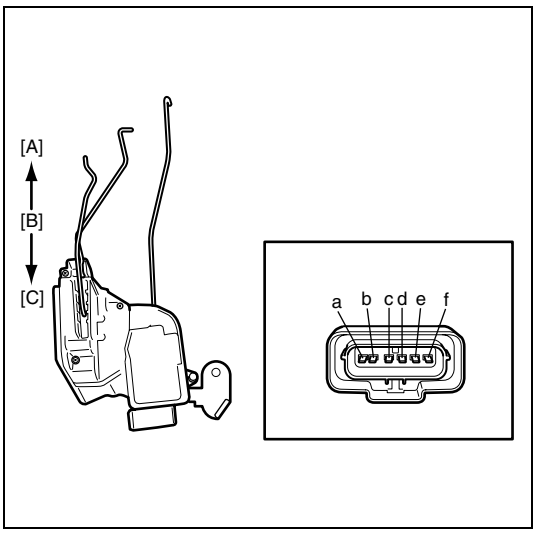

Key cylinder switch specification

Right side switch terminals		a	b	c
Left side switch terminals		f	e	d
Key position	Neutral			
	Unlock	○	○	
	Lock	○		○

[A]: Lock
[B]: Neutral
[C]: Lock

Door Lock Actuator Inspection

1) Disconnect negative (–) cable at battery.
2) Remove front door lock assembly referring to “Front Door Lock Assembly Inspection” in Section 9.
3) Remove rear door lock assembly referring to “Rear Door Lock Assembly Inspection” in Section 9.
4) Remove rear end door lock assembly referring to “Rearend Door Removal and Installation” in Section 9.
5) Connect 12 V battery positive and negative terminals to the door lock actuator terminals shown below.
   If it does not operate as specified in the table below, replace door lock assembly.

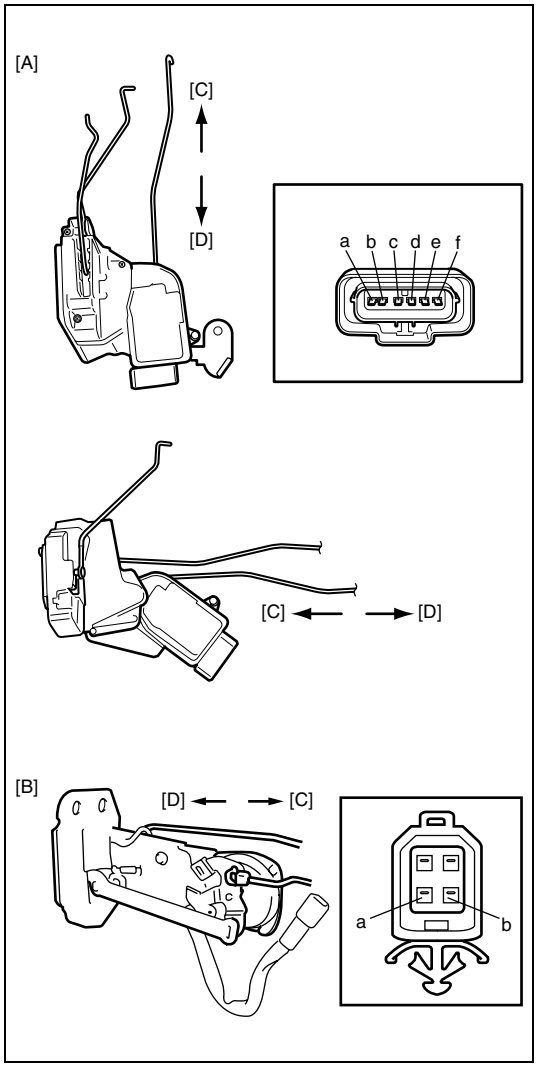

Front and rear door lock actuator specification

Right side switch terminals			f	e	d
Left side switch terminals			a	b	c
Unlock	⇒	Lock	⊖	⊖	⊕
Lock	⇒	Dead lock	⊖	⊕	⊕
Lock	⇒	Unlock	⊕	⊖	⊖
Dead lock	⇒	Unlock			

Rear end door lock actuator specification

			a	b
Unlock	⇒	Lock	⊕	⊖
Lock	⇒	Unlock	⊖	⊕

[A]: Front and rear door lock actuator
[B]: Rear end door lock actuator
[C]: Unlock
[D]: Lock

Door Switch Inspection

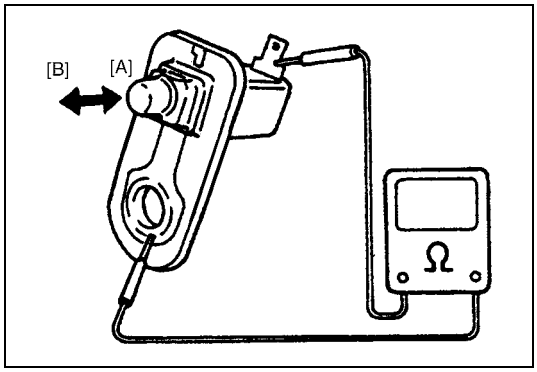

Remove door switch from body and check switch for continuity.
If found to be detective, replace switch.

Door switch specification

OFF [A] position (Door closed)	No continuity
ON [B] position (Door open)	Continuity

Power Door Lock System With Keyless Entry System Component Location

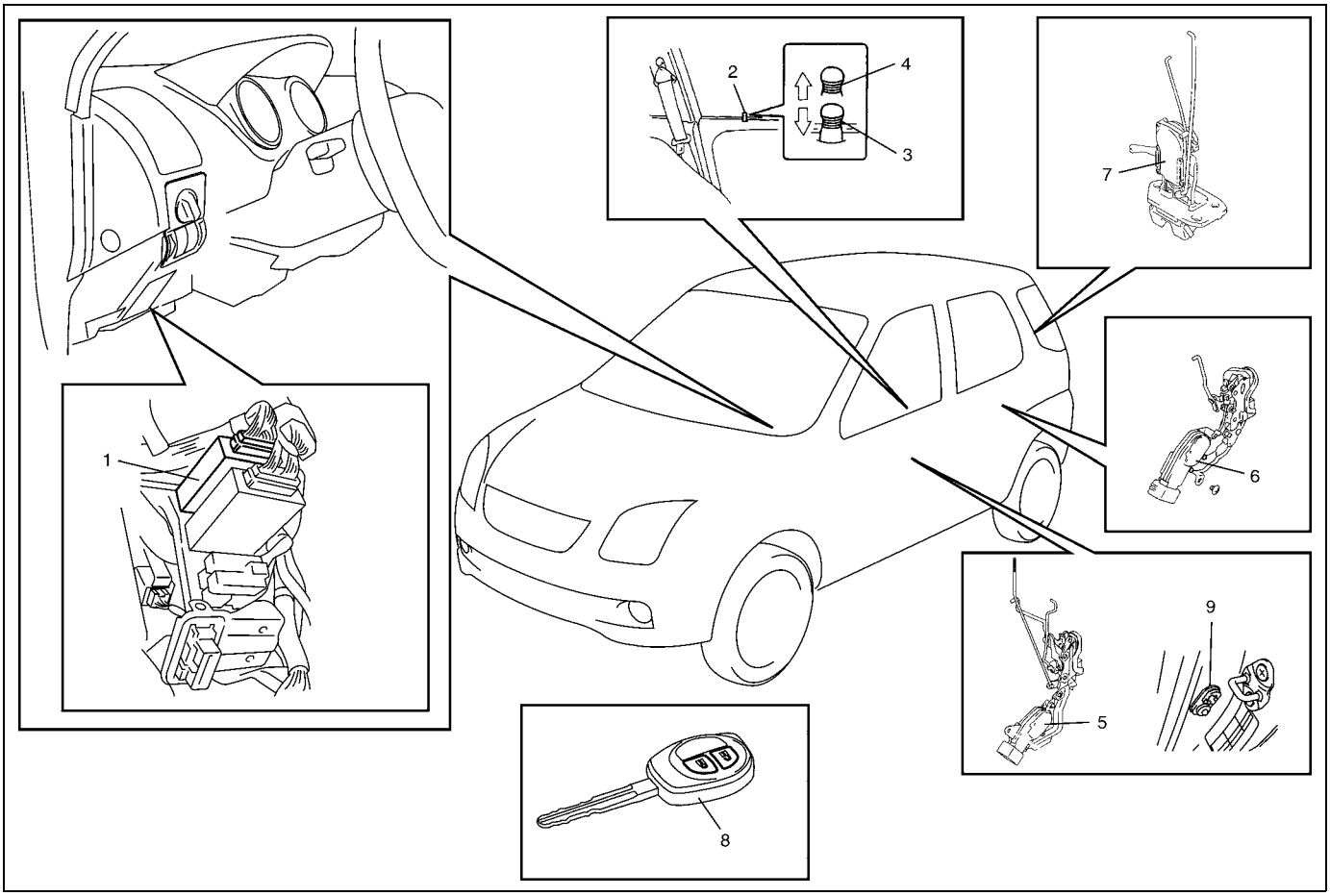

1. Power door lock controller	4. UNLOCK position	7. Back door actuator
2. Driver side door knob switch	5. Front door actuator	8. Transmitter
3. LOCK position	6. Rear door actuator	9. Door switch

System Description

The keyless entry system has the following signal modes in order to feed back the signal when the controller receives LOCK and UNLOCK signals from transmitter.

Received signal / Signal mode	LOCK signal	UNLOCK signal
Hazard warning light signal mode	The hazard warning lights flash once.	The hazard warning lights flash twice and the interior light turns on for about 15 seconds.
Interior light signal mode	The interior light flashes twice.	The interior light turns on for about 15 seconds.

NOTE:

- **These signal modes can be changed referring to “Change of Signal Mode” in this section.**
- **The initial condition is the hazard warning light signal mode.**

Change of Signal Mode

NOTE:

When the keyless entry signal mode is changed from the hazard warning signal mode to interior light signal mode, interior light will flash once.
When the signal mode is changed from interior light signal mode to hazard warning signal mode, hazard warning light will flash once.

1) Make sure that all doors are closed and ignition key is out of ignition switch.
2) Perform the following procedures within 10 seconds.
   a) Insert ignition key to ignition switch.
   b) Turn ignition switch to “ACC” position, turn ignition switch to “OFF” position, and then pull off ignition key from ignition switch.
   c) Repeat step b).
   d) Turn ignition switch to “ACC” position, turn ignition switch to “OFF” position, and then push “UNLOCK” button on transmitter more than three times.
3) Confirm that either hazard warning light or interior light flash once. With this, change of signal mode is completed.

Keyless Entry System Operation Inspection

NOTE:

If keyless entry system is in interior light signal mode, change to hazard warning light signal mode referring to "Change of Signal Mode" in this section.

1) Confirm that power door lock system is in good condition referring to "Power Door Lock System Operation Inspection" in this section.
2) Confirm that turn signal and hazard waning light system is in good condition.
3) Check transmitter battery for dead. If battery is dead, replace battery referring to "Replacement of Transmitter Battery" in this section.
4) Confirm that all doors are closed and unlocked.

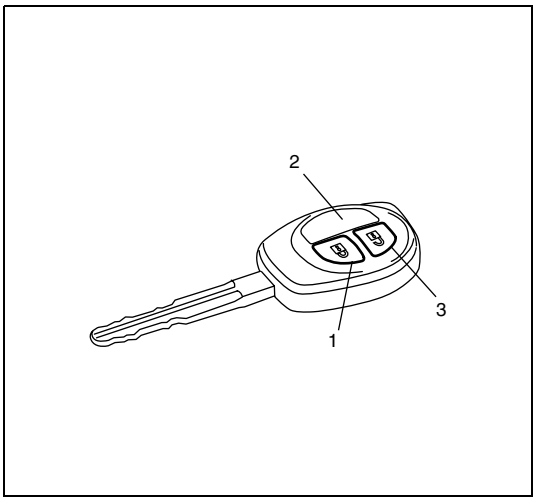

5) Check the following operation:
   a) When pushing "LOCK" button (1) on transmitter (2) once, check it all doors lock and hazard waning lights flash once.
   b) When pushing "UNLOCK" button (3) on transmitter (2) twice, check it all doors unlock, hazard waning lights flash twice and interior light turns on for several seconds with the interior light switch in the middle position.
   c) For vehicle equipped dead lock system:
      When pushing "LOCK" button (1) on transmitter (2) twice within 2 seconds, check that all doors lock and can not be all door lock knobs can not be by hand.

If check result is not satisfactory, go to "Keyless Entry System Circuit Inspection" in this section.

Keyless Entry System Circuit Inspection

NOTE:

If keyless entry system is in interior light signal mode, change to hazard warning light signal mode referring to "Change of Signal Mode" in this section.

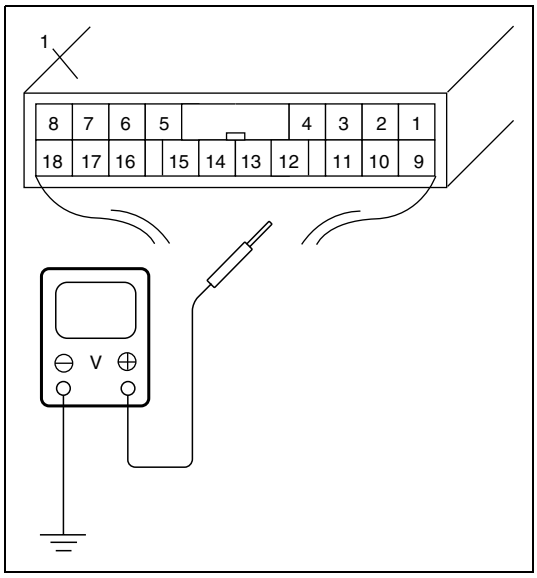

Keyless entry system circuit check

Check that the voltage and continuity between the following terminals and body ground are specifications under each conditions.
If check result is not as specified, check relevant circuit.
If circuit is normal, recheck keyless entry system circuit as follows.

1) Substitute a known-good door lock controller.
2) Register key code referring to "Transmitter Code Registration Procedure" in this section.
3) Recheck keyless entry system operation inspection.

1. Door lock controller

Terminal	Wire	Circuit	Specification	Condition
G11-7	GRN/YEL	Hazard waning signal circuit (right side)	Figure "A"	Push "LOCK" button on transmitter once.
			Figure "B"	Push "UNLOCK" button on transmitter once.
			Figure "C"	Push "LOCK" button on transmitter twice within 2 seconds.
G11-8	GRN/RED	Hazard waning signal circuit (left side)	Figure "A"	Push "LOCK" button on transmitter once.
			Figure "B"	Push "UNLOCK" button on transmitter once.
			Figure "C"	Push "LOCK" button on transmitter twice within 2 seconds.
G11-15	BRN/RED	Door switch & interior light circuit	Figure "D"	Fulfill the following conditions. • All door is close. • Interior light switch is in middle position. • 20 seconds after pushing "UNLOCK" button on transmitter once.

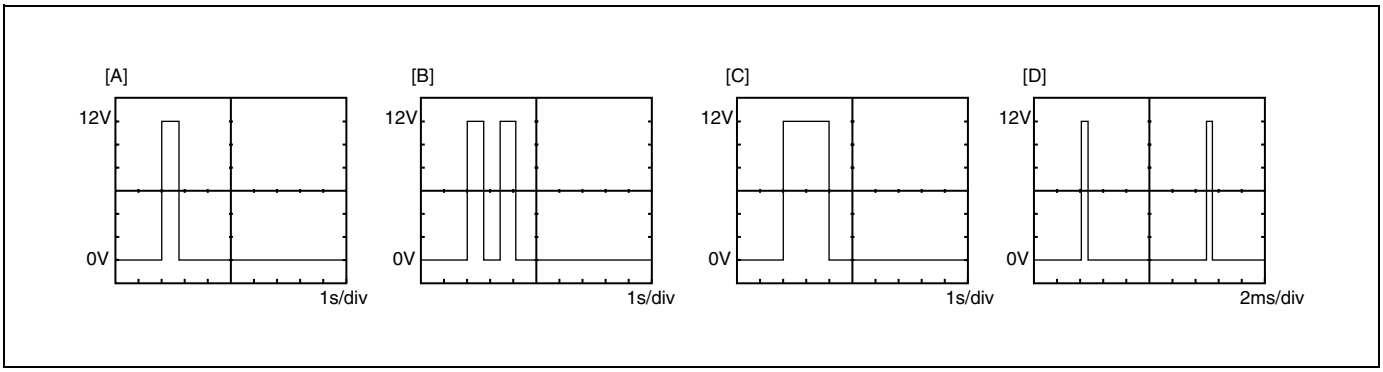

[A]:	Figure “A”
[B]:	Figure “B”
[C]:	Figure “C”
[D]:	Figure “D”

Replacement of Transmitter Battery

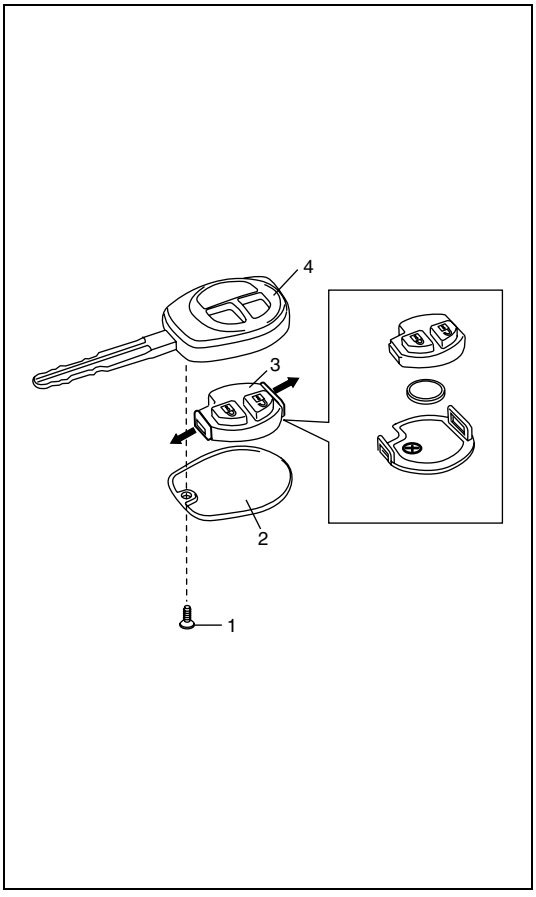

If transmitter becomes unreliable, replace transmitter battery as follows.

1) Remove screw (1) and transmitter cover (2).
2) Remove transmitter (3) from transmitter holder (4).

CAUTION:
Use care not to allow grease or dirt to be attached on the printed circuit board and the battery.

3) Unhook tabs and remove transmitter.
4) Replace the battery (lithium disc-type CR1616 or equivalent battery) so its + terminal faces “+” mark on transmitter.
5) Fit together transmitter (3) and install it into transmitter holder (4).
6) Install transmitter cover (2) and screw (1).
7) Make sure the door locks can be operated with transmitter.

NOTE:

- **To prevent theft, be sure to break the transmitter before discarding it.**
- **Dispose of the used battery properly according to applicable rules or regulations. Do not dispose of lithium batteries with ordinary household trash.**

Transmitter Code Registration Procedure

NOTE:

- **Three transmitter codes can be registered at the same time.**
- **When the fourth transmitter code is registered, the oldest one will be cleared automatically.**

If transmitter or door lock controller is replaced with new one, register code as follows.

1) Make sure that all doors are closed and ignition key is out of ignition key cylinder
2) Open driver side door.
3) Turn ignition switch to ON position, and then remove ignition key from ignition key cylinder within 10 seconds after that.

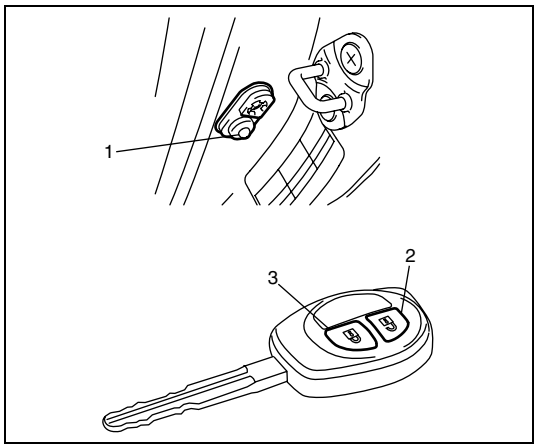

4) Push and release driver side door switch (1) at 3 times by hand within 20 seconds after removing ignition key from ignition key cylinder.
5) Turn ignition switch to ON position, and then remove ignition key from ignition key cylinder within 10 seconds after that.
6) Push “UNLOCK” button (2) on transmitter (3) and confirm that all doors are operated from lock to unlock.
   With this, code registration is completed.

Power Door Mirror Switch Inspection

1) Disconnect negative cable at battery.
2) Pull out mirror switch from door trim.
3) Disconnect mirror switch lead wire coupler.

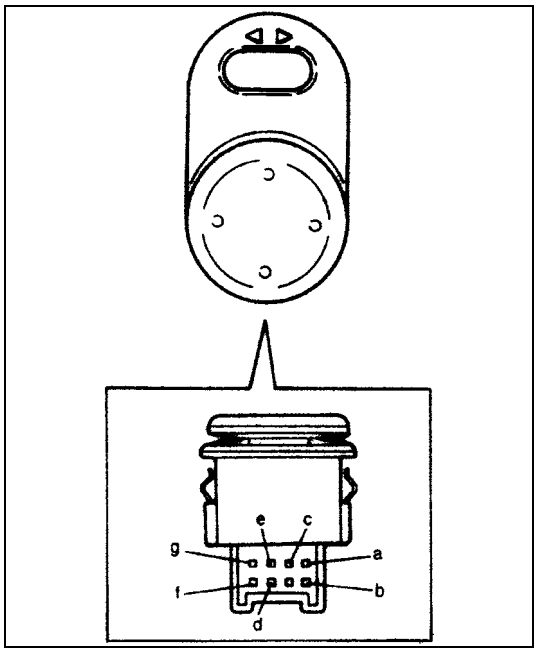

4) Check continuity between terminals at each switch position.
   If any correct continuity is not obtained, replace mirror switch.

Power door mirror switch specification

L / R	a	b	c	d / e	g / f
UP	○	○	○	○	
DOWN	○	○	○	○	
LEFT	○	○	○		○
RIGHT	○	○	○		○

Power Door Mirror Actuator Removal and Installation

REMOVAL

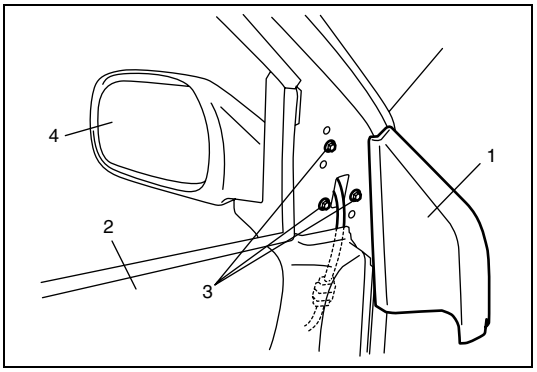

1) Remove door garnish (1) and front door trim (2) from door.
2) Disconnect door mirror coupler.
3) Remove door mounting bolts (3), and remove door mirror assembly (4).

INSTALLATION

Reverse removal procedure to install door mirror assembly noting the following construction.

- Be careful not to pinch harness between door and door mirror.
- Connect door mirror connector securely.

Power Door Mirror Actuator Inspection

CAUTION:
Never short positive and negative probes to prevent wire harness from damage.

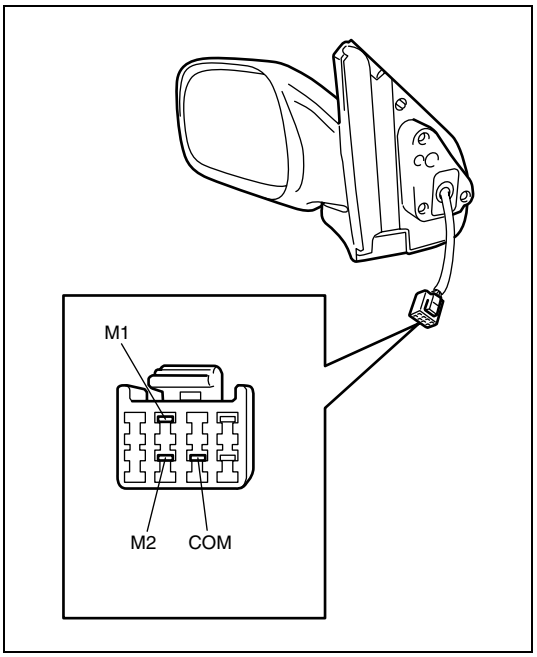

Check that door mirror operates properly when battery voltage is applied to connector terminals as follows.

- Connect battery positive and negative terminal to the door mirror terminal shown below.
  If it does not follow the table's operation, replace door mirror assembly.

Power door mirror actuator specification

Terminal / Operation	COM	M1	M2
Up	⊖	⊕	
Down	⊕	⊖	
Left	⊖		⊕
Right	⊕		⊖

Door Mirror Heater Switch Inspection

The door mirror heater switch is integral with rear defogger switch.
Therefore, in the case of door mirror heater equipped vehicle, if rear defogger is operated with rear defogger switch, door mirror heater also operates at the same time.
For the inspection procedure of door mirror heater switch, refer to "Rear Defogger Switch Inspection" in Section 1A.

Mirror Heater Inspection

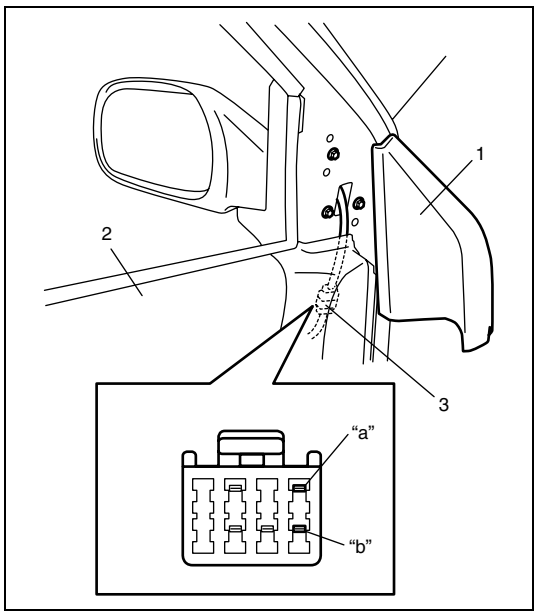

1) Remove door garnish (1) and front door trim (2).
2) Disconnect door mirror coupler (3).
3) Check for continuity between terminals "a" and "b".
   If there is no continuity replace outside mirror.

Seat Heater System Inspection

Seat heater switch

1) Confirm that ignition switch is in OFF position.
2) Remove parking lever garnish on center console box.
3) Pull out seat heater switch from parking lever garnish.
4) Disconnect seat heater switch coupler.

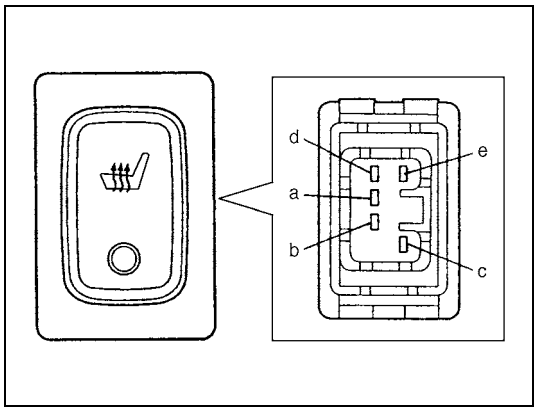

5) Check for continuity between terminals at each switch position as shown below. If check result is not as specified, replace front seat heater switch.

Seat heater switch specification

Position \ Terminal	a	b	c	d	e
FREE		○—○—○		○—○—○	
PUSH	○	○—○—○		○—○—○	

Seat back

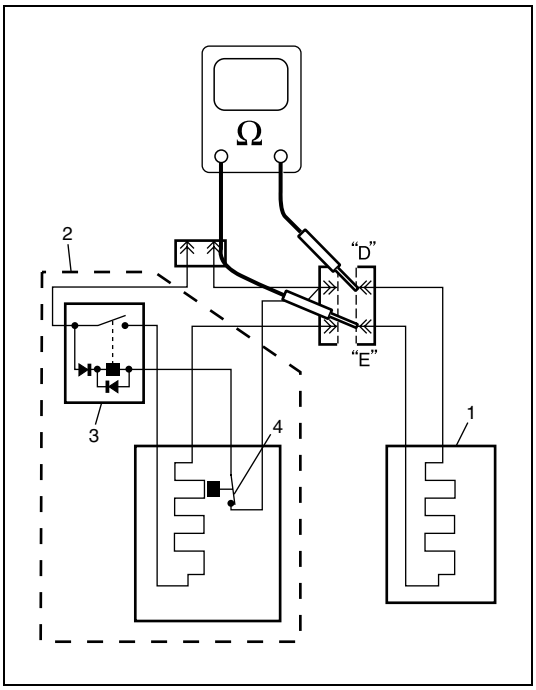

1) Confirm that seat heater switch is in OFF position.
2) Disconnect seat back heater connector under the seat cushion.
3) Check for continuity between terminals "B" and "D" of seat back heater connector.
4) If there is no continuity, replace seat back as assembly.

1. Seat back
2. Seat cushion
3. Relay
4. Bimetal

Seat cushion

The seat cushion heater consists of the heater wire, bimetal, relay and their connecting circuit wirings. Heater malfunction will be caused by damage of one or more of them.
As each part can not be inspected separately, inspect the cushion heater as a system as follows.

Relay switching/heater circuit function

1) Confirm that seat heater switch is in OFF position.
2) Disconnect two connectors of seat heater under the seat cushion.

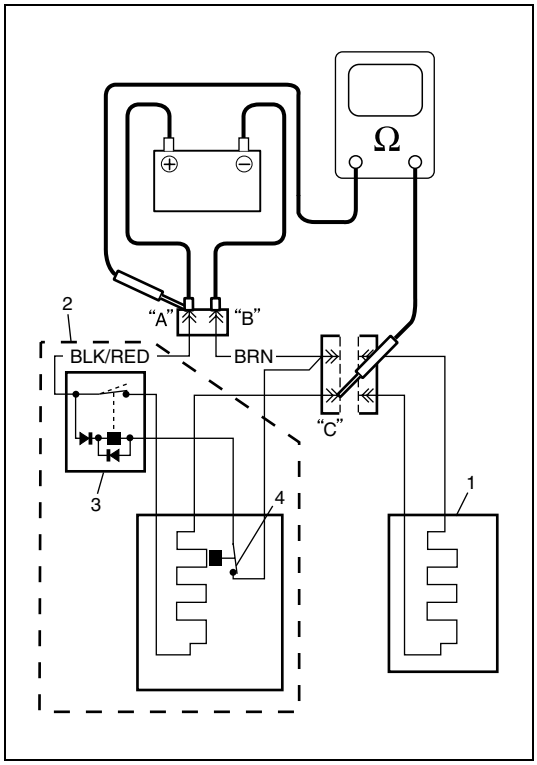

3) Connect battery positive (+) terminal to terminal "A" of seat heater connector and battery negative (–) terminal to terminal "B" of seat heater connector.
4) Check for continuity between seat heater connector terminals "A" and "C".
5) If there is no continuity, replace seat cushion as assembly. Either faulty relay switching or open heater circuit will be the cause of the malfunction.

1.	Seat back
2.	Seat cushion
3.	Relay
4.	Bimetal

Bimetal/relay operation

1) Make sure that seat heater switch is in OFF position.
2) Disconnect seat heater connector (1).
3) Connect ammeter (2) and service wires (3) to seat heater connector as shown in the figure.
   Be sure to use an ammeter that can measure 10 A.

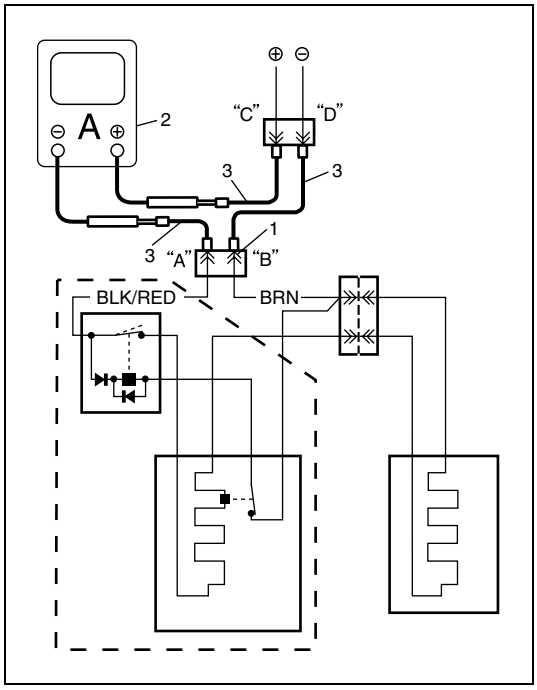

1.	Seat heater connector
2.	Ammeter
3.	Service wire

4) Turn ignition switch to ON position.
5) Operate seat heater by pushing seat heater switch.

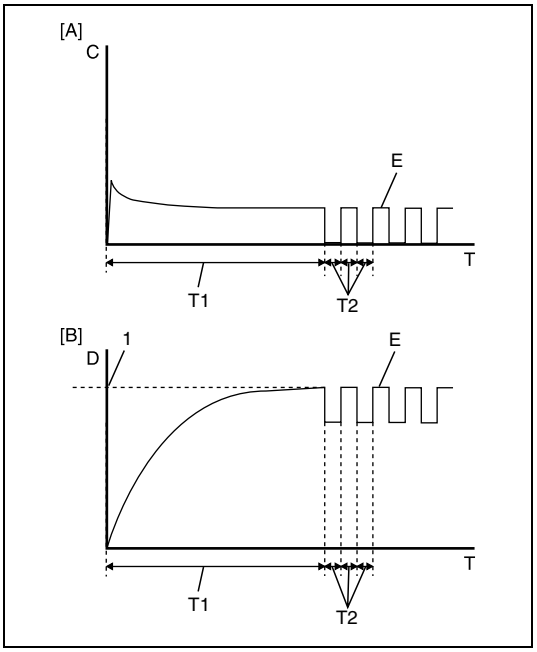

6) Check if the ammeter shows the ON/OFF switching operation of bimetal as shown in the figure.
   If check result is not as specified, replace seat cushion as assembly.

[A]:	Current on ammeter
[B]:	Heater/bimetal temperature
C:	Current
D:	Temperature
E:	Bimetal ON/OFF operation
T:	Time
T1:	Heating time at laboratory (Approx. 10 minutes) (Will vary depending on ambient/seat temperature)
T2:	Approx. 15 seconds
1.	Approx. 42°C (108°F) at bimetal (Will be lower on seat surface)

Recommended measurement condition
Room temperature: 20°C (68°F)

Information Display Removal and Installation

REMOVAL

1) Disconnect negative (–) cable at battery.

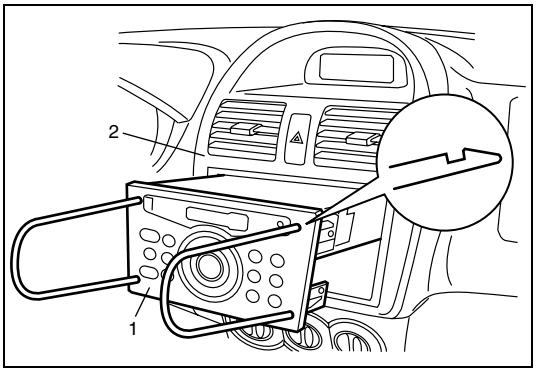

2) Remove audio unit (1) from center upper garnish (2) as shown.

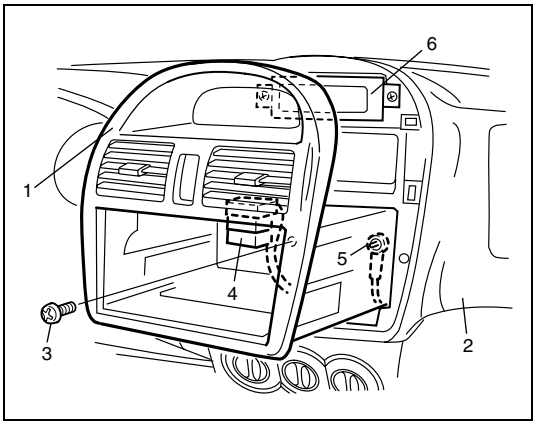

3) Remove center upper garnish (1) from instrument panel (2) by removing screw (3), audio unit connector (4) and antenna wiring (5).
4) Remove display unit (6) from instrument panel (2) by removing 2 screws.
5) Disconnect connector from display unit.

INSTALLATION

Reverse removal procedure to install display unit.

Outside Air Temperature Sensor Removal and Installation

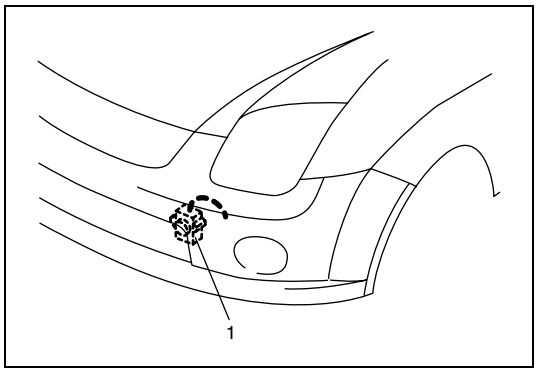

REMOVAL

1) Disconnect negative (–) cable at battery.
2) Remove outside air temperature sensor (1) from front bumper.
3) Disconnect outside air temperature sensor connector.

INSTALLATION

Reverse removal procedure to install outside air temperature sensor.

Outside Air Temperature Sensor Inspection

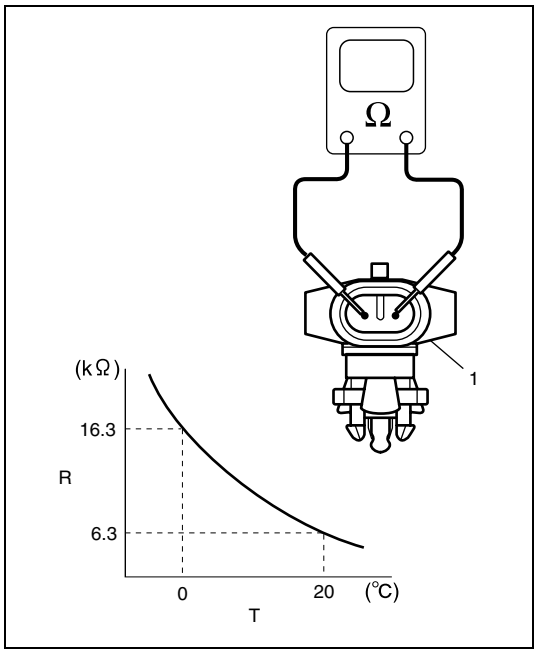

Immerse temperature sensing part of outside air temperature sensor (1) in ice water and measure resistance between sensor terminals while heating water gradually.

R. Resistance
T. Temperature

SECTION 8G

IMMOBILIZER CONTROL SYSTEM

WARNING:

For vehicles equipped with a Supplemental Restraint (Air Bag) System

- **Service on and around the air bag system components or wiring must be performed only by an authorized SUZUKI dealer. Refer to "System Components and Wiring Location View" under "General Description" in air bag system section in order to confirm whether you are performing service on or near the air bag system components or wiring. Please observe all WARNINGS and "Service Precautions" under "On-Vehicle Service" in air bag system section before performing service on or around the air bag system components or wiring. Failure to follow WARNINGS could result in unintentional activation of the system or could render the system inoperative. Either of these two conditions may result in severe injury.**
- **Technical service work must be started at least 90 seconds after the ignition switch is turned to the "LOCK" position and the negative cable is disconnected from the battery. Otherwise, the system may be activated by reserve energy in the Sensing and Diagnostic Module (SDM).**

CONTENTS

General Description 8G-2
Immobilizer Control System Introduction 8G-2
Immobilizer Control System Wiring Circuit Diagram 8G-3
On-Board Diagnostic System Description 8G-4
Diagnosis 8G-5
Precautions in Diagnosing Troubles 8G-5
ECM 8G-5
Immobilizer Control Module..... 8G-5
Intermittent troubles..... 8G-5
Immobilizer Control System Check 8G-6
DTC Check..... 8G-7
Immobilizer Control Module..... 8G-7
ECM 8G-7
DTC Table 8G-8
Table A – Immobilizer Indicator Lamp Check (Immobilizer Indicator Lamp Does Not Light at Ignition Switch ON) 8G-9
Table B – Immobilizer Indicator Lamp Check (Immobilizer Indicator Lamp Remains ON After Engine Starts) 8G-10
Table C – Communication between Suzuki Scan Tool and Immobilizer Control Module is Not Established 8G-11
DTC11/32: Transponder Code Not Matched 8G-12
DTC31: Transponder Code Not Registered..... 8G-13
DTC12: Fault in Immobilizer Control Module 8G-13
DTC13: No Transponder Code Transmitted or Coil Antenna Opened/ Shorted 8G-14
DTC21: ECM/Immobilizer Control Module Code Not Matched (Immobilizer Control Module Side) 8G-15
DTC P1623: ECM/Immobilizer Control Module Code Not Matched (ECM Side).....8G-15
DTC P1620: ECM/Immobilizer Control Module Code Not Registered.....8G-15
DTC P1622: Fault in ECM 8G-15
DTC22: Ignition Switch Circuit Open/ Short 8G-16
DTC23: No ECM/Immobilizer Control Module Code Transmitted From ECM or DLC Circuit Opened/Shorted 8G-17
DTC P1621: No ECM/Immobilizer Control Module Code Transmitted From Immobilizer Control Module or DLC Circuit Opened/Shorted 8G-17
Inspection of ECM, Immobilizer Control Module and Its Circuit 8G-19
On-Vehicle Service 8G-20
Precautions in Handling Immobilizer Control System 8G-20
Immobilizer Control Module Removal and Installation.....8G-21
How to Register Ignition Key.....8G-22
Procedure After Immobilizer Control Module Replacement 8G-23
Procedure After ECM Replacement.....8G-24
Special Tool.....8G-24

General Description

Immobilizer Control System Introduction

The immobilizer control system designed to prevent vehicle burglar consists of following components.

- Engine Control Module (ECM)
- Immobilizer Control Module (1) with coil antenna
- Ignition key (2) with built-in transponder
- Immobilizer indicator lamp (for self-diagnosis function)

Operation of this system is as follows.

i) Each ignition key has its own code (Transponder code) stored in memory. When the ignition switch is turned ON, Immobilizer Control Module tries to read the Transponder code through the coil antenna installed onto the steering lock assembly.

ii) Immobilizer Control Module compares the Transponder code read in Step (i) and that registered in Immobilizer Control Module and checks if they match.

iii) When it is confirmed that two Transponder codes match each other as described above, Immobilizer Control Module and ECM check if ECM/Immobilizer Control Module codes registered in them respectively match.

iv) Only when it is confirmed that ECM/Immobilizer Control Module codes match, the engine starts running. If Transponder codes in Step (ii) or ECM/Immobilizer Control Module codes in Step (iii) do not match, ECM will stop operation of the injector and ignition of spark plug.

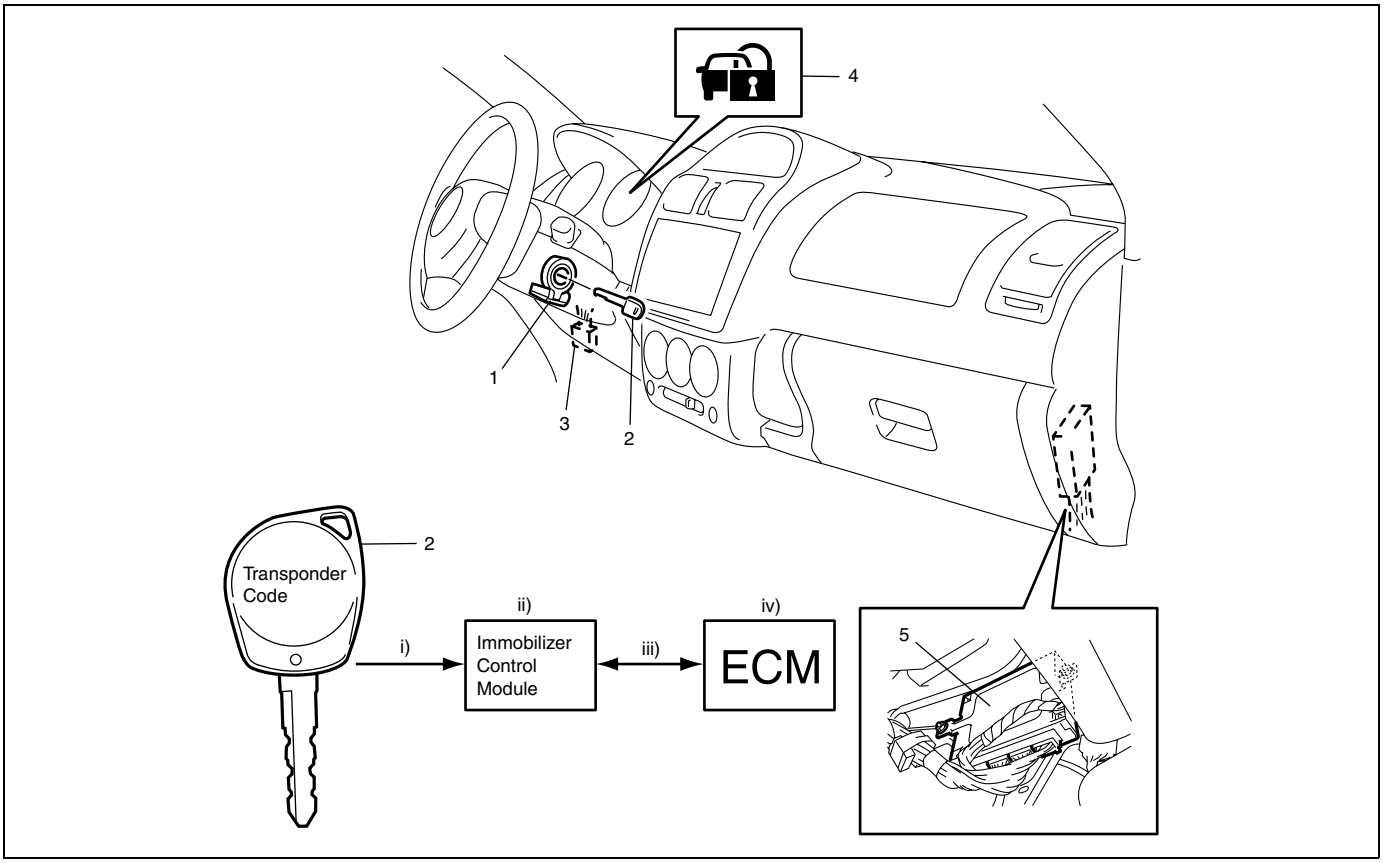

3.	Data link connector (DLC)
4.	Immobilizer indicator lamp
5.	ECM

NOTE:

For vehicle with a right-hand steering wheel, position of each component is symmetrical.

Immobilizer Control System Wiring Circuit Diagram

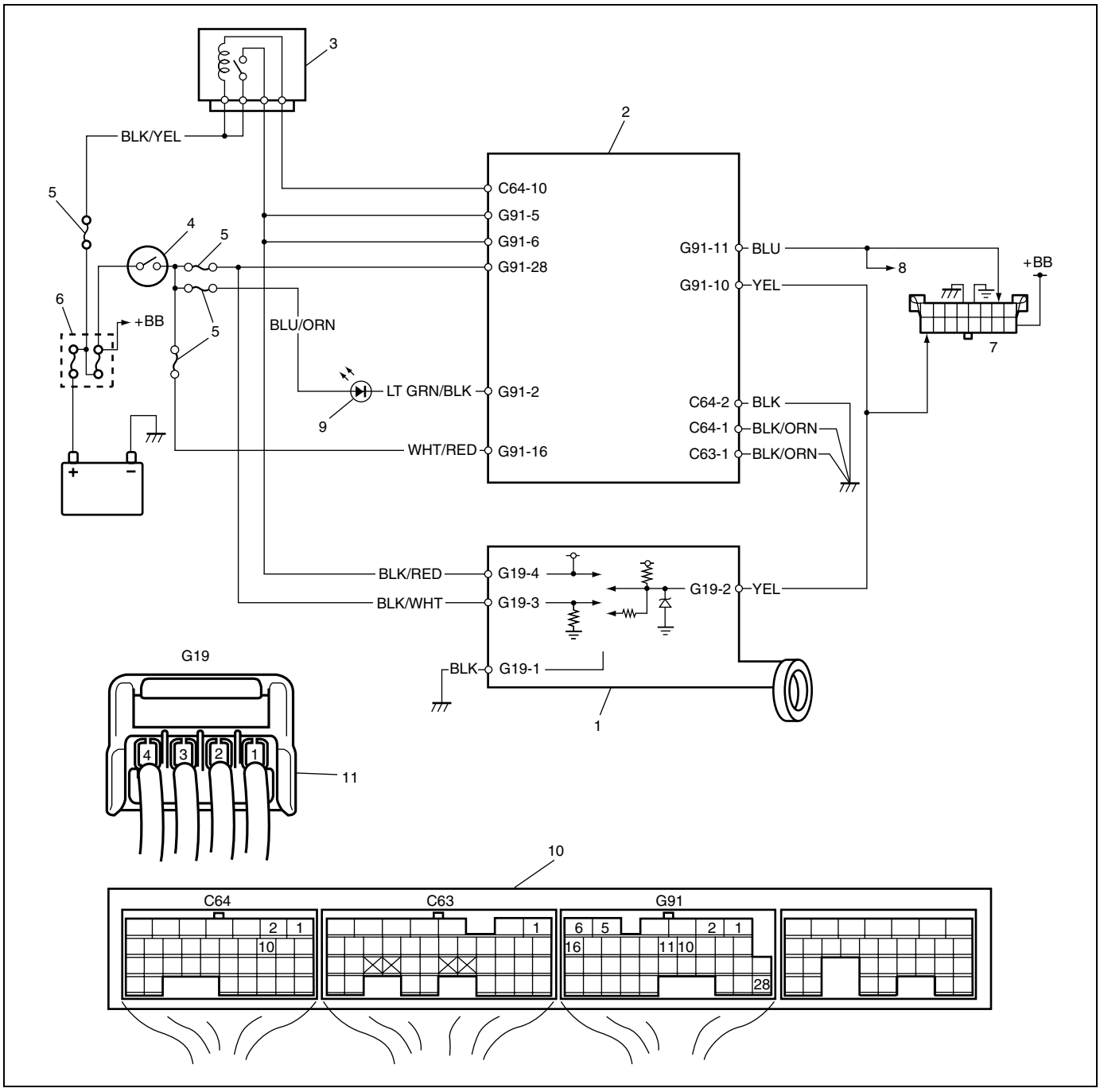

1. Immobilizer Control Module	5. Fuse	9. Immobilizer indicator lamp
2. ECM	6. Main fuse	10. ECM connector (viewed from harness side)
3. Main relay	7. Data link connector	11. Immobilizer Control Module connector (viewed from harness side)
4. Ignition switch	8. To ABS control module, SDM and TCM	

On-Board Diagnostic System Description

Immobilizer Control Module and ECM diagnose troubles which may occur in the area including the following parts when the ignition switch is ON.

ECM:

- ECM/Immobilizer Control Module code
- Serial data link circuit
- ECM

Immobilizer Control Module:

- Transponder code
- Coil antenna
- ECM/Immobilizer Control Module code
- Serial data link circuit
- Immobilizer Control Module
- Ignition signal

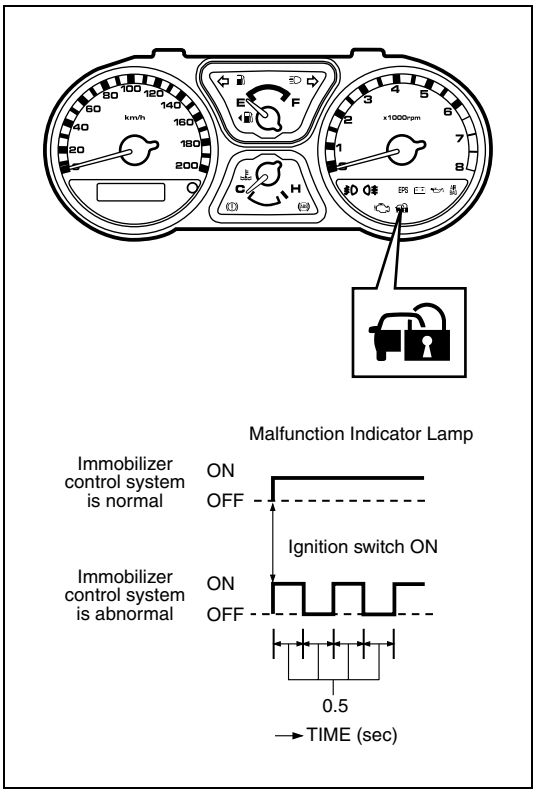

With the ignition switch turned ON (but the engine at stop) regardless of the condition of the engine and emission control system, ECM indicates whether a trouble has occurred in the immobilizer control system or not by causing the immobilizer indicator lamp to flash or turn ON.
Immobilizer indicator lamp is ON:
No trouble exists in the immobilizer control system.
Immobilizer indicator lamp is flashing:
ECM or Immobilizer Control Module has detected some trouble in the immobilizer control system.

NOTE:

As soon as the ignition switch is turned ON, ECM and Immobilizer Control Module diagnose if a trouble has occurred in the immobilizer control system. While the diagnosis is being made, the immobilizer indicator lamp stays ON and if the diagnosis result is "abnormal", it immediately changes to flashing but if the result is "normal", it remains ON. To complete diagnosis, it takes about three seconds at maximum.

When ECM and Immobilizer Control Module detects a trouble, it stores DTC in ECM and Immobilizer Control Module memories respectively.

DTCs stored in memory of each controller (Immobilizer Control Module and ECM) can be read by using the procedure described in "DTC Check" in this section.

Diagnosis

Precautions in Diagnosing Troubles

ECM

- Before identifying diagnostic trouble code indicated through Suzuki Scan Tool, don't disconnect couplers from ECM, battery cable from battery, ECM ground wire harness from engine.
  Such disconnection will clear trouble codes for engine and emission control system and immobilizer control system stored in memory of ECM.
- Take a note of diagnostic trouble code indicated first.

Immobilizer Control Module

- Take a note of diagnostic trouble code indicated first.

Intermittent troubles

- There is case where Suzuki Scan Tool indicates a diagnostic trouble code representing a trouble which occurred only temporarily and has gone. In such case, good parts may be replaced unnecessarily. To prevent such replacement, be sure to follow instructions given below during performance of “Immobilizer Control System Check”.
  – When trouble can be identified, it is not an intermittent one:
    Check coil antenna, ignition key, wires and each connection and if they are all in good condition, substitute a known-good ECM and recheck.
  – When trouble can not be identified but Suzuki Scan Tool indicate a trouble code:
    Diagnose trouble by using that code No. and if ignition key, coil antenna, wires and each connection are all in good condition, turn OFF ignition switch and then ON.
- Then, check what Suzuki Scan Tool indicates. Only when they indicate trouble code again, substitute a known-good ECM or Immobilizer Control Module and check again.
  If they do not indicate any trouble code but normal code, it means that an intermittent trouble did occur and has gone. In this case, check wires and connections carefully again.
- When checking for continuity, be careful not to damage terminal. Damage of terminal might cause irregular contact. As a result of the irregular contact, immobilizer control system might fail to operate properly.

Immobilizer Control System Check

Step	Action	Yes	No
1	1) Check immobilizer indicator lamp while ignition switch is ON (but without starting engine). See Fig. 1. Does immobilizer indicator lamp flash?	Go to Step 3.	If immobilizer indicator lamp remains ON, go to Step 2. If immobilizer indicator lamp remains OFF, go to "Table A – Immobilizer Indicator Lamp Check (Immobilizer Indicator Lamp Does Not Light at Ignition Switch ON)" in this section.
2	1) Check DTC stored in ECM referring to "Immobilizer Control Module" under "DTC Check" in this section. Is there any DTC(s)?	Go to "Table B – Immobilizer Indicator Lamp Check (Immobilizer Indicator Lamp Remains ON After Engine Starts)" in this section.	Immobilizer control system is in good condition.
3	1) Check DTC stored in Immobilizer Control Module referring to "ECM" under "DTC Check" in this section. Is there any DTC(s)?	Go to flow table for DTC No.	Go to Step 4.
4	1) Check DTC stored in ECM referring to "Immobilizer Control Module" under "DTC Check" in this section. Is there any DTC(s) for immobilizer control system?	Go to flow table for DTC No.	Substitute a known-good ECM and recheck. See NOTE below.

NOTE:

After replacing with a known-good ECM, register ECM/Immobilizer Control Module code in ECM by performing procedure described in "Procedure After ECM Replacement" in this section.

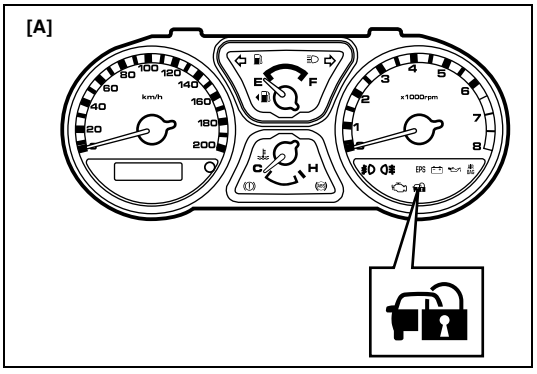

[A]: Fig. 1 for Step 1

DTC Check

Immobilizer Control Module

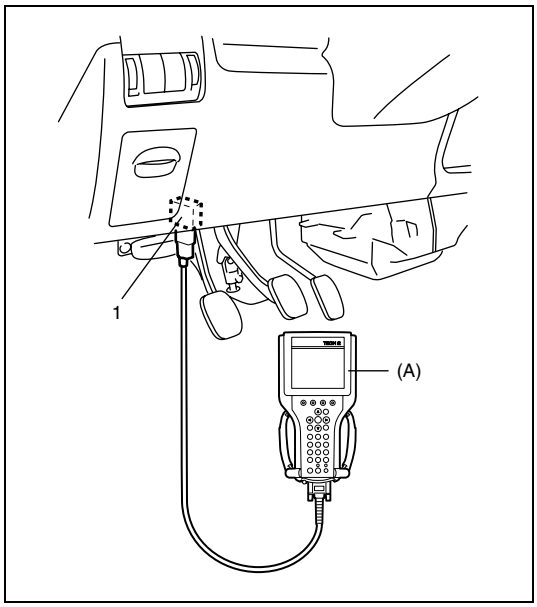

1) Turn ignition switch OFF.
2) After setting program card to Suzuki Scan Tool, connect it to data link connector (DLC) (1) located on underside of instrument panel at driver's seat side.

Special tool
(A): Suzuki Scan Tool

3) Turn ignition switch ON.
4) Read DTC stored in Immobilizer Control Module according to instructions displayed on Suzuki Scan Tool, and print it or write it down. For further details, refer to operator's manual for Suzuki Scan Tool.
   If communication between Suzuki Scan Tool and immobilizer control module is not possible, go to "Diagnostic Flow Table C".
5) After completing the check, turn ignition switch OFF and disconnect Suzuki Scan Tool from data link connector (DLC).

ECM

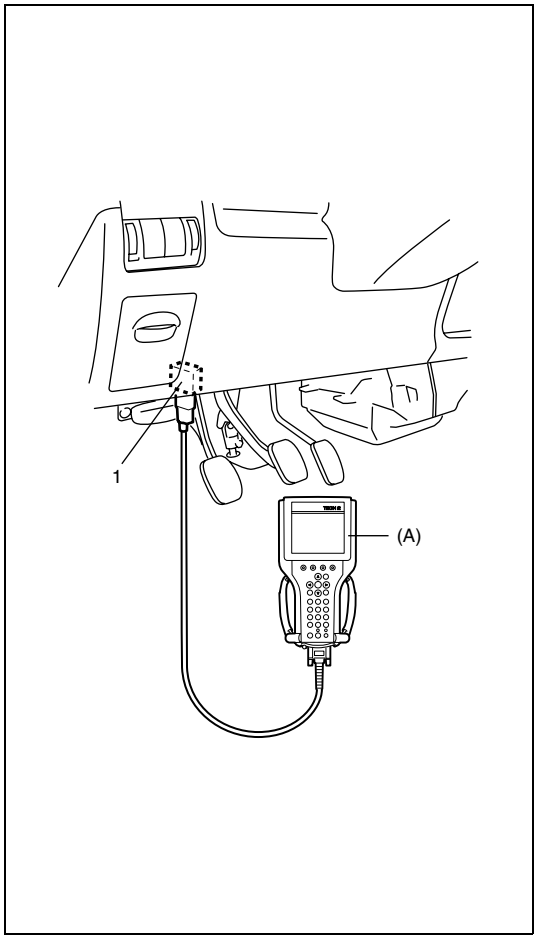

1) Turn ignition switch OFF.
2) After setting program card to Suzuki Scan Tool, connect it to data link connector (DLC) (1) located on underside of instrument panel at driver's seat side.

Special tool
(A): Suzuki Scan Tool

3) Turn ignition switch ON.
4) Read DTC stored in ECM according to instructions displayed on Suzuki Scan Tool and print it or write it down. For further details, refer to operator's manual for Suzuki Scan Tool.
   If communication between Suzuki Scan Tool and ECM is not possible, check if Suzuki Scan Tool is communicable by connecting it to ECM in another vehicle. If communication is possible in this case, Suzuki Scan Tool is in good condition. Then check data link connector and serial data line (circuit) in the vehicle with which communication was not possible.

NOTE:

If ECM detects a trouble in both engine and emission control system and immobilizer control system, Suzuki Scan Tool indicates trouble codes of both systems using "Engine" menu of the application.

5) After completing the check, turn ignition switch OFF and disconnect Suzuki Scan Tool from data link connector (DLC).

DTC Table

Immobilizer Control Module

DTC (indicated on Suzuki Scan Tool)	Diagnostic Area	Diagnosis
NO DTC	–	This code appears when none of the other codes are identified.
11	Transponder code	Perform diagnosis corresponding to each code.
31		
32		
12	Immobilizer Control Module	
13	Coil antenna or ignition key with built-in transponder	
21	ECM/Immobilizer Control Module code	
22	Ignition switch circuit	
23	Serial data link circuit	

ECM

DTC (indicated on Suzuki Scan Tool)	Diagnostic Area	Diagnosis
NO DTC	–	This code appears when it is confirmed that none of other trouble codes is set for immobilizer control system or engine and emission control system.
P1623	ECM/Immobilizer Control Module code	Perform diagnosis corresponding to each code.
P1620		
P1622	ECM	
P1621	Serial data link wire	

Table A – Immobilizer Indicator Lamp Check (Immobilizer Indicator Lamp Does Not Light at Ignition Switch ON)

Wiring Diagram

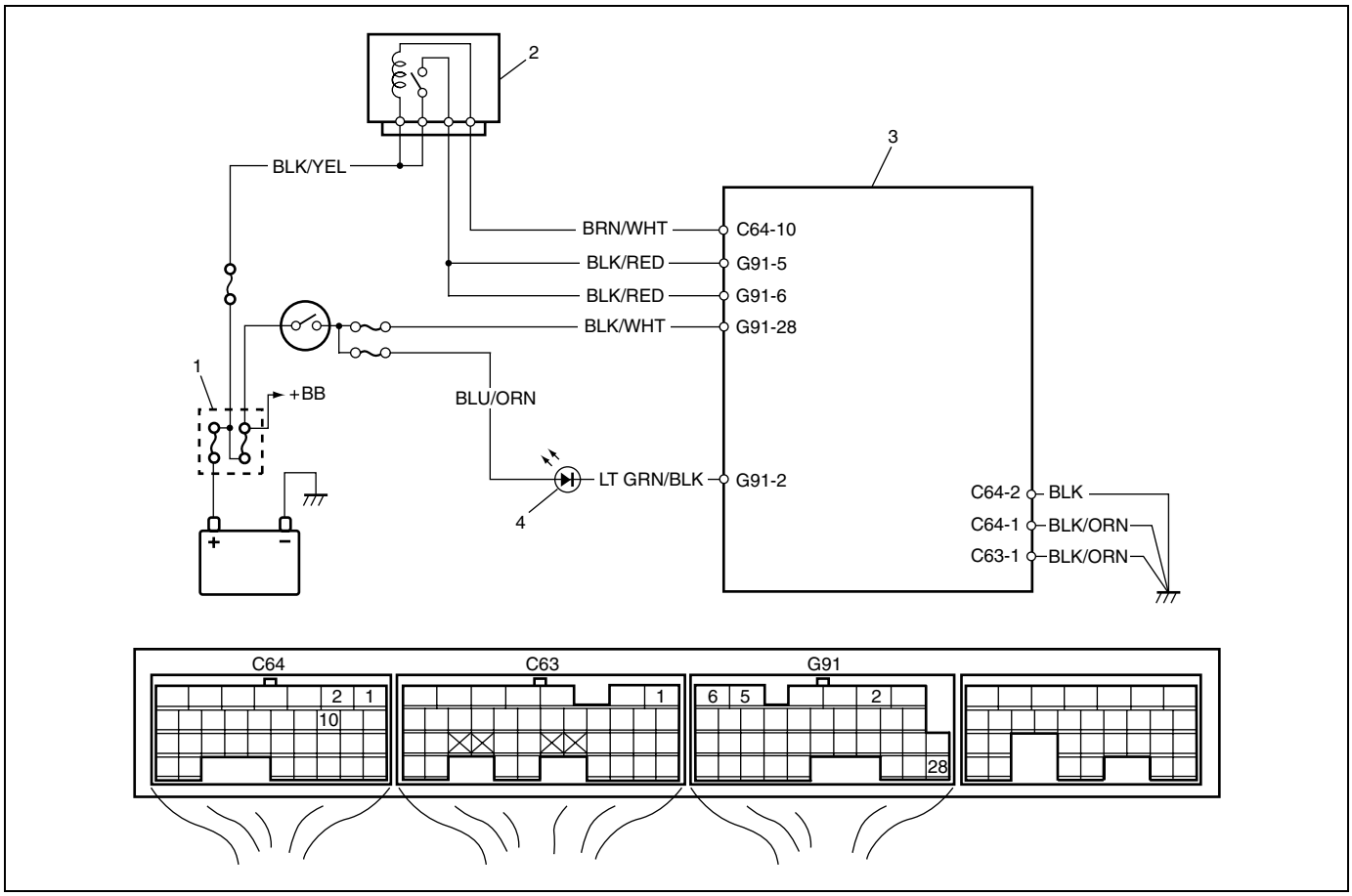

1. Main fuse	2. Main relay	3. ECM	4. Immobilizer indicator lamp

Troubleshooting

Step	Action	Yes	No
1	1) Turn ignition switch ON. Do other indicator/warning lights in combination meter come ON?	Go to Step 2.	"IG" fuse blown, main fuse blown, ignition switch malfunction, "BLK/WHT" circuit between "IG" fuse and combination meter or poor coupler connection at combination meter
2	1) Turn ignition switch OFF and disconnect connectors from ECM. 2) Check for proper connection to ECM at terminal G91-2. 3) If OK, then using service wire, ground terminal G91-2 in connector disconnected. Does immobilizer indicator lamp turn on at ignition switch ON?	Substitute a known-good ECM and recheck.	Immobilizer indicator lamp (LED) faulty or "LT GRN/BLK" wire circuit open

Table B – Immobilizer Indicator Lamp Check (Immobilizer Indicator Lamp Remains ON After Engine Starts)

Wiring Diagram

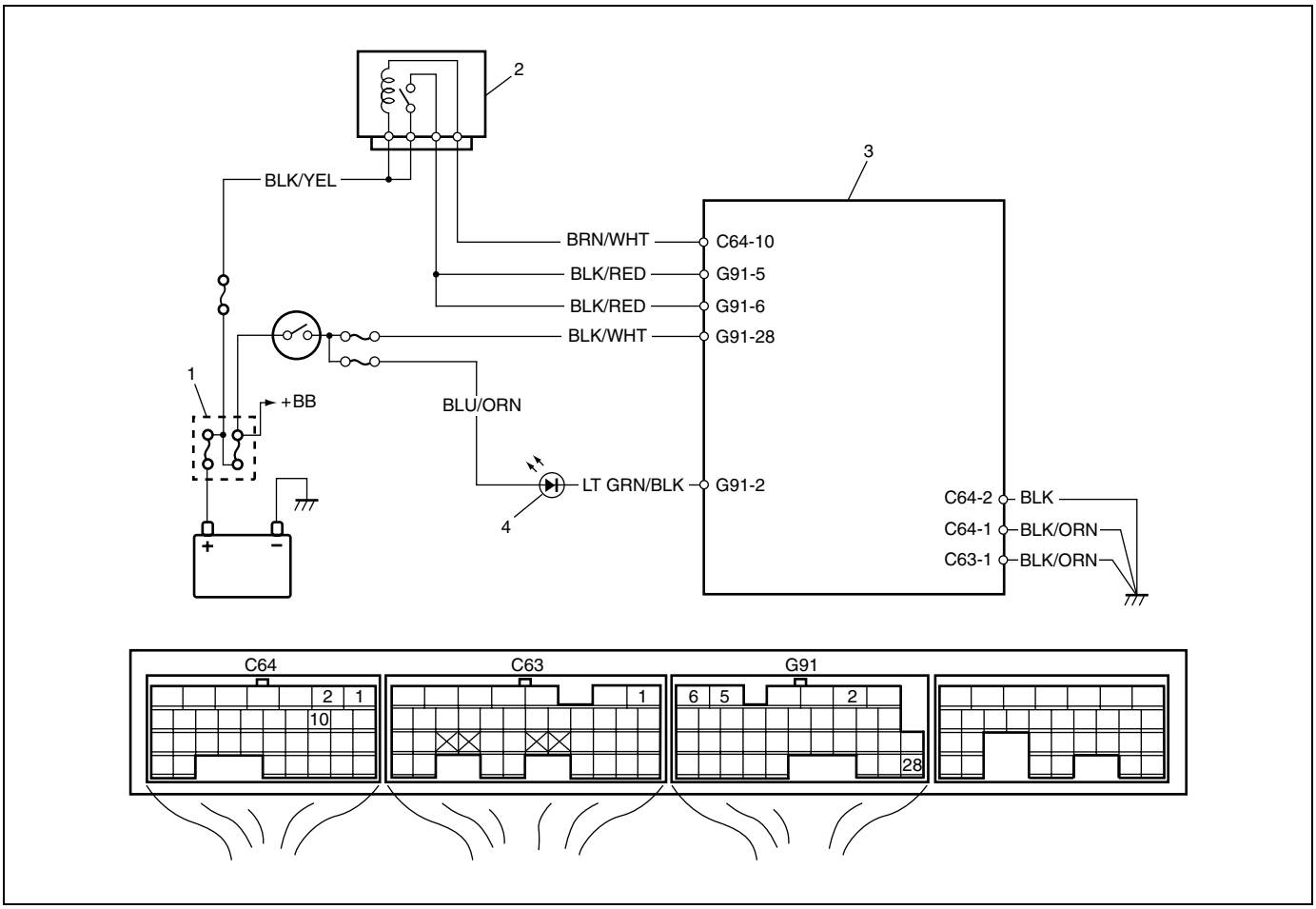

1. Main fuse	2. Main relay	3. ECM	4. Immobilizer indicator lamp

Troubleshooting

Step	Action	Yes	No
1	1) With ignition switch OFF, disconnect couplers from ECM. Does immobilizer indicator lamp turn ON at ignition switch ON?	"LT GRN/BLK" wire shorted to ground circuit	Substitute a known-good ECM and recheck.

Table C – Communication between Suzuki Scan Tool and Immobilizer Control Module is Not Established

Wiring Diagram

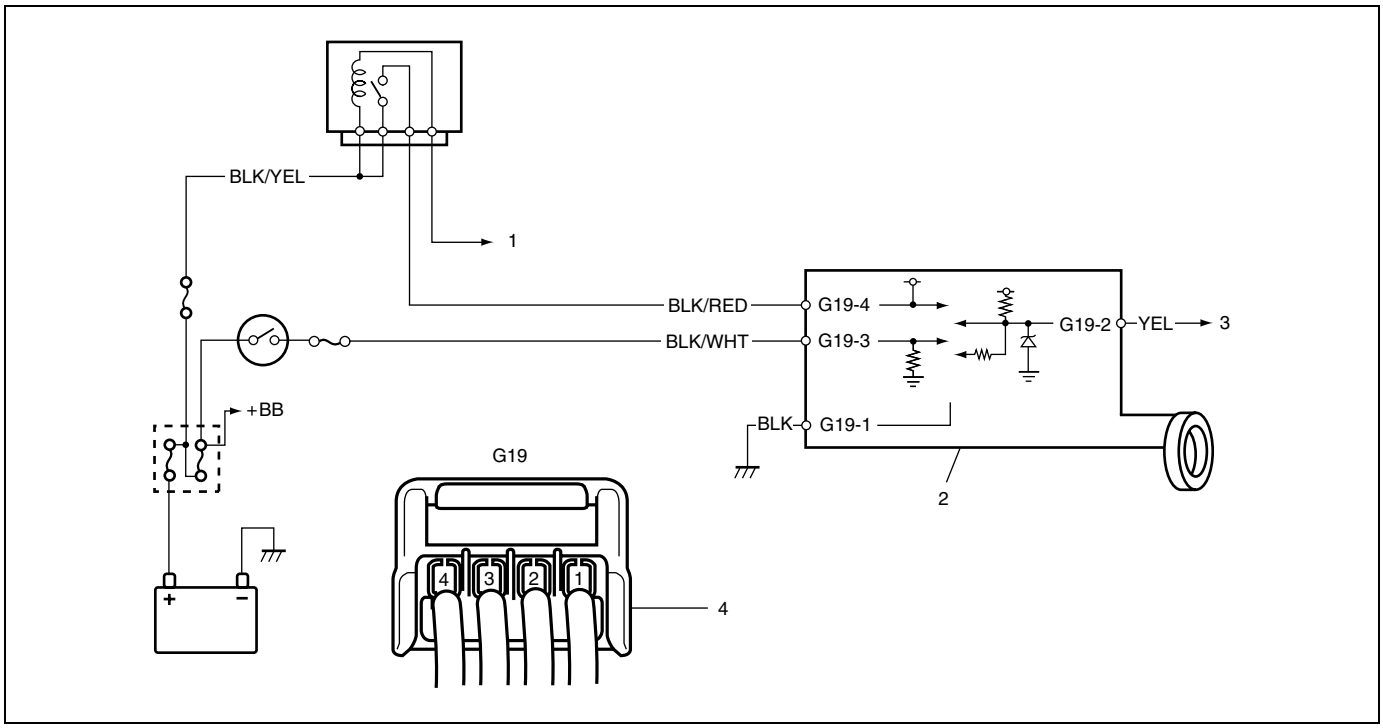

1. To ECM	2. Immobilizer control module	3. To #9-pin in DLC	4. Immobilizer Control Module connector (viewed from harness side)

Troubleshooting

NOTE:

Before troubleshooting, make sure if Suzuki Scan Tool is free from any malfunction and if correct PC card is used. Also, make sure if Suzuki Scan Tool is properly connected to DLC.

Step	Action	Yes	No
1	Check voltage between G19-4 and body ground with ignition switch turned ON. See Fig. 1. Is it 10 – 14 V?	Go to Step 2.	• "BLK/RED" wire open or short • Fuse blown • Main relay faulty
2	Check voltage between G19-3 and body ground with ignition switch turned ON. See Fig. 2. Is it 10 – 14 V?	Go to Step 3.	• "BLK/WHT" wire open or short • Fuse blown
3	1) Disconnect coupler at Immobilizer Control Module. See Fig. 3. Is there continuity between coupler terminal G19-1 and body ground?	Go to Step 4.	"BLK" wire open

Step	Action	Yes	No
4	Check voltage between "YEL" wire terminal of DLC and body ground with ignition switch ON. Is it 4 – 5 V?	• Poor G19-1, G19-2, G19-3 or G19-4 connection • Poor 9th pin Connection in DLC • Serial data line "YEL" open or short If connections and line are in good condition, substitute Immobilizer Control Module with a known-good Immobilizer Control Module.	"YEL" wire open

NOTE:

After replacing with a known-good Immobilizer Control Module, register ECM/Immobilizer Control Module code in ECM and Transponder code and ECM/Immobilizer Control Module code in Immobilizer Control Module by performing procedure described in "Procedure After Immobilizer Control Module Replacement" in this section.

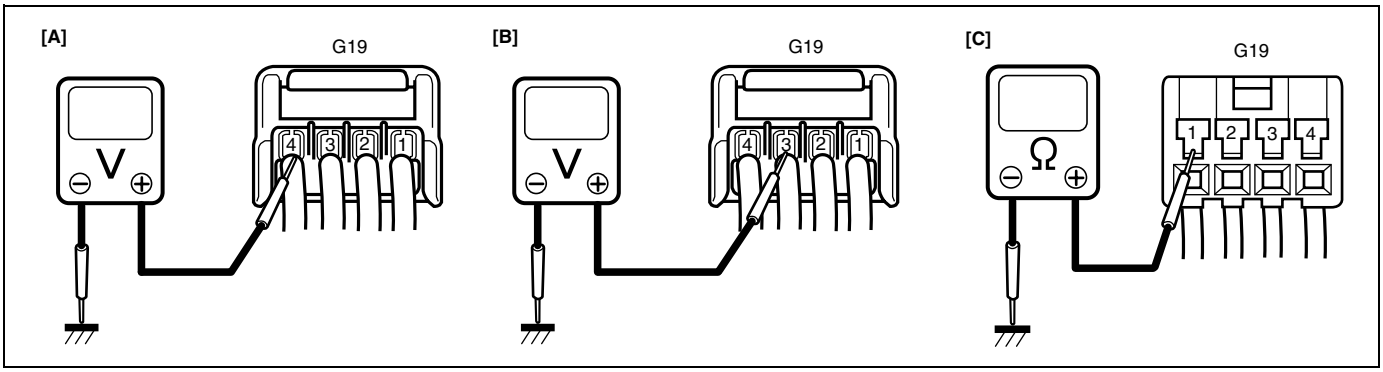

[A]: Fig. 1 for Step 1	[B]: Fig. 2 for Step 2	[C]: Fig. 3 for Step 3

DTC11/32: Transponder Code Not Matched

DTC Detecting Condition

Immobilizer Control Module checks if Transponder code transmitted from ignition key and that registered in Immobilizer Control Module match when ignition switch is ON. If they do not, DTC 11 and/or 32 are set.

Troubleshooting

Register ignition key with built-in transponder by using Suzuki Scan Tool and performing following steps.

1) Register Transponder code in Immobilizer Control Module by performing procedure described in "How to Register Ignition Key".
2) Turn ignition switch OFF, then turn it ON and check that DTC11 and/or 32 are not set.

DTC31: Transponder Code Not Registered

DTC Detecting Condition

Immobilizer Control Module checks if Transponder code transmitted from ignition key and that registered in Immobilizer Control Module match when ignition switch is ON. If there is no Transponder code registered in Immobilizer Control Module, this DTC is set.

Troubleshooting

Register ignition key with built-in transponder by using Suzuki Scan Tool and performing following steps.

1) Register Transponder code in Immobilizer Control Module by performing procedure described in “How to Register Ignition Key”.
2) Turn ignition switch OFF, then turn it ON and check that DTC31 is not set.

DTC12: Fault in Immobilizer Control Module

DTC Detecting Condition

This DTC is set when an internal fault is detected in Immobilizer Control Module.

Troubleshooting

Step	Action	Yes	No
1	1) Ignition switch OFF. 2) Disconnect connectors from Immobilizer Control Module. 3) Check for proper connection to Immobilizer Control Module at all terminals. Are they in good condition?	Substitute a known-good Immobilizer Control Module and recheck. See NOTE below.	Repair or replace.

NOTE:

After replacing with a known-good Immobilizer Control Module, register ECM/Immobilizer Control Module code in ECM and Transponder code and ECM/Immobilizer Control Module code in Immobilizer Control Module by performing procedure described in “Procedure After Immobilizer Control Module Replacement” in this section.

DTC13: No Transponder Code Transmitted or Coil Antenna Opened/Shorted

Wiring Diagram

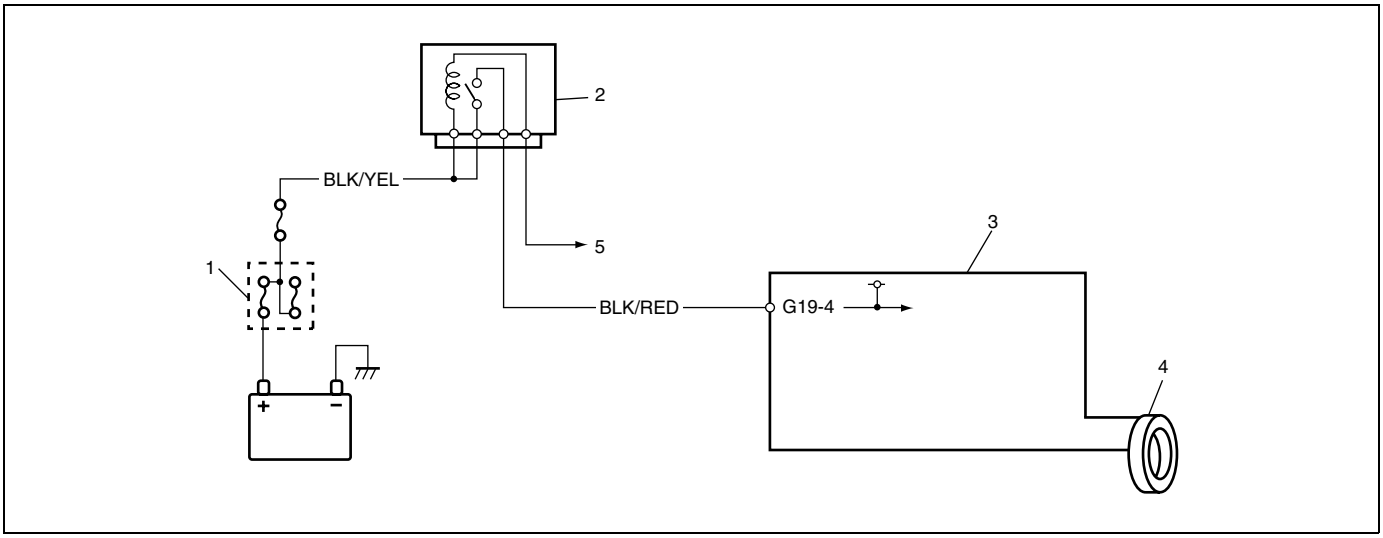

1. Main fuse	2. Main relay	3. Immobilizer Control Module	4. Coil antenna	5. To ECM

DTC Detecting Condition

Immobilizer Control Module energizes the coil antenna when the ignition switch is ON and reads Transponder code from the ignition key. When Immobilizer Control Module cannot read Transponder code from the ignition key even when the coil antenna is energized, this DTC is set.

Troubleshooting

Step	Action	Yes	No
1	Check if shape and color of ignition key are as shown below. • Knob color: Black • Knob shape: See Fig. 1. Is it the original one?	Substitute a known-good Immobilizer Control Module and recheck. See NOTE below.	Replace ignition key with original one and follow "Immobilizer Control System Check" again.

NOTE:

After replacing with a known-good Immobilizer Control Module, register ECM/Immobilizer Control Module code in ECM and Transponder code and ECM/Immobilizer Control Module code in Immobilizer Control Module by performing procedure described in "Procedure After Immobilizer Control Module Replacement" in this section.

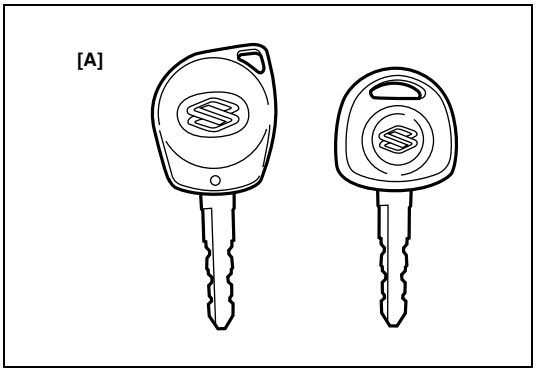

[A]: Fig. 1 for Step 1

DTC21: ECM/Immobilizer Control Module Code Not Matched (Immobilizer Control Module Side)

DTC P1623: ECM/Immobilizer Control Module Code Not Matched (ECM Side)

DTC P1620: ECM/Immobilizer Control Module Code Not Registered

DTC Detecting Condition

- DTC21
  Immobilizer Control Module checks if ECM/Immobilizer Control Module code transmitted from ECM and that registered in Immobilizer Control Module match when ignition switch is ON. If they do not, this DTC is set.
- DTC P1623
  ECM checks if ECM/Immobilizer Control Module code transmitted from Immobilizer Control Module and that registered in ECM match when ignition switch is ON. If they do not, this DTC is set.
- DTC P1620
  ECM checks if code transmitted from Immobilizer Control Module and that registered in ECM match when ignition switch is ON. If there is no ECM/Immobilizer Control Module code registered in ECM, this DTC is set.

Troubleshooting

Perform procedure described in “Procedure After ECM Replacement” in the section.

DTC P1622: Fault in ECM

DTC Detecting Condition

This DTC is set when an internal fault is detected in ECM.

Troubleshooting

Step	Action	Yes	No
1	1) Ignition switch OFF. 2) Disconnect connectors from ECM. 3) Check for proper connection to ECM at all terminals. Are they in good condition?	Substitute a known-good ECM and recheck. See NOTE below.	Repair or replace.

NOTE:

After replacing with a known-good ECM, register ECM/Immobilizer Control Module code in ECM by performing procedure described in “Procedure After ECM Replacement” in this section.

DTC22: Ignition Switch Circuit Open/Short

Wiring Diagram

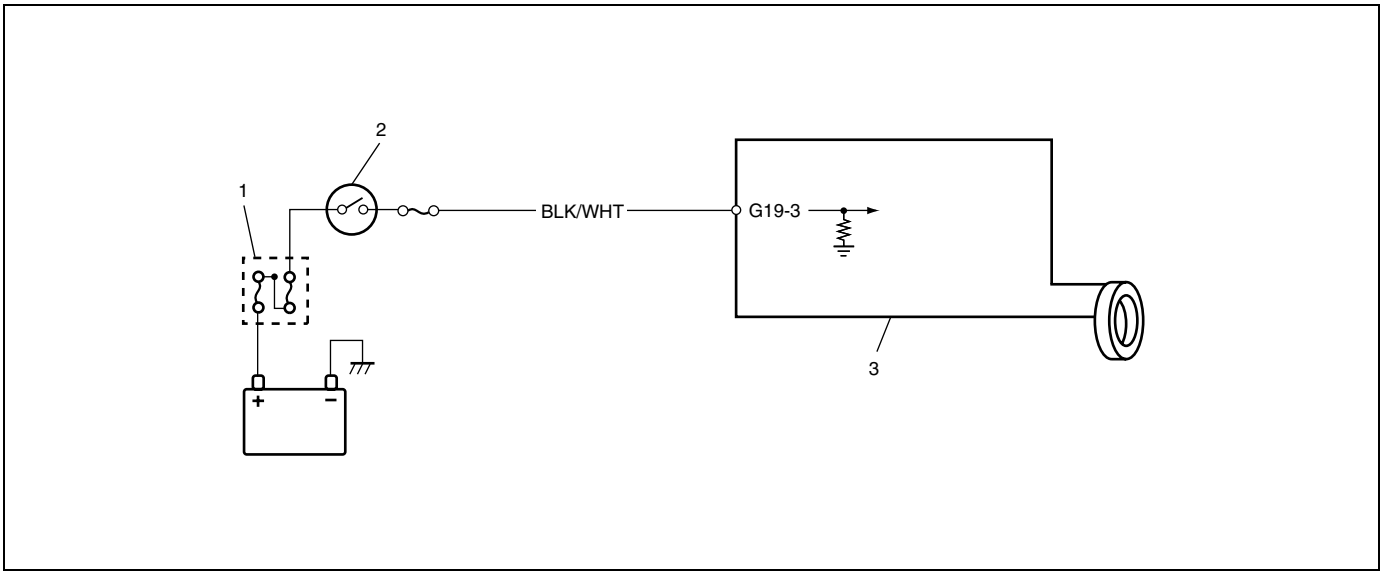

1. Main fuse	2. Ignition switch	3. Immobilizer Control Module

DTC Detecting Condition

Immobilizer Control Module monitors ignition signal when the ignition switch is ON. This DTC is set when no ignition signal input is detected by Immobilizer Control Module.

Troubleshooting

Step	Action	Yes	No
1	Check voltage between Immobilizer Control Module (1) coupler terminal G19-3 and body ground with ignition switch turned ON. See Fig. 1. Is it 10 – 14V?	Poor G19-3 terminal connection. If connection is OK, substitute a known-good Immobilizer Control Module and recheck. See NOTE below.	"BLK/WHT" wire open or short

NOTE:

After replacing with a known-good Immobilizer Control Module, register ECM/Immobilizer Control Module code in ECM and Transponder code and ECM/Immobilizer Control Module code in Immobilizer Control Module by performing procedure described in "Procedure After Immobilizer Control Module Replacement" in this section.

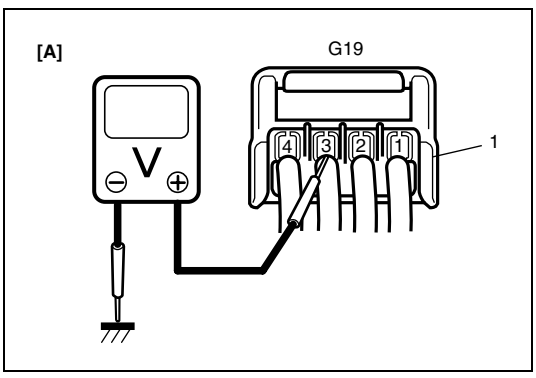

[A]: Fig. 1 for Step 1

DTC23: No ECM/Immobilizer Control Module Code Transmitted From ECM or DLC Circuit Opened/Shorted

DTC P1621: No ECM/Immobilizer Control Module Code Transmitted From Immobilizer Control Module or DLC Circuit Opened/Shorted

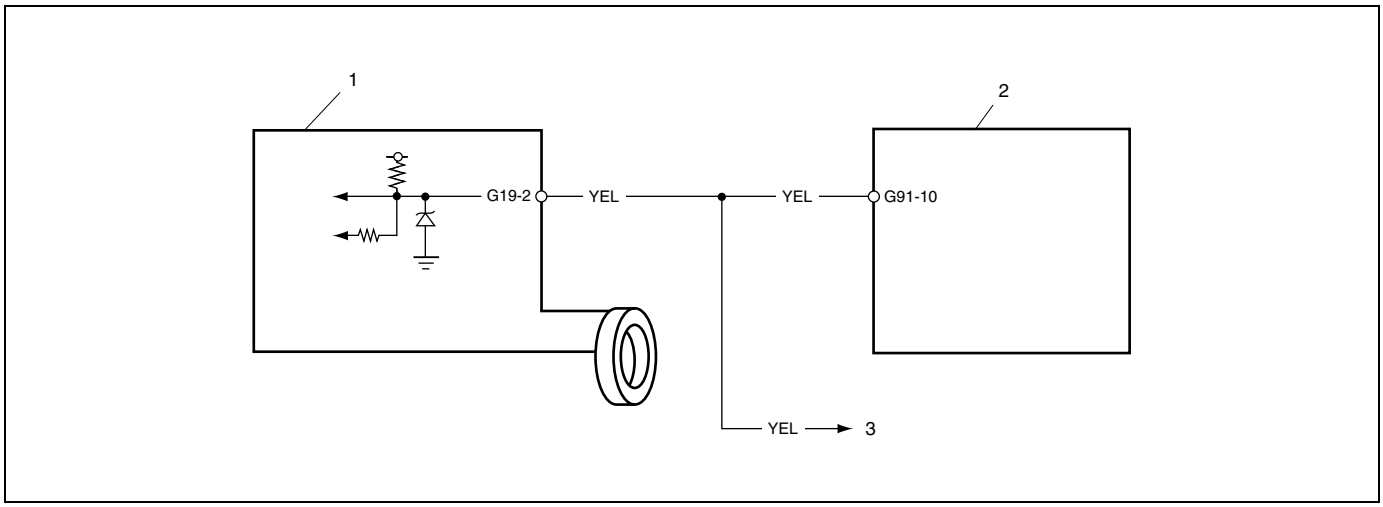

1. Immobilizer Control Module	2. ECM	3. To #9-pin in DLC

DTC Detecting Condition

When the ignition switch is ON, Immobilizer Control Module requests ECM and ECM requests Immobilizer Control Module to transmit ECM/Immobilizer Control Module code. If ECM/Immobilizer Control Module code is not transmitted from ECM or Immobilizer Control Module, Immobilizer Control Module sets DTC23 and ECM sets DTC P1621.

Troubleshooting

Step	Action	Yes	No
1	Check voltage between Immobilizer Control Module (1) coupler terminal G19-2 and body ground with ignition switch turned ON. Is it 4 – 5V?	Go to Step 2.	"YEL" wire short
2	1) Disconnect ECM coupler with ignition switch turned OFF. 2) Is there continuity between Immobilizer Control Module coupler (1) terminal G19-2 and serial data link terminal (G91-10) of ECM coupler? (For positions of Data link connector terminal of ECM coupler, refer to "Immobilizer Control System Wiring Circuit Diagram" in this section.)	Poor G19-2 terminal connection (Immobilizer Control Module) or Poor Data link connector terminal connection (ECM). If connections are OK, substitute a known-good ECM or Immobilizer Control Module and recheck. See NOTE below.	"YEL" wire between Immobilizer Control Module and ECM open

NOTE:

- **After replacing with a known-good ECM, register ECM/Immobilizer Control Module code in ECM by performing procedure described in "Procedure After ECM Replacement" in this section.**
- **After replacing with a known-good Immobilizer Control Module, register ECM/Immobilizer Control Module code in ECM and Transponder code and ECM/Immobilizer Control Module code in Immobilizer Control Module by performing procedure described in "Procedure After Immobilizer Control Module Replacement" in the section.**

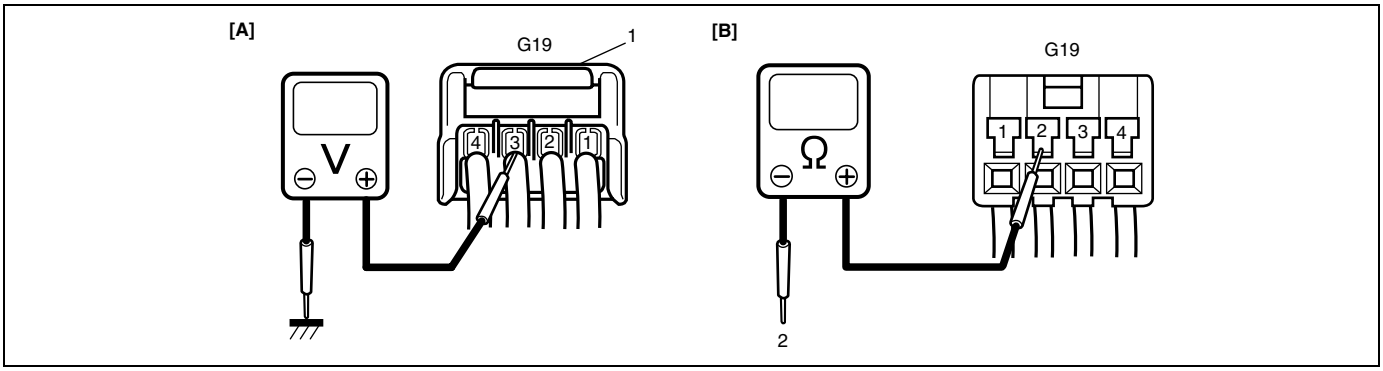

[A]: Fig. 1 for Step 1
[B]: Fig. 2 for Step 2
2. Connect to serial data link terminal (G91-10) of ECM coupler disconnected

Inspection of ECM, Immobilizer Control Module and Its Circuit

ECM, Immobilizer Control Module and its circuit can be checked at ECM wiring couplers and Immobilizer Control Module wiring coupler by measuring voltage. Described here is only inspection of Immobilizer Control Module. For inspection of ECM, refer to "ENGINE AND EMISSION CONTROL INPUT/OUTPUT TABLE" in Section 6E1.

CAUTION:

Immobilizer Control Module cannot be checked by itself. It is strictly prohibited to connect voltmeter or ohmmeter to Immobilizer Control Module with coupler disconnected from it.

Voltage Check

1) Remove Immobilizer Control Module from steering lock assembly with ignition switch OFF, referring to "Removal" of "Immobilizer Control Module Removal and Installation" in this section.
2) Connect Immobilizer Control Module coupler to Immobilizer Control Module.
3) Check voltage at each terminal of coupler connected.

NOTE:

As each terminal voltage is affected by the battery voltage, confirm that it is 11V or more when ignition switch is ON.

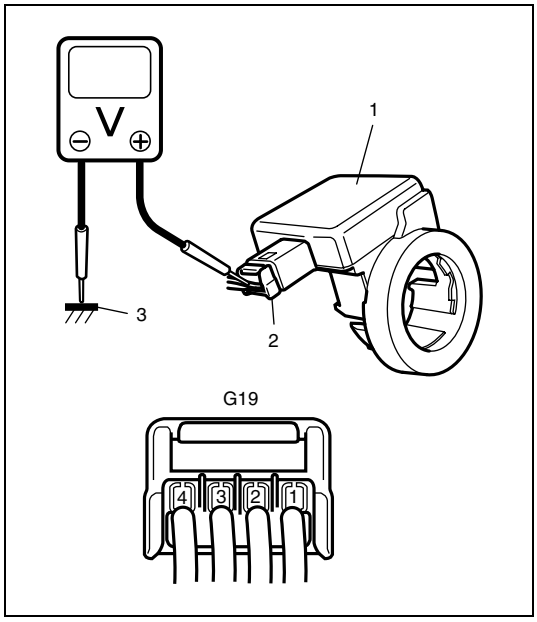

1.	Immobilizer Control Module
2.	Immobilizer Control Module coupler
3.	Body ground

TERMINAL	CIRCUIT	NOMAL VOLTAGE	CONDITION
G19-1	Ground	–	–
G19-2	Data link connector (Serial data terminal)	4 – 5 V	Ignition switch ON
G19-3	Ignition signal	10 – 14 V	Ignition switch ON
		0 – 1 V	Ignition switch OFF
G19-4	Power source	10 – 14 V	Ignition switch ON

On-Vehicle Service

Precautions in Handling Immobilizer Control System

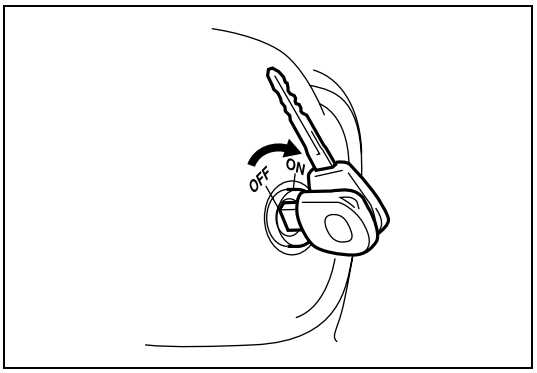

- Don't turn ON ignition switch with ignition key for immobilizer control system put together with another one or placed quite close to another one. Or the system may detect abnormal condition and prevent engine from starting.

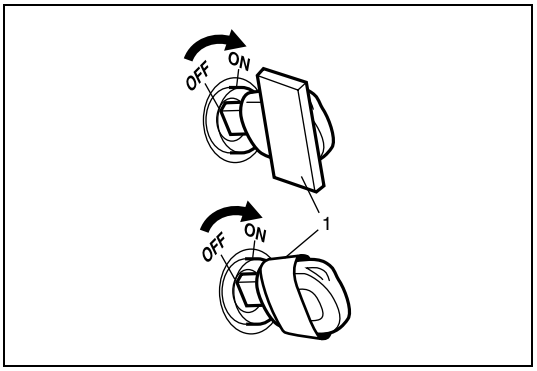

- Do not turn ON ignition switch by using ignition key with any type of metal wound (1) around its grip or in contact with it. Or the system may detect abnormal condition and prevent engine from starting.

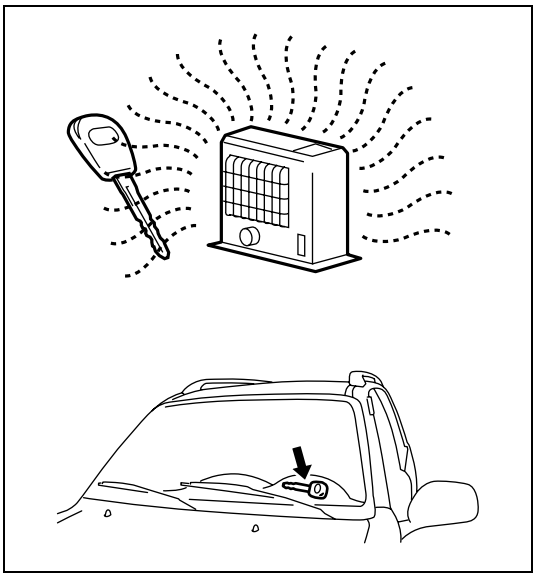

- Do not leave ignition key where high temperature is anticipated. High temperature will cause transponder in ignition key to be abnormal or damaged.

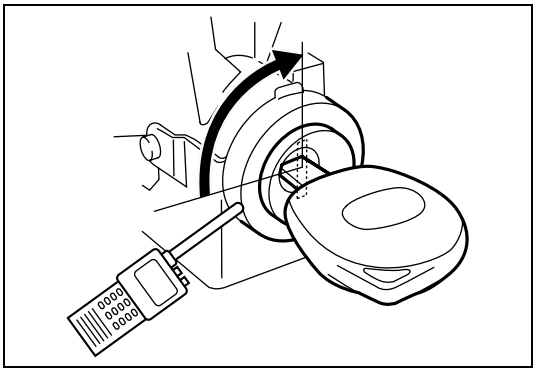

- Do not turn ON ignition switch with a radio antenna placed near Immobilizer Control Module. Or the system may detect abnormal condition and prevent engine from starting.

Immobilizer Control Module Removal and Installation

Removal

1) Disconnect negative (–) cable at battery.
2) Remove driver air bag (inflator) module from steering wheel referring to “Driver Air Bag (Inflator) Module Removal and Installation”.
3) Remove steering wheel referring to “Steering Wheel Removal and Installation”.
4) Remove steering column upper cover, steering column lower cover, contact coil and combination switch assembly referring to “Contact Coil Cable Assembly Removal and Installation”.
5) Remove key cylinder referring to “Steering Column Removal and Installation”.

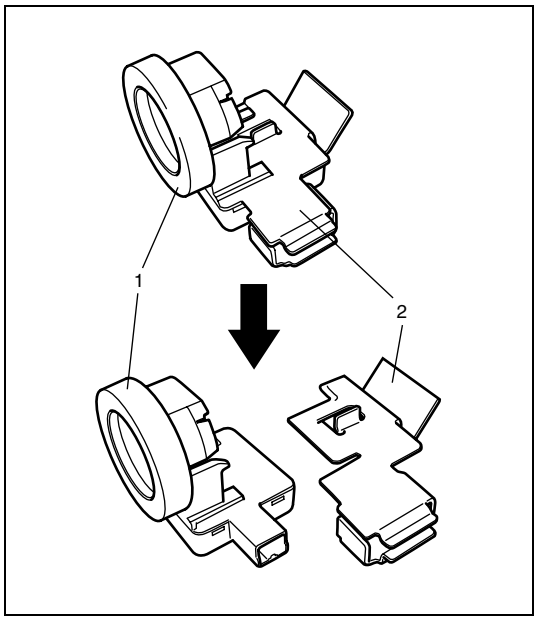

6) Remove immobilizer control module (1) from steering column.
7) If immobilizer control module is equipped with metal cover (2), remove metal cover. If not, go to the next step.
8) Disconnect connector from immobilizer control module.

Installation

Reverse removal procedure for installation.

NOTE:

After replacing Immobilizer Control Module, be sure to register Transponder code and ECM/Immobilizer Control Module code in Immobilizer Control Module and ECM/ Immobilizer Control Module code in ECM by performing procedure described in “Procedure After Immobilizer Control Module Replacement” in this section.

How to Register Ignition Key

Register the ignition key with a built-in transponder in Immobilizer Control Module by using the following procedure.

CAUTION:

When registering the ignition key including a transponder into the immobilizer control module by using Suzuki Scan Tool, confirm that the knob color of the ignition key to be registered for the vehicle is dark gray. The ignition key with wrong knob color cannot be registered.

1) Prepare Suzuki Scan Tool for immobilizer control system.
2) With ignition switch OFF, connect Suzuki Scan Tool to data link connector (DLC) (1) located on underside of instrument panel at driver's seat side.

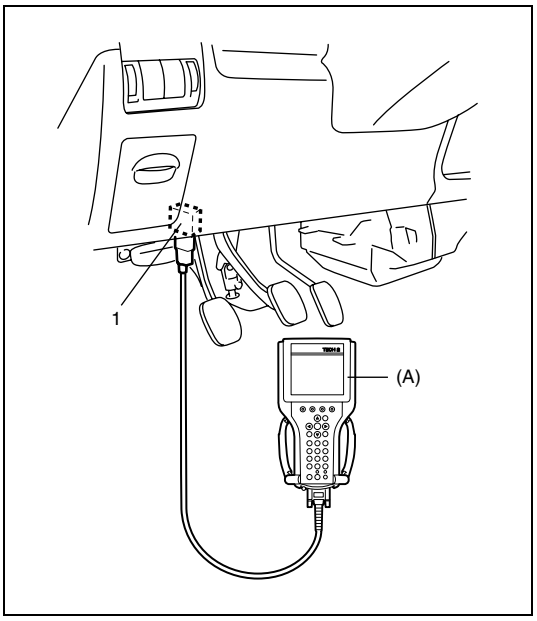

(A): Suzuki Scan Tool

NOTE:

For operation procedure of Suzuki Scan Tool, refer to operator's manual for Suzuki Scan Tool.

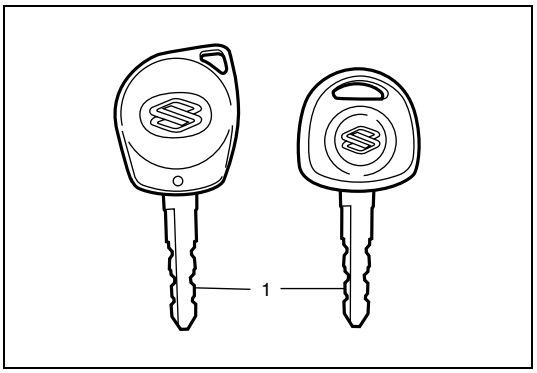

3) Prepare ignition key with a built-in transponder (1). And then turn ignition switch ON by using it.
4) Number of Transponder codes for ignition key with a built-in transponder that can be registered in Immobilizer Control Module is limited to 4. If needed, clear all Transponder codes for ignition key with a built-in transponder that have been registered in Immobilizer Control Module by using Suzuki Scan Tool.

NOTE:

When clearing Transponder code(s) with the immobilizer indicator lamp ON, it remains ON even after execution of that command is over. It will start flashing when the ignition switch is turned OFF once and then turned ON after some seconds.

5) Using Suzuki Scan Tool, register Transponder code in Immobilizer Control Module.
6) Make sure that immobilizer indicator lamp lights when ignition switch is turned OFF once and then ON.
7) If any other Transponder code for ignition key with a built-in transponder needs to be registered, repeat above steps 3), 5) and 6).

NOTE:

- **Up to 4 Transponder codes for ignition key with a built-in transponder can be registered.**
- **It is not possible to register the Transponder code which is already registered in Immobilizer Control Module.**

Procedure After Immobilizer Control Module Replacement

When Immobilizer Control Module was replaced, including when replaced because rechecking by using a known-good Immobilizer Control Module was necessary during trouble diagnosis, register Transponder code and ECM/Immobilizer Control Module code in Immobilizer Control Module and ECM/Immobilizer Control Module code in ECM by performing following procedure.

CAUTION:

When registering the ignition key including a transponder into the immobilizer control module by using Suzuki Scan Tool, confirm that the knob color of the ignition key to be registered for the vehicle is dark gray. The ignition key with wrong knob color cannot be registered.

1) Perform steps 1) and 2) described in “How to Register Ignition Key”.
2) Prepare ignition key with a built-in transponder. And then turn ignition switch ON by using it.
3) Using Suzuki Scan Tool, clear all transponder codes registered in Immobilizer Control Module.

NOTE:

When clearing Transponder code(s) with the immobilizer indicator lamp ON, it remains ON even after execution of that command is over. It will start flashing when the ignition switch is turned OFF once and then turned ON after some seconds.

4) Using Suzuki Scan Tool, register Transponder code in Immobilizer Control Module.
5) Using Suzuki Scan Tool, register ECM/Immobilizer Control Module code in both Immobilizer Control Module and ECM.
6) Make sure that immobilizer indicator lamp lights when ignition switch is turned OFF once and then ON.
7) If any other Transponder code needs to be registered, repeat above steps 2), 4) and 6).

NOTE:

- **Up to 4 Transponder codes for ignition key with a built-in transponder can be registered.**
- **It is not possible to register the Transponder code which is already registered in Immobilizer Control Module.**

Procedure After ECM Replacement

When ECM was replaced, including when replaced because rechecking by using a known-good ECM was necessary during trouble diagnosis, register ECM/Immobilizer Control Module code in ECM by performing following procedure.

1) Perform steps 1) and 2) described in “How to Register Ignition Key”. And then turn ignition switch ON.
2) Using Suzuki Scan Tool, register ECM/Immobilizer Control Module code in ECM.

NOTE:

For operation procedure of Suzuki Scan Tool, refer to operator’s manual for Suzuki Scan Tool.

3) Make sure that malfunction indicator lamp lights when ignition switch is turned OFF once and then ON.

Special Tool

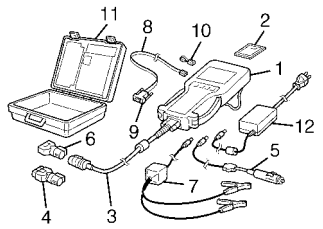

Tech 2 kit (Suzuki Scan Tool) See NOTE below.

NOTE:

This kit includes the following items.
1. Tech 2, 2. PCMCIA card, 3. DLC cable, 4. SAE16/19 adapter, 5. Cigarette cable,
6. DLC loopback adapter, 7. Battery power cable, 8. RS232 cable, 9. RS232 adapter,
10. RS232 loopback connector, 11. Storage case, 12. Power supply

SECTION 9

BODY SERVICE

WARNING:

For vehicles equipped with Supplemental Restraint (Air Bag) System:

- **Service on and around the air bag system components or wiring must be performed only by an authorized SUZUKI dealer. Refer to "Section System Components and Wiring Location View" under "Section General Description" in Section 10B in order to confirm whether you are performing service on or near the air bag system components or wiring. Please observe all WARNINGS and "Section Service Precautions" under "Section On-Vehicle Service" in Section 10B before performing service on or around the air bag system components or wiring. Failure to follow WARNINGS could result in unintentional activation of the system or could render the system inoperative. Either of these two conditions may result in severe injury.**
- **Technical service work must be started at least 90 seconds after the ignition switch is turned to the "LOCK" position and the negative cable is disconnected from the battery. Otherwise, the system may be activated by reserve energy in the Sensing and Diagnostic Module (SDM).**
- **When body servicing, if shock may be applied to air bag system component parts, remove those parts beforehand. (Refer to Section 10B.)**

NOTE:

Fasteners are important attaching parts in that they could affect the performance of vital components and systems, and/or could result in major repair expense. They must be replaced with one of the same part number of with an equivalent part if replacement becomes necessary.
Do not use a replacement part of lesser quality or substitute a design. Torque values must be used as specified during reassembly to assure proper retention of these parts.

CONTENTS

Glass, Windows and Mirrors 9-3
- Front Door Window Removal and Installation 9-3
- Front Door Window Inspection 9-7
- Front Door Window Regulator Removal and Installation 9-7
- Front Door Window Regulator Inspection 9-8
- Door Mirror Removal and Installation 9-8
- Rear Door Window Removal and Installation 9-9
- Rear Door Window Inspection 9-12
- Rear Door Window Regulator Removal and Installation 9-13
- Rear Door Window Regulator Inspection 9-13
- Windshield Removal and Installation 9-14
  - Preparation 9-14
- Quarter Window Removal and Installation 9-20
- Rearend Glass Removal and Installation 9-21

Body Structure 9-22
- Front Door Removal and Installation 9-22
- Rear Door Removal and Installation 9-25
- Rearend Door Removal and Installation 9-26
- Hood Removal and Installation 9-28
- Hood Adjustment 9-28
- Hood Inspection 9-29
- Front Fender Removal and Installation 9-29
- Front Bumper and Rear Bumper Removal and Installation 9-30
- Bumper Extension and Splash Guard Removal and Installation (If Equipped) 9-31
- Rearend Door Spoiler Removal and Installation (If Equipped) 9-32
- Roof Rail Removal and Installation (If Equipped) 9-33
- Body Dimensions 9-34
  - Engine room 9-34
  - Rearend door 9-35
  - Side body 9-36
  - Under body 9-38
- Panel Clearance 9-40

Instrumentation and Driver Information 9-41

Instrument Panel Removal and Installation....9-41
Seats....9-43
Front Seat Removal and Installation....9-43
Rear Seat Removal and Installation....9-44
Security and Locks....9-45
Front Door Lock Assembly Removal and Installation....9-45
Front Door Lock Assembly Inspection....9-48
Rear Door Lock Assembly Removal and Installation....9-49
Rear Door Lock Assembly Inspection....9-51
Rearend Door Lock Assembly Removal and Installation....9-52
Key Coding....9-53
Key Usage and Identification....9-53
Ignition switch lock cylinder removal and installation....9-54
Exterior and Interior Trim....9-54
Floor Carpet Removal and Installation....9-54
Center Console Box Removal and Installation....9-55
Head Lining Removal and Installation....9-56
Roof Molding Removal and Installation....9-59
Paint and Coatings....9-60
Anti-Corrosion Treatment....9-60
Sealant Application Areas....9-61
Under Coating Application Areas....9-67
Anti-Corrosion Compound Application Area....9-69
Plastic Parts Finishing....9-70
Required Service Material....9-70

Glass, Windows and Mirrors

Front Door Window Removal and Installation

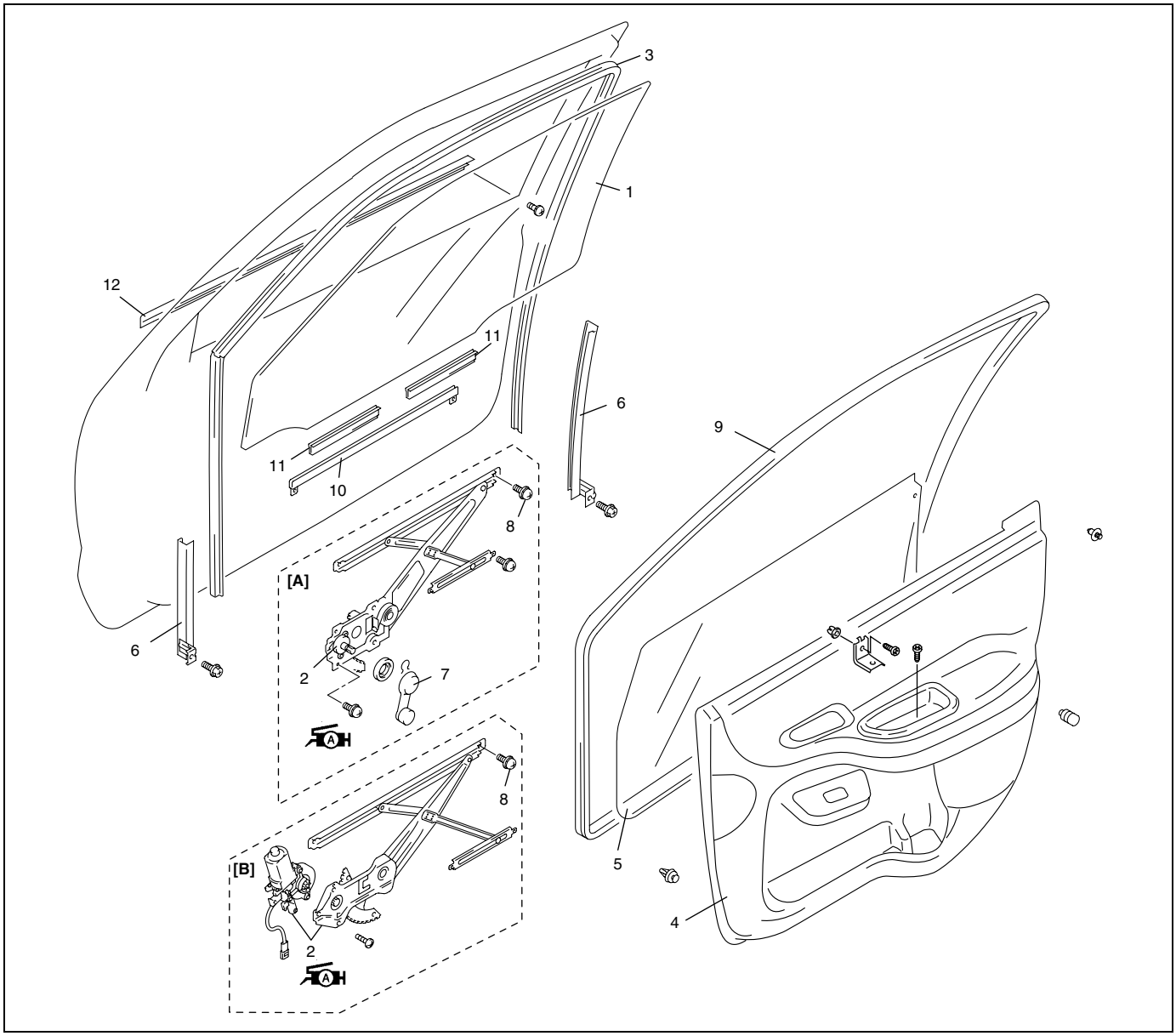

	1. Door glass	6. Door sash	11. Glass bottom rubber
A H	2. Window regulator assembly : Apply lithium grease 99000-25010 to sliding part.	7. Window regulator handle	12. Front door outer weather-strip
	3. Glass run	8. Bottom channel attaching screw	[A] Without power window
	4. Door trim	9. Door opening weather-strip	[B] With power window
	5. Door sealing cover	10. Glass bottom channel	

REMOVAL

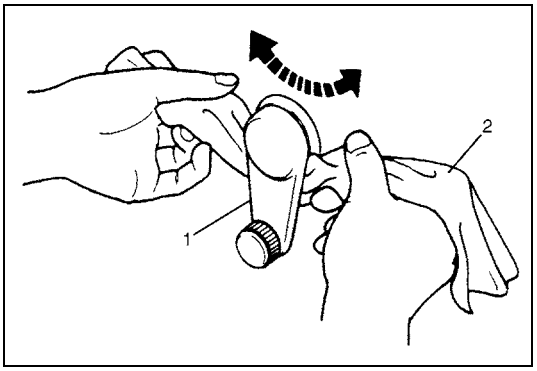

1) Remove window regulator handle (1) (if equipped).
   For its removal, push up snap off by using a cloth (2) as shown in figure.

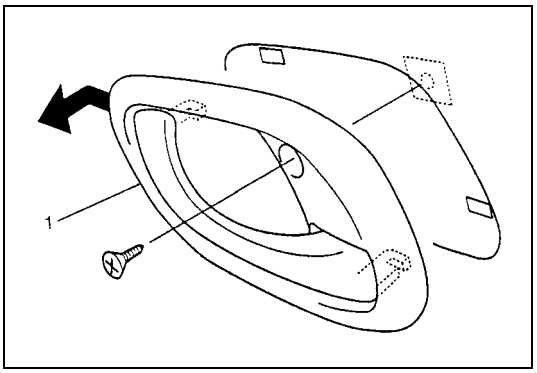

2) Remove inside handle bezel (1).

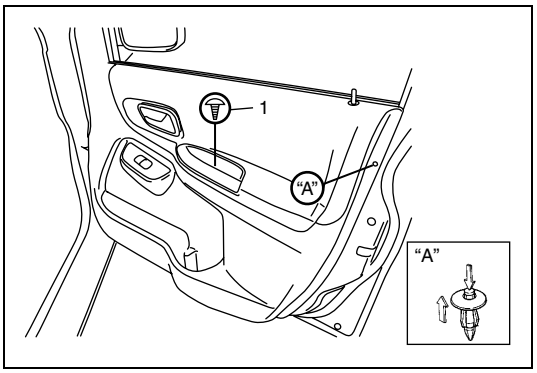

3) Remove mirror inner garnish.
4) Loosen door trim mounting screw (1).

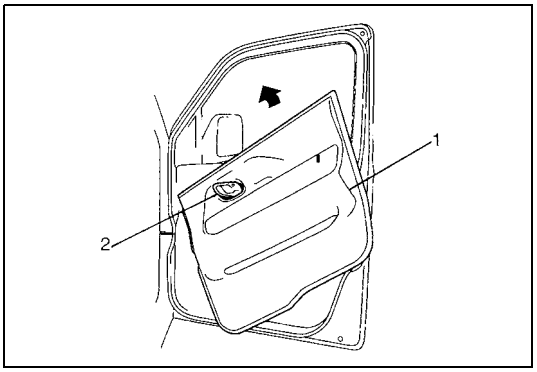

5) Remove door trim (1).
   With inside handle bezel (2) tilted as shown in figure.
6) Disconnect power window switch and mirror switch lead wire at coupler (if equipped).

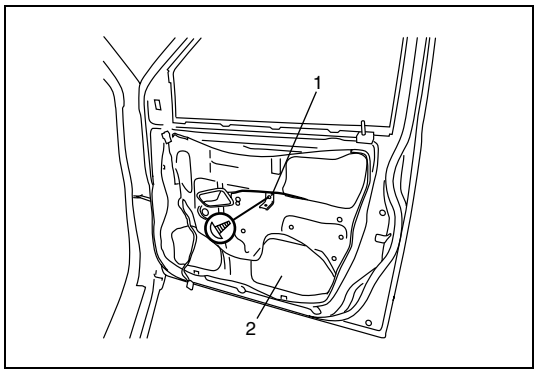

7) Remove door trim bracket (1).
8) Remove door sealing cover (2).
9) Remove door mirror.
   Refer to “Door Mirror Removal and Installation” in this section.

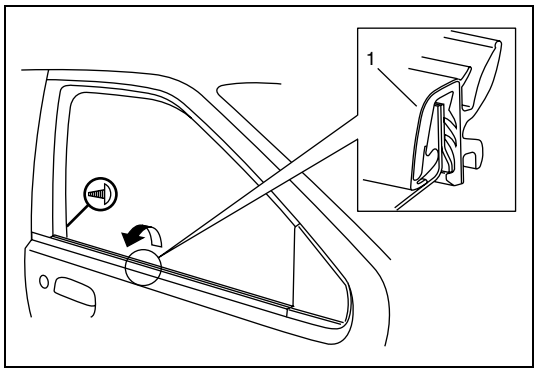

10) Remove outer weather-strip (1). Do not deform it when removal.
    Lower window all the way down. Then, pry off outer weather-strip using a tape-wrapped putty knife.

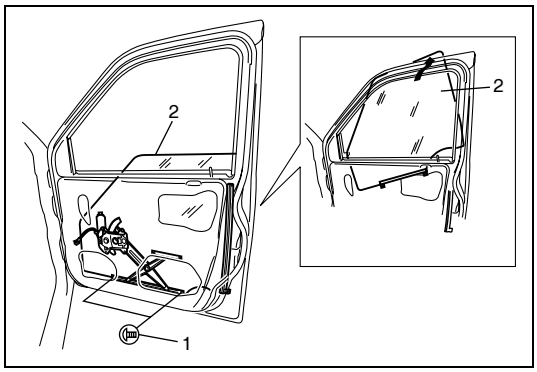

11) Remove bottom channel attaching screws (1).
12) Remove door glass (2) while tilting it as shown in figure.

INSTALLATION

Reverse removal procedure to install door glass noting the following instructions.

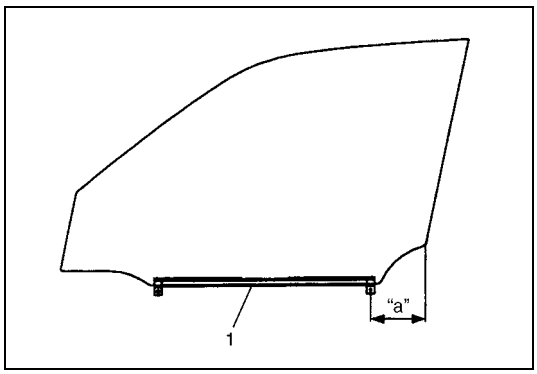

- Fit bottom channel (1) on glass bottom end as shown in figure.

Glass fitted position of bottom channel
“a”: 90.8 – 93.8 mm (3.57 – 3.69 in.)

- Tighten bottom channel attaching screws. Tighten rear screw first, and then tighten front screw.

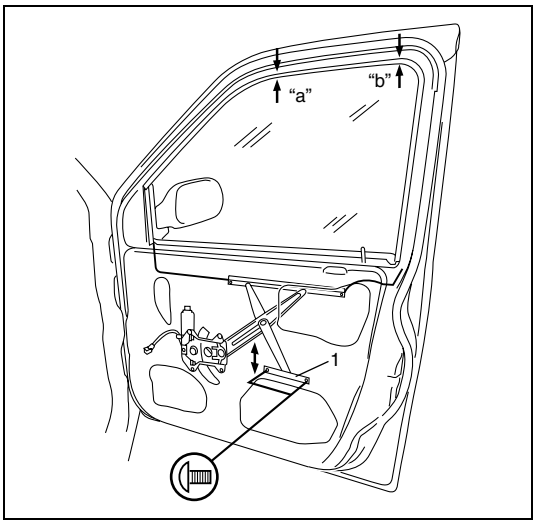

- Adjust equalizer (1) of window regular so that measurement "a" and "b" are equal.

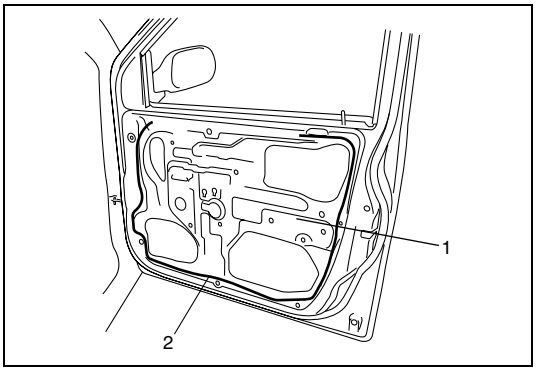

- Secure door sealing cover (1) with adhesive (2).

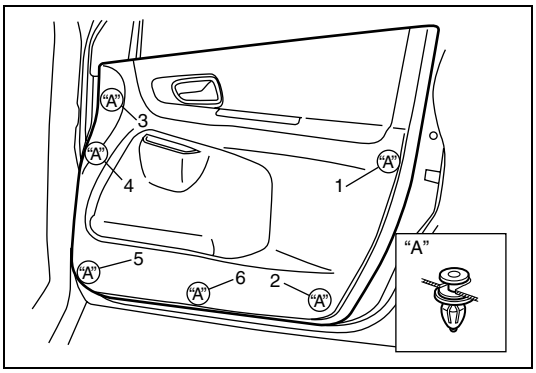

Install front door trim to proper attaching order.

Front door trim attaching order
(1) → (2) → (3) → (4) → (5) → (6)

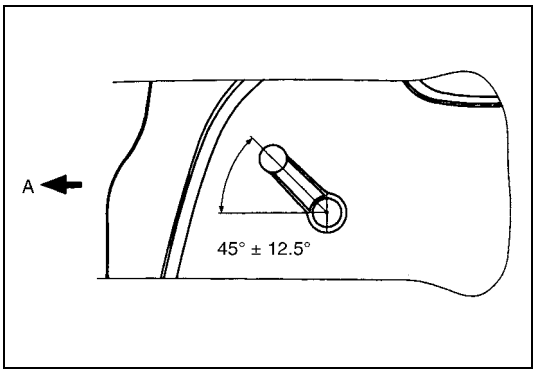

- Install door window regulator handle (1) so that it has a 45° ± 12.5° angle when glass is fully closed as shown in figure.

A : Front

Front Door Window Inspection

Check deformity for glass run. If found defective, replace it with a new one.

Front Door Window Regulator Removal and Installation

REMOVAL

1) Remove door glass referring to “Front Door Window Removal and Installation” in this section.
2) Disconnect power window motor lead wire at coupler and loosen clamp, if equipped.
3) Loosen regulator mounting screws (1) and take out regulator through hole (2) as shown in figure.

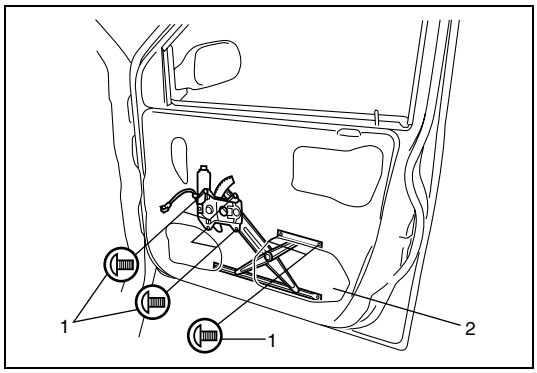

INSTALLATION

Reverse removal procedure to install window regulator noting the following instruction.

- Apply grease to sliding and rotating portions of regulator.

Grease 99000-25010

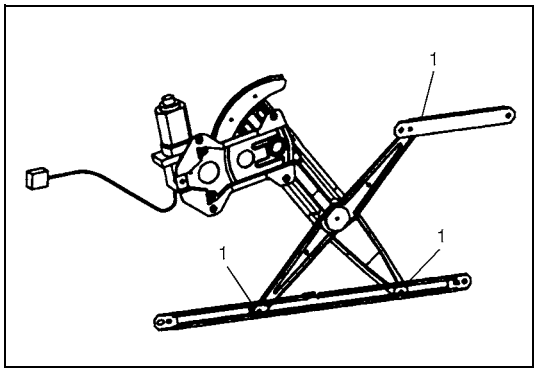

- When installing glass, check that the top part of the glass contacts the glass run evenly and that the glass moves up and down smoothly.
  If the glass is tilted with respect to the glass run, adjust equalizer (1) of window regulator so that measurement “a” and “b” are equal.

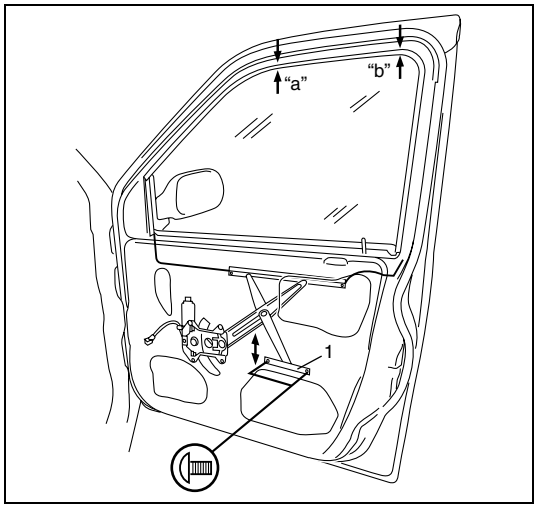

Front Door Window Regulator Inspection

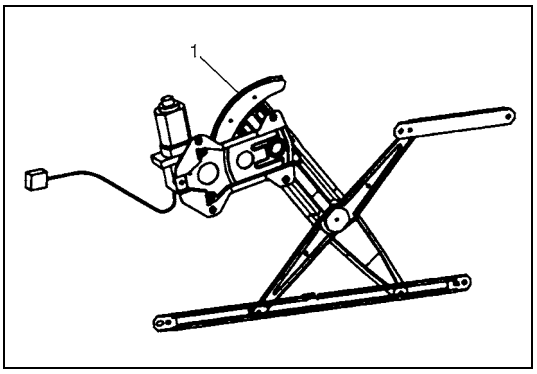

Check rollers (1) for wear and damage. If found defective, replace it with a new one.

Door Mirror Removal and Installation

When removing or installing door mirror, refer to the figure.

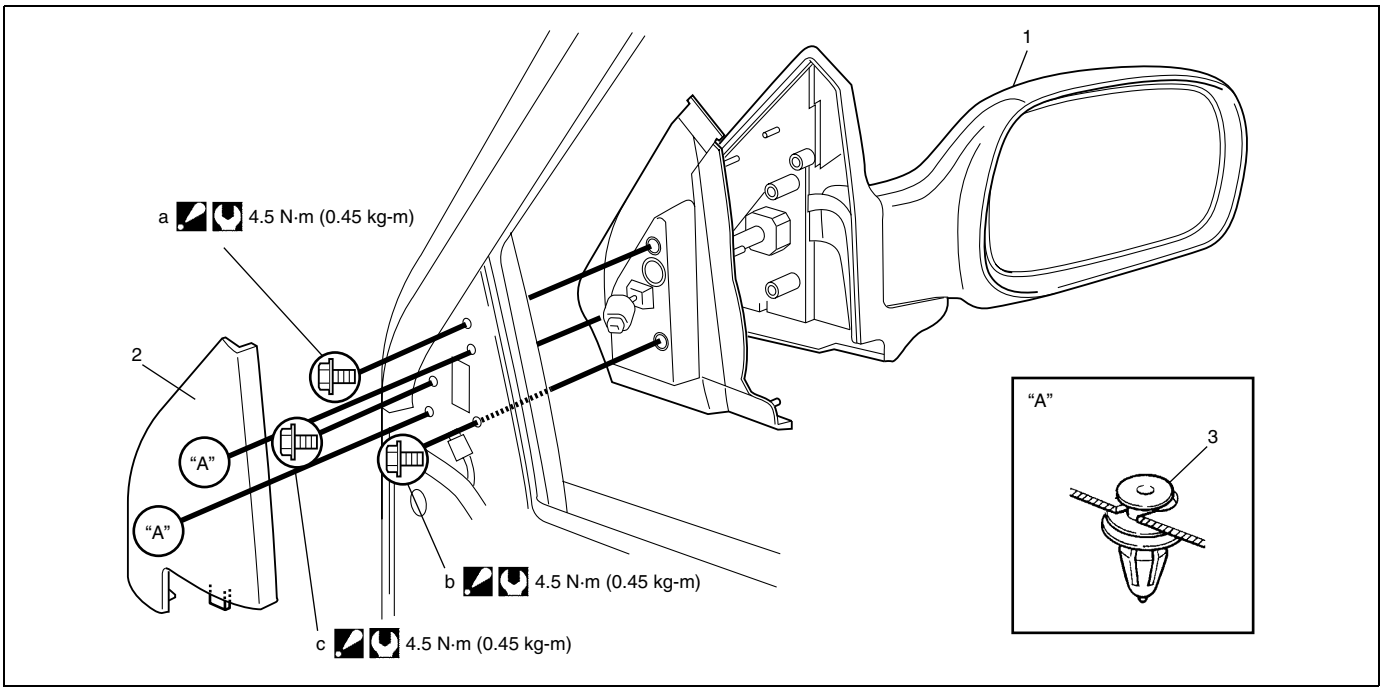

1. Door mirror	a. Mirror mount screw	Tightening order : a → b → c
2. Inner garnish	b. Mirror mount screw	Tightening torque
3. Clip	c. Mirror mount screw	

Rear Door Window Removal and Installation

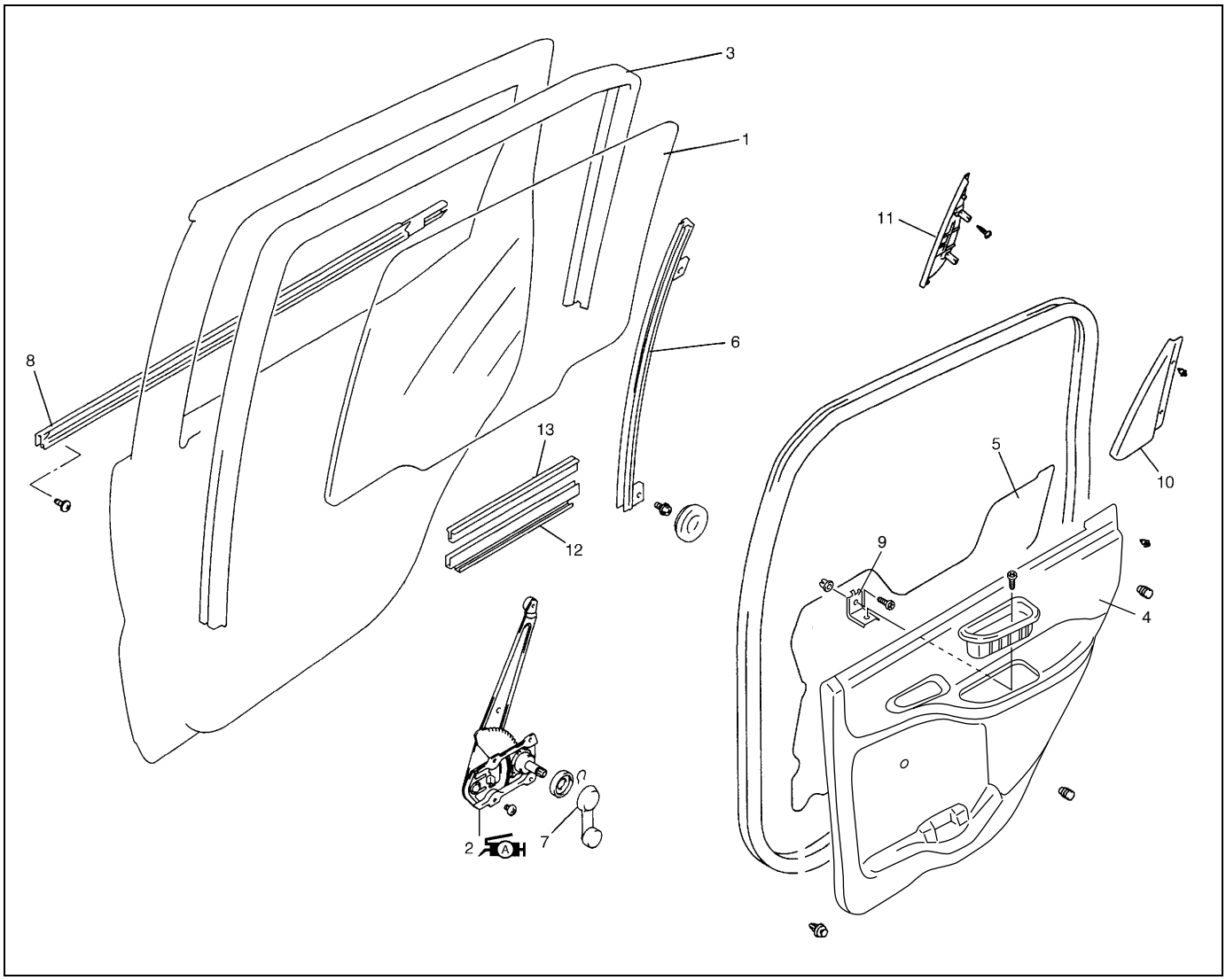

	1. Door glass	6. Door sash	11. Rear door outer garnish
A H	2. Window regulator assembly : Apply lithium grease 99000-25010 to moving section.	7. Window regulator handle	12. Glass bottom channel
	3. Glass run	8. Rear door outer weather-strip	13. Glass bottom rubber
	4. Door trim	9. Rear door inside pull handle bracket	
	5. Door sealing cover	10. Rear door inner garnish	

REMOVAL

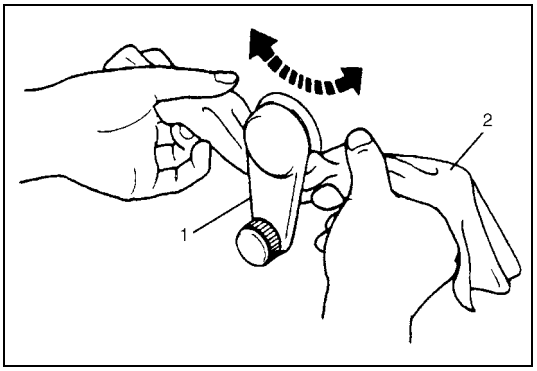

1) Remove window regulator handle (1).
   For its removal, push up snap off by using a cloth (2) as shown in figure.

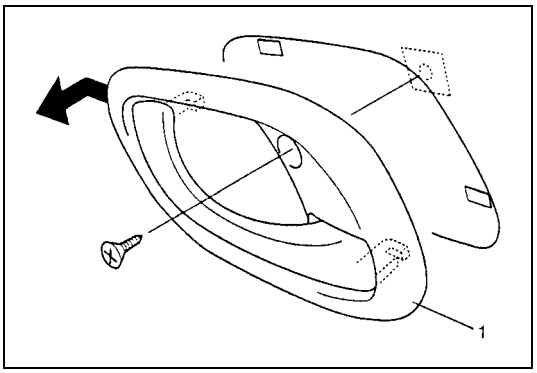

2) Remove inside handle bezel (1).

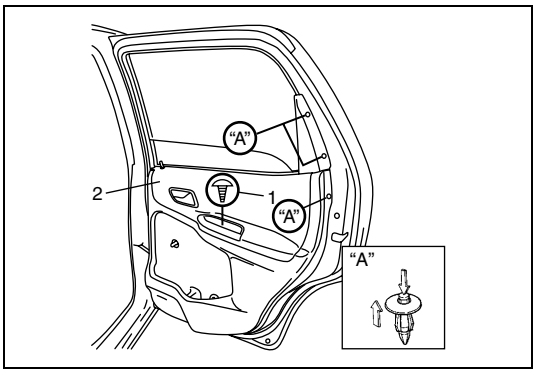

3) Loosen door trim mounting screw (1).
4) Remove rear door inner garnish (2).

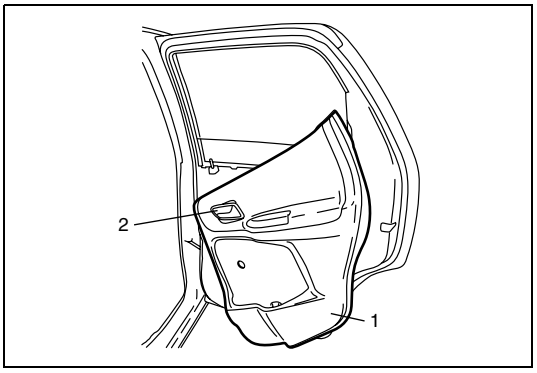

5) Remove door trim (1).
   With inside handle bezel (2) tilted as shown in figure.

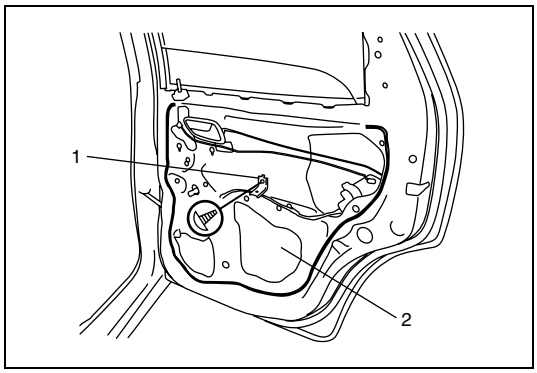

6) Remove door trim bracket (1).
7) Remove door sealing cover (2).

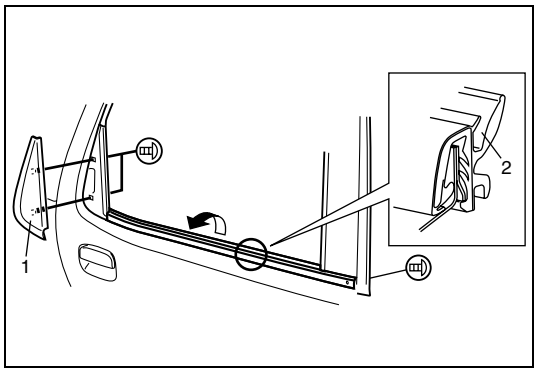

8) Remove rear door outer garnish (1).
9) Remove outer weather-strip (2). Do not deform it when removal.
   Lower window all the way down. Then, use a tape-wrapped putty knife (or screwdriver) to pry off outer weather-strip.

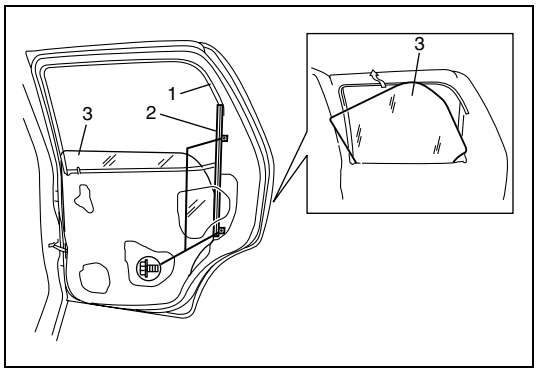

10) Detach rear part of glass run (1) from door sash (2).
11) Remove door sash (2).
12) Remove door glass (3) as shown in figure.

INSTALLATION

Reverse removal procedure to install door glass noting the following instructions.

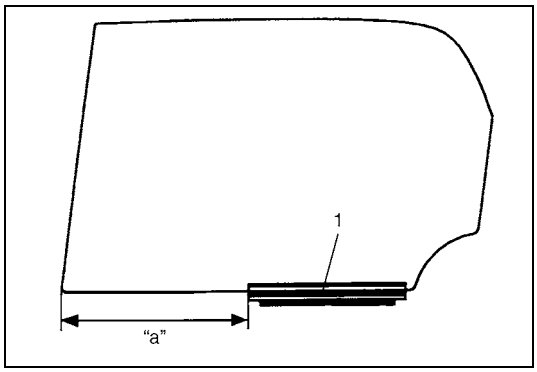

- Fit bottom channel (1) on glass bottom end as shown in figure.

  Glass fitted position of bottom channel
  "a": 201.9 – 204.9 mm (7.95 – 8.07 in.)

- Tighten bottom channel attaching screws. Tighten rear screw first, and then tighten front screw.

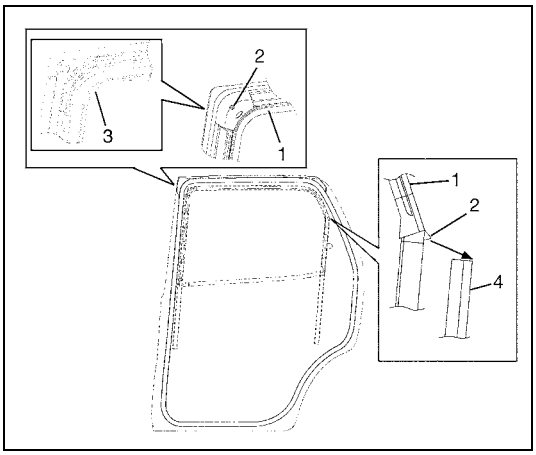

- When glass run (1) is installed, fit glass run convex part (2) to door panel cut part (3) and door sash (4).

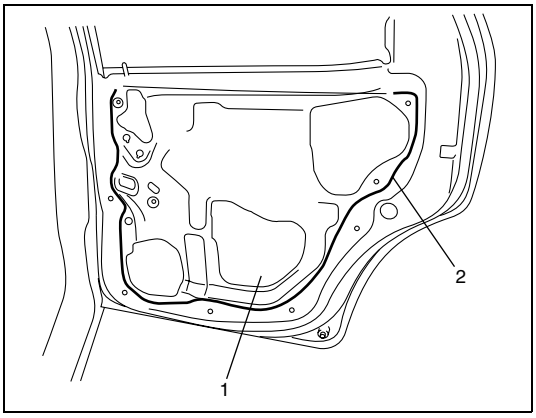

- Secure door sealing cover (1) with adhesive (2).

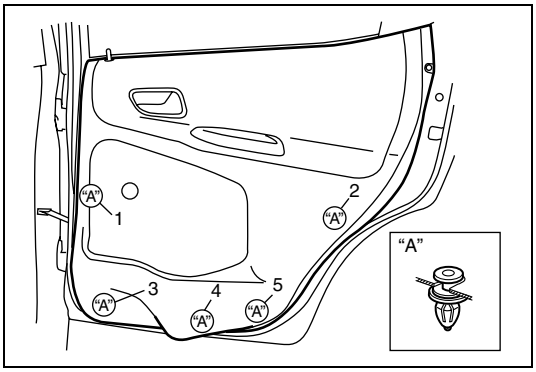

- Install rear door trim to proper attaching order.

Rear door trim attaching order
(1) → (2) → (3) → (4) → (5)

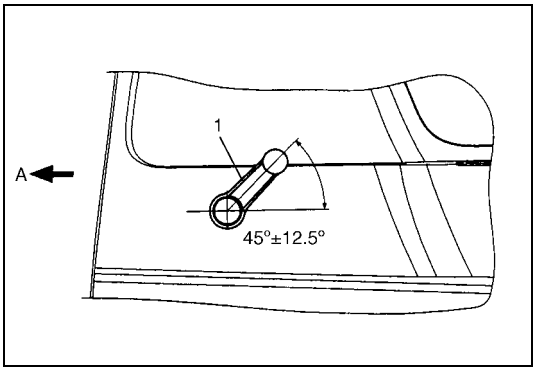

- Install door window regulator handle (1) so that it has a 45° ± 12.5° angle when glass is fully closed.

A : Front

Rear Door Window Inspection

Check deformity for glass run. If found defective, replace it with a new one.

Rear Door Window Regulator Removal and Installation

REMOVAL

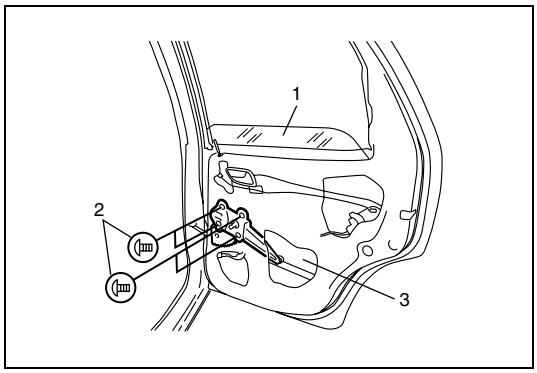

1) Remove door glass (1) referring to “Rear Door Window Removal and Installation” in this section.
2) Loosen regulator mounting screws (2) and take out regulator through hole (3) as shown.

INSTALLATION

Reverse removal procedure to install window regulator noting the following instruction.

- Apply grease to sliding and rotating portions or regulator.

Grease 99000-25010

Rear Door Window Regulator Inspection

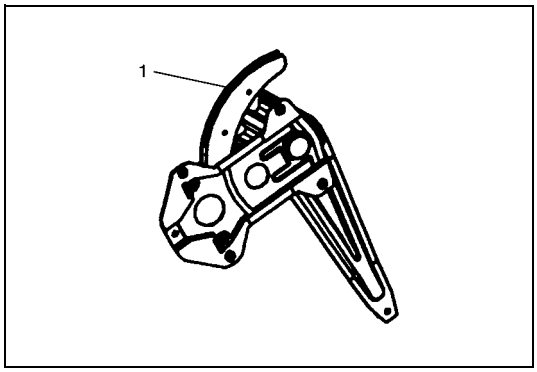

Check rollers (1) for wear and damage. If found defective, replace it with a new one.

Windshield Removal and Installation

Preparation

The front windshield is installed by using a special type of adhesive (that is, one component urethane adhesive used with primer). For the Windshield replacement, it is important to use an adhesive which provides sufficient adhesion strength and follow the proper procedure.

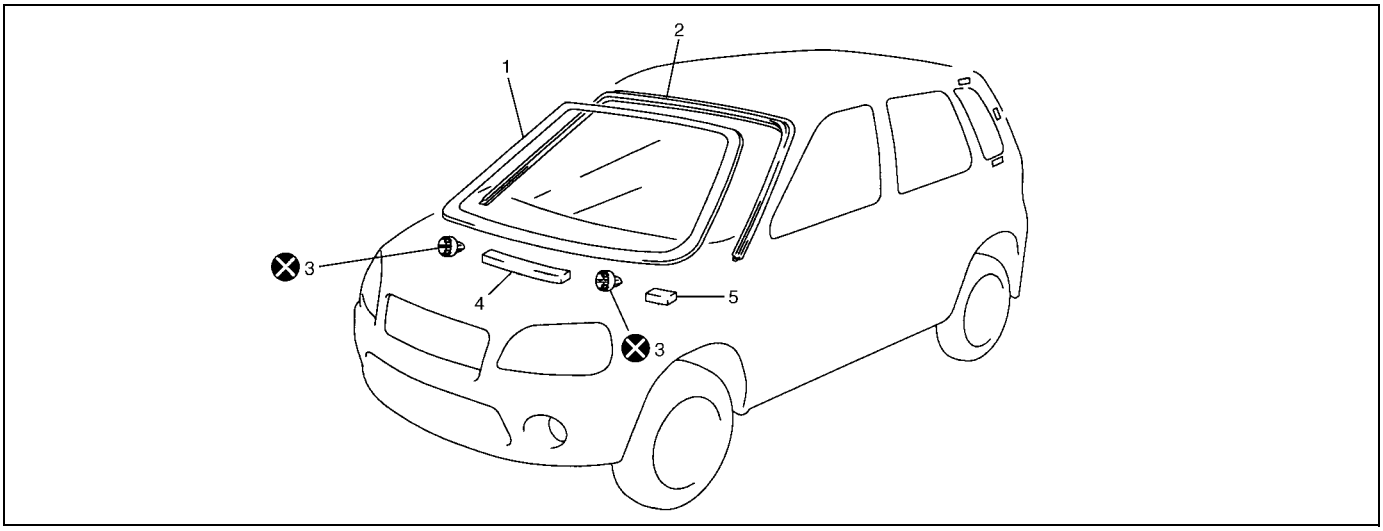

1. Windshield glass	3. Stopper	5. Side spacer
2. Windshield molding	4. Center spacer	⊗ Do not reuse.

CAUTION:

- **Described in this section is the glass replacement by using 3 types of primers and 1 type of adhesive made by YOKOHAMA (one component urethane adhesive to be used with primer in combination). When using primer and adhesive made by other manufacturers, be sure to refer to handling instructions supplied with them. Negligence in following such procedure or misuse of the adhesive in any way hinders its inherent adhesive property. Therefore, before the work, make sure to read carefully the instruction and description given by the maker of the adhesive to be used and be sure to follow the procedure and observe each precaution throughout the work.**
- **Should coated surface be scratched or otherwise damaged, be sure to repair damaged part, or corrosion may start from there.**

Use an adhesive of above mentioned type which has the following property.

Glass adhesive shearing strength

: 40 kg/cm^2 (569 lb/in^2) or more

Adhesive materials and tools required for removal and installation.

- One component urethane adhesive and primers used in combination (For one sheet of windshield)
  - Adhesive (470 g (15.7 oz.))
  - Primer for glass (30 g (1.0 oz.))
  - Primer for body (30 g (1.0 oz.))
  - Primer for molding (30 g (1.0 oz.))
- Eyeleteer
- Piano string
- Windshield knife
- Brush for primer application (2 pcs)
- Knife
- Rubber sucker grip

- Sealant gun (for filling adhesive)
- Putty spatula (for correcting adhered parts)

REMOVAL

1) Clean both inside and outside of glass and around it.
2) Remove wiper arms and garnish.
3) Using tape, cover body surface around glass to prevent any damage.
4) Remove rear view mirror, sun visor, and front pillar trims (right & left).
5) If necessary, remove instrument panel. Refer to “Instrument Panel Removal and Installation” in this section.
6) If necessary, remove head lining. Refer to “Head Lining Removal and Installation” in this section.
7) Remove (or cut) windshield molding.

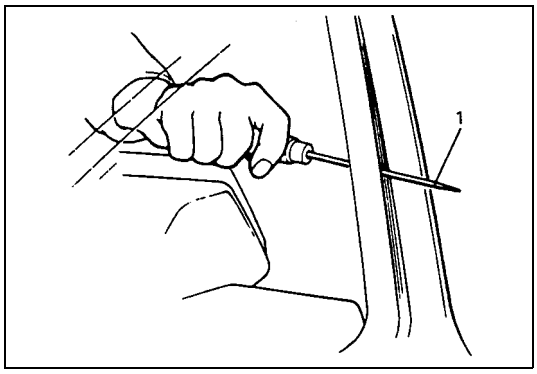

8) Drill hole with eyeleteer (1) through adhesive and let piano string through it.

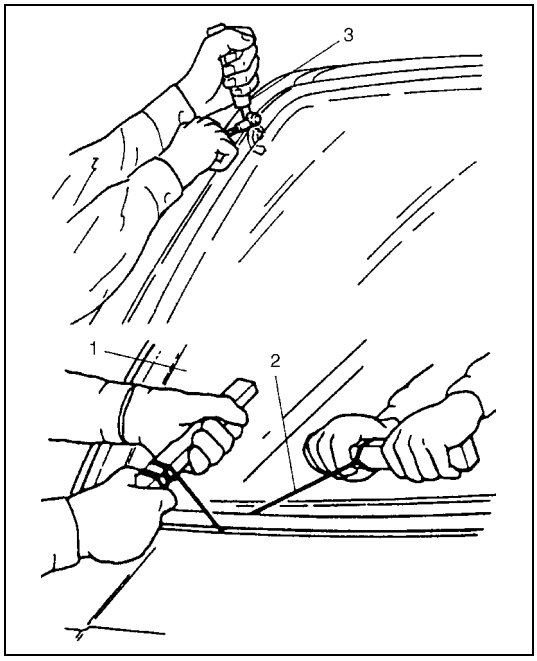

9) Cut adhesive all around windshield (1) with piano string (2). When using tool, windshield knife (3), to cut adhesive, be careful not to cause damage to windshield. Use wire to cut adhesive along lower part of windshield.

NOTE:

Use piano string (2) as close to glass as possible so as to prevent damage to body and instrument panel.

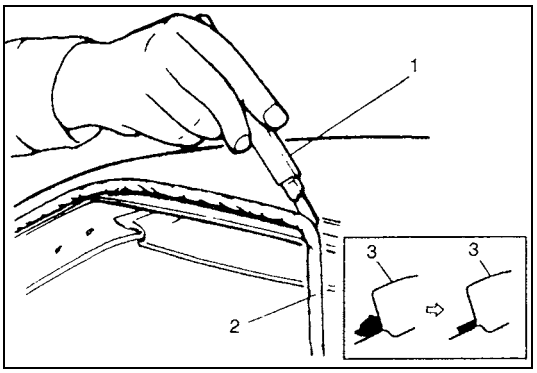

10) Using knife (1), smoothen adhesive (2) remaining on body side (3) so that it is 1 – 2 mm (0.039 – 0.078 in.) thick all around.

NOTE:

Before using knife (1), clean it with alcohol or the like to remove oil from it.

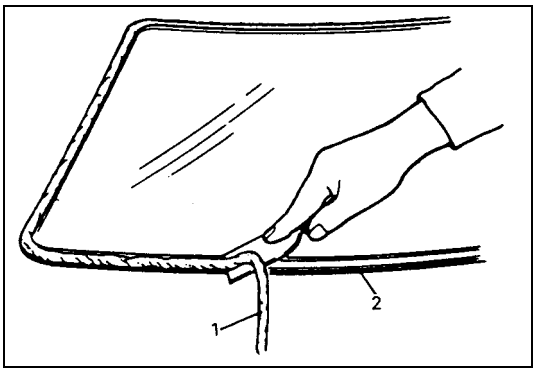

11) When reusing windshield, remove the adhesive (1) from it, using care not to damage primer coated surface (2).

INSTALLATION

1) Using cleaning solvent, clean windshield edge where windshield glass is to be adhered. (Let it dry for 10 minutes or more.)

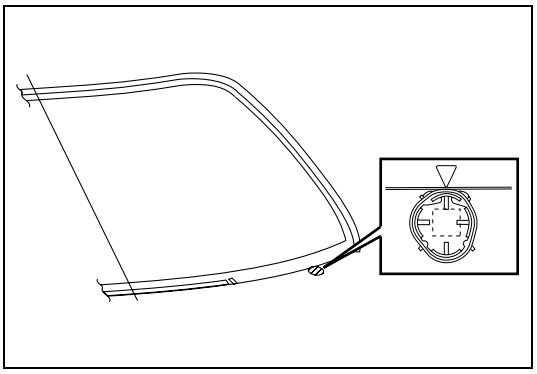

2) Install new glass stoppers (1) (2 pieces) to lower side of windshield.

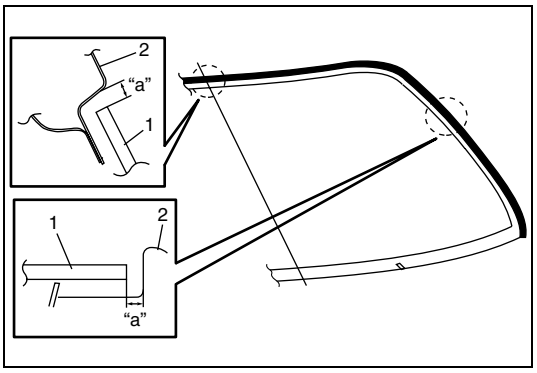

3) To determine installing position of glass (1) to body (2), position glass against body so that clearance between upper end of glass (1) and body (2) is approximately 5 mm (0.197 in.) and clearances between each side end (right & left) of glass (1) and body (2) are even. Then mark mating marks on glass (1) and body (2) as shown. Upper clearance can be adjusted by moving glass stoppers position.

Windshield clearance
"a": approx. 5 mm (0.197 in.)

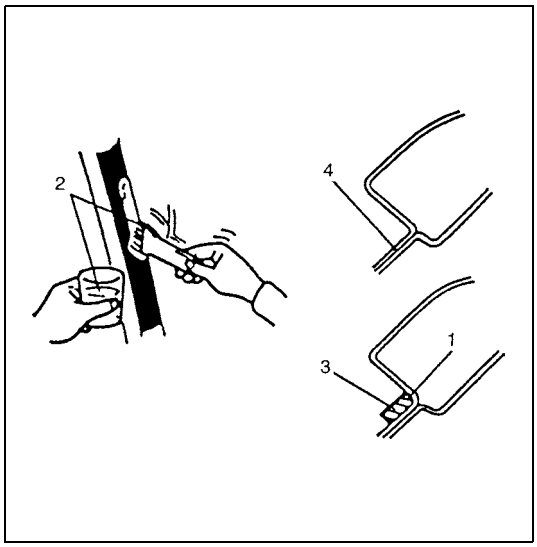

4) Clean contact surfaces of old adhesive (1), paint or bare metal thoroughly.
   If surfaces of paint or bare metal come out, apply primer (2) for body with caution not to apply primer (2) to surface of adhesive remaining on body.

NOTE:

- **Be sure to refer to primer maker's instruction for proper handling and drying time.**
- **Do not touch body and old adhesive surfaces where glass is to be adhered.**

3.	Do not apply primer
4.	Apply primer

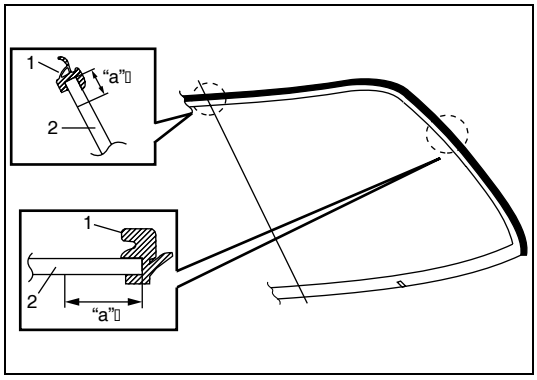

5) Install new molding (1) to glass (2).
6) Clean glass surface to be adhered to body with clean cloth. If cleaning solvent is used, let it dry for 10 minutes or more.

Cleaning Area for windshield (distance from the edge of glass or molding)
"a": 30 – 50 mm (1.18 – 1.97 in.)

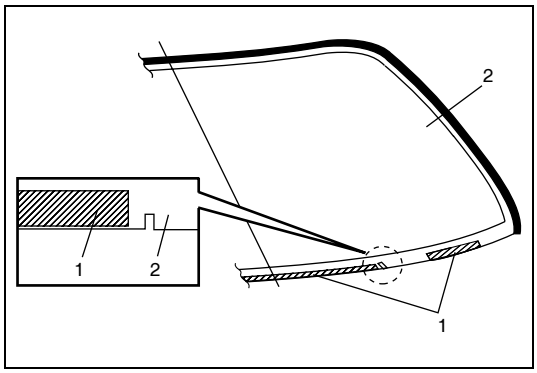

7) Install new spacer (1) to windshield (2).

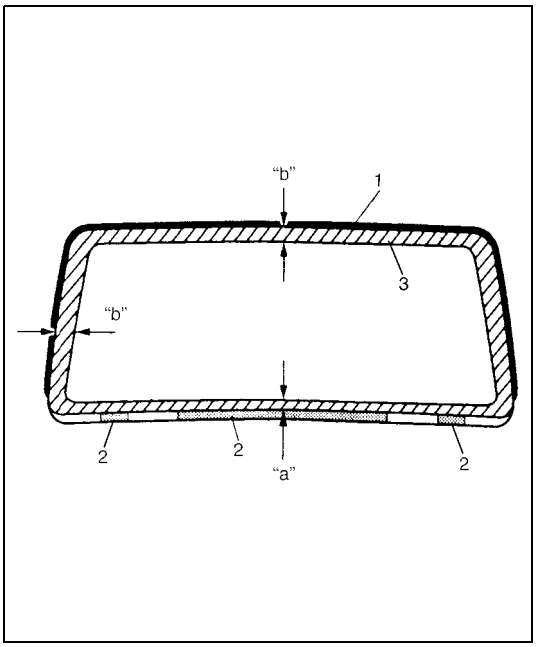

8) Using new brush, apply sufficient amount of primer for glass along glass surface to be adhered to body.

NOTE:

- **Be sure to refer to maker's instruction for proper handling and drying time.**
- **Do not apply primer on outside of ceramic coated surface.**
- **Do not touch primer coated surface.**

Width applied primer for windshield
"a": 22 mm (0.87 in.)
"b": 15 mm (0.59 in.)

1. Molding
2. Spacer
3. Apply primer

9) Apply primer for molding along molding surface all around.

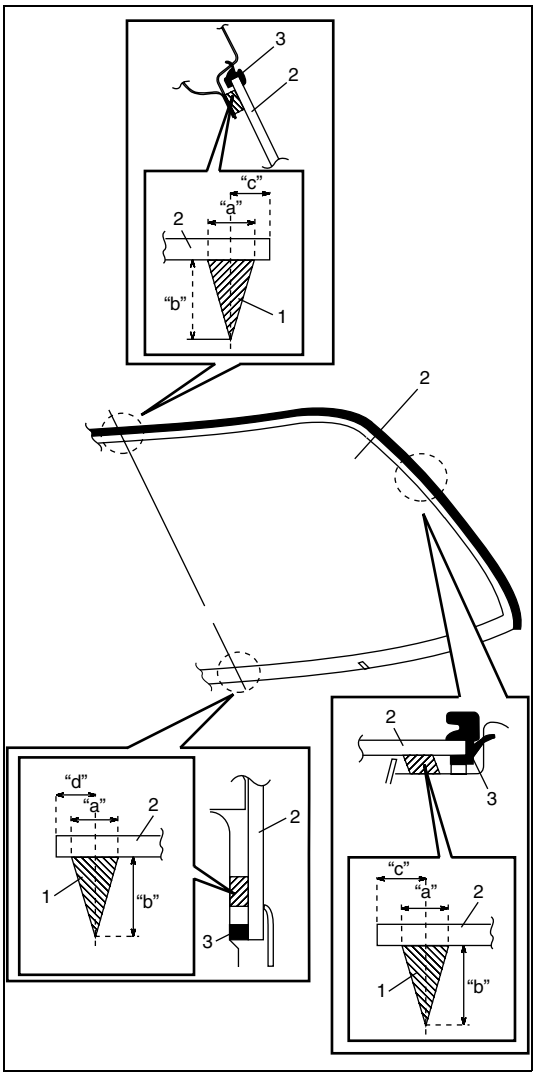

10) Apply adhesive (1) referring to figure.

NOTE:

- **Press glass (2) against fittings surface of body panel quickly after adhesive (1) is applied.**
- **Use of rubber sucker grip is helpful to hold and carry glass after adhesive (1) is applied.**
- **Perform steps 8) to 9) within 10 min. to ensure sufficient adhesion.**
- **Be sure to refer to adhesive maker's instruction for proper handling and drying time.**
- **Start from bottom side of glass (2).**
- **Be careful not to damage primer.**

Adhesive amount specifications and position for windshield
Width "a": Approx. 7 mm (0.27 in.)
Height "b": Approx. 15 mm (0.59 in.)
Position "c": Approx. 10 mm (0.39 in.) for front, rear and upper sections
Position "d": Approx. 17 mm (0.67 in.) for bottom section.

3. Molding

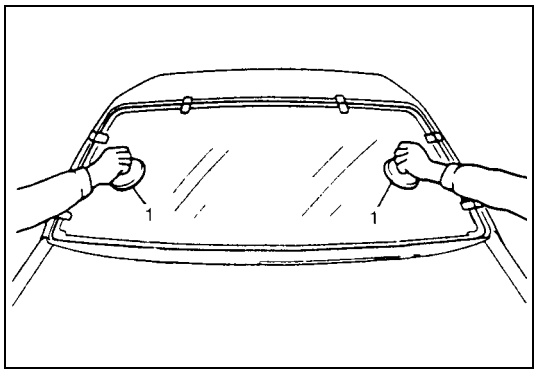

11) Holding rubber sucker grips (1), place glass onto body by aligning mating marks marked in Step 3) and press it.

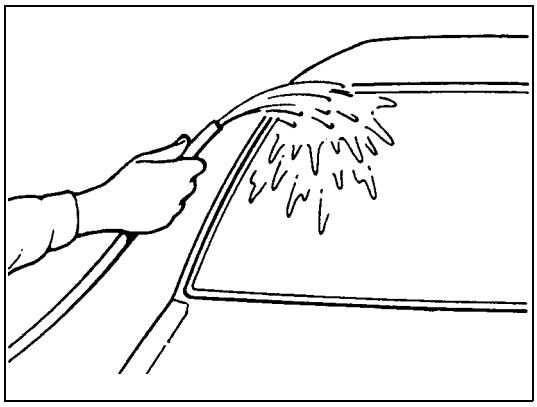

12) Check for water leakage by pouring water over windshield through hose. If leakage is found, dry windshield and fill leaky point with adhesive. If water still leaks even after that, remove glass and start installation procedure all over again.

NOTE:

- **Do not use high pressure water.**
- **Do not blow compressed air directly at adhesive applied part when drying.**
- **Do not use infrared lamp or like for drying.**

CAUTION:

Upon completion of installation, note the following.

- **Sudden closing of door before adhesive is completely set may cause glass to become loose or to come off. Therefore, if door is opened or closed before adhesive is completely set, make sure to open all door glasses and use proper care.**
- **If molding is not securely in place, hold it down with a tape until adhesive is completely set.**
- **Each adhesive has its own setting time.**
- **Be sure to refer to its maker's instruction, check setting time of adhesive to be used and observe precautions to be taken before adhesive is set.**
- **Refrain from driving till adhesive is completely set so as to ensure proper and sufficient adhesion.**

Quarter Window Removal and Installation

REMOVAL AND INSTALLATION

Refer to “Windshield Removal and Installation” in this section as removal and installation procedures are basically the same. However, note the following.

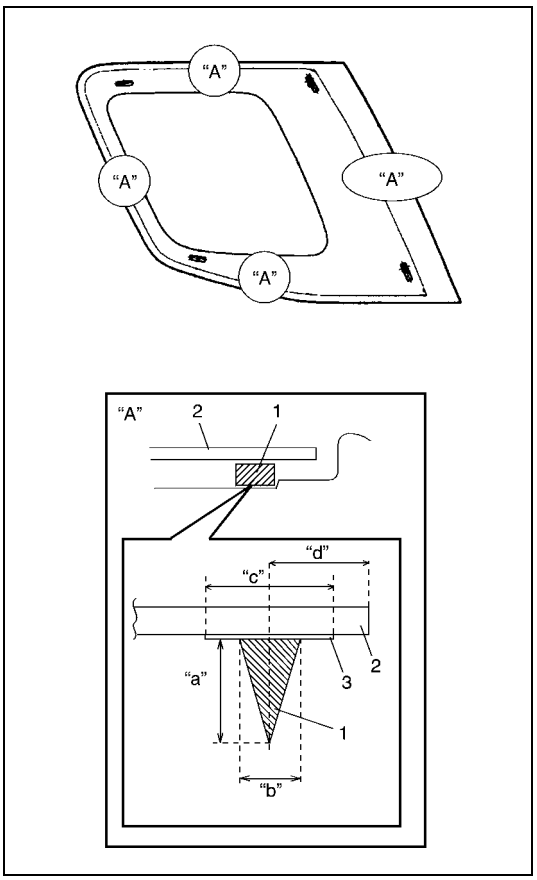

- Observe the following precautions when applying adhesive (1) along glass (2) edge.
- Adhesive (1) should be applied evenly especially in height.
- Be careful not to damage primer (3).
- Press glass against body quickly after adhesive (1) is applied.

Adhesive amount specification and position for quarter window
Height “a”: 13 mm (0.51 in.)
Width “b”: 6 mm (0.24 in.)
Width “c”: 14 mm (0.55 in.)
Position “d”: 12 mm (0.47 in.) for glass front and bottom sections.
Position “d”: 11 mm (0.43 in.) for glass upper section
Position “d”: 45 mm (1.77 in.) for glass rear section

Rearend Glass Removal and Installation

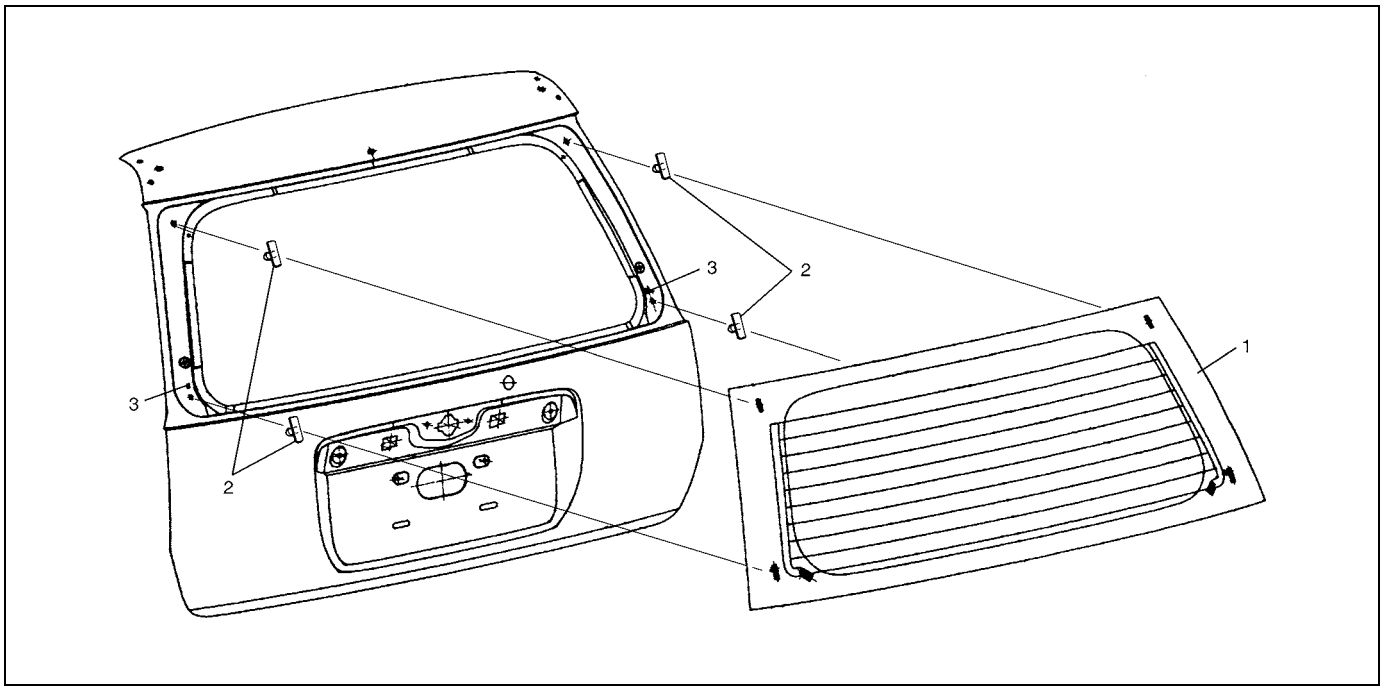

1. Rearend door glass	2. Fastener	3. Mounting hole

Refer to “Windshield Removal and Installation” in this section as removal and installation procedures are basically the same. However, note the following.

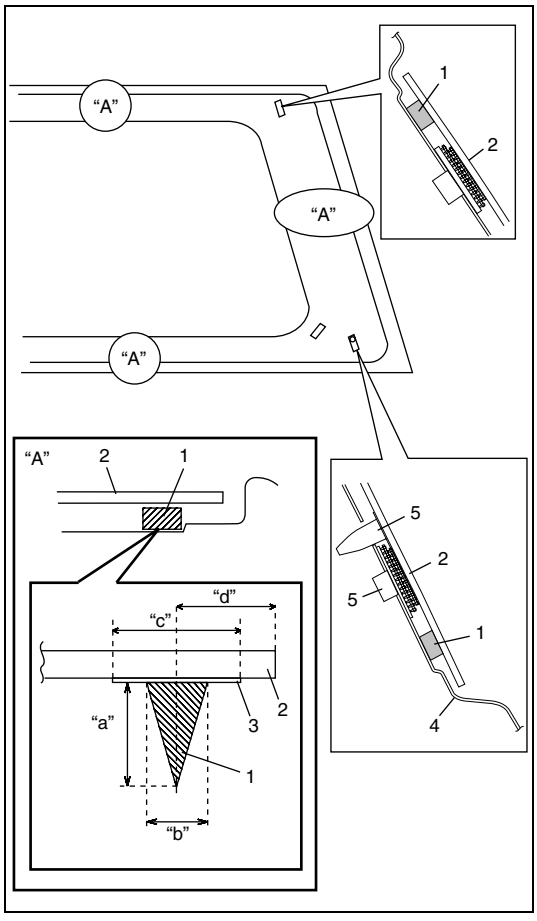

- Observe the following precautions when applying adhesive (1) along glass (2) edge.
- Adhesive (1) should be applied evenly especially in height.
- Be careful not to damage primer (3).
- With the position of fastener (5) properly aligned, install glass (2) on rear door panel (4).
- Press glass against body quickly after adhesive (1) is applied.

Adhesive amount specifications and position for rearend door glass
Height “a”: 13 mm (0.51 in.)
Width “b”: 6 mm (0.24 in.)
Width “c”: 14 mm (0.55 in.)
Position “d”: 14.5 mm (0.57 in.) for glass upper section
Position “d”: 16 mm (0.63 in.) for glass bottom section
Position “d”: 32 mm (1.26 in.) for glass side sections

Body Structure

Front Door Removal and Installation

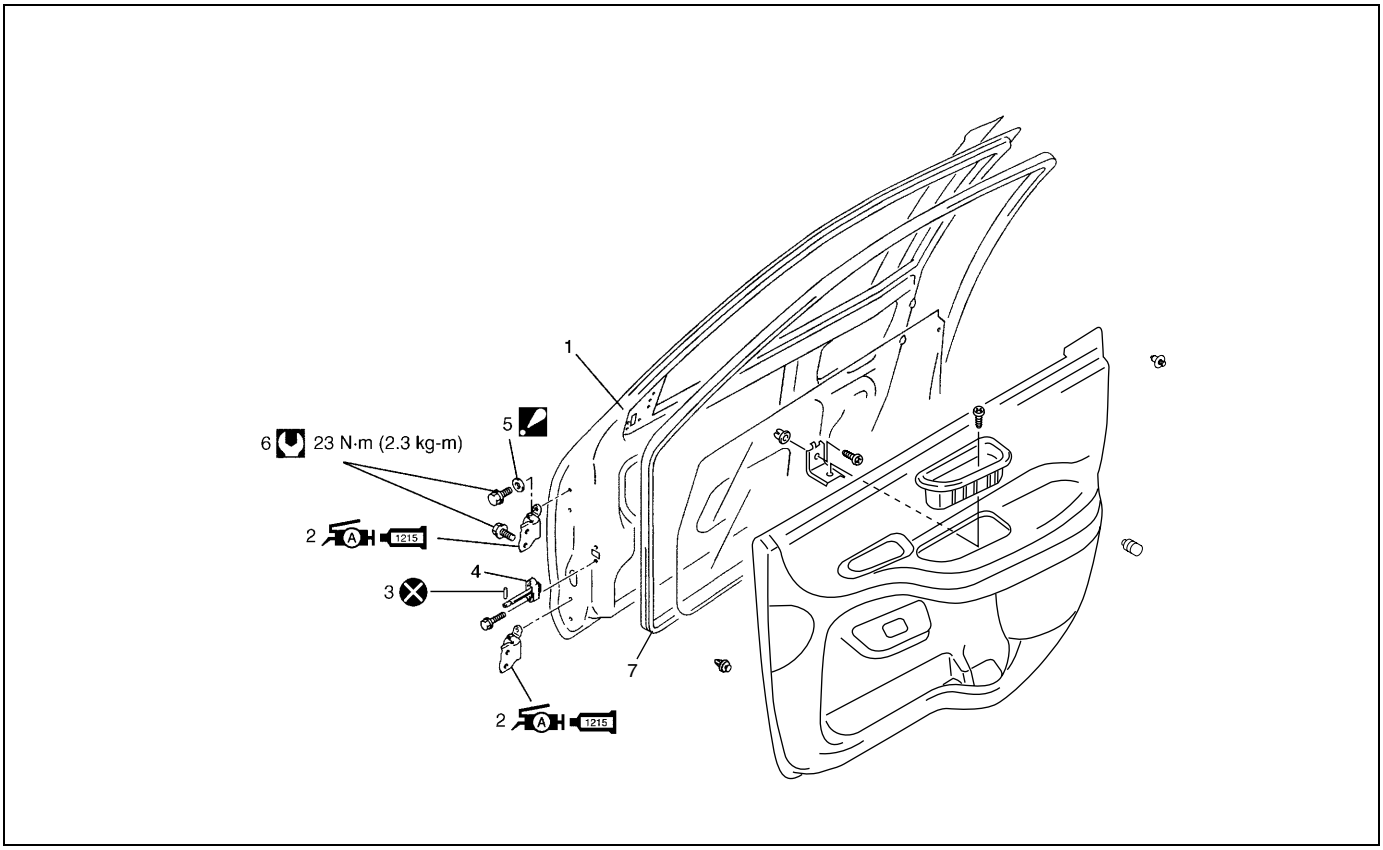

	1. Door panel	6.	Front door hinge bolt
1215	2. Door hinge : Apply lithium grease 99000-25010 to rotating part : Apply sealant 99000-31110 to contact face	7.	Weather-strip
	3. Door stopper pin		Tightening torque
	4. Door open stopper		Do not reuse.
	5. Door hinge washer : Not necessary to install		

REMOVAL

1) Remove front fender. Refer to “Front Fender Removal and Installation” in this section.
2) Disconnect door harness lead wires at each coupler (if equipped).
3) Remove stopper pin (1) from door open stopper (2).

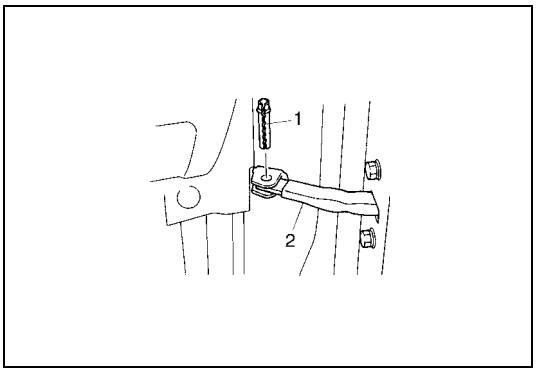

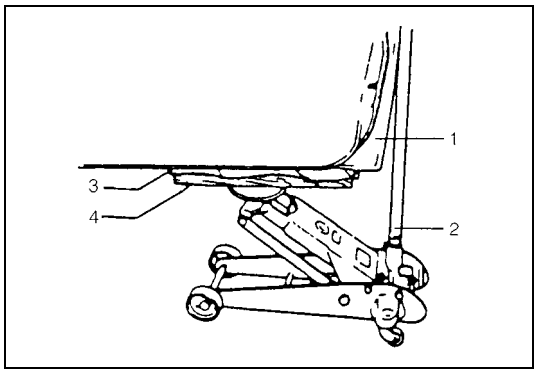

4) Support door panel (1) using a jack (2) with a piece of wood placed (4) between jack (2) and panel (1) as shown.

3. Rags

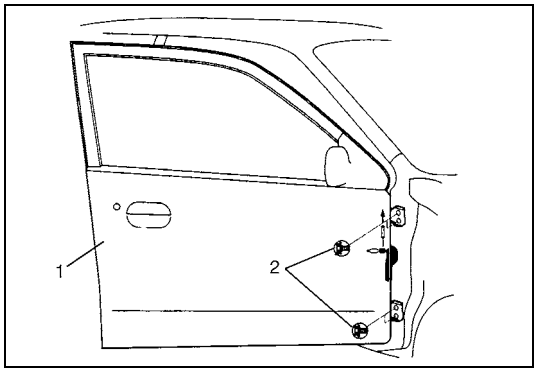

5) Remove door assembly (1) by loosening hinge mounting bolts (2).

INSTALLATION

Reverse removal procedure to install door assembly noting the following instructions.

- When replacing door, coat replacement door inside with wax for proper anti-corrosion treatment.
  Refer to “Anti-Corrosion Compound Application Area” in this section.

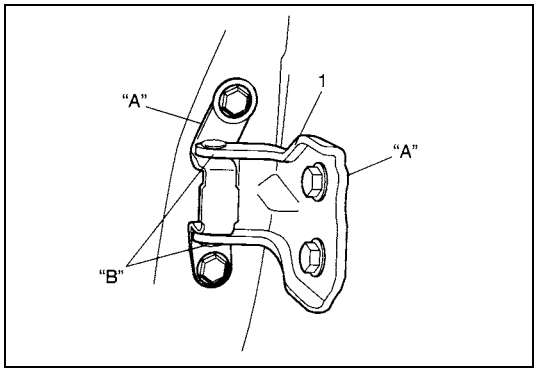

- Apply sealant to contact face “A” of hinge (1).

“A”: Sealant 99000-31110

- Apply grease to rotating part “B” of hinge (1).

“B”: Lithium grease 99000-25010

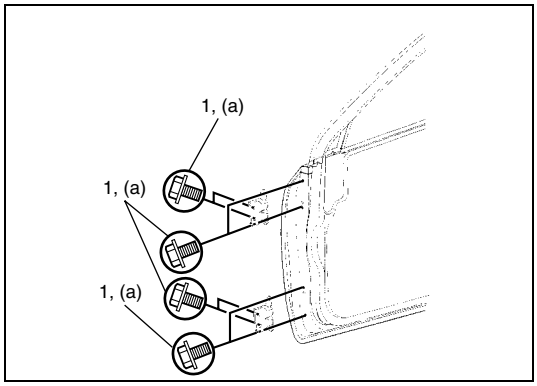

- Tighten hinge bolt (1) to specified torque.

Tightening torque
Door hinge mounting bolt
(a): 23 N·m (2.3 kg-m, 17.0 lb-ft)

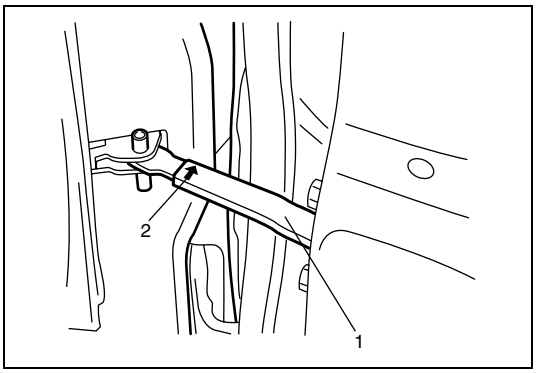

- Install door open stopper (1) as show in figure.

2. Mark

- Adjust door latch striker position referring to “Front Door Lock Assembly Removal and Installation” in this section.
- Adjust front door cushion so that door becomes flush with side body.
- After installation, open and close the door to check looseness.
  Replace door open stopper pin when there is looseness.
- When weather-strip is hardened, water leak may develop.
  In such case, replace it with a new one.

Rear Door Removal and Installation

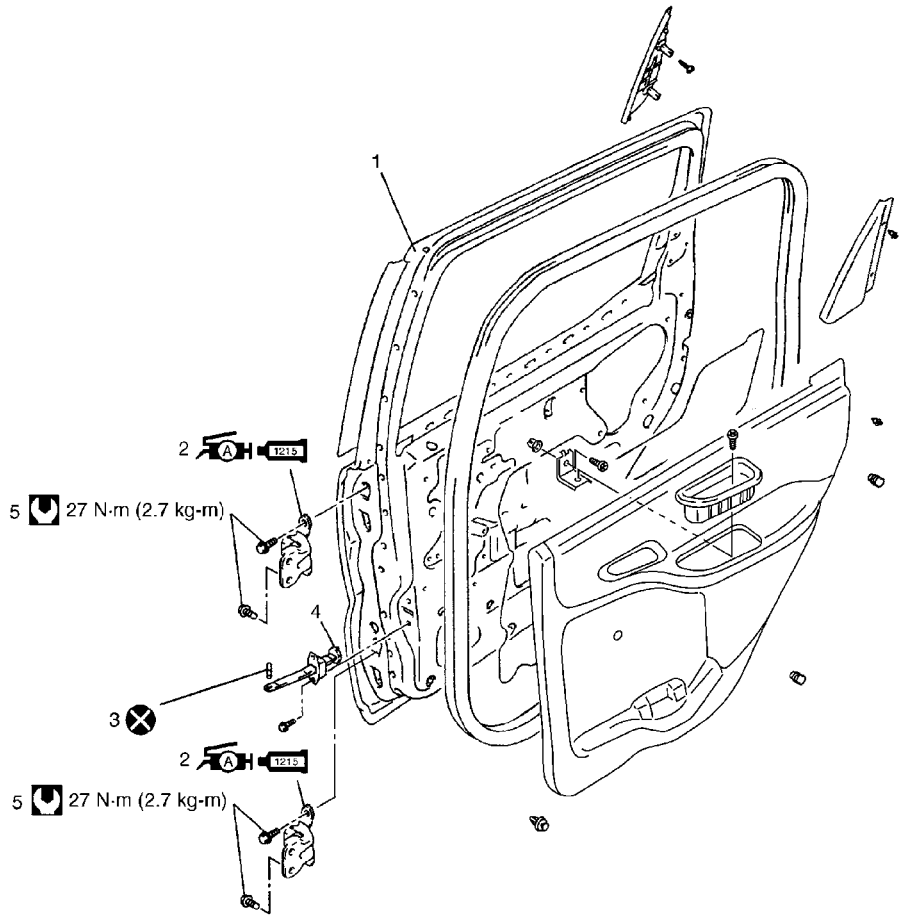

	1. Rear door panel	4. Door open stopper	Do not reuse.
1215	2. Rear door hinge : Apply lithium grease 99000-25010 to rotating part : Apply sealant 99000-31110 to contact face	5. Rear door hinge bolt	
	3. Rear door stopper pin	Tightening torque	

Refer to “Front Door Removal and Installation” in this section noting the following instructions.

- Refer to above figure for tightening torque, grease and sealant.
- Install door open stopper (1) as specified below.

Door open stopper installing direction
Right side door: RR punch mark is upward.
Left side door: RL punch mark is upward.

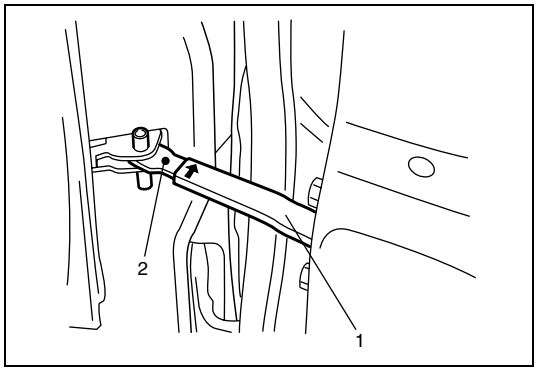

2. Punch mark

Rearend Door Removal and Installation

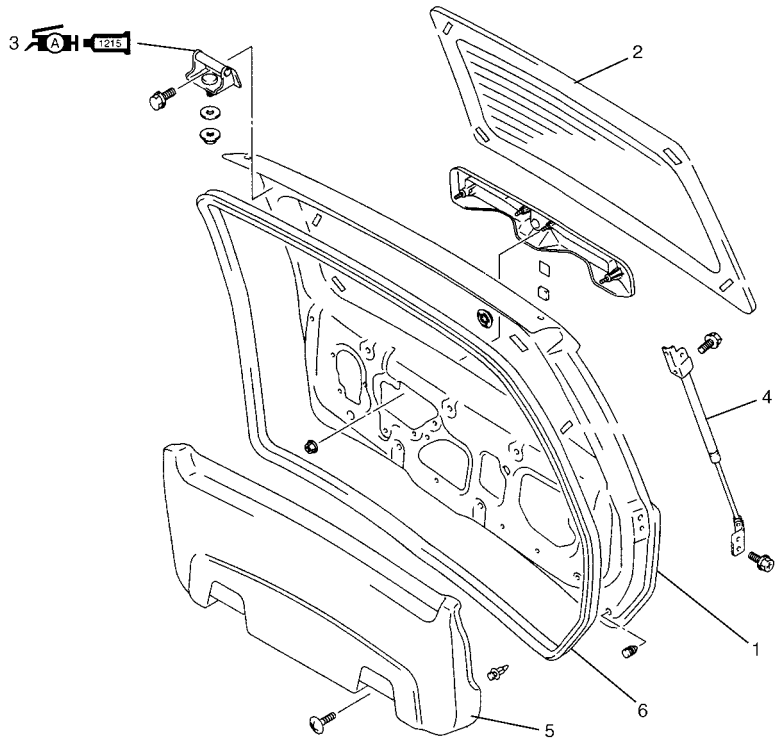

	1. Rearend door panel	4. Rearend door balancer unit
	2. Rearend door window glass	5. Rearend door trim
A 1215	3. Rearend door hinge : Apply lithium grease 99000-25010 to door hinge moving section : Apply sealant 99000-31110 to contact face	6. Weather strip

REMOVAL

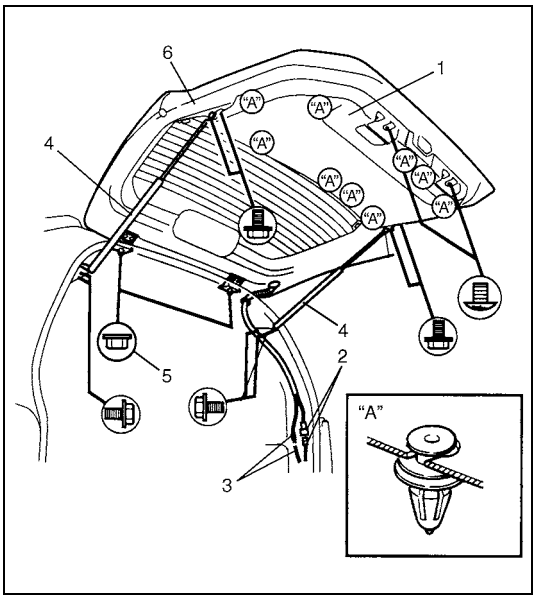

1) Remove rearend door trim (1).
2) Remove related section of head lining and quarter trim.
3) Disconnect rearend door harness connectors (2) and washer hose (3).
4) Remove rearend door balancer (4) (first at its door side and next at its body side).
5) Remove door hinge nuts (5) and remove rearend door assembly (6).
6) Remove wiring harness connectors inside rearend door.

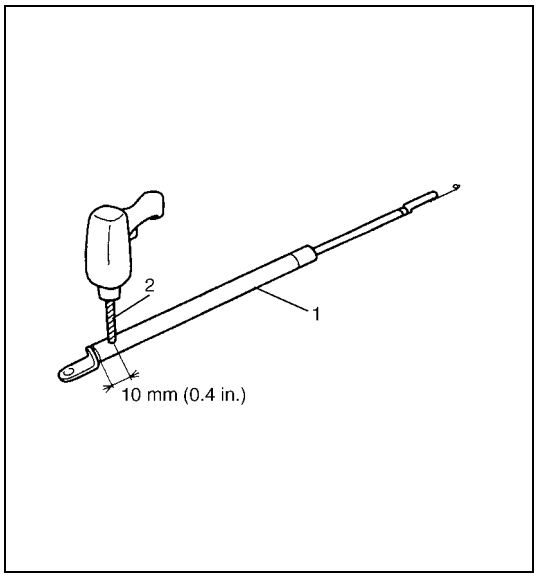

WARNING:

Handling of Rearend Door Balancer (Damper)

- **Do not disassemble balancer (1) because its cylinder is filled with gas.**
- **Handle balancer carefully. Do not scar or scratch exposed surface of its piston rod, and never allow any paint or oil to stick to its surface.**
- **Do not turn piston rod with balancer fully extended.**
- **When discarding removed rearend door balancer (damper), use a 2 – 3 mm (0.08 – 0.12 in.) drill (2) to make a hole as shown.**
- **The gas itself is harmless but it may issue out of the hole together with chips generated by the drill (2). Therefore, be sure to wear goggle.**

INSTALLATION

Reverse removal procedure to install rearend door noting the following instructions.

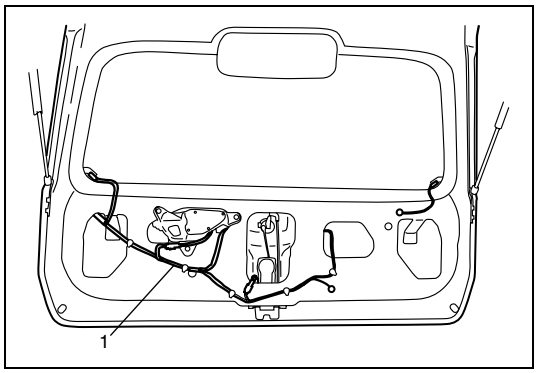

- Secure wiring harness (1).

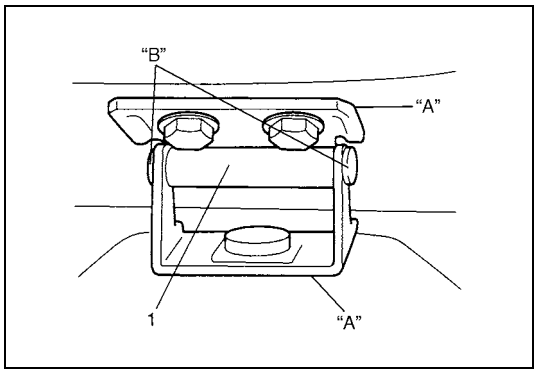

- Apply sealant to contact face "A" of door hinge (1).

"A": Sealant 99000-31110

- Apply grease to rotating part "B" of hinge (1).

"B": Lithium grease 99000-25010

- Adjust door latch striker position by referring "Rearend Door Removal and Installation" in this section.
- Adjust door cushion so that door becomes flush with body.
- Adjust door clearance by loosening door hinge mounting bolts and nuts referring to "Panel Clearance" in this section.

Hood Removal and Installation

REMOVAL

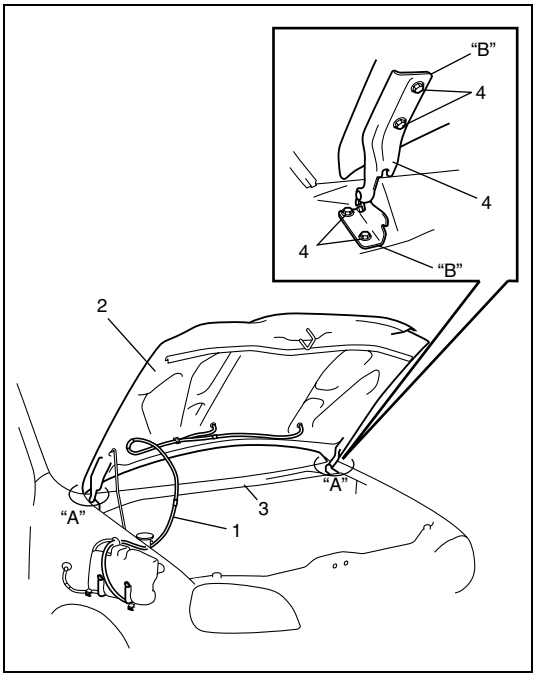

CAUTION:
Place cloth on "A" in figure to prevent from any damage.

1) Remove window washer hose (1) from hood (2).
2) Remove cowl top garnish (3).
3) Remove 4 mounting bolts (4) to detach hood (2).

INSTALLATION

Reverse removal procedure to install hood noting the following instruction.

- Apply sealant to contact face "B" of hood hinge (4).

"B": Sealant 99000-3110

Hood Adjustment

Adjust the following point:

- Hood position adjustment.
  Fore-and-aft and right-and-left adjustment.
  Adjust hood clearance by loosening hood mounting bolts, refer to "Panel Clearance" in this section.

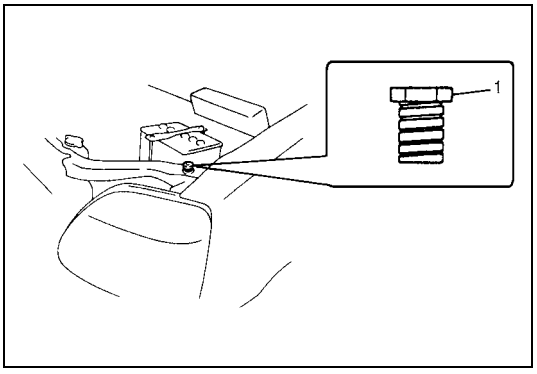

- Vertical adjustment
  If only one side (right or left) of hood is not level with front fender, make it level by tightening or loosening hood cushion (1).

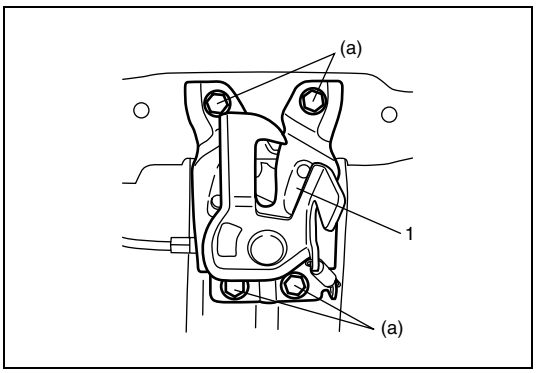

- Hood lock position adjustment
  When installing hood lock (1), bring bolt at highest position and move it in vertical direction for adjustment free from loose to hood striker.

Tightening torque
Hood latch bolts (a): 10 N·m (1.0 kg-m)

Hood Inspection

Check that hood opens and closes smoothly and properly. Lubricate if necessary. Also check that secondary latch operates properly (check that secondary latch keeps hood from opening all the way) and hood locks securely when closed.
Adjust hood locks position if necessary.

Front Fender Removal and Installation

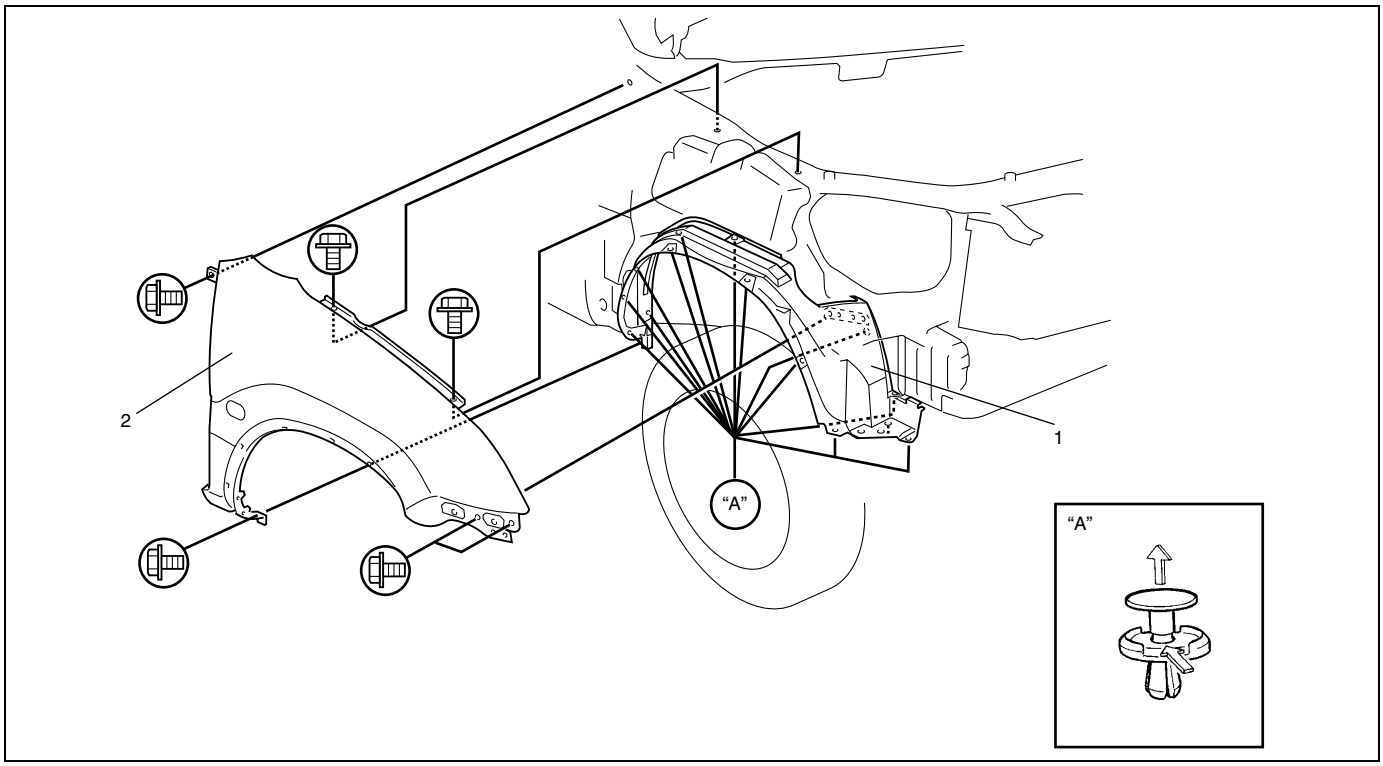

1. Front fender lining	2. Front fender

REMOVAL

1) Remove front bumper.
2) Remove headlight assembly. Refer to "WARNING" in Section 8.
3) Disconnect side turn signal lamp connector.
4) Remove front fender lining.
5) Remove front fender.

INSTALLATION

Reverse removal procedure to install front fender noting the following instructions.

- If paint on fender bolt is peeled off, be sure to apply paint again.
- Adjust panel clearance referring to "Panel Clearance" in this section.

Front Bumper and Rear Bumper Removal and Installation

When removing or installing front bumper and rear bumper, refer to the figure.

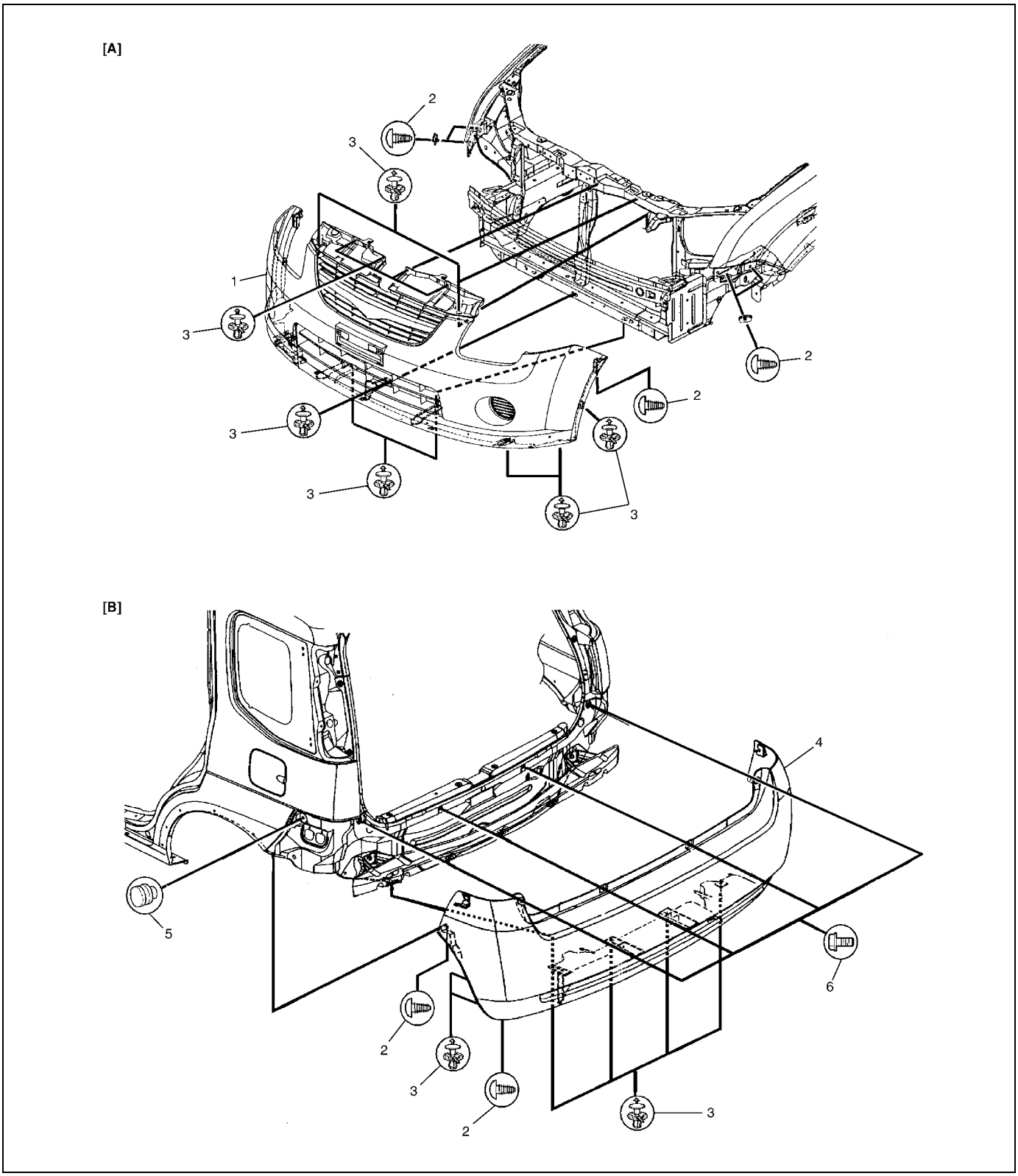

[A]: Front bumper	1. Front bumper	3. Clip	5. Damper
[B]: Rear bumper	2. Screws	4. Rear bumper	6. Bolt

Bumper Extension and Splash Guard Removal and Installation (If Equipped)

When removing or installing bumper extension and splash guard, refer to the figure.

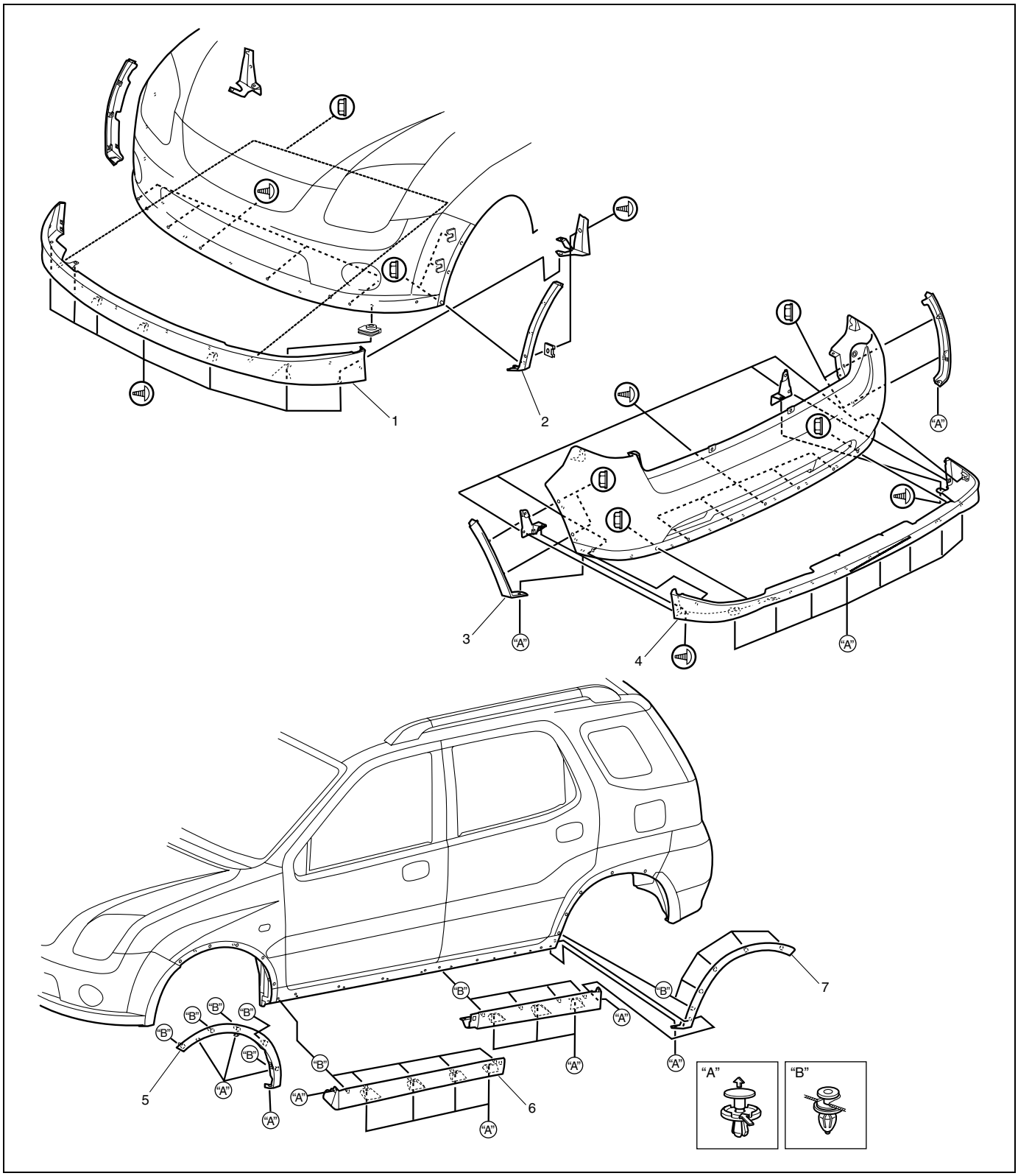

1. Front bumper extension	3. Rear bumper extension	5. Front fender splash guard	7. Rear fender splash guard
2. Front bumper side extension	4. Rear bumper side extension	6. Side sill splash guard	

Rearend Door Spoiler Removal and Installation (If Equipped)

When removing or installing rearend door spoiler, refer to the figure.

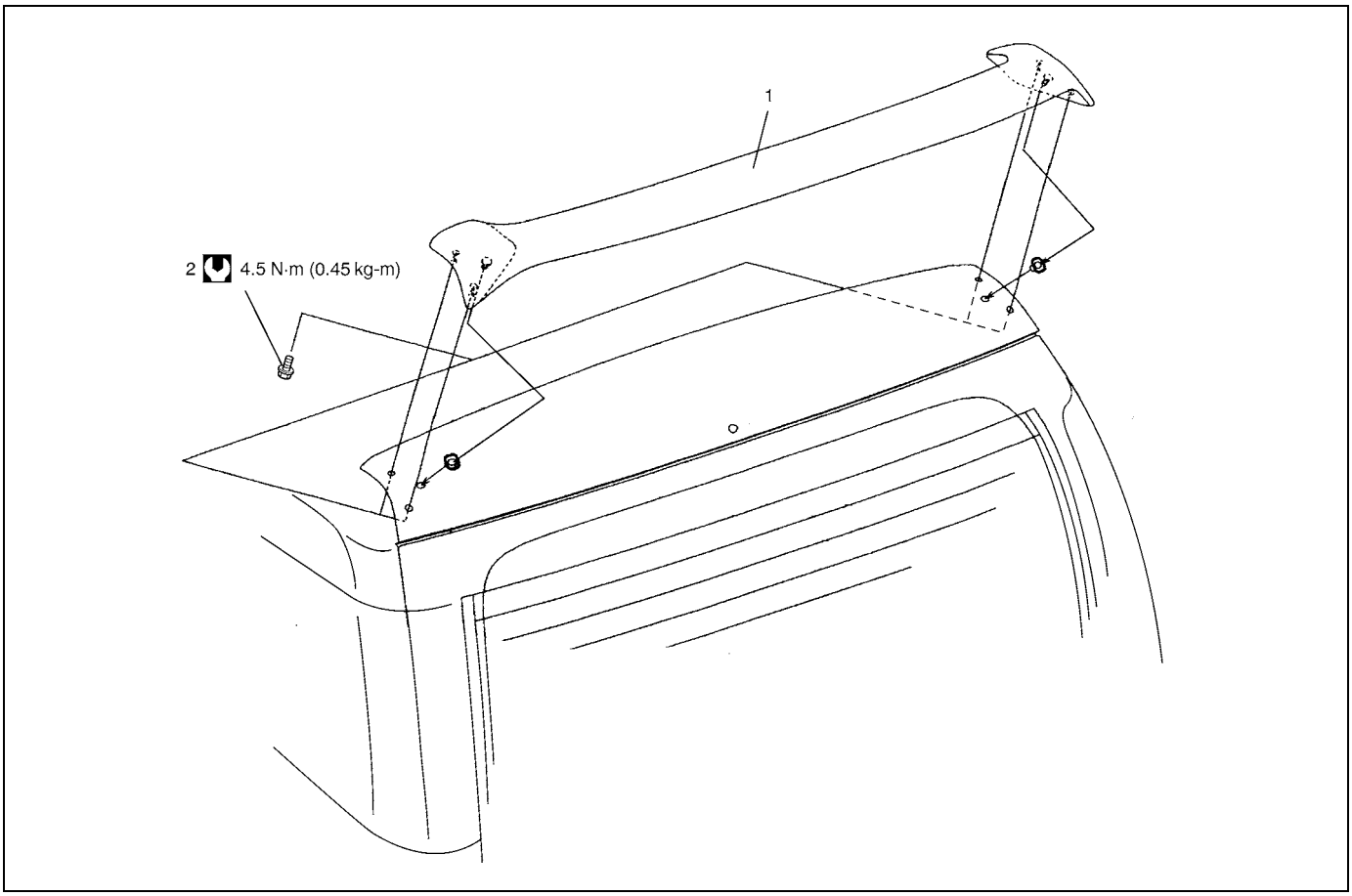

1. Rearend door spoiler	2. Rearend door spoiler mounting bolt	Tightening torque

Roof Rail Removal and Installation (If Equipped)

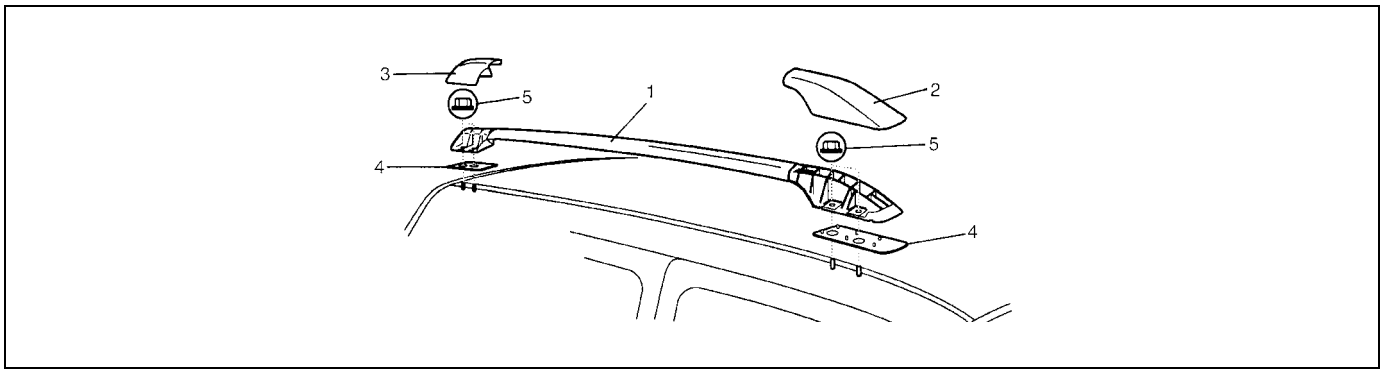

1. Roof rail	3. Rear cap	5. Nut
2. Front cap	4. Base seal	

REMOVAL

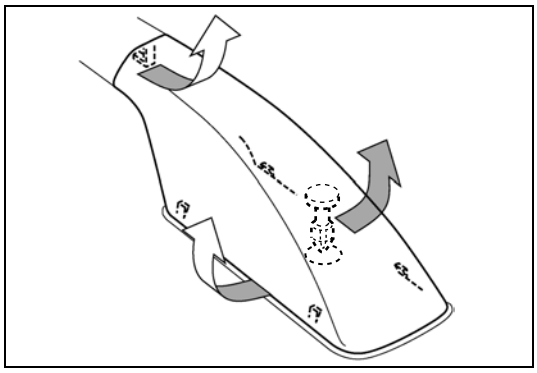

1) Remove roof rail front and rear caps as shown in figure.
2) Remove nuts.
3) Remove roof rail.

INSTALLATION

Reverse removal procedure for installation.
Confirm that each roof rail fixing nut is tightened securely.

Body Dimensions

Engine room

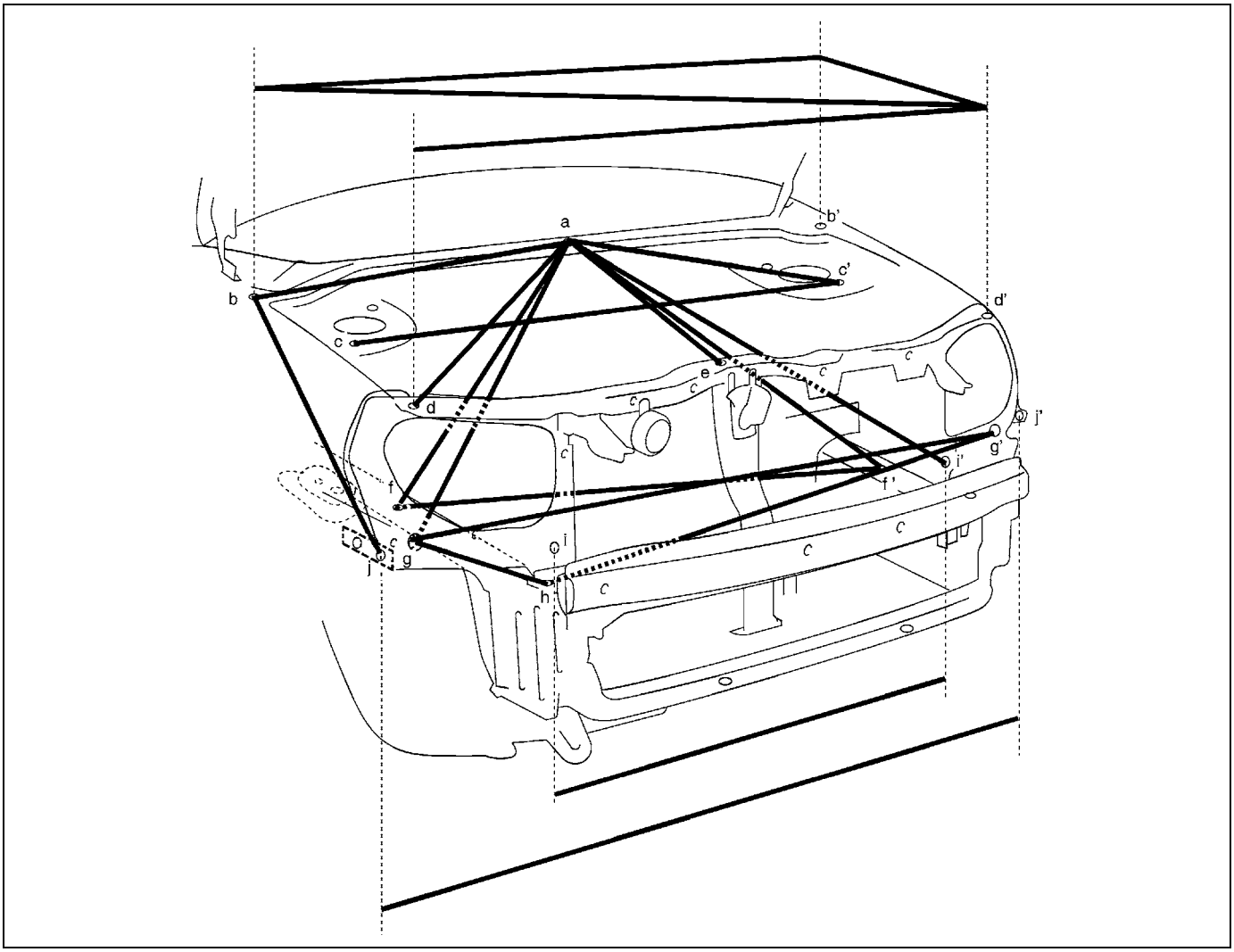

a. Garnish installation center hole (ϕ5)	e. Hood cushion installation hole	i (i'). Head light installation hole
b (b'). Front fender installation hole	f (f'). Engine mounting installation front hole	j (j'). Front fender installation hole
c (c'). Strut installation front hole	g (g'). Jig hole (ϕ15 mm)	
d (d'). Front fender installation hole	h. Bumper member upper side installation hole	

Hole to hole distance

a-b: 673 mm (26.50 in.)	**a-i': 799 mm (31.46 in.)**	**f-f': 952 mm (37.48 in.)**
a-c': 583 mm (22.95 in.)	**b-b': 1340 mm (52.76 in.)**	**g-g': 1315 mm (51.77 in.)**
a-d: 760 mm (29.92 in.)	**b-d': 1393 mm (58.84 in.)**	**g-h: 230 mm (9.06 in.)**
a-e: 599 mm (23.58 in.)	**b-j: 671 mm (26.42 in.)**	**g'-h: 1139 mm (44.84 in.)**
a-f: 774 mm (30.47 in.)	**b'-d': 401 mm (15.79 in.)**	**i-i': 922 mm (36.30 in.)**
a-f': 802 mm (31.57 in.)	**c-c': 1098 mm (43.23 in.)**	**j-j': 1343 mm (52.87 in.)**
a-g: 890 mm (35.04 in.)	**d-d': 1328 mm (52.28 in.)**	

Rearend door

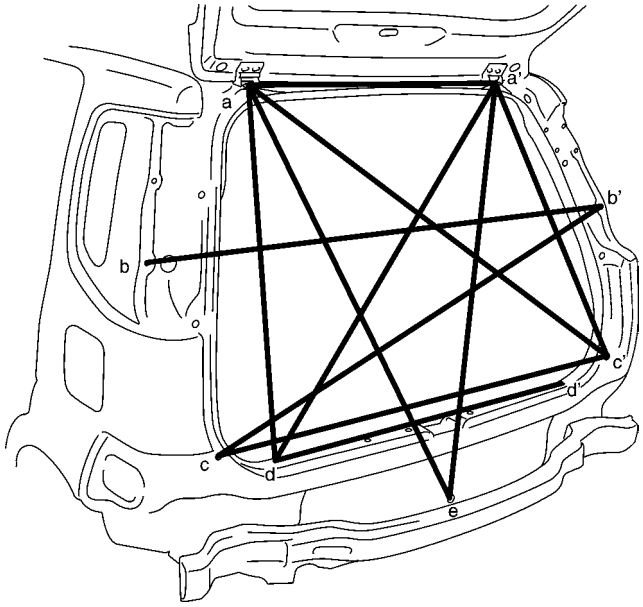

a (a'). Rearend door hinge installation hole	d (d'). Tail end member trim installation hole
b (b'). Rear combination lamp installation hole	e. Center jig hole (OVAL)
c (c'). Rear bumper installation hole	

Hole to hole distance

a-a': 725 mm (28.54 in.)	**a'-c': 794 mm (31.26 in.)**	**b'-c: 1340 mm (52.76 in.)**
a-c': 1230 mm (48.43 in.)	**a'-d: 1130 mm (44.49 in.)**	**c-c': 1215 mm (47.83 in.)**
a-d: 799 mm (31.46 in.)	**a'-e: 1119 mm (44.06 in.)**	**d-d': 875 mm (34.45 in.)**
a-e: 1119 mm (44.06 in.)	**b-b': 1340 mm (52.76 in.)**	

Side body

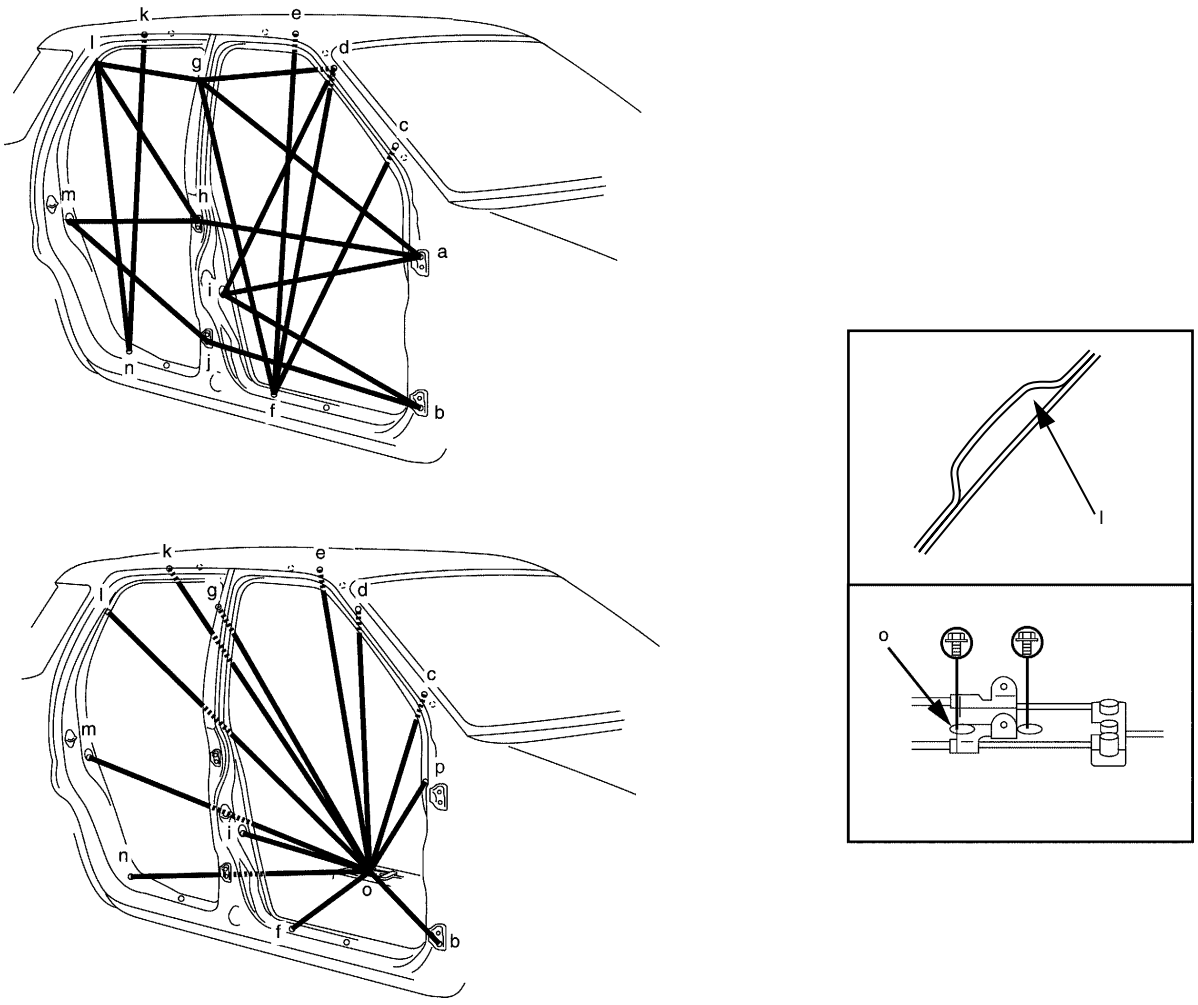

a. Front door upper hinge installation hole	g. Front shoulder adjuster installation upper hole	m. Rear door switch installation hole
b. Front door lower hinge installation hole	h. Rear door upper hinge installation hole	n. Side soil scuff installation rear hole
c. Front pillar inner trim installation lower hole	i. Front door switch installation hole	o. Parking brake cable bracket installation rear hole
d. Front pillar inner trim installation upper hole	j. Rear door lower hinge installation hole	p. Steering support member installation upper hole
e. Assistant grip installation front hole	k. Assistant grip installation hole	
f. Side sill scuff installation rear hole	l. Rear door rear notch	

Hole to hole distance

a-g:	**1155 mm (45.47 in.)**	**d-i:**	**819 mm (32.24 in.)**	**i-o:**	**742 mm (29.21 in.)**
a-h:	**942 mm (37.09 in.)**	**d-o:**	**1250 mm (49.21 in.)**	**j-m:**	**895 mm (35.24 in.)**
a-i:	**901 mm (35.47 in.)**	**e- f:**	**1061 mm (41.77 in.)**	**k-n:**	**1074 mm (42.28 in.)**
b-i:	**891 mm (35.08 in.)**	**e-o:**	**1232 mm (48.50 in.)**	**k-o:**	**1321 mm (52.01 in.)**
b-j:	**902 mm (35.51 in.)**	**f-g:**	**1084 mm (42.68 in.)**	**l-n:**	**953 mm (89.30 in.)**
b-o:	**1223 mm (48.15 in.)**	**f-o**	**785 mm (30.91 in.)**	**l-o:**	**1326 mm (52.20 in.)**
c-f:	**883 mm (34.76 in.)**	**g-l:**	**669 mm (26.34 in.)**	**m-o:**	**1112 mm (43.78 in.)**
c-o:	**1281 mm (50.43 in.)**	**g-o:**	**1177 mm (46.34 in.)**	**n-o:**	**813 mm (32.00 in.)**
d-f:	**992 mm (39.06 in.)**	**h-l:**	**850 mm (79.65 in.)**	**o-p:**	**1255 mm (49.41 in.)**
d-g:	**539 mm (21.22 in.)**	**h-m:**	**813 mm (32.01 in.)**		

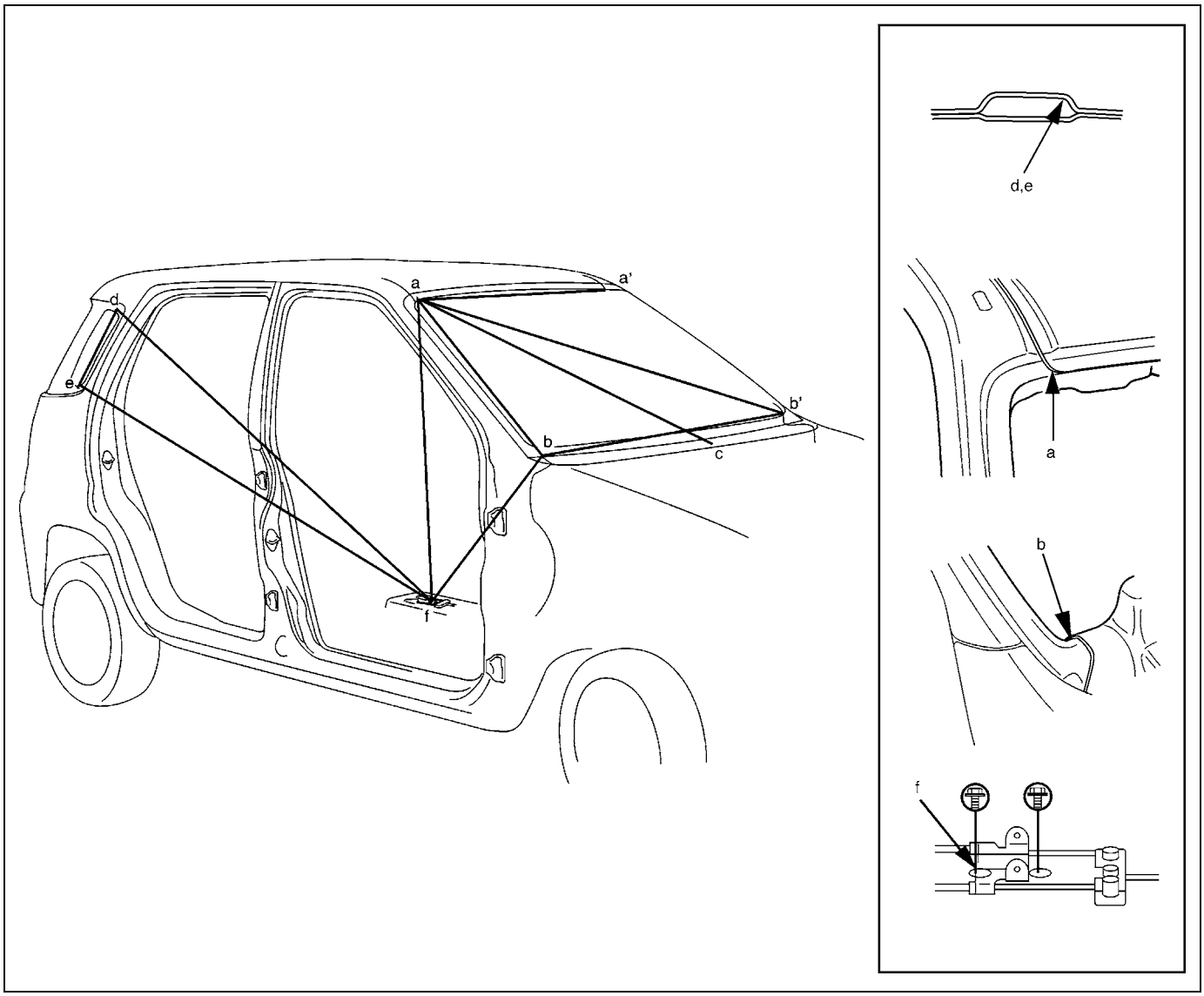

a (a'). Front end of front windshield upper installation section	d. Quarter window upper side notch
b (b'). Front end of front windshield lower installation section	e. Quarter window lower side notch
c. Garnish installation center hole (ϕ5 mm)	f. Parking brake cable bracket installation rear hole

Hole to hole distance

a-a': 1043 mm (41.06 in.)	**a-f: 1281 mm (50.43 in.)**	**d-f: 1496 mm (58.90 in.)**
a-b: 687 mm (27.05 in.)	**b-b': 1337 mm (52.64 in.)**	**e-f: 1452 mm (57.17 in.)**
a-b': 1366 mm (53.78 in.)	**b-f: 1412 mm (55.59 in)**	
a-c: 1032 mm (40.63 in)	**d-e: 302 mm (11.89 in)**	

Under body

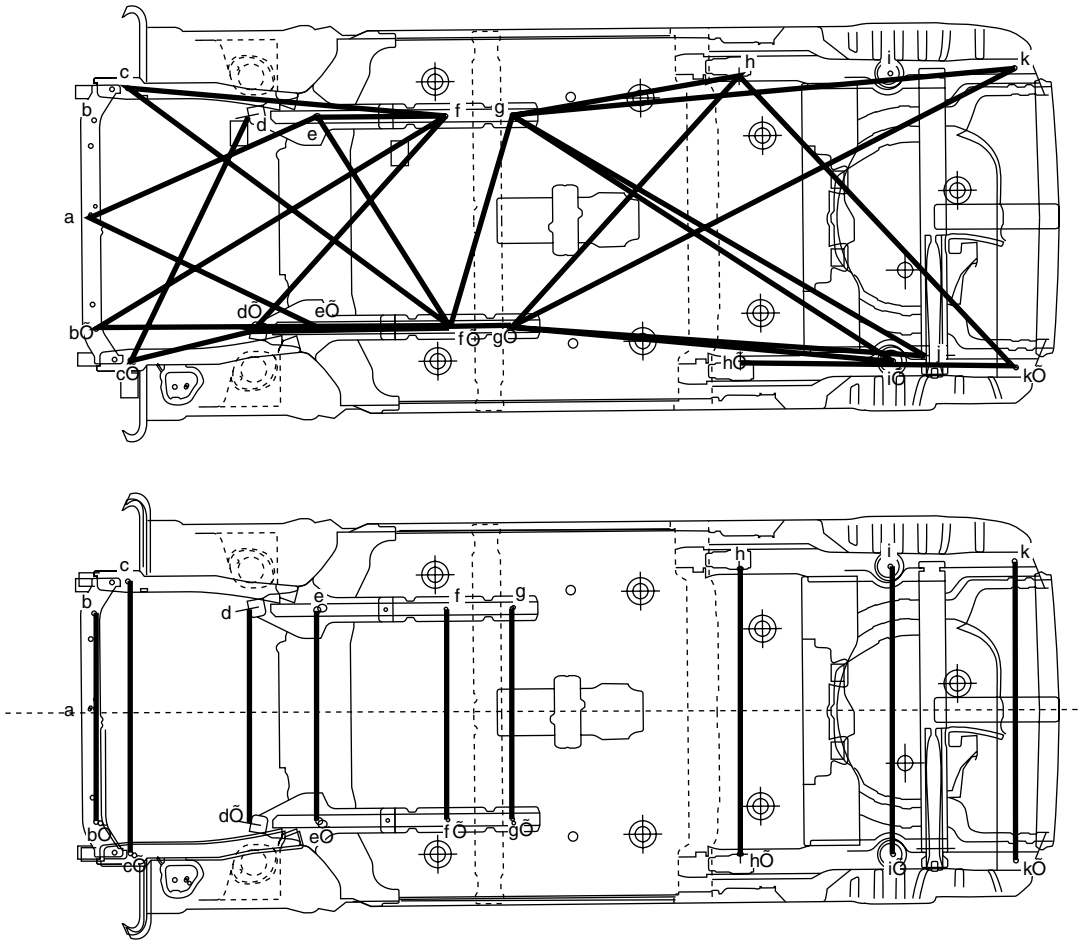

a. Jack bracket installation hole	g (g'). Jig hole (ϕ10 mm)
b (b'). Front stabilizer bracket front installation hole	h (h'). Trailing arm installation hole
c (c'). Front stabilizer bracket rear installation hole	i (i'). Bump stopper installation hole
d (d'). Suspension control arm installation hole	j. Lateral rod installation hole
e (e'). Jig hole (ϕ15 mm)	k (k'). Jig hole (ϕ16 mm)
f (f'). Jig hole (ϕ10 mm)	

Hole to hole distance

a-e: 862 mm (33.94 in.)	**d'-f': 710 mm (27.95 in.)**	**g'-h: 1202 mm (47.32 in.)**
a-e': 909 mm (35.79 in.)	**e-e': 754 mm (29.68 in.)**	**g'-i': 1384 mm (54.45 in.)**
b-b': 740 mm (29.13 in.)	**e-f: 471 mm (18.54 in.)**	**g'-j: 1496 mm (58.90 in.)**
b-f: 1464 mm (57.64 in.)	**e-f': 889 mm (35.00 in.)**	**g'-k: 1940 mm (76.38 in.)**
b-f': 1259 mm (49.57 in.)	**f-f': 754 mm (29.68 in.)**	**h-h': 1013 mm (39.88 in.)**
c-c': 968 mm (38.11 in.)	**f'-g: 791 mm (31.14 in.)**	**h-k': 1387 mm (54.61 in.)**
c-f: 1148 mm (45.20 in.)	**f'-g': 240 mm (9.45 in.)**	**h'-k': 913 mm (35.94 in.)**
c-f': 1431 mm (56.34 in.)	**g-g': 754 mm (29.68 in.)**	**i-i': 1028 mm (40.47 in.)**
c'-d: 969 mm (38.15 in.)	**g-h: 826 mm (32.52 in.)**	**k-k': 1076 mm (42.36 in.)**
c'-d': 451 mm (17.76 in.)	**g-i': 1641 mm (64.61 in.)**	
d-d': 760 mm (29.92 in.)	**g-j: 1723 mm (67.83 in.)**	
d'-f': 1038 mm (40.87 in.)	**g-k: 1718 mm (67.64 in.)**	

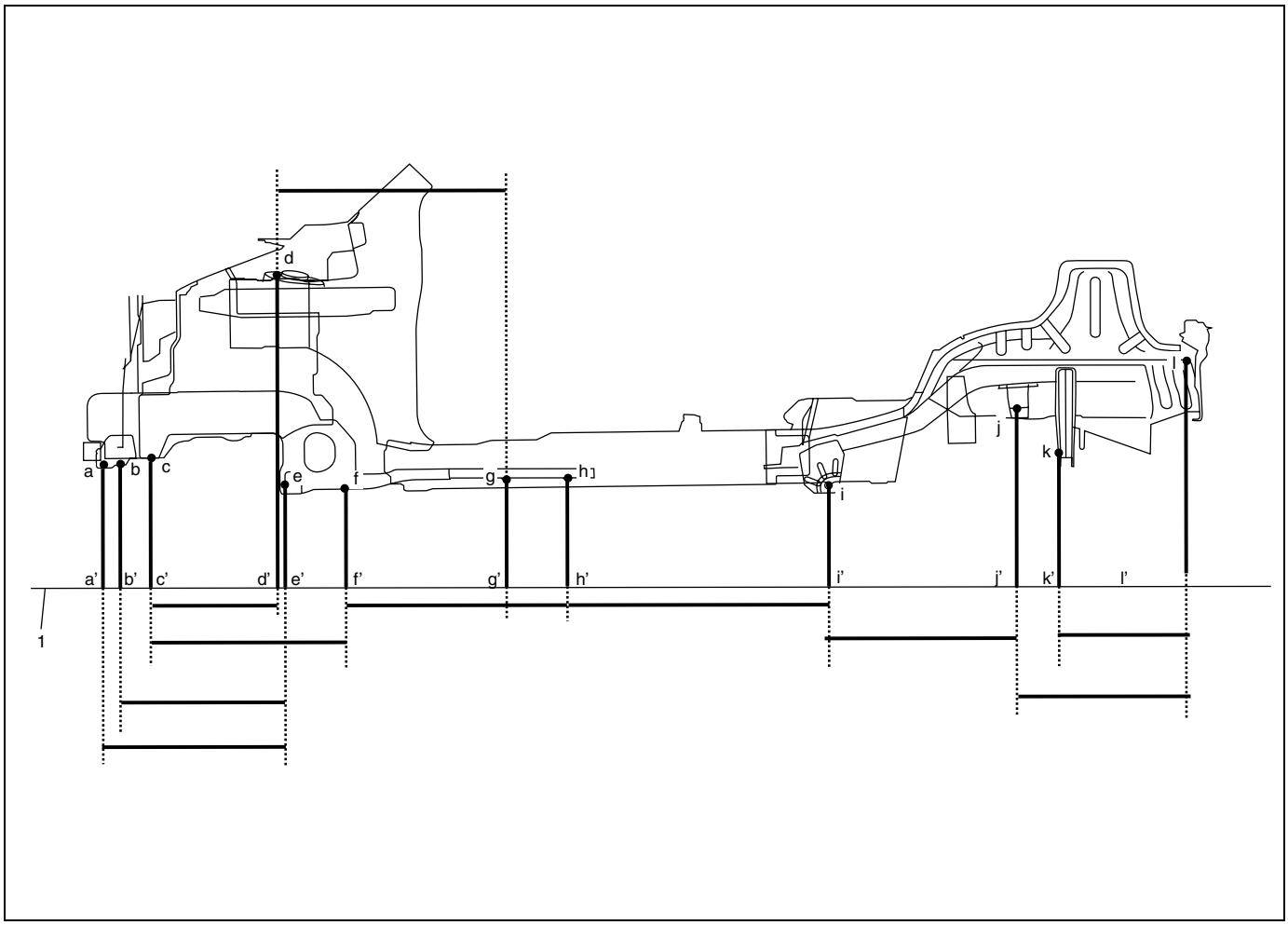

1. Virtual baseline	g. Jig hole (ϕ14 mm)
a. Jack bracket installation hole	h. Jig hole (ϕ14 mm)
b. Front stabilizer bracket front installation hole	i. Trailing arm installation hole
c. Front stabilizer bracket rear installation hole	j. Bump stopper installation hole
d. Strut installation front hole	k. Lateral rod installation hole
e. Suspension control arm installation front hole	l. Jig hole (ϕ16 mm)
f. Jig hole (ϕ15 mm)	

Point to point distance

a-a': 131 mm (5.16 in.)	**e-e': 77 mm (3.03 in.)**	**i-i': 100 mm (3.94 in.)**
a-e': 556 mm (21.89 in.)	**e'-f': 240 mm (9.45 in.)**	**i'-j': 546 mm (21.50 in.)**
b-b': 131 mm (5.16 in.)	**f-f': 53 mm (2.07 in.)**	**j-j': 292 mm (11.50 in.)**
b'-e': 548 mm (21.57 in.)	**f'-g': 470 mm (18.50 in.)**	**j'-l': 324 mm (12.76 in.)**
c-c': 161 mm (6.34 in.)	**g-g': 79 mm (3.11 in.)**	**k-k': 139 mm (5.47 in.)**
c'-d': 391 mm (15.39 in.)	**g'-h': 240 mm (9.45 in.)**	**k'-l': 194 mm (7.64 in.)**
c'-e': 430 mm (16.93 in.)	**h-h': 79 mm (3.11 in.)**	**l-l' 374 mm (14.74 in.)**
d-d': 650 mm (25.59 in.)	**h'-i' 815 mm (32.09 in.)**	
d'-g': 749 mm (29.49 in.)		

Panel Clearance

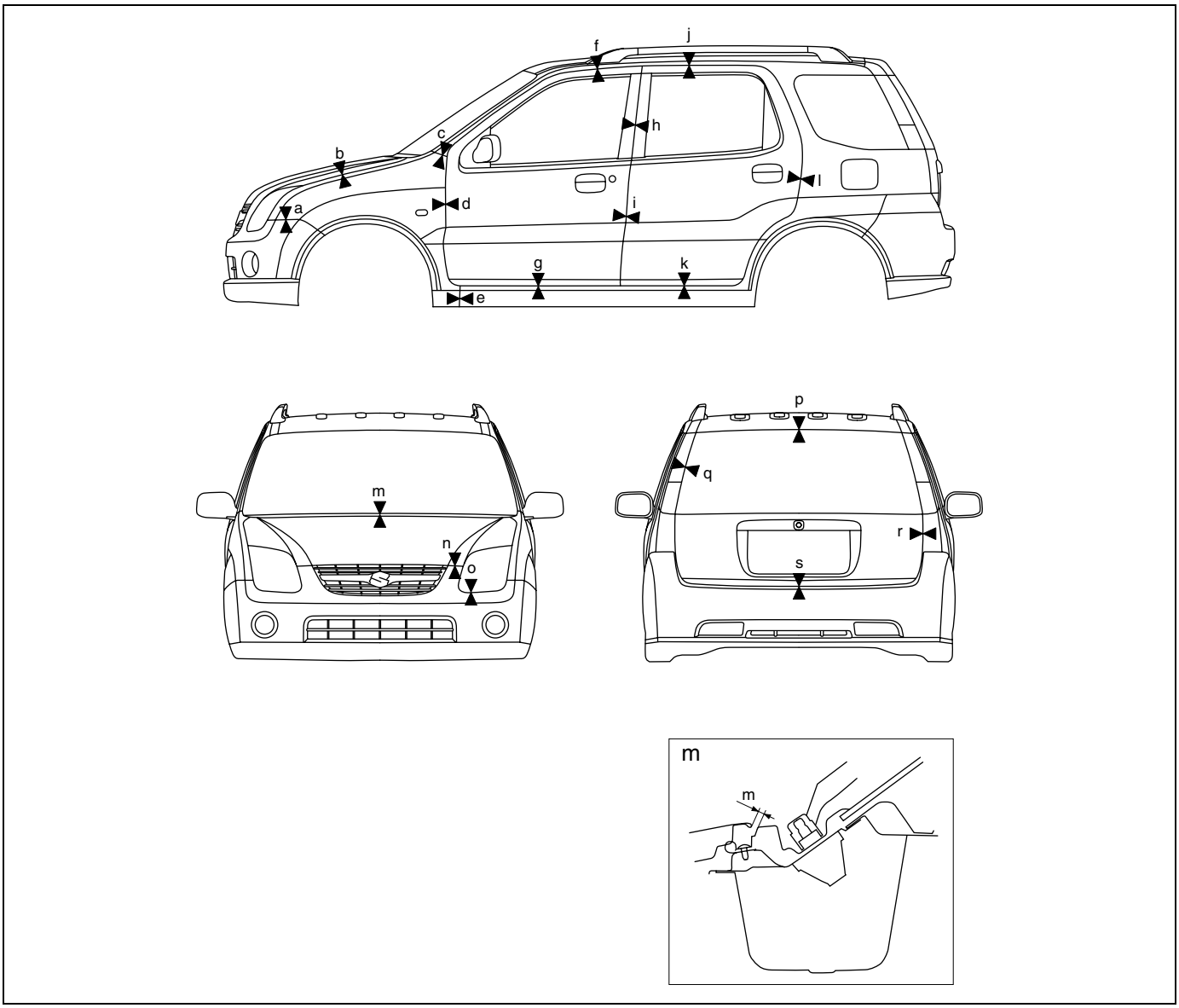

Panel to panel distance

a: 1.0 – 3.0 mm (0.039 – 0.138 in.)	**h: 3.7 – 5.7 mm (0.146 – 0.224 in.)**	**o: 3.5 – 5.5 mm (0.138 – 0.217 in.)**
b: 2.5 – 4.5 mm (0.098 – 0.177 in.)	**i: 4.2 – 6.2 mm (0.165 – 0.244 in.)**	**p: 7.9 – 9.4 mm (0.311 – 0.370 in.)**
c: 1.6 – 3.6 mm (0.063 – 0.142 in.)	**j: 5.0 – 7.0 mm (0.197 – 0.276 in.)**	**q: 5.0 – 7.0 mm (0.197 – 0.276 in.)**
d: 4.2 – 6.2 mm (0.165 – 0.244 in.)	**k: 4.8 – 6.8 mm (0.189 – 0.268 in.)**	**r: 3.7 – 5.7 mm (0.146 – 0.244 in.)**
e: 1.7 – 3.7 mm (0.067 – 0.146 in.)	**l: 3.7 – 5.7 mm (0.146 – 0.224 in.)**	**s: 5.3 – 7.3 mm (0.209 – 0.287 in.)**
f: 4.8 – 6.8 mm (0.189 – 0.268 in.)	**m: 4.8 – 6.8 mm (0.189 – 0.268 in.)**	
g: 4.8 – 6.8 mm (0.189 – 0.268 in.)	**n: 7.8 – 9.8 mm (0.307 – 0.386 in.)**	

Instrumentation and Driver Information

Instrument Panel Removal and Installation

WARNING:
See WARNING at the beginning of this section.

REMOVAL

1) Disconnect negative cable at battery.
2) Disable air bag system, if equipped. Refer to “Disabling air bag system” in Section 10B.

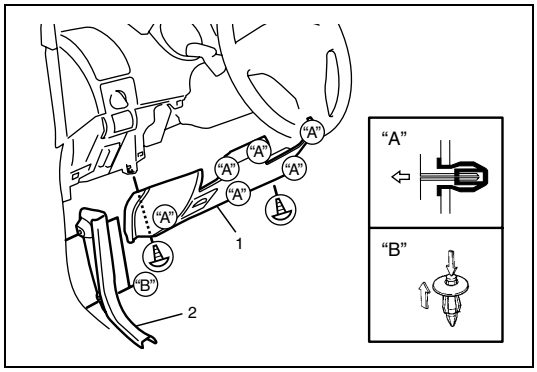

3) Remove steering column hole cover (1).
4) Remove dash side trims (2).
5) Remove steering column assembly referring to “Steering Column Removal and Installation” in Section 3C.

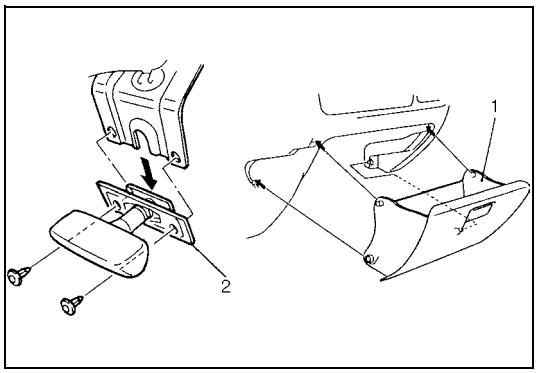

6) Remove glove box (1).
7) Remove hood latch release lever (2).
8) Disconnect instrument panel harness connectors, antenna and heater control cables which need to be disconnected for removal for instrument panel.
9) Remove instrument panel ground wire.

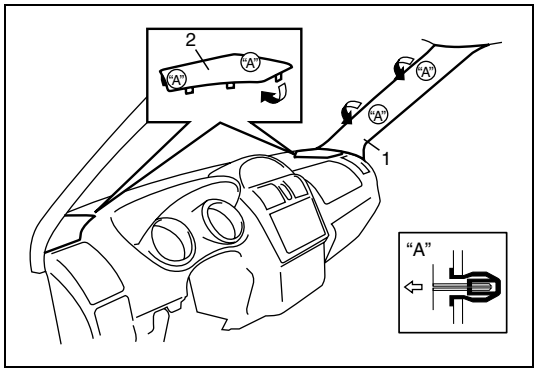

10) Remove front pillar trims (1).
11) Remove speaker covers (2).

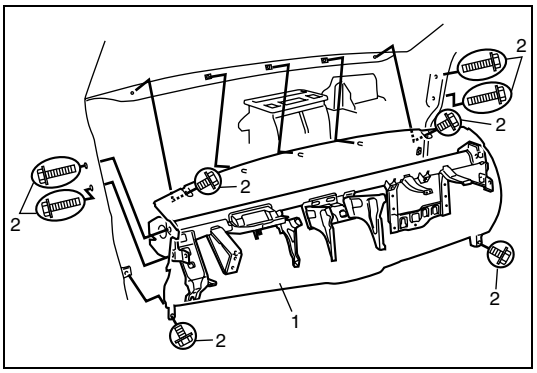

12) Remove instrument panel mounting bolts (2).
13) Remove instrument panel (1) with steering support member and instrument panel harness.

INSTALLATION

Reverse removal procedure to install instrument panel noting the following instructions.

- When installing each part, be careful not to catch any cable or wiring harness.
- Tighten instrument panel mounting bolts (1) to specified torque.

Tightening torque
Instrument panel mounting bolts
(a): 23 N·m (2.3 kg-m)

- When installing steering column assembly. Refer to “Steering Column Removal and Installation” in Section 3C.
- Adjust heater control cables. Refer to “Heater Unit Removal and Installation” in Section 1A.
- Enable air bag system if equipped. Refer to “Enabling air bag system” in Section 10B.

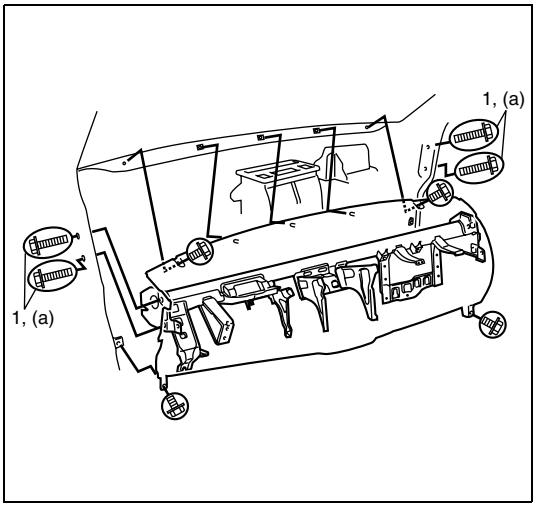

Seats

Front Seat Removal and Installation

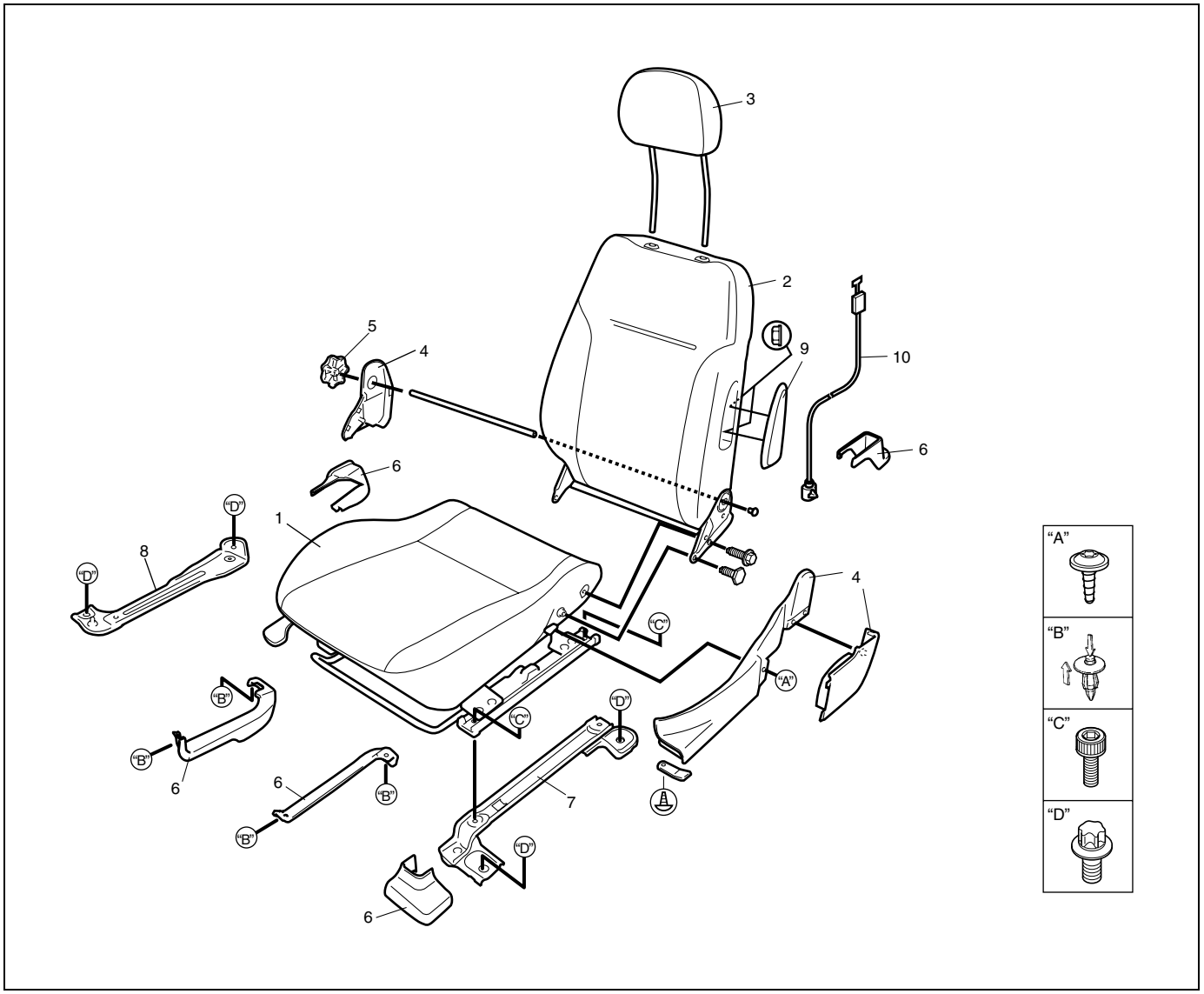

1. Seat cushion assembly	4. Cover	7. Seat adjuster left bracket	10. Side air bag harness (if equipped)
2. Seat back	5. Knob	8. Seat adjuster light bracket	Tightening torque
3. Headrest	6. Cover	9. Side air bag module (if equipped)	

REMOVAL

1) Remove console box.
2) Disable air bag system referring to “Disabling air bag system” in Section 10B.
3) Disconnect heat seater coupler and side air bag coupler, if equipped.
4) Remove 4 mounting bolts to remove seat assembly.
5) Disassemble and repair seat as necessary.

INSTALLATION

Reverse removal procedure to install front seat.
Torque to specifications as shown in above figure.

Rear Seat Removal and Installation

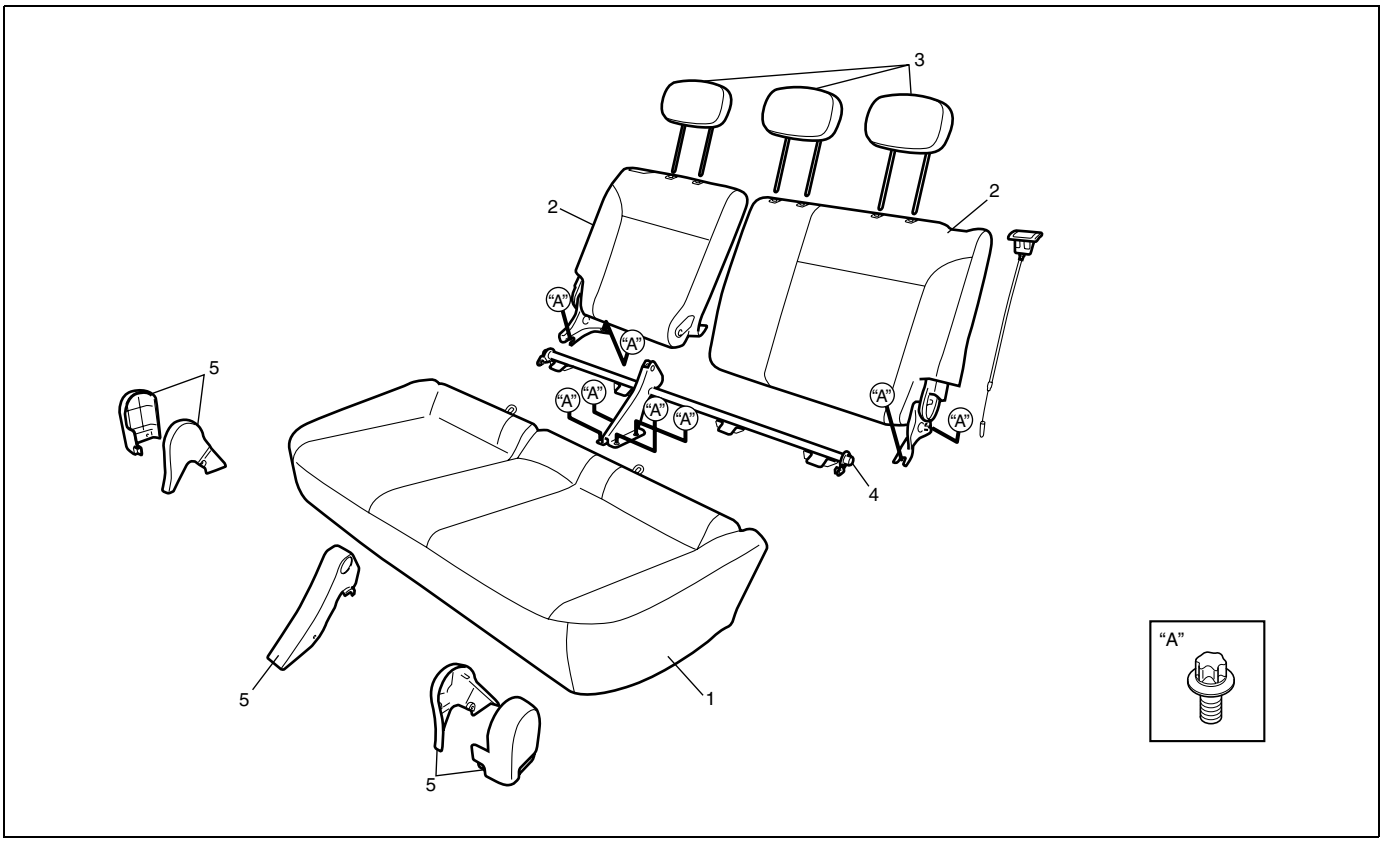

1. Seat cushion	3. Headrest	5. Cover
2. Seat back	4. Rear seat back bracket	Tightening torquer

REMOVAL

1) Remove seat cushion.
2) Remove 3 seat back bolts to remove seat back.
3) Disassemble and repair seat as necessary.

INSTALLATION

Reverse removal procedure to install rear seat.
Torque to specifications as shown in above figure.

Security and Locks

Front Door Lock Assembly Removal and Installation

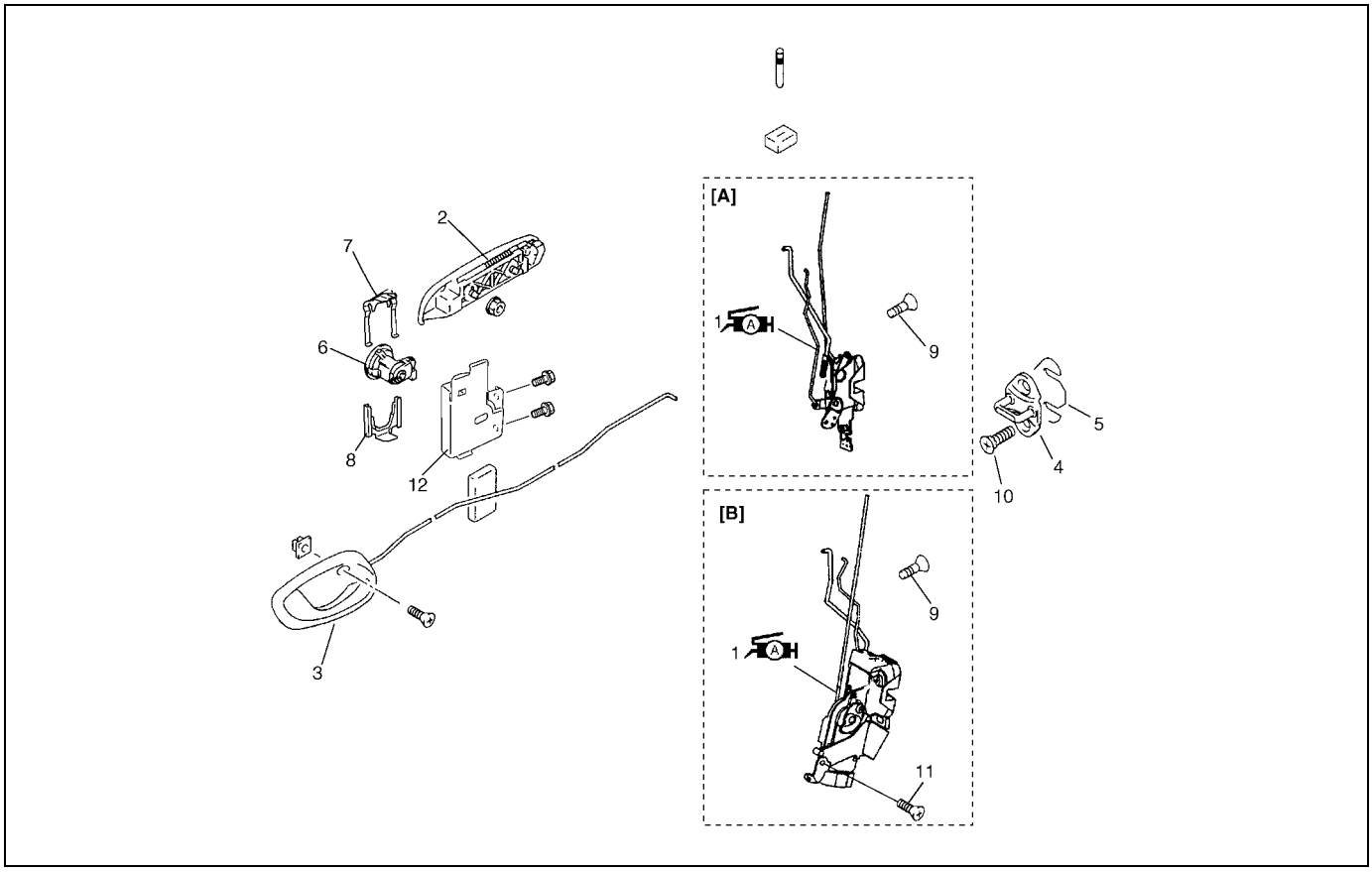

	[A]: Without power door lock	4. Latch striker	9. Door latch screw
	[B]: With power door lock	5. Shim	10. Door latch striker screw
A H	1. Front door latch assembly : Apply lithium grease 99000-25010 to sliding part	6. Key cylinder	11. Door latch actuator screw
	2. Outside handle	7. Key cylinder upper retainer	12. Key cylinder protector
	3. Inside handle bezel	8. Key cylinder lower retainer	

REMOVAL

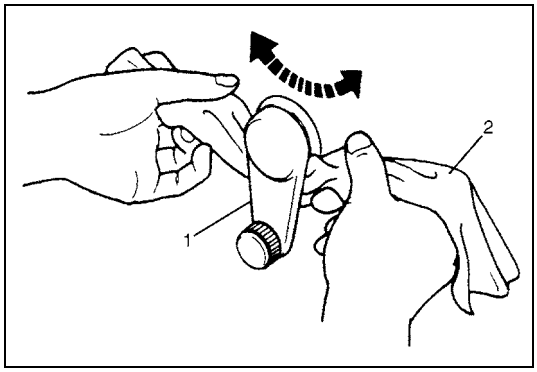

1) Remove window regulator handle (1) (if equipped).
   For its removal, push up snap off by using a cloth (2) as shown in figure.

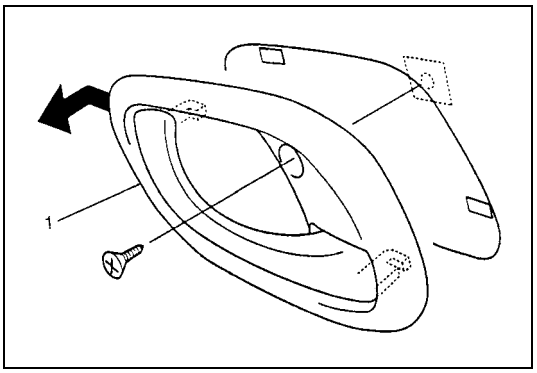

2) Remove inside handle bezel (1).

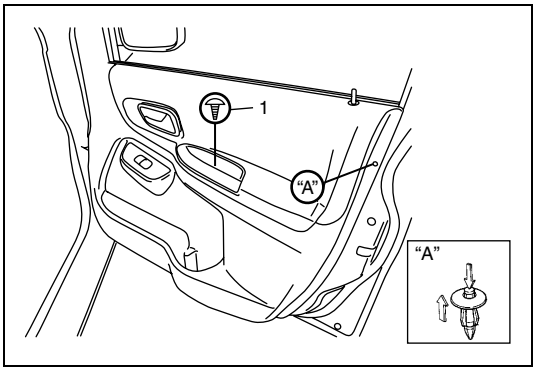

3) Remove mirror inner garnish.
4) Loosen door trim mounting screw (1).

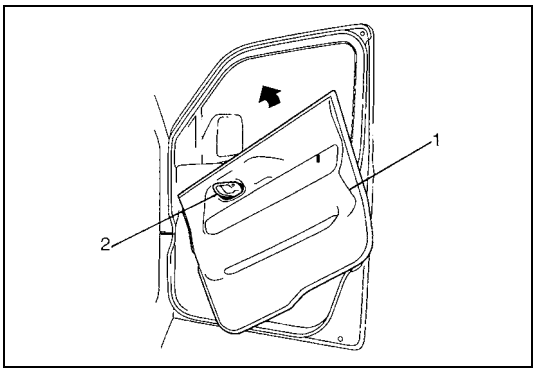

5) Remove door trim (1).
   With inside handle bezel (2) tilted as shown in figure.
6) Disconnect power window switch and mirror switch lead wire at coupler (if equipped).

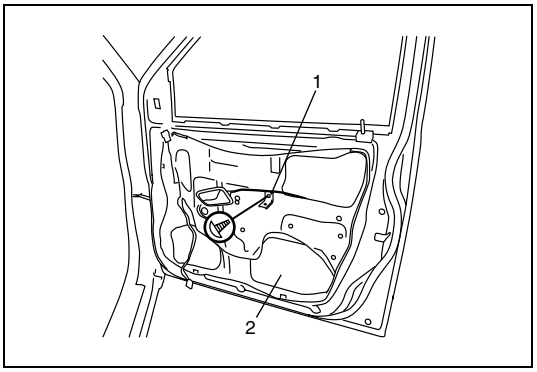

7) Remove door trim bracket (1).
8) Remove door sealing cover (2).
9) Raise window all the way up.

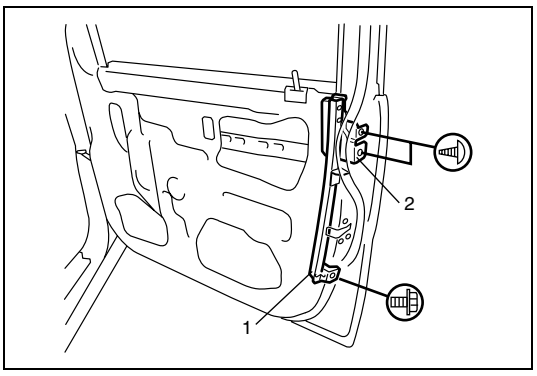

10) Remove door sash (1).
11) Remove key cylinder protector (2).

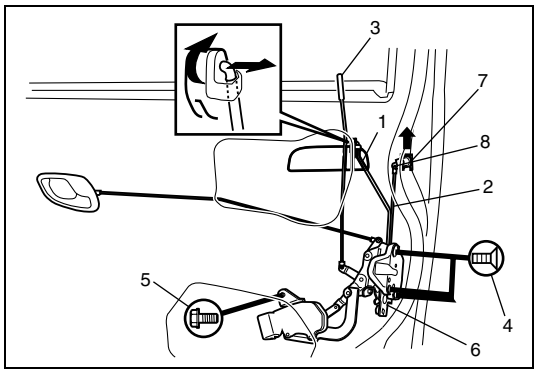

12) Disconnect door opening control rod (1) from outside handle.
13) Disconnect door latch control rod (2).
14) Disconnect door lock motor lead wire at coupler (if equipped).
15) Remove door lock knob (3).
16) Loosen door latch screw (4), door latch actuator bolt (5) (if equipped with power door lock) and remove door lock assembly (6).

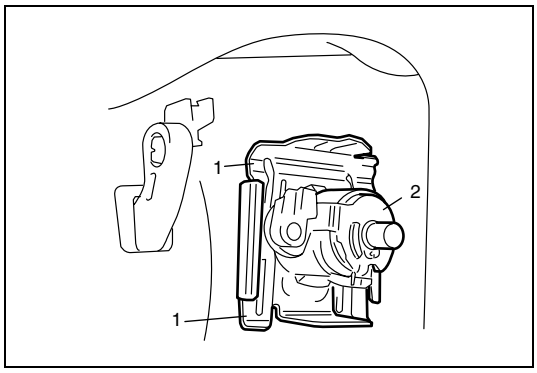

17) Remove key cylinder retainers (1).
18) Remove key cylinder (2).

INSTALLATION

Reverse removal procedure to install front door lock assembly noting the following instructions.

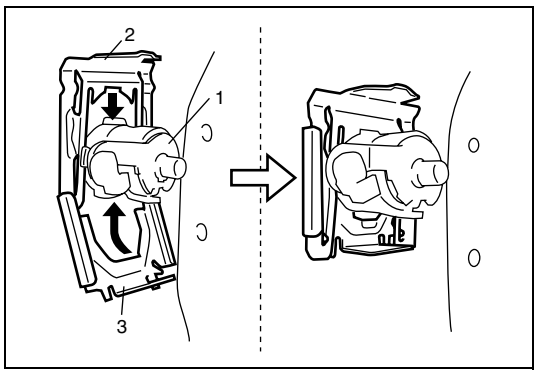

- Install key cylinder as fallows:

a) Install key cylinder (1) to front door panel.
b) Insert key cylinder upper retainer (2).
c) Insert key cylinder lower retainer (3).
d) Insert the retainers all the way until lower retainer tab engages with upper retainer cutout.

- Apply grease to sliding parts of door latch assembly.

Grease 99000-25010

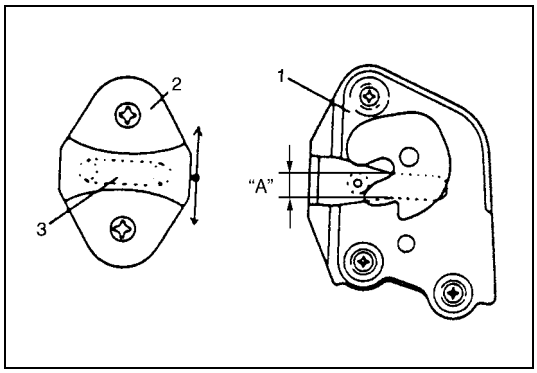

- Move door latch striker (2) up or down so its center aligns with the center of groove "A" on the door lock assembly (1) as shown.
  Striker should be moved vertically and placed level. Do not adjust door lock.

3. Shaft

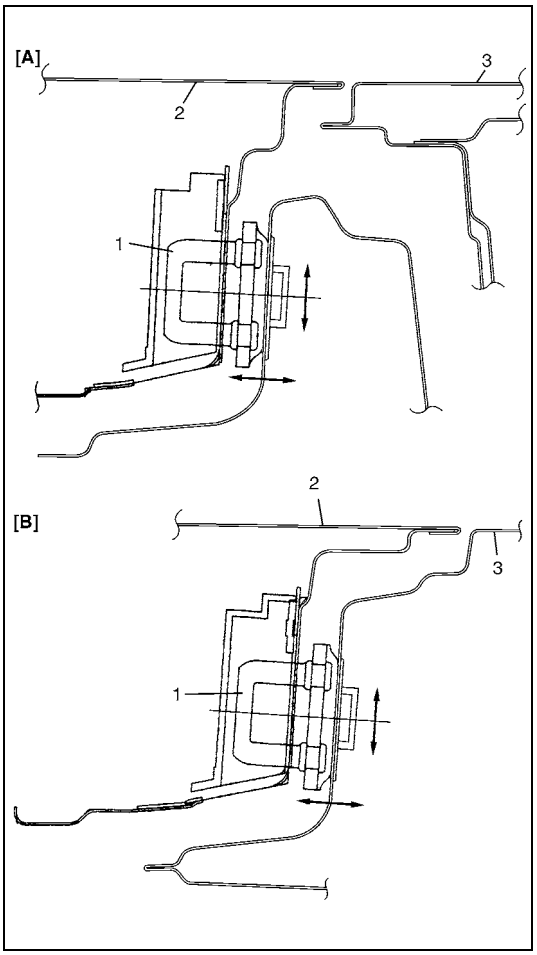

- Move door latch striker (1) sideways to adjust door outer panel surface (2) flush with rear door outer panel or body outer panel surface (3) as shown.
  In order to correctly obtain door lock operates, increase or decrease number of shims inserted between body and striker (1) to adjust it.

[A]: Front door
[B]: Rear door

Front Door Lock Assembly Inspection

- Check that door opens and closes smoothly and properly.
- Check that door stops in the secondary latched position properly (preventing door from opening freely) and that door closes completely in the fully latched position.
- Adjust door latch striker position if necessary.

Rear Door Lock Assembly Removal and Installation

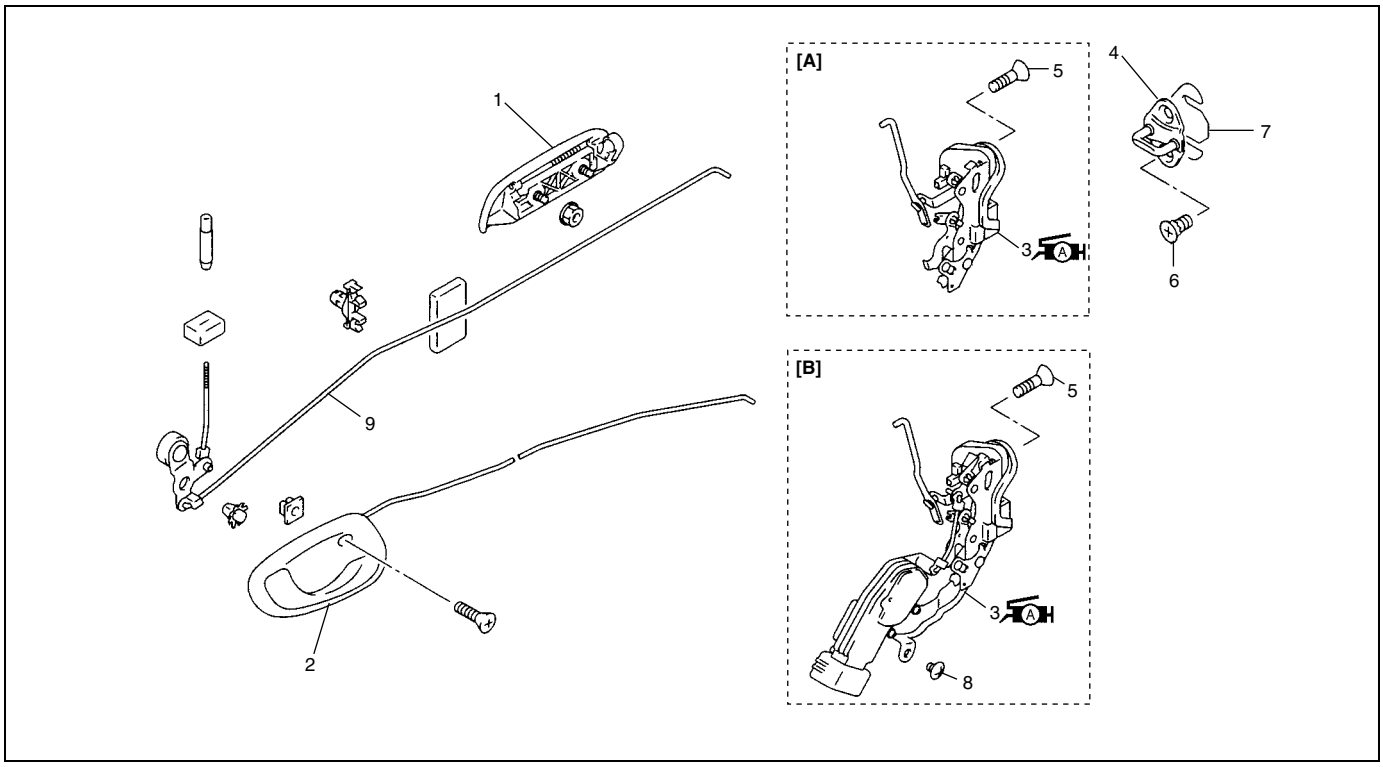

[A]: with out power door lock	2. Inside handle bezel	5. Door latch screw	8. Door latch actuator screw
[B]: with power door lock	3. Rear door latch assembly : Apply lithium grease 99000-25010 to sliding part	6. Door latch striker screw	9. Door lock control rod
1. Outside handle	4. Latch striker	7. Shim	

REMOVAL

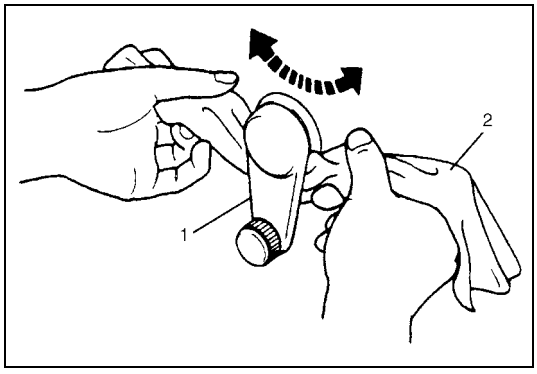

1) Remove window regulator handle (1).
   For its removal, push up snap off by using a cloth (2) as shown in figure.

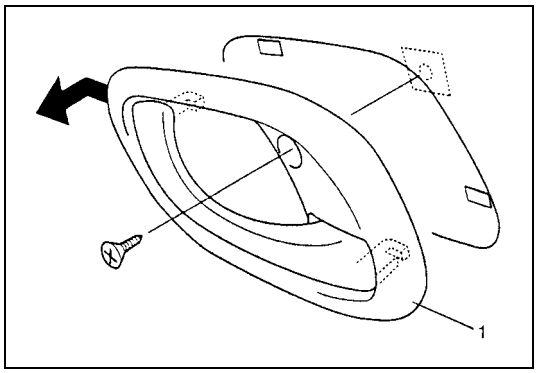

2) Remove inside handle bezel (1).

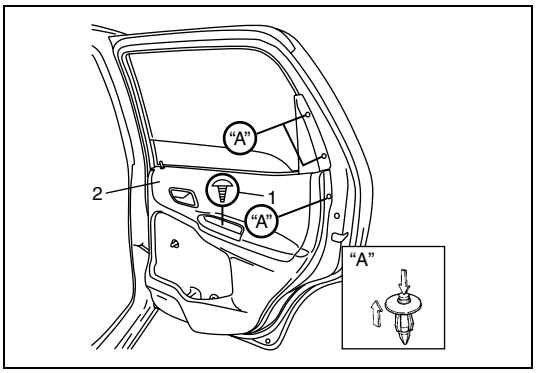

3) Loosen door trim mounting screw (1).
4) Remove rear door inner garnish (2).

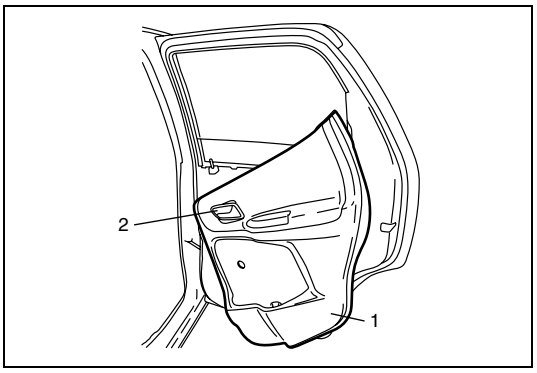

5) Remove door trim (1).
With inside handle bezel (2) tilted as shown in figure.

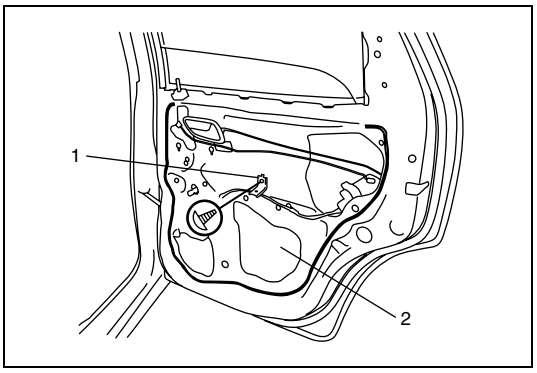

6) Remove door trim bracket (1).
7) Remove door sealing cover (2).

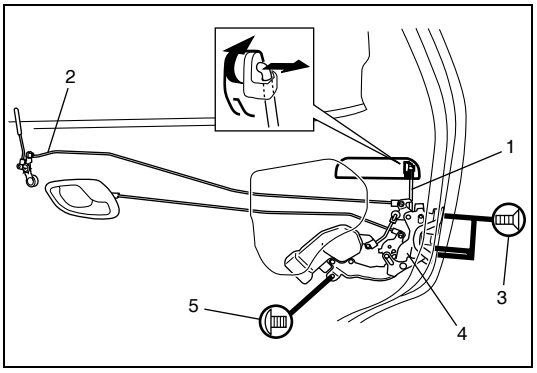

8) Disconnect door opening control rod (1) and door latch control rod (2).
9) Disconnect door lock motor lead wire at coupler (if equipped).
10) Loosen door latch mounting screw (3), door latch actuator screw (5) (if equipped with power door lock) and remove door lock assembly (4).

INSTALLATION

Reverse removal procedure to install rear door lock assembly referring to “Front Door Lock Assembly Removal and Installation” in this section.

Rear Door Lock Assembly Inspection

- Check that door opens and closes smoothly and properly.
- Check that door stops in the secondary latched position properly (preventing door from opening freely) and that door closes completely in the fully latched position.
- Adjust door latch striker position if necessary.

Rearend Door Lock Assembly Removal and Installation

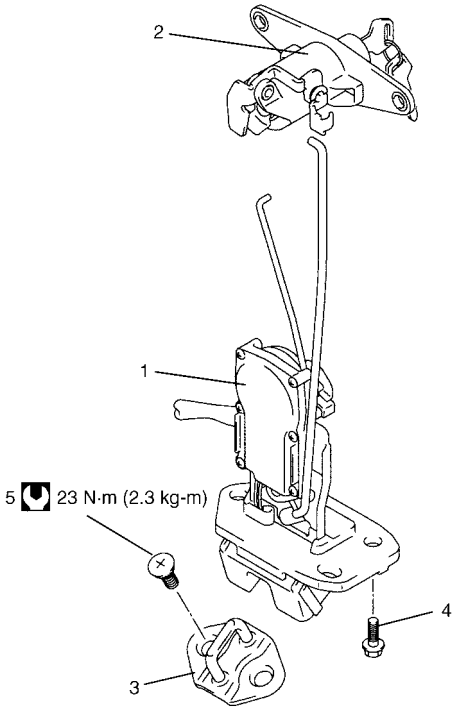

1. Rearend door latch assembly	3. Latch striker	5. Latch striker screw
2. Rearend door lock cylinder	4. Door latch screw	Tightening torque

REMOVAL

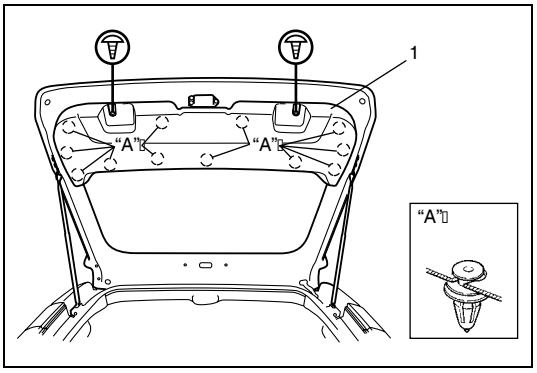

1) Remove door trim (1).

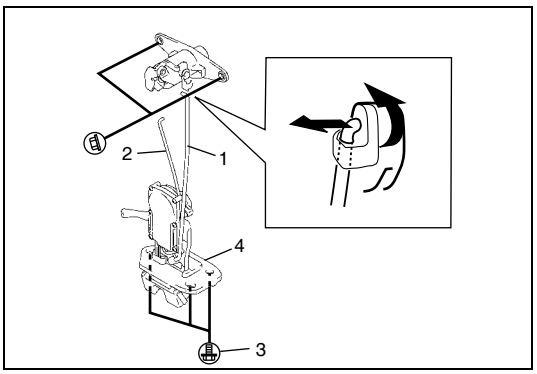

2) Disconnect door lock control rod (1) and control rod (2).
3) Disconnect door lock motor lead wire (if equipped).
4) Loosen door latch screw (3) and remove door latch assembly (4).

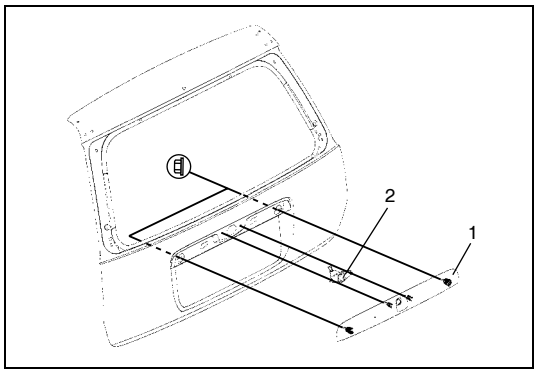

5) Remove back door licence garnish (1).
6) Remove back door lock cylinder (2).

INSTALLATION

Reverse removal procedure to install back door lock assembly noting the following instruction.

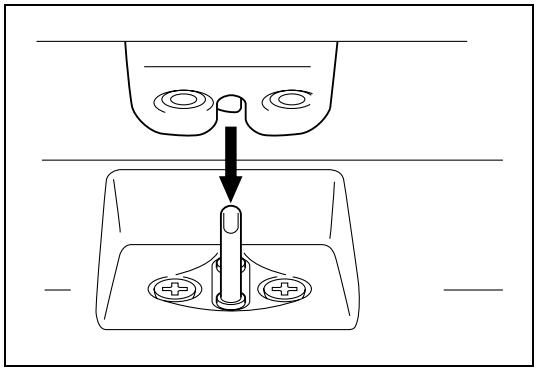

- Adjust door latch striker so that its center aligns with the center of groove in door latch base.

Rearend Door Lock Assembly Inspection

- Check that door opens and closes smoothly and properly.
- Check that door stops in the secondary latched position properly (preventing door from opening freely) and that door closes completely in the fully latched position.
- Adjust door latch striker position if necessary.

Key Coding

Key Usage and Identification

Key is used for ignition and door lock cylinder. Keys are cut on both edges to make them reversible.

Key identification is obtained from five character key code stamped on key code tag. Using this key code, key code cutting combination can be determined from a code list (available to owners of key cutting equipment from suppliers).

If key codes are not available from records or tags, key code can be obtained from the right hand door lock cylinder (if lock has not been replaced). Lock cylinders supplied by the factory as service parts are unmarked.

If original key is available, key code cutting combination can be determined by laying key.

Ignition switch lock cylinder removal and installation

Refer to “Steering Column Removal and Installation” in Section 3C.

ELECTRICAL DIAGNOSIS

For ignition switch electrical troubleshooting, refer to “Ignition Switch Removal and Installation” in Section 8.

Exterior and Interior Trim

Floor Carpet Removal and Installation

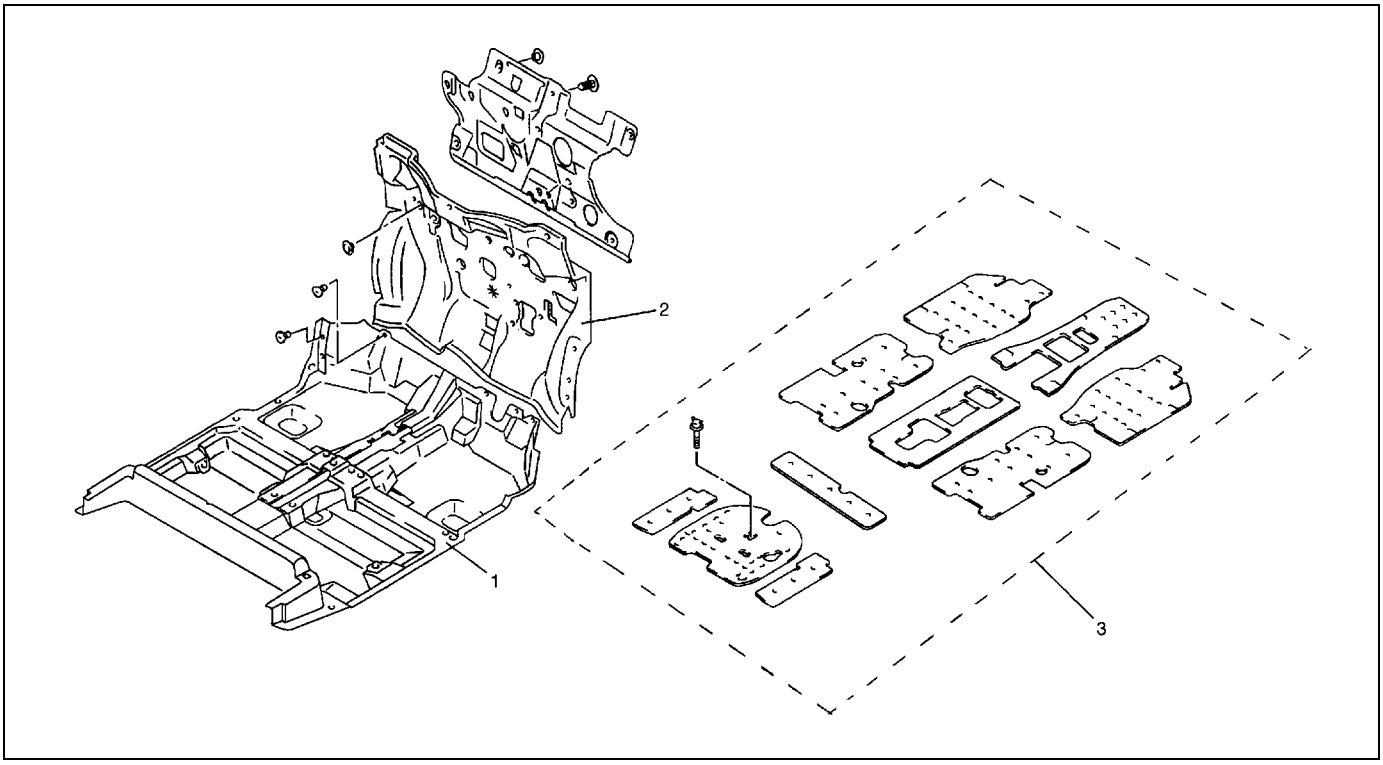

1.	Floor carpet
2.	Dash panel silencer
3.	Silencer seat

REMOVAL

1) Remove front seats and rear seat cushion.
2) Remove seat belt lower anchor bolt. Refer to “Front Seat Belt Removal and Installation” in Section 10.
3) Remove dash side trims, front side sill scuffs, center pillar inner lower trims, quarter inner trims and rear side sill scuffs.
4) Remove parking brake lever cover and console box.
5) Remove floor carpet.

INSTALLATION

Reverse removal sequence to install front floor carpet, noting the following instruction.

- For tightening torque of seat belt anchor bolt. Refer to “Front Seat Belt Removal and Installation” in Section 10.

Center Console Box Removal and Installation

When removing or installing center console box, refer to the figure.

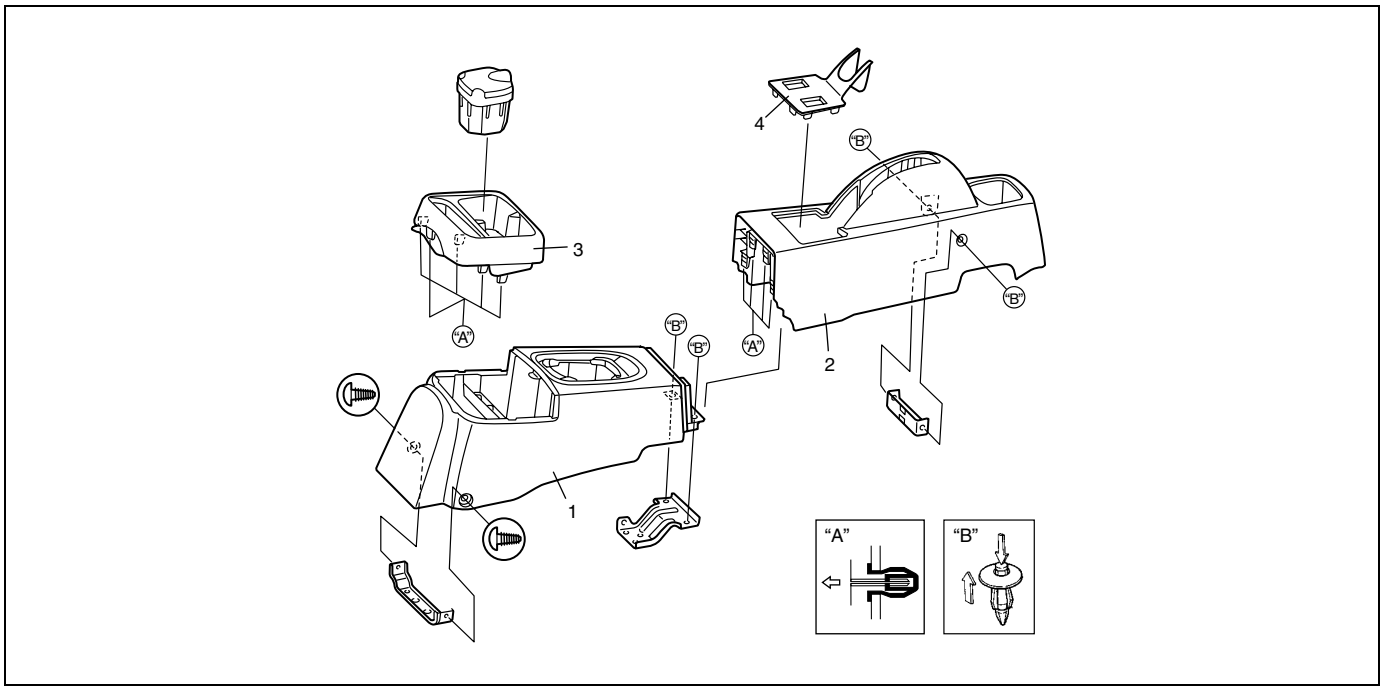

1.	Center console box front
2.	Center console box rear
3.	Center console garnish
4.	Center console cap

Head Lining Removal and Installation

REMOVAL

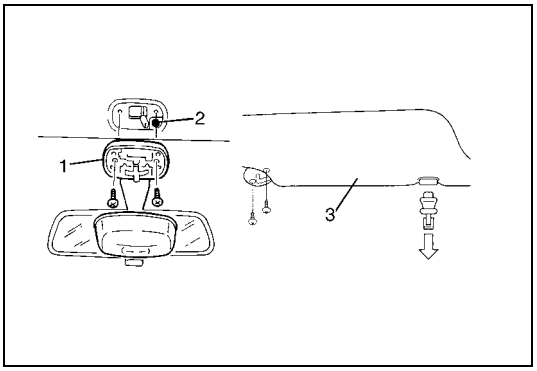

1) Remove interior light (1).
2) Remove head lining clip (2).
3) Remove sun visor (3).

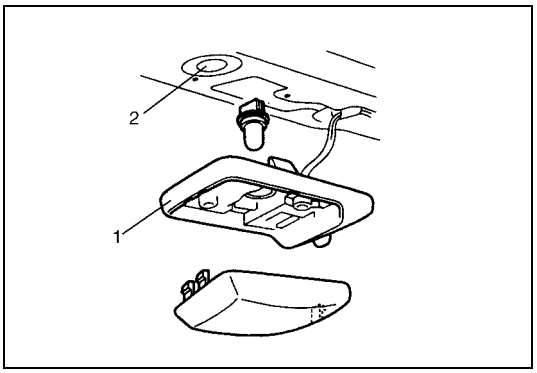

4) Remove luggage room light (1).
5) Remove head lining clip (2).

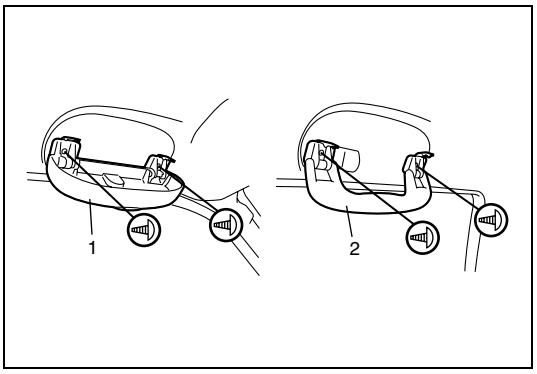

6) Remove assistant grip.

1.	Driver side
2.	Passenger side

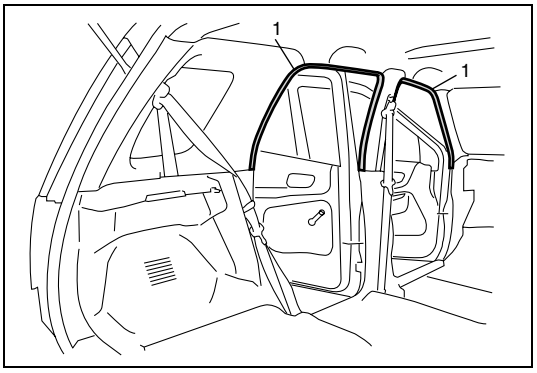

7) Remove door opening trim (1).

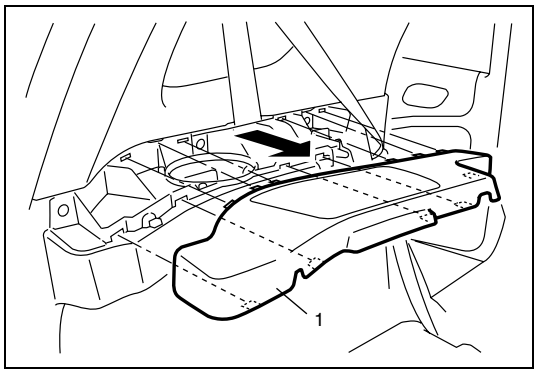

8) Remove rear speaker cover (1).

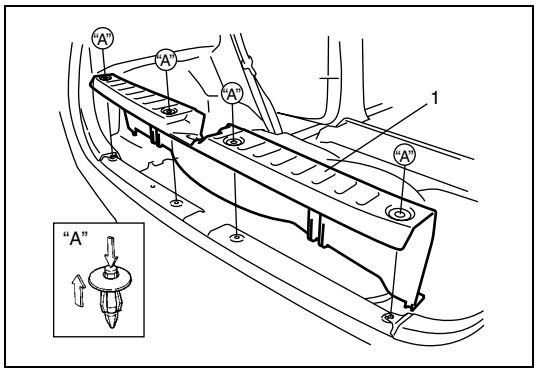

9) Remove tail end member trim (1).

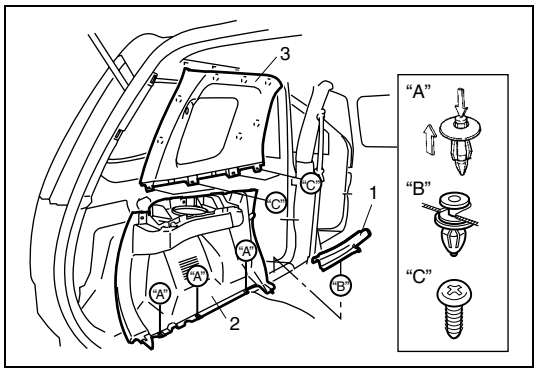

10) Remove side sill rear scuff (1).
11) Remove quarter inner trim (2).
12) Remove quarter window trim (3).

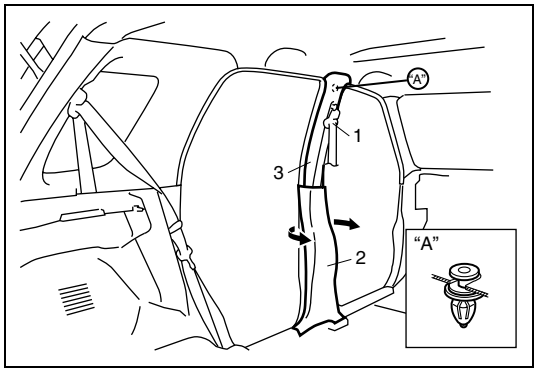

13) Remove front seat belt (1).
14) Remove center pillar lower trim (2).
15) Remove center pillar upper trim (3).

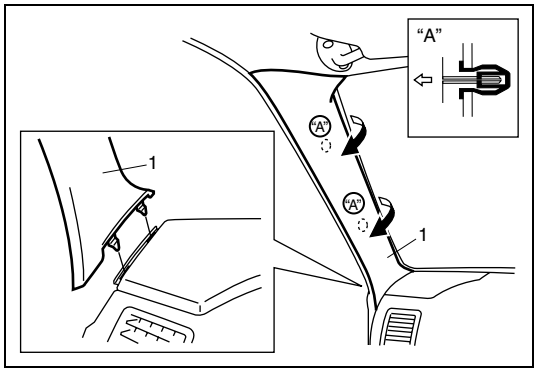

16) Remove front pillar inner trim (1).

INSTALLATION

Reverse removal procedure to install head lining noting the following instructions.

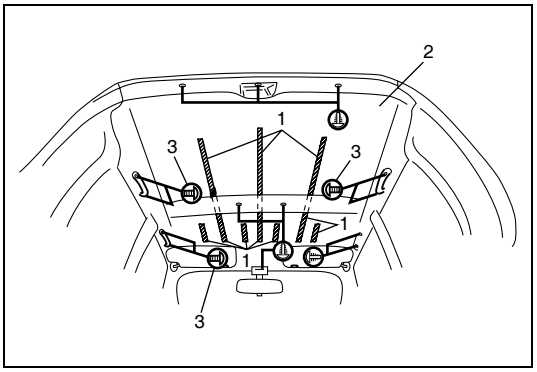

- Apply double-face tape (1) to head lining (2) as shown figure, and then install head lining (2).
- Tighten assistant grip screw (3) to specified torque.

Tightening torque
Assistant grip screw: 4 N·m (0.4 kg-m)

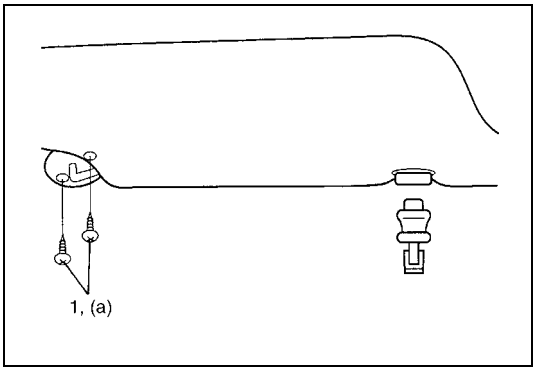

- Tighten sun visor screw (1) to specified torque.

Tightening torque
Sun visor screw (a): 4 N·m (0.4 kg-m)

Roof Molding Removal and Installation

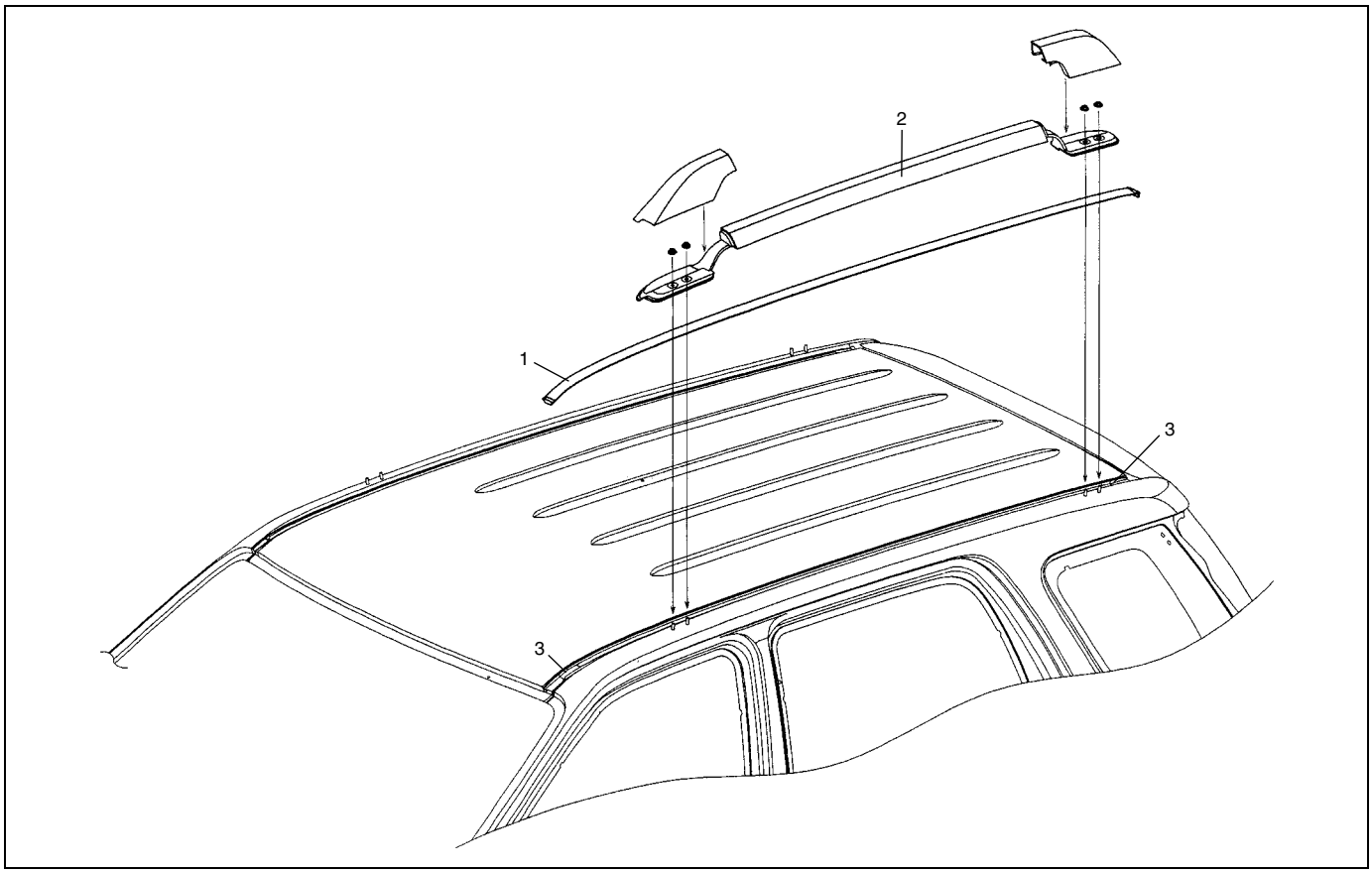

1. Roof molding	2. Roof rail	3. Adhesive

REMOVAL

1) Remove roof rail. Refer to “Roof Rail Removal and Installation (If Equipped)” in this section.
2) Remove roof molding.

INSTALLATION

Reverse removal procedure for installation.

Paint and Coatings

Anti-Corrosion Treatment

WARNING:
Standard shop practices, particularly eye protection, should be followed during the performance of the below-itemized operations to avoid personal injury.

As rust proof treatment, steel sheets are given corrosion resistance on the interior and/or exterior.
These corrosion resistance steel sheet materials are called one of two-side galvanized steel sheets.
It is for the sake of rust protection that these materials are selected and given a variety of treatments as described blow.

- Steel sheets are treated with cathodic electroprimer which is excellent in corrosion resistance.
- Rust proof wax coatings are applied to door and side sill insides where moisture is liable to stay.
- Vinyl coating is applied to body underside and wheel housing inside.
- Sealer is applied to door hem, engine compartment steel sheet-to-steel sheet joint, and the like portions to prevent water penetration and resulting in rust occurrence.

In panel replacement or collision damage repair, leaving the relevant area untreated as it is in any operation which does disturb the above-mentioned rust proof treatment will cause corrosion to that area. Therefore, it is the essential function of any repair operation to correctly recoat the related surfaces of the relevant area.
All the metal panels are coated with metal conditioners and primer coating during vehicle production. Following the repair and/or replacement parts installation, every accessible bare metal surface should be cleaned and coated with rust proof primer. Perform this operation prior to the application of sealer and rust proof wax coating.
Sealer is applied to the specific joints of a vehicle during production. The sealer is intended to prevent dust from entering the vehicle and serves also as an anticorrosion barrier. The sealer is applied to the door and hood hem areas and between panels. Correct and reseal the originally sealed joints if damaged. Reseal the attaching joints of a new replacement panel and reseal the hem area of a replacement door or hood.
Use a quality sealer to seal the flanged joints, overlap joints and seams. The sealer must have flexible characteristics and paint ability after it's applied to repair areas.
For the sealer to fill open joints, use caulking material. Select a sealer in conformance with the place and purpose of a specific use. Observe the manufacturer's label-stand instructions when using the sealer.
In many cases, repaired places require color painting. When this is required, follow the ordinary techniques specified for the finish preparation, color painting and undercoating build-up.
Rust proof wax, a penetrative compound, is applied to the metal-to-metal surfaces (door and side sill insides) where it is difficult to use ordinary undercoating material for coating. Therefore, when selecting the rust proof wax, it may be the penetrative type.
During the undercoating (vinyl coating) application, care should be taken that sealer is not applied to the engine-related parts and shock absorber mounting or rotating parts. Following the under coating, make sure that body drain holes are kept open.
The sequence of the application steps of the anti-corrosion materials are as follows:

1) Clean and prepare the metal surface.
2) Apply primer.
3) Apply sealer (all joints sealed originally).
4) Apply color in areas where color is required such as hem flanges, exposed joints and under body components.
5) Apply anticorrosion compound (penetrative wax).
6) Apply undercoating (rust proof material).

Sealant Application Areas

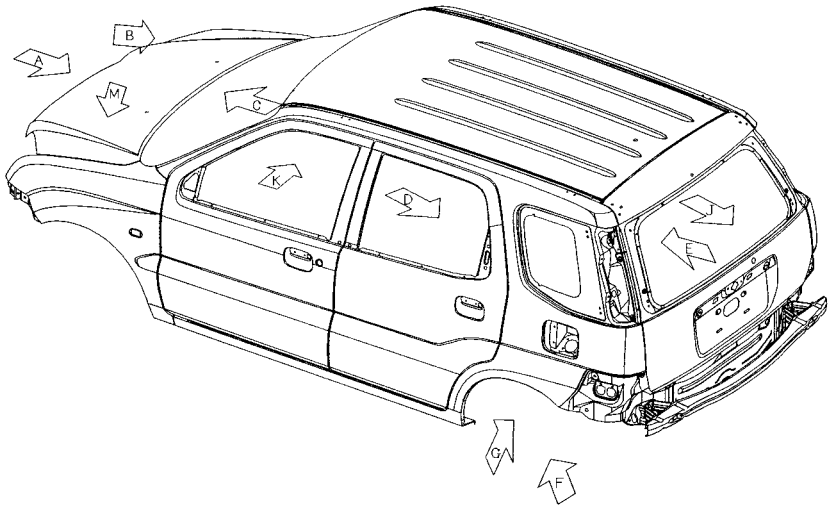

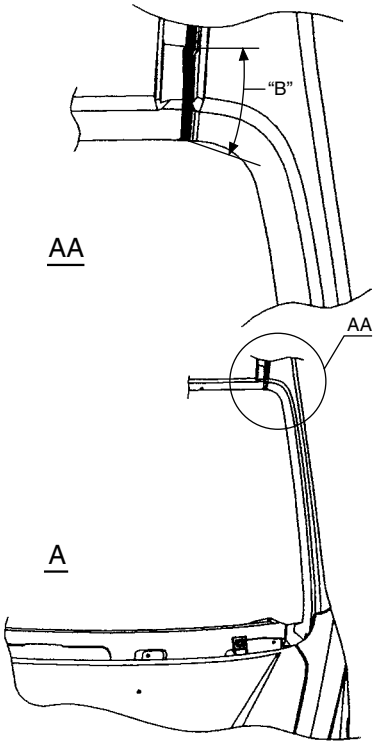

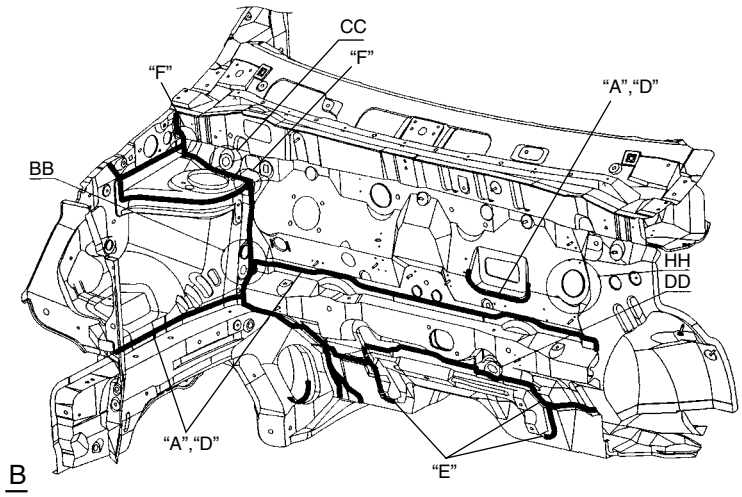

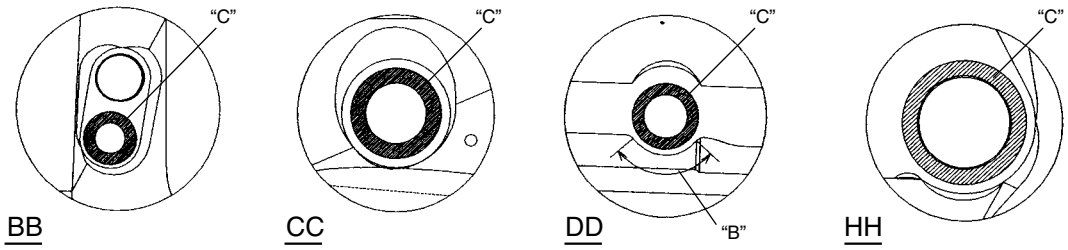

"A": Apply sealant	"C": Do not apply sealant	"E": Never fill up drain holes with sealant
"B": Wipe off excess sealant after application	"D": Smooth out sealant with a brush	"F": Fill gap/hole with sealant

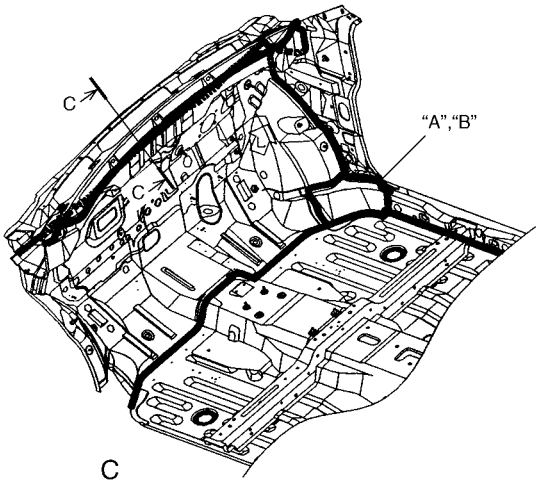

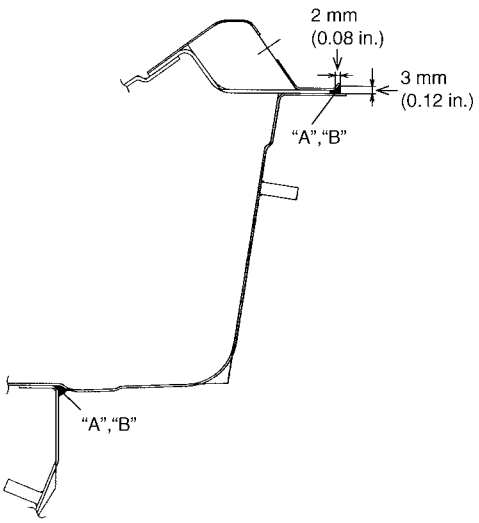

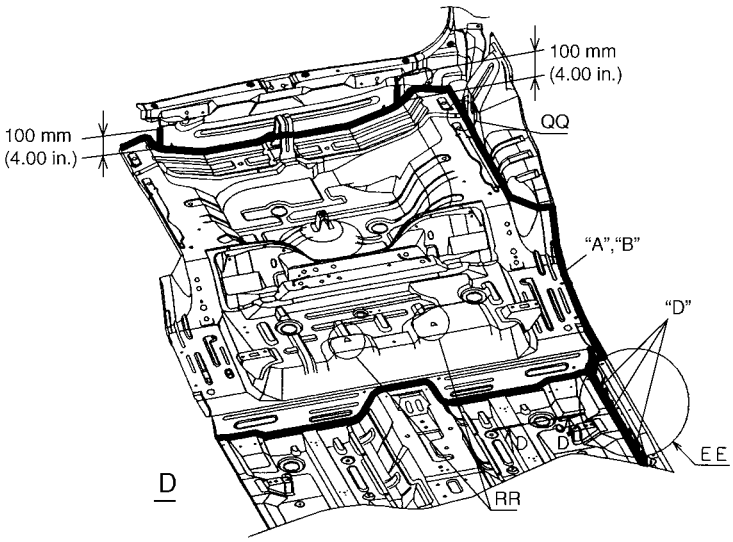

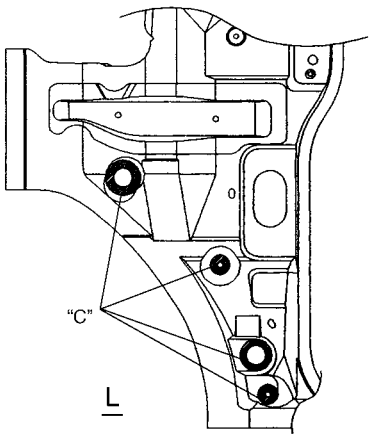

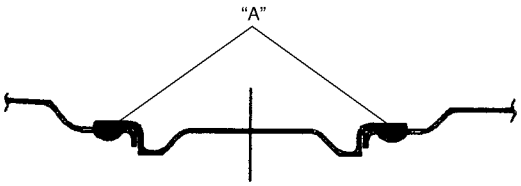

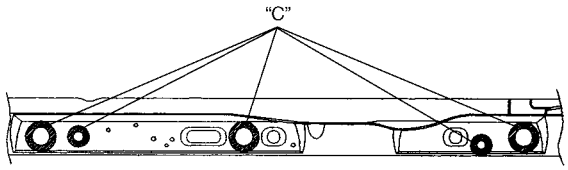

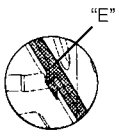

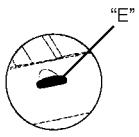

"A": Apply sealant	"C": Do not apply sealant	"E": Fill gap/hole with sealant
"B": Smooth out sealant with a brush	"D": Never fill up drain holes with sealant	

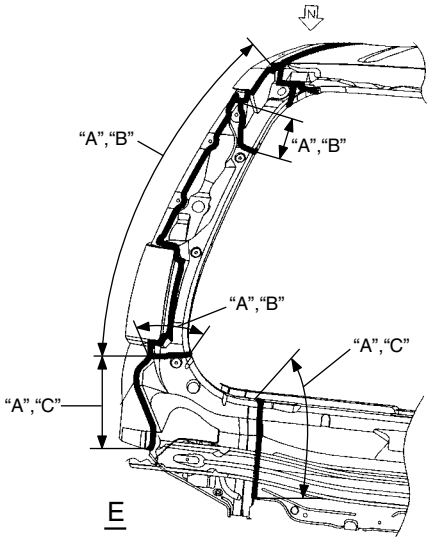

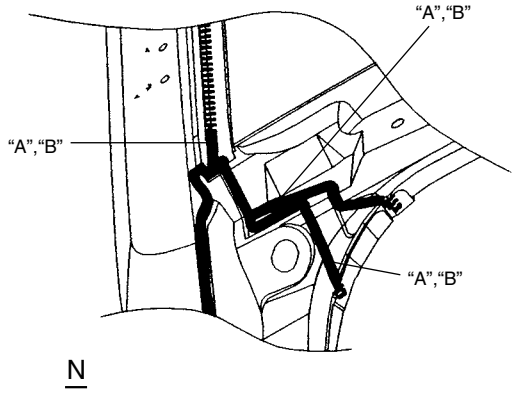

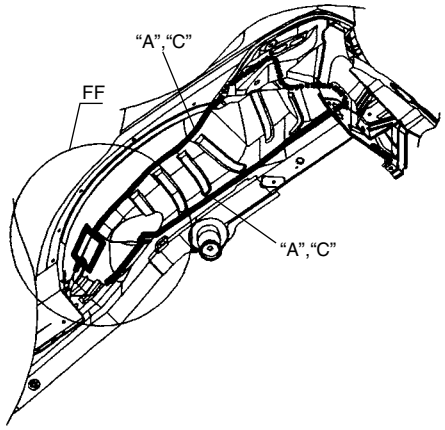

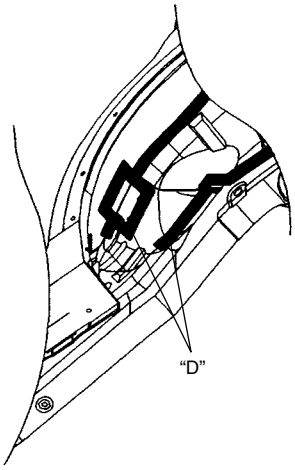

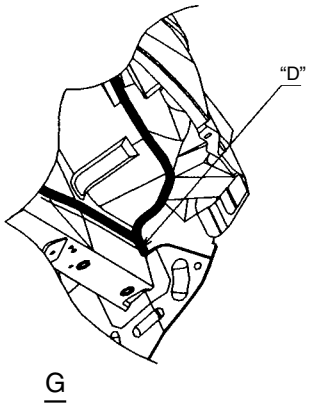

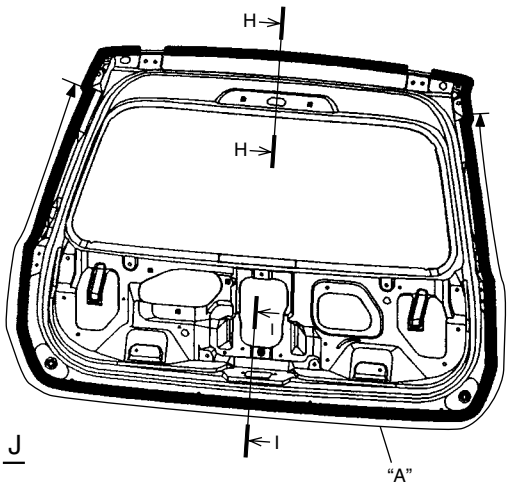

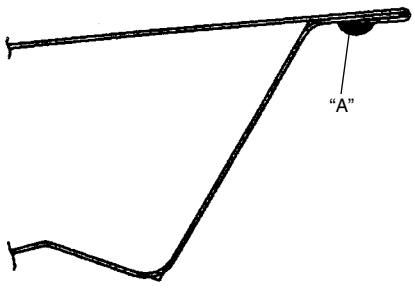

"A": Apply sealant	"C": Smooth out sealant with a brush
"B": Wipe off excess sealant after application	"D": Fill gap/hole with sealant

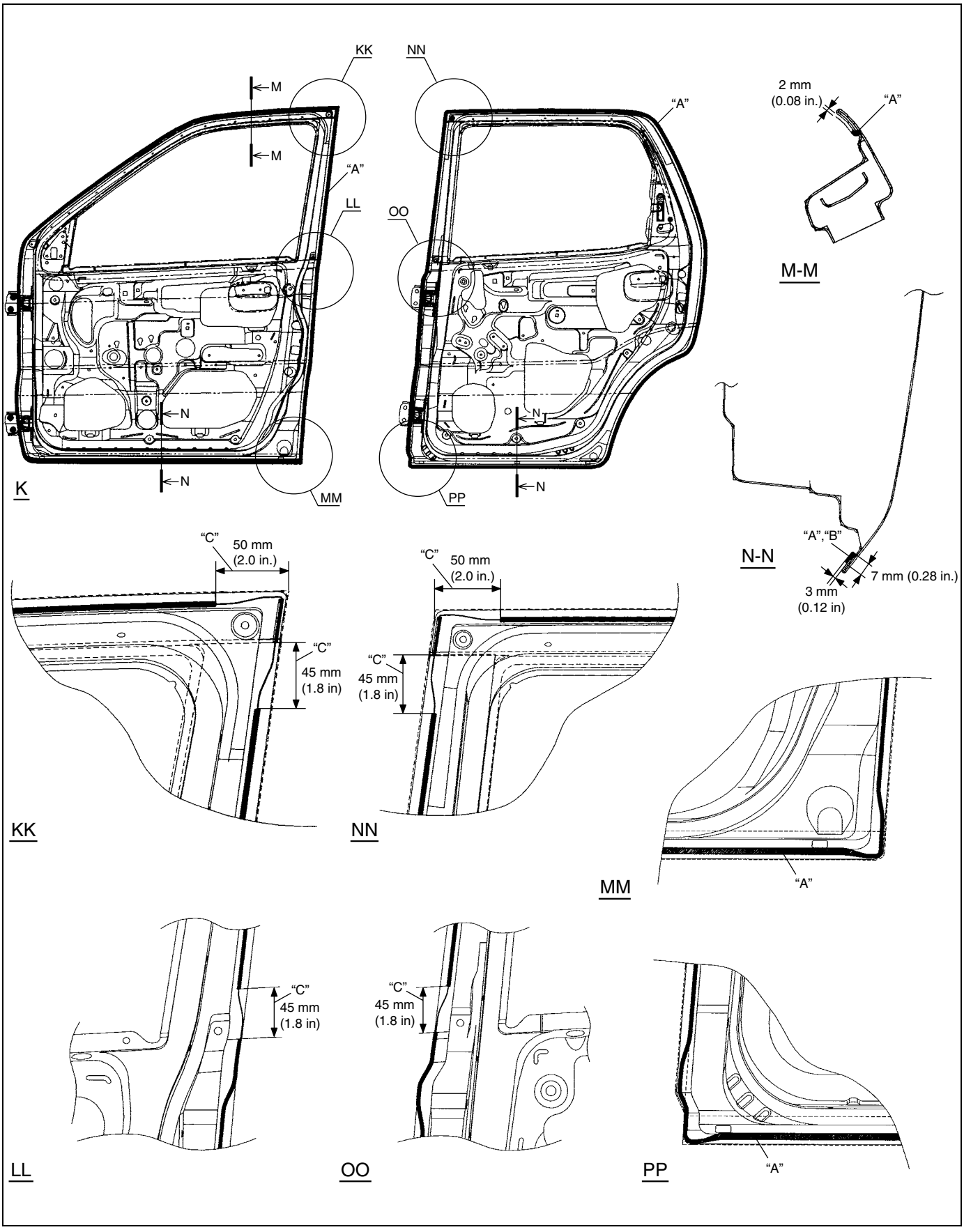

"A": Apply sealant	"C": Wipe off excess sealant after application
"B": Never fill up drain holes with sealant	

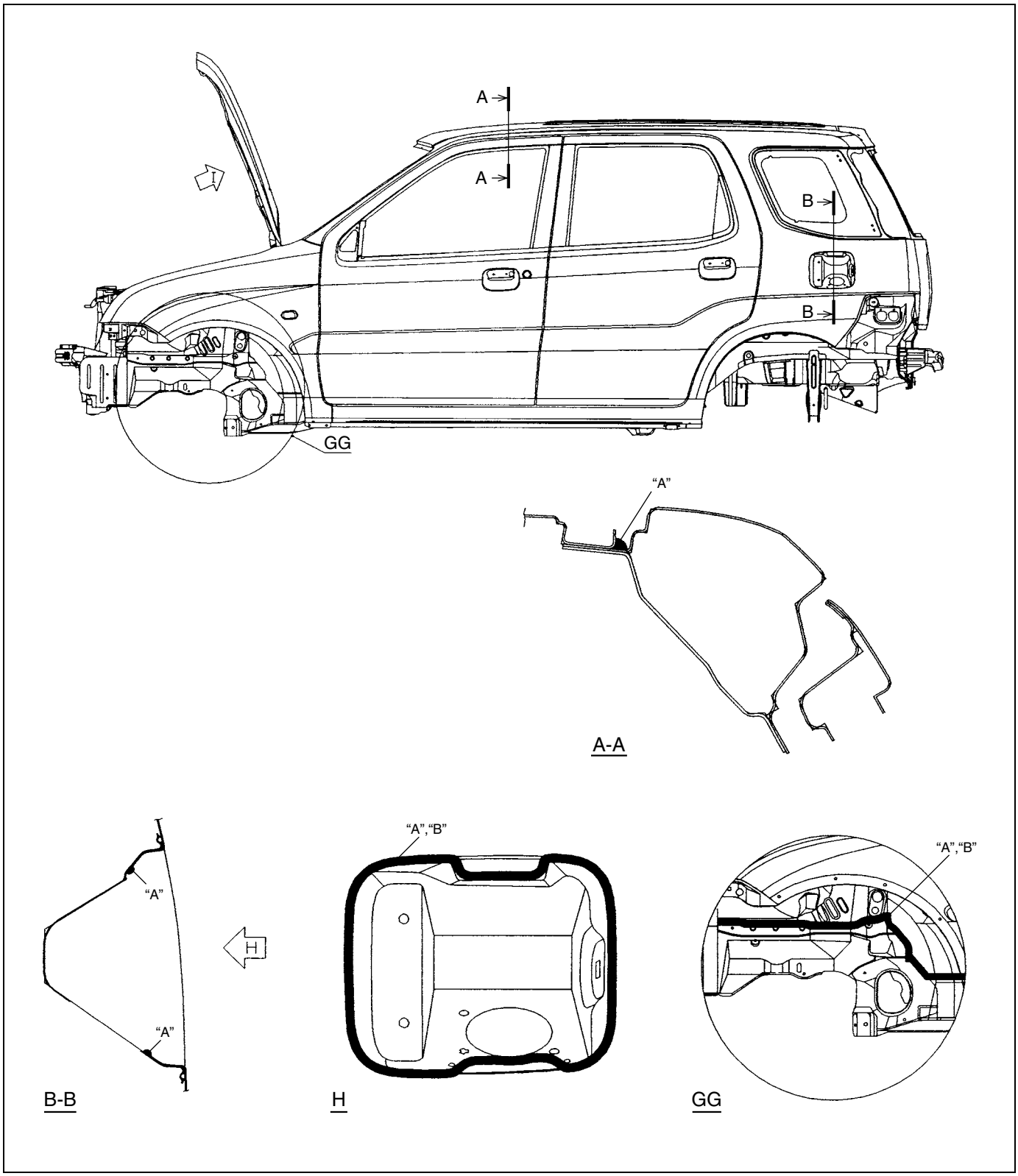

"A":	Apply sealant
"B":	Smooth out sealant with a brush

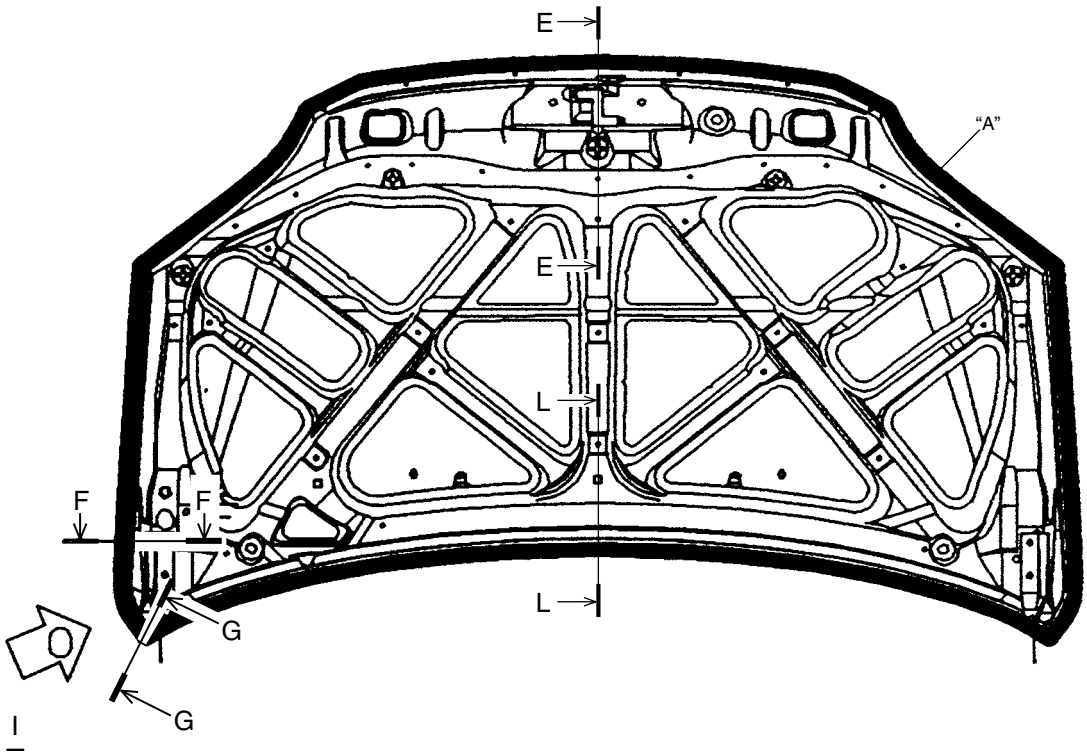

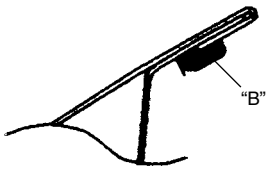

E-E

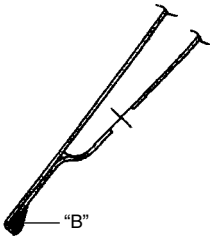

G-G

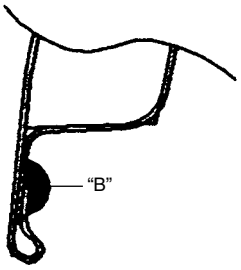

L-L

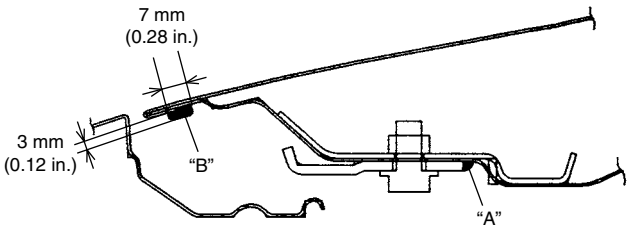

F-F

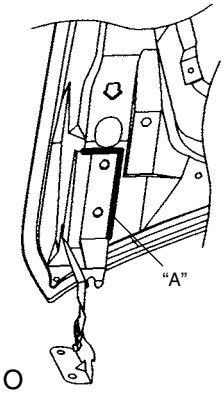

O

"A":	Apply sealant
"B":	Apply sealant so that top of flange covered up certainly

Under Coating Application Areas

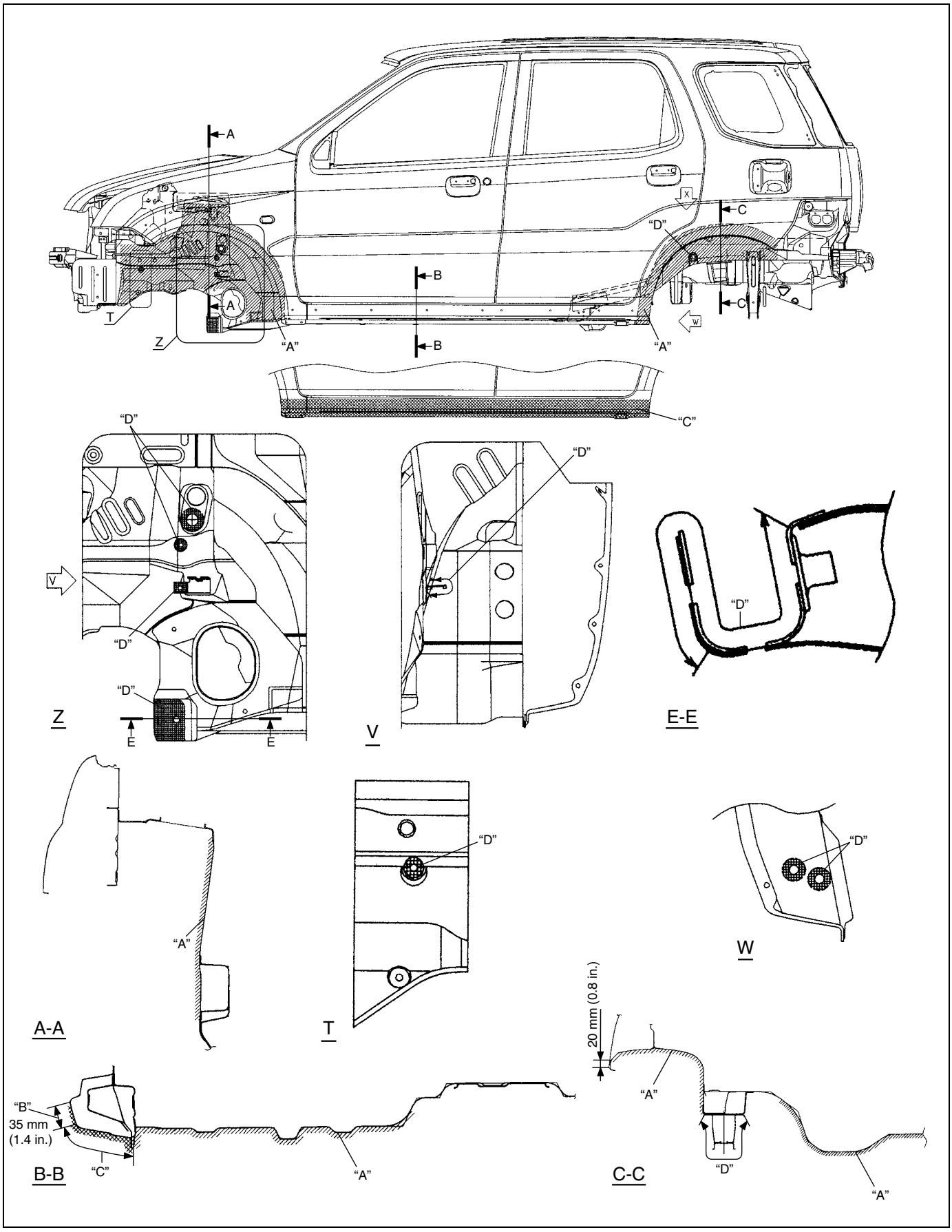

"A": Apply undercoating (PCV, 400 µm or more)	"C": Apply anti-chip coat (300 µm or more)
"B": Apply anti-chip coat (100 µm or more)	"D": Do not apply undercoating

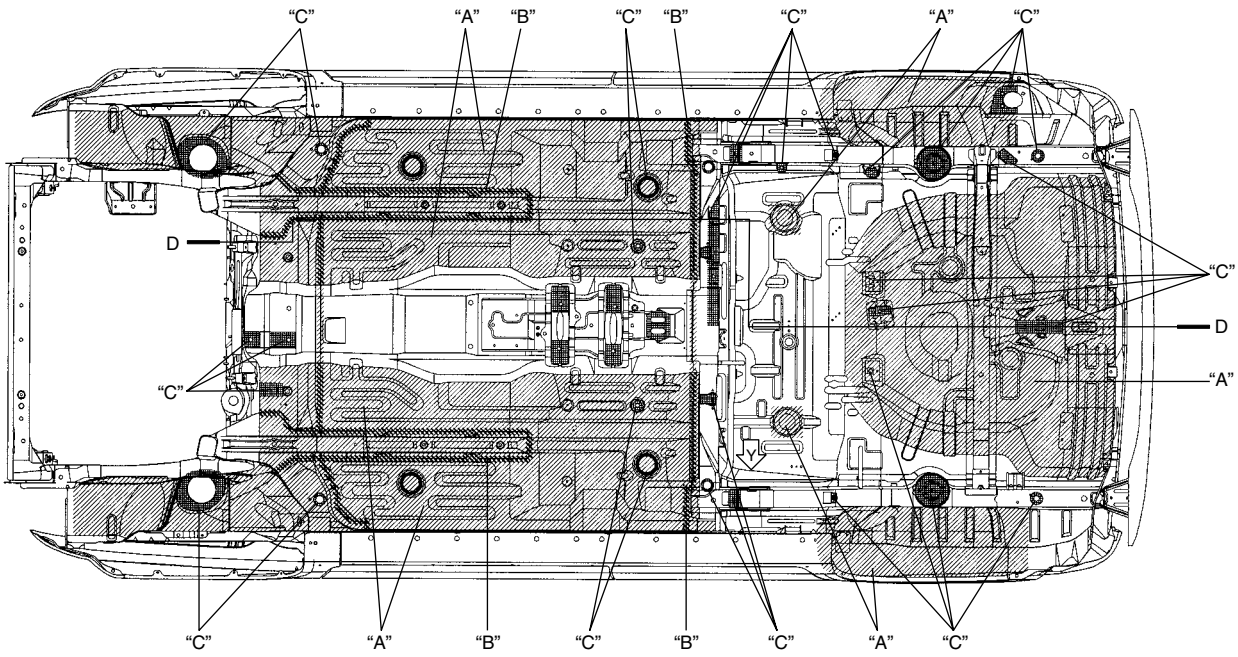

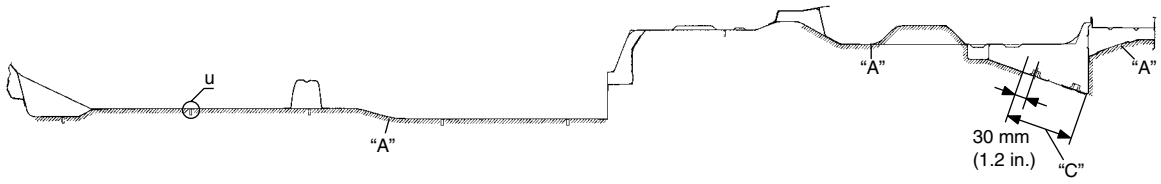

D-D

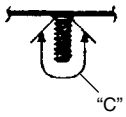

U

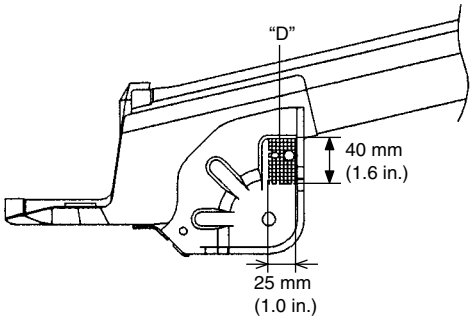

Y

"A": Apply undercoating (PCV, 400 µm or more)
"B": Apply undercoating (PCV, 600 µm or more)
"C": Do not apply undercoating

Anti-Corrosion Compound Application Area

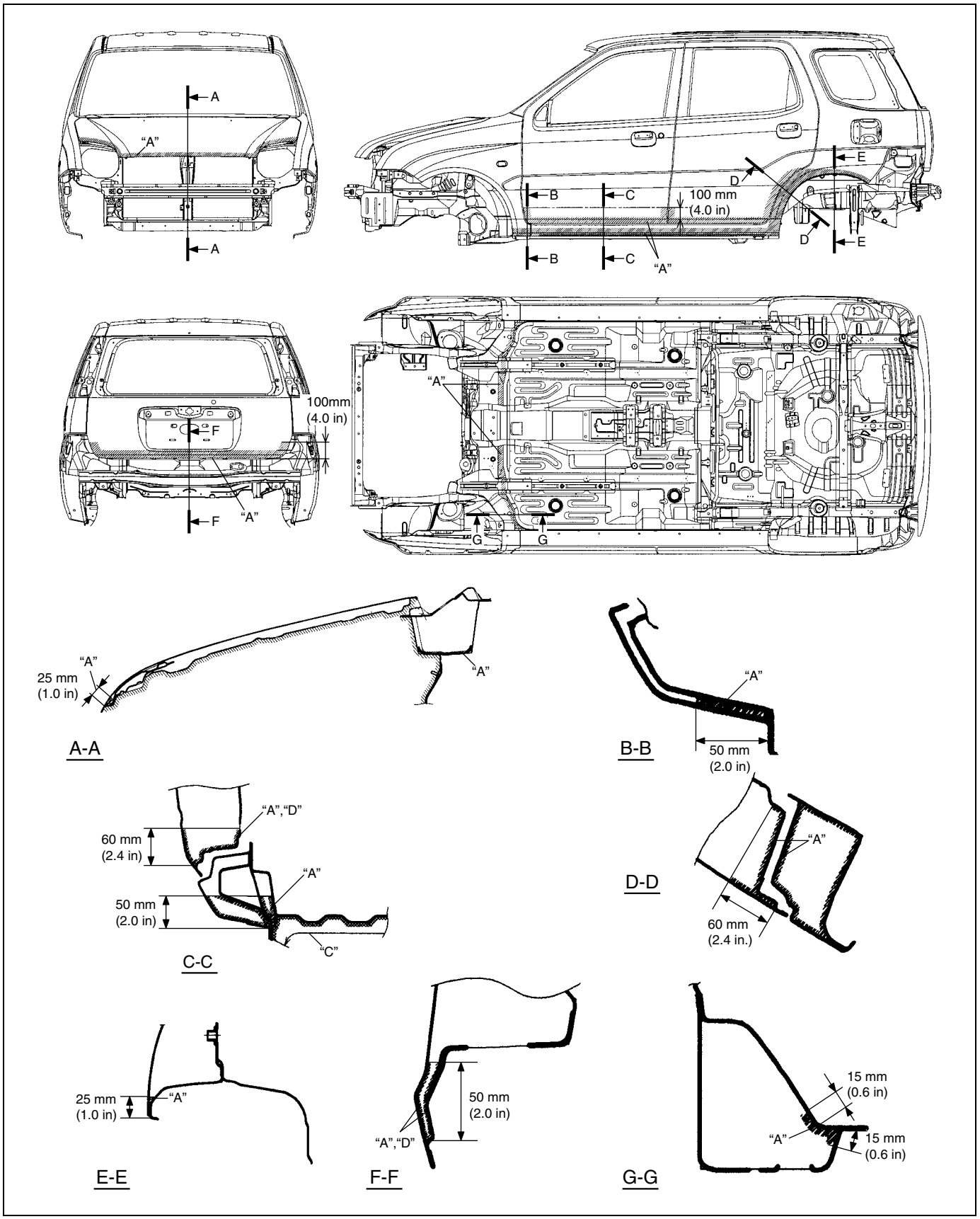

"A": Apply rust proof wax (hot wax 50 µm or more)	"C": Apply rust proof wax (high viscosity wax 50 µm or more)
"B": Apply rust proof wax (low viscosity wax 10 µm or more)	"D": Never fill up drain holes with rust proof wax

Plastic Parts Finishing

Paintable plastic parts are ABS plastic parts.

PAINTING

Rigid or hard ABS plastic needs no primer coating.
General acrylic lacquers can be painted properly over hard ABS plastic in terms of adherence.

1) Use cleaning solvent for paint finish to wash each part.
2) Apply conventional acrylic color lacquer to part surface.
3) Follow lacquer directions for required drying time. (Proper drying temperature range is 60 – 70 °C (140 – 158 °F)).

REFERENCE

Plastic parts employ not only ABS (Acrylonitrile Butadiene Styrene) plastic but also polypropylene, vinyl, or the like plastic. Burning test method to identify ABS plastic is described below.

1) Use a sharp blade to cut off a plastic sliver from the part at its hidden backside.
2) Hold sliver with pincers and set it on fire.
3) Carefully observe condition of the burning plastic.
4) ABS plastic must raise readily distinguishable back smoke while burning with its residue suspended in air temporarily.
5) Polypropylene must raise no readily distinguishable smoke while burning.

Required Service Material

Material	Recommended product	Use
Lithium grease	SUZUKI SUPER GREASE A (99000-25010)	• Window regulator • Door hinge
Sealant	SUZUKI BOND No. 1215 (99000-31110)	• Hood hinge • Door hinge

SECTION 10

RESTRAINT SYSTEM

WARNING:

For vehicles equipped with Supplemental Restraint (Air Bag) System with seat belt pretensioner:

- **Service on or around the air bag system components or wiring must be performed only by an authorized SUZUKI dealer. Please observe all WARNINGS and "Service Precautions" under "On-Vehicle Service" in Section 10B before performing service on or around the air bag system components or wiring. Failure to follow WARNINGS could result in unintentional activation of the system or could render the system inoperative. Either of these two conditions may result in severe injury.**
- **The procedures in this section must be followed in the order listed to disable the air bag system temporarily and prevent false diagnostic trouble codes from setting. Failure to follow procedures could result in possible activation of the air bag system, personal injury or otherwise unneeded air bag system repairs.**

CAUTION:

When fasteners are removed, always reinstall them at the same location from which they were removed. If a fastener needs to be replaced, use the correct part number fastener for that application. If the correct part number fastener is not available, a fastener of equal size and strength (or stronger) may be used. Fasteners that are not reused, and those requiring thread-locking compound, will be called out. The correct torque value must be used when installing fasteners that require it. If the above procedures are not followed, parts or system damage could result.

CONTENTS

General Description 10-2
Seat Belt Construction 10-2
Seat Belt Pretensioner 10-3
Diagnosis 10-3
Inspection and Repair Required After Accident 10-3
On-Vehicle Service 10-4
Service Precautions 10-4
Service and diagnosis 10-4
Disabling air bag system 10-4
Enabling air bag system 10-4
Handling and storage 10-4
Disposal 10-4
Front Seat Belt Components 10-5
Front seat belt 10-5
Front Seat Belt Removal and Installation 10-6
Front Seat Belt Inspection 10-8
Rear Seat Belt Components 10-9
Rear Seat Belt Removal and Installation 10-10
Rear Seat Belt Inspection 10-10
Tightening Torque Specification 10-10

General Description

Seat Belt Construction

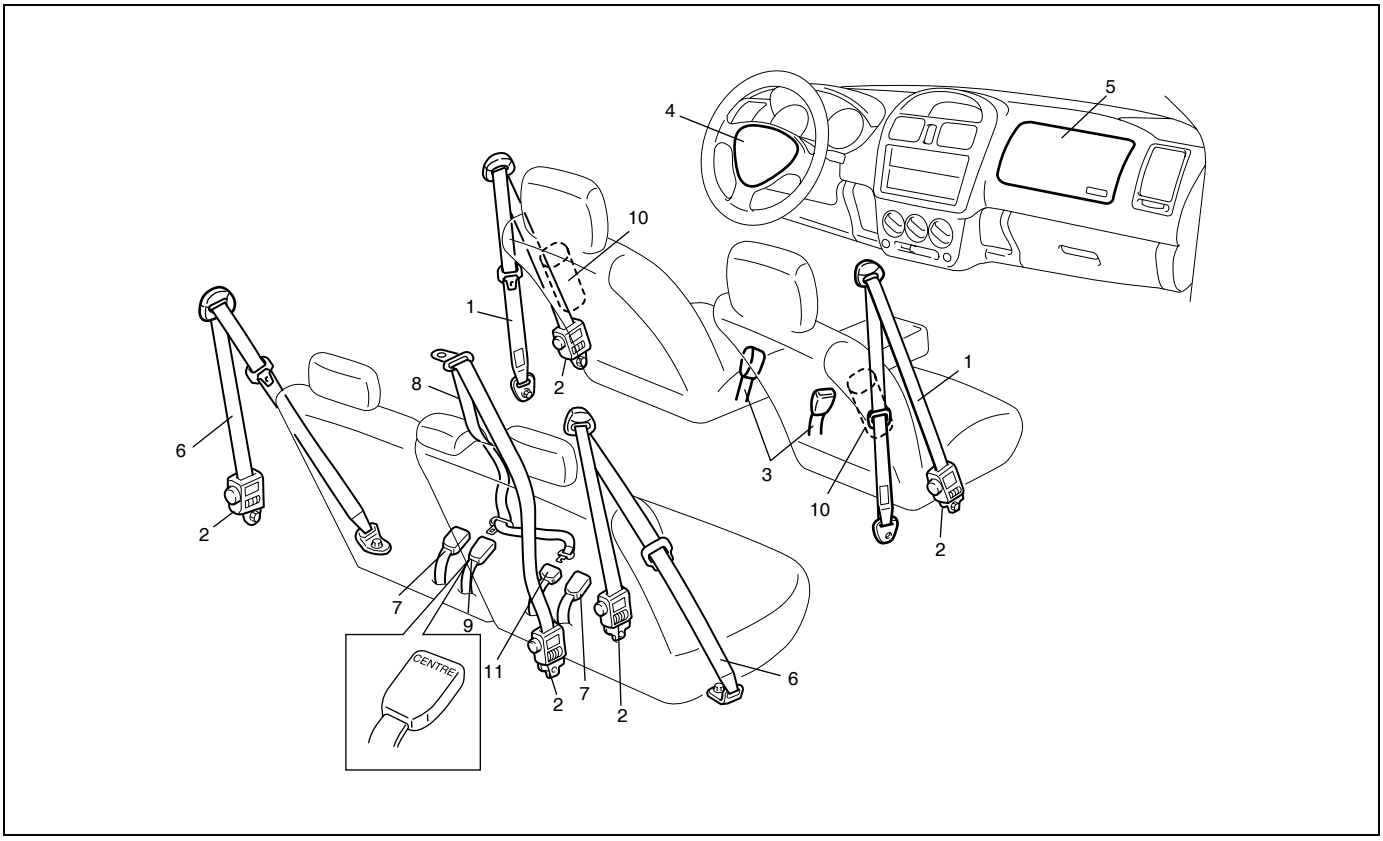

1. Front seat belt	5. Passenger air bag (inflator) module	9. Buckle for rear center seat belt
2. Retractor assembly	6. Rear seat belt	10. Side air bag (inflator) module (if equipped)
3. Buckle for front seat belt	7. Buckle for rear seat belt	11. Connector for rear center seat belt
4. Driver air bag (inflator) module	8. Rear center seat belt	

Seat Belt with ELR

The seat belt with emergency locking retractor (ELR) is designed so that it locks immediately (to prevent the webbing from being pulled out of the retractor any further) when any of the following items is detected as exceeding each set value;

- Speed at which the webbing is pulled out of the retractor.
- Acceleration or deceleration of the vehicle speed.
- Inclination.

Seat Belt with A-ELR

The automatic and emergency locking retractor (A-ELR) works as an Emergency Locking Retractor (ELR) till its webbing is pulled all the way out and then on as an Automatic Locking Retractor (ALR) till it is retracted fully.
ALR: Automatically locks when the webbing is pulled out from the retractor and allowed to retract even a little. Then the webbing can not be pulled out any further, unless it is wound all the way back into the retractor, which releases the lock and allows the webbing to be pulled out.

Seat Belt wit ELR and Pretensioner

The seat belt with ELR and a pretensioner has a pretensioner mechanism which operates in linkage with the air bag in addition to the above described ELR. The pretensioner takes up the sag of the seat belt in occurrence of a front collision with an impact larger than a certain set value, thereby enhancing restraint performance.

There are three types of restraint system for this vehicle.

	Type 2	Type 3
Front seat belt	• Seat belt with ELR	• Seat belt with ELR
Rear seat belt	• Seat belt with A-ELR • Center seat belt with ELR	• Seat belt with A-ELR • Center seat belt with ELR
Supplemental restraint system	• Driver and front passenger air bags	• Driver and front passenger air bags
	• Driver and front passenger pretensioners	• Driver and front passenger pretensioners • Driver and front passenger side air bags

Seat Belt Pretensioner

The pretensioner is incorporated in retractor assembly and controlled by SDM as one of air bag system components. It will be activated at the same time as the air bag when an impact at the front of vehicle exceeds the specified value.
When servicing seat belt (retractor assembly) with pretensioner, be sure to observe all WARNINGS and CAUTIONS in this section and “Service Precautions” in Section 10B

CAUTION:
Do not reuse the seat belt pretensioner (retractor assembly) that has operated but replace it with a new one as an assembly. For checking procedure of its operation, refer to “Service Precautions” in Section 10B.

Diagnosis

For diagnosis of air bag system (including in seat belt pretensioner), refer to “Air Bag Diagnostic System Check” in Section 10B.

Inspection and Repair Required After Accident

After an accident, whether the seat belt pretensioner has been activated or not, be sure to perform checks and repairs described on “Repairs and Inspections Required after an Accident” in Section 10B.

On-Vehicle Service

Service Precautions

Service and diagnosis

WARNING:
If replacing seat belt is necessary, replace buckle and ELR (or webbing) together as a set. This is for the reason of ensuring locking of tongue plate with buckle.
If these parts are replaced individually, such a locking condition may become unreliable. For this reason, SUZUKI will supply only the spare buckle and ELR (or webbing) in a set part.

Before servicing or replacing seat belts, refer to the following precautionary items.

- Seat belts should be normal relative to strap retractor and buckle portions.
- Keep sharp edges and damaging objects away from belts.
- Avoid bending or damaging any portion of belt buckle or latch plate.
- Do not bleach or dye belt webbing. (Use only mild soap and lukewarm water to clean it.)
- When installing a seat belt anchor bolt, it should be tightened by hand at first to prevent cross-threading and then to specified torque.
- Do not attempt any repairs on retractor mechanisms or retractor covers. Replace defective assemblies with new replacement parts.
- Keep belts dry and clean at all times.
- If there exist any parts in question, replace such parts.
- Replace belts whose webbing is cut or otherwise damaged.
- Do not put anything into trim panel opening which seat belt webbing passes through.

For Seat Belt with Pretensioner

Refer to “Service and diagnosis” under “Service Precautions” in Section 10B.

WARNING:
When performing service on or around air bag system components or air bag system wiring, disable the air bag system. Refer to “Disabling air bag system” in Section 10B.
Failure to follow procedures could result in possible air bag activation, personal injury or unneeded air bag system repairs.

Disabling air bag system

Refer to “Disabling air bag system” in Section 10B.

Enabling air bag system

Refer to “Enabling air bag system” in Section 10B.

Handling and storage

Refer to “Handling and storage” in Section 10B.

Disposal

Refer to “Disposal” under “Air Bag (Inflator) Module and Seat Belt Pretensioner Disposal” in Section 10B.

Front Seat Belt Components

Front seat belt

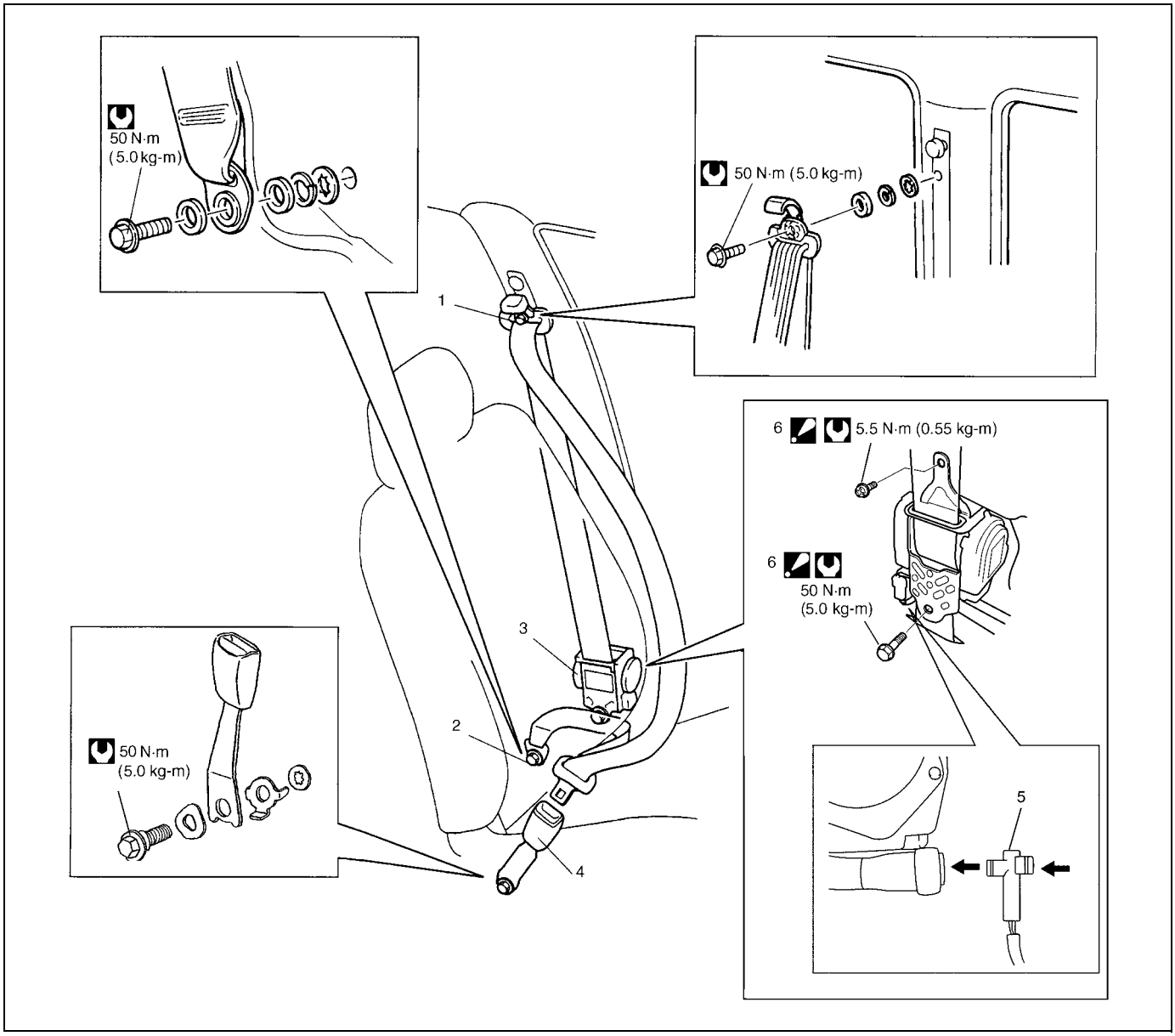

1. Upper anchor	4. Buckle	Tightening torque
2. Lower anchor	5. Yellow connector (for seat belt pretensioner)	
3. Retractor assembly	6. Retractor assembly mounting bolt : After tightening lower bolt, tighten upper screw	

Front Seat Belt Removal and Installation

REMOVAL

WARNING:

- **Never attempt to disassemble or repair the seat belt pretensioner (retractor assembly). If any abnormality is found, be sure to replace it with new one as an assembly.**
- **Be sure to read "Service Precautions" in Section 10B, before starting to work and observe every precaution during work. Neglecting them may result in personal injury or unactivation of the seat belt pretensioner when necessary.**

1) Disconnect negative battery cable at battery.
2) Disable air bag system. Refer to "Disabling air bag system" in Section 10B.
3) Remove center pillar lower trim.
4) Disconnect Yellow connector for seat belt pretensioner.
   a) Release locking of lock pin.
   b) After unlocked, disconnect connector from seat belt pretensioner.
5) Remove front seat belts from the vehicle.

INSTALLATION

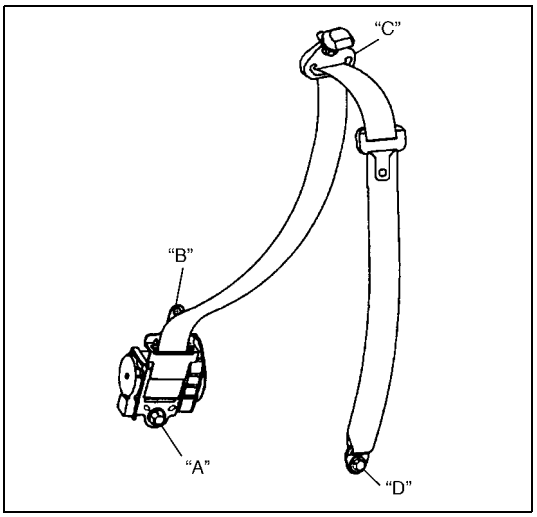

Install in reverse order of removal, noting the following.

- Seat belt anchor bolts should have an unified fine thread (7/16-20 UNF). Under no circumstances should any different sized or metric screw threads be used.
- Be sure to tighten bolts and screw in order ("A" – "D") as shown.
- Tighten bolts and screw to specified torque referring to "Front Seat Belt Components" in this section.
- Confirm that seat belt is not twisted when installing seat belt.

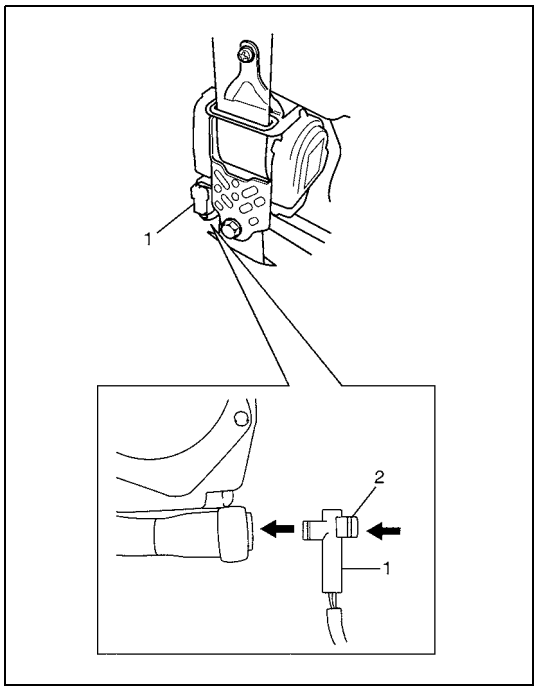

- Connect Yellow connector (1) to seat belt pretensioner securely.

a) Connect connector

b) Lock connector with lock pin (2)

- Enable air bag system. Refer to “Enabling air bag system” in Section 10B.

Front Seat Belt Inspection

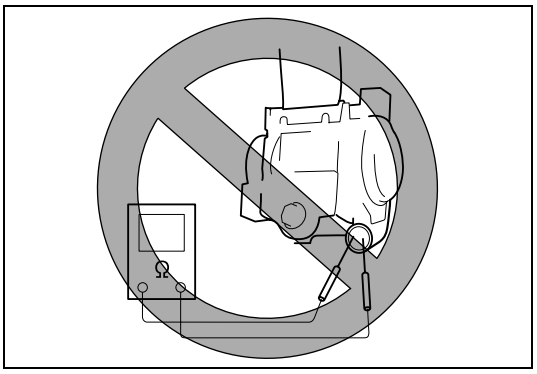

WARNING:

Never measure resistance of pretensioner or disassemble it. Otherwise, personal injury may result.

CAUTION:

If seat belt pretensioner (retractor assembly) was dropped, it should be replaced.

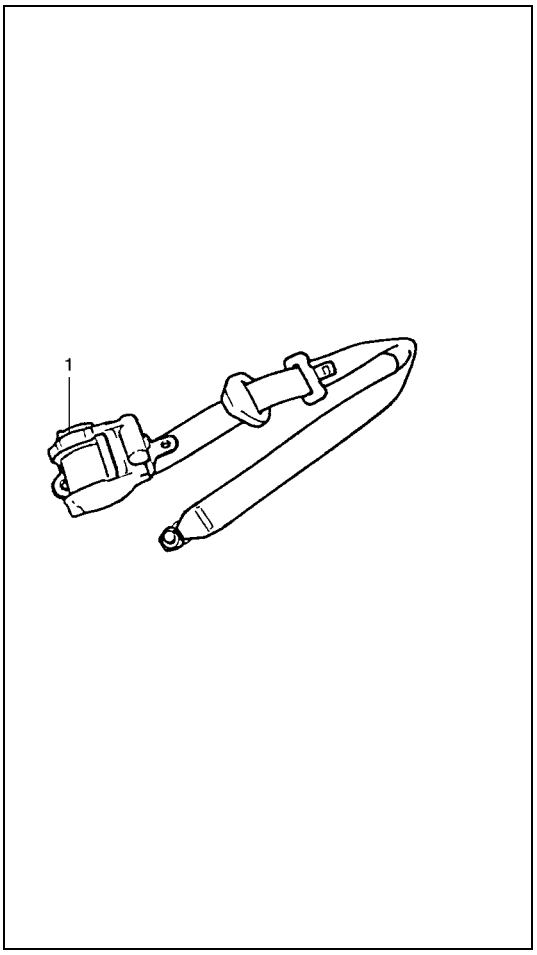

Seat belts and attaching parts can affect the vital components and systems of a vehicle.
Therefore, they should be inspected carefully and replaced with genuine parts only.

- Seat belt
  Its webbing or strap should be free from damage.
- Retractor assembly
  It should lock webbing when pulled quickly.
  The front seat belt retractor assembly (1) should pass the above inspection and should lock webbing even when tilted (approx. 15°) toward the fore and aft or right and left directions.
  Check retractor assembly (1) with seat belt pretensioner appearance visually for following symptoms and if any one of them is applicable, replace it with a new one as an assembly.
- Pretensioner has activated.
- There is a crack in seat belt pretensioner (retractor assembly).
- Wire harness or connector is damaged.
- Seat belt pretensioner (retractor assembly) is damaged or a strong impact (e.g., dropping) was applied to it.
- Anchor bolt
  Anchor bolts should be torqued to specification.
- Belt latch
  It should be secure when latched.

Rear Seat Belt Components

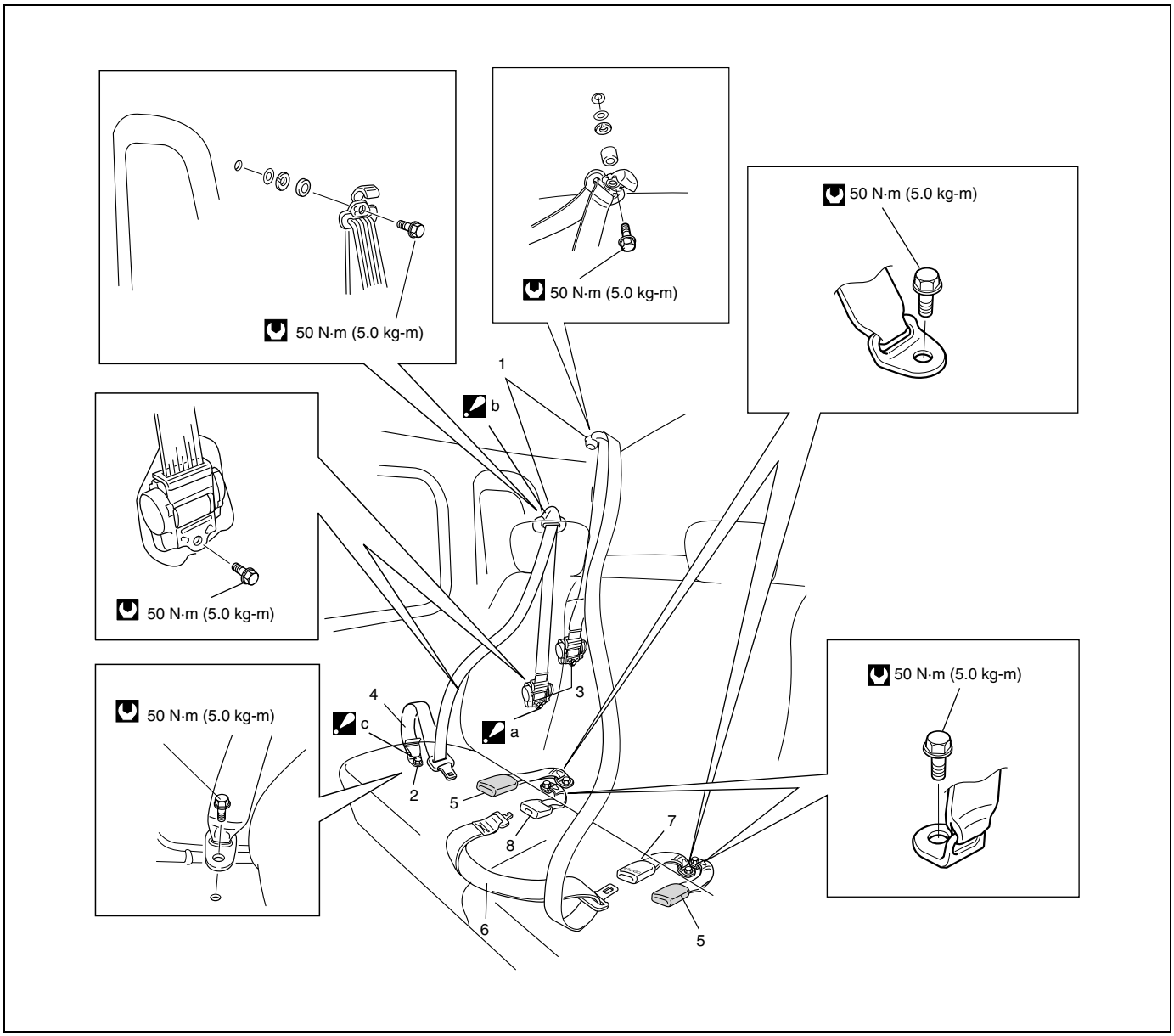

1. Upper anchor	5. Buckle for rear seat belt	a. Retractor side rear seat belt mounting bolt : Tightening order: a → b → c
2. Lower anchor	6. Rear center seat belt with ELR	b. Upper anchor side rear seat belt mounting bolt : Tightening order: a → b → c
3. Retractor assembly	7. Buckle for rear center seat belt	c. Lower anchor side rear seat belt mounting bolt : Tightening order: a → b → c
4. Rear seat belt with A-ELR	8. Connector for rear center seat belt	Tightening torque

Rear Seat Belt Removal and Installation

REMOVAL

WARNING:
Be sure to read "Service Precautions" in Section 10B before starting to work and observe every precaution during work.

1) Remove rear seat cushion, if necessary.
2) Remove rear seat belt(s) as referring to "Rear Seat Belt Components" in this section.

INSTALLATION

Reverse removal procedure to install rear seat belt(s) noting the following constructions.

- Seat belt anchor bolts should have an unified fine thread (7/16-20 UNF). Under no circumstances should any different sized or metric screw threads be used.
- Be sure to tighten rear seat belt mounting bolts in order ("a" – "c") referring to "Rear Seat Belt Components" in this section.
- Tighten rear seat belt mounting bolts to specified torque referring to "Rear Seat Belt Components" in this section.

Rear Seat Belt Inspection

- Check the rear seat belt in the same way as "Front Seat Belt Inspection" in this section.
- As to seat belts with A-ELR, check them as follows in addition to above check.
  – With vehicle at stop, pull seat belt all the way out, let it retract a little and try to pull it. It should not be pulled out, that is, it should be locked where retracted.
  – Let seat belt retract to its original state. Next, pull it half way out, let it retract a little and try to pull it again. It should be pulled out smoothly, that is it should not be locked at this time.

Tightening Torque Specification

Fastening part	Tightening torque		
	N•m	kg-m	lb-ft
Upper and lower anchor bolt	50	5.0	36.0
Retractor assembly bolt	50	5.0	36.0
Retractor assembly screw	5.5	0.55	4.0
Buckle bolt	50	5.0	36.0

SECTION 10B

AIR BAG SYSTEM

WARNING:

- **Service on or around the air bag system components or wiring must be performed only by an authorized SUZUKI dealer. Please observe all WARNINGS and "Service Precautions" under "On-Vehicle Service" in this section before performing service on or around the air bag system components or wiring. Failure to follow WARNINGS could result in unintended activation of the system or could render the system inoperative. Either of these two conditions may result in severe injury.**
- **The procedures in this section must be followed in the order listed to disable the air bag system temporarily and prevent false diagnostic trouble codes from setting. Failure to follow procedures could result in possible activation of the air bag system, personal injury or otherwise unneeded air bag system repairs.**

CAUTION:

When fasteners are removed, always reinstall them at the same location from which they were removed. If a fastener needs to be replaced, use the correct part number fastener for that application. If the correct part number fastener is not available, a fastener of equal size and strength (or stronger) may be used. Fasteners that are not reused, and those requiring thread-locking compound, will be called out. The correct torque value must be used when installing fasteners that require it. If the above conditions are not followed, parts or system damage could result.

CONTENTS

General Description 10B-4
Air Bag System Input/Output Table 10B-4
System Components and Wiring Location View 10B-5
System Wiring Diagram 10B-6
Diagnosis 10B-7
Diagnostic Trouble Code (DTC) 10B-7
Use of Special Tool 10B-8
Intermittents and Poor Connections 10B-10
Air Bag Diagnostic System Check 10B-11
Air Bag Diagnostic System Check Flow Table 10B-12
DTC Check 10B-13
DTC Clearance 10B-13
DTC Table 10B-14
Scan Tool Data 10B-15
Scan Tool Data Definition 10B-15
Table A – "AIR BAG" Warning Lamp Comes ON Steady
Table B – "AIR BAG" Warning Lamp Does Not Come ON
Table C – "AIR BAG" Warning Lamp Flashes 10B-16
Table D – SDM Cannot Communicate Through the Serial Data Circuit 10B-20
DTC B1015 – Passenger Air Bag Initiator Circuit Resistance High
DTC B1016 – Passenger Air Bag Initiator Circuit Resistance Low
DTC B1018 – Passenger Air Bag Initiator Circuit Short to Ground
DTC B1019 – Passenger Air Bag Initiator Circuit Short to Power Circuit 10B-22
DTC B1021 – Driver Air Bag Initiator Circuit Resistance High
DTC B1022 – Driver Air Bag Initiator Circuit Resistance Low
DTC B1024 – Driver Air Bag Initiator Circuit Short to Ground
DTC B1025 – Driver Air Bag Initiator Circuit Short to Power Circuit 10B-27
DTC B1031 – Power Source Voltage High
DTC B1032 – Power Source Voltage Low 10B-33

DTC B1041 – Driver Pretensioner Initiator Circuit Resistance High
DTC B1042 – Driver Pretensioner Initiator Circuit Resistance Low
DTC B1043 – Driver Pretensioner Initiator Circuit Short to Ground
DTC B1044 – Driver Pretensioner Initiator Circuit Short to Power Circuit
DTC B1045 – Passenger Pretensioner Initiator Circuit Resistance High
DTC B1046 – Passenger Pretensioner Initiator Circuit Resistance Low
DTC B1047 – Passenger Pretensioner Initiator Circuit Short to Ground
DTC B1048 – Passenger Pretensioner Initiator Circuit Short to Power Circuit 10B-36
DTC B1051 – Frontal Crash Detected (System Activation Command Outputted) 10B-42
DTC B1056 – Sideward Crash (Driver Side) Detected (Side Air Bag System Activation Command Outputted)
DTC B1057 – Sideward Crash (Passenger Side) Detected (Side Air Bag System Activation Command Outputted) 10B-43
DTC B1058 – Frontal Crash Detected (Pretensioner Activation Command Outputted) 10B-44
DTC B1061 – "AIR BAG" Warning Lamp Circuit Failure 10B-45
DTC B1063 – Side Sensor (Driver Side) Circuit Short to Ground
DTC B1064 – Side Sensor (Driver Side) Circuit Short to Power Circuit Or Open
DTC B1065 – Side Sensor (Passenger Side) Circuit Short to Ground
DTC B1066 – Side Sensor (Passenger Side) Circuit Short to Power Circuit or Open 10B-47
DTC B1071 – Internal SDM Fault 10B-50
DTC B1072 – Internal Side Sensor (Driver Side) Fault
DTC B1074 – Internal Side Sensor (Passenger Side) Fault 10B-50
DTC B1073 – Side Sensor (Driver Side) Correspondence Abnormality
DTC B1075 – Side Sensor (Passenger Side) Correspondence Abnormality 10B-51
DTC B1076 – Wrong Side Sensor (Driver Side) ID
DTC B1077 – Wrong Side Sensor (Passenger Side) ID 10B-54
DTC B1081 – Side Air Bag (Driver Side) Intiator Circuit Resistance High
DTC B1082 – Side Air Bag (Driver Side) Intiator Circuit Resistance Low
DTC B1083 – Side Air Bag (Driver Side) Intiator Circuit Short to Ground
DTC B1084 – Side Air Bag (Driver Side) Intiator Circuit Short to Power Circuit
DTC B1085 – Side Air Bag (Passenger Side) Intiator Circuit Resistance High
DTC B1086 – Side Air Bag (Passenger Side) Intiator Circuit Resistance Low
DTC B1087 – Side Air Bag (Passenger Side) Intiator Circuit Short to Ground
DTC B1088 – Side Air Bag (Passenger Side) Intiator Circuit Short to Power Circuit 10B-55

On-Vehicle Service 10B-61

Service Precautions 10B-61
Service and diagnosis 10B-61
Disabling air bag system 10B-62
Enabling air bag system 10B-63
Handling and storage 10B-64
Repairs and Inspections Required after an Accident 10B-69
Accident with deployment/activation – component replacement 10B-69
Accident with or without deployment/activation – component inspections 10B-69
SDM Removal and Installation 10B-72
SDM Inspection 10B-73
Side Sensor Removal and Installation 10B-73
Side Sensor Inspection 10B-75
Seat Belt Pretensioner Removal and Installation 10B-75
Seat Belt Pretensioner Inspection 10B-75
Passenger Air Bag (Inflator) Module Removal and Installation 10B-76
Passenger Air Bag (Inflator) Module Inspection 10B-77
Side Air Bag (Inflator) Module (If Equipped) Inspection 10B-78
Driver Air Bag (Inflator) Module Removal and Installation 10B-78
Driver Air Bag (Inflator) Module Inspection 10B-78
Contact Coil Assembly 10B-78
Contact Coil Assembly Inspection 10B-78

Air Bag (Inflator) Module and Seat Belt Pretensioner Disposal 10B-79

Deployment/Activation Outside of Vehicle 10B-80

Deployment/Activation Inside of Vehicle 10B-88
Deployed Air Bag (Inflator) Module and Activated Seat Belt Pretensioner Disposal 10B-93
Tightening Torque Specification 10B-94
Special Tool 10B-94

General Description

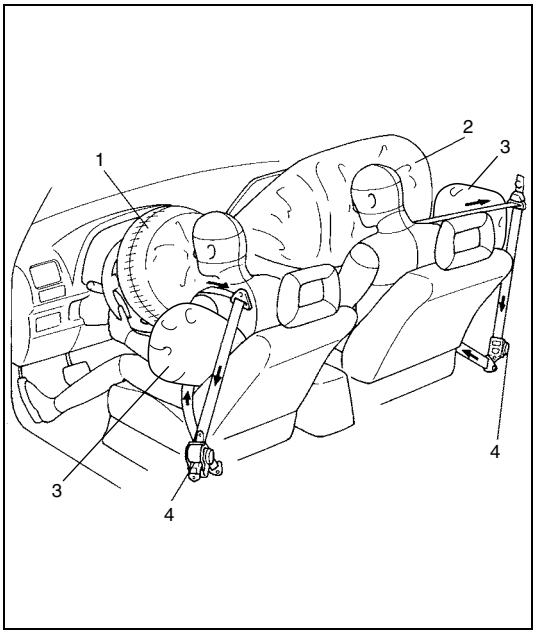

With the air bag system which includes front air bags and side air bags for both the driver's and passenger's sides as well as the seat belt pretensioners, the sag of the seat belt is taken up (for seat belt with pretensioner), the driver air bag (inflator) module is deployed from the center of the steering column and the passenger air bag (inflator) module from the top of the instrument panel in front of the front passenger seat in occurrence of a front collision with an impact larger than a certain set value to supplement protection offered by the driver and front passenger seat belts. Side air bag (inflator) module is deployed from the side of the seat back in occurrence of a sideward collision with an impact larger than a certain set value.

1. Driver side air bag
2. Passenger side air bag
3. Side air bag
4. Seat belt pretensioner

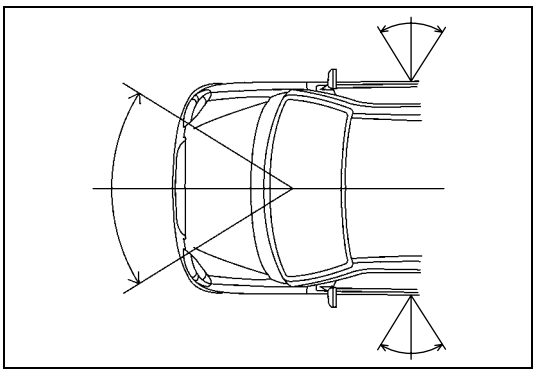

The air bag system is designed to activate only in severe frontal and sideward collisions. It is not designed to activate in rear impacts, rollovers, or minor frontal and sideward collisions, since it would offer no protection in those types of accidents.

Air Bag System Input/Output Table

INPUT \ OUTPUT		Driver air bag, Passenger air bag, Seat belt with pretensioner (LH) and Seat belt with pretensioner (RH)	Right side air bag	Left side air bag
Signal from sensor	Sensor in SDM	○	—	—
	Right side sensor	—	○	—
	Left side sensor	—	—	○

System Components and Wiring Location View

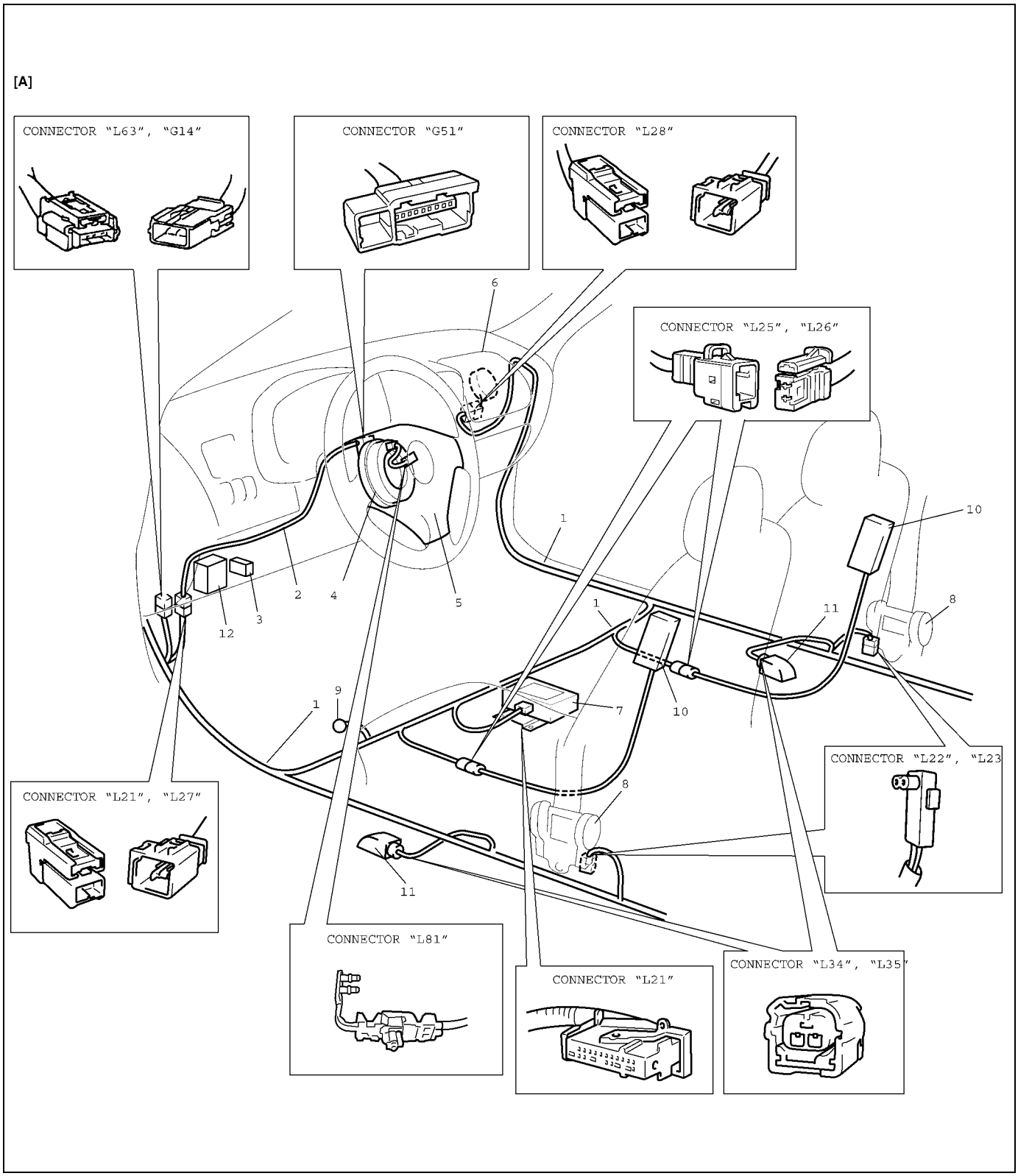

[A]: LH steering vehicle show	5. Driver air bag (inflator) module	10. Side air bag (inflator) module (if equipped)
1. Air bag harness in floor harness	6. Passenger air bag (inflator) module	11. Side Sensor (if equipped)
2. Air bag harness in instrument panel harness	7. SDM	12. Air bag fuse in circuit fuse box
3. DLC	8. Seat belt pretensioner (retractor assembly)	
4. Contact coil assembly	9. Ground for air bag system	

System Wiring Diagram

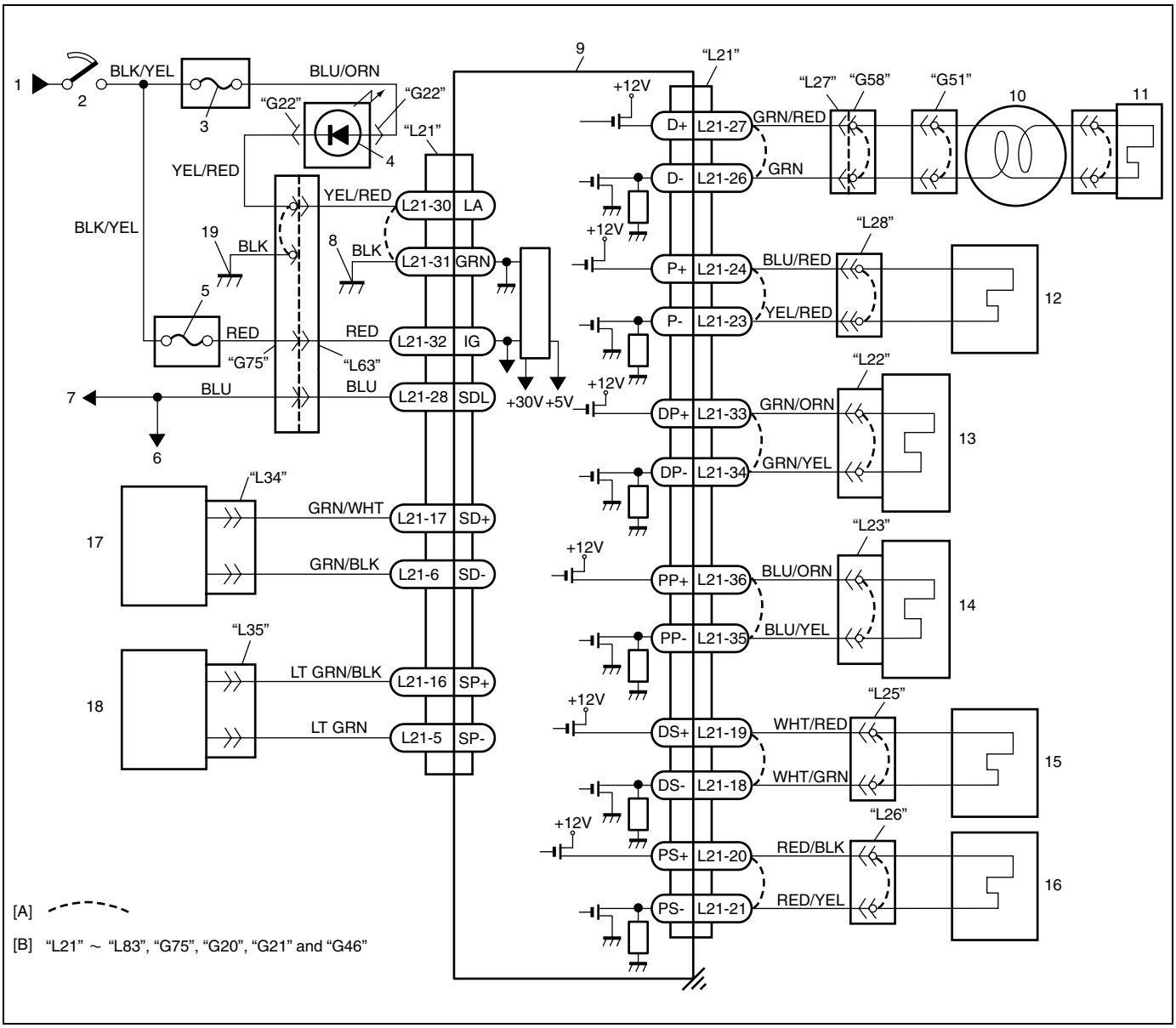

[A]: Shorting bar	6. To ECM and ABS control module (if equipped)	13. Driver seat belt pretensioner
[B]: Connector	7. To data link connector (DLC)	14. Passenger seat belt pretensioner
1. From main fuse	8. Ground for air bag system	15. Side air bag (inflator) module at driver side (if equipped)
2. Ignition switch	9. SDM	16. Side air bag (inflator) module at passenger side (if equipped)
3. "METER" fuse	10. Contact coil assembly	17. Side sensor at driver side (if equipped)
4. "AIR BAG" warning lamp in combination meter	11. Driver air bag (inflator) module	18. Side sensor at passenger side (if equipped)
5. "AIR BAG" fuse	12. Passenger air bag (inflator) module	19. Ground on body

TERMINAL ARRANGEMENT OF SDM CONNECTOR (VIEWED FROM HARNESS SIDE)

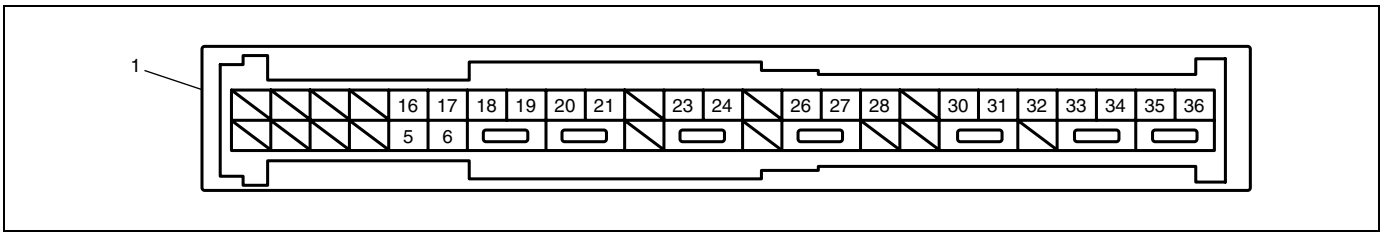

1. CONNECTOR "L21" (SDM CONNECTOR)

CONNECTOR “L21” (SDM connector)

TERMINAL	CIRCUIT		TERMINAL	CIRCUIT	
L21-1	–		L21-20	Side air bag (inflator) module (passenger side) (if equipped)	High
L21-2	–		L21-21		Low
L21-3	–		L21-22	–	
L21-4	–		L21-23	Passenger air bag (inflator) module	Low
L21-5	Side sensor (passenger side)	Low	L21-24		High
L21-6	Side sensor (driver side)	Low	L21-25	–	
L21-7	–		L21-26	Driver air bag (inflator) module	Low
L21-8	–		L21-27		High
L21-9	–		L21-28	Data link connector (DLC)	
L21-10	–		L21-29	–	
L21-11	–		L21-30	“AIR BAG” warning lamp	
L21-12	–		L21-31	Ground	
L21-13	–		L21-32	Ignition switch (power source)	
L21-14	–		L21-33	Driver pretensioner	High
L21-15	–		L21-34		Low
L21-16	Side sensor (passenger side) (if equipped)	High	L21-35	Passenger pretensioner	Low
L21-17	Side sensor (driver side) (if equipped)	High	L21-36		High
L21-18	Side air bag (inflator) module (driver side) (if equipped)	Low			
L21-19		High			

Diagnosis

WARNING:

To avoid deployment when troubleshooting the air bag system, do not use electrical test equipment such as a battery powered or AC powered voltmeter, ohmmeter, etc., or any type of electrical equipment other than that specified in this manual. Do not use a non-powered probe type tester. Instructions in this manual must be followed carefully, otherwise personal injury may result.

Diagnostic Trouble Code (DTC)

The “Air Bag Diagnostic System Check” must always be the starting point of any air bag system diagnosis. The “Air Bag Diagnostic System Check” checks for proper “AIR BAG” warning lamp operation and checks for air bag diagnostic trouble codes (DTCs) using Suzuki Scan Tool.

Use of Special Tool

WARNING:
To avoid deployment when troubleshooting the air bag system, do not use electrical test equipment such as a battery powered or AC powered voltmeter, ohmmeter, etc., or any type of electrical equipment other than that specified in this manual. Do not use a non-powered probe type tester. Instructions in this manual must be followed carefully, otherwise personal injury may result.

You should be familiar with the tools listed in this section under the heading “Special Tool”. You should be able to measure voltage and resistance. You should be familiar with proper use of a scan tool such as Air Bag Driver/ Passenger Load Tool, Connector Test Adapter Kit and the Digital Multimeter.

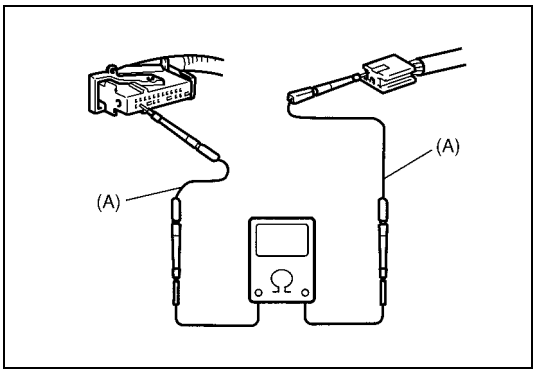

Special tool
(A): 09932-76010 (Connector Test Adapter Kit)

This must be used whenever a diagnostic procedure requests checking or probing a terminal.
Using the appropriate adapter in the special tool will ensure that no damage to the terminal will occur from the multimeter probe, such as spreading or bending.

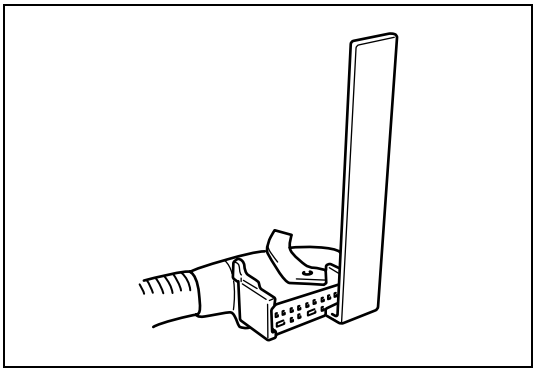

An SDM short bar release tool is included in the connector test adapter kit.

Inserting it into the SDM connector will release the shorting bar.

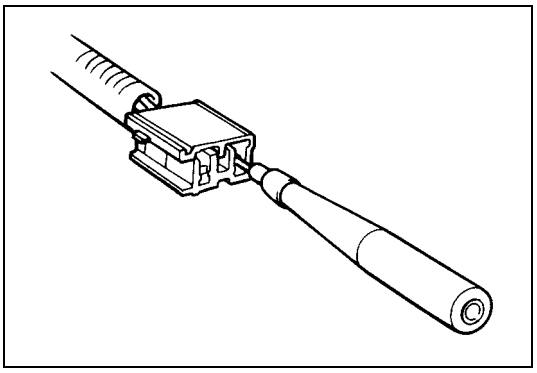

The adapter will also give an idea of whether contact tension is sufficient, helping to find an open or intermittent open due to poor terminal contact.

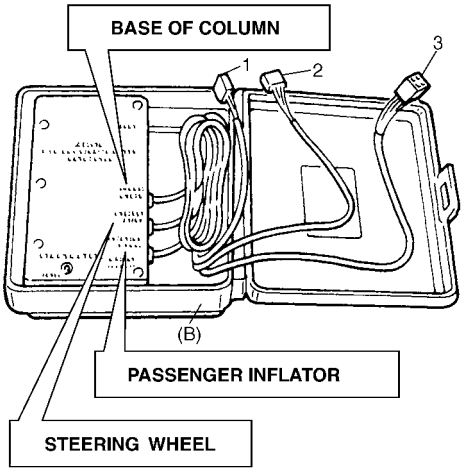

Special tool
(B): 09932-75010 (Air Bag Driver/Passenger Load Tool)

This tool is used only when called for in this section. It is used as a diagnostic aid and safety device to prevent inadvertent air bag (inflator) module deployment.
The load tool has three connectors attached to its case which are electrically functional and serve as resistive load substitutions.
No more than two connectors are used at any time.

One of connectors ("STEERING WHEEL") is used to substitute the load of followings.

- Driver air bag (inflator) module when it is connected at the top of the column to the contact coil assembly.
- Passenger air bag (inflator) module when it is connected to the air bag harness connector in floor harness for passenger air bag (inflator) module.
- Side air bag (inflator) module (driver and passenger side) when it is connected to the floor harness connector for side air bag (inflator) module.
- Each of driver and passenger seat belt pretensioners when it is connected to floor harness connector for driver and passenger seat belt pretensioners.

Another connector ("BASE OF COLUMN") is used to substitute the load of the driver air bag (inflator) module and the contact coil assembly when it is connected at the base of the column to the air bag wire harness in floor harness.
The third connector ("PASSENGER INFLATOR") is not used.

By substituting the resistance of the load tool when called for, a determination can be made as to whether an inflator circuit component is causing system malfunction and which component is causing the malfunction.
The load tool should be used only when specifically called for in the diagnostic procedures.

1. Connector for contact coil and driver air bag (inflator) module (Located near the base of the steering column)
2. Connector for driver and passenger air bag (inflator) module, side air bag (inflator) module (driver and passenger side) and driver and passenger seat belt pretensioners
3. Not used

Intermittents and Poor Connections

Most intermittents are caused by faulty electrical connections or wiring. When a check for proper connection is requested in a diagnostic flow table, perform careful check of suspect circuits for:

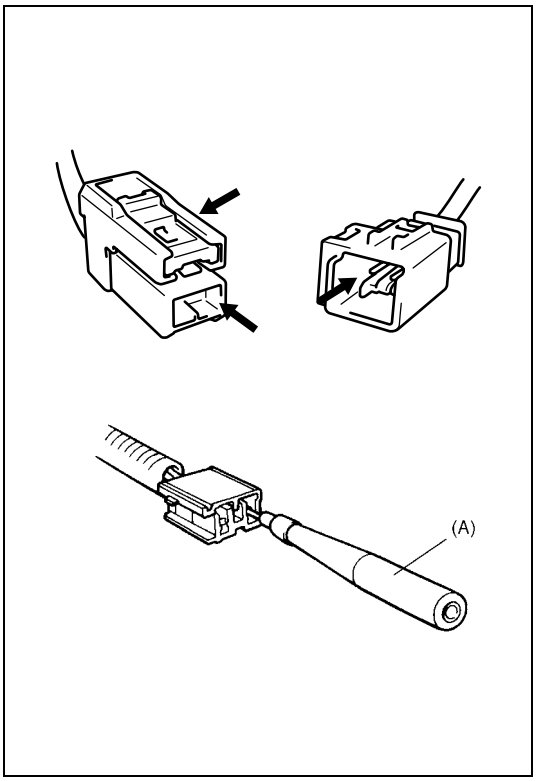

- Check connector for loose connection.
- Poor mating of connector halves, or terminals not fully seated in the connector body (backed out).
- Dirt or corrosion on the terminals. The terminals must be clean and free of any foreign material which could impede proper terminal contact.
  However, cleaning the terminal with a sand paper or the like is prohibited.
- Damaged connector body, exposing the terminals to moisture and dirt, as well as not maintaining proper terminal orientation with the component or mating connector.
- Improperly formed or damaged terminals.
  Check each connector terminal in problem circuits carefully to ensure good contact tension by using the corresponding mating terminal included in the connector test adapter kit (special tool).
  If contact tension is not enough, reform it to increase contact tension or replace.

Special tool
(A): 09932-76010 (Connector Test Adapter Kit)

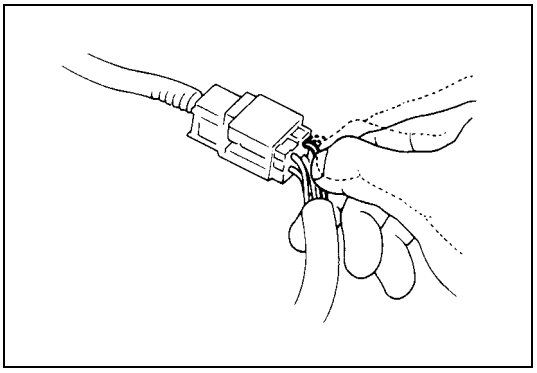

- Poor terminal-to-wire connection.
  Check each wire harness in problem circuits for poor connection by shaking it by hand lightly. If any abnormal condition is found, change the wire harness assembly or component parts with new ones.

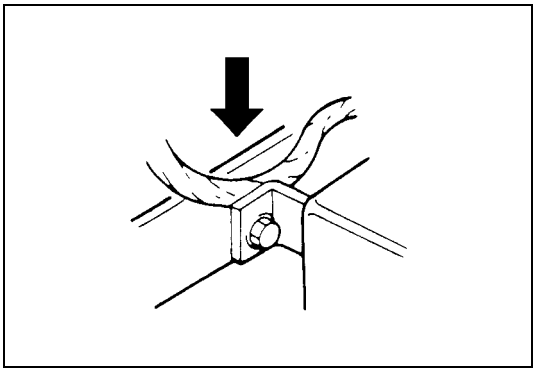

- Wire insulation which is rubbed through, causing an intermittent short as the bare area touches other wiring or parts of the vehicle.
- Wire broken inside the insulation. This condition could cause a continuity check to show a good circuit, but if only 1 or 2 strands of a multi-strand-type wire are intact, resistance could be far too high.

If any abnormality is found, repair or replace as a wire harness assembly.

Air Bag Diagnostic System Check

WARNING:

To avoid deployment when troubleshooting the air bag system, do not use electrical test equipment such as a battery powered or AC powered voltmeter, ohmmeter, etc., or any type of electrical equipment other than that specified in this manual. Do not use a non-powered probe type tester. Instructions in this manual must be followed carefully, otherwise personal injury may result.

CAUTION:

The order in which diagnostic trouble codes are diagnosed is very important. Failure to diagnose the diagnostic trouble codes in the order specified may result in extended diagnostic time, incorrect diagnosis and incorrect parts replacement.

The diagnostic procedures used in this section are designed to find and repair air bag system malfunctions. To get the best results, it is important to use the diagnostic flow tables and follow the sequence listed below.

1) Perform the “Air Bag Diagnostic System Check Flow Table”.
   (The “Air Bag Diagnostic System Check Flow Table” must be the starting point of any air bag system diagnosis.
   The “Air Bag Diagnostic System Check Flow Table” checks for proper “AIR BAG” warning lamp operation through “AIR BAG” warning lamp and whether air bag diagnostic trouble codes exist.)
2) Refer to the proper diagnostic table as directed by the “Air Bag Diagnostic System Check Flow Table”.
   (The “Air Bag Diagnostic System Check Flow Table” will lead you to the correct table to diagnose any air bag system malfunctions. Bypassing these procedures may result in extended diagnostic time, incorrect diagnosis and incorrect parts replacement.)
3) Repeat the “Air Bag Diagnostic System Check Flow Table” after any repair or diagnostic procedures have been performed.
   (Performing the “Air Bag Diagnostic System Check Flow Table” after all repair or diagnostic procedures will ensure that the repair has been made correctly and that no other malfunctions exist.)

FLOW TABLE TEST DESCRIPTION

STEP 1: Check that “AIR BAG” warning lamp lights.
STEP 2: Check that “AIR BAG” warning lamp lights.
STEP 3: Check that “AIR BAG” warning lamp flashes 6 times after ignition switch is turned ON.
STEP 4: Check that history codes are in SDM memory.
STEP 5: Check that current code is in SDM memory.

Air Bag Diagnostic System Check Flow Table

Step	Action	Yes	No
1	1) Make sure that battery voltage is about 11 V or higher. 2) Note “AIR BAG” warning lamp as ignition switch is tuned ON. Does “AIR BAG” warning lamp come ON when ignition switch is tuned ON?	Go to step 2.	Proceed to “Table A – “AIR BAG” Warning Lamp Comes ON Steady Table B – “AIR BAG” Warning Lamp Does Not Come ON Table C – “AIR BAG” Warning Lamp Flashes” in this section.
2	Does “AIR BAG” warning lamp come ON steady?	Proceed to “Table A – “AIR BAG” Warning Lamp Comes ON Steady Table B – “AIR BAG” Warning Lamp Does Not Come ON Table C – “AIR BAG” Warning Lamp Flashes” in this section.	Go to step 3.
3	Does “AIR BAG” warning lamp turn OFF, after flashing 6 times?	“AIR BAG” warning lamp circuit is good condition. Go to step 4.	“AIR BAG” warning lamp circuit is good condition. Go to step 5.
4	1) Check DTC using Suzuki Scan Tool. Refer to “DTC Check” in this section. Is “NO CODES” displayed on Suzuki Scan Tool?	Air bag system is in good condition.	An intermittent trouble has occurred at some place. Check the connector harness, etc. related to the sensed DTC. Refer to “Intermittents and Poor Connections” in this section. Then clear DTC (Refer to “DTC Clearance” in this section.) and repeat this table.
5	1) Check DTC using Suzuki Scan Tool. Refer to “DTC Check” in this section. Is “NO CODES” displayed on Suzuki Scan Tool?	Substitute a known-good SDM and recheck.	Check and repair according to Flow Table corresponding to that DTC.

DTC Check

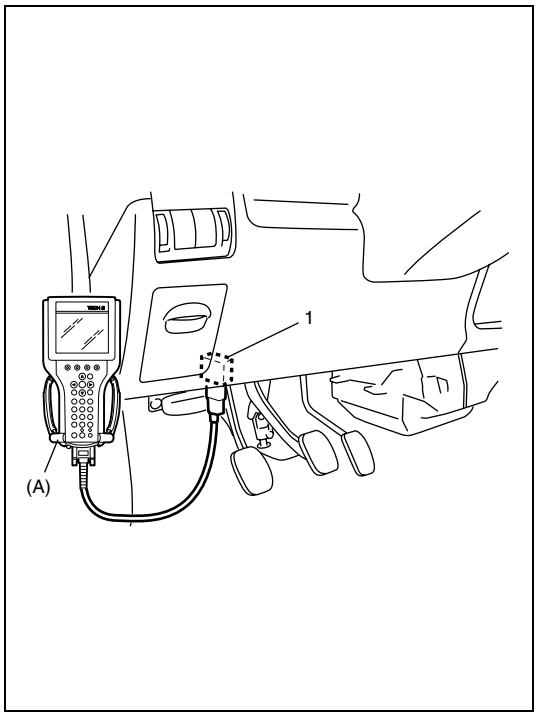

1) Turn ignition switch to OFF position.
2) After setting cartridge to Suzuki Scan Tool, connect it to data link connector (DLC) located on underside of instrument panel at driver's seat side.

Special tool
(A): Suzuki Scan Tooll

3) Turn ignition switch to ON position.
4) Read DTC according to instructions displayed on Suzuki Scan Tool and print it or write it down. Refer to Suzuki Scan Tool operator's manual for further details.
   If communication between scan tool and SDM is impossible, proceed to "Diagnostic Flow Table D" (Serial data check circuit).
5) After completing the check, turn ignition switch to OFF position and disconnect Suzuki Scan Tool from data link connector (DLC).

1. Data link connector (DLC)

DTC Clearance

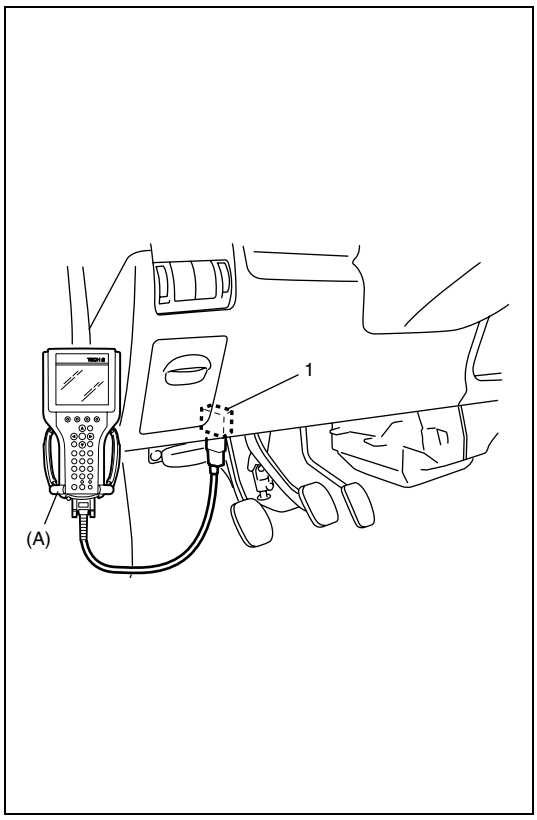

1) Turn ignition switch to OFF position.
2) Connect Suzuki Scan Tool to data link connector (DLC) in the same manner as when making this connection for DTC check.

Special tool
(A): Suzuki Scan Tool

3) Turn ignition switch to ON position.
4) Erase DTC according to instructions displayed on Suzuki Scan Tool.
   Refer to Suzuki Scan Tool operator's manual for further details.
5) After completing the check, turn ignition switch to OFF position and disconnect Suzuki Scan Tool from DLC.
6) Perform "DTC Check" and confirm that normal DTC (NO CODES) is displayed and not malfunction DTC.

NOTE:

If DTC B1051, B1058, B1071 is stored in SDM, it is not possible to clear all DTC.

1. Data link connector (DLC)

DTC Table

DTC	Diagnosis		
–	Normal		–
B1015	Passenger air bag circuit	Resistance high	Diagnose trouble according to diagnostic flow table corresponding to each code No.
B1016		Resistance low	
B1018		Short to ground	
B1019		Short to power circuit	
B1021	Driver air bag circuit	Resistance high	
B1022		Resistance low	
B1024		Short to ground	
B1025		Short to power circuit	
B1031	Power source voltage	Too high	
B1032		Too low	
B1041	Driver pretensioner circuit	Resistance high	
B1042		Resistance low	
B1043		Short to ground	
B1044		Short to power circuit	
B1045	Passenger pretensioner circuit	Resistance high	
B1046		Resistance low	
B1047		Short to ground	
B1048		Short to power circuit	
B1051	SDM	Frontal crash detected	
B1056		Sideward crash (driver side) detected	
B1057		Sideward crash (passenger side) detected	
B1058		Frontal crash detected (pretensioner activation command outputted)	
B1061	“AIR BAG” warning lamp circuit	Circuit failure	
B1063	Side sensor circuit (driver side)	Short to ground	
B1064		Short to power circuit or open	
B1065	Side sensor circuit (passenger side)	Short to ground	
B1066		Short to power circuit or open	
B1071	SDM	Internal fault	
B1072	Side sensor (driver side)	Internal fault	
B1073	Side sensor circuit (driver side)	Correspondence abnormality	
B1074	Side sensor (passenger side)	Internal fault	
B1075	Side sensor circuit (passenger side)	Correspondence abnormality	
B1076	Side sensor (driver side)	Wrong ID	
B1077	Side sensor (passenger side)	Wrong ID	
B1081	Side air bag circuit (driver side)	Resistance high	
B1082		Resistance low	
B1083		Short to ground	
B1084		Short to power circuit	
B1085	Side air bag circuit (passenger side)	Resistance high	
B1086		Resistance low	
B1087		Short to ground	
B1088		Short to power circuit	

Scan Tool Data

As the data values given below are standard values estimated on basis of obtained from the normally operating vehicle by using a scan tool, use them as reference value.

NOTE:

When checking the data with the engine running at idle or racing, be sure to shift M/T gear to the neutral gear position and A/T gear to the "Park" position and pull the parking brake fully. Also, if nothing or "no load" is indicated, turn OFF A/C, all electric loads and all the other necessary switches.

Scan Tool Data	Normal Condition/Reference Value
Back Up Volt	27.0 – 33.0 V
Battery Voltage	10.6 – 16.5 V
System ID	4 ch or 6 ch
Driv Air Bag Ini Res	2.5 – 3.4 OHMS
Pass Air Bag Ini Res	1.9 – 2.5 OHMS
Driv Preten Ini Res	1.8 – 2.5 OHMS
Pass Preten Ini Res	1.8 – 2.5 OHMS
Driv Sidebag Ini Res	1.7 – 2.3 OHMS
Pass Sidebag Ini Res	1.7 – 2.3 OHMS

Scan Tool Data Definition

Back Up Volt (V): This parameter indicates the capacity of the backup condenser installed to maintain the ignition current (as much as possible) even when the power supply to SDM that ignites the inflator is shut off.
Battery Voltage (V): Battery voltage is an analog input signal read by the SDM.
System ID (4 ch/6 ch): This parameter indicates the number of initiator circuits.
Driv Air Bag Ini Res (OHMS (Ω)): This parameter indicates the resistance of the driver's air bag initiator circuit.
Pass Air Bag Ini Res (OHMS (Ω)): This parameter indicates the resistance of the passenger's air bag initiator circuit.
Driv Preten Ini Res (OHMS (Ω)): This parameter indicates the resistance of the driver's seat belt pretensioner initiator circuit.
Pass Preten Ini Res (OHMS (Ω)): This parameter indicates the resistance of the passenger's seat belt pretensioner initiator circuit.
Driv Sidebag Ini Res (OHMS (Ω)): This parameter indicates the resistance of the driver's side air bag initiator circuit.
Pass Sidebag Ini Res (OHMS (Ω)): This parameter indicates the resistance of the passenger's side air bag initiator circuit.

Table A – "AIR BAG" Warning Lamp Comes ON Steady
Table B – "AIR BAG" Warning Lamp Does Not Come ON
Table C – "AIR BAG" Warning Lamp Flashes

WIRING DIAGRAM

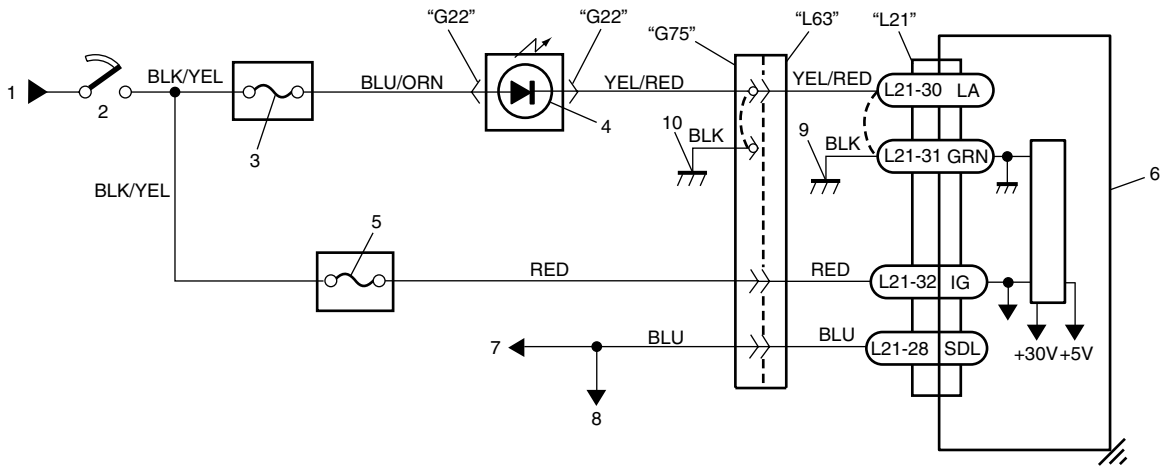

1. From main fuse	5. "AIR BAG" fuse	9. Ground for air bag system
2. Ignition switch	6. SDM	10. Ground on body
3. "METER" fuse	7. To DLC	
4. "AIR BAG" warning lamp in combination meter	8. To ECM and ABS control module (if equipped)	

CAUTION:

- **Be sure to perform "Air Bag Diagnostic System Check" before starting diagnosis according to flow table.**
- **When measurement of resistance or voltage is required in this table, use a tester along with a correct terminal adapter from special tool (Connector test adapter kit).**
- **When a check for proper connection is required, refer to "Intermittents and Poor Connections" in this section.**
- **If there is open circuit in the air bag wire harness, connector or terminal is found damaged, replace the wire harness, connector and terminal as an assembly.**

TABLE TEST DESCRIPTION

Table A: "AIR BAG" Warning Lamp Come ON Steady

STEP 1: Check for "AIR BAG" fuse blown.
STEP 2: Check for loose connection between floor wire harness and instrument panel wire harness.
STEP 3: Check for loose connection between SDM connector and SDM.
STEP 4: Check for power supply circuit.
STEP 5: Check for short circuit between "AIR BAG" warning lamp circuit and ground.

Table B: "AIR BAG" Warning Lamp Does Not Come ON

STEP 1: Check for combination meter power supply circuit.
STEP 2: Check for "AIR BAG" warning lamp blown.
STEP 3: Check for open circuit in "AIR BAG" warning lamp circuit.
STEP 4: Check for short circuit between "AIR BAG" warning lamp circuit and power supply circuit.

Table C: "AIR BAG" Warning Lamp Flashes

Check for short circuit between diagnosis switch circuit and ground.

DIAGNOSTIC FLOW TABLE

Table A: "AIR BAG" Warning Lamp Come ON Steady

Step	Action	Yes	No
1	1) Ignition switch turn to OFF position. 2) Remove and inspect "AIR BAG" fuse. Is fuse good?	Go to step 2.	Clear up short circuit between "RED" wire and ground. After clearing up, replace "AIR BAG" fuse.
2	1) Check for loose connection between "G75" and "L63" connectors. Is connection good?	Go to step 3.	Clear up loose connection between "G75" and "L63" connectors.
3	1) Check for loose connection between SDM connector "L21" and SDM. Is connection good?	Go to step 4.	Clear up loose connection between SDM connector "L21" and SDM.
4	1) Disconnect SDM connector "L21". 2) Turn ignition switch to ON position. 3) Measure voltage between "L21-32" terminal and body ground. Is it 10 – 14V?	Go to step 5.	Check and clear up the following possible cause. • Open circuit in "RED" or "BLK/YEL" wire. • Short circuit between "BLK/YEL" and ground.
5	1) Disconnect "G22" connector from combination meter referring to "Combination meter" in Section 8. 2) Release shorting bar of "L21-30" terminal inserting release tool (A). 3) Measure resistance between "L21-30" terminal and body ground. Is resistance infinity?	Substitute a known-good SDM and recheck.	Clear up short circuit between "YEL/RED" wire and ground.

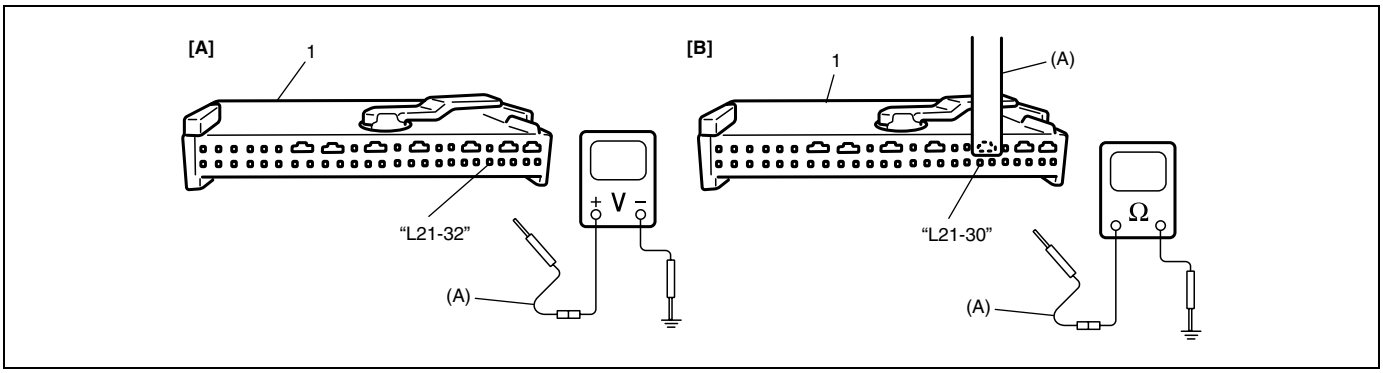

[A]: Fig. for Step 4
[B]: Fig. for Step 5
1. SDM connector "L21"

Special tool
(A): 09932-76010

NOTE:

Upon completion of inspection and repair work, perform the following items.

- **Reconnect all air bag system components, ensure all components are properly mounted.**
- **Repeat "Air Bag Diagnostic System Check" to confirm that the trouble has been corrected.**

Table B: "AIR BAG" Warning Lamp Does Not Come ON

Step	Action	Yes	No
1	1) Set parking brake. 2) Turn ignition switch to ON position. Does brake system warning light ("BRAKE") come ON?	Go to Step 2.	Check and clear up the following possible cause. • Open Circuit in "BLK/RED" or "BLK/YEL" wire. • Short circuit between "BLK/RED" or "BLK/YEL" and ground. • "METER" fuse blown.
2	1) Turn ignition switch to OFF position. 2) Disconnect SDM connector "L21". 3) Turn ignition switch to ON position. Does "AIR BAG" warning lamp come ON?	Substitute a known-good SDM and recheck.	Go to Step 3.
3	1) Turn ignition switch to OFF position. 2) Remove combination meter referring to "Combination Meter" in Section 8. 3) Release shorting bar of "L21-30" terminal inserting release tool (A). 4) Check continuity between "G22-2" and "L21-30" terminals. Is there any continuity?	Replace combination meter.	Go to Step 4.
4	1) Check for loose connection between "G75" and "L63" connector. Is connection good?	Clear up open circuit in "YEL/RED" wire.	Clear up loose connection between "G75" and "L63" connectors.

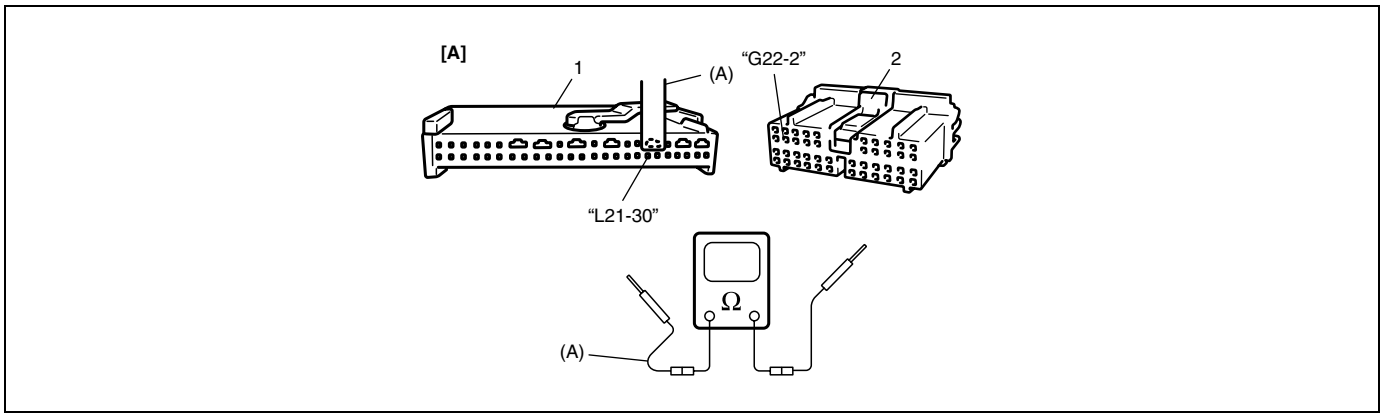

[A]: Fig. for Step 3
1. SDM connector "L21"
2. "G22" connector (22-pin) for combination meter

Special tool
(A): 09932-76010

NOTE:

Upon completion of inspection and repair work, perform the following items.
- **Reconnect all air bag system components, ensure all components are properly mounted.**
- **Repeat "Air Bag Diagnostic System Check" to confirm that the trouble has been corrected.**

Table C: "AIR BAG" Warning Lamp Flashes

Step	Action	Yes	No
1	1) With ignition switch OFF, disconnect SDM connector "L21". 2) Check "L21-8" terminal of SDM. Is it shorted to ground terminal or harness.	Clean up terminal.	Substitute a known-good SDM and recheck.

Special tool
(A): 09932-76010

NOTE:

Upon completion of inspection and repair work, perform the following items.
- **Reconnect all air bag system components, ensure all components are properly mounted.**
- **Repeat "Air Bag Diagnostic System Check" to confirm that the trouble has been corrected.**

Table D – SDM Cannot Communicate Through the Serial Data Circuit

WIRING DIAGRAM

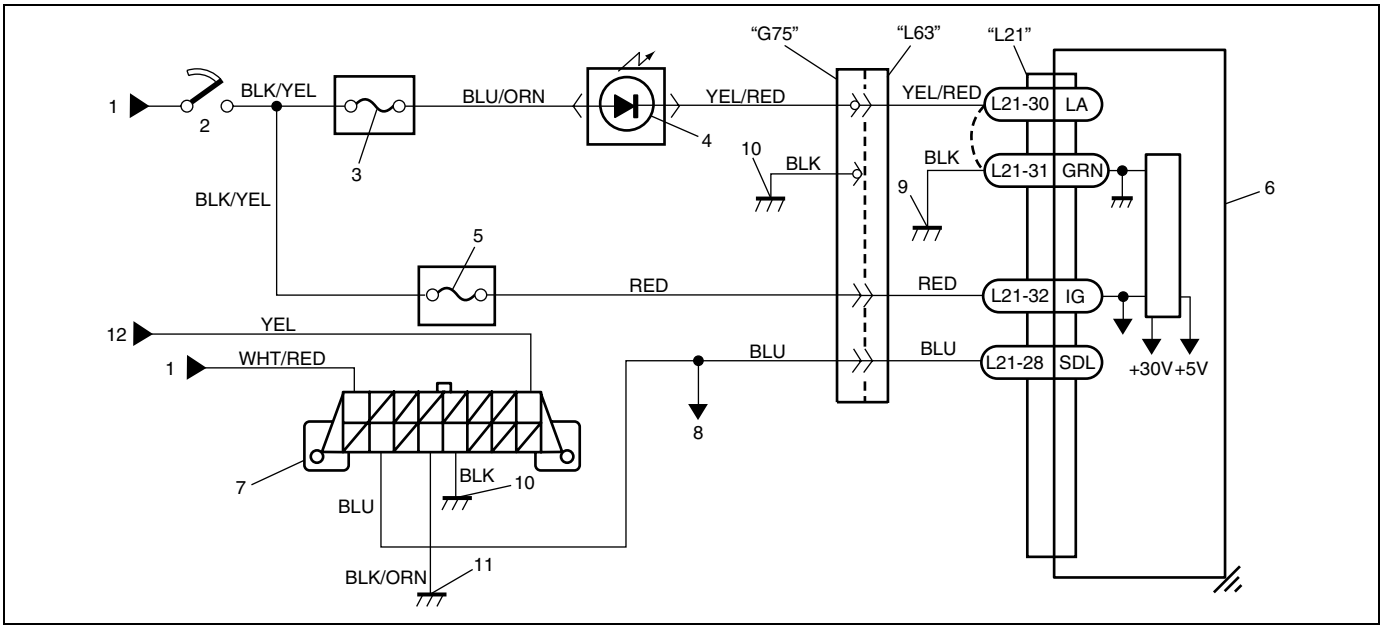

1. From main fuse	5. "AIR BAG" fuse	9. Ground for air bag system
2. Ignition switch	6. SDM	10. Ground on body
3. "METER" fuse	7. DLC	11. Ground on Engine block
4. "AIR BAG" warning lamp in combination meter	8. To ECM, and ABS control module (if equipped)	12. Immobilizer control module (if equipped)

CAUTION:

- **Be sure to perform "Air Bag Diagnostic System Check" before starting diagnosis according to flow table.**
- **When measurement of resistance or voltage is required in this table, use a tester along with a correct terminal adapter from special tool (Connector test adapter kit).**
- **When a check for proper connection is required, refer to "Intermittents and Poor Connections" in this section.**
- **If there is open circuit in the air bag wire harness, connector or terminal is found damaged, replace the wire harness, connector and terminal as an assembly.**

TABLE TEST DESCRIPTION

STEP 1: An improper connection to the data link connector (DLC) will prevent communications from being established.
STEP 2: This test checks whether it is possible to communicate with other control module.
STEP 3: This test checks for an open in "Serial data" circuit.

DIAGNOSTIC FLOW TABLE

Step	Action	Yes	No
1	1) Make sure that Suzuki Scan Tool is free from malfunction and correct PC card. 2) Ignition switch OFF. 3) Check proper connection of Suzuki Scan Tool to DLC. Is connection in good condition?	Go to step 2.	Properly connect Suzuki Scan Tool to DLC.

Step	Action	Yes	No
2	1) Check if communication is possible by trying communication with other control module (ECM or ABS control module (if equipped)). Is it possible to communicate with other control module?	Go to step 3.	Repair open in common section of serial data circuit (“BLU” wire circuit) used by all controllers or short to ground or power circuit which has occurred somewhere in serial data circuit (“BLU” wire circuit).
3	1) With ignition switch OFF, disconnect SDM connector “L21” and “L63” connector. 2) Check proper connection at “L63-1” (“BLU” wire) terminal for DLC. 3) If OK, then check resistance between “L63-1” (“BLU” wire) terminal and “L21-28” terminal of SDM connector “L21”. Is resistance 0 – 1 Ω?	Substitute a known-good SDM and recheck.	Repair high resistance or open in “BLU” wire circuit (between “L83” connector and SDM).

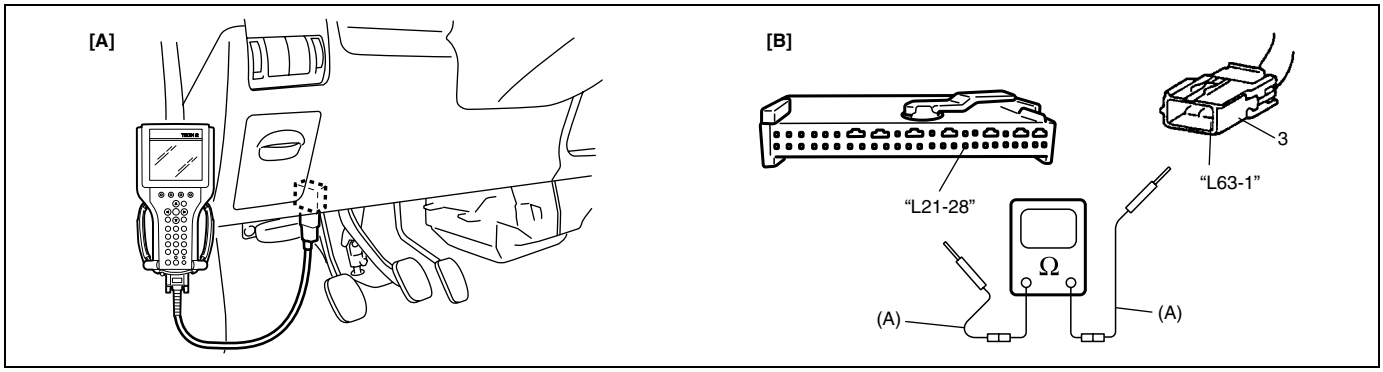

[A]: Fig. for STEP 1
[B]: Fig. for STEP 3
1. DLC
2. Scan tool
3. Floor harness side connector

Special tool
(A): 09932-76010

NOTE:

Upon completion of inspection and repair work, perform the following items.

- **Reconnect all air bag system components, ensure all components are properly mounted.**
- **Repeat “Air Bag Diagnostic System Check” to confirm that the trouble has been corrected.**

DTC B1015 – Passenger Air Bag Initiator Circuit Resistance High
DTC B1016 – Passenger Air Bag Initiator Circuit Resistance Low
DTC B1018 – Passenger Air Bag Initiator Circuit Short to Ground
DTC B1019 – Passenger Air Bag Initiator Circuit Short to Power Circuit

WIRING DIAGRAM

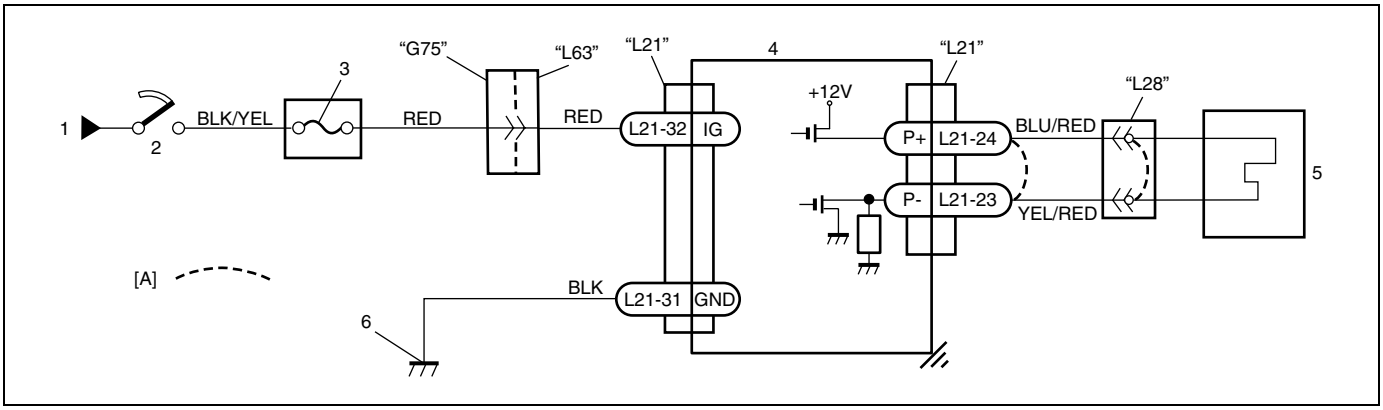

[A]: Shorting bar	2. Ignition switch	4. SDM	6. Ground for air bag system
1. From main fuse	3. "AIR BAG" fuse	5. Passenger air bag (inflator) module	

CAUTION:

- **Be sure to perform "Air Bag Diagnostic System Check" before starting diagnosis according to flow table.**
- **When measurement of resistance or voltage is required in this table, use a tester along with a correct terminal adaptor from special tool (Connector test adapter kit).**
- **When a check for proper connection is required, refer to "Intermittents and Poor Connections" in this section.**
- **If there is open circuit in the air bag wire harness, connector or terminal is found damaged, replace the wire harness, connector and terminal as an assembly.**

DTC WILL BE SET WHEN

DTC B1015:

The combined resistance of the passenger air bag (inflator) module, harness wiring and connector terminal contact is above a specified value for specified time.

DTC B1016:

The combined resistance of the passenger air bag (inflator) module, harness wiring and connector terminal contact is below a specified value for specified time.

DTC B1018:

The voltage measured at passenger air bag initiator circuit is below a specified value for specified time.

DTC B1019:

The voltage measured at passenger air bag initiator circuit is above a specified value for specified time.

TABLE TEST DESCRIPTION

DTC B1015, B1016, B1018 or B1019:

STEP 1: Check whether malfunction is in passenger air bag (inflator) module.
STEP 2: Check passenger air bag (inflator) module initiator circuit in air bag harness.
STEP 3: Check passenger air bag (inflator) module initiator circuit in air bag harness. (for DTC B1019 only)

DIAGNOSTIC FLOW TABLE

DTC B1015:

Step	Action	Yes	No
1	1) With ignition switch OFF, disconnect passenger air bag (inflator) module connector “L28” behind the glove box. 2) Check proper connection to passenger air bag (inflator) module at terminals in “L28” connector. 3) If OK, then connect Special Tool (B) and (C) to passenger air bag (inflator) module connector “L28” disconnected at the step 1). With ignition switch ON, is DTC B1015 current?	Go to step 2.	Ignition switch OFF. Replace passenger air bag (inflator) module (Refer to “Passenger Air Bag (Inflator) Module Inspection” in this section).
2	1) With ignition switch OFF, disconnect SDM connector “L21”. 2) Check proper connection to SDM at terminals “L21-24” and “L21-23”. 3) If OK, then measure resistance between “L21-24” and “L21-23” terminals with connected Special Tool (B). Is resistance 2.5 Ω or less?	Substitute a known-good SDM and recheck.	Repair high resistance or open in “BLU/RED” or “YEL/RED” wire circuit.

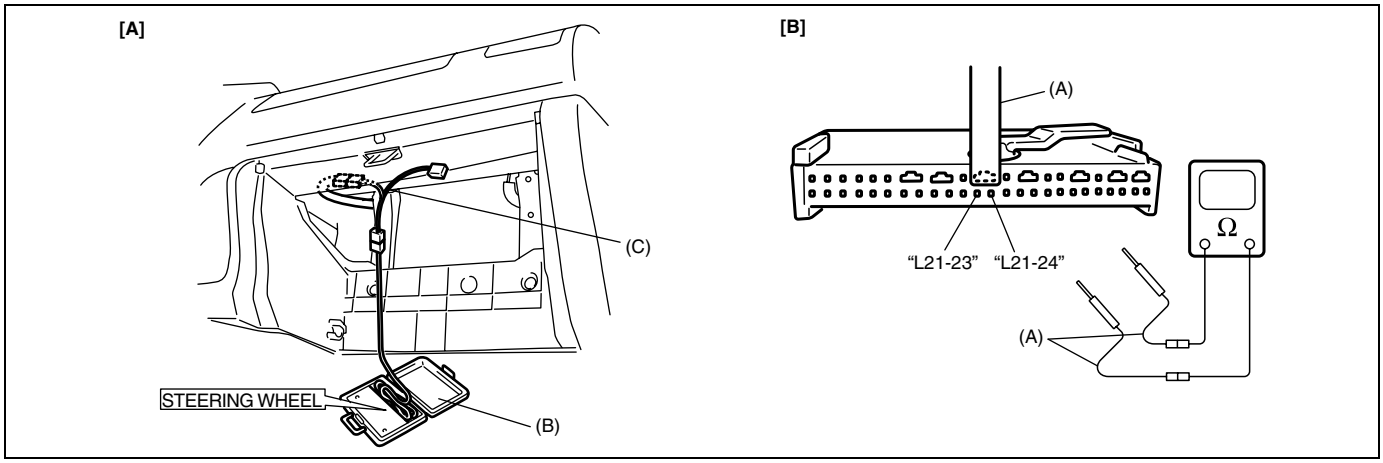

[A]: Fig. for STEP 1 and 2
[B]: Fig. for STEP 2

Special tool
(A): 09932-76010
(B): 09932-75010
(C): 09932-78340

NOTE:

Upon completion of inspection and repair work, perform the following items.

- **Reconnect all air bag system components, ensure all components are properly mounted.**
- **Clear diagnostic trouble codes (Refer to “Diagnostic Trouble Code (DTC) Clearance”), if any.**
- **Repeat “Air Bag Diagnostic System Check” to confirm that the trouble has been corrected.**

DTC B1016:

Step	Action	Yes	No
1	1) With ignition switch OFF, disconnect passenger air bag (inflator) module connector "L28" behind the glove box. 2) Check proper connection to passenger air bag (inflator) module at terminals in "L28" connector. 3) If OK, then connect Special Tool (B) and (C) to passenger air bag (inflator) module connector disconnected at the step 1). With ignition switch ON, is DTC B1016 current?	Go to step 2.	Ignition switch OFF. Replace passenger air bag (inflator) module (Refer to "Passenger Air Bag (Inflator) Module Inspection" in this section).
2	1) With ignition switch OFF, disconnect SDM connector "L21". 2) Check proper connection to SDM at terminals "L21-24" and "L21-23". 3) If OK, then measure resistance between "L21-24" and "L21-23" terminals with connected Special Tool (B). Is resistance 1.9 Ω or more?	Substitute a known-good SDM and recheck.	Repair short from "BLU/RED" wire circuit to "YEL/RED" wire circuit or from "BLU/RED" or "YEL/RED" wire circuit to other wire circuit.

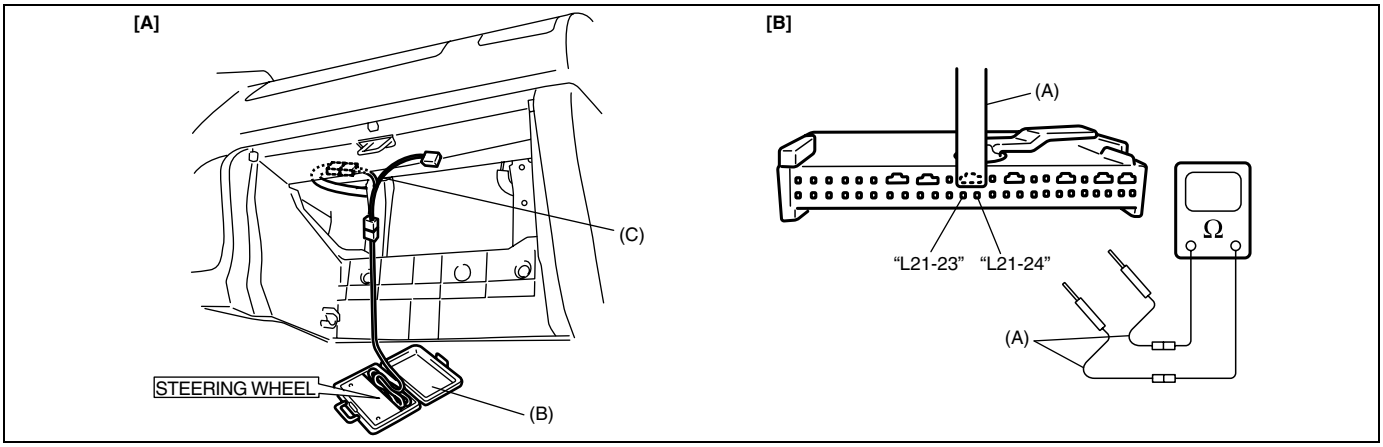

[A]: Fig. for STEP 1 and 2
[B]: Fig. for STEP 2

Special tool
(A): 09932-76010
(B): 09932-75010
(C): 09932-78340

NOTE:

Upon completion of inspection and repair work, perform the following items.

- **Reconnect all air bag system components, ensure all components are properly mounted.**
- **Clear diagnostic trouble codes (Refer to "Diagnostic Trouble Code (DTC) Clearance"), if any.**
- **Repeat "Air Bag Diagnostic System Check" to confirm that the trouble has been corrected.**

DTC B1018:

Step	Action	Yes	No
1	1) With ignition switch OFF, disconnect passenger air bag (inflator) module connector "L28" behind the glove box. 2) Check proper connection to passenger air bag (inflator) module at terminals in "L28" connector. 3) If OK, then connect Special Tool (B) and (C) to passenger air bag (inflator) module connector "L28" disconnected at the step 1). With ignition switch ON, is DTC B1018 current?	Go to step 2.	Ignition switch OFF. Replace passenger air bag (inflator) module (Refer to "Passenger Air Bag (Inflator) Module Inspection" in this section).
2	1) With ignition switch OFF, disconnect Special Tool (B), (C) and SDM connector "L21". 2) Measure resistance between "L21-24" terminal and body ground. Is resistance infinity?	Go to step 3.	Repair short from "BLU/RED" wire circuit to ground.
3	1) Measure resistance between "L21-23" terminal and body ground. Is resistance infinity?	Substitute a known-good SDM and recheck.	Repair short from "YEL/RED" wire circuit to ground.

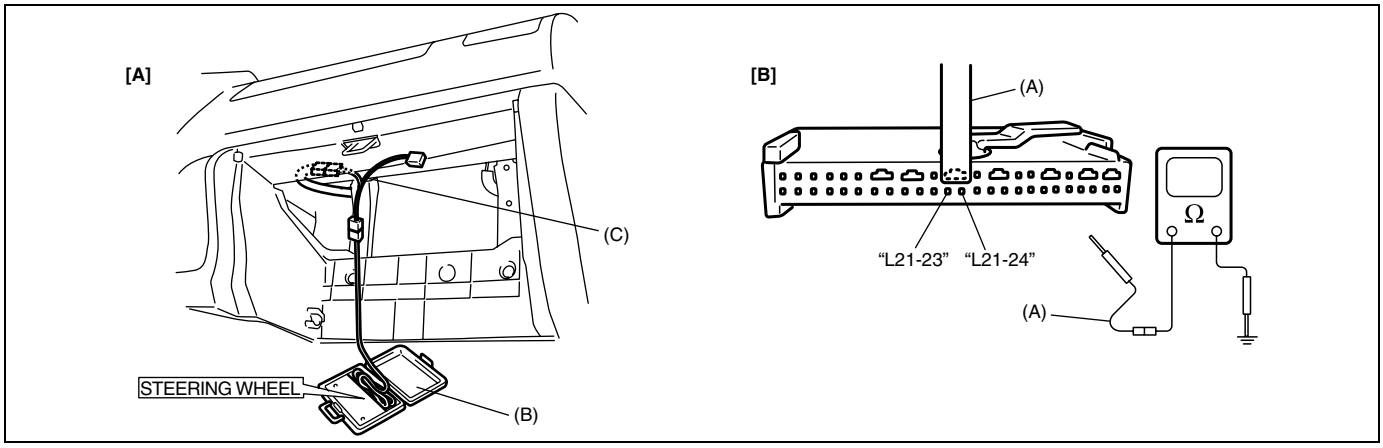

[A]: Fig. for STEP 1, 2 and 3
[B]: Fig. for STEP 2 and 3

Special tool
(A): 09932-76010
(B): 09932-75010
(C): 09932-78340

NOTE:

Upon completion of inspection and repair work, perform the following items.

- **Reconnect all air bag system components, ensure all components are properly mounted.**
- **Clear diagnostic trouble codes (Refer to "Diagnostic Trouble Code (DTC) Clearance"), if any.**
- **Repeat "Air Bag Diagnostic System Check" to confirm that the trouble has been corrected.**

DTC B1019:

Step	Action	Yes	No
1	1) With ignition switch OFF, disconnect passenger air bag (inflator) module connector “L28” behind the glove box. 2) Check proper connection to passenger air bag (inflator) module at terminals in “L28” connector. 3) If OK, then connect Special Tool (B) and (C) to passenger air bag (inflator) module connector “L28” disconnected at the step 1). With ignition switch ON, is DTC B1019 current?	Go to step 2.	Ignition switch OFF. Replace passenger air bag (inflator) module (Refer to “Passenger Air Bag (Inflator) Module Inspection” in this section).
2	1) With ignition switch OFF, disconnect Special Tool (B), (C) and SDM connector “L21”. 2) Measure voltage from “L21-24” terminal to body ground. With ignition switch ON, is voltage 0 – 1 V?	Go to step 3.	Repair short from “BLU/RED” wire circuit to power circuit.
3	1) Measure voltage from “L21-23” terminal to body ground. With ignition switch ON, is voltage 0 – 1 V?	Substitute a known-good SDM and recheck.	Repair short from “YEL/RED” wire circuit to power circuit.

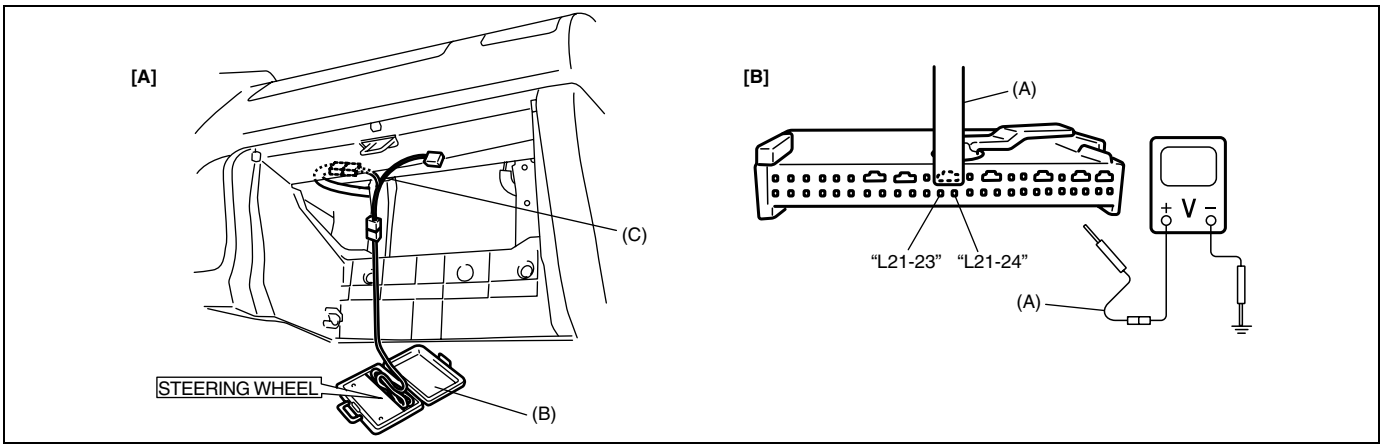

[A]: Fig. for STEP 1, 2 and 3
[B]: Fig. for STEP 2 and 3

Special tool
(A): 09932-76010
(B): 09932-75010
(C): 09932-78340

NOTE:

Upon completion of inspection and repair work, perform the following items.
- **Reconnect all air bag system components, ensure all components are properly mounted.**
- **Clear diagnostic trouble codes (Refer to “Diagnostic Trouble Code (DTC) Clearance”), if any.**
- **Repeat “Air Bag Diagnostic System Check” to confirm that the trouble has been corrected.**

DTC B1021 – Driver Air Bag Initiator Circuit Resistance High
DTC B1022 – Driver Air Bag Initiator Circuit Resistance Low
DTC B1024 – Driver Air Bag Initiator Circuit Short to Ground
DTC B1025 – Driver Air Bag Initiator Circuit Short to Power Circuit

WIRING DIAGRAM

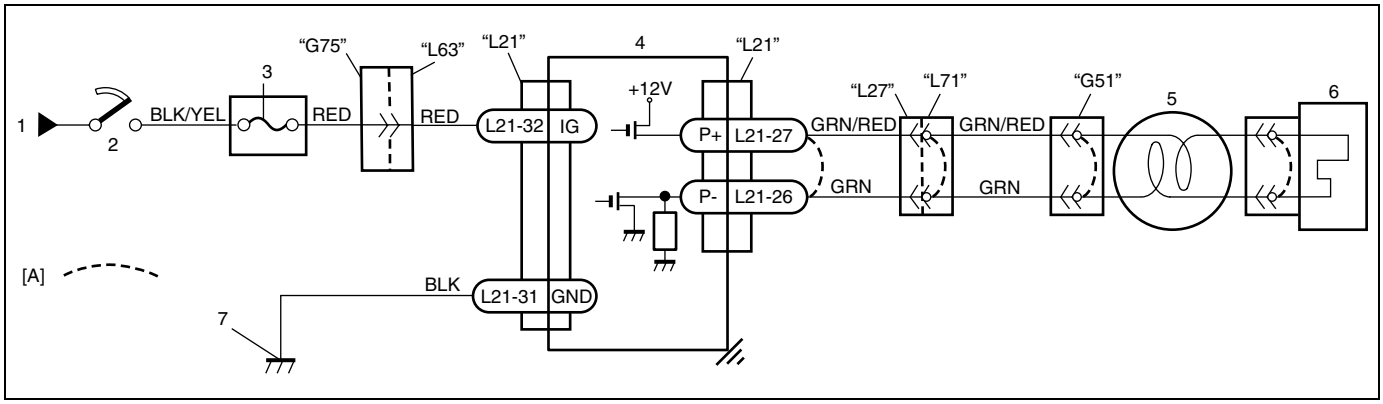

[A]: Shorting bar	3. "AIR BAG" fuse	6. Driver air bag (inflator) module
1. From main fuse	4. SDM	7. Ground for air bag system
2. Ignition switch	5. Contact coil assembly	

CAUTION:

- Be sure to perform "Air Bag Diagnostic System Check" before starting diagnosis according to flow table.
- When measurement of resistance or voltage is required in this table, use a tester along with a correct terminal adapter from special tool (Connector test adapter kit).
- When a check for proper connection is required, refer to "Intermittents and Poor Connections" in this section.
- If there is open circuit in the air bag wire harness, connector or terminal is found damaged, replace the wire harness, connector and terminal as an assembly.

DTC WILL BE SET WHEN

DTC B1021:

The combined resistance of the driver air bag (inflator) module, contact coil assembly, harness wiring and connector terminal contact is above a specified value for specified time.

DTC B1022:

The combined resistance of the driver air bag (inflator) module, contact coil assembly, harness wiring and connector terminal contact is below a specified value for specified time.

DTC B1024:

The voltage measured at driver air bag initiator circuit is below a specified value for specified time.

DTC B1025:

The voltage measured at driver air bag initiator circuit is above a specified value for specified time.

TABLE TEST DESCRIPTION

DTC B1021, B1022, B1024 or B1025:

STEP 1: Check whether malfunction is in contact coil and driver air bag (inflator) module or the others.
STEP 2: Check driver air bag (inflator) module initiator circuit.
STEP 3: Check whether malfunction is in contact coil or driver air bag (inflator) module.

DIAGNOSTIC FLOW TABLE

DTC B1021:

Step	Action	Yes	No
1	1) With ignition switch OFF, disconnect contact coil connector "G51" behind steering wheel. 2) Check proper connection to contact coil at terminals in "G51" connector. 3) If OK, then connect Special Tool (B) and (C) to contact coil connector "G51" disconnected at step 1). With ignition switch ON, is DTC B1021 current?	Go to step 2.	Go to step 3.
2	1) With ignition switch OFF, disconnect SDM connector "L21". 2) Check proper connection to SDM at terminals "L21-27" and "L21-26". 3) If OK, then measure resistance between "L21-27" and "L21-26" terminals with Special Tool (B) connected. Is resistance 3.4 Ω or less?	Substitute a known-good SDM and recheck.	Repair high resistance or open in "GRN/RED" or "GRN" wire circuit.
3	1) With ignition switch OFF, disconnect Special Tool (B) and (C) then reconnect contact coil connector "L71". 2) Remove driver air bag (inflator) module from steering wheel (Refer to "Driver Air Bag (Inflator) Module Removal and Installation" in Section 3C). 3) Check proper connection to driver air bag (inflator) module at terminals in driver air bag (inflator) module connector. 4) If OK, then connect Special Tool (B) and (C) to driver air bag (inflator) module connector. With ignition switch ON, is DTC B1021 current?	Ignition switch OFF. Replace contact coil assembly (Refer to "Contact Coil Cable Assembly Removal and Installation" in Section 3C).	Ignition switch OFF. Replace driver air bag (inflator) module (Refer to "Driver Air Bag (Inflator) Module Removal and Installation" in Section 3C).

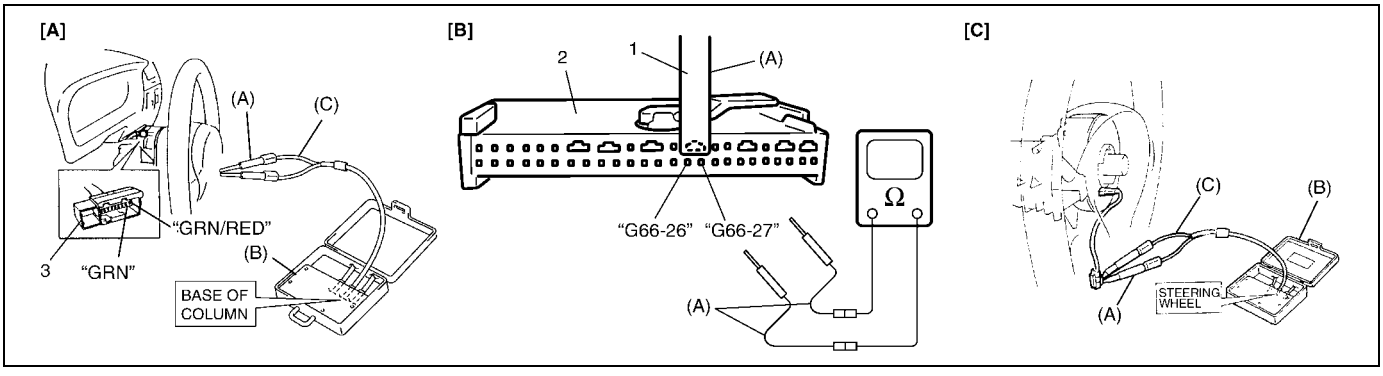

[A]: Fig. for STEP 1 and 2	[B]: Fig. for STEP 2	[C]: Fig. for STEP 3

Special tool
(A): 09932-76010
(B): 09932-75010
(C): 09932-78310

NOTE:

Upon completion of inspection and repair work, perform the following items.

- **Reconnect all air bag system components, ensure all components are properly mounted.**
- **Clear diagnostic trouble codes (Refer to "Diagnostic Trouble Code (DTC) Clearance"), if any.**
- **Repeat "Air Bag Diagnostic System Check" to confirm that the trouble has been corrected.**

DTC B1022:

Step	Action	Yes	No
1	1) With ignition switch OFF, disconnect contact coil connector “L71” located near the base of the steering column. 2) Check proper connection to contact coil at terminals in “L71” connector. 3) If OK, then connect Special Tool (B) and (C) to contact coil connector “L71” disconnected at step 1). With ignition switch ON, is DTC B1022 current?	Go to step 2.	Go to step 3.
2	1) With ignition switch OFF, disconnect SDM connector “L21”. 2) Check proper connection to SDM at terminals “L21-27” and “L21-26”. 3) If OK, then measure resistance between “L21-27” and “L21-26” terminals with Special Tool (B) and (C) connected. Is resistance 2.5 Ω or more?	Substitute a known-good SDM and recheck.	Repair short from “GRN/RED” wire circuit to “GRN” wire circuit or from “GRN/RED” or “GRN” wire circuit to other wire circuit.
3	1) With ignition switch OFF, disconnect Special Tool (B) and (C), then reconnect contact coil connector “L71” located near the base of the steering column. 2) Remove driver air bag (inflator) module from steering wheel (Refer to “Driver Air Bag (Inflator) Module Removal and Installation” in Section 3C). 3) Check proper connection to driver air bag (inflator) module at terminals in driver air bag (inflator) module connector. 4) If OK, then connect Special Tool (B) and (C) to driver air bag (inflator) module connector. With ignition switch ON, is DTC B1022 current?	Ignition switch OFF. Replace contact coil assembly (Refer to “Contact Coil Cable Assembly Removal and Installation” in Section 3C).	Ignition switch OFF. Replace driver air bag (inflator) module (Refer to “Driver Air Bag (Inflator) Module Removal and Installation” in Section 3C).

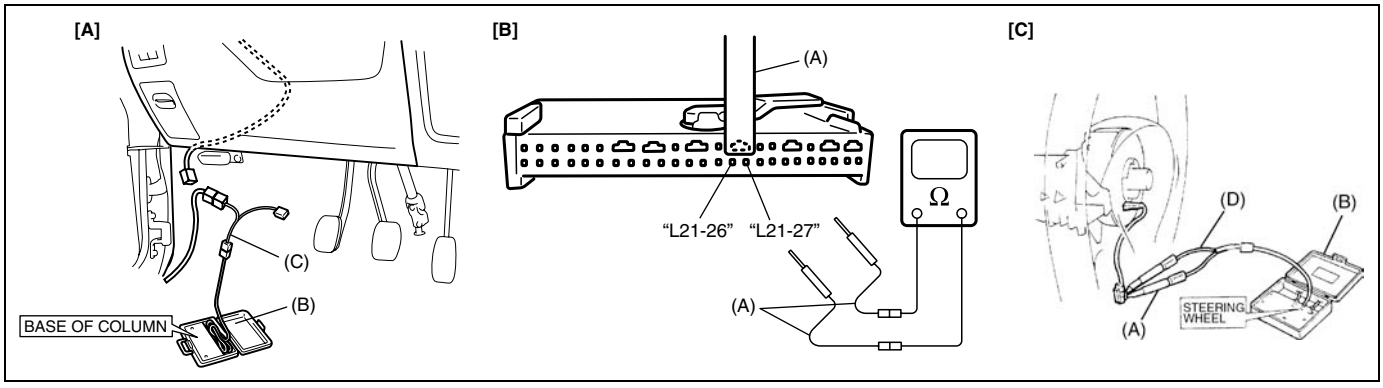

[A]: Fig. for STEP 1 and 2	[B]: Fig. for STEP 2	[C]: Fig. for STEP 3

Special tool
(A): 09932-76010
(B): 09932-75010
(C): 09932-78340
(D): 09932-78310

NOTE:

Upon completion of inspection and repair work, perform the following items.

- **Reconnect all air bag system components, ensure all components are properly mounted.**
- **Clear diagnostic trouble codes (Refer to "Diagnostic Trouble Code (DTC) Clearance"), if any.**
- **Repeat "Air Bag Diagnostic System Check" to confirm that the trouble has been corrected.**

DTC B1024:

Step	Action	Yes	No
1	1) With ignition switch OFF, disconnect contact coil connector "L71" located near the base of the steering column. 2) Check proper connection to contact coil at terminals in "L71" connector. 3) If OK, then connect Special Tool (B) and (C) to contact coil connector "L71" disconnected at step 1). With ignition switch ON, is DTC B1024 current?	Go to step 2.	Go to step 3.
2	1) With ignition switch OFF, disconnect Special Tool (B), (C) and SDM connector "L21". 2) Measure resistance between "L21-27" terminal and body ground and between "L21-26" terminal and body ground. Are they infinity?	Substitute a known-good SDM and recheck.	Repair short from "GRN/RED" or "GRN" wire circuit to ground.
3	1) With ignition switch OFF, disconnect Special Tool (B) and (C), then reconnect contact coil connector "L71"located near the base of the steering column. 2) Remove driver air bag (inflator) module from steering wheel (Refer to "Driver Air Bag (Inflator) Module Removal and Installation" in Section 3C). 3) Check proper connection to driver air bag (inflator) module at terminals in driver air bag (inflator) module connector. 4) If OK, then connect Special Tool (B) and (C) to driver air bag (inflator) module connector. With ignition switch ON, is DTC B1024 current?	Ignition switch OFF. Replace contact coil assembly (Refer to "Contact Coil Cable Assembly Removal and Installation" in Section 3C).	Ignition switch OFF. Replace driver air bag (inflator) module (Refer to "Driver Air Bag (Inflator) Module Removal and Installation" in Section 3C).

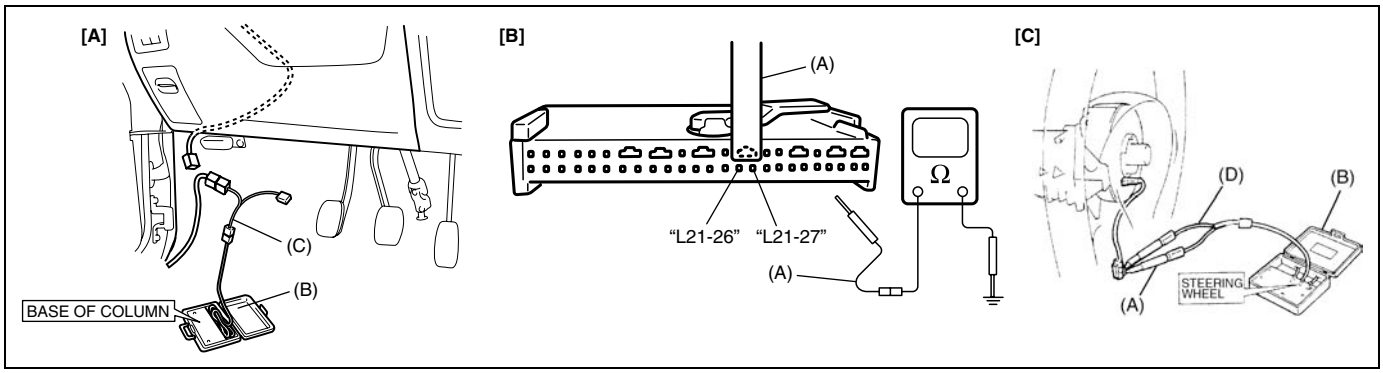

[A]: Fig. for STEP 1 and 2	[B]: Fig. for STEP 2	[C]: Fig. for STEP 3

Special tool
(A): 09932-76010
(B): 09932-75010
(C): 09932-78340
(D): 09932-78310

NOTE:

Upon completion of inspection and repair work, perform the following items.
- **Reconnect all air bag system components, ensure all components are properly mounted.**
- **Clear diagnostic trouble codes (Refer to "Diagnostic Trouble Code (DTC) Clearance"), if any.**
- **Repeat "Air Bag Diagnostic System Check" to confirm that the trouble has been corrected.**

DTC B1025:

Step	Action	Yes	No
1	1) With ignition switch OFF, disconnect contact coil connector "L71" located near the base of the steering column. 2) Check proper connection to contact coil at terminals in "L71" connector. 3) If OK, then connect Special Tool (B) and (C) to contact coil connector "L71" disconnected at step 1). With ignition switch ON, is DTC B1025 current?	Go to step 2.	Go to step 3.
2	1) With ignition switch OFF, disconnect Special Tool (B), (C) and SDM connector "L21". 2) Measure voltage from "L21-27" terminal to body ground and from "L21-26" terminal to body ground. With ignition switch ON, are they 0 – 1V?	Substitute a known-good SDM and recheck.	Repair short from "GRN/RED" or "GRN" wire circuit to power circuit.

Step	Action	Yes	No
3	1) With ignition switch OFF, disconnect Special Tool (B) and (C), then reconnect contact coil connector "L71" located near the base of the steering column. 2) Remove driver air bag (inflator) module from steering wheel (Refer to "Driver Air Bag (Inflator) Module Removal and Installation" in Section 3C). 3) Check proper connection to driver air bag (inflator) module at terminals in driver air bag (inflator) module connector. 4) If OK, then connect Special Tool (B) and (C) to driver air bag (inflator) module connector. With ignition switch ON, is DTC B1025 current?	Ignition switch OFF. Replace contact coil assembly (Refer to "Contact Coil Cable Assembly Removal and Installation" in Section 3C).	Ignition switch OFF. Replace driver air bag (inflator) module (Refer to "Driver Air Bag (Inflator) Module Removal and Installation" in Section 3C).

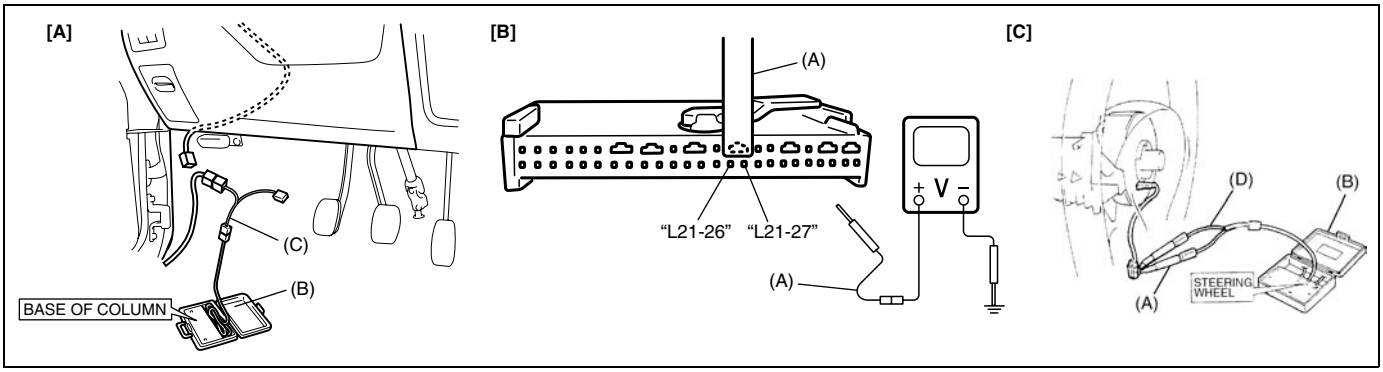

[A]: Fig. for STEP 1 and 2	[B]: Fig. for STEP 2	[C]: Fig. for STEP 3

Special tool
(A): 09932-76010
(B): 09932-75010
(C): 09932-78340
(D): 09932-78310

NOTE:

Upon completion of inspection and repair work, perform the following items.

- **Reconnect all air bag system components, ensure all components are properly mounted.**
- **Clear diagnostic trouble codes (Refer to "Diagnostic Trouble Code (DTC) Clearance"), if any.**
- **Repeat "Air Bag Diagnostic System Check" to confirm that the trouble has been corrected.**

DTC B1031 – Power Source Voltage High
DTC B1032 – Power Source Voltage Low

WIRING DIAGRAM

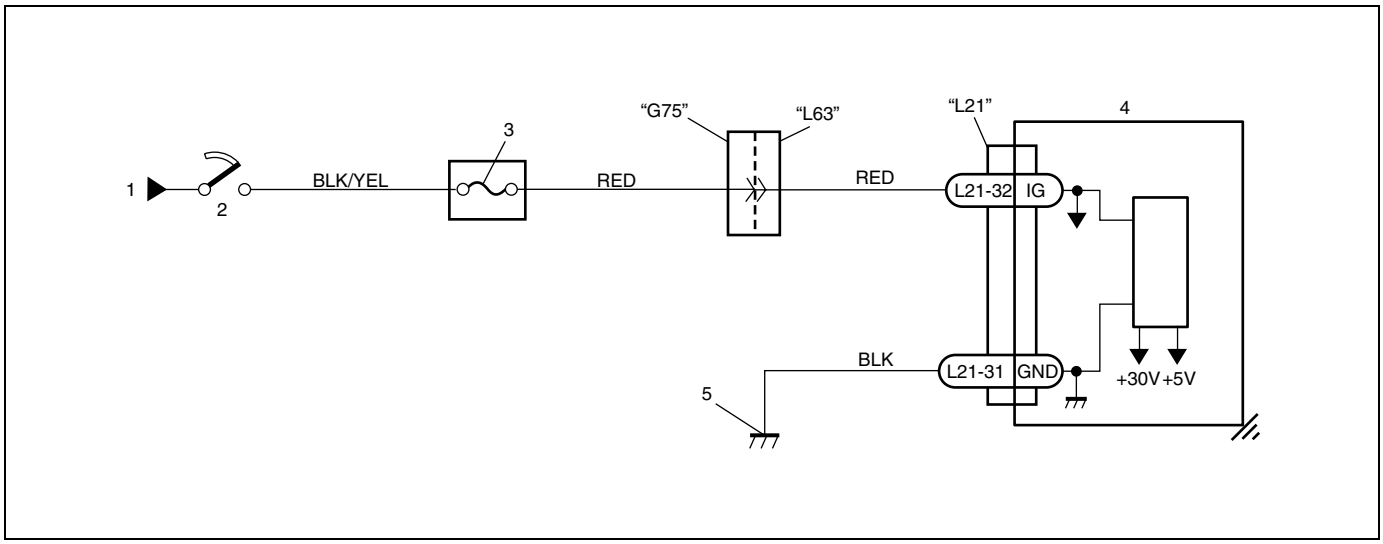

1. From main fuse	3. "AIR BAG" fuse	5. Ground for air bag system
2. Ignition switch	4. SDM	

CAUTION:

- **Be sure to perform "Air Bag Diagnostic System Check" before starting diagnosis according to flow table.**
- **When measurement of resistance or voltage is required in this table, use a tester along with a correct terminal adapter from special tool (Connector test adapter kit).**
- **When a check for proper connection is required, refer to "Intermittents and Poor Connections" in this section.**
- **If there is open circuit in the air bag wire harness, connector or terminal is found damaged, replace the wire harness, connector and terminal as an assembly.**

DTC WILL BE SET WHEN

DTC B1031:

The power source voltage to SDM is above specified value for specified time.

DTC B1032:

The power source voltage is below an approx. 8V for specified time.

TABLE TEST DESCRIPTION

DTC B1031:

STEP 1: Check if voltage applied to SDM is within normal range.
STEP 2: Check if DTC B1031 still exists.

DTC B1032:

STEP 1: Check if voltage on battery is within normal range.
STEP 2: Check if voltage applied to SDM is within normal range.
STEP 3: Check if voltage applied to "G75" connector is within normal range.
STEP 4: Check if DTC B1032 still exists.

DIAGNOSTIC FLOW TABLE

DTC B1031:

Step	Action	Yes	No
1	1) With ignition switch OFF, disconnect SDM connector “L21” 2) Check proper connection to SDM at “L21-32” terminal. 3) If OK, then ignition switch ON, and then check voltage from “L21-32” terminal in SDM connector “L21” to body ground. Is voltage 14 V or less?	Go to step 2.	Check charging system referring to “Overcharged battery” in Section 6H.
2	1) With ignition switch OFF, reconnect SDM connector “L21”. With ignition switch ON, is DTC B1031 current?	Substitute a known-good SDM and recheck.	Intermittent trouble. Check for intermittent referring to “Intermittents and Poor Connections” in this section.

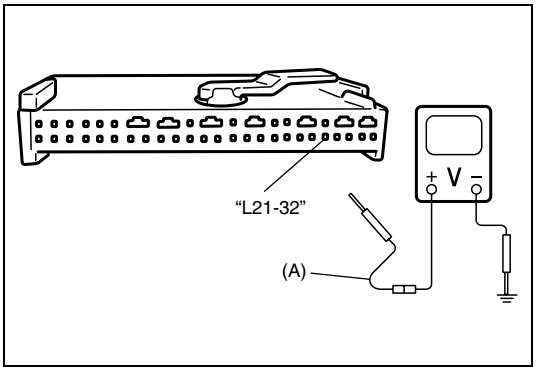

Special tool
(A): 09932-76010

NOTE:

Upon completion of inspection and repair work, perform the following items.

- **Reconnect all air bag system components, ensure all components are properly mounted.**
- **Clear diagnostic trouble codes (Refer to “Diagnostic Trouble Code (DTC) Clearance”), if any.**
- **Repeat “Air Bag Diagnostic System Check” to confirm that the trouble has been corrected.**

DTC B1032:

Step	Action	Yes	No
1	1) Measure voltage on battery. Is voltage 11 V or more?	Go to Step 2.	Check charging system referring to “Under-charged battery in Section 6H.
2	1) With ignition switch OFF, disconnect SDM connector “L21”. 2) Check proper connection to SDM at “L21-32” terminal. 3) If OK, then ignition switch ON, and then check voltage from “L21-32” terminal in SDM connector to body ground. Is voltage 8 V or more?	Go to Step 4.	Go to Step 3.

Step	Action	Yes	No
3	1) With ignition switch OFF, disconnect “G75” connector in instrument panel harness. 2) Check proper connection at “G75-3” (“RED” wire) terminal. 3) If OK, then ignition switch ON, and then check voltage from “G75-3” (“RED” wire) terminal to body ground. Is voltage 8 V or more?	Check for proper connection at “L63-3” terminal. If OK, repair high resistance or open in “RED” wire (between “L63” connector and SDM).	Possibly faulty points are as follows. Check each of them and repair as necessary. • Circuit from battery to “G75” connector • Charging System (Refer to “Undercharged battery” in Section 6H.)
4	1) With ignition switch OFF, reconnect SDM connector “L21”. With ignition switch ON, is DTC B1032 current?	Substitute a known-good SDM and recheck.	Intermittent trouble check for intermittent referring to “Intermittents and Poor Connections” in this section.

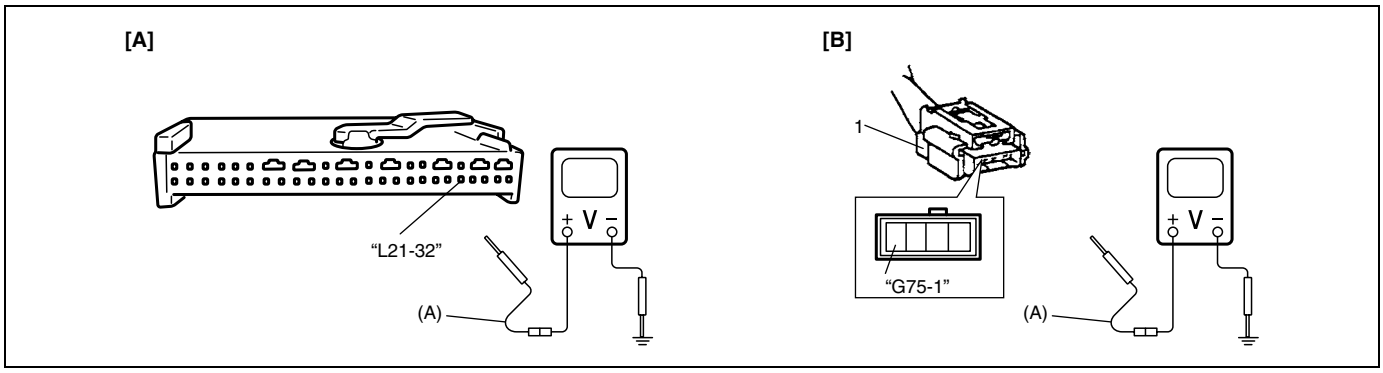

[A]: Fig. for STEP 2
[B]: Fig. for STEP 3
1. Instrument panel harness side connector

Special tool
(A): 09932-76010

NOTE:

Upon completion of inspection and repair work, perform the following items.

- **Reconnect all air bag system components, ensure all components are properly mounted.**
- **Clear diagnostic trouble codes (Refer to “Diagnostic Trouble Code (DTC) Clearance”), if any.**
- **Repeat “Air Bag Diagnostic System Check” to confirm that the trouble has been corrected.**

DTC B1041 – Driver Pretensioner Initiator Circuit Resistance High
DTC B1042 – Driver Pretensioner Initiator Circuit Resistance Low
DTC B1043 – Driver Pretensioner Initiator Circuit Short to Ground
DTC B1044 – Driver Pretensioner Initiator Circuit Short to Power Circuit
DTC B1045 – Passenger Pretensioner Initiator Circuit Resistance High
DTC B1046 – Passenger Pretensioner Initiator Circuit Resistance Low
DTC B1047 – Passenger Pretensioner Initiator Circuit Short to Ground
DTC B1048 – Passenger Pretensioner Initiator Circuit Short to Power Circuit

WIRING DIAGRAM

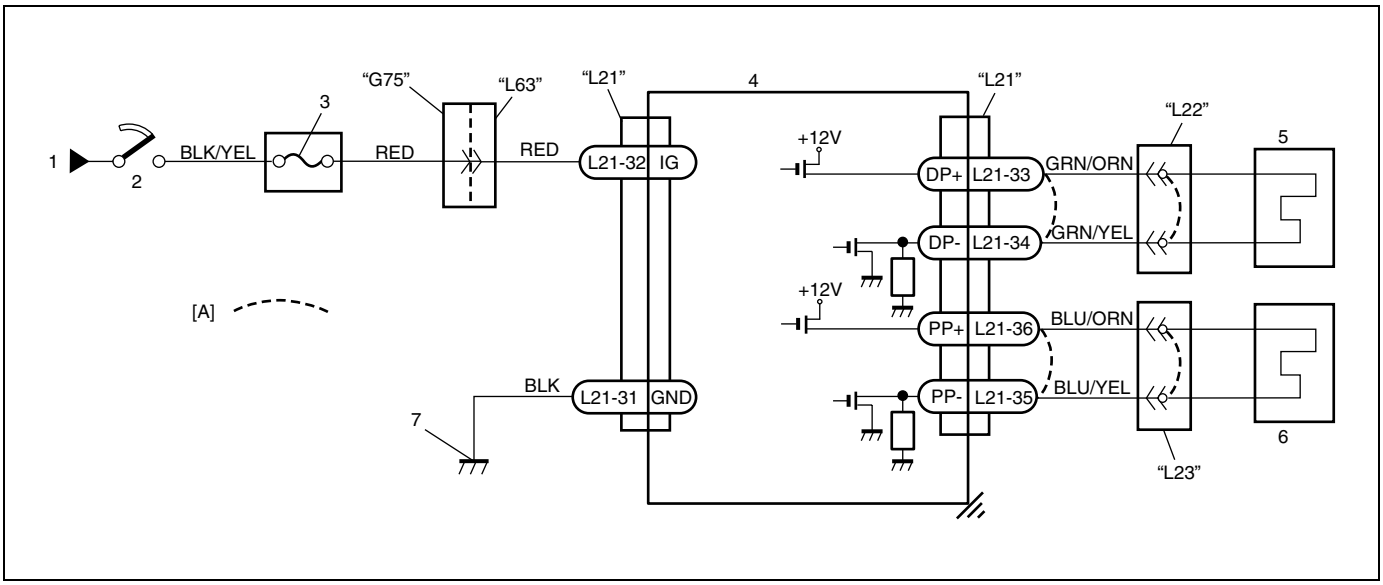

[A]: Shorting bar	3. "AIR BAG" fuse	6. Passenger seat belt pretensioner
1. From main fuse	4. SDM	7. Ground for air bag system
2. Ignition switch	5. Driver seat belt pretensioner	

CAUTION:

- **Be sure to perform "Air Bag Diagnostic System Check" before starting diagnosis according to flow table.**
- **When measurement of resistance or voltage is required in this table, use a tester along with a correct terminal adapter from special tool (Connector test adapter kit).**
- **When a check for proper connection is required, refer to "Intermittents and Poor Connections" in this section.**
- **If there is open circuit in the air bag wire harness, connector or terminal is found damaged, replace the wire harness, connector and terminal as an assembly.**

DTC WILL BE SET WHEN

DTC B1041 or B1045:

The resistance of driver or passenger seat belt pretensioner initiator circuit is above a specified value for specified time.

DTC B1042 or B1046:

The resistance of driver or passenger seat belt pretensioner initiator circuit is below a specified value for specified time.

DTC B1043 or B1047:

The voltage measured at driver or passenger seat belt pretensioner initiator circuit is below a specified value for specified time.

DTC B1044 or B1048:

The voltage measured at driver or passenger seat belt pretensioner initiator circuit is above a specified value for specified time.

TABLE TEST DESCRIPTION

DTC B1041, B1042, B1043, B1044, B1045, B1046, B1047 or B1048:

STEP 1: Check whether malfunction is in seat belt pretensioner.

STEP 2: Check seat belt pretensioner initiator circuit in air bag harness.

DIAGNOSTIC FLOW TABLE

DTC B1041 or B1045:

Step	Action	Yes	No
1	1) With ignition switch OFF, remove center pillar inner garnish of applicable side then disconnect seat belt pretensioner connector. 2) Check proper connection to applicable seat belt pretensioner at terminals in “L22” or “L23” connector. 3) If OK, then connect Special Tool (A), (B) and (C) to seat belt pretensioner connector disconnected at the step 1. With ignition switch ON, is DTC B1041 or B1045 still current?	Go to step 2.	Ignition switch OFF. Replace seat belt pretensioner (Refer to 10).
2	1) With ignition switch OFF, disconnect SDM connector “L21”. 2) Check proper connection to SDM at terminals “L21-33” and “L21-34” or “L21-36” and “L21-35”. 3) If OK, then measure resistance with connected Special Tool (A), (B) and (C). • DTC B1041: between “L21-33” and “L21-34” terminals. • DTC B1045: between “L21-36” and “L21-35” terminals. Is resistance 2.6 Ω or less?	Substitute a known-good SDM and recheck.	DTC B1041: Repair high resistance or open in “GRN/ORN” or “GRN/YEL” wire circuit. DTC B1045: Repair high resistance or open in “BLU/ORN” or “BLU/YEL” wire circuit.

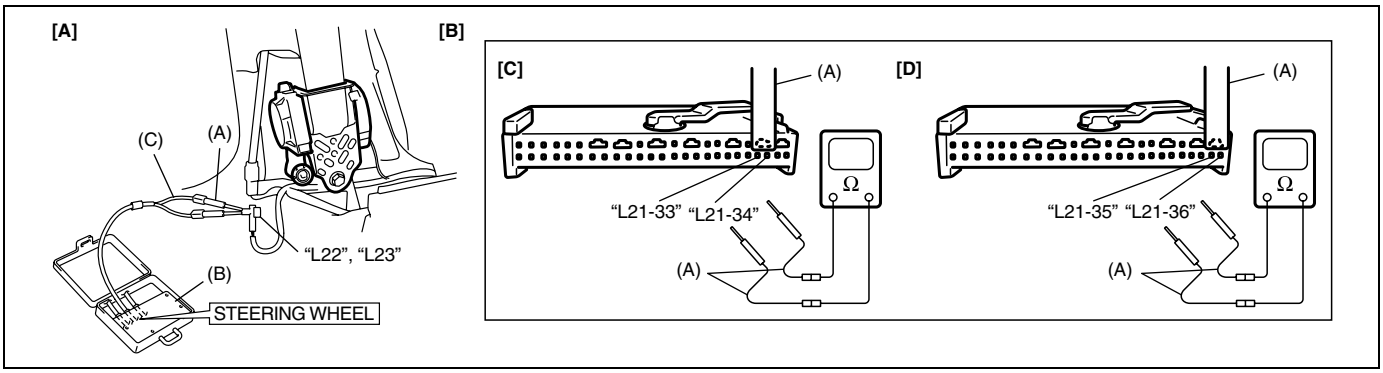

[A]: Fig. for STEP 1 and 2
[B]: Fig. for STEP 2
[C]: For DTC B1041
[D]: For DTC B1045

Special tool
(A): 09932-76010
(B): 09932-75010
(C): 09932-78310

NOTE:

Upon completion of inspection and repair work, perform the following items.
- **Reconnect all air bag system components, ensure all components are properly mounted.**
- **Clear diagnostic trouble codes (Refer to "Diagnostic Trouble Code (DTC) Clearance"), if any.**
- **Repeat "Air Bag Diagnostic System Check" to confirm that the trouble has been corrected.**

DTC B1042 or B1046:

Step	Action	Yes	No
1	1) With ignition switch OFF, remove center pillar inner garnish of applicable side then disconnect seat belt pretensioner connector. 2) Check proper connection to applicable seat belt pretensioner at terminals in "L22" or "L23" connector. 3) If OK, then connect Special Tool (A), (B) and (C) to seat belt pretensioner connector disconnected at the step 1. With ignition switch ON, is DTC B1042 or B1046 still current?	Go to step 2.	Ignition switch OFF. Replace seat belt pretensioner (Refer to 10).

Step	Action	Yes	No
2	1) With ignition switch OFF, disconnect SDM connector “L21”. 2) Check proper connection to SDM at terminals “L21-33” and “L21-34” or “L21-36” and “L21-35”. 3) If OK, then measure resistance with connected Special Tool (B). • DTC B1042: between “L21-33” and “L21-34” terminals. • DTC B1046: between “L21-36” and “L21-35” terminals. Is resistance 1.8 Ω or more?	Substitute a known-good SDM and recheck.	DTC B1042: Repair short from “GRN/ORN” wire circuit to “GRN/YEL” wire circuit, or from “GRN/ORN” or “GRN/YEL” wire circuit to other wire circuit. DTC B1046: Repair short from “BLU/ORN” wire circuit to “BLU/YEL” wire circuit, or from “BLU/ORN” or “BLU/YEL” wire circuit to other wire circuit.

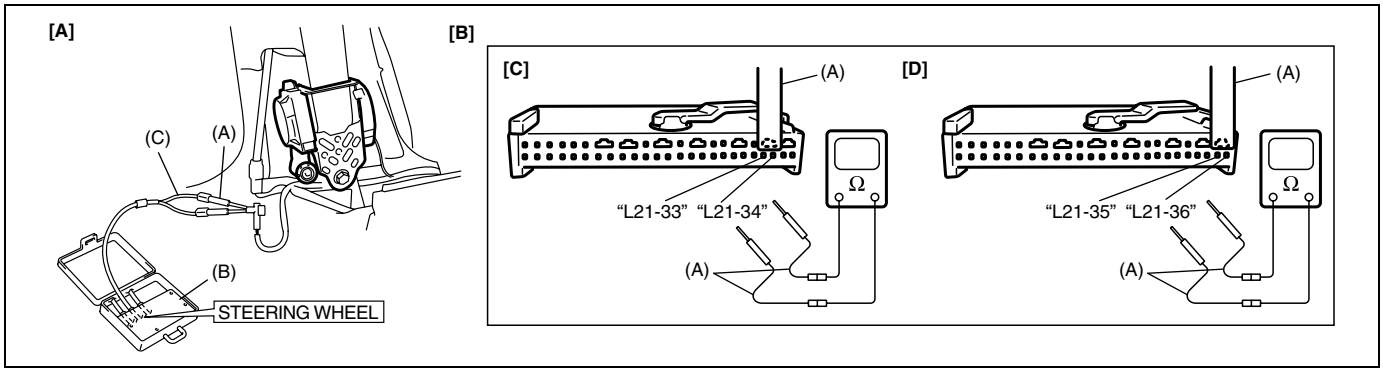

[A]: Fig. for STEP 1 and 2
[B]: Fig. for STEP 2
[C]: For DTC B1042
[D]: For DTC B1046

Special tool
(A): 09932-76010
(B): 09932-75010
(C): 09932-78310

NOTE:

Upon completion of inspection and repair work, perform the following items.
- **Reconnect all air bag system components, ensure all components are properly mounted.**
- **Clear diagnostic trouble codes (Refer to “Diagnostic Trouble Code (DTC) Clearance”), if any.**
- **Repeat “Air Bag Diagnostic System Check” to confirm that the trouble has been corrected.**

DTC B1043 or B1047:

Step	Action	Yes	No
1	1) With ignition switch OFF, remove center pillar inner garnish of applicable side then disconnect seat belt pretensioner connector. 2) Check proper connection to applicable seat belt pretensioner at terminals in “L22” or “L23” connector. 3) If OK, then connect Special Tool (A), (B) and (C) to seat belt pretensioner connector disconnected at the step 1. With ignition switch ON, is DTC B1043 or B1047 still current?	Go to step 2.	Ignition switch OFF. Replace seat belt pretensioner (Refer to 10).
2	1) With ignition switch OFF, disconnect Special Tool (A), (B) and (C) and SDM connector “L21”. 2) Measure resistance. • DTC B1043: between “L21-33” terminal and body ground, and between “L21-34” terminal and body ground. • DTC B1047: between “L21-36” terminal and body ground, and between “L21-35” terminal and body ground. Is resistance infinity?	Substitute a known-good SDM and recheck.	DTC B1043: Repair short “GRN/ORN” or “GRN/YEL” wire circuit to ground. DTC B1047: Repair short from “BLU/ORN” or “BLU/YEL” wire circuit to ground.

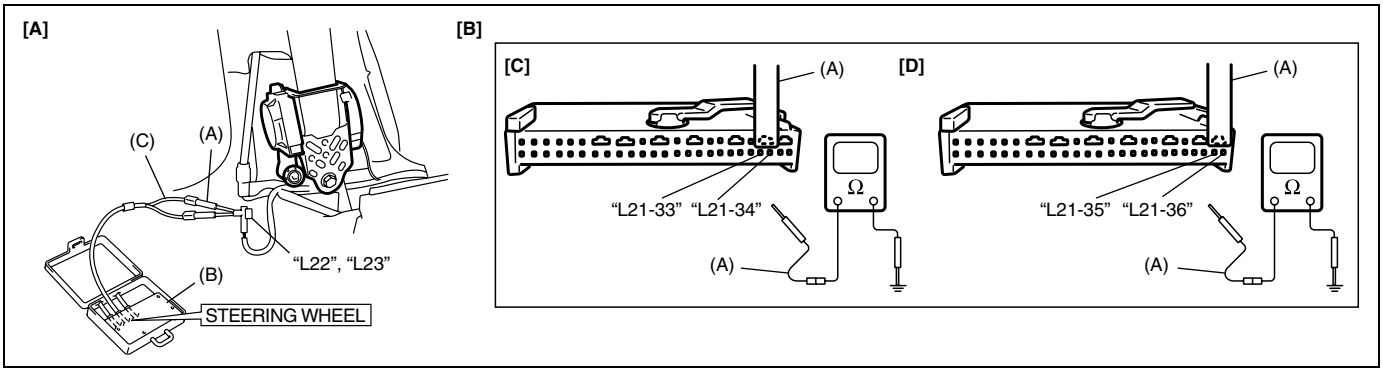

[A]: Fig. for STEP 1 and 2
[B]: Fig. for STEP 2
[C]: For DTC B1043
[D]: For DTC B1047

Special tool
(A): 09932-76010
(B): 09932-75010
(C): 09932-78310

NOTE:

Upon completion of inspection and repair work, perform the following items.

- **Reconnect all air bag system components, ensure all components are properly mounted.**
- **Clear diagnostic trouble codes (Refer to “Diagnostic Trouble Code (DTC) Clearance”), if any.**
- **Repeat “Air Bag Diagnostic System Check” to confirm that the trouble has been corrected.**

DTC B1044 or B1048:

Step	Action	Yes	No
1	1) With ignition switch OFF, remove center pillar inner garnish of applicable side then disconnect seat belt pretensioner connector. 2) Check proper connection to applicable seat belt pretensioner at terminals in "L22" or "L23" connector. 3) If OK, then connect Special Tool (A), (B) and (C) to seat belt pretensioner connector disconnected at the step 1. With ignition switch ON, is DTC B1044 or B1048 still current?	Go to step 2.	Ignition switch OFF. Replace seat belt pretensioner (Refer to 10).
2	1) With ignition switch OFF, disconnect Special Tool (A), (B) and (C) and SDM connector "L21". 2) Measure voltage. • DTC B1044: between "L21-33" terminal and body ground, and between "L21-34" terminal and body ground. • DTC B1048: between "L21-36" terminal and body ground, and between "L21-35" terminal and body ground. With ignition switch ON, is voltage 0 – 1 V?	Substitute a known-good SDM and recheck.	DTC B1044: Repair short "GRN/ORN" or "GRN/YEL" wire circuit to power circuit. DTC B1048: Repair short from "BLU/ORN" or "BLU/YEL" wire circuit to power circuit.

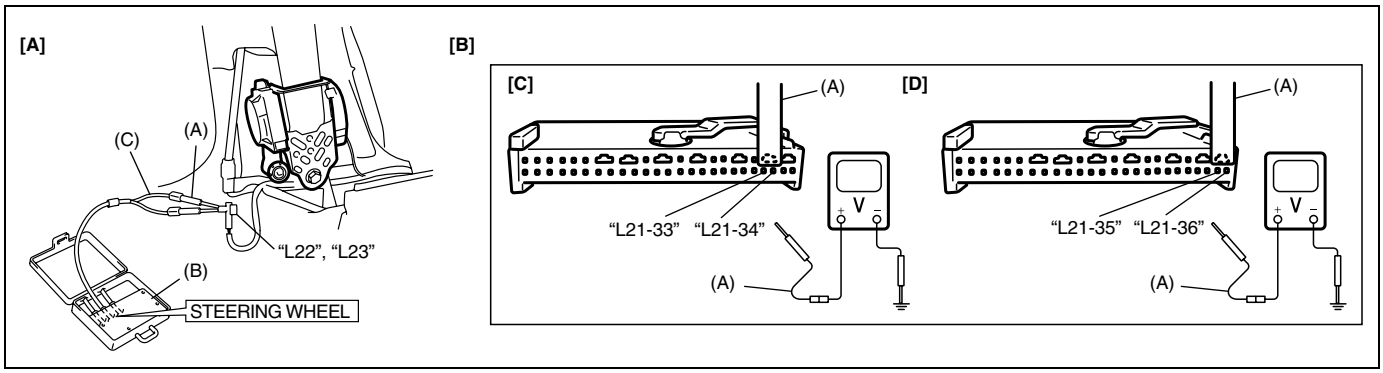

[A]: Fig. for STEP 1 and 2
[B]: Fig. for STEP 2
[C]: For DTC B1044
[D]: For DTC B1048

Special tool
(A): 09932-76010
(B): 09932-75010
(C): 09932-78310

NOTE:

Upon completion of inspection and repair work, perform the following items.

- **Reconnect all air bag system components, ensure all components are properly mounted.**
- **Clear diagnostic trouble codes (Refer to "Diagnostic Trouble Code (DTC) Clearance"), if any.**
- **Repeat "Air Bag Diagnostic System Check" to confirm that the trouble has been corrected.**

DTC B1051 – Frontal Crash Detected (System Activation Command Outputted)

DTC WILL BE SET WHEN

The SDM detects a frontal crash of sufficient force to warrant activation of the air bag system. (SDM outputs a deployment command.)

TABLE TEST DESCRIPTION

STEP 1: Check that DTC B1051 has been set although air bag has not been deployed.
STEP 2: Check that DTC has been set due to failure of SDM.

NOTE:

Before executing items in this table, be sure to perform "Air Bag Diagnostic System Check".

DIAGNOSTIC FLOW TABLE

Step	Action	Yes	No
1	1) Ignition switch OFF. Has air bag system deployed?	Replace components and perform inspections as directed in "Repairs and Inspections Required After an Accident".	Go to step 2.
2	1) Inspect front of vehicle and undercarriage for signs of impact. Are there signs of impact?	Replace components and perform inspections as directed in "Repairs and Inspections Required After an Accident".	Substitute a known-good SDM and recheck.

NOTE:

- **DTC B1051 can never be cleared once it has been set.**
- **Upon completion of inspection and repair work, perform the following items.**
  - **Reconnect all air bag system components, ensure all components are properly mounted.**
  - **Repeat "Air Bag Diagnostic System Check" to confirm that the trouble has been corrected.**

DTC B1056 – Sideward Crash (Driver Side) Detected (Side Air Bag System Activation Command Outputted)
DTC B1057 – Sideward Crash (Passenger Side) Detected (Side Air Bag System Activation Command Outputted)

DTC WILL BE SET WHEN

DTC B1056 or B1057:

The SDM detects a sideward crash (driver or passenger side) of sufficient force to warrant activation of the side air bag system (driver or passenger side). (SDM outputs a deployment command.)

TABLE TEST DESCRIPTION

DTC B1056 or B1057:

STEP 1: Check that DTC B1056 or B1057 has been set although side air bag (driver or passenger side) has not been deployed.
STEP 2: Check that DTC has been set due to failure of SDM.

NOTE:

Before executing items in this table, be sure to perform "Air Bag Diagnostic System Check".

DIAGNOSTIC FLOW TABLE

DTC B1056 or B1057:

Step	Action	Yes	No
1	1) Ignition switch OFF. Has side air bag deployed?	Replace components and perform inspections as directed in "Repairs and Inspections Required After an Accident".	Go to step 2.
2	1) Inspect sideward of vehicle and undercarriage for signs of impact. Are there signs of impact?	Replace components and perform inspections as directed in "Repairs and Inspections Required After an Accident".	Substitute a known-good SDM and recheck.

NOTE:

Upon completion of inspection and repair work, perform the following items.

- **Reconnect all air bag system components, ensure all components are properly mounted.**
- **Clear diagnostic trouble codes (Refer to "Diagnostic Trouble Code (DTC) Clearance"), if any.**
- **Repeat "Air Bag Diagnostic System Check" to confirm that the trouble has been corrected.**

DTC B1058 – Frontal Crash Detected (Pretensioner Activation Command Outputted)

DTC WILL BE SET WHEN

The SDM detects a frontal crash of sufficient force to warrant activation of pretensioner. (SDM outputs a activation command.)

TABLE TEST DESCRIPTION

STEP 1: Check that DTC B1058 has been set although pretensioner has not been activated.
STEP 2: Check that DTC has been set due to failure of SDM.

NOTE:

Before executing items in this table, be sure to perform "Air Bag Diagnostic System Check".

DIAGNOSTIC FLOW TABLE

Step	Action	Yes	No
1	1) Ignition switch OFF. Has pretensioner activated?	Replace components and perform inspections as directed in "Repairs and Inspections Required After an Accident".	Go to step 2.
2	1) Inspect front of vehicle and undercarriage for signs of impact. Are there signs of impact?	Replace components and perform inspections as directed in "Repairs and Inspections Required After an Accident".	Substitute a known-good SDM and recheck.

NOTE:

- **DTC B1058 can never be cleared once it has been set.**
- **Upon completion of inspection and repair work, perform the following items.**
  - **Reconnect all air bag system components, ensure all components are properly mounted.**
  - **Repeat "Air Bag Diagnostic System Check" to confirm that the trouble has been corrected.**

DTC B1061 – "AIR BAG" Warning Lamp Circuit Failure

WIRING DIAGRAM

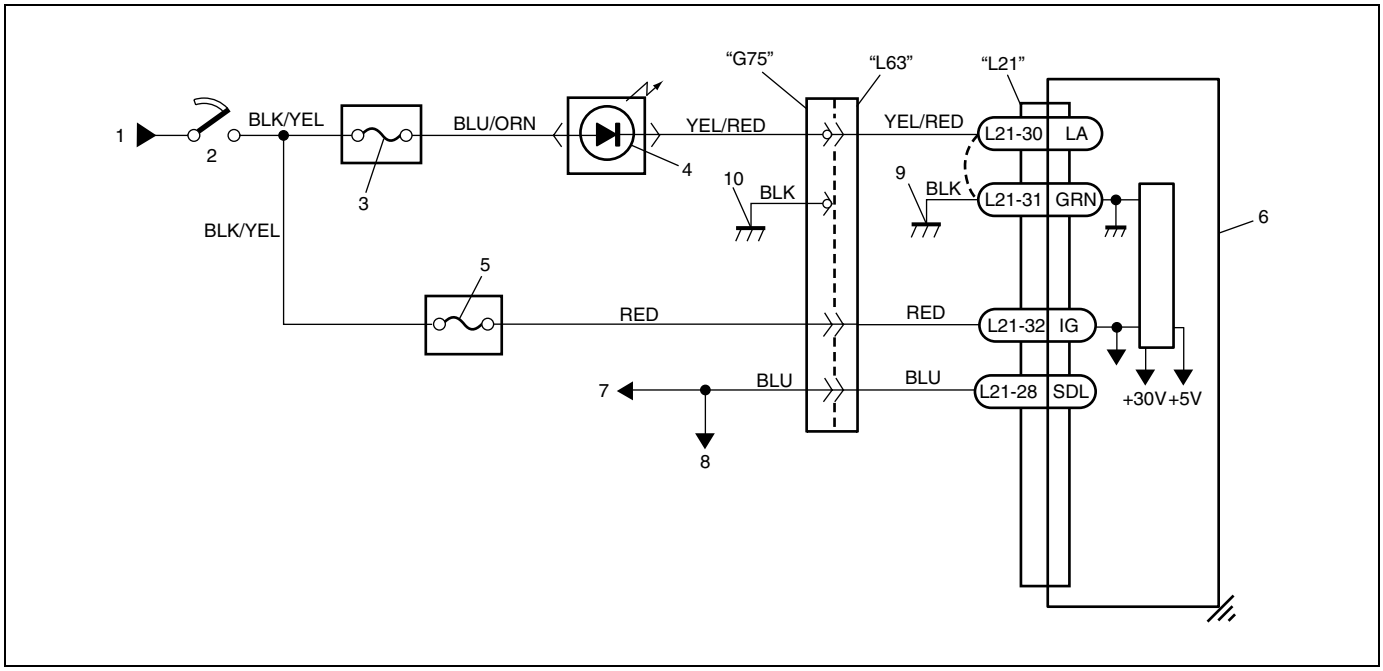

1. From main fuse	5. "AIR BAG" fuse	9. Ground for air bag system
2. Ignition switch	6. SDM	10. Ground on body
3. "METER" fuse	7. To DLC	
4. "AIR BAG" warning lamp in combination meter	8. To ECM and ABS control module (if equipped)	

CAUTION:

- **Be sure to perform "Air Bag Diagnostic System Check" before starting diagnosis according to flow table.**
- **When measurement of resistance or voltage is required in this table, use a tester along with a correct terminal adapter from special tool (Connector test adapter kit).**
- **When a check for proper connection is required, refer to "Intermittents and Poor Connections" in this section.**
- **If there is open circuit in the air bag wire harness, connector or terminal is found damaged, replace the wire harness, connector and terminal as an assembly.**

DTC WILL BE SET WHEN

The voltage at the "AIR BAG" warning lamp circuit terminal "L21-30" does not match the commanded state of the warning lamp driver for specified time.

TABLE TEST DESCRIPTION

STEP 1: This test rechecks "AIR BAG" warning lamp operation.
STEP 2: This test rechecks whether an abnormality is in SDM.

DIAGNOSTIC FLOW TABLE

Step	Action	Yes	No
1	1) This DTC is set when there is a trouble in "AIR BAG" warning lamp circuit. Failure to properly perform "Air Bag Diagnostic System Check" may also result in misdiagnosis. Therefore, check "AIR BAG" warning lamp circuit again according to "Air Bag Diagnostic System Check". Is "AIR BAG" warning lamp circuit in good condition?	Go to step 2.	Repair "AIR BAG" warning lamp circuit.
2	1) Clear DTC (Refer to "Diagnostic Trouble Code (DTC) Clearance"). 2) Check DTC (Refer to "Diagnostic Trouble Code (DTC) Check"). Is DTC B1061 set?	Substitute a known-good SDM and recheck.	Recheck air bag system. Refer to "Air Bag Diagnostic System Check".

NOTE:

Upon completion of inspection and repair work, perform following items.

- **Reconnect all air bag system components, ensure all components are properly mounted.**
- **Clear diagnostic trouble codes (Refer to "Diagnostic Trouble Code (DTC) Clearance"), if any.**
- **Repeat "Air Bag Diagnostic System Check" to confirm that the trouble has been corrected.**

DTC B1063 – Side Sensor (Driver Side) Circuit Short to Ground
DTC B1064 – Side Sensor (Driver Side) Circuit Short to Power Circuit Or Open
DTC B1065 – Side Sensor (Passenger Side) Circuit Short to Ground
DTC B1066 – Side Sensor (Passenger Side) Circuit Short to Power Circuit or Open

WIRING DIAGRAM

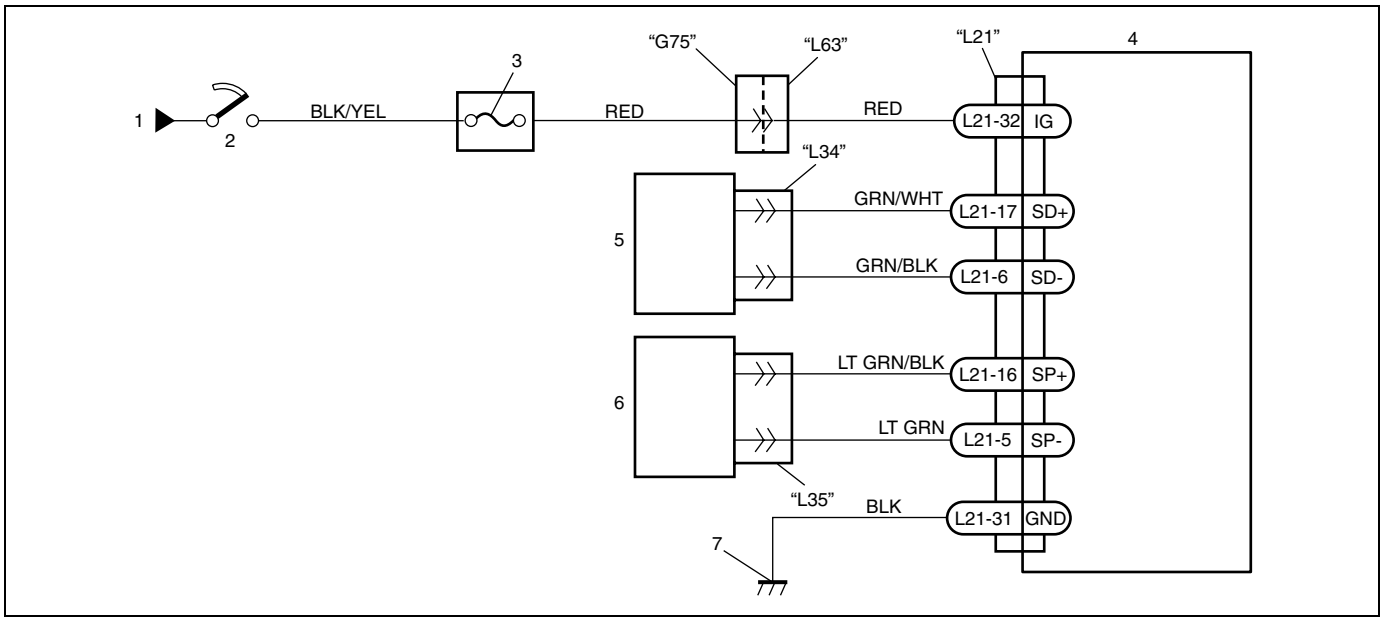

1. From main fuse	4. SDM	7. Ground for air bag system
2. Ignition switch	5. Side sensor (driver side)	
3. "AIR BAG" fuse	6. Side sensor (passenger side)	

CAUTION:

- **Be sure to perform "Air Bag Diagnostic System Check" before starting diagnosis according to flow table.**
- **When measurement of resistance or voltage is required in this table, use a tester along with a correct terminal adapter from special tool (Connector test adapter kit).**
- **When a check for proper connection is required, refer to "Intermittents and Poor Connections" in this section.**
- **If there is open circuit in the air bag wire harness, connector or terminal is found damaged, replace the wire harness, connector and terminal as an assembly.**

DTC WILL BE SET WHEN

DTC B1063 or B1065:

The voltage measured at side sensor (driver or passenger side) circuit is below a specified value for specified time.

DTC B1064 or B1066:

The voltage measured at side sensor (driver or passenger side) circuit is above a specified value for specified time.

TABLE TEST DESCRIPTION

DTC B1063, B1064, B1065 or B1066:

STEP 1: Check side sensor (driver or passenger side) circuit in floor harness.
STEP 2: Check side sensor (driver or passenger side) circuit in floor harness. (for DTC B1064 and B1066 only)

DIAGNOSTIC FLOW TABLE

DTC B1063 or B1065:

Step	Action	Yes	No
1	1) With ignition switch OFF, remove center pillar lower trim and side sill scuff, then disconnect side sensor connector. 2) Disconnect SDM connector “L21”. 3) Check proper connection to applicable side sensor at terminals in “L34” or “L35” connector. 4) If OK, measure resistance. • DTC B1063: between “L21-17” terminal and body ground, and between “L21-6” terminal and body ground. • DTC B1065: between “L21-16” terminal and body ground, and between “L21-5” terminal and body ground. Is resistance infinity?	Substitute a known-good side sensor and/or SDM and recheck.	DTC B1063: Repair short “GRN/WHT” or “GRN/BLK” wire circuit to ground. DTC B1065: Repair short “LT GRN/BLK” or “LT GRN” wire circuit to ground.

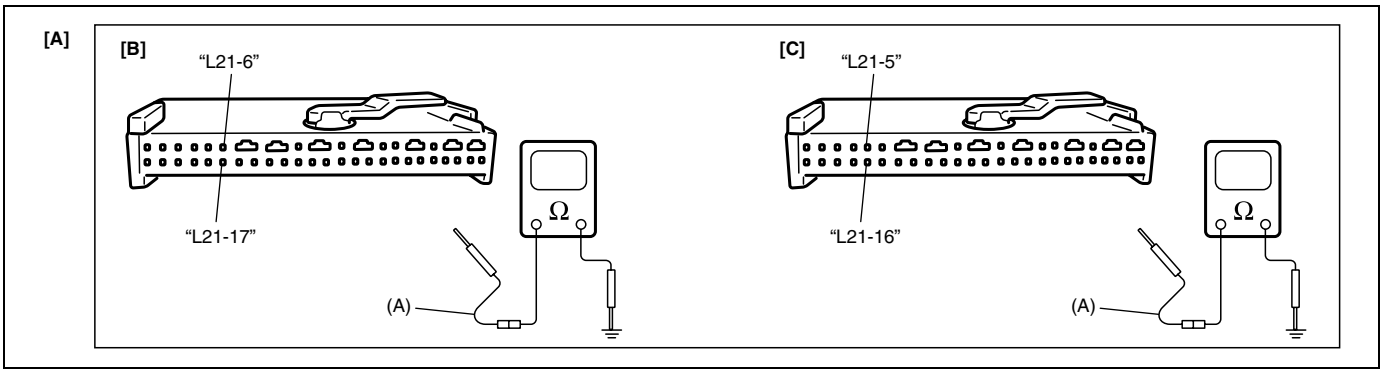

[A]: Fig. for STEP 1	[B]: For DTC B1063	[C]: For DTC B1065

Special tool
(A): 09932-76010

NOTE:

Upon completion of inspection and repair work, perform the following items.

- **Reconnect all air bag system components, ensure all components are properly mounted.**
- **Clear diagnostic trouble code (Refer to “Diagnostic Trouble Code (DTC) Clearance”), if any.**
- **Repeat “Air Bag Diagnostic System Check” to confirm that the trouble has been corrected.**

DTC B1064 or B1066:

Step	Action	Yes	No
1	1) With ignition switch OFF, remove center pillar lower trim and side sill scuff, then disconnect side sensor connector. 2) Disconnect SDM connector "L21". 3) Check proper connection to applicable side sensor at terminals in "L34" or "L35" connector. 4) If OK, measure resistance. • DTC B1064: between "L34-1" and "L21-17" terminals, and between "L34-2" and "L21-6" terminals. • DTC B1066: between "L35-1" and "L21-16" terminals, and between "L35-2" and "L21-5" terminals. Is resistance 0 – 1 Ω?	Got to Step 2.	DTC B1064: Repair open in "GRN/WHT" or "GRN/BLK" wire circuit. DTC B1066: Repair open in "LT GRN/BLK" or "LT GRN" wire circuit.
2	1) Measure voltage. • DTC B1064: between "L21-17" terminal and body ground, and between "L21-6" terminal and body ground. • DTC B1066: between "L21-16" terminal and body ground, and between "L21-5" terminal and body ground. With ignition switch ON, is voltage 0 – 1 V?	Substitute a known-good side sensor and/or SDM and recheck.	DTC B1064: Repair short "GRN/WHT" or "GRN/BLK" wire circuit to power circuit. DTC B1066: Repair short "LT GRN/BLK" or "LT GRN" wire circuit to power circuit.

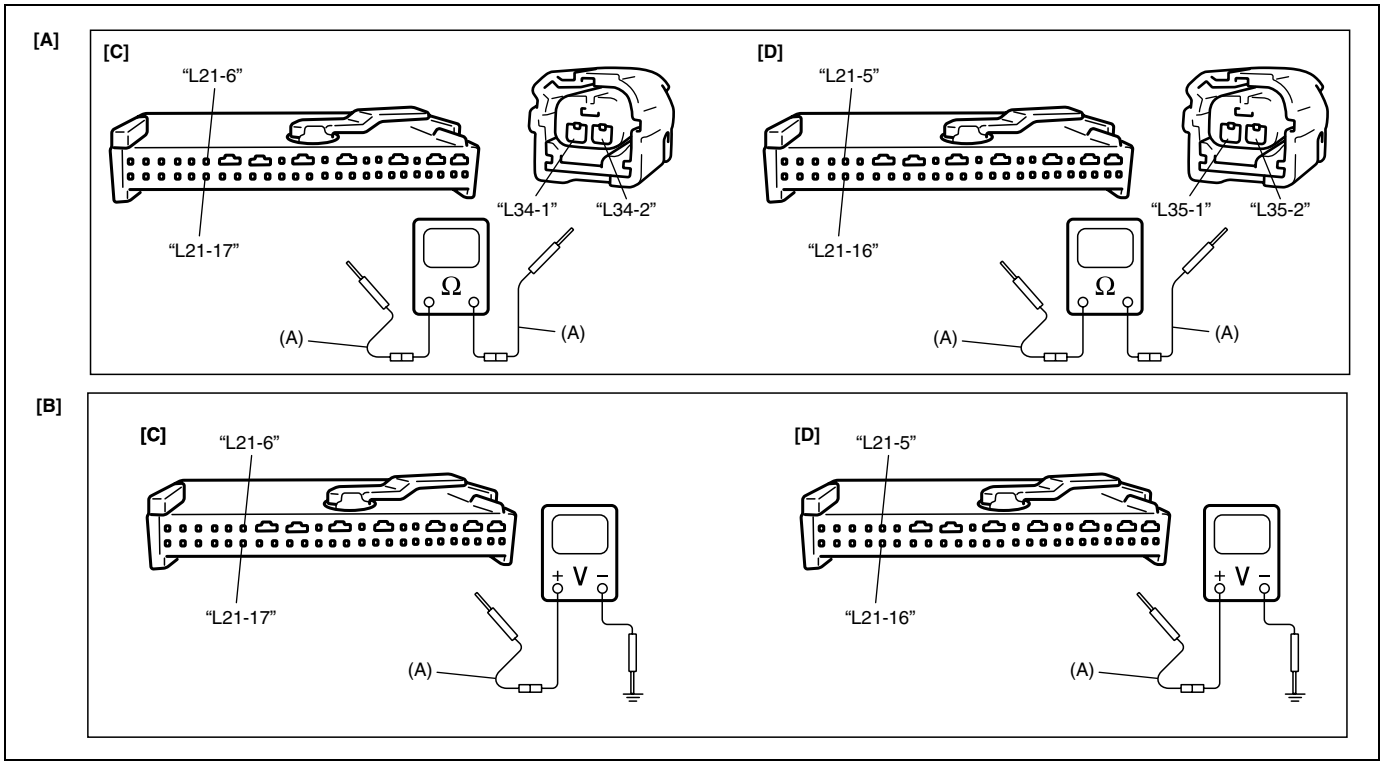

[A]: Fig. for STEP 1	[B]: Fig. for STEP 2	[C]: For DTC B1064	[D]: For DTC B1066

Special tool
(A): 09932-76010

NOTE:

Upon completion of inspection and repair work, perform the following items.

- **Reconnect all air bag system components, ensure all components are properly mounted.**
- **Clear diagnostic trouble code (Refer to "Diagnostic Trouble Code (DTC) Clearance"), if any.**
- **Repeat "Air Bag Diagnostic System Check" to confirm that the trouble has been corrected.**

DTC B1071 – Internal SDM Fault

DTC WILL BE SET WHEN

An internal SDM fault is detected by SDM.

NOTE:

Before executing items below, be sure to perform "Air Bag Diagnostic System Check".

NOTE:

DTC B1071 can never be cleared once it has been set.

1) Ignition switch OFF.
2) Replace SDM.
3) Repeat "Air Bag Diagnostic System Check".

DTC B1072 – Internal Side Sensor (Driver Side) Fault
DTC B1074 – Internal Side Sensor (Passenger Side) Fault

DTC WILL BE SET WHEN

DTC B1072 or B1074:

SDM receive internal fault signal from side sensor.

NOTE:

Before executing items below, be sure to perform "Air Bag Diagnostic System Check".

1) Ignition switch OFF.
2) Replace side sensor.
3) Repeat "Air Bag Diagnostic System Check".

DTC B1073 – Side Sensor (Driver Side) Correspondence Abnormality
DTC B1075 – Side Sensor (Passenger Side) Correspondence Abnormality

WIRING DIAGRAM

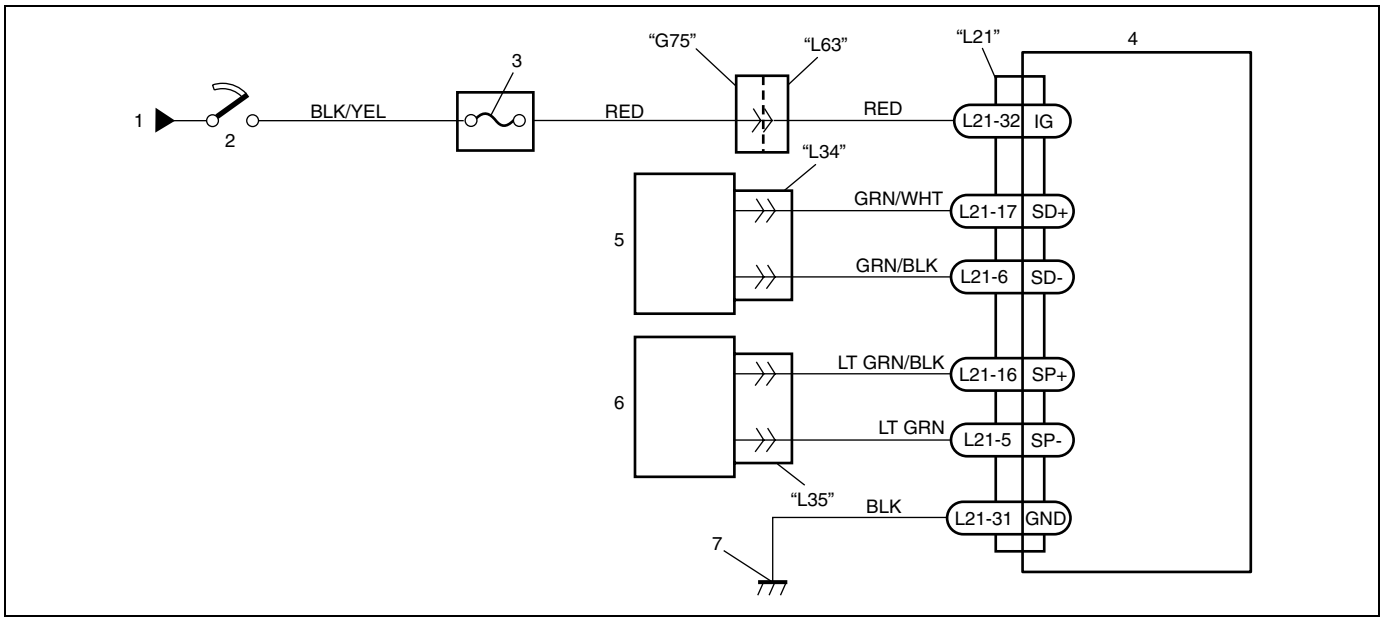

1. From main fuse	4. SDM	7. Ground for air bag system
2. Ignition switch	5. Side sensor (driver side)	
3. "AIR BAG" fuse	6. Side sensor (passenger side)	

CAUTION:

- **Be sure to perform "Air Bag Diagnostic System Check" before starting diagnosis according to flow table.**
- **When measurement of resistance or voltage is required in this table, use a tester along with a correct terminal adapter from special tool (Connector test adapter kit).**
- **When a check for proper connection is required, refer to "Intermittents and Poor Connections" in this section.**
- **If there is open circuit in the air bag wire harness, connector or terminal is found damaged, replace the wire harness, connector and terminal as an assembly.**

DTC WILL BE SET WHEN

DTC B1073 or B1075:

Side sensor abnormal signal is detected by SDM.

TABLE TEST DESCRIPTION

DTC B1073 or B1075:

STEP 1 to 4: Check side sensor circuit in floor harness.

DIAGNOSTIC FLOW TABLE

DTC B1073 or B1075:

Step	Action	Yes	No
1	1) With ignition switch OFF, disconnect SDM connector “L21” and side sensor connector. 2) DTC B1073: Check proper connection to side sensor at terminals in “L34” connector and to SDM at “L21-17” and “L21-6” terminals in SDM connector “L21”. DTC B1075: Check proper connection to side sensor at terminals in “L35” connector and to SDM at “L21-16” and “L21-5” terminals in SDM connector “L21”. 3) DTC B1073: If OK, then measure resistance between “L34-1” and “L21-17” terminals, and between “L34-2” and “L21-6” terminals. Is resistance 0 – 1Ω? DTC B1075: If OK, then measure resistance between “L35-1” and “L21-16” terminals, and between “L35-2” and “L21-5” terminals. Is resistance 0 – 1Ω?	Go to step 2.	DTC B1073: Repair high resistance or open in “GRN/WHT” or “GRN/BLK” wire. DTC B1075: Repair high resistance or open in “LT GRN/BLK” or “LT GRN” wire.
2	1) DTC B1073: Measure resistance between “L21-17” and “L21-6” terminals. Is resistance infinity? DTC 1075: Measure resistance between “L21-16” and “L21-5” terminals. Is resistance infinity?	Go to step 3.	DTC B1073: Repair short from “GRN/WHT” wire to “GRN/BLK” wire. DTC B1075: Repair short from “LT GRN/BLK” wire to “LT GRN” wire.
3	1) DTC B1073: Measure resistance between “L21-17” terminal and body ground, and between “L21-6” terminal and body ground. Is resistance infinity? DTC 1075: Measure resistance between “L21-16” terminal and body ground, and between “L21-5” terminal and body ground. Is resistance infinity?	Go to step 4.	DTC B1073: Repair short from “GRN/WHT” or “GRN/BLK” wire to body ground. DTC B1075: Repair short from “LT GRN/BLK” or “LT GRN” wire to body ground.

Step	Action	Yes	No
4	1) DTC B1073: Measure voltage from “L21-17” and “L21-6” terminals to body ground. With ignition switch ON, is voltage 0 - 1V? DTC B1075: Measure voltage from “L21-16” and “L21-5” terminals to body ground. With ignition switch ON, is voltage 0 – 1V?	Substitute a known-good side sensor and/or SDM and recheck.	DTC B1073: Repair short from “GRN/WHT” or “GRN/BLK” wire to power circuit. DTC B1075: Repair short from “LT GRN/BLK” or “LT GRN” to power circuit.

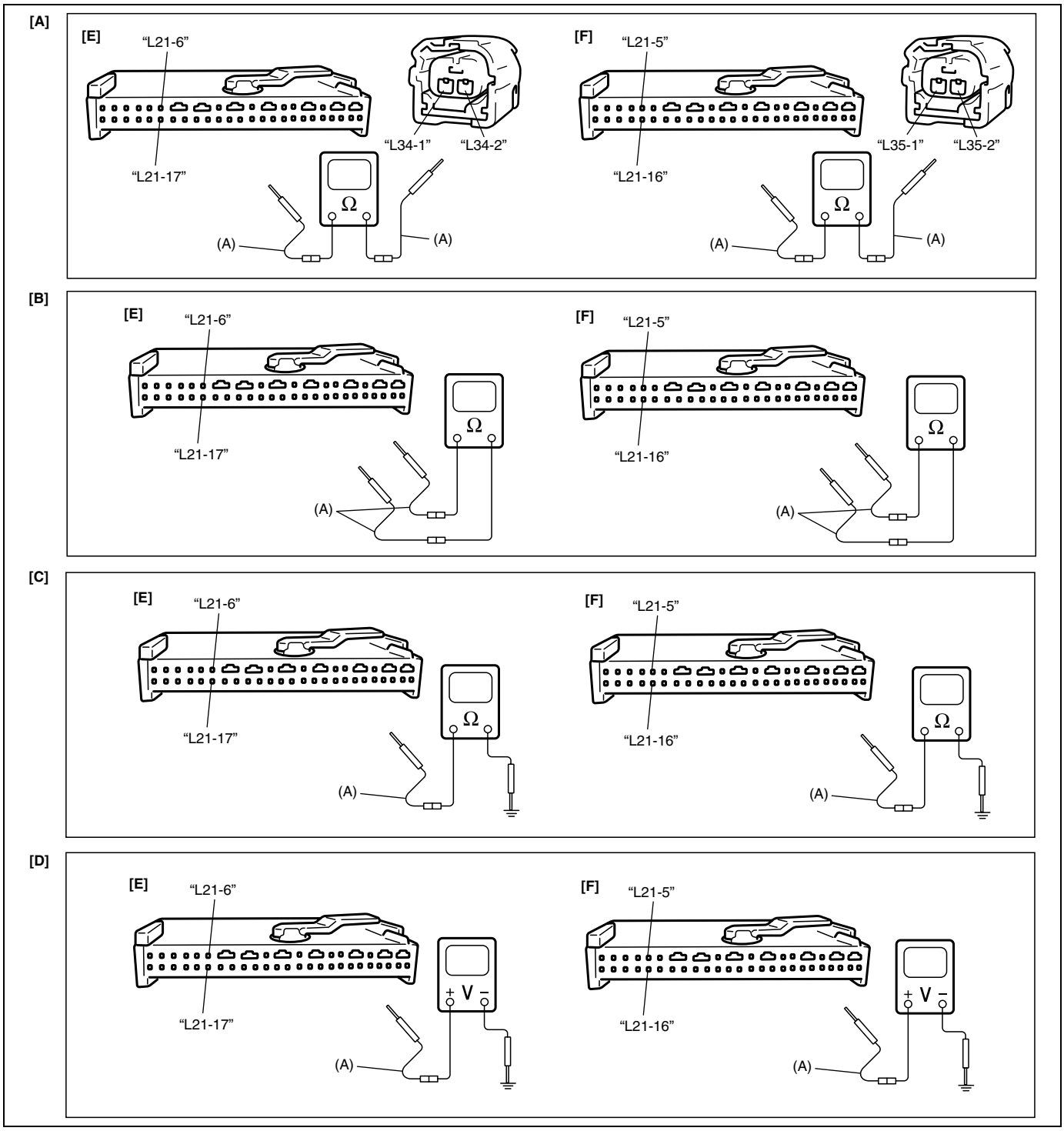

[A]: Fig. for STEP 1	[B]: Fig. for STEP 2	[C]: Fig. for STEP 3	[D]: Fig. for STEP 4	[E]: For DTC B1073	[F]: For DTC B1075

Special tool
(A): 09932-76010

NOTE:

Upon completion of inspection and repair work, perform the following items.

- **Reconnect all air bag system components, ensure all components are properly mounted.**
- **Clear diagnostic trouble code (Refer to "Diagnostic Trouble Code (DTC) Clearance"), if any.**
- **Repeat "Air Bag Diagnostic System Check" to confirm that the trouble has been corrected.**

DTC B1076 – Wrong Side Sensor (Driver Side) ID
DTC B1077 – Wrong Side Sensor (Passenger Side) ID

DTC WILL BE SET WHEN

DTC B1076 or B1077:

SDM receive wrong ID (Part No.) signal from side sensor.

NOTE:

- **Be sure executing items below, be sure to perform "Air Bag Diagnostic System Check".**
- **Confirm the part number of side sensor which is installed.**

1) Ignition switch OFF.
2) Replace side sensor.
3) Repeat "Air Bag Diagnostic System Check".

DTC B1081 – Side Air Bag (Driver Side) Intiator Circuit Resistance High
DTC B1082 – Side Air Bag (Driver Side) Intiator Circuit Resistance Low
DTC B1083 – Side Air Bag (Driver Side) Intiator Circuit Short to Ground
DTC B1084 – Side Air Bag (Driver Side) Intiator Circuit Short to Power Circuit
DTC B1085 – Side Air Bag (Passenger Side) Intiator Circuit Resistance High
DTC B1086 – Side Air Bag (Passenger Side) Intiator Circuit Resistance Low
DTC B1087 – Side Air Bag (Passenger Side) Intiator Circuit Short to Ground
DTC B1088 – Side Air Bag (Passenger Side) Intiator Circuit Short to Power Circuit

WIRING DIAGRAM

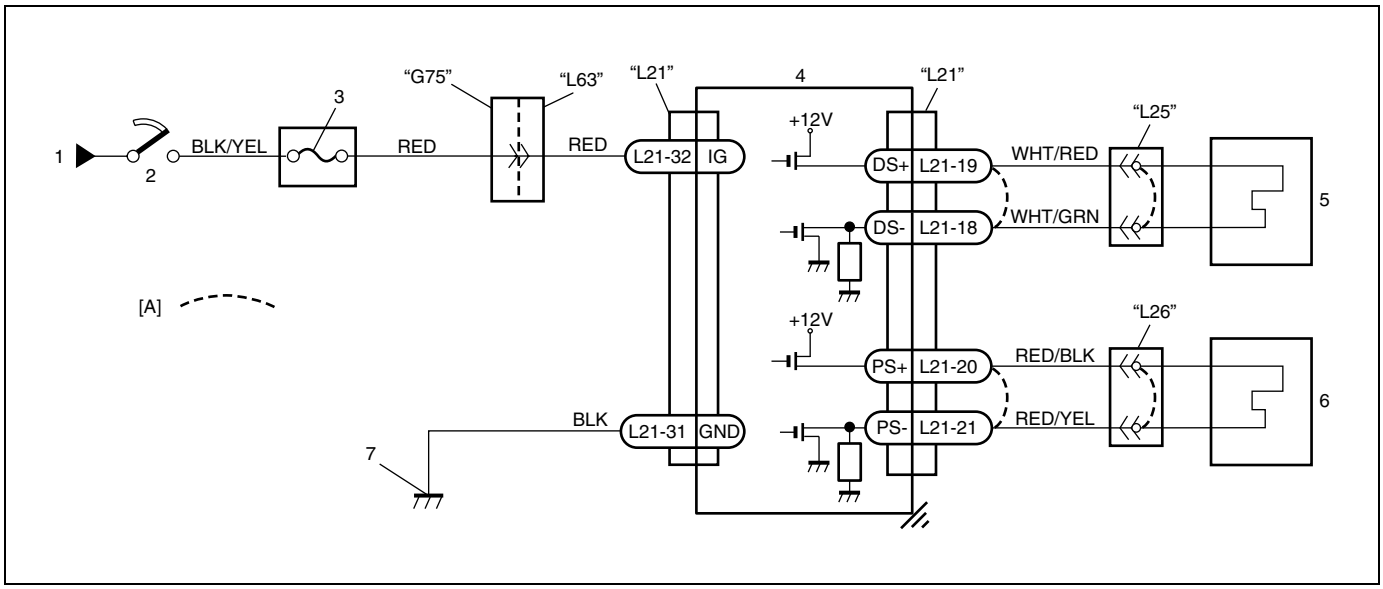

[A]: Shorting bar	2. Ignition switch	4. SDM	6. Side air bag (passenger side) (inflator) module
1. From main fuse	3. "AIR BAG" fuse	5. Side air bag (driver side) (inflator) module	7. Ground for air bag system

CAUTION:

- **Be sure to perform "Air Bag Diagnostic System Check" before starting diagnosis according to flow table.**
- **When measurement of resistance or voltage is required in this table, use a tester along with a correct terminal adapter from special tool (Connector test adapter kit).**
- **When a check for proper connection is required, refer to "Intermittents and Poor Connections" in this section.**
- **If there is open circuit in the air bag wire harness, connector or terminal is found damaged, replace the wire harness, connector and terminal as an assembly.**

DTC WILL BE SET WHEN

DTC B1081 or B1085:

The combined resistance of the side air bag (inflator) module (driver or passenger side), harness wiring and connector terminal contact is above the specified value for specified time.

DTC B1082 or B1086:

The combined resistance of the side air bag (inflator) module (driver or passenger side), harness wiring and connector terminal contact is below the specified value for specified time.

DTC B1083 or B1087:

The voltage measured at side air bag (driver or passenger side) initiator circuit is below the specified value for specified time.

DTC B1084 or B1088:

The voltage measured at side air bag (driver or passenger side) initiator circuit is below the specified value for specified time.

TABLE TEST DESCRIPTION

DTC B1081, B1082, B1083, B1084, B1085, B1086, B1087,or B1088:

STEP 1: Check whether malfunction is in side air bag (inflator) module.
STEP 2: Check side air bag initiator circuit in floor harness.

DIAGNOSTIC FLOW TABLE

DTC B1081 or B1085

Step	Action	Yes	No
1	1) With ignition switch OFF, disconnect side air bag (inflator) module connector under front seat cushion. 2) Check proper connection to applicable side air bag (inflator) module at terminals in "L25" or "L26" connector. 3) If OK, then connect Special tool (B) and (C) to side air bag (inflator) module connector disconnected at the step 1. With ignition switch ON, is DTC B1081 or B1085 still current?	Go to step 2.	Ignition switch OFF. Replace side air bag (inflator) module (Refer to "Side Air Bag (Inflator) Module (If Equipped) Inspection" in this section.).
2	1) With ignition switch OFF, disconnect SDM connector "L21". 2) Check proper connection to SDM at terminals "L21-19" and "L21-18" or "L21-20" and "L21-21". 3) If OK, then measure resistance with connected Special Tool (B) and (C). • DTC B1081: between "L21-19" and "L21-18" terminals. • DTC B1085: between "L21-20" and "L21-21" terminals. Is resistance 2.8 Ω or less?	Substitute a known-good SDM and recheck.	DTC B1081: Repair high resistance or open in "WHT/RED" or "WHT/GRN" wire circuit. DTC B1085: Repair high resistance or open in "RED/BLK" or "RED/YEL" wire circuit.

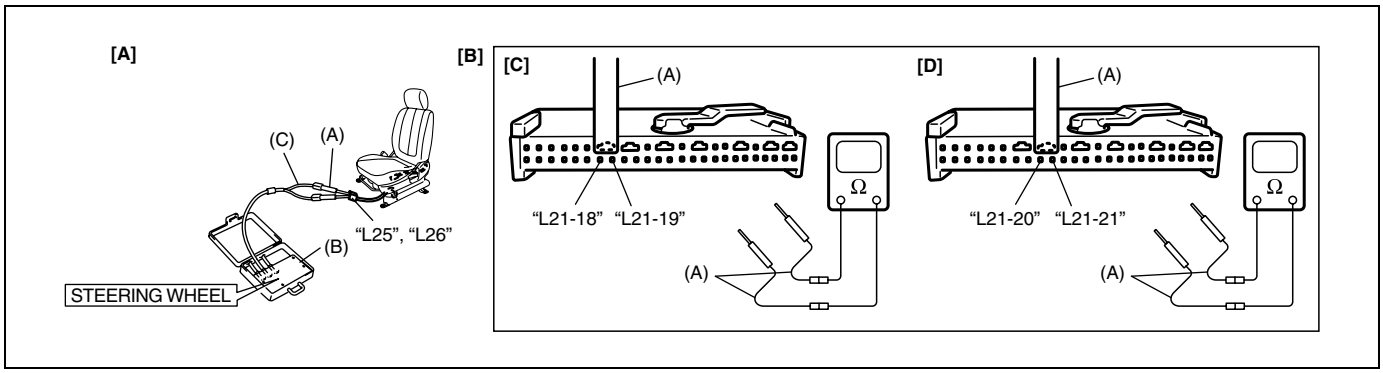

[A]:	Fig. for STEP 1 and 2
[B]:	Fig. for STEP 2
[C]:	For DTC B1081
[D]:	For DTC B1085

Special tool
(A): 09932-76010
(B): 09932-75010
(C): 09932-78310

NOTE:

Upon completion of inspection and repair work, perform the following items.

- **Reconnect all air bag system components, ensure all components are properly mounted.**
- **Clear diagnostic trouble code (Refer to "Diagnostic Trouble Code (DTC) Clearance"), if any.**
- **Repeat "Air Bag Diagnostic System Check" to confirm that the trouble has been corrected.**

DTC B1082 or B1086

Step	Action	Yes	No
1	1) With ignition switch OFF, disconnect side air bag (inflator) module connector under front seat cushion. 2) Check proper connection to applicable side air bag (inflator) module at terminals in "L25" or "L26" connector. 3) If OK, then connect Special tool (B) and (C) to side air bag (inflator) module connector disconnected at the step 1. With ignition switch ON, is DTC B1082 or B1086 still current?	Go to step 2.	Ignition switch OFF. Replace side air bag (inflator) module (Refer to "Side Air Bag (Inflator) Module (If Equipped) Inspection" in this section.).

Step	Action	Yes	No
2	1) With ignition switch OFF, disconnect SDM connector “L21”. 2) Check proper connection to SDM at terminals “L21-19” and “L21-18” or “L21-20” and “L21-21”. 3) If OK, then measure resistance with connected Special Tool (B) and (C). • DTC B1082: between “L21-19” and “L21-18” terminals. • DTC B1086: between “L21-20” and “L21-21” terminals. Is resistance 1.8 Ω or more?	Substitute a known-good SDM and recheck.	DTC B1082: Repair short from “WHT/RED” wire circuit to “WHT/GRN” wire circuit or from “WHT/RED” or “WHT/GRN” wire circuit to other wire circuit. DTC B1086: Repair short from “RED/BLK” wire circuit to “RED/YEL” wire circuit or from “RED/BLK” or “RED/YEL” wire circuit to other wire circuit.

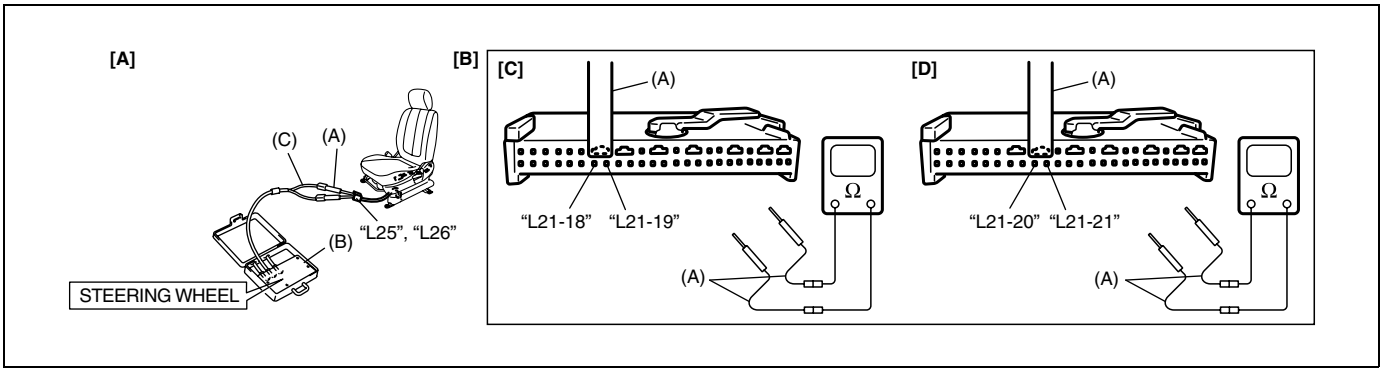

[A]: Fig. for STEP 1 and 2
[B]: Fig. for STEP 2
[C]: For DTC B1082
[D]: For DTC B1086

Special tool
(A): 09932-76010
(B): 09932-75010
(C): 09932-78310

NOTE:

Upon completion of inspection and repair work, perform the following items.
- **Reconnect all air bag system components, ensure all components are properly mounted.**
- **Clear diagnostic trouble code (Refer to “Diagnostic Trouble Code (DTC) Clearance”), if any.**
- **Repeat “Air Bag Diagnostic System Check” to confirm that the trouble has been corrected.**

DTC B1083 or B1087

Step	Action	Yes	No
1	1) With ignition switch OFF, disconnect side air bag (inflator) module connector under front seat cushion. 2) Check proper connection to applicable side air bag (inflator) module at terminals in "L25" or "L26" connector. 3) If OK, then connect Special tool (B) and (C) to side air bag (inflator) module connector disconnected at the step 1. With ignition switch ON, is DTC B1083 or B1087 still current?	Go to step 2.	Ignition switch OFF. Replace side air bag (inflator) module (Refer to "Side Air Bag (Inflator) Module (If Equipped) Inspection" in this section.).
2	1) With ignition switch OFF, disconnect Special Tool (B) and (C) and SDM connector "L21". 2) Measure resistance. • DTC B1083: between "L21-19" terminal and body ground, and between "L21-18" terminal and body ground. • DTC B1087: between "L21-20" terminal and body ground, and between "L21-21" terminal and body ground. Is resistance infinity?	Substitute a known-good SDM and recheck.	DTC B1083: Repair short from "WHT/RED" or "WHT/GRN" wire circuit to ground. DTC B1087: Repair short from "RED/BLK" or "RED/YEL" wire circuit to ground.

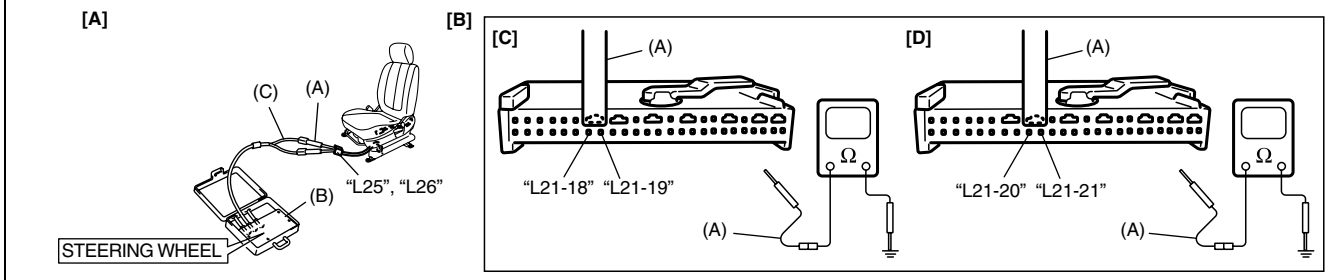

[A]: Fig. for STEP 1 and 2
[B]: Fig. for STEP 2
[C]: For DTC B1083
[D]: For DTC B1087

Special tool
(A): 09932-76010
(B): 09932-75010
(C): 09932-78310

NOTE:

Upon completion of inspection and repair work, perform the following items.

- **Reconnect all air bag system components, ensure all components are properly mounted.**
- **Clear diagnostic trouble code (Refer to "Diagnostic Trouble Code (DTC) Clearance"), if any.**
- **Repeat "Air Bag Diagnostic System Check" to confirm that the trouble has been corrected.**

DTC B1084 or B1088

Step	Action	Yes	No
1	1) With ignition switch OFF, disconnect side air bag (inflator) module connector under front seat cushion. 2) Check proper connection to applicable side air bag (inflator) module at terminals in "L25" or "L26" connector. 3) If OK, then connect Special tool (B) and (C) to side air bag (inflator) module connector disconnected at the step 1. With ignition switch ON, is DTC B1084 or B1088 still current?	Go to step 2.	Ignition switch OFF. Replace side air bag (inflator) module (Refer to "Side Air Bag (Inflator) Module (If Equipped) Inspection" in this section.).
2	1) With ignition switch OFF, disconnect Special Tool (B), (C) and SDM connector "L21". 2) Measure voltage. • DTC B1084: between "L21-19" terminal and body ground, and between "L21-18" terminal and body ground. • DTC B1088: between "L21-20" terminal and body ground, and between "L21-21" terminal and body ground. With ignition switch ON, is voltage 0 – 1 V?	Substitute a known-good SDM and recheck.	DTC B1084: Repair short from "WHT/RED" or "WHT/GRN" wire circuit to ground. DTC B1088: Repair short from "RED/BLK" or "RED/YEL" wire circuit to power circuit.

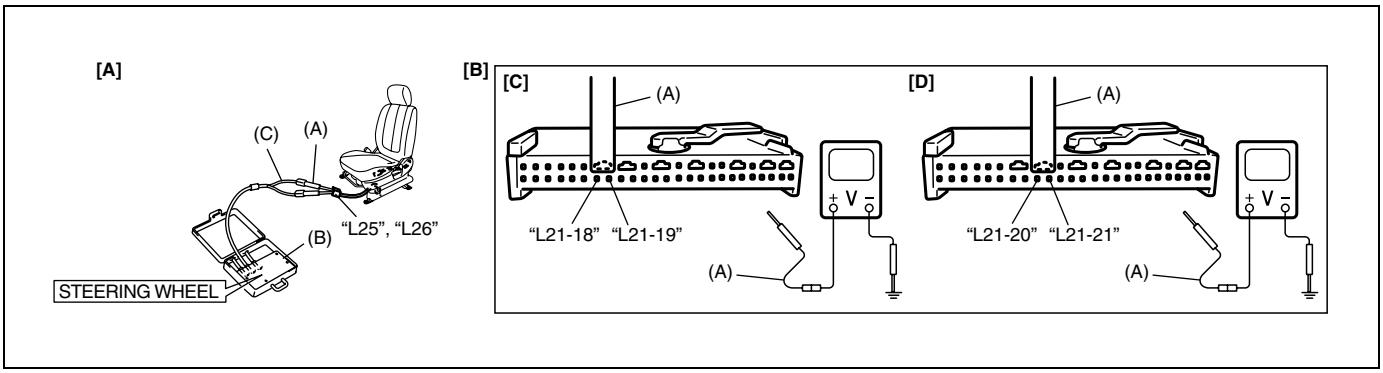

[A]: Fig. for STEP 1 and 2
[B]: Fig. for STEP 2
[C]: For DTC B1084
[D]: For DTC B1088

Special tool
(A): 09932-76010
(B): 09932-75010
(C): 09932-78310

NOTE:

Upon completion of inspection and repair work, perform the following items.

- **Reconnect all air bag system components, ensure all components are properly mounted.**
- **Clear diagnostic trouble code (Refer to "Diagnostic Trouble Code (DTC) Clearance"), if any.**
- **Repeat "Air Bag Diagnostic System Check" to confirm that the trouble has been corrected.**

On-Vehicle Service

Service Precautions

Service and diagnosis

WARNING/CAUTION labels are attached on each part of air bag system components (SDM, air bag (inflator) modules and seat belt pretensioners). Be sure to follow the instructions.

WARNING:

- **If the air bag system and another vehicle system both need repair, Suzuki recommends that the air bag system be repaired first, to help avoid unintended air bag system activation.**
- **Do not modify the steering wheel, dashboard or any other on or around air bag system components. Modifications can adversely affect air bag system performance and lead to injury.**
- **Failure to follow procedures could result in possible air bag system activation, personal injury or unneeded air bag system repairs.**

- Many of service procedures require disconnection of “AIR BAG” fuse and air bag (inflator) module(s) (driver, passenger and side of driver and passenger) from initiator circuit to avoid an accidental deployment.
- Do not apply power to the air bag system unless all components are connected or a diagnostic chart requests it, as this will set a diagnostic trouble code (DTC).
- The “Air Bag Diagnostic System Check” must be the starting point of any air bag diagnostics. The “Air Bag Diagnostic System Check” will verify proper “AIR BAG” warning lamp operation and will lead you to the correct table to diagnose any air bag malfunctions. Bypassing these procedures may result in extended diagnostic time, incorrect diagnosis, and incorrect parts replacements.
- Never use air bag component parts from another vehicle.
- If the vehicle will be exposed to temperatures over 93°C (200°F) (for example, during a paint baking process), remove the air bag system components beforehand to avoid component damage or unintended system activation.
- When handling the air bag (inflator) modules (driver, passenger and side of driver and passenger), seat belt pretensioners (driver and passenger), side sensors or SDM, be careful not to drop it or apply an impact to it. If an excessive impact was applied (e.g., side sensors are dropped, SDM is dropped, air bag (inflator) module is dropped from a height of 90 cm (3 ft) or more, seat belt pretensioner (retractor assembly) is dropped from a height of 30 cm (1 ft) or more), never attempt disassembly or repair but replace it with a new one.
- When using electric welding, be sure to disconnect air bag (inflator) module connectors (driver, passenger and side of driver and passenger) and seat belt pretensioner connectors (driver and passenger) respectively.
- When applying paint around the air bag system related parts, use care so that the harness or connector will not be exposed to the paint mist.
- Never expose air bag system component parts directly to hot air (drying or baking the vehicle after painting) or flames.

WARNING:

When performing service on or around air bag system components or air bag wiring, follow the procedures listed in the following pages to temporarily disable the air bag system.
Failure to follow procedures could result in possible air bag system activation, personal injury or unneeded air bag system repairs.

Disabling air bag system

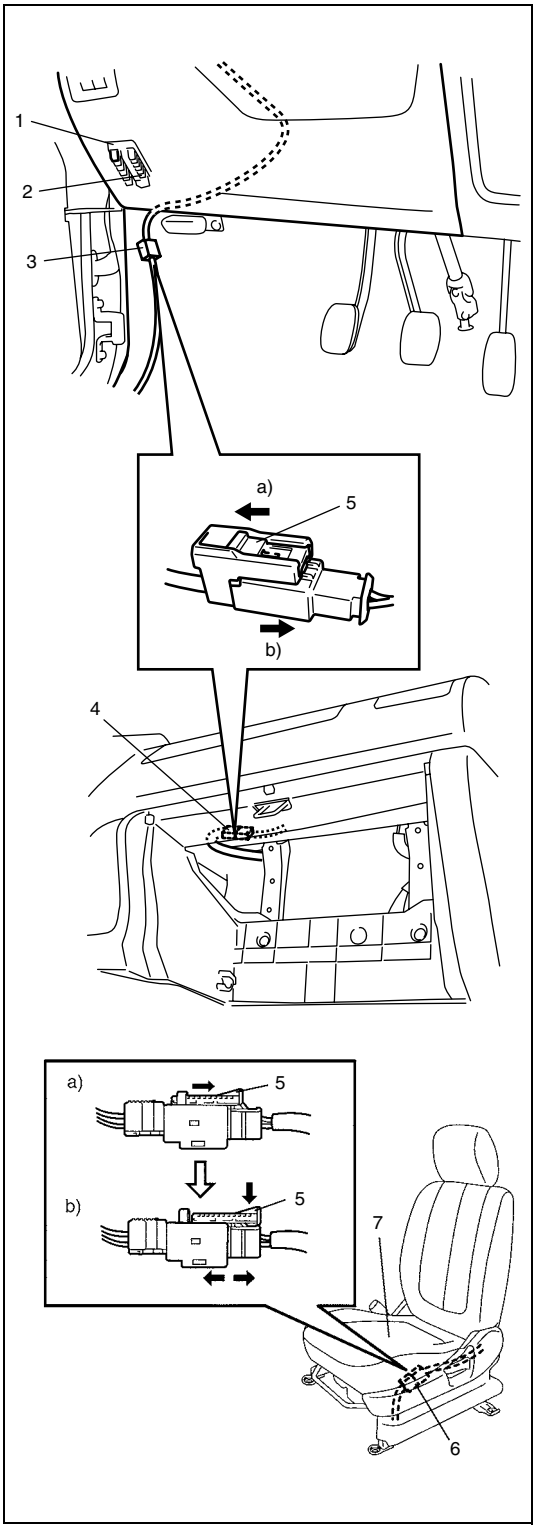

1) Turn steering wheel so that vehicle's wheels (front tires) and pointing straight ahead.
2) Turn ignition switch to "LOCK" position and remove key.
3) Remove "AIR BAG" fuse (2) from fuse box (1).
4) Disconnect Yellow connector (3) of contact coil and combination switch assembly as follows.
   a) Release locking of lock slider (5).
   b) After unlocked, disconnect connector.
5) In case of passenger air bag (inflator) module, pull out glove box while pushing its stopper from both right and left sides and disconnect Yellow connector (4) of passenger air bag (inflator) module.
   a) Release locking of lock slider (5).
   b) After unlocked, disconnect connector.
6) If equipped with side air bag (inflator) module, disconnect Yellow connector (6) of side air bag (inflator) module under front seat cushion (7).
   a) Release locking of lock slider (5).
   b) After unlocked, push down lock slider (5) and disconnect connector.

NOTE:

With "AIR BAG" fuse removed and ignition switch ON, "AIR BAG" warning lamp will be ON.
This is normal operation and does not indicate a air bag system malfunction.

Enabling air bag system

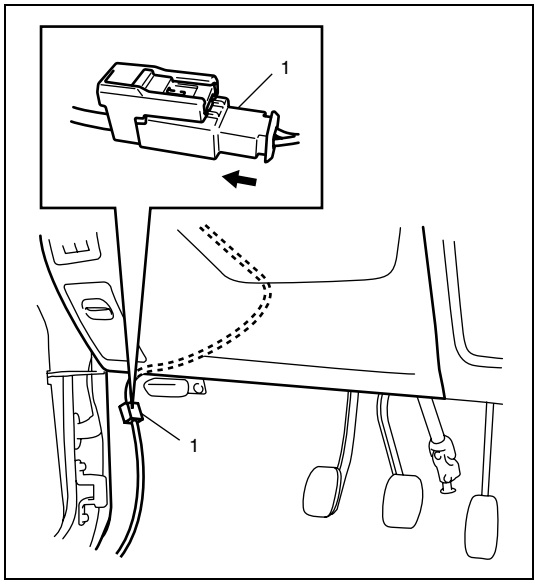

1) Turn ignition switch to “LOCK” position and remove key.
2) Connect Yellow connector (1) of contact coil and combination switch assembly by pushing connector till clicks heard from it.

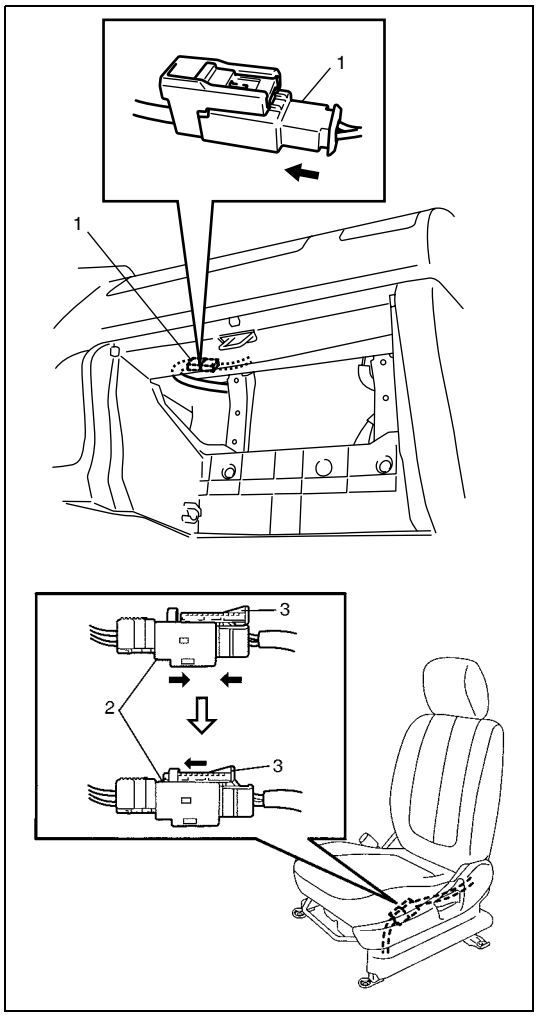

3) In case of passenger air bag (inflator) module, connect Yellow connector (1) of passenger air bag (inflator) module by pushing connector till click is heard from it.
4) Install glove box.
5) If equipped with side air bag (inflator) module, connect Yellow connector (2) of side air bag (inflator) module, and be sure to lock connector with lock slider (3).
6) Install “AIR BAG” fuse to fuse box.
7) Turn ignition switch to ON position and verify that “AIR BAG” warning lamp flashes 6 times and then turns OFF.
   If it does not operate as described, perform “Air Bag Diagnostic System Check”.

Handling and storage

SDM

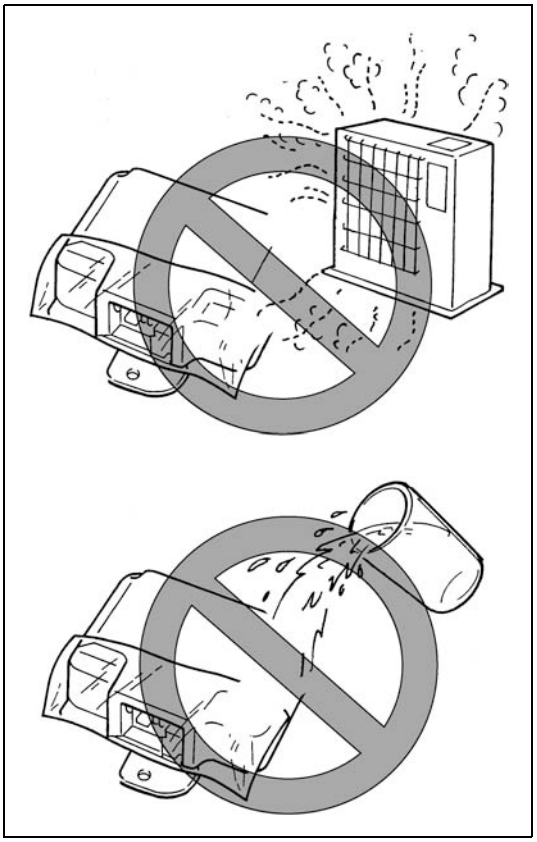

WARNING:

Never power up air bag system when SDM is not rigidly attached to the vehicle. Otherwise, personal injury may result.

CAUTION:

After detecting one time of such collision as to meet deployment conditions, the SDM must not be used. Refer to "Air Bag Diagnostic System Check" when checking the SDM.

- Never attempt disassembly of SDM.
- When storing SDM, select a place where neither high temperature nor high humidity is anticipated and oil, water and dust are kept off.
- If SDM has been dropped, replace it with a new one.
- If installation part of SDM was damaged, repair that part completely before reinstallation.
- All SDM and mounting bracket fasteners must be carefully torqued and the arrow must be pointed toward the front of the vehicle to ensure proper operation of the air bag system.

LIVE (UNDEPLOYED) AIR BAG (INFLATOR) MODULES

Special care is necessary when handling and storing a live (undeployed) air bag (inflator) modules.
The rapid gas generation produced during deployment of the air bag could cause the air bag (inflator) module, or an object in front of the air bag (inflator) module, to be thrown through the air in the unlikely event of an accidental deployment.

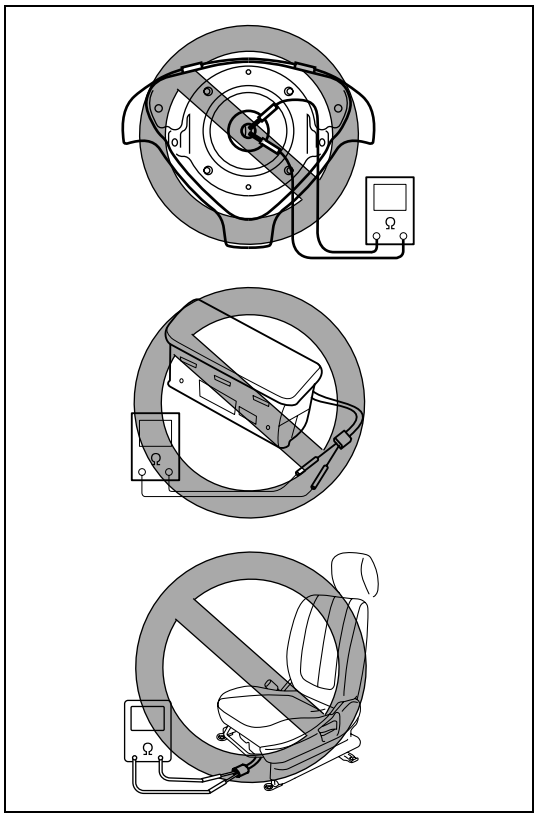

WARNING:

Never attempt to measure the resistance of the air bag (inflator) modules (driver, passenger and side). It is very dangerous as the electric current from the tester may deploy the air bag.

- Never attempt disassembly of the air bag (inflator) modules.
- If any abnormality is found, be sure to replace it with new one as an assembly.
- When an abnormality is noted as existing in the live (undeployed) air bag (inflator) module, be sure to deploy it before discarding it.
- When grease, cleaning agent, oil, water, etc., got on the air bag (inflator) modules (driver, passenger and side of driver and passenger), wipe it off immediately with a dry cloth.
- If air bag (inflator) module was dropped from a height of 90 cm (3 ft) or more, it should be replaced with a new one as an assembly.

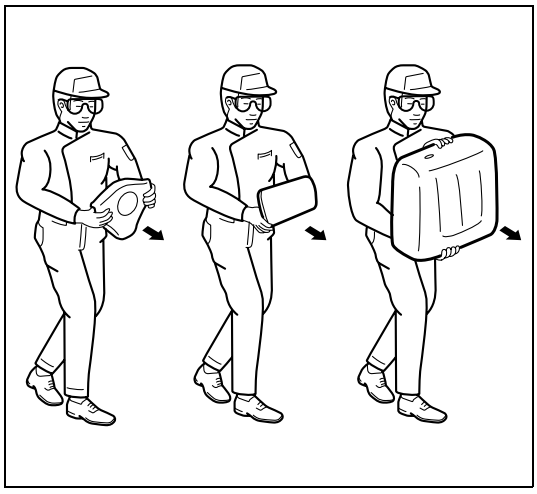

WARNING:

- **For handling and storage of a live air bag (inflator) module, select a place where the ambient temperature below 65°C (150°F), without high humidity and away from electric noise.**
- **When carrying a live air bag (inflator) module, make sure the bag opening is pointed away from you. In case of an accidental deployment, the bag will then deploy with minimal chance of injury. Never carry the air bag (inflator) module by the wires or connector on the underside of the module.**

Otherwise, personal injury may result.

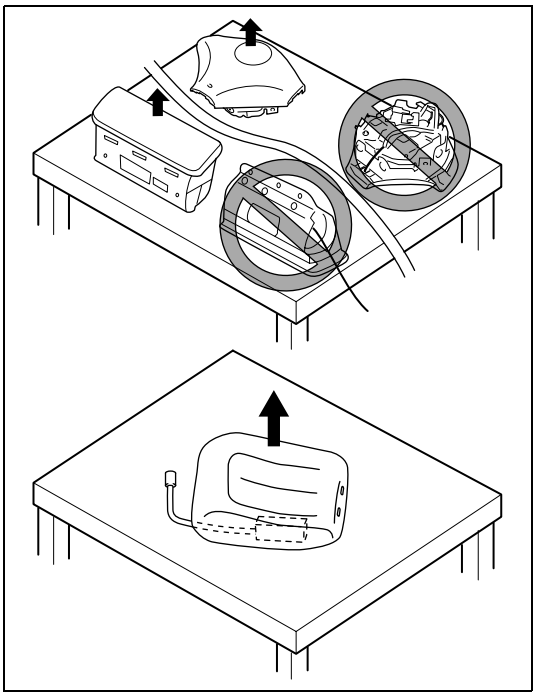

WARNING:

When placing a live air bag (inflator) module on bench or other surface, always face the bag up, away from the surface. The front seat back with the live side air bag (inflator) module must be placed with its frontal seat cover facing up.
It is also prohibited to place anything on top of the trim cover and stack air bag (inflator) modules.
This is necessary so that a free space is provided to allow the air bag to expand in the unlikely event of accidental deployment.
Otherwise, personal injury may result.

LIVE (INACTIVATED) SEAT BELT PRETENSIONER

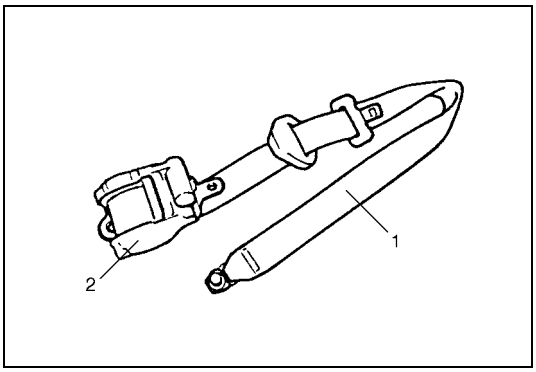

Special care is necessary when handling and storing a live (inactivated) seat belt pretensioners.
Also, when the seat belt pretensioners activate, gas is generated and the seat belt (1) is retracted into the retractor assembly (2) quickly.
Note, therefore, that if they activate accidentally, the seat belt pretensioners and other object(s) around them may be thrown through the air.

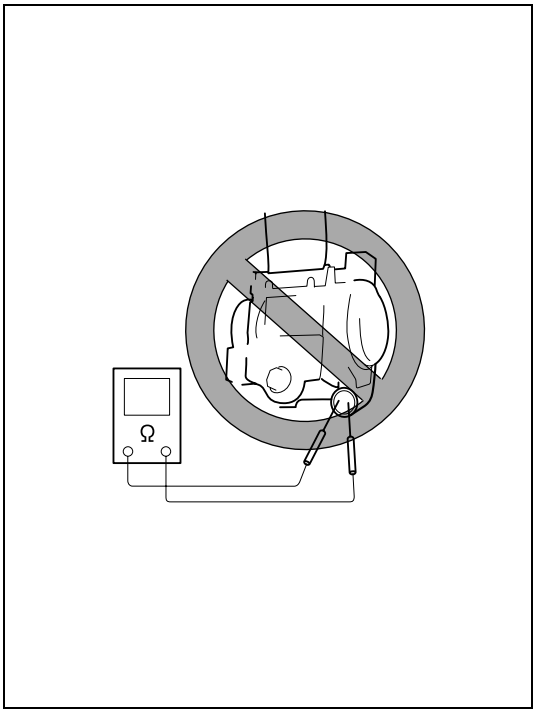

WARNING:

Never attempt to measure the resistance of the seat belt pretensioners. It is very dangerous as the electric current from the tester may activate pretensioner.

- Never attempt to disassemble the seat belt pretensioners (retractor assembly).
- If any abnormality is found, be sure to replace it with new one as an assembly.
- When an abnormality is noted as existing in the live (inactivated) seat belt pretensioner, be sure to activate it before discarding it.
- When grease, cleaning agent oil, water, etc., got on the seat belt pretensioners (retractor assembly), wipe it off immediately with a dry cloth.
- If seat belt pretensioner was dropped from a height of 30 cm (1 ft) or more, it should be replaced with a new one as an assembly.

WARNING:

- **For handling and storage of a live seat belt pretensioner, select a place where the ambient temperature below 65°C (150°F), without high humidity and away from electric noise.**
- **Never carry the seat belt pretensioner by webbing.**
- **When placing live seat belt pretensioner on workbench or other surface, be sure not to put something on seat belt pretensioner.**

Otherwise, personal injury may result.

DEPLOYED AIR BAG (INFLATOR) MODULE AND ACTIVATED SEAT BELT PRETENSIONER

WARNING:

- **The air bag (inflator) module and seat belt pretensioner immediately after deployment/activation is very hot. Wait for at least 30 minutes to cool it off before proceeding the work.**
- **Do not apply water, oil, etc. to deployed air bag (inflator) module and to activated seat belt pretensioner.**
- **After an air bag (inflator) module has been deployed, the surface of the air bag may contain a powdery residue. This powder consists primarily of cornstarch (used to lubricate the bag as it inflates) and by-products of the chemical reaction. As with many service procedures, gloves and safety glasses should be worn.**
- **Wash your hands with mild soap and water after completing the work.**

Refer to the procedure described under “Deployed Air Bag (Inflator) Module and Activated Seat Belt Pretensioner Disposal”.

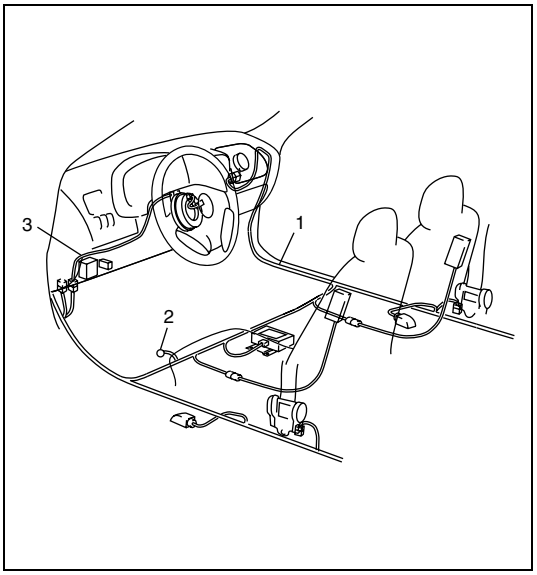

AIR BAG WIRE HARNESS AND CONNECTOR IN FLOOR AND INSTRUMENT WIRE HARNESS

Air bag wire harness is included in floor harness (1) and instrument harness (3). The part of coupler side wire harness can be identified easily as it is covered with a yellow protection tube. Be very careful when handling it.

- When an open in air bag wire harness (in floor harness (1)) and (in instrument harness (3)), damaged wire harness, connector or terminal is found, replace wire harness, connectors and terminals as an assembly.
- When installing it, be careful so that the air bag wire harness (in floor harness (1) and in instrument harness (3)) is not caught or does not interfere with other parts.
- Make sure air bag system grounding point (2) are clean and grounds are securely fastened for optimum metal-to-metal contact. Poor grounding can cause intermittent problems that are difficult to diagnose.

DISPOSAL

Do not dispose of the live (undeployed) air bag (inflator) modules and the live (inactivated) seat belt pretensioners. When disposal is necessary, be sure to deploy/activate the air bag and seat belt pretensioner according to deployment/activation procedure described in “Air Bag (Inflator) Module and Seat Belt Pretensioner Disposal”.

WARNING:

Failure to follow proper air bag (inflator) module and seat belt pretensioner disposal procedures can result in air bag deployment and pretensioner activation which could cause personal injury. Undeployed air bag (inflator) module and inactivated seat belt pretensioner must not be disposed of through normal refuse channels.

The undeployed air bag (inflator) module and inactivated seat belt pretensioner contain substances that can cause severe illness or personal injury if the sealed container is damaged during disposal.

Repairs and Inspections Required after an Accident

CAUTION:

- **All air bag system components, including the electrical harness (component mounting points), must be inspected after an accident. If any components are damaged or bent, they must be replaced even if air bag system activation did not occur.**
- **Never use air bag system parts from another vehicle.**
- **Do not attempt to service the parts below. Service of these parts is by replacement only.**
  - **Driver/Passenger/Side air bag (inflator) module, Driver/Passenger seat belt pretensioner**
  - **SDM**
  - **Side sensors**
  - **Contact coil and combination switch assembly**
  - **Floor wire harness or instrument wire harness including air bag wire harness**
- **Proper operation of the air bag system requires that any repairs to the vehicle structure return it to its original production configuration.**

CAUTION:

After detecting one time of such collision as to meet deployment conditions, the SDM must not be used. Refer to "Air Bag Diagnostic System Check" when checking the SDM.

Accident with deployment/activation – component replacement

When driver and passenger air bag is deployed, the following components must be replaced.

- Driver and passenger air bag (inflator) modules
- Driver and passenger seat belt pretensioners
- SDM

When side air bag is deployed, the following components must be replaced.

- Applicable side air bag (inflator) module with seat back assembly
- Side sensor
- SDM

Accident with or without deployment/activation – component inspections

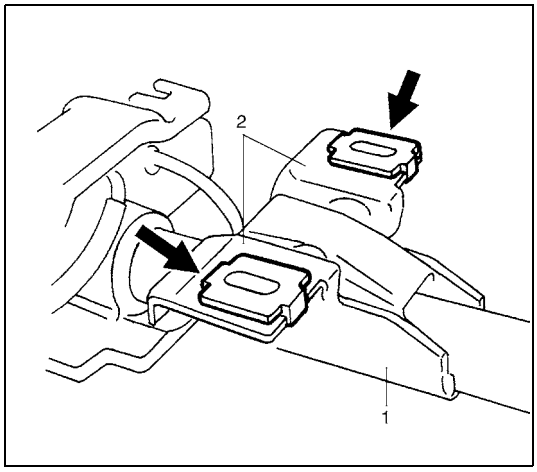

Certain air bag system components must be inspected after any crash, whether the air bag system activated or not.

Those components are:

- Steering column (1) and shaft joints
  - Check for length, damage and bend according to "Checking Steering Column For Accident Damage" in Section 3C.

If any faulty condition is found in above checks, replace faulty part.

- Steering column bracket (2)
  - Check for damage and bent.

If any faulty condition is found in above checks, replace faulty part.

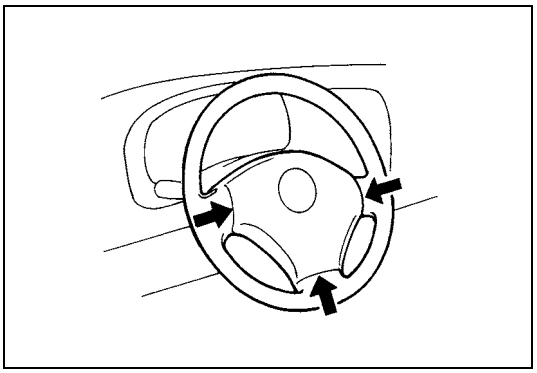

- Steering wheel and driver air bag (inflator) module
  - Check for damage or air bag (inflator) module fitness.
  - Check trim cover (pad surface) for cracks.
  - Check wire harness and connector for damage or tightness.

If any faulty condition is found in above checks, replace faulty part.

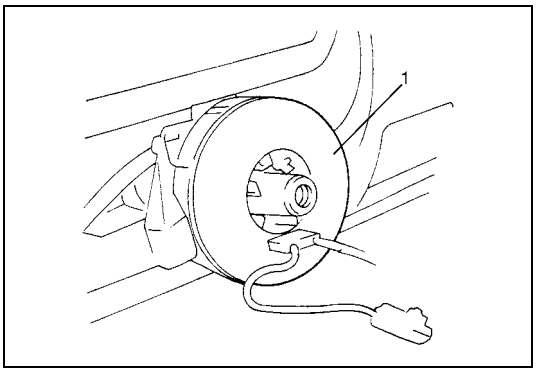

- Contact coil and combination switch assembly
  - Check wire harness and connectors for damage or tightness.
  - Check contact coil case for damage.

If any faulty condition is found in above checks, replace.

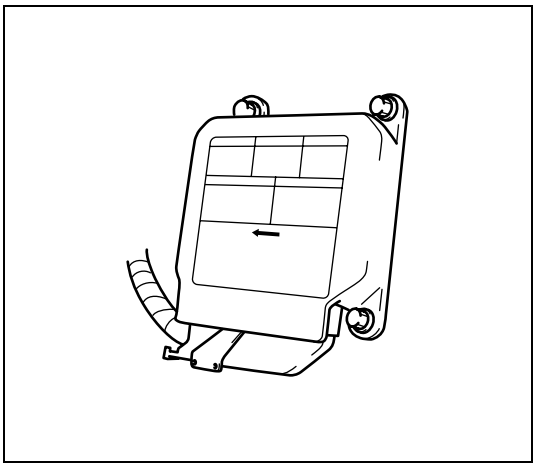

- SDM
  - Check for external damage such as deformation, scratch, crack, peeled paint, etc.
  - Check that SDM cannot be installed properly due to a cause in itself.
  - Check that connector or lead wire of SDM has a scorching, melting or damage.
  - Check SDM connector and terminals for tightness.
  - Check SDM sets a diagnostic trouble code (Refer to “Diagnostic Trouble Code (DTC) Check”.) and the diagnostic table leads to a malfunctioning SDM.

If any faulty condition is found in above checks, replace.

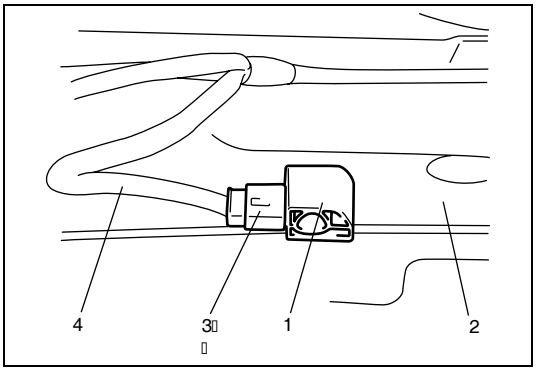

- Side sensors
  - Check sensor (1) and under body (2) for dents, cracks, deformation or rust.
  - Check sensor connector (sensor side and harness side) (3) or sensor lead wire (4) for damage, crack, scorching or melting.

If any faulty condition is found in above checks, replace.

- Instrument panel member and reinforcement
  - Check for any distortion, bending, cracking or other damage.

If any faulty condition is found in above checks, replace.

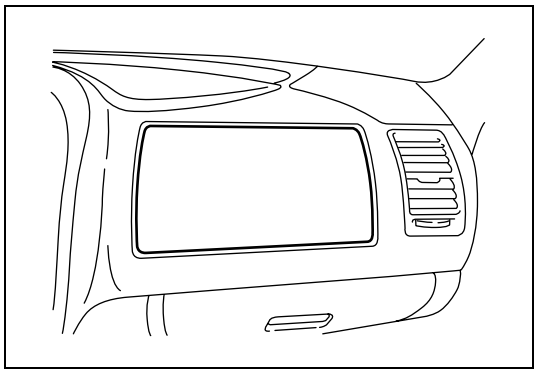

- Passenger air bag (inflator) module
  - Check for dents, cracks, damage or fitness.
  - Check trim cover for cracks or deformities.
  - Check harness and connector for damage or tightness.

If any faulty condition is found in above checks, replace.

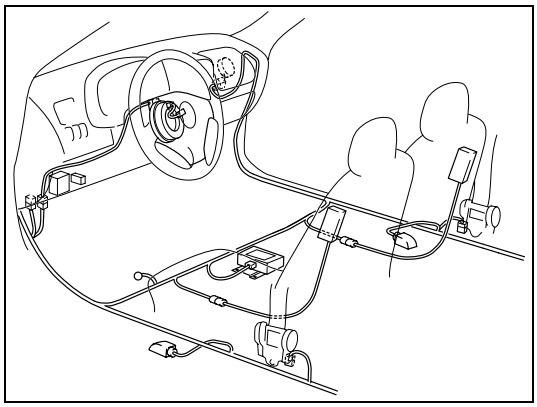

- Air bag wire harness and connections
  - Check for damages, deformities or poor connections. (Refer to “Intermittents and Poor Connections”.)
  - Check wire harness clamps for tightness.

If any faulty condition is found, correct or replace.

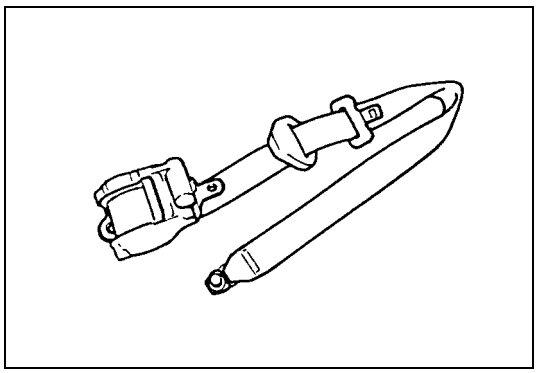

- Seat belt pretensioner
  - Check for dents, cracks, damage or fitness.
  - Check connector for damage or tightness.

If any faulty condition is found in above checks, replace.

- Seat belts and mounting points
  - Refer to “Front Seat Belt Inspection” in Section 10.
- “AIR BAG” warning lamp
  - After vehicle is completely repaired, perform “Air Bag Diagnostic System Check”.

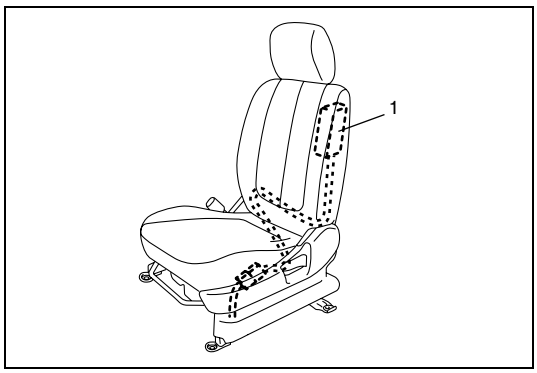

- Side air bag (inflator) module (1) (driver and passenger side)
  - Check front seat back for rent or damage.
  - Check wire harness and connector for damage or tightness.

If any faulty condition is found in above checks, replace front seat back.

SDM Removal and Installation

WARNING:

During service procedures, be very careful when handling a Sensing and Diagnostic Module (SDM).
Be sure to read "Service Precautions" before starting to work and observe every precaution during work. Neglecting them may result in personal injury or inactivation of the air bag system when necessary.

Removal

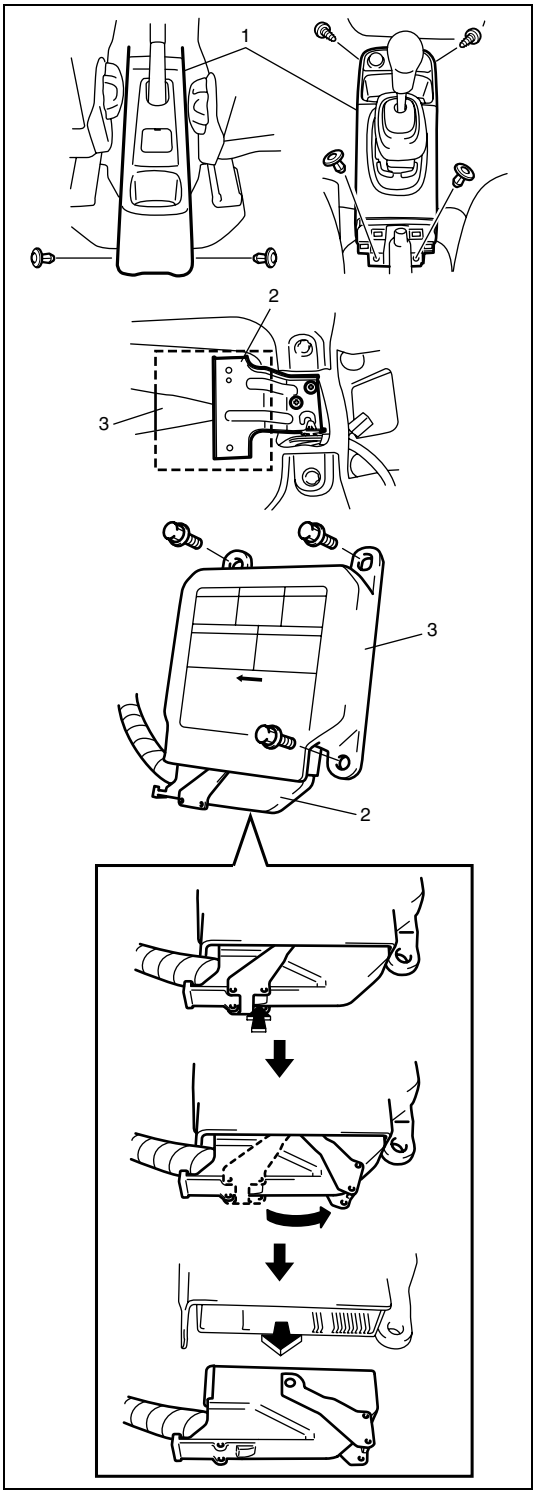

1) Disconnect negative cable at battery.
2) Disable air bag system. Refer to "Disabling air bag system" in this section.
3) Remove front and rear center console boxes (1) by removing screws and clips.
4) Remove front center console box mounting bracket (2).
5) Disconnect SDM connector (2) from SDM (3).
6) Remove SDM (3) from vehicle.

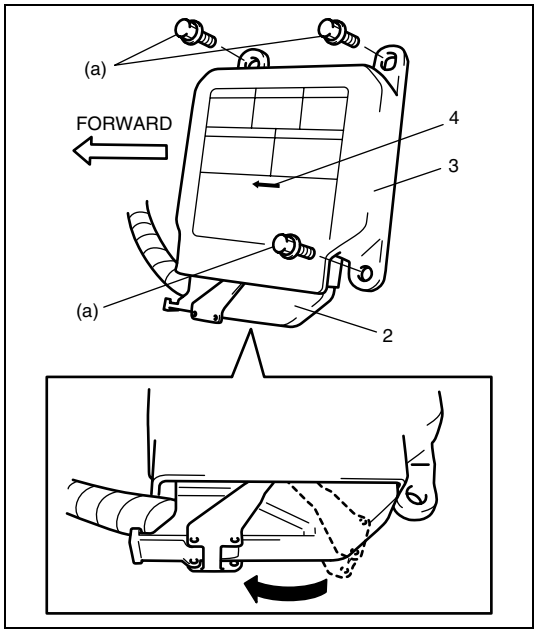

Installation

For installation, reverse removal procedure, nothing following points.

- Check none of the following conditions exists.
  - – Bend, scratch, deformity in vehicle body mounted on SDM.
  - – Foreign matters or rusts on mating surface of vehicle body mounted on SDM.
- Ensure that arrow (4) on the SDM (3) is pointing toward the front of the vehicle.
- Tighten SDM bolts to specified torque.

Tightening torque
SDM mounting bolt (a): 7 N·m (0.7 kg-m, 5.0 lb-ft)

- Connect SDM connector (2) to SDM (3) securely.
- Enable air bag system. Refer to “Enabling air bag system” in this section.

SDM Inspection

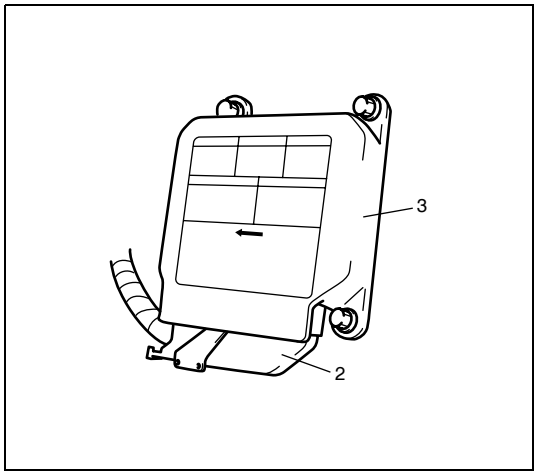

CAUTION:

- **Do not connect a tester whatever type it may be.**
- **Never repair or disassemble SDM (3).**
- **If SDM has been dropped, or if there are cracks, dents or other defects in the case or plate, replace it with a new one.**

- Check SDM (3) for dents, cracks or deformation.
- Check SDM connector (2) for damage, cracks or lock mechanism.
- Check SDM terminal for bent, corrosion or rust.

If any faulty condition is found in above checks, replace.

Side Sensor Removal and Installation

WARNING:

During service procedures, be very careful when handling a sensor.

- **Never strike or jar a sensor.**
- **Under some circumstance, it could cause improper operation of the air bag system. A sensor bolt must be carefully torqued to assure proper operation.**

Removal

1) Disconnect negative cable at battery.
2) Disable air bag system. Refer to “Disabling air bag system” in this section.
3) Remove center pillar lower trim and side sill scuff.
4) Turn up floor carpet at front seat side.

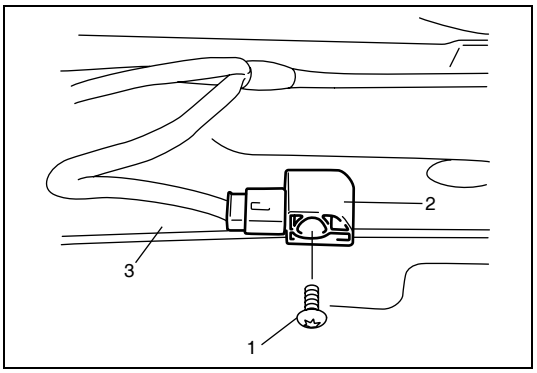

5) Remove side sensor bolt (1), and side sensor (2) from under body (3).

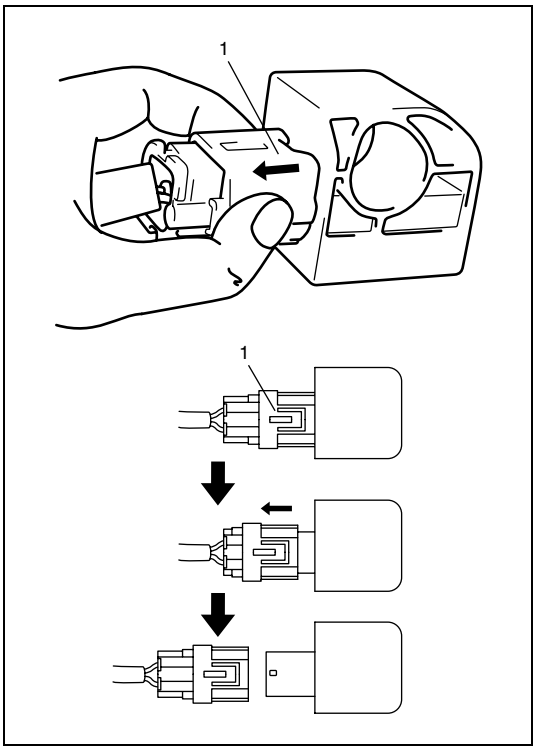

6) Disconnect side sensor connector sliding connector outer (1) as shown.

Installation

CAUTION:
Proper operation of side sensor requires sensor be rigidly attached to specified position.

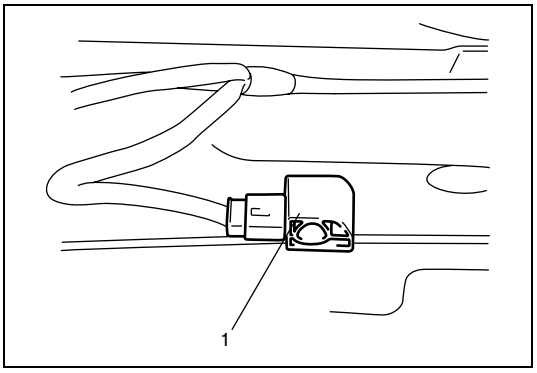

1) Check that none of following faulty conditions exists.
   - Bend, deformity or rust of under body.
   - Foreign matter on mating surface of sensor.
2) Install side sensor (1) on under body (2) and tighten side sensor bolt (3) to specified torque.

Tightening torque
Side sensor bolt (a): 9 N·m (0.9 kg-m, 6.5 lb-ft)

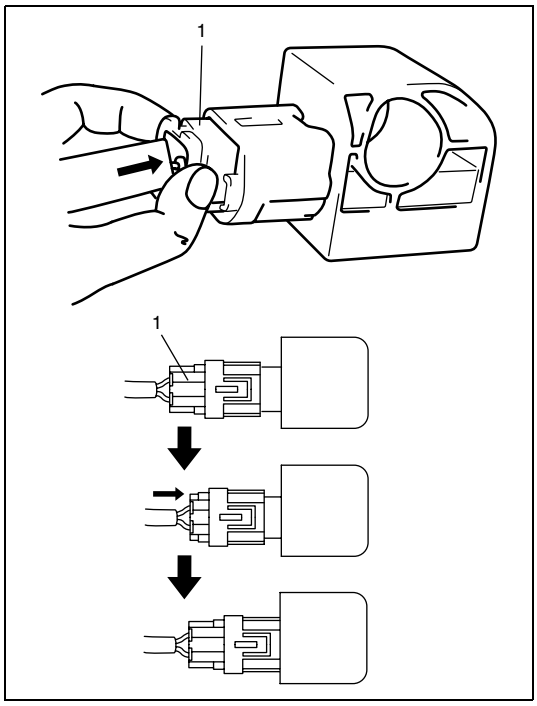

3) Connect side sensor connector pushing connector inner (1) as shown.

4) Connect negative cable at battery.
5) Enable air bag system. Refer to “Enabling air bag system” in this section.

Side Sensor Inspection

CAUTION:
- **Never disassemble side sensor.**
- **Sensor should be replaced when it was dropped from a height of 90 cm (3 ft) or more.**

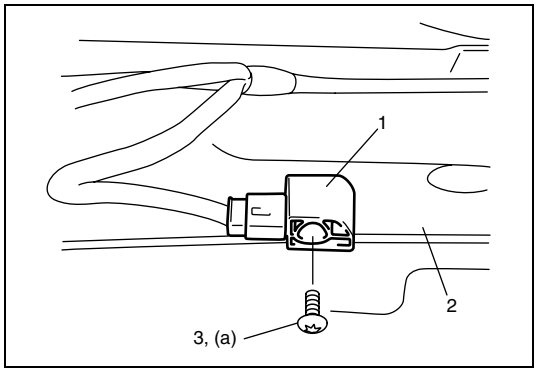

- Check sensor (1) for dents, crack, deformation.
- Check sensor connector (sensor side and harness side), lock mechanism or sensor lead wire for damage, crack, scorching or melting.
- Check connector terminals for bent, corrosion or rust.

If any faulty condition is found in above checks, replace.

Seat Belt Pretensioner Removal and Installation

Refer to “Front Seat Belt Removal and Installation” in Section 10.

Seat Belt Pretensioner Inspection

Refer to “Rear Seat Belt Inspection” in Section 10.

Passenger Air Bag (Inflator) Module Removal and Installation

WARNING:

- **Never attempt to disassemble or repair the passenger air bag (inflator) module. If any abnormality is found, be sure to replace it with new one as an assembly.**
- **Be sure to read "Service Precautions" before starting to work and observe every precaution during work. Neglecting them may result in personal injury or undeployment of the air bag when necessary.**

Removal

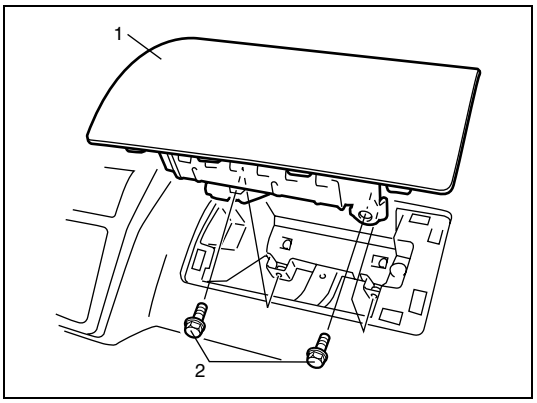

1) Disconnect negative cable at battery.
2) Disable air bag system. Refer to "Disabling air bag system" in this section.
3) Remove passenger air bag (inflator) module (1) attaching bolts (2) then remove passenger air bag (inflator) module (1) from instrument panel member.

Installation

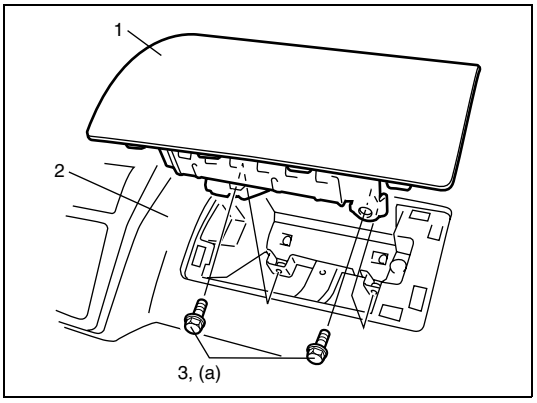

1) Install passenger air bag (inflator) module (1) to instrument panel (2).
2) Tighten passenger air bag (inflator) module attaching bolts (3) to specified torque.

Tightening torque
Passenger air bag (inflator) module mounting bolt
(a): 23 N·m (2.3 kg-m, 16.5 lb-ft)

3) Connect negative cable to battery.
4) Enable air bag system. Refer to "Enabling air bag system" in this section.

Passenger Air Bag (Inflator) Module Inspection

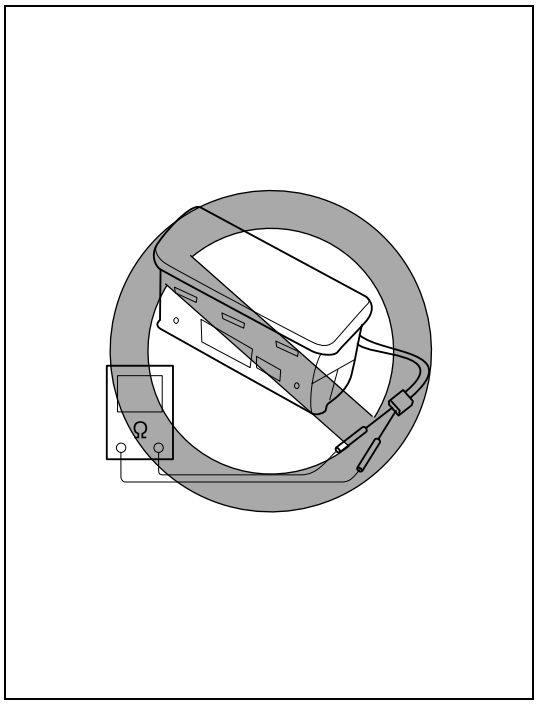

WARNING:

Never measure resistance of passenger air bag (inflator) module or disassemble it. Otherwise personal injury may result.

CAUTION:

If air bag (Inflator) module was dropped from a height or 90 cm (3 ft) or more, it should be replaced.

Check air bag (inflator) module appearance visually for following symptoms and if any one of them is applicable, replace with a new one.

- Air bag has deployed.
- There is a crack in trim cover (pad surface).
- Wire harness or connector is damaged.
- Air bag (inflator) module is damaged or a strong impact was applied to it.

Side Air Bag (Inflator) Module (If Equipped) Inspection

WARNING:

Be sure to read "Service Precautions" before starting to work and observe every precaution during work. Neglecting them may result in personal injury or undeployment of the air bag when necessary.

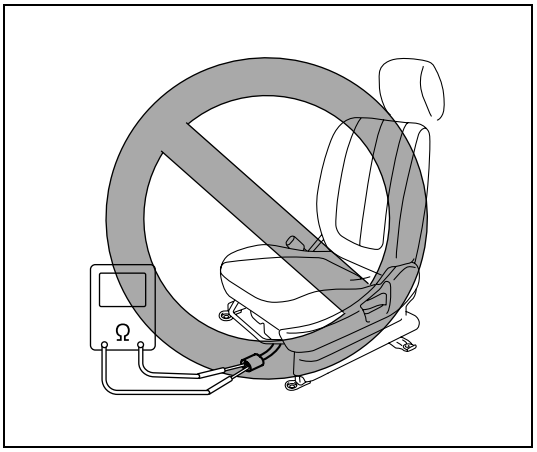

WARNING:

Never measure resistance of side air bag (inflator) module or disassemble it. Otherwise personal injury may result.

Check air bag (inflator) module appearance visually for following symptoms and if any one of them is applicable, replace with a new one.

- Air bag has deployed.
- There is a rent or damage in front seat back.
- Wire harness or connector is damaged or clamp for tightness.

Driver Air Bag (Inflator) Module Removal and Installation

Refer to "Driver Air Bag (Inflator) Module Removal and Installation" in Section 3C.

Driver Air Bag (Inflator) Module Inspection

Refer to "Driver Air Bag (Inflator) Module Inspection" in Section 3C.

Contact Coil Assembly

Refer to "Contact Coil Cable Assembly Removal and Installation" in Section 3C.

Contact Coil Assembly Inspection

Refer to "Contact Coil Cable Assembly Inspection" in Section 3C.

Air Bag (Inflator) Module and Seat Belt Pretensioner Disposal

WARNING:

Failure to follow proper air bag (inflator) module and seat belt pretensioner disposal procedures can result in air bag deployment and pretensioner activation which may cause personal injury.
Do not dispose of live (undeployed) air bag (inflator) modules and seat belt pretensioners. Because undeployed air bag (inflator) module/inactivated seat belt pretensioner must not be disposed of through normal refuse channels.
Undeployed air bag (inflator) module and inactivated seat belt pretensioner contain substances that can cause severe illness or personal injury if sealed container is damaged during disposal.

Air bag (inflator) module/seat belt pretensioner can be deployed/activated inside or outside of vehicle. Deployment/Activation method used depends upon final disposition of vehicle. Review the following instructions in order to determine which will work best in a given situation.

Deployment/Activation Outside of Vehicle:
When you intend to return the vehicle to service, deploy the air bag (inflator) module(s) or activate seat belt pretensioner(s) outside of the vehicle.

Deployment/Activation Inside of Vehicle:
When the vehicle will be destroyed, or salvaged for component parts, deploy the air bag modules and/or activate seat belt pretensioners installed on vehicle.

WARNING:

The following precautions must be observed for this work. Failure to observe any of them may result in personal injury.

- **Procedure should be followed strictly as described here.**
- **Be sure to read "Service Precautions" beforehand.**
- **To avoid accidental deployment/activation, this work should be performed by no more than one person.**
- **Since smoke is produced when air bag (inflator) module is deployed and pretensioner is activated, select well-ventilated area.**
- **Air bag (inflator) module and seat belt pretensioner will immediately deploy/activate when 12 volts vehicle battery is connected to it. Wear safety glasses throughout this entire deployment/activation and disposal procedure.**
- **Wear suitable ear protection when deploying air bag (inflator) module/activating seat belt pretensioner. Also, advise those who are in area close to deployment/activation site to wear suitable ear protection.**
- **Do not deploy/activate two or more air bag system components (air bag (inflator) modules and seat belt pretensioners) at the same time.**
- **Never connect deployment harness to any 12 volts vehicle battery before connecting deployment harness to air bag (inflator) module and seat belt pretensioner. Deployment harness shall remain shorted and not be connected to 12 volts vehicle battery till you are ready to deploy air bag (inflator) module or activate seat belt pretensioner.**

Deployment/Activation Outside of Vehicle

When you intend to return the vehicle to service, deploy the air bag (inflator) module(s) or activate seat belt pretensioner(s) outside of the vehicle.

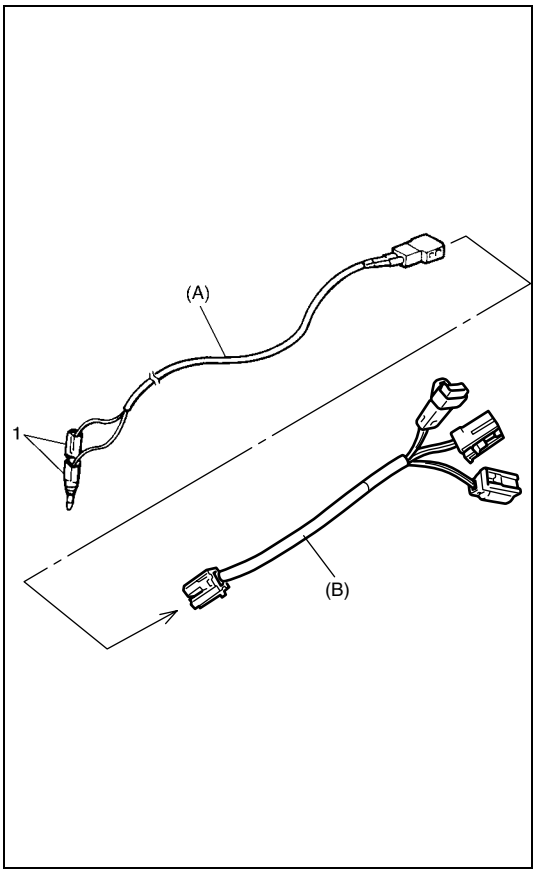

1) Turn ignition switch to "LOCK" position and remove key.
2) Wear safety glasses during this deployment/activation procedure.
3) Check that there is no open, short or damage in special tools (deployment harness (A) and adapter cable (B)). If any faulty is found, do not use it and be sure to use new deployment harness (A).

Special tool
(A): 09932-75030
(B): 09932-78331

NOTE:

If faulty of seat belt pretensioner connector of adapter cable (B) is found, replace it to spare connector (special tool).

4) Short two deployment harness leads (1) together by fully seating one banana plug into the other.

WARNING:

Deployment harness (A) shall remain shorted and not be connected to 12 volts vehicle battery till you are ready to deploy air bag module or activate seat belt pretensioner.

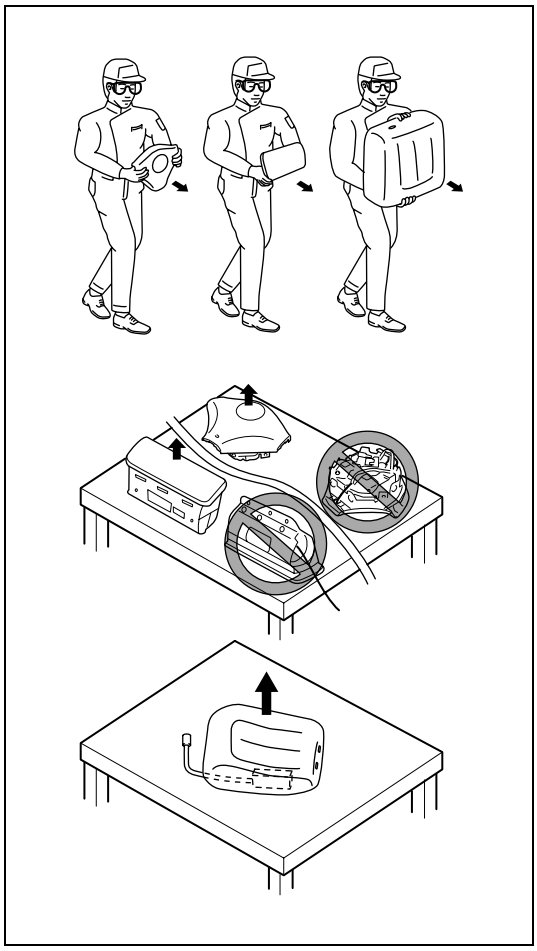

5) Remove air bag (inflator) module(s) or seat belt pretensioner(s) from vehicle referring to “Driver Air Bag (Inflator) Module Removal and Installation” in Section 3C, “Passenger Air Bag (Inflator) Module Removal and Installation” in this section, “Front Seat Belt Removal and Installation” in Section 10 and “Front Seat Removal and Installation” in Section 9.

WARNING:

- **For handing and storage of live air bag (inflator) module, select place where ambient temperature below 65°C (150°F), without high humidity and away from electric noise.**
- **Always carry live air bag (inflator) module with trim cover away from you.**
- **When storing live air bag (inflator) module or when leaving live air bag (inflator) module unattended on bench or other surface, always face trim cover up and away from surface. Front seat back with live air bag (inflator) module must be placed with its frontal seat cover facing up. This is necessary so that free space is provided to allow air bag (inflator) module to expand in the unlikely event of accidental deployment.**

Failure to follow procedures may result in personal injury.

WARNING:

- **For handling and storage of a live seat belt pretensioner, select a place where the ambient temperature below 65°C (150°F), without high humidity and away from electric noise.**
- **Never carry the seat belt pretensioner by webbing.**
- **When placing live seat belt pretensioner on workbench or other surface, be sure not to put something on seat belt pretensioner.**

Otherwise, personal injury may result.

6) Set air bag (inflator) module or seat belt pretensioner as follows.

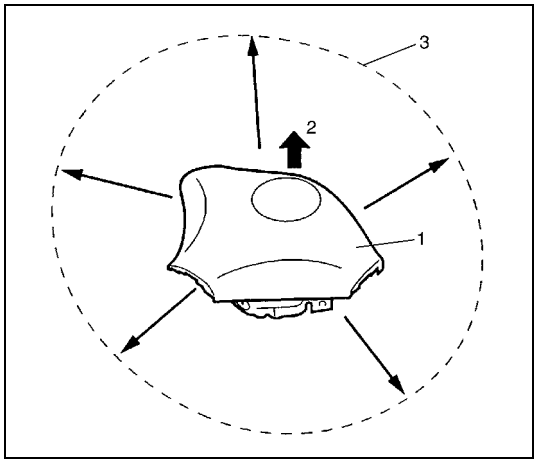

- For driver air bag (inflator) module
  i) Clear space (3) on ground about 185 cm (6 ft) in diameter where driver air bag (inflator) module (1) for deployment. Paved, outdoor location where there is no activity is preferred. If outdoor location is not available, space on shop floor where there is no activity and provide sufficient ventilation. Ensure no loose or flammable objects are within deployment area.
  ii) Place driver air bag (inflator) module (1) with its vinyl trim cover facing up (2) on ground in step i).

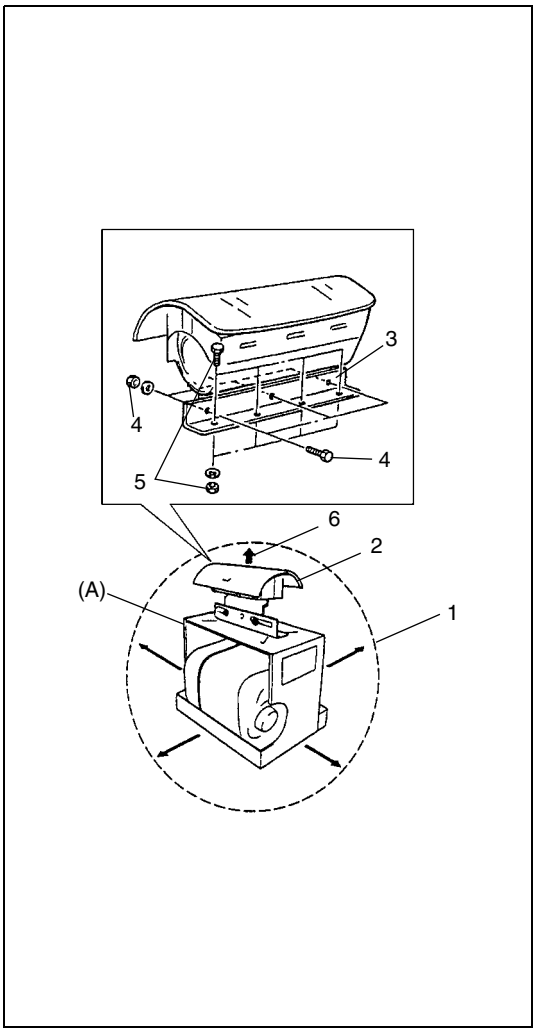

- For passenger air bag (inflator) module
  i) Clear space (1) on ground about 185 cm (6 ft) in diameter where passenger air bag (inflator) module for deployment. Paved, outdoor location where there is no activity is preferred. If outdoor location is not available, space on shop floor where there is no activity and provide sufficient ventilation. Ensure no loose or flammable objects are within deployment area.
  ii) Place deployment fixture (A) on ground in step i).

Special tool
(A): 09932-75041

  iii) Fill plastic reservoir in deployment fixture (A) with water or sand. This is necessary to provide sufficient stabilization of fixture during deployment.
  iv) Attach passenger air bag (inflator) module (2) in deployment fixture (A) using mounting attachment (3), hold-down bolts & nuts (4) and M8 bolts & nuts (5).

NOTE:

Make sure that deploying direction (6) faces as shown in figure against mounting attachment (3).

CAUTION:

Be sure to use M8 size and 7T strength bolts and nut (5) for fixing passenger air bag (inflator) module (2) to mounting attachment (3).

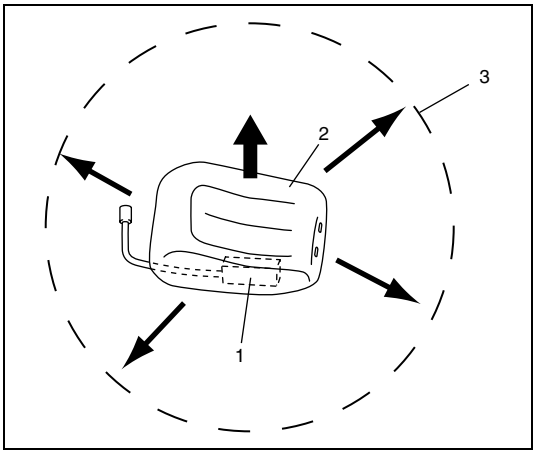

- For side air bag (inflator) module
  i) Clear space (3) on ground about 185 cm (6 ft) in diameter where side air bag (inflator) module (1) for deployment. Paved, outdoor location where there is no activity is preferred. If outdoor location is not available, space on shop floor where there is no activity and provide sufficient ventilation. Ensure no loose or flammable objects are within deployment area.
  ii) Place front seat back (2) with side air bag (inflator) module (1) with its frontal seat cover facing up on ground in step i).

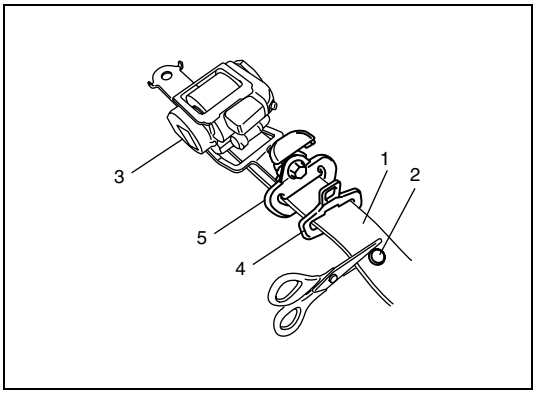

- For seat belt pretensioner
  i) Cut webbing (1) at tongue plate stopper (2) of seat belt pretensioner (3) side as shown.

NOTE:

Hold seat belt pretensioner (3) vertically in the same condition as it is installed. Otherwise, webbing can't be pulled out.

  ii) Remove tongue plate (4) and shoulder anchor (5) from webbing.

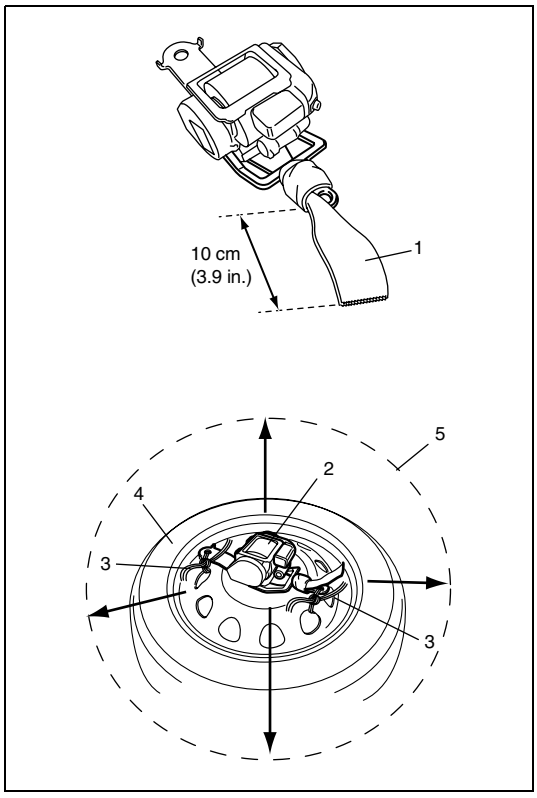

iii) Tie webbing (1) tightly at 10 cm (3.9 in.) from cutting edge as shown.
iv) Tie seat belt pretensioner (2) with wire harness (3) to wheel-installed tire (4) as shown.

Wire harness specification:

Stripped wire harness section 1.25 mm^2 (0.0019 in.^{2}) or more (Stripped wire harness diameter 1.25 mm (0.05 in.) or more)

NOTE:

Wind wire harness (3) around at least 3 times.

v) Clear space (5) on ground about 185 cm (6 ft) in diameter where seat belt pretensioner (2) is to be activated. Paved, outdoor location where there is no activity is preferred. If outdoor location is not available, space on shop floor where there is no activity and provide sufficient ventilation. Ensure no loose or flammable objects are within activation area.
vi) Place wheel-installed tire (4) with seat belt pretensioner (2) on ground in step v).

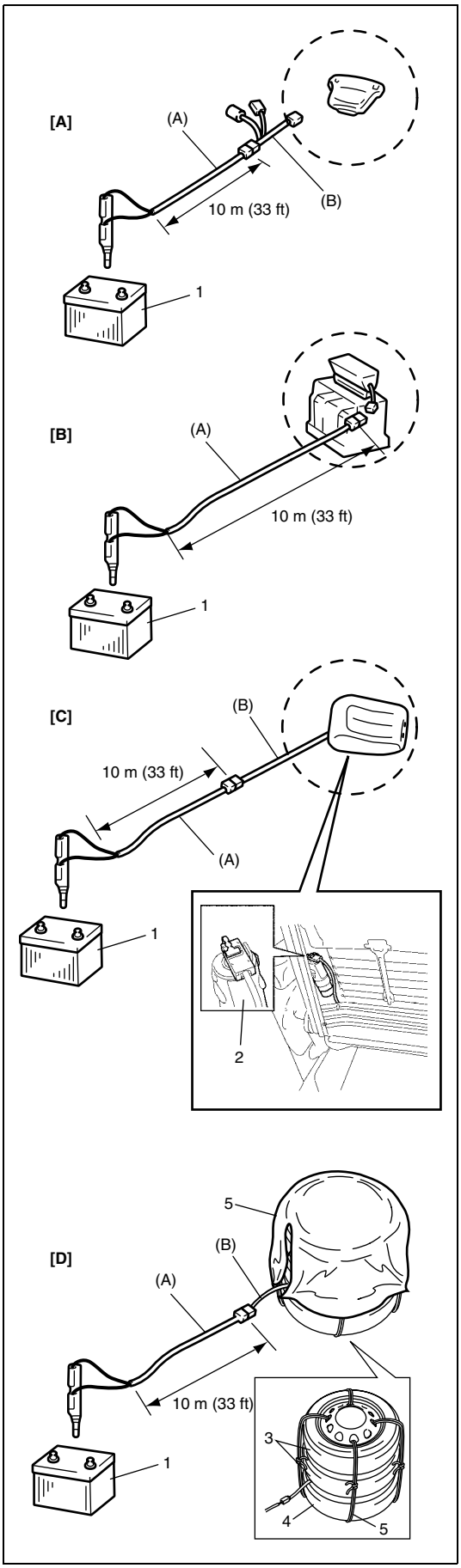

7) Stretch deployment harness (A) from air bag (inflator) module or seat belt pretensioner to its full length 10 m (33 ft).

Special tool
(A): 09932-75030

8) Place 12 volts vehicle battery (1) near shorted end of deployment harness (A).
9) Verify that area around air bag (inflator) module or seat belt pretensioner is clear of all people and loose or flammable objects.
10) Connect adapter cable (B) as follows.

Special tool
(B): 09932-78331

- For driver air bag (inflator) module:
  Verify that driver air bag (inflator) module is resting with its vinyl trim cover facing up, and connect adapter cable (B) to driver air bag (inflator) module.
- For passenger air bag (inflator) module:
  Verify that passenger air bag (inflator) module is firmly and properly secured on deployment fixture (special tool), and connect adapter cable (B) to passenger air bag (inflator) module.
- For side air bag (inflator) module:
  Verify that front seat back with side air bag (inflator) module (2) resting with its frontal seat cover facing up, and connect adapter cable (B) to side air bag (inflator) module.
- For seat belt pretensioner:
  Connect adapter cable (B) to seat belt pretensioner.

11) Connect adapter cable (B) to deployment harness (A) connector and lock connectors with lock slider.
12) For seat belt pretensioner
  a) Pile 2 wheel-installed tires (3) on top of tire with seat belt pretensioner (4), and tie them with wire harness (5) as shown.

Wire harness specification:

Stripped wire harness section 1.25 mm^2 (0.0019 $in.^2$) or more (Stripped wire harness diameter 1.25 mm (0.05 in.) or more)

NOTE:

Wind wire harness around at least 2 times.

  b) Drape blanket (6) over those tires.

[A]:	For driver air bag (inflator) module
[B]:	For passenger air bag (inflator) module
[C]:	For side air bag (inflator) module
[D]:	For seat belt pretensioner

13) Notify all people in immediate area that you intend to deploy/ activate air bag (inflator) module or seat belt pretensioner.

NOTE:

- **When air bag (inflator) module deploys and seat belt pretensioner activates, rapid gas expansion will create substantial report. Wear suitable ear protection. Notify all people in immediate area that you intend to deploy air bag (inflator) module or activate seat belt pretensioner and suitable ear protection should be worn.**
- **When driver air bag (inflator) module deploys, driver air bag (inflator) module may jump about 30 cm (1 ft) vertically. This is normal reaction to force of rapid gas expansion inside of drive air bag (inflator) module.**
- **After air bag (inflator) module has been deployed, surface of air bag (inflator) may contain powdery residue. This powder consists primarily of cornstarch (used to lubricate bag (inflator) as it inflates) and byproducts of chemical reaction.**

WARNING:

- **Do not place deployed air bag (inflator) module and activated seat belt pretensioner near any flammable objects.**
- **Do not apply water, oil, etc. to deployed air bag (inflator) module and activated seat belt pretensioner.**
- **Wait for about 30 minutes before touching any metal surface of air bag (inflater) module or seat belt pretensioner module. Disregarding these precautions may cause fire or personal injury.**

Failure to follow procedures may result in fire or personal injury.

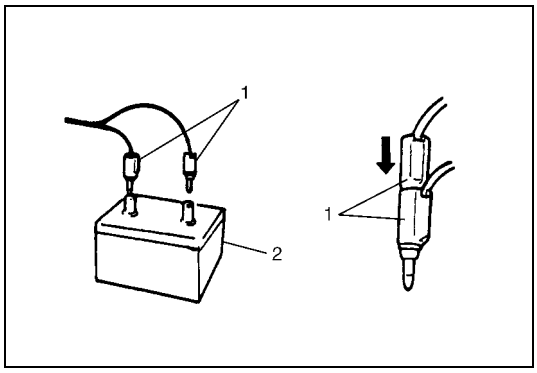

14) Separate two banana plugs (1) on deployment harness.
15) Connect deployment harness to 12 volts vehicle battery (2). This will immediately deploy or activate air bag (inflator) module or seat belt pretensioner.
16) Disconnect deployment harness from 12 volts vehicle battery (2) and short two deployment harness leads together by fully seating one banana plug into the other.

17) In the unlikely event that air bag (inflator) module or seat belt pretensioner did not deploy/activate after following these procedures, proceed immediately with Step 23) through 26). If air bag (inflator) module or seat belt pretensioner did deploy or activate, proceed with Steps 18) through 22).
18) Put on pair of shop gloves to protect your hands from possible irritation and heat when handling deployed air bag (inflator) module or activated seat belt pretensioner.
19) Disconnect adapter cable (special tool) from air bag (inflator) module or seat belt pretensioner as soon as possible. This will prevent adapter cable (special tool) from damage due to possible contact with hot air bag (inflator) module or hot seat belt pretensioner.
20) Check adapter cable connector as follows.
    - For air bag (inflator) module:
      Air bag (inflator) module connector of adapter cable (special tool) are designed to be reused. However they should be inspected for damage after deployment and replaced if necessary.
    - For seat belt pretensioner:
      Seat belt pretensioner connector of adapter cable (special tool) must be replaced to spare connector (special tool).

NOTE:

Do not reuse seat belt pretensioner connector of adapter cable (special tool) because it will be destroyed by shock when seat belt pretensioner is activated.

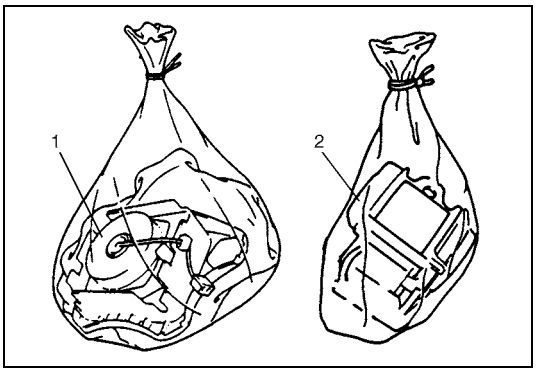

21) Dispose of deployed air bag (inflator) module (1) or activated seat belt pretensioner (2) through normal refuse channels after it has cooled for at least 30 minutes and tightly seal air bag (inflator) module (1) or seat belt pretensioner (2) in strong vinyl bag. (Refer to “Deployed Air Bag (Inflator) Module and Activated Seat Belt Pretensioner Disposal” in detail.)
22) Wash your hands with mild soap and water afterward.

NOTE:

Remaining steps are to be followed in the unlikely event that air bag (inflator) module did not deploy or seat belt pretensioner did not activate.

23) Ensure that deployment harness has been disconnected from 12 volts vehicle battery and that its two banana plugs have been shorted together by fully seating one banana plug into the other.
24) Disconnect deployment harness and adapter cable from air bag (inflator) module or seat belt pretensioner.

25) Temporarily store undeployed air bag (inflator) module or unactivated seat belt pretensioner referring to “Service Precautions” for details.
26) Contact your local distributor for further assistance.

Deployment/Activation Inside of Vehicle

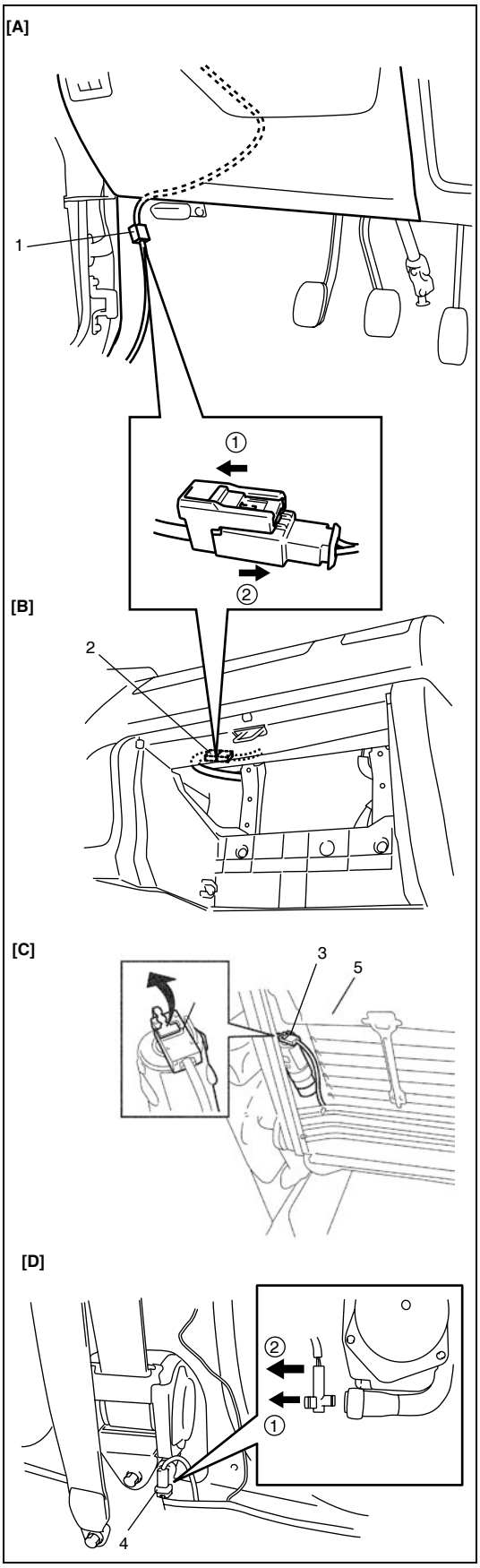

When the vehicle will be destroyed, or salvaged for component parts, deploy the air bag modules and/or activate seat belt pretensioners installed on vehicle.

1) Turn ignition switch to “LOCK” position, remove key and put on safety glasses.
2) Remove all loose objects from front seats and instrument panel.
3) Disconnect air bag (inflator) module or seat belt pretensioner connector as follows.
   - For driver air bag (inflator) module:
     Disconnect contact coil connector (1) located near base of steering column.
   - For passenger air bag (inflator) module:
     Remove glove box from instrument panel and disconnect passenger air bag (inflator) module connector (2).
   - For side air bag (inflator) module:
     To turn over driver and passenger side back trims (5) and disconnect side air bag (inflator) module connectors (3).
   - For seat belt pretensioner:
     Remove both side (driver and passenger side) center pillar lower trims and disconnect seat belt pretensioner connectors (4).
4) Confirm that each air bag (inflator) module and/or seat belt pretensioner is securely mounted.

[A]:	Driver air bag (inflator) module
[B]:	Passenger air bag (inflator) module
[C]:	Side air bag (inflator) module
[D]:	Seat belt pretensioner

[A]

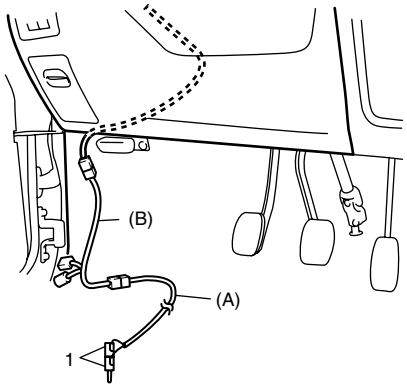

[B]

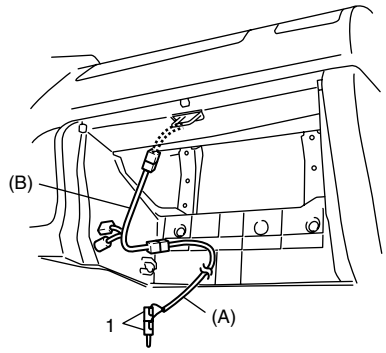

[C]

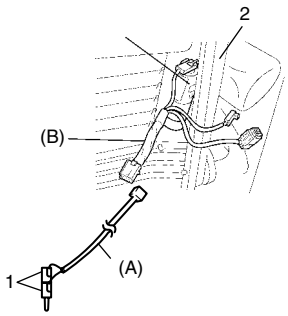

[D]

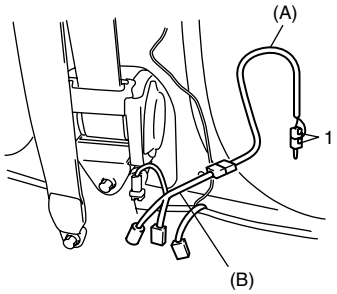

5) Check that there is no open, short or damage in special tools (deployment harness (A) and adapter cable (B)). If any faulty condition is found, do not use it and be sure to use new deployment harness (A) and/or adapter cable (B). And connect adapter cable (B) to deployment harness (A) and lock connectors with lock slider.

NOTE:

If faulty of seat belt pretensioner connector of adapter cable (B) is found, replace it to spare connector (special tool).

Special tool
(A): 09932-75030
(B): 09932-78331

6) Short two deployment harness leads (1) together by fully seating one banana plug into the other.

WARNING:

Deployment harness (A) shall remain shorted and not be connected to 12 volts vehicle battery until you are ready to deploy air bag (inflator) module or activate seat belt pretensioner.

7) Connect adapter cable (B) in series with deployment harness (A) to air bag (inflator) module or seat belt pretensioner as follows.
- For air bag (inflator) module:
  Connect adapter cable (B) in series with deployment harness (A) and push adapter cable (B) connector to air bag (inflator) module connector (driver, passenger or side of driver and passenger) till click can be heard.
- For side air bag (inflator) module:
  Connect adapter cable (B) deployment harness (A) and lock connector with lock lever.
- For seat belt pretensioner:
  Connect adapter cable (B) in series with deployment harness (A) to seat belt pretensioner and lock connector with lock part.

[A]:	For driver air bag (inflator) module
[B]:	For passenger air bag (inflator) module
[C]:	For side air bag (inflator) module
[D]:	For seat belt pretensioner
2.	Seat back assembly

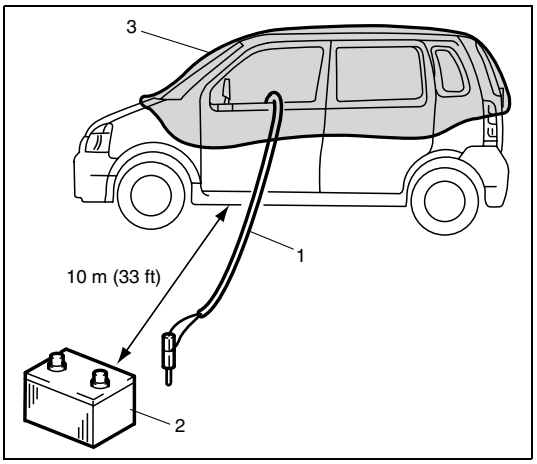

8) Route deployment harness (1) out of vehicle.
9) Verify that inside of vehicle and area surrounding vehicle are clear of all people and loose or flammable objects.
10) Stretch deployment harness (1) to its full length 10 m (33 ft).
11) Place 12 volts vehicle battery (2) near shorted end of deployment harness (1).
12) Completely cover windshield area and front door window openings with drop cloth, a blanket or any similar item (3). This reduces possibility of injury due to possible fragmentation of vehicle's glass or interior.
13) Notify all people in immediate area that you intend to deploy air bag (inflator) module or activate seat belt pretensioner.

NOTE:

- **When air bag (inflator) module deploys or seat belt pretensioner activates, rapid gas expansion will create substantial report. Wear suitable ear protection. Notify all people in immediate area that you intend to deploy air bag (inflator) module or to activate seat belt pretensioner and suitable ear protection should be worn.**
- **After air bag (inflator) module has been deployed, surface of air bag may contain powdery residue. This powder consists primarily of cornstarch (used to lubricate air bag (inflator) module as it inflates) and by-products of chemical reaction.**

WARNING:

- **Do not place deployed air bag (inflator) module and activated seat belt pretensioner near any flammable objects.**
- **Do not apply water, oil, etc. to deployed air bag (inflator) module and activated seat belt pretensioner.**
- **Wait for about 30 minutes before touching any metal surface of air bag (inflater) module or seat belt pretensioner module. Disregarding these precautions may cause fire or personal injury.**

Failure to follow procedures may result in fire or personal injury.

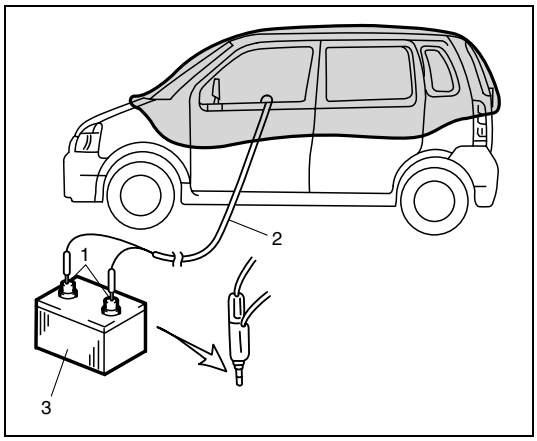

14) Separate two banana plugs (1) on deployment harness (2).
15) Connect deployment harness (2) to 12 volts vehicle battery (3). This will immediately deploy or activate air bag (inflator) module or seat belt pretensioner.
16) Disconnect deployment harness (2) from 12 volts vehicle battery (3) and short two deployment harness leads together by fully seating one banana plug into the other.
17) Repeat Steps 2) through 16) to deploy/activate air bag (inflator) modules and seat belt pretensioners which has not been deployed/activated, if any.
18) In the unlikely event that air bag (inflator) module and seat belt pretensioner after following these procedures, proceed immediately with Step 24) through 26). If air bag (inflator) module and seat belt pretensioner did deploy/activate, proceed with Steps 19) through 23).
19) Carefully remove drop cloth from vehicle and clean off any fragments or discard it entirely.
20) Put on pair of shop gloves to protect your hands from possible irritation and heat when handling deployed air bag (inflator) module and activated seat belt pretensioner.
21) Disconnect adapter cable (special tool) from air bag (inflator) module or seat belt pretensioner as soon as possible. This will prevent adapter cable (special tool) from damage due to possible contact with hot air bag (inflator) module or hot seat belt pretensioner.
22) Check adapter cable connector as follows.
    - For air bag (inflator) module:
      Air bag (inflator) module connector of adapter cable (special tool) are designed to be reused. However they should be inspected for damage after deployment and replaced if necessary.
    - For seat belt pretensioner:
      Seat belt pretensioner connector of adapter cable (special tool) must be replaced to spare connector (special tool).

    NOTE:

    Do not reuse seat belt pretensioner connector of adapter cable (special tool) because it will be destroyed by shock when seat belt pretensioner is activated.

23) With air bag (inflator) modules deployed and seat belt pretensioners activated, vehicle may be scrapped in the same manner as non-air bag system/seat belt pretensioner equipped vehicle.

NOTE:

Remaining steps are to be followed in the unlikely event that air bag (inflator) module did not deploy or seat belt pretensioner did not activate.

24) Remove undeployed air bag (inflator) module(s) and/or inactivated seat belt pretensioner(s) from vehicle. For driver air bag (inflator) module, refer to “Driver Air Bag (Inflator) Module Removal and Installation” in Section 3C. For passenger air bag (inflator) module, refer to “Passenger Air Bag (Inflator) Module Removal and Installation” in this section. For seat belt pretensioner, refer to “Front Seat Belt Removal and Installation” in Section 10.
25) Temporarily store undeployed air bag (inflator) module and/or unactivated seat belt pretensioner referring to “Service Precautions” for details.
26) Contact your local distributor for further assistance.

Deployed Air Bag (Inflator) Module and Activated Seat Belt Pretensioner Disposal

WARNING:

Failure to follow proper air bag (inflator) module and seat belt pretensioner disposal procedures can result in air bag deployment and pretensioner activation which may cause personal injury. Undeployed air bag (inflator) module and inactivated seat belt pretensioner must not be disposed of through normal refuse channels.

Undeployed air bag (inflator) module and inactivated seat belt pretensioner contains substances that can cause severe illness or personal injury if sealed container is damaged during disposal.

Deployed air bag (inflator) module and activated seat belt pretensioner can be disposed of through normal refuse channels just like any other parts. For their disposal, however, following points should be noted.

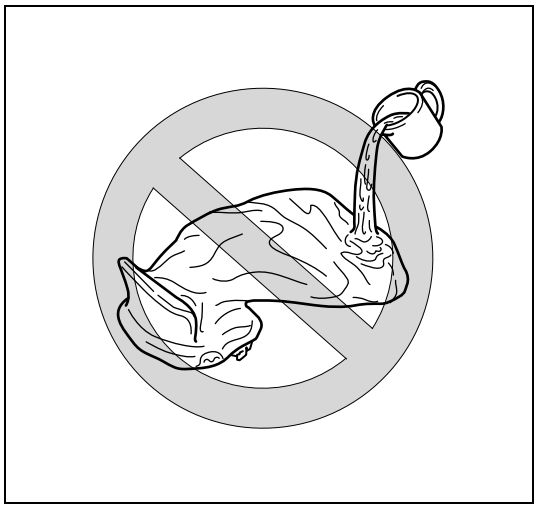

- Air bag (inflator) module and seat belt pretensioner immediately after deployment/activation is very hot. Wait for 30 minutes to cool it off before handling it.
- Never apply water, oil, etc. to deployed air bag (inflator) module and activated seat belt pretensioner to cool it off and be careful so that water, oil etc. does not get on deployed air bag (inflator) module and activated seat belt pretensioner.
- After air bag (inflator) module has been deployed, surface of air bag may contain a powdery residue. This powder consists primarily of cornstarch (used to lubricate air bag (inflator) module as it inflates) and by-products of chemical reaction. As with many service procedures, you should wear gloves and safety glasses.

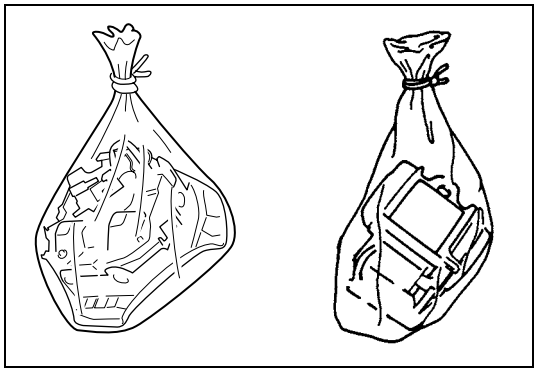

- When disposing of deployed air bag (inflator) module and activated seat belt pretensioner, be sure to seal it in a vinyl bag.
- When air bag (inflator) module and seat belt pretensioner have been deployed/activated inside of vehicle which is going to be scrapped, leave them as installed to vehicle.
- Be sure to wash your hands with mild soap and water after handling it.

Tightening Torque Specification

Fastening part	Tightening torque		
	N•m	kg-m	lb-ft
SDM mounting bolt	7	0.7	5.0
Passenger air bag (inflator) module bolt	23	2.3	16.5
Side sensor bolt	9	0.9	6.5

Special Tool

<table>
<tr>
<td> 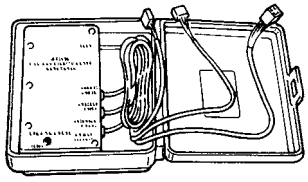
09932-75010
Air bag driver/passenger load tool</td>
<td> 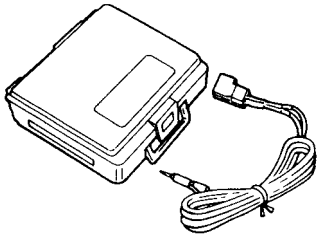
09932-75030
Air bag deployment harness</td>
<td> 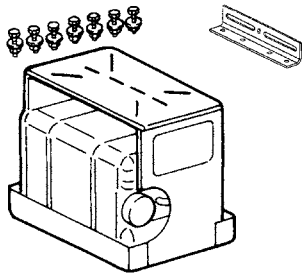
09932-75041
Passenger air bag (inflator) module deployment fixture</td>
<td> 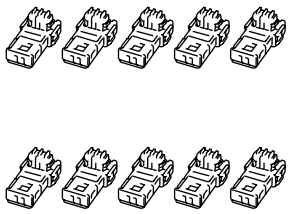
09932-75410
Spare connector
(See NOTE "C".)</td>
</tr>
<tr>
<td> 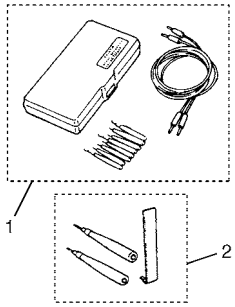
09932-76010
Connector test adapter set (See NOTE "D".)</td>
<td> 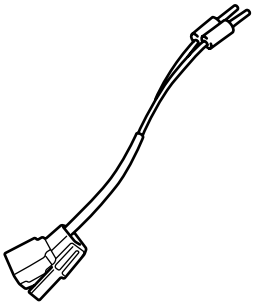
09932-78310
Adapter cable</td>
<td> 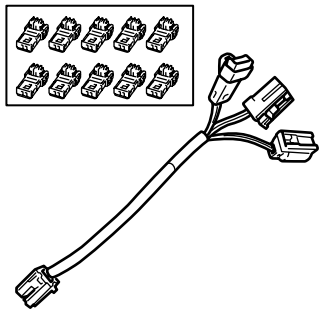
09932-78331
Adapter cable</td>
<td> 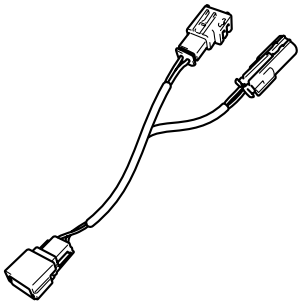
09932-78340
Adapter cable</td>
</tr>
<tr>
<td> 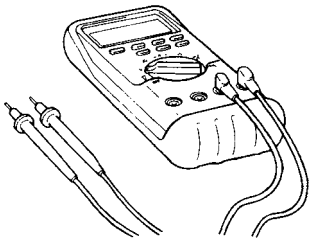
Digital multimeter
(See NOTE "A" and WARNING.)</td>
<td> 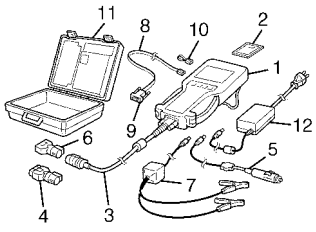
Tech 2 kit (Suzuki Scan Tool)
(See NOTE "B".)</td>
<td></td>
<td></td>
</tr>
</table>

WARNING:

Be sure to use the specified digital multimeter. Otherwise, air bag (inflator) module deployment or personal injury may result.

NOTE:

- **"A": Digital multimeter specification: Maximum test current is 10 mA or less at minimum range of resistance measurement.**
- **"B": This kit includes the following items.**
  1. Tech 2, 2. PCMCIA card, 3. DLC cable, 4. SAE 16/19 adapter, 5. Cigarette cable, 6. DLC loopback adapter, 7. Battery power cable, 8. RS232 cable, 9. RS232 adapter, 10. RS232 loopback connector, 11. Storage case, 12. Power supply
- **"C": These connectors are spares for adapter cable (09932-78331).**
- **"D": This set includes the following items.**
  1. Connector test adapter kit (09932-75020), 2. Connector test adapter & shorting bar release tool (09932-76020)

Prepared by
MAGYAR SUZUKI CORPORATION

1st Ed. October, 2003

1210